AGENDA
BRADENTON PLANNING COMMISSION MEETING
2:00 p.m. Wednesday, April 16, 2025
101 OLD MAIN STREET, BRADENTON, FL 34205

1. MEETING CALLED TO ORDER

2. PLEDGE OF ALLEGIANCE

3. INTRODUCTION OF NEW COMMISSION MEMBER

a) Planning & Community Development: Introduction of new Commission member Jason B. "J.B." Taylor.

4. ROLL CALL

5. APPROVAL OF MEETING MINUTES

a) Planning & Community Development: Planning Commission meeting minutes from February 19, 2025.
Meeting Minutes from February 19, 2025 (DRAFT).pdf

6. PUBLIC COMMENTS

Anyone wishing to address the Planning Commission on any non-agenda item should complete a comment slip and submit it to the Clerk.

7. AGENDA ITEMS

a) Planning & Community Development: **Resolution 25-41, Case PLN-SUP-24-0008:**

Request for a Special Use Permit to allow for a sidewalk café with alcoholic beverage sales; to be located at 450 12th Street West (Parcel ID 3318700006) in the T5 (Urban Center) transect zoning district. Application filed by Paul Kotlarczyk (owner).
Resolution 25-41 (DRAFT).pdf
Application.pdf
Staff Report.pdf

b) Planning & Community Development: **Resolution 25-40, Case PLN-SUP-25-0004:**

Request for a Special Use Permit to allow for a sidewalk café with alcoholic beverage sales; to be located at 1166 3rd Avenue West (Parcel ID 3294300003) in the T6 (Urban Core) transect zoning district. Application filed by Melissa Lilly (agent) for the City of Bradenton (owner).
Resolution 25-40 (DRAFT).pdf
Application.pdf
Staff Report.pdf

c) Planning & Community Development: **Final Order PLN-FBA-25-0002, Case PLN-FBA-25-0002:**

Request for a Form Based Code Adjustment to allow for an additional wall sign to be located on the west façade; for property located at 1111 3rd Avenue West (Parcel ID 3294701009) in the T5 (Urban Center) transect zoning district. Application filed by Amanda Norman and Nicholas St. John (agents) for River View Complex, LLC (owner).
Final Order: PLN-FBA-25-0002.pdf
Application.pdf
Staff Report.pdf

d) Planning & Community Development: **Final Order PLN-FBA-25-0003, Case PLN-FBA-25-0003:**

Request for a Form Based Code Adjustment to permit a 74 square foot wall sign on the west façade, superseding a previous approval of a 60 square foot wall sign on this façade, located at 1001 3rd Avenue West, Bradenton, FL 34205, Parcel ID: 3291400004. Request filed by Caylee Grimes, agent for 3rd Avenue Associates, LLLP.
Final Order PLN-FBA-25-0003.pdf
Application.pdf
Staff Report.pdf

e) Planning & Community Development: **Resolution 25-39, Case PLN-SUP-24-0006:**

Request for a Special Use Permit to allow for a Group Care Facility at 2726 6th Avenue West. The applicant has indicated that the facility would be licensed as a Standard License ALF Following ACHA physical plant regulations and all other Standard ALF regulations of section 464.4.3.1. Application filed by Brian Lichterman, agent for Amanda Hubbard (contract purchaser).
Resolution 25-39 (Draft).pdf
Application.pdf
Staff Report.pdf

f) Planning & Community Development: **Resolution 25-38, Case PLN-SUP-25-0007**:

Request for a Special Use Permit to allow for a Club (Reception Center); to be located at 1710 Manatee Avenue East (Parcel ID 1270500000) in the T4-O (General Urban Open) transect zoning district. Application filed by Niketa Jackson (owner).

Resolution 25-38 (DRAFT).pdf
Application.pdf
Staff Report.pdf

g) Planning & Community Development: **Ordinance 4059, Case PLN-TXT-25-0001**:

An Ordinance of the City of Bradenton, Florida, amending the City of Bradenton's Land Use Regulations, Chapter 3, District Regulations, Section 3.2, standard Land Use Atlas District regulations, Schedule 3.2.1.2 Permitted and Special Uses Mixed-Use and Non-Residential Land Use Atlas Districts, to add docks and piers as a permitted use in the Urban Village Zoning District; providing for codification; providing for repeal of ordinances in conflict; providing for severability; and providing for an effective date. Application filed by the City of Bradenton Department of Planning and Community Development.
Ordinance 4059 (DRAFT).pdf
Application.pdf
Staff Report.pdf

8. DISCUSSION ITEMS

9. DIRECTOR'S REPORT

10. ANNOUNCEMENT OF CITY COUNCIL PUBLIC HEARING DATES

a) Planning & Community Development: February 26, 2025:

- Resolution 25-25 - Special Use Permit for a Medical Clinic at 509 9th Street East (approved with stipulations, vote 5-0)

March 12, 2025:

- Resolution 25-24 - Special Use Permit for a Sidewalk Cafe with Alcoholic Beverages at 316 12th Street West (approved with stipulations, vote 5-0).

March 26, 2025:

- No Planning Commission related items on the agenda.

April 9, 2025:

- No Planning Commission related items on the agenda.

April 23, 2025:

- Currently no Planning Commission related items on the agenda.

May 14, 2025: Items from the April 16, 2025, Planning Commission meeting.

- Resolution 25-41 - Special Use Permit for a Sidewalk Cafe with Alcoholic Beverages at 450 12th Street West
- Resolution 25-40 - Special Use Permit for a Sidewalk Cafe with Alcoholic Beverages at 1166 3rd Avenue West
- Resolution 25-39 - Special Use Permit for a Nursing Home at 2726 6th Avenue West
- Resolution 25-38 - Special Use Permit for a Club (Event Center) at 1710 Manatee Avenue East
- Ordinance 4059 - Land Use Regulations Text Amendment to permit docks in the UV zoning district (1st Reading)

11. ADJOURN

All interested persons and parties may appear either in person and be heard or submit written comments regarding the above matter to the Planning and Community Development Director and they will be heard and considered. The hearing may be continued from time to time as necessary. Copies of the application or further information may be obtained from the Department of Planning and Community Development, 101 Old Main Street, Bradenton, Florida, 34205, or by calling (941) 932-9407.

NON-DISCRIMINATION STATEMENT:

The City of Bradenton prohibits discrimination in all of its services, programs or activities on the basis of race, color, age, disability, sex, national origin, religion, genetic information or marital status. Persons with a disability needing a reasonable accommodation to participate in, or who require assistance or an alternative means for communication of program information such as Braille, large print, etc., should contact as soon as possible, but at least 48 hours in advance:

City of Bradenton ADA/Title VI Coordinator
101 Old Main Street
Bradenton, FL 34205
ADACoordinator@cityofbradenton.com
941-932-9400
TTY: 7-1-1 or 1-800-955-8771

La ciudad de Bradenton proveera servicio de interprete a las personas quienes su primer lenguage no es el ingles. Si necesita estos servicios, usted o su representante puede comunicar al ADA/Title VI Coordinator, 101 Old Main Street, Bradenton, FL 34205. Tambien puede llamar al (941) 932-9470 o enviar correo electronico a ADACoordinator@cityofbradenton.com

AGENDA ITEM NO. 3.a

Item Cover Page

PLANNING COMMISSION MEETING AGENDA ITEM REPORT

DATE: April 16, 2025

SUBMITTED BY: Greg DeLong, Planning & Community Development

ITEM TYPE: Miscellaneous

AGENDA SECTION: INTRODUCTION OF NEW COMMISSION MEMBER

SUBJECT: Introduction of new Commission member Jason B. "J.B." Taylor.

SUGGESTED ACTION:

Is this item Quasi-Judicial?
No

Does this item require a public hearing?
No

EXPLANATION:
Mr. Taylor is filling the seat once occupied by Richard Bedford, with a term expiration of April 2027.

ATTACHMENTS:

AGENDA ITEM NO. 5.a

Item Cover Page

PLANNING COMMISSION MEETING AGENDA ITEM REPORT

DATE: April 16, 2025

SUBMITTED BY: Greg DeLong, Planning & Community Development

ITEM TYPE: Minutes

AGENDA SECTION: **APPROVAL OF MEETING MINUTES**

SUBJECT: Planning Commission meeting minutes from February 19, 2025.

SUGGESTED ACTION: Approve as submitted.

Is this item Quasi-Judicial?
No

Does this item require a public hearing?
Yes

EXPLANATION:
Review and approval of the meeting minutes from the February 19, 2025, City of Bradenton Planning Commission meeting.

FINANCIAL IMPACT:
N/A

ATTORNEY REVIEW/RECOMMENDATION:
N/A

SUGGESTED MOTION:
Motion to approve the Planning Commission meeting minutes from February 19, 2025, as submitted.

ATTACHMENTS:
Meeting Minutes from February 19, 2025 (DRAFT).pdf

ABBREVIATED MINUTES
PLANNING COMMISSION MEETING
February 19, 2025

The Planning Commission met in the City of Bradenton Council Chambers, 101 Old Main Street, Bradenton, Florida at 2:00 p.m.

PRESENT

Planning Commission Members: Ben Bakker-Chair, Michael Jones, Richard Whetstone, Keith Green-Alternate.
City Staff: Scott Rudacille-City Attorney, Robin Singer-Planning and Community Development Director, Greg DeLong-Planning and Community Development Assistant Director, Jamie Schindewolf-City Planner, Lori Brunner-Planning and Community Development Administrative Assistant.

REGULAR MEETING

1. Meeting was called to order by the Planning Commission Chair, Ben Bakker at 2:02 p.m.
2. Pledge of Allegiance.
3. Motion to approve the January 15, 2025, Meeting Minutes by Commissioner Green, and seconded by Commissioner Whetstone. Motion passed unanimously.

PUBLIC COMMENT

No speakers came forward to speak on non-agenda items.

ELECTION OF OFFICERS

1. Election of Chairperson. Motion from Commissioner Green to nominate Ben Bakker. Seconded by Commissioner Whetstone. Motion passed unanimously.
2. Election of Vice-Chairperson. Motion from Commissioner Green to nominate himself, Keith Green. Seconded by Commissioner Jones. Motion passed unanimously.

REVIEW OF BYLAWS

Greg DeLong stated that the only change was an update to Article 5 of the Planning Commission Bylaws.
Motion for approval by Commissioner Green. Seconded by Commissioner Whetstone. Motion passed unanimously.

Chair Ben Bakker asked if the Commissioners had any ex parte communication with any of the applications on today's agenda. There were none.

AGENDA ITEMS:

1. Resolution 25-24, Case PLN-SUP-24-0007:
Request for a Special Use Permit to allow for a sidewalk café with alcoholic beverage sales; to be located at 316 12th Street West (Parcel ID 3295600005) in the T5 (Urban Center) transect zoning district.

DRAFT

Application filed by Joshua Hatch (agent) for Landmark 1896, LLC (owner).

Staff: Greg DeLong summarized the case and stated that this is a brand-new application.

Applicant: Joshua Hatch, 11153 Fieldstone Drive, Palmetto, FL, is requesting outside seating available to them. He stated that they have storage for weather events.

Mr. DeLong went over the Form Based Code regulations; this use type is permitted, however, what makes this a special use permit requirement is the request to serve alcohol. He also went over the design elements and the requirements of the Comprehensive Plan.

Public Comment: Chair Bakker opened the Public Hearing.
No one came forward in favor or in opposition.

Public Hearing was closed.

Motion: Commissioner Green motioned to approve, and Commissioner Whetstone seconded. Motion passed unanimously.

2. Final Order PLN-VAR-25-0001, Case PLN-VAR-25-0001:
Request for Variance approval to allow for a 6-ft. high fence to be located between the primary structure and the right-of-way in a secondary front yard; for property located at 1801 Everson Street (Parcel ID 1383502509) in the R-1 (Low Density-Single Family) zoning district. Application filed by Joshua Mazrin (owner).

Staff: Greg DeLong presented the case and discussed the zoning. He stated that the current Land Use Regulations do not allow a 6-foot fence in the proposed area.

Applicant: Joshua Mazrin, 1801 Everson Street, Bradenton, went over his case and stated that he has been working with his fence contractor, who did not secure a permit for the fence. He is now trying to solve this issue. He showed pictures and discussed why he would like this variance the way he is requesting.

Mr. DeLong explained the difference between a 6-foot fence and a 4-foot fence in that area, which is a zoning issue. He went over the Comprehensive Plan regulations and the Land Use Regulations, as well as the variance criteria.

Public Comment: Chair Bakker opened the Public Hearing.
No one came forward in favor or in opposition.

Public Hearing was closed.

DRAFT

Motion: Commissioner Whetstone motioned to approve, and Commissioner Green seconded. Motion passed unanimously.

3. Resolution 25-25, Case PLN-25-SUP-0001:
Request for a Special Use Permit to allow for a medical clinic; to be located at 509 9th Street East (Parcel ID 3226700159) in the T5 (Urban Center) transect zoning district. Application filed by Chris McKenna of Manatee Central, LLC (owner).

Staff: Jamie Schindewolf presented the case information. She went over the Special Use request standards and the required criteria. She then stated that staff believes that this use meets the criteria for special use approval.

Applicant: Not present.

Public Comment: Chair Bakker opened the Public Hearing.
No one came forward in favor or in opposition.

Public Hearing was closed.

Motion: Commissioner Greene motioned to approve, and Commissioner Jones seconded. Motion passed unanimously.

DISCUSSION ITEMS:
Mr. DeLong introduced the new City Planner, Brandon Wink. Mr. Wink gave a brief introduction of himself.

DIRECTOR'S REPORT:
Robin Singer stated that City Council passed the Westminster ordinances to move forward to the state for the text amendment; it will take about 45 days to return to the Council for a second reading along with the other ordinances that accompany it.

Mr. DeLong went over other cases that will be going to the City Council. All were in the Commissioner's packet.

Adjournment: The meeting adjourned at 2:46 p.m.

Ben Bakker, Chair Date

NOTE: This is not a verbatim record. An audio recording of the meeting is available for a fee upon request.

DRAFT

AGENDA ITEM NO. 7.a

Item Cover Page

PLANNING COMMISSION MEETING AGENDA ITEM REPORT

DATE: April 16, 2025

SUBMITTED BY: Greg DeLong, Planning & Community Development

ITEM TYPE: Resolution

AGENDA SECTION: **AGENDA ITEMS**

SUBJECT: **Resolution 25-41, Case PLN-SUP-24-0008:**

Request for a Special Use Permit to allow for a sidewalk café with alcoholic beverage sales; to be located at 450 12th Street West (Parcel ID 3318700006) in the T5 (Urban Center) transect zoning district. Application filed by Paul Kotlarczyk (owner).

SUGGESTED ACTION: Motion to recommend to City Council either approval or denial of Resolution 25-41, Case PLN-SUP-24-0008.

If the action is to approve, the following are recommended stipulations for approval:

a. The approved Resolution, including the approved site plan and conditions shall be on display and accessible on the Property during business hours.
b. Within 30 days following the approval, the Property Owner shall execute an Indemnification Agreement in a form acceptable to the City.
c. No more than 2 tables may remain on the sidewalk when the business is closed. The tables shall be placed adjacent to the building unit and locked with a cable lock.
d. Clear pedestrian access on the public sidewalk of no less than 5’ shall be maintained at all times in a way that neither seating nor tables affect the ingress/egress of travel, the safety or pedestrian and traffic circulation.
e. The property/business owner shall obtain all State

licenses permitting the sale of alcohol as part of the sidewalk café.

f. Any cleaning solution used to clean the sidewalk café area shall be approved by the Bradenton Public Works.
g. Any future increase in seating for the sidewalk café area shall be approved by City Council.

Is this item Quasi-Judicial?
Yes

Does this item require a public hearing?
Yes

EXPLANATION:
The applicant has submitted a Special Use Permit application requesting permission to allow a sidewalk cafe with alcoholic beverages at 450 12th Street West.

While a sidewalk cafe has been in place at the subject property, the subject Special Use Permit will ensure compliance to the City of Bradenton's Form Based Code and Land Use Regulations, should approval be granted by City Council.

FINANCIAL IMPACT:
N/A

ATTORNEY REVIEW/RECOMMENDATION:
Reviewed by City Attorney Rudacille.

SUGGESTED MOTION:
Motion to recommend either approval or denial of Resolution 25-41 with stipulations recommended by staff.

ATTACHMENTS:
Resolution 25-41 (DRAFT).pdf
Application.pdf
Staff Report.pdf

RESOLUTION 25-41

A RESOLUTION OF THE CITY COUNCIL OF THE CITY OF BRADENTON, FLORIDA, GRANTING SPECIAL USE PERMIT NO. PLN-SUP-24-0008 TO PERMIT A SIDEWALK CAFÉ WITH ALCOHOLIC BEVERAGE SALES FOR PROPERTY LOCATED AT 450 12TH STREET WEST, BRADENTON, FLORIDA (PARCEL ID NO 3318700006), IN THE T5 URBAN CENTER TRANSECT ZONING DISTRICT; PROVIDING FOR SEVERABILITY; AND PROVIDING FOR AN EFFECTIVE DATE.

WHEREAS, Whiskey Business, LLC (the "Property Owner" or "Applicant") owns the property located at 450 12th Street West, Bradenton, Florida (Parcel ID No 3318700006), more particularly described in Exhibit "A" (the "Property"), and

WHEREAS, the City of Bradenton Comprehensive Plan's Future Land Use Map designates the Property as Urban Core (URBCORE); and

WHEREAS, the City of Bradenton Official Zoning Map classifies the Property under the (T5) Urban Center – Transect Zoning District; and

WHEREAS, the City of Bradenton Form Based Code, Table 4.7, identifies uses in the T5 transect zoning district; and

WHEREAS, the City of Bradenton Form Based Code, Table 4.7, identifies Café/Sidewalk Café with less than 20 seats as a permitted use in the T5 transect zoning district; but stipulates that City Council approval may be required per the Land Use Regulations; and

WHEREAS, the City of Bradenton Land Use Regulations, Section 4.3.11.4, states that alcoholic beverage sales served as part of any sidewalk café on public property shall require City Council approval; and

WHEREAS, the Property Owner submitted an application for a Special Use Permit to permit a sidewalk café with alcoholic sales; and

WHEREAS, the Planning Commission held a noticed public hearing on April 16, 2025, at which the Commission received testimony and evidence from the applicant and City Planning staff; and

WHEREAS, the City Council held a noticed public hearing on May 14, 2025, at which the Council received testimony and evidence from City Planning staff and members of the public in attendance.

NOW, THEREFORE, the City Council makes the following Findings of Fact and Conclusions of Law and issues the Final Order as follows:

Section 1. Findings of Fact and Conclusions of Law. After considering the evidence on the record and that presented at public hearing, including the staff report and the recommendation of the Planning Commission, the City Council hereby makes the following Findings of Fact and Conclusions of Law:

a. The Whereas clauses contained herein are hereby adopted as Findings of Fact.
b. The Property Owner is requesting approval of a Special Use Permit to operate a sidewalk café with alcoholic sales, as shown on the Site Plan attached hereto as Exhibit "B".
c. The City's professional staff determined that with the proposed stipulations, the project is consistent with the Comprehensive Plan and meets the criteria for approval under the Land Use Regulations.
d. The City's professional staff recommended stipulations to consider for an approval.
e. The Planning Commission, which is designated as the local planning agency, determined that with the proposed stipulations, the project is consistent with the Comprehensive Plan and meets the criteria for approval under the Land Use Regulations.
f. The Planning Commission recommended approval with stipulations.
g. The proposed use meets the review criteria in Section 3.3.2 of the City Code as follows:

    1. The tract of land is suitable for the type of use proposed by virtue of its location, topography, shape, and the nature of surrounding development. See 3.3.2.1.
    2. Access points are located so as to best suit the use and property. Wide spacing between access points and intersecting streets should be required when feasible. See 3.3.2.2.
    3. All buildings are located an adequate distance from property lines and streets. See 3.3.2.2.
    4. Permanent screening, such as walls, fences, hedges, and other barriers, are not needed to protect surrounding properties from view of the premises or noises from the use. See 3.3.2.4.
    5. Adequate ingress and egress is provided to property and proposed structures with particular regard for automobiles and pedestrian safety and convenience, traffic generation, flow and control and emergency access. See 3.3.2.5.
    6. Location and design of off-street parking and loading areas in regard to the items in "a." above and the smoke, noise, glare, dust, vibrations, fumes, pollution and other effects of the use on adjoining properties is adequate for the proposed use. See 3.3.2.5.

7. Location and design of refuse and service areas are sufficient in regard to availability, adequacy and effect upon surrounding properties. See 3.3.2.5.
8. Utilities, in regard to location, availability, adequacy and compatibility with surrounding properties are provided. See 3.3.2.5.
9. Screening, buffering or separation of any nuisance or hazardous feature of the use are not needed for the proposed use. See 3.3.2.5.
10. Proposed signs and exterior lighting are adequate with reference to glare, traffic safety and compatibility and harmony with surrounding properties. See 3.3.2.5.
11. Effect upon the value of surrounding properties; the use will not hinder the development of nearby vacant properties or adversely affect their economic value. See 3.3.2.5.
12. The land and/or building which are to be used are adequate for the proposed use. See 3.3.2.5.
13. The proposed use is compatible and appropriate with adjacent properties and other property in the district with special consideration given to the proposed hours of operation. See 3.3.2.5.
14. The proposed use will not affect the environmental quality of the district. See 3.3.2.5.
15. The proposed use is consistent with the city's comprehensive plan. See 3.3.2.5.

Section 2. Permit. Based upon the foregoing, a Special Use Permit is hereby approved and issued for the Property, to allow for a sidewalk café with alcoholic sales for a maximum of 3 tables and 18 chairs, as generally shown on the Site Plan attached hereto as Exhibit "B", subject to the following stipulations:

a. The approved Resolution, including the approved site plan and conditions shall be on display and accessible on the Property during business hours.
b. Within 30 days following the approval, the Property Owner shall execute an Indemnification Agreement in a form acceptable to the City.
c. No more than 2 tables may remain on the sidewalk when the business is closed. The tables shall be placed adjacent to the building unit and locked with a cable lock.
d. Clear pedestrian access on the public sidewalk of no less than 5' shall be maintained at all times in a way that neither seating nor tables affect the ingress/egress of travel, the safety or pedestrian and traffic circulation.
e. The property/business owner shall obtain all State licenses permitting the sale of alcohol as part of the sidewalk café.
f. Any cleaning solution used to clean the sidewalk café area shall be approved by the Bradenton Public Works.

g. Any future increase in seating for the sidewalk café area shall be approved by City Council.

Section 3. State and Federal Permits. Issuance of this development permit by the City does not in any way create any right on the part of the applicant to obtain a permit from a state or federal agency and does not create any liability on the part of the City for issuance of the permit if the applicant fails to obtain requisite approvals or fulfill the obligations imposed by a state or federal agency or undertakes actions that result in a violation of state or federal law. The applicant must obtain all applicable state and federal permits before commencing development or use.

Section 4. Severability. In the event that any portion or section of this Resolution is determined to be invalid, illegal or unconstitutional by a court of competent jurisdiction, such decisions shall in no manner affect the remaining portions or sections of the Resolution which shall remain in full force and effect.

Section 5. Effective Date. This Resolution shall be effective upon adoption.

ORDERED ON BEHALF OF THE CITY OF BRADENTON THIS 14th DAY OF MAY 2025.

THE CITY OF BRADENTON, BY AND THROUGH THE CITY COUNCIL OF THE CITY OF BRADENTON

ATTEST:

_____ _____

Tamara Melton
CITY CLERK

Gene Brown
MAYOR

APPROVED AS TO FORM:

_____
Scott Rudacille
CITY ATTORNEY

DRAFT

EXHIBIT "A"

Parcel 3318700006:
N 20.67 FT OF LOT 4 & S 3 FT OF LOT 5 FULLER BLOCK PI#33187.0000/6

DRAFT

EXHIBIT "B"

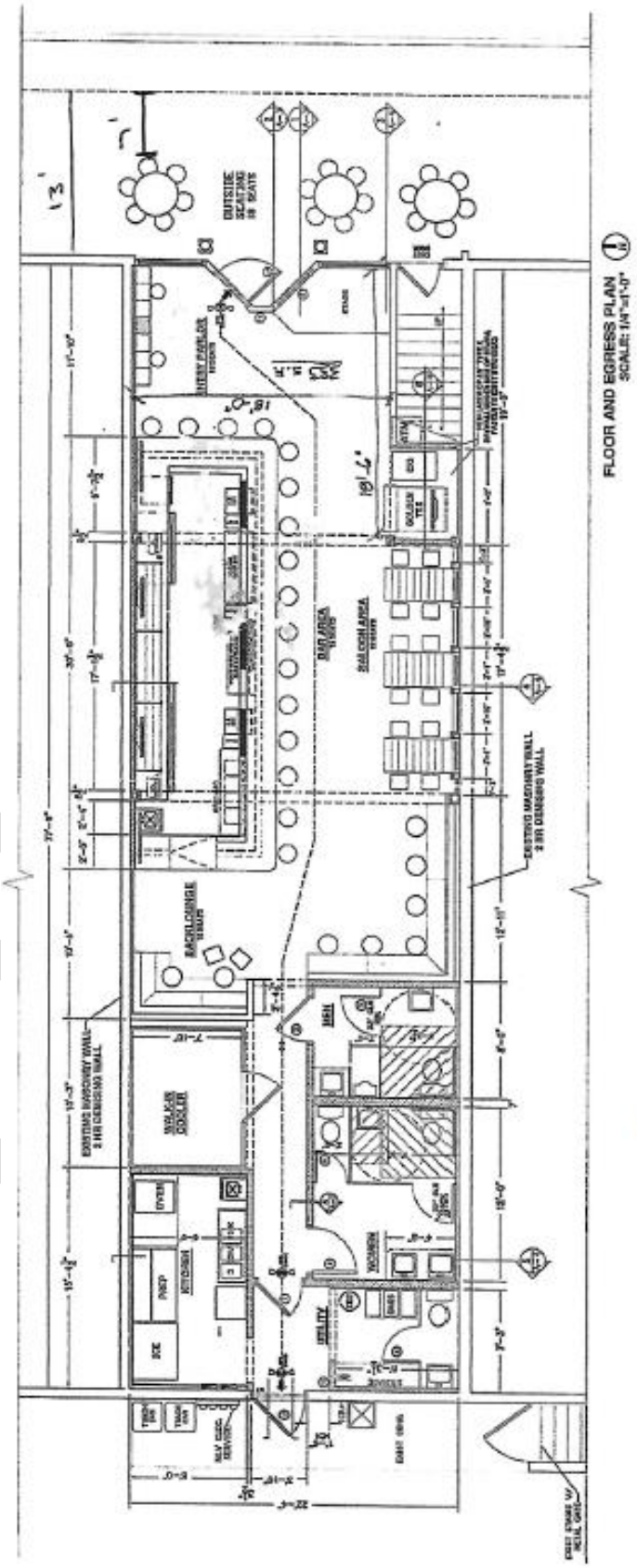
FLOOR AND EGRESS PLAN
SCALE: 1/4"=1'-0"
OUTSIDE SEATING 18 SEATS
BACK LOUNGE 10 SEATS
EXISTING MASONRY WALL 2 HR DEMISING WALL
EXISTING MASONRY WALL 2 HR DEMISING WALL

PLN-SUP-24-0008

Menu Reports Help

File Date: 12/30/2024

Application Status: New

Assigned To:

Application Name:

Application Detail: Detail

Scope of Work: Sidewalk Cafe Permit

Application Type: Special Use Permit

Documents:

File Name	Document Group	Category	Description	Type	Document Status	Document Status Date
Loaded Barrel Site Pla...	PLNG_SPUSE	Site Plan	Site plan for The L...	application/pdf	Uploaded	12/30/2024
Loaded Barrel Site Pla...	PLANNING	Other	Updated site plan f...	application/pdf	Uploaded	03/04/2025

Show all

Address: 450 12TH St W, BRADENTON, FL 34205

Owner Name: FAIR ANNE FOREST

Owner Address: 537 HILLCREST DRIVE, BRADENTON, FL 34209 184

Parcel No: 3318700006

Licensed Professionals Info:

Primary	License Number	License Type	Name	Business Name	Business License #

Application Comments:

View ID	Comment	Date

Initiated by Product: ACA

Contact Info:

Name	Organization Name	Contact Type	Status
Paul Kotlarczyk	The Loaded Barr...	Applicant	Active

Job Value: $0.00

Total Fee Assessed: $0.00

Total Fee Invoiced: $0.00

Balance: $0.00

Custom Fields:

SPECIAL USE

Type	Other
–	–

MEETING INFORMATION

Meeting Type	Date	Status

Workflow Status:

Task	Assigned To	Status	Status Date	Action By
Intake	Jamie Schindewolf	Additional I...	01/02/2025	Jamie Schindewolf
Case Manager				
Building Review				
Public Works Review				
Planning Review				
Fire Review				
Other Reviews				
Review Consolidation				
DRC				
Planning Commission				
City Council #1				
City Council #2				

Condition Status:

Name	Short Comments	Status	Apply Date	Severity	Action By

Scheduled/Pending Inspections:

Inspection Type	Scheduled Date	Inspector	Status	Comments

Resulted Inspections:

Inspection Type	Inspection Date	Inspector	Status	Comments

Addendum to Special Use Permit PLN-SUP-24-0008 Sidewalk Cafe Permit

It is the intention of The Loaded Barrel Tavern to leave the permitted sidewalk tables outside after business hours. The tables will be moved against the building and locked with a cable lock. The sidewalk chairs will be moved inside to allow city maintenance to service the sidewalks early morning.

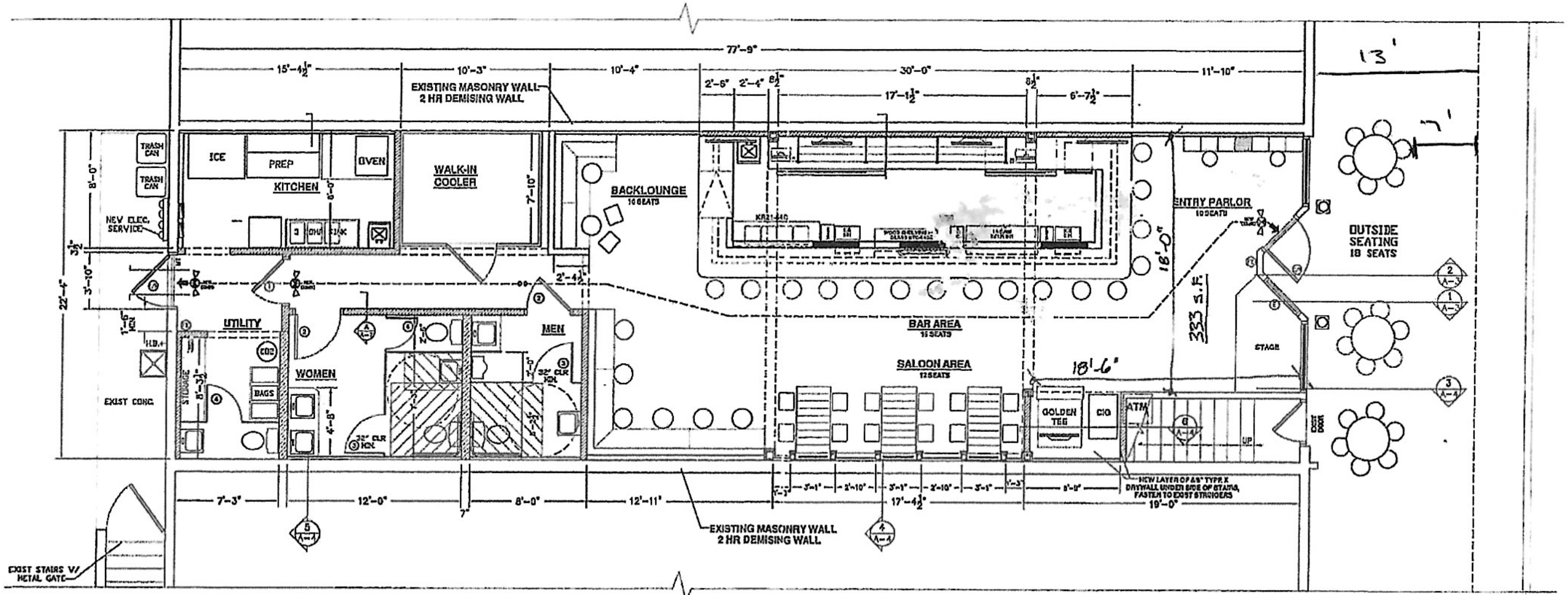

FLOOR AND EGRESS PLAN
SCALE: 1/4"=1'-0"

City of Bradenton
Planning and Community Development Department
Planning Commission Public Hearing
April 16, 2025

Staff Report

Case Number: PLN-SUP-24-0008
Res. Number: 25-41
Applicant: Paul Kotlarczyk (owner)
Owner: Whiskey Business, LLC
Address: 450 12th Street West
Parcel ID No: 3318700006
Current Zoning: T5 (Urban Center – Transect District)
Future Land Use: URBCORE (Urban Core)
Flood Zone: X

Surrounding Property Zoning:

Current Zoning: North: T5 (Urban Center – Transect District)
South: T5 (Urban Center – Transect District)
East: T6 (Urban Core – Transect District)
West: T5 (Urban Center – Transect District)

Future Land Use: North: URBCORE (Urban Core)
South: URBCORE (Urban Core)
East: URBCORE (Urban Core)
West: URBCORE (Urban Core)

Paul Kotlarczyk (owner) of The Loaded Barrel Tavern submitted a Special Use application requesting permission to allow a sidewalk café with alcoholic beverage sales at 450 12th Street West.

While a sidewalk café has been in place at the subject property, the Special Use process will ensure compliance to the City of Bradenton's Form Based Code and Land Use Regulations, should approval be granted by City Council.

According to the submitted application materials, the proposed café area will be located on the sidewalk along 12th Street West. Following is a summary of the request:

- Area size: 22'-4" x 13' (unit width and sidewalk depth).
- Number of Tables: 3-tables.
- Number of Seats: 18-chairs.

- Bussing and Hostess Stations: No.
- Table Umbrellas: No.
- Requesting permission to allow for the 2-tables to remain on the sidewalk after business hours. The tables will be moved against the building and locked with a cable lock.

Based on the submitted site plan, a minimum of 5' of traversable space for pedestrians to pass by the café area will be provided. There are no Fire Department Connections (FDC) within the proposed café area.

The City of Bradenton Development Review Committee (DRC) reviewed the request at their March 18, 2025, meeting and the Committee had no concerns with the proposed request.

The subject property is in the T5 Urban Center Transect Zoning District. According to Table 4.7 of the Form Based Code (FBC), Café/Sidewalk Café's with less than 20 seats are a permitted use. City Council approval may be required if there is the sale of Alcoholic beverages, per footnote #1 and Section 4.3.11.4 of the Land Use Regulations (LUR).

Table 4.7: Specific Function & Use.

	T3	T4-R	T4-S / T4-O	T5	T6	SD
Special Events		SU	SU	SU	SU	P
Retail Building			P	P	P	SU
Display Gallery			P	P	P	SU
Restaurant			P	P	P	SU
Kiosk			P	P	P	SU
Cafe/Sidewalk Cafe<20 seats[1]			P	P	P	P

1. City Council approval may be required. Refer to Sections 2.2.9 and 4.3.1 for alcoholic beverage sales and approval requirements.

FORM BASED CODE REGULATIONS:

12.1.d.vi *Sidewalk café.* An area where food or beverage is served from an adjacent café or restaurant to patrons seated at tables located within the sidewalk area adjacent to the café or restaurant.

COMPREHENSIVE PLAN:

Design Element:

Policy 1.1.1 Design Standards, Public Streets, Buildings/Architecture, Open Space, and the Public Realm

The City shall consider inclusion of additional requirements for enhancements in the Land Development Regulations. Standards for enhancements to be considered include the following:

Public Streets

Public Streets should provide the primary vehicle and pedestrian circulation infrastructure for the City. Public and private development should use the existing street grid as a framework and should expand the public street network as necessary to provide connectivity between new and older development. Development of new and extended streets should generally be kept in scale with the existing street network found along Bradenton's waterfront including the Downtown and Old Manatee Village areas.

2. Sidewalks are important to defining streets as civic places. Sidewalks should be provided along both sides of all streets and should be wide enough to accommodate visiting and residential pedestrians comfortably and safely. The pedestrian environment should be further enhanced through the use of fixed street furniture, compatible and consistent lighting, and landscaping. Sidewalk cafes, temporary art installations, and seasonal lighting are encouraged along public sidewalks as a means to encourage the year-round activity.

Policy 1.2.5 Sidewalk Design

The City shall require sidewalks to have a minimum clear width of five feet wide.

Private Property Rights Element

Policy 1 Statement of Rights

The following rights shall be considered in local decision making**:**

1. The right of a property owner to physically possess and control his or her interests in the property, including easements, leases, or mineral rights.
2. The right of a property owner to use, maintain, develop, and improve his or her property for personal use or the use of any other person, subject to state law and local ordinances.

3. The right of the property owner to privacy and to exclude others from the property to protect the owner's possession and property.
4. The right of a property owner to dispose of his or her property through sale or gift.

LAND USE REGULATIONS:

2.2.10 *Alcoholic beverage sale approval*. Administrative approval is allowable for all complete alcoholic beverage state license applications, except events proposed to be held on public property or requiring public services. The PCD director may require city council approval of certain alcoholic beverage license applications to protect the public interest. Certain uses associated with alcoholic beverage licensing may require discretionary review pursuant to schedule 3.2.1.2. and shall comply with subsection 2.2.9.

2.2.10.1 Application. The application (paper or electronic media in a PDF format) must indicate the type of state license the business is to operate under, and be accompanied by a site plan showing all churches, day care facilities and schools within a 1,000-foot radius of the subject property boundary, as well as other information that may be required by the PCD director to sufficiently review the application per subsection 4.3.1. The application fee is set forth in appendix A.

2.2.10.2 Public notice. When required, public notice shall be given as per subsection 2.3.1.

2.2.10.3 Review and approval. The application shall be reviewed using the criteria in subsection 4.3 pursuant to schedule 2.3. Upon the granting of approval by city council, or if administrative approval is authorized, the PCD director shall sign the state alcoholic beverage vending license application.

3.3 Special Use Permits.
Land uses requiring special use permits are those which have the potential of disturbing other land uses in the zoning district. Because they are not necessarily compatible with land uses in the zone in which they are allowed, they require discretionary review. Special uses are permitted only if in the specific instance the use will be compatible with surrounding uses or can be made compatible through limitations of their operation or enhancements of the site development design. The special use permit makes the stipulations of approval mandatory. The special use permit is valid for the property on which it is issued for as long as the conditions are

met, unless the approval stipulates otherwise. Schedules 3.2.1.1 (residential), and 3.2.1.2 (non-residential) indicate what uses require special use permits in various zones. See section 2.2.4 for the application procedure.

4.3.1 *Alcoholic beverage sale approval.* The following are the criteria for review and approval of an application for alcoholic beverage sales (see section 2.2.9 for application requirements).

4.3.1.1 Approval shall not be granted for a site in a residential land use atlas district.

4.3.1.2 Approval shall not be granted on any site within 300 feet of any place of worship, day care center, or public or private elementary, middle, or high school. In accordance with F.S. § 562.45(2a) establishments licensed after July 1, 1999, or restaurants not meeting the 51 percent rule shall not be located within 500 feet of any such school. Such distance shall be measured from the main entrance of the applicant establishment, along the shortest route of pedestrian travel, to the main entrance of the principal building of the place of worship or day care center, or to the nearest point on the school grounds.

4.3.1.3 Approval shall not be granted if the sale of alcoholic beverages is found to be incompatible with surrounding land uses.

4.3.1.4 Reasonable stipulations may be attached to an approval for the purpose of rendering the use compatible with surrounding land use. Stipulations may include, but are not limited to, restrictions on the hours of operation and the addition of buffer strips.

4.3.11 Sidewalk *café.* The sidewalk café provides for outdoor seating in conjunction with a restaurant or drinking establishment and is permitted in accordance with schedule 3.2.1.2 upon approval of a certificate of use or special use permit, and subject to the following restrictions:

4.3.11.1 *Seating area.* The number of outdoor seats and tables shall be limited to that number that can be reasonably accommodated according to the available widths of the associated storefront and sidewalk. Adjacent sidewalk bulb-out areas, even if not located directly in front of the associated storefront, may be considered on an individual basis, when the affected storefront owner does not object. Clear pedestrian access shall be maintained at all times, and no seating or tables shall interfere with ingress/egress of buildings or

create an unsafe situation with street traffic. The sidewalk café owner/operator shall remove from the sidewalk and place out of public view any seating or tables when the business is closed, or when an authorized agent of the city makes such a request.

4.3.11.2 *Maintenance.* Public sidewalk approved as part of any sidewalk café shall be properly maintained for safety and cleanliness by the sidewalk café owner/operator on a daily basis. Litter, dirt, grime, grease, and food shall not be permitted to accumulate at any time.

4.3.11.3 *Assurance.* An indemnity agreement, provided by the PCD director shall be signed and provided by the sidewalk café owner/operator, along with proof of public liability insurance as approved by the city attorney.

4.3.11.4 *[Alcoholic beverages.]* Alcoholic beverages served as part of any sidewalk café on public property shall require city council approval, pursuant to subsections 2.2.9 and 4.3.1. and F.S. chapters 561 and 562. City council reserves the right to limit the number of sidewalk cafes providing alcoholic beverage service.

Compliance Overview with Land Use Regulations

Land uses requiring Special Use Permits are those which have the potential of disturbing other land uses in the zoning district. Because they are not necessarily compatible with land uses in the zone in which they are allowed, they require discretionary review. Special uses are permitted only if the use will be compatible with surrounding uses or can be made compatible through limitations of their operation or enhancements of the site development design. The Special Use Permit makes the stipulations of approval mandatory. The Special Use Permit is valid for the property on which it is issued for as long as the conditions are met, unless the approval stipulates otherwise.

The following is a list of required Land Use Regulations subject to review for Special Use Permits:

GENERAL STANDARDS (LAND USE REGULATIONS):

3.3.1 *General standards.* All special uses shall comply at minimum with the following standards. Additional requirements may be made by city council to ensure compatibility of uses.

3.3.1.1 All special uses shall be subject to the general regulations of these LURs for single lot development, structures, lots, yards and vehicular use areas as well as the specific dimensional regulations for lots and structures for the zoning district in which the special use is proposed.

3.3.1.2 A landscaped separation strip of at least ten feet in width shall be provided along all property lines and along all streets serving the premises, except at approved access points.

3.3.1.3 If the use is listed as a specific use in section 4.3, the standards of that section must be met.

REVIEW CRITERIA (LAND USE REGULATIONS):

3.3.2 *Review criteria.* All special uses shall comply with and be reviewed using the following criteria to determine whether to allow the use at the proposed location and to determine appropriate conditions to the use.

3.3.2.1 The tract of land must be suitable for the type of use proposed by virtue of its location, topography, shape and the nature of surrounding development.

Staff Response: It appears that the proposed use of a sidewalk café is suitable for the subject locations.

3.3.2.2 Access points must be located so as to best suit the use and property. Wide spacing between access points and intersecting streets should be required when feasible.

Staff Response: It appears that access points will not be negatively impacted by the proposed use.

3.3.2.3 All buildings shall be located an adequate distance from property lines and streets. Setbacks in excess of those required for the specific zone may be required to lessen the effect of the use on neighboring properties.

Staff Response: No new buildings will be constructed as part of the proposed use.

3.3.2.4 Permanent screening, such as walls, fences, hedges, and other barriers, may be required to protect surrounding properties

from view of the premises or noises from the use. The minimum height and other parameters of such screening may be specified.

Staff Response: Requirement cannot be met due to the existing built environment.

3.3.2.5 The following shall be considered and cited as reasons for approval or denial of the application:

a. Adequacy of ingress and egress to property and proposed structures with particular regard for automobiles and pedestrian safety and convenience, traffic generation, flow and control and emergency access.

   Staff Response: No new ingress and egress points are being proposed as part of the subject request. The applicant is also proposing a minimum of 5' of traversable space on the public sidewalk.

b. Location and design of off-street parking and loading areas in regard to the items in "a." above and the smoke, noise, glare, dust, vibrations, fumes, pollution, and other effects of the use on adjoining properties.

   Staff Response: It appears that the subject request will not have any negative impacts on adjacent properties as far as smoke, glare, dust, vibrations, fumes, and pollution.

c. Location and design of refuse and service areas in regard to availability, adequacy, and effect upon surrounding properties.

   Staff Response: It appears that the subject request will not affect the location and design of existing refuse and service areas.

d. Utilities, in regard to location, availability, adequacy and compatibility with surrounding properties.

   Staff Response: It appears that the subject request will not affect or impact existing utilities.

e. Screening, buffering or separation of any nuisance or hazardous feature of the use.

Staff Response: No screening, buffering or separation are being proposed as the area is a built environment.

f. Proposed signs and exterior lighting with reference to glare, traffic safety and compatibility and harmony with surrounding properties.

   Staff Response: No new lighting or signage is being proposed as part of the subject requests. Should any lighting or signage be installed in the future, it shall be in accordance with the City of Bradenton's requirements.

g. Effect upon the value of surrounding properties; the use shall not hinder the development of nearby vacant properties or adversely affect their economic value.

   Staff Response: It appears that the subject request will not adversely affect the economic value of surrounding properties.

h. Adequacy of land and/or building which are to be used.

   Staff Response: It appears that the area is adequate in size for the subject request. The subject request is to ensure compliance to the Form Based Code and Land Use Regulations.

i. General compatibility or appropriateness with adjacent properties and other property in the district with special consideration given to the proposed hours of operation.

   Staff Response: It appears that the proposed request is appropriate for the subject property and district.

j. Environmental quality of the district in which the use is proposed and the effect the special use permit might have on such quality.

   Staff Response: It appears that there will be no negative impacts to the existing environmental quality of the district as a result of the subject request.

k. Consistency with the city's comprehensive plan.

   Staff Response: It appears that the proposed sidewalk café is consistent with the Comprehensive Plan as the Comprehensive Plan encourages walkability and non-auto-oriented uses.

STAFF COMMENTS:

1. Planning Commission is encouraged to evaluate the request based on the provided criteria, as well as input from staff, the applicant, and the public.
2. It is in staff's opinion that the request is found to be consistent with the intent of Section 3.3.2.5 of the Land Use Regulations and the Design Element of the Comprehensive Plan.

Should the Planning Commission wish to recommend to City Council approval the subject request, staff recommends that the following stipulations be applied to the approval:

a. The approved Resolution, including the approved site plan and conditions shall be on display and accessible on the Property during business hours.
b. Within 30 days following the approval, the Property Owner shall execute an Indemnification Agreement in a form acceptable to the City.
c. No more than 2 tables may remain on the sidewalk when the business is closed. The tables shall be placed adjacent to the building unit and locked with a cable lock.
d. Clear pedestrian access on the public sidewalk of no less than 5' shall be maintained at all times in a way that neither seating nor tables affect the ingress/egress of travel, the safety or pedestrian and traffic circulation.
e. The property/business owner shall obtain all State licenses permitting the sale of alcohol as part of the sidewalk café.
f. Any cleaning solution used to clean the sidewalk café area shall be approved by the Bradenton Public Works.
g. Any future increase in seating for the sidewalk café area shall be approved by City Council.

Respectfully submitted,

Gregory J. DeLong
Assistant Director of Planning & Community Development

EXHIBITS:

EXHIBIT "A": Location Map

EXHIBIT "B": Future Land Use Map

EXHIBIT "C": Zoning Map

EXHIBIT "D": Proposed Overall Project Site Layout

EXHIBIT "A"
Location Map



EXHIBIT "B"
Future Land Use Map

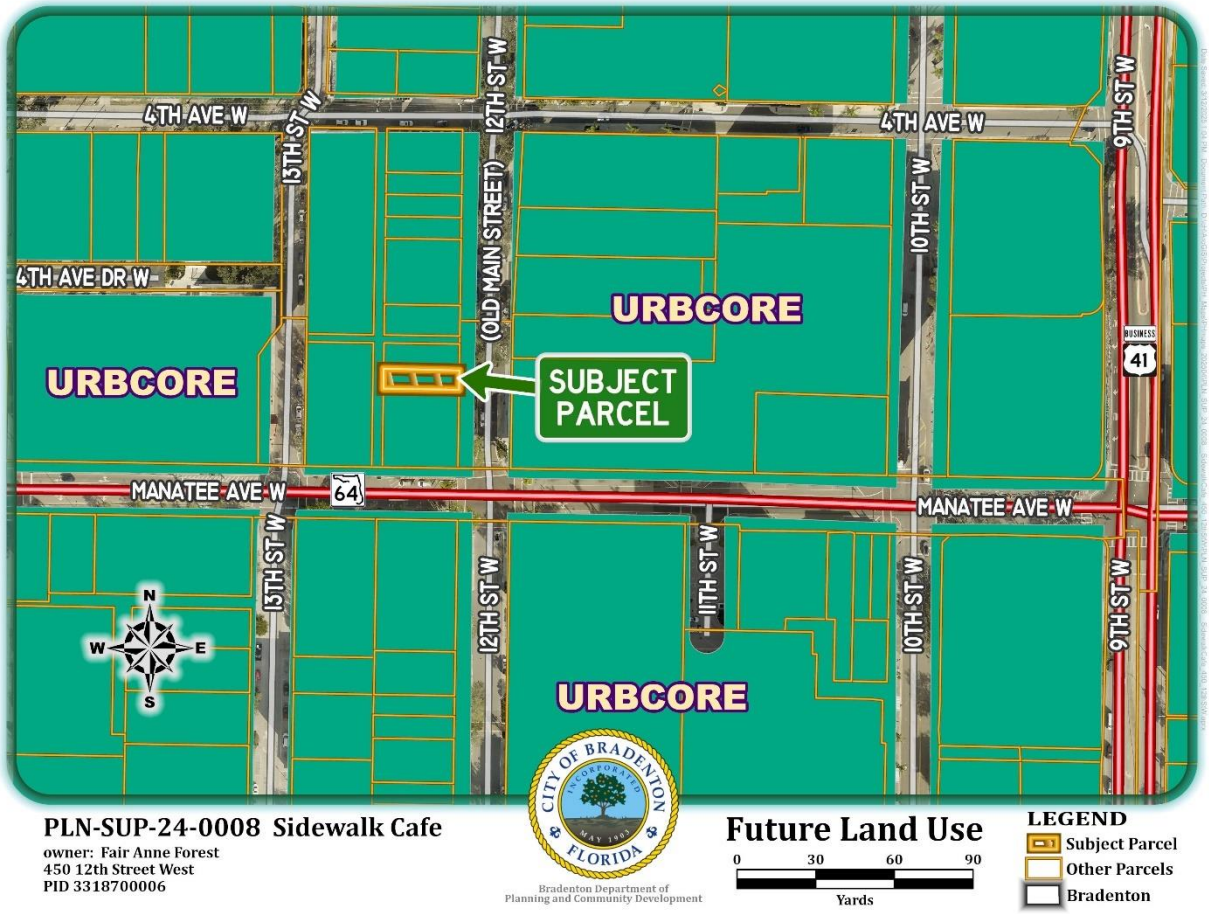

EXHIBIT "C"
Zoning Map

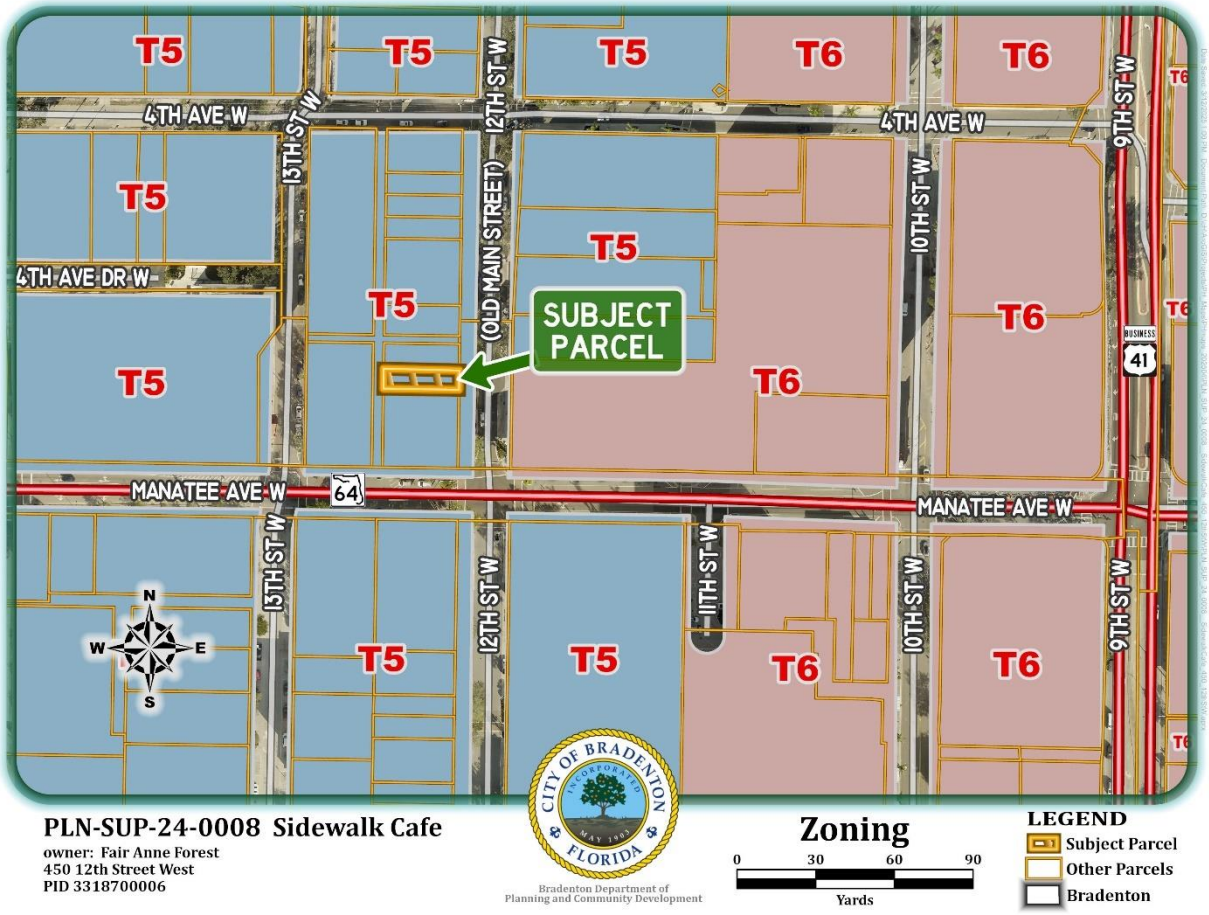

EXHIBIT "D"
Proposed Project Site Layout

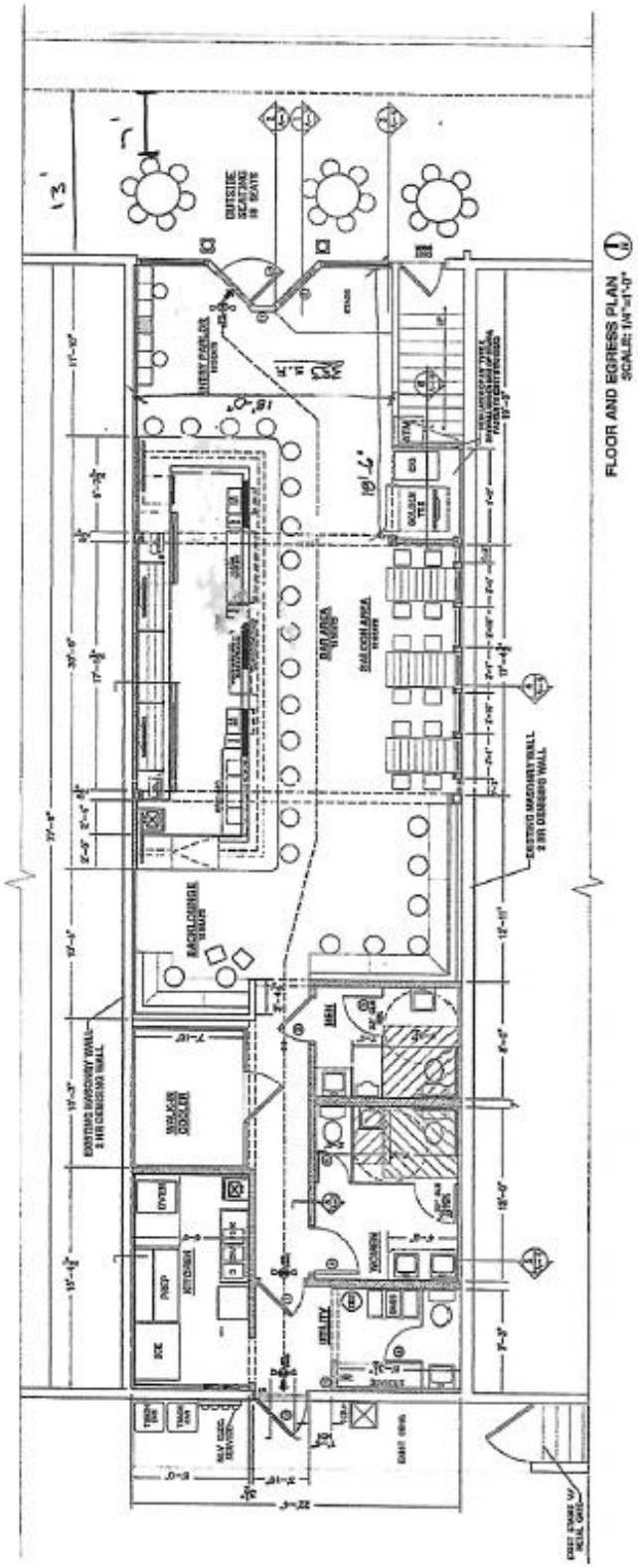

AGENDA ITEM NO. 7.b

Item Cover Page

PLANNING COMMISSION MEETING AGENDA ITEM REPORT

DATE: April 16, 2025

SUBMITTED BY: Greg DeLong, Planning & Community Development

ITEM TYPE: Resolution

AGENDA SECTION: **AGENDA ITEMS**

SUBJECT: **Resolution 25-40, Case PLN-SUP-25-0004:**

Request for a Special Use Permit to allow for a sidewalk café with alcoholic beverage sales; to be located at 1166 3rd Avenue West (Parcel ID 3294300003) in the T6 (Urban Core) transect zoning district. Application filed by Melissa Lilly (agent) for the City of Bradenton (owner).

SUGGESTED ACTION: Motion to recommend to City Council either approval or denial of Resolution 25-40, Case PLN-SUP-25-0004.

If the action is to approve, the following are recommended stipulations for approval:

a. The approved Resolution, including the approved site plan and conditions shall be on display and accessible on the Property during business hours.
b. Clear pedestrian access on the public sidewalk of no less than 5’ shall be maintained at all times in a way that neither seating or tables affect the ingress/egress of travel, the safety or pedestrian and traffic circulation.
c. The property/business owner shall obtain all State licenses permitting the sale of alcohol as part of the sidewalk café.
d. Any cleaning solution used to clean the sidewalk café area shall be approved by the Bradenton Public Works.
e. Any future increase in seating for the sidewalk

café area shall be approved by City Council.

Is this item Quasi-Judicial?
Yes

Does this item require a public hearing?
Yes

EXPLANATION:
The applicant has submitted a Special Use Permit application requesting permission to allow a sidewalk cafe with alcoholic beverages at 1166 3rd Avenue West.

While a sidewalk cafe has been in place at the subject property, the subject Special Use Permit will ensure compliance to the City of Bradenton's Form Based Code and Land Use Regulations, should approval be granted by City Council.

FINANCIAL IMPACT:
N/A

ATTORNEY REVIEW/RECOMMENDATION:
Reviewed by City Attorney Rudacille.

SUGGESTED MOTION:
Motion to recommend either approval or denial of Resolution 25-40 with stipulations recommended by staff.

ATTACHMENTS:
Resolution 25-40 (DRAFT).pdf
Application.pdf
Staff Report.pdf

RESOLUTION 25-40

A RESOLUTION OF THE CITY COUNCIL OF THE CITY OF BRADENTON, FLORIDA, GRANTING SPECIAL USE PERMIT NO. PLN-SUP-25-0004 TO PERMIT A SIDEWALK CAFÉ WITH ALCOHOLIC BEVERAGE SALES FOR PROPERTY LOCATED AT 1166 3RD AVENUE WEST, BRADENTON, FLORIDA (PARCEL ID NO 3294300003), IN THE T6 URBAN CORE TRANSECT ZONING DISTRICT; PROVIDING FOR SEVERABILITY; AND PROVIDING FOR AN EFFECTIVE DATE.

WHEREAS, The City of Bradenton (the "Property Owner" or "Applicant") owns the property located at 1166 3rd Avenue West, Bradenton, Florida (Parcel ID No 3294300003), more particularly described in Exhibit "A" (the "Property"), and

WHEREAS, the City of Bradenton Comprehensive Plan's Future Land Use Map designates the Property as Urban Core (URBCORE); and

WHEREAS, the City of Bradenton Official Zoning Map classifies the Property under the (T6) Urban Core – Transect Zoning District; and

WHEREAS, the City of Bradenton Form Based Code, Table 4.7, identifies uses in the T6 transect zoning district; and

WHEREAS, the City of Bradenton Form Based Code, Table 4.7, identifies Café/Sidewalk Café with less than 20 seats as a permitted use in the T6 transect zoning district; but stipulates that City Council approval may be required per the Land Use Regulations; and

WHEREAS, the City of Bradenton Land Use Regulations, Section 4.3.11.4, states that alcoholic beverage sales served as part of any sidewalk café on public property shall require City Council approval; and

WHEREAS, the Property Owner submitted an application for a Special Use Permit to permit a sidewalk café with alcohol sales; and

WHEREAS, the Planning Commission held a noticed public hearing on April 16, 2025, at which the Commission received testimony and evidence from the Applicant and City Planning staff; and

WHEREAS, the City Council held a noticed public hearing on May 14, 2025, at which the Council received testimony and evidence from City Planning staff and members of the public in attendance.

NOW, THEREFORE, the City Council makes the following Findings of Fact and Conclusions of Law and issues the Final Order as follows:

Section 1. Findings of Fact and Conclusions of Law. After considering the evidence on the record and that presented at public hearing, including the staff report and the recommendation of the Planning Commission, the City Council hereby makes the following Findings of Fact and Conclusions of Law:

a. The Whereas clauses contained herein are hereby adopted as Findings of Fact.
b. The Property Owner is requesting approval of a Special Use Permit to operate a sidewalk café with alcoholic sales, as shown on the Site Plan attached hereto as Exhibit "B".
c. The City's professional staff determined that with the proposed stipulations, the project is consistent with the Comprehensive Plan and meets the criteria for approval under the Land Use Regulations.
d. The City's professional staff recommended stipulations to consider for an approval.
e. The Planning Commission, which is designated as the local planning agency, determined that with the proposed stipulations, the project is consistent with the Comprehensive Plan and meets the criteria for approval under the Land Use Regulations.
f. The Planning Commission recommended approval with stipulations.
g. The proposed use meets the review criteria in Section 3.3.2 of the City Code as follows:

    1. The tract of land is suitable for the type of use proposed by virtue of its location, topography, shape, and the nature of surrounding development. See 3.3.2.1.
    2. Access points are located so as to best suit the use and property. Wide spacing between access points and intersecting streets should be required when feasible. See 3.3.2.2.
    3. All buildings are located an adequate distance from property lines and streets. See 3.3.2.3.
    4. Permanent screening, such as walls, fences, hedges, and other barriers, are not needed to protect surrounding properties from view of the premises or noises from the use. See 3.3.2.4.
    5. Adequate ingress and egress is provided to property and proposed structures with particular regard for automobiles and pedestrian safety and convenience, traffic generation, flow and control and emergency access. See 3.3.2.5.
    6. Location and design of off-street parking and loading areas in regard to the items in "a." above and the smoke, noise, glare, dust, vibrations, fumes, pollution and other effects of the use on adjoining properties is adequate for the proposed use. See 3.3.2.5.

7. Location and design of refuse and service areas are sufficient in regard to availability, adequacy and effect upon surrounding properties. See 3.3.2.5.
8. Utilities, in regard to location, availability, adequacy and compatibility with surrounding properties are provided. See 3.3.2.5.
9. Screening, buffering or separation of any nuisance or hazardous feature of the use are not needed for the proposed use. See 3.3.2.5.
10. Proposed signs and exterior lighting are adequate with reference to glare, traffic safety and compatibility and harmony with surrounding properties. See 3.3.2.5.
11. Effect upon the value of surrounding properties; the use will not hinder the development of nearby vacant properties or adversely affect their economic value. See 3.3.2.5.
12. The land and/or building which are to be used are adequate for the proposed use. See 3.3.2.5.
13. The proposed use is compatible and appropriate with adjacent properties and other property in the district with special consideration given to the proposed hours of operation. See 3.3.2.5.
14. The proposed use will not affect the environmental quality of the district. See 3.3.2.5.
15. The proposed use is consistent with the City's comprehensive plan. See 3.3.2.5.

Section 2. Permit. Based upon the foregoing, a Special Use Permit is hereby approved and issued for the Property, to allow for a sidewalk café with alcoholic sales for a maximum of 4-tables and 12-chairs, as generally shown on the Site Plan attached hereto as Exhibit "B", subject to the following stipulations:

a. The approved Resolution, including the approved site plan and conditions shall be on display and accessible on the Property during business hours.
b. Clear pedestrian access on the public sidewalk of no less than 5' shall be maintained at all times in a way that neither seating or tables affect the ingress/egress of travel, the safety or pedestrian and traffic circulation.
c. The property/business owner shall obtain all State licenses permitting the sale of alcohol as part of the sidewalk café.
d. Any cleaning solution used to clean the sidewalk café area shall be approved by the Bradenton Public Works.
e. Any future increase in seating for the sidewalk café area shall be approved by City Council.

Section 3. State and Federal Permits. Issuance of this development permit by the City does not in any way create any right on the part of the Applicant to obtain a permit from a state or federal agency and does not create any liability on the part of the City for issuance of the permit if the Applicant fails to obtain

requisite approvals or fulfill the obligations imposed by a state or federal agency or undertakes actions that result in a violation of state or federal law. The Applicant must obtain all applicable state and federal permits before commencing development or use.

Section 4. Severability. In the event that any portion or section of this Resolution is determined to be invalid, illegal or unconstitutional by a court of competent jurisdiction, such decisions shall in no manner affect the remaining portions or sections of the Resolution which shall remain in full force and effect.

Section 5. Effective Date. This Resolution shall be effective upon adoption.

ORDERED ON BEHALF OF THE CITY OF BRADENTON THIS 14th DAY OF MAY 2025.

THE CITY OF BRADENTON, BY AND THROUGH THE CITY COUNCIL OF THE CITY OF BRADENTON

ATTEST:

_____ _____

Tamara Melton
CITY CLERK

Gene Brown
MAYOR

APPROVED AS TO FORM:

_____

Scott Rudacille
CITY ATTORNEY

DRAFT

EXHIBIT "A"

Parcel 3294300003:
LOTS 1 & 2 GRAHAMS RESUB OF LOTS 1 THRU 6 OF TURNER PLAT & THE DREDGED LAND & BUILT LAND N OF SAID LOTS 1 & 2 GRAHAM RESUB, BEING LOC & SITUATED BET THE UPLAND OF SAID LOTS 1 & 2 & SEA WALL, TOGETHER WITH ALL RIP RTS- ALSO LOTS 3,4,5,6,7, 8,9,10,11 SUB OF LOTS 1 THRU 6, ALSO ALL MADE LAND BET THE FOREGOING LOTS & MANATEE RIVER (PIER) TURNER PLAT PI#32943.0000/3

DRAFT

EXHIBIT "B"

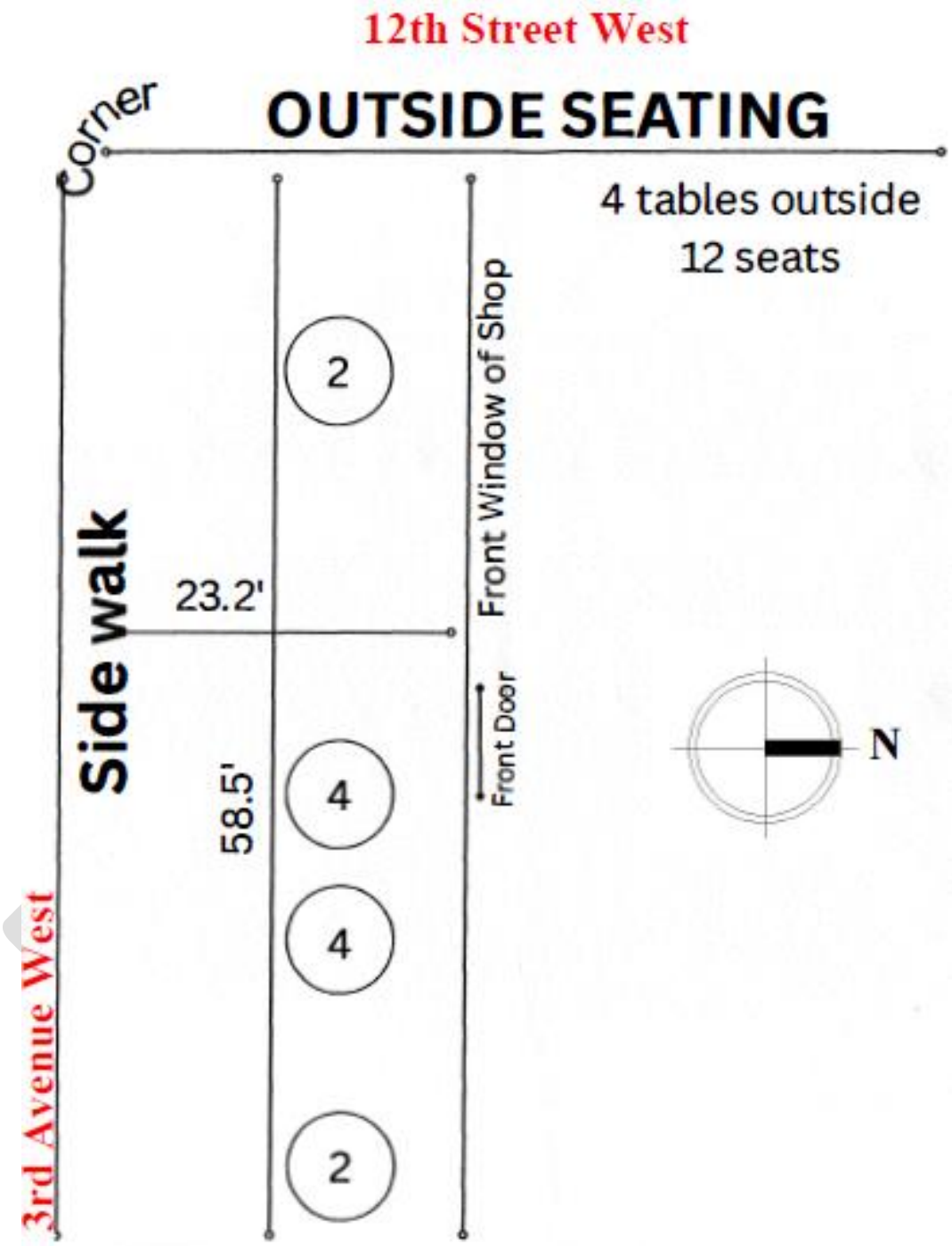
12th Street West
Corner
OUTSIDE SEATING
4 tables outside
12 seats
Front Window of Shop
2
Side walk
23.2'
Front Door
58.5'
4
4
2
3rd Avenue West
N

PLN-SUP-25-0004

Menu Reports Help

File Date: 02/27/2025

Application Status: Scheduled-Planning Commission

Assigned To:

Application Name:

Application Detail: Detail

Scope of Work: Coffee Shop/Cafe

Application Type: Special Use Permit

Documents:

File Name	Document Group	Category	Description	Type	Document Status	Document Status Date

Show all

Address: 1166 3RD Ave W, BRADENTON, FL 34205

Owner Name: BRADENTON CITY OF

Owner Address: CALLER SERVICE 25015, BRADENTON, FL 34206

Parcel No: 3294300003

Licensed Professionals Info:

Primary	License Number	License Type	Name	Business Name	Business License #

Application Comments:

View ID	Comment	Date

Initiated by Product: ACA

Contact Info:

Name	Organization Name	Contact Type	Status
Melissa J Lilly	Orange Blossom ...	Applicant	Active
Kaitlyn Lilly	Orange Blossom ...	Authorized Agent	Active

Job Value: $0.00

Total Fee Assessed: $0.00

Total Fee Invoiced: $0.00

Balance: $0.00

Custom Fields:

SPECIAL USE

Type	Other
Restaurant >20 Seats	

MEETING INFORMATION

Meeting Type	Date	Status

Workflow Status:

Task	Assigned To	Status	Status Date	Action By
Intake	Greg DeLong	Ready for Pr...	03/05/2025	Greg DeLong
Case Manager		Ready for Re...	03/05/2025	Greg DeLong
Building Review				
Public Works Review				
Fire Review				
Other Reviews				
Planning Review	Greg DeLong	Pass	03/05/2025	Greg DeLong
Review Consolidation	Greg DeLong	Scheduled fo...	03/05/2025	Greg DeLong
DRC				
Planning Commission	Greg DeLong			
City Council #1				
City Council #2				

Condition Status:

Name	Short Comments	Status	Apply Date	Severity	Action By

Scheduled/Pending Inspections:

Inspection Type	Scheduled Date	Inspector	Status	Comments

Resulted Inspections:

Inspection Type	Inspection Date	Inspector	Status	Comments

bradenton
The Friendly City

Agent Authorization Form

Department of Planning & Community Development
101 Old Main Street, Bradenton, FL 34205
Ph: (941) 932-9400
www.cityofbradenton.com

PLANNING & ZONING AGENT AUTHORIZATION FORM

Property Address: 1166 3RD Ave W BRADENTON 34205

I, MELISSA J LILLY, the registered property owner(s) of the above noted property, do hereby authorize

MELISSA J. LILLY — Print Name of Agent
ORANGE BLOSSOM COFFEE SHOP INC — Company Name

to act on my behalf and take all actions necessary for the processing, issuance and acceptance of this permit or certification and any and all standards and conditions applicable.

AGENT AUTHORIZATION — REQUIRED

Melissa Lilley — Signature of Owner(s)
1221 30TH ST W, BRADENTON FL 34205 — Owner(s) Address (if different than property above)

SAME — Signature of Agent
Agent Address and Phone

STATE OF FLORIDA, MANATEE COUNTY

The Foregoing instrument was acknowledged before me by means of ✓ physical presence or online notarization, this 4TH day of MARCH 2025, produced FL D.L. L463-615-97-000-0 respectively, as identification and who did (did not) take an oath:

NOTARY — REQUIRED

Corey Fortin
Signature

Corey J. Fortin, Notary Public
Print Name

Notary Public State of Florida
Corey J. Fortin
My Commission HH 594015
Expires 12/5/2028

State of Florida
My Commission Expires: 12/5/28

12th Street West

OUTSIDE SEATING

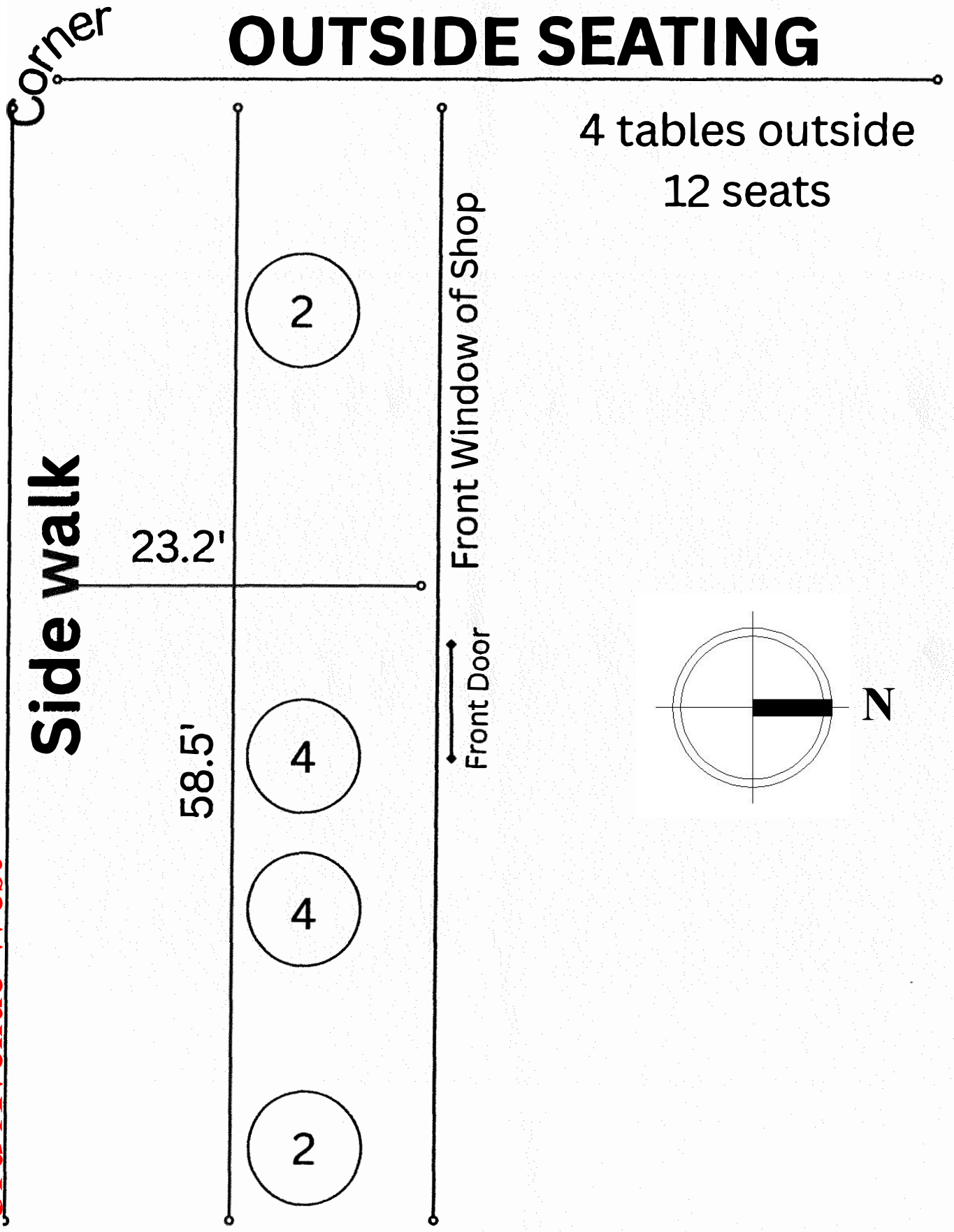

4 tables outside

12 seats

City of Bradenton
Planning and Community Development Department
Planning Commission Public Hearing
April 16, 2025

Staff Report

Case Number: PLN-SUP-25-0004
Res. Number: 25-40
Applicant: Melissa Lilly (agent)
Owner: City of Bradenton
Address: 1166 3rd Avenue West
Parcel ID No: 3294300003
Current Zoning: T6 (Urban Core – Transect District)
Future Land Use: URBCORE (Urban Core)
Flood Zone: AE, X

Surrounding Property Zoning:

Current Zoning: North: T6 (Urban Core – Transect District)
South: T5 (Urban Center – Transect District)
East: T6 (Urban Core – Transect District)
West: T5 (Urban Center – Transect District)

Future Land Use: North: URBCORE (Urban Core)
South: URBCORE (Urban Core)
East: URBCORE (Urban Core)
West: URBCORE (Urban Core)

Melissa Lilly of Orange Blossom Coffee (agent), for the City of Bradenton, submitted a Special Use application requesting permission to allow a sidewalk café with alcoholic beverage sales at 1166 3rd Avenue West.

While a sidewalk café has been in place at the subject property, the Special Use process will ensure compliance to the City of Bradenton's Form Based Code and Land Use Regulations, should approval be granted by City Council.

According to the submitted application materials, the proposed café area will be located on the sidewalk along 12th Street West. Following is a summary of the request:

- Area size: 58.5' x 23.2' (unit width and sidewalk depth).
- Number of Tables: 4-tables.
- Number of Seats: 12-chairs.

- Bussing and Hostess Stations: No.
- Table Umbrellas: No.

Based on the submitted site plan, a minimum of 5' of traversable space for pedestrians to pass by the café area will be provided. There are no Fire Department Connections (FDC) within the proposed café area.

The City of Bradenton Development Review Committee (DRC) reviewed the request at their March 18, 2025, meeting and had no concerns with the proposed request.

The subject property is in the T6 Urban Core Transect Zoning District. According to Table 4.7 of the Form Based Code (FBC), Café/Sidewalk Café's with less than 20 seats are a permitted use. City Council approval may be required if there is the sale of Alcoholic beverages, per footnote #1 and Section 4.3.11.4 of the Land Use Regulations (LUR).

Table 4.7: Specific Function & Use.

	T3	T4-R	T4-S / T4-O	T5	T6	SD
Special Events		SU	SU	SU	SU	P
Retail Building			P	P	P	SU
Display Gallery			P	P	P	SU
Restaurant			P	P	P	SU
Kiosk			P	P	P	SU
Cafe/Sidewalk Cafe<20 seats[1]			P	P	P	P

1. City Council approval may be required. Refer to Sections 2.2.9 and 4.3.1 for alcoholic beverage sales and approval requirements.

FORM BASED CODE REGULATIONS:

12.1.d.vi *Sidewalk café.* An area where food or beverage is served from an adjacent café or restaurant to patrons seated at tables located within the sidewalk area adjacent to the café or restaurant.

COMPREHENSIVE PLAN:

Design Element:

> *Policy 1.1.1 Design Standards, Public Streets, Buildings/Architecture, Open Space, and the Public Realm*

The City shall consider inclusion of additional requirements for enhancements in the Land Development Regulations. Standards for enhancements to be considered include the following:

Public Streets

Public Streets should provide the primary vehicle and pedestrian circulation infrastructure for the City. Public and private development should use the existing street grid as a framework and should expand the public street network as necessary to provide connectivity between new and older development. Development of new and extended streets should generally be kept in scale with the existing street network found along Bradenton's waterfront including the Downtown and Old Manatee Village areas.

2. Sidewalks are important to defining streets as civic places. Sidewalks should be provided along both sides of all streets and should be wide enough to accommodate visiting and residential pedestrians comfortably and safely. The pedestrian environment should be further enhanced through the use of fixed street furniture, compatible and consistent lighting, and landscaping. Sidewalk cafes, temporary art installations, and seasonal lighting are encouraged along public sidewalks as a means to encourage the year-round activity.

Policy 1.2.5 Sidewalk Design

The City shall require sidewalks to have a minimum clear width of five feet wide.

Private Property Rights Element

Policy 1 Statement of Rights

The following rights shall be considered in local decision making**:**

1. The right of a property owner to physically possess and control his or her interests in the property, including easements, leases, or mineral rights.
2. The right of a property owner to use, maintain, develop, and improve his or her property for personal use or the use of any other person, subject to state law and local ordinances.
3. The right of the property owner to privacy and to exclude others from the property to protect the owner's possession and property.
4. The right of a property owner to dispose of his or her property through sale or gift.

LAND USE REGULATIONS:

2.2.10 *Alcoholic beverage sale approval*. Administrative approval is allowable for all complete alcoholic beverage state license applications, except events proposed to be held on public property or requiring public services. The PCD director may require city council approval of certain alcoholic beverage license applications to protect the public interest. Certain uses associated with alcoholic beverage licensing may require discretionary review pursuant to schedule 3.2.1.2. and shall comply with subsection 2.2.9.

2.2.10.1 Application. The application (paper or electronic media in a PDF format) must indicate the type of state license the business is to operate under, and be accompanied by a site plan showing all churches, day care facilities and schools within a 1,000-foot radius of the subject property boundary, as well as other information that may be required by the PCD director to sufficiently review the application per subsection 4.3.1. The application fee is set forth in appendix A.

2.2.10.2 Public notice. When required, public notice shall be given as per subsection 2.3.1.

2.2.10.3 Review and approval. The application shall be reviewed using the criteria in subsection 4.3 pursuant to schedule 2.3. Upon the granting of approval by city council, or if administrative approval is authorized, the PCD director shall sign the state alcoholic beverage vending license application.

3.3 Special Use Permits.
Land uses requiring special use permits are those which have the potential of disturbing other land uses in the zoning district. Because they are not necessarily compatible with land uses in the zone in which they are allowed, they require discretionary review. Special uses are permitted only if in the specific instance the use will be compatible with surrounding uses or can be made compatible through limitations of their operation or enhancements of the site development design. The special use permit makes the stipulations of approval mandatory. The special use permit is valid for the property on which it is issued for as long as the conditions are met, unless the approval stipulates otherwise. Schedules 3.2.1.1 (residential), and 3.2.1.2 (non-residential) indicate what uses require special use permits in various zones. See section 2.2.4 for the application procedure.

4.3.1 *Alcoholic beverage sale approval.* The following are the criteria for review and approval of an application for alcoholic beverage sales (see section 2.2.9 for application requirements).

4.3.1.1 Approval shall not be granted for a site in a residential land use atlas district.

4.3.1.2 Approval shall not be granted on any site within 300 feet of any place of worship, day care center, or public or private elementary, middle, or high school. In accordance with F.S. § 562.45(2a) establishments licensed after July 1, 1999, or restaurants not meeting the 51 percent rule shall not be located within 500 feet of any such school. Such distance shall be measured from the main entrance of the applicant establishment, along the shortest route of pedestrian travel, to the main entrance of the principal building of the place of worship or day care center, or to the nearest point on the school grounds.

4.3.1.3 Approval shall not be granted if the sale of alcoholic beverages is found to be incompatible with surrounding land uses.

4.3.1.4 Reasonable stipulations may be attached to an approval for the purpose of rendering the use compatible with surrounding land use. Stipulations may include, but are not limited to, restrictions on the hours of operation and the addition of buffer strips.

4.3.11 Sidewalk *café.* The sidewalk café provides for outdoor seating in conjunction with a restaurant or drinking establishment and is permitted in accordance with schedule 3.2.1.2 upon approval of a certificate of use or special use permit, and subject to the following restrictions:

4.3.11.1 *Seating area.* The number of outdoor seats and tables shall be limited to that number that can be reasonably accommodated according to the available widths of the associated storefront and sidewalk. Adjacent sidewalk bulb-out areas, even if not located directly in front of the associated storefront, may be considered on an individual basis, when the affected storefront owner does not object. Clear pedestrian access shall be maintained at all times, and no seating or tables shall interfere with ingress/egress of buildings or create an unsafe situation with street traffic. The sidewalk café owner/operator shall remove from the sidewalk and place out of public view any seating or tables when the business is closed, or when an authorized agent of the city makes such a request.

4.3.11.2 *Maintenance.* Public sidewalk approved as part of any sidewalk café shall be properly maintained for safety and cleanliness by the sidewalk café owner/operator on a daily basis. Litter, dirt, grime, grease, and food shall not be permitted to accumulate at any time.

4.3.11.3 *Assurance.* An indemnity agreement, provided by the PCD director shall be signed and provided by the sidewalk café owner/operator, along with proof of public liability insurance as approved by the city attorney.

4.3.11.4 *[Alcoholic beverages.]* Alcoholic beverages served as part of any sidewalk café on public property shall require city council approval, pursuant to subsections 2.2.9 and 4.3.1. and F.S. chapters 561 and 562. City council reserves the right to limit the number of sidewalk cafes providing alcoholic beverage service.

Compliance Overview with Land Use Regulations

Land uses requiring Special Use Permits are those which have the potential of disturbing other land uses in the zoning district. Because they are not necessarily compatible with land uses in the zone in which they are allowed, they require discretionary review. Special uses are permitted only if the use will be compatible with surrounding uses or can be made compatible through limitations of their operation or enhancements of the site development design. The Special Use Permit makes the stipulations of approval mandatory. The Special Use Permit is valid for the property on which it is issued for as long as the conditions are met, unless the approval stipulates otherwise.

The following is a list of required Land Use Regulations subject to review for Special Use Permits:

GENERAL STANDARDS (LAND USE REGULATIONS):

3.3.1 *General standards.* All special uses shall comply at minimum with the following standards. Additional requirements may be made by city council to ensure compatibility of uses.

3.3.1.1 All special uses shall be subject to the general regulations of these LURs for single lot development, structures, lots, yards and vehicular use areas as well as the specific dimensional regulations for lots and structures for the zoning district in which the special use is proposed.

3.3.1.2 A landscaped separation strip of at least ten feet in width shall be provided along all property lines and along all streets serving the premises, except at approved access points.

3.3.1.3 If the use is listed as a specific use in section 4.3, the standards of that section must be met.

REVIEW CRITERIA (LAND USE REGULATIONS):

3.3.2 *Review criteria.* All special uses shall comply with and be reviewed using the following criteria to determine whether to allow the use at the proposed location and to determine appropriate conditions to the use.

3.3.2.1 The tract of land must be suitable for the type of use proposed by virtue of its location, topography, shape and the nature of surrounding development.

Staff Response: It appears that the proposed use of a sidewalk café is suitable for the subject locations.

3.3.2.2 Access points must be located so as to best suit the use and property. Wide spacing between access points and intersecting streets should be required when feasible.

Staff Response: It appears that access points will not be negatively impacted by the proposed use.

3.3.2.3 All buildings shall be located an adequate distance from property lines and streets. Setbacks in excess of those required for the specific zone may be required to lessen the effect of the use on neighboring properties.

Staff Response: No new buildings will be constructed as part of the proposed use.

3.3.2.4 Permanent screening, such as walls, fences, hedges, and other barriers, may be required to protect surrounding properties from view of the premises or noises from the use. The minimum height and other parameters of such screening may be specified.

Staff Response: Requirement cannot be met due to the existing built environment.

3.3.2.5 The following shall be considered and cited as reasons for approval or denial of the application:

a. Adequacy of ingress and egress to property and proposed structures with particular regard for automobiles and pedestrian safety and convenience, traffic generation, flow and control and emergency access.

   Staff Response: No new ingress and egress points are being proposed as part of the subject request. The applicant is also proposing a minimum of 5′ of traversable space on the public sidewalk.

b. Location and design of off-street parking and loading areas in regard to the items in "a." above and the smoke, noise, glare, dust, vibrations, fumes, pollution, and other effects of the use on adjoining properties.

   Staff Response: It appears that the subject request will not have any negative impacts on adjacent properties as far as smoke, glare, dust, vibrations, fumes, and pollution.

c. Location and design of refuse and service areas in regard to availability, adequacy, and effect upon surrounding properties.

   Staff Response: It appears that the subject request will not affect the location and design of existing refuse and service areas.

d. Utilities, in regard to location, availability, adequacy and compatibility with surrounding properties.

   Staff Response: It appears that the subject request will not affect or impact existing utilities.

e. Screening, buffering or separation of any nuisance or hazardous feature of the use.

   Staff Response: No screening, buffering or separation are being proposed as the area is a built environment.

f. Proposed signs and exterior lighting with reference to glare, traffic safety and compatibility and harmony with surrounding properties.

Staff Response: No new lighting or signage is being proposed as part of the subject requests. Should any lighting or signage be installed in the future, it shall be in accordance with the City of Bradenton's requirements.

g. Effect upon the value of surrounding properties; the use shall not hinder the development of nearby vacant properties or adversely affect their economic value.

Staff Response: It appears that the subject request will not adversely affect the economic value of surrounding properties.

h. Adequacy of land and/or building which are to be used.

Staff Response: It appears that the area is adequate in size for the subject request. The subject request is to ensure compliance to the Form Based Code and Land Use Regulations.

i. General compatibility or appropriateness with adjacent properties and other property in the district with special consideration given to the proposed hours of operation.

Staff Response: It appears that the proposed request is appropriate for the subject property and district.

j. Environmental quality of the district in which the use is proposed and the effect the special use permit might have on such quality.

Staff Response: It appears that there will be no negative impacts to the existing environmental quality of the district as a result of the subject request.

k. Consistency with the city's comprehensive plan.

Staff Response: It appears that the proposed sidewalk café is consistent with the Comprehensive Plan as the Comprehensive Plan encourages walkability and non-auto-oriented uses.

STAFF COMMENTS:

1. Planning Commission is encouraged to evaluate the request based on the provided criteria, as well as input from staff, the applicant, and the public.

2. It is in staff's opinion that the request is found to be consistent with the intent of Section 3.3.2.5 of the Land Use Regulations and the Design Element of the Comprehensive Plan.

Should the Planning Commission wish to recommend to City Council approval the subject request, staff recommends that the following stipulations be applied to the approval:

a. The approved Resolution, including the approved site plan and conditions shall be on display and accessible on the Property during business hours.
b. Clear pedestrian access on the public sidewalk of no less than 5' shall be maintained at all times in a way that neither seating or tables affect the ingress/egress of travel, the safety or pedestrian and traffic circulation.
c. The property/business owner shall obtain all State licenses permitting the sale of alcohol as part of the sidewalk café.
d. Any cleaning solution used to clean the sidewalk café area shall be approved by the Bradenton Public Works.
e. Any future increase in seating for the sidewalk café area shall be approved by City Council.

Respectfully submitted,

Gregory J. DeLong
Assistant Director of Planning & Community Development

EXHIBITS:

EXHIBIT "A": Location Map

EXHIBIT "B": Future Land Use Map

EXHIBIT "C": Zoning Map

EXHIBIT "D": Proposed Overall Project Site Layout

EXHIBIT "A"
Location Map

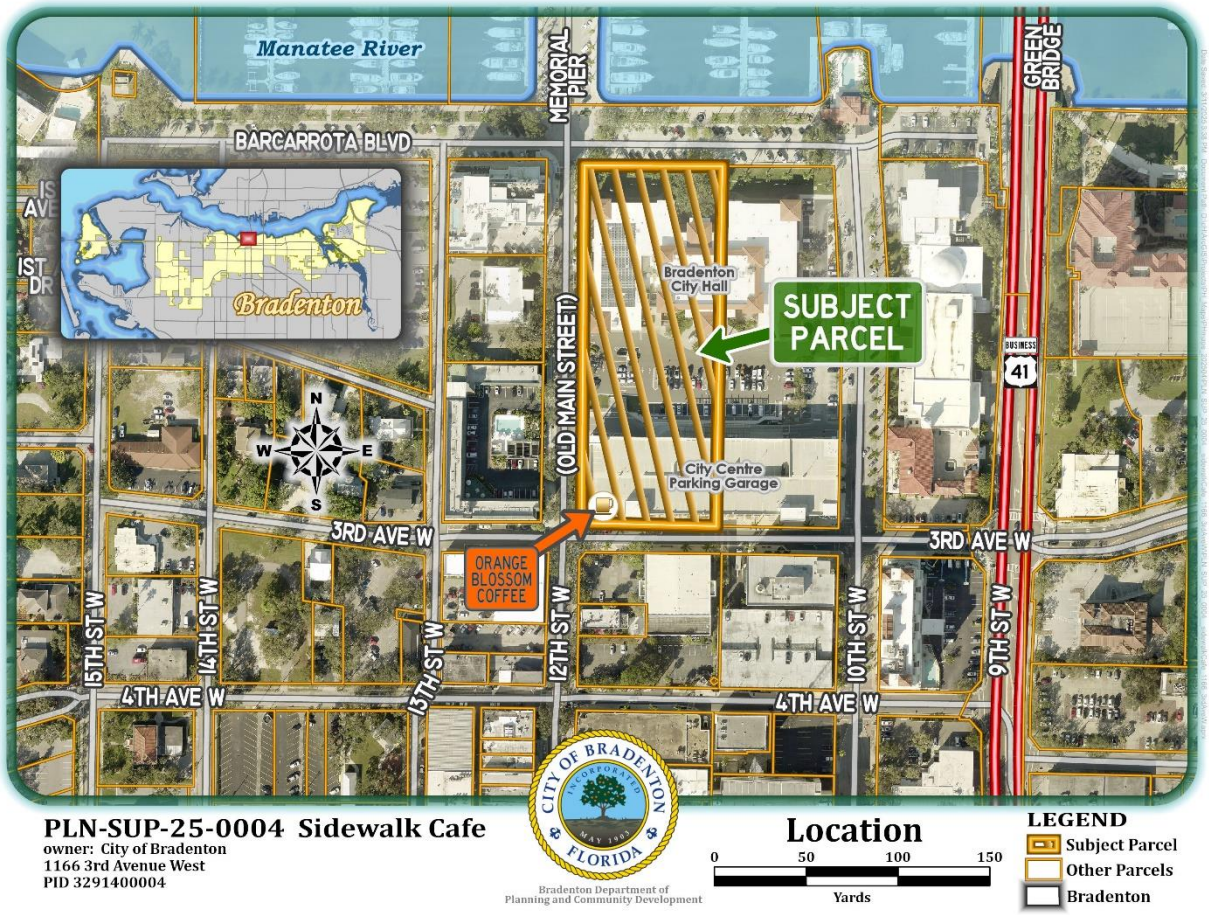

EXHIBIT "B"
Future Land Use Map



EXHIBIT "C"
Zoning Map



EXHIBIT "D"
Proposed Project Site Layout

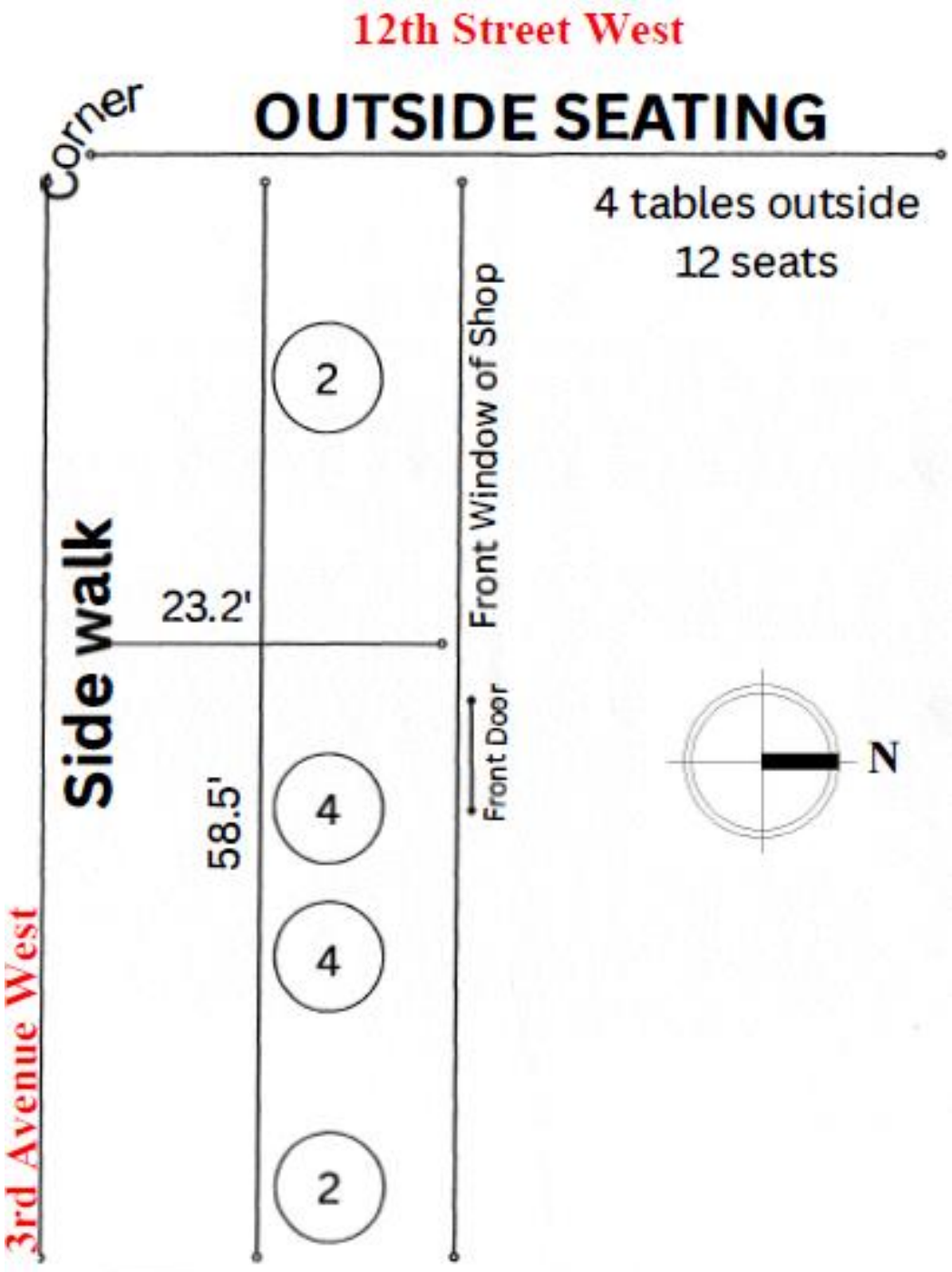

AGENDA ITEM NO. 7.c

Item Cover Page

PLANNING COMMISSION MEETING AGENDA ITEM REPORT

DATE: April 16, 2025

SUBMITTED BY: Brandon Wink, Planning & Community Development

ITEM TYPE: Resolution

AGENDA SECTION: **AGENDA ITEMS**

SUBJECT: **Final Order PLN-FBA-25-0002, Case PLN-FBA-25-0002:**

Request for a Form Based Code Adjustment to allow for an additional wall sign to be located on the west façade; for property located at 1111 3rd Avenue West (Parcel ID 3294701009) in the T5 (Urban Center) transect zoning district. Application filed by Amanda Norman and Nicholas St. John (agents) for River View Complex, LLC (owner).

SUGGESTED ACTION: Move to recommend either approval or denial of Final Order PLN-FBA-25-0002, Case PLN-FBA-25-0002.

Is this item Quasi-Judicial?
Yes

Does this item require a public hearing?
Yes

EXPLANATION:

The applicant is requesting approval to install an additional wall sign on the western façade of a building in the T-5 Urban Center transect zoning district. Form Based Code Section 4.12.5.c states that projects in T-5 are allowed "Wall Signs, maximum of 1 per Façade visible from common travel ways with a maximum area of 2 square feet per linear foot of the side of the building on which the sign is to be placed, not to exceed 60 square feet and 3 feet in height."

FINANCIAL IMPACT:

N/A

ATTORNEY REVIEW/RECOMMENDATION:
Reviewed by City Attorney Rudacille.

SUGGESTED MOTION:
Move to recommend either approval or denial of Final Order PLN-FBA-25-0002.

ATTACHMENTS:
Final Order: PLN-FBA-25-0002.pdf
Application.pdf
Staff Report.pdf

FINAL ORDER FBA-25-0003

A FINAL ORDER OF THE PLANNING COMMISSION OF THE CITY OF BRADENTON APPROVING AN ADJUSTMENT FOR A SECONDARY WALL SIGN OF 24.16 SQUARE FEET ON THE WEST FAÇADE OF THE PROPERTY LOCATED AT 1111 3RD AVENUE WEST, BRADENTON, FLORIDA

WHEREAS, River View Complex LLC, (the "Property Owner"), owns property located at 1111 3rd Avenue West, Bradenton, Florida (the "Property); and

WHEREAS, the City of Bradenton Comprehensive Plan's Future Land Use Map designates the Property as Urban Core; and

WHEREAS, the City of Bradenton Official Zoning Map classifies the Property under the Urban Center (T-5) designation; and

WHEREAS, the City of Bradenton Form Based Code Regulations, Section 1.10 allows for adjustments to be granted by the Director of Planning and Community Development, Planning Commission and/or the Architectural Review Board, depending on the level of the request; and

WHEREAS, the City of Bradenton Form Based Code Regulations, Section 4.12.5 identifies permitted sign types in the T5 zoning districts; and

WHEREAS, Schedule 4.12.5c specifically prohibits a secondary wall sign from being on the same façade of a building; and

WHEREAS, the Applicant applied for an adjustment to permit a 24.16 square foot secondary wall sign on the west façade; and

WHEREAS, the Planning Commission held a noticed public hearing on April 16, 2025 at which the Board received testimony and evidence from the applicant and City Planning staff; and

NOW, THEREFORE, the Planning Commission makes the following Adjustment Appeal Criteria conclusion and issues the Final Order as follows:

Section 1. Approval Criteria. After considering the evidence on the record and that presented at public hearing, including the staff report, applicant presentation and comments from the public, the Planning Commission hereby makes the following Adjustment Appeal Criteria conclusion:

a. The Whereas clauses contained herein are hereby adopted as Adjustment Appeal Criteria.

b. The Applicant is requesting approval of an adjustment to install a 24.16 square foot secondary wall sign on the west façade of 1111 3rd Avenue West, as described in "Exhibit A".

c. The City's professional staff provided information to the Planning Commission detailing the proposed projects relationship with the City's Form Based Code, Comprehensive Plan, and Land Use Regulations.

d. Staff recommends approval of the request.

e. The Planning Commission, which is designated as one of the local reviewing agencies for adjustments to the Form Based Code, determined that the project as proposed is consistent with the Form Based Code, Comprehensive Plan, and Land Use Regulations and meets the criteria for approval under the Land Use Regulations.

The proposed use, meets Section 1.10.6 of the Form Based Code, as further described below.

I. Granting the Adjustment will promote the same general level of land use compatibility as the otherwise applicable standards; and
II. Granting the Adjustment will not materially affect adjacent land uses and the physical character of uses in the immediate vicinity of the proposed development because of inadequate buffering, screening, setback and other land use considerations; and
III. Granting the Adjustment will be generally consistent with the purpose and intent of the Form-Based Code and the existing LURs, where applicable.

Section 2. Order. Based upon the foregoing, an Adjustment is hereby approved and issued for the Property, to allow the installation of a secondary 24.16 square foot wall sign on the west façade, as show in attached Exhibit "B".

Section 3. State and Federal Permits. Issuance of this permit by the City does not in any way create any right on the part of the applicant to obtain a permit from a state or federal agency and does not create any liability on the part of the City for issuance of the permit if the applicant fails to obtain requisite approvals or fulfill the obligations imposed by a state or federal agency or undertakes actions that result in a violation of state or federal law. The applicant must obtain all applicable state and federal permits before commencing development or use.

Section 4. Severability. In the event that any portion or section of this Order is determined to be invalid, illegal or unconstitutional by a court of competent

jurisdiction, such decisions shall in no manner affect the remaining portions or sections of the Adjustment Permit which shall remain in full force and effect.

Section 5. Effective Date. This Order shall be effective upon its adoption.

ORDERED ON BEHALF OF THE CITY OF BRADENTON THIS 16TH DAY OF APRIL, 2025.

THE CITY OF BRADENTON, BY AND THROUGH THE PLANNING COMMISSION OF THE CITY OF BRADENTON

ATTEST:

Lori Brunner PCD ADMINISTRATIVE ASSISTANT	Benjamin Bakker Chair, Planning Commission

EXHIBIT A

DESCRIPTION:

PARCEL 1: UNITS 101, 102, 103, 104, 105, 201, 202, 301 AND 302, RIVERVIEW CENTER, A CONDOMINIUM, ACCORDING TO THE DECLARATION OF CONDOMINIUM RECORDED IN OFFICIAL RECORDS BOOK 1051, PAGE 2033, AND AS PER PLAT THEREOF RECORDED IN CONDOMINIUM BOOK 14, PAGE 121, OF THE PUBLIC RECORDS OF MANATEE COUNTY, FLORIDA.

PARCEL 2: THE SOUTH ½ OF LOTS 9 AND 10, W.I. TURNER'S PLAT OF BRAIDENTOWN, AS PER PLAT THEREOF RECORDED IN DEED BOOK D, PAGE 527, OF THE PUBLIC RECORDS OF MANATEE COUNTY, FLORIDA, ALSO A LOT BOUNDED ON THE NORTH BY LOTS 9 AND 10 OF SAID TURNER'S PLAT, ON THE EAST BY HARRIS LOT, ON THE SOUTH BY PARK STREET; ON THE WEST BY MAIN STREET, AS SHOWN ON SAID TURNER PLAT. ALSO THE WEST 10 FEET OF LOT 7, BLOCK C, SMITH'S ADDITION TO BRAIDENTOWN, RECORDED IN PLAT BOOK 1, PAGE 135, ALL OF THE PUBLIC RECORDS OF MANATEE COUNTY, FLORIDA. ALSO PART OF A 20 FOOT WIDE ALLEY VACATED BY RESOLUTION 84–85, RECORDED IN OFFICIAL RECORDS BOOK 1092, PAGE 240.

LESS THAT PORTION CONVEYED BY DEED RECORDED IN OFFICIAL RECORDS BOOK 1902, PAGE 1531, DESCRIBED AS FOLLOWS:

COMMENCE AT THE SOUTHWEST CORNER OF LOT 7, BLOCK C, SMITH'S ADDITION TO BRAIDENTOWN, AS PER PLAT THEREOF RECORDED IN PLAT BOOK 1, PAGE 135 OF THE PUBLIC RECORDS OF MANATEE COUNTY, FLORIDA; THENCE N89°45'00"E, ALONG THE SOUTH LINE OF SAID LOT 7, ALSO BEING THE NORTH RIGHT–OF–WAY LINE OF 4TH AVENUE WEST, A DISTANCE OF 10.00 FEET TO THE SOUTHEAST CORNER OF THE WEST 10.00 FEET OF SAID LOT 7; THENCE N00°18'25"E, ALONG THE WEST LINE OF SAID WEST 10.00 FEET, A DISTANCE OF 11.95 FEET TO THE MOST EASTERLY CORNER POST OF A FENCE ENCLOSURE SURROUNDING A CONCRETE DUMPSTER PAD, SAID MOST EASTERLY CORNER POST BEING THE POINT OF BEGINNING; THENCE AROUND THE OUTSIDE EXTREMITIES OF SAID FENCE ENCLOSURE, INCLUSIVE OF ALL FENCE POSTS, THE FOLLOWING FOUR COURSES AND DISTANCES: N45°06'11"W, 11.10 FEET; THENCE S44°53'49"W, 10.90 FEET; THENCE S45°06'11"E, 11.10 FEET; THENCE N44°53'49"E, 10.90 FEET TO THE POINT OF BEGINNING.

EXHIBIT B



102 Linear Feet of Frontage
(TBD/sf Allocated)

*Illustration for placement purposes only.
Actual design and specs are above.





PLN-FBA-25-0002

Menu Reports Help

File Date: 02/11/2025

Application Status: Ready for Processing

Assigned To:

Application Name:

Application Detail: Detail

Scope of Work: This is our formal letter of request for an adjustment in the Formed-Base Code for the sign project at Storage Building Company located at 1111 3RD Ave W, Bradenton, FL, 34205. We request an adjustment or variance to Section 4.12.5C allowing an additional sign for the East face of the building. The additional sign would only add 24.16 square feet and be 6" less than half of the allocated max amount per sign. The s is contoured channel letters reading "SBC". The sign is to face a parking lot on the east side of the building with major tree coverage making the sign only visible from some street locations.

Application Type: Form Based Code Adjustment

Documents:

File Name	Document Group	Category	Description	Type	Document Status	Document Status Date
20241114 Storage Build...			Engineered plans	application/pdf	Uploaded	02/11/2025
ADJUSTMENT REVIEW CRIT...			Adjustment review c...	application/pdf	Uploaded	02/11/2025
Channel Letters Shop D...			Plans with site pla...	application/pdf	Uploaded	02/11/2025
Letter of request.pdf			Formal letter of re...	application/pdf	Uploaded	02/11/2025
Property Survey.pdf			This is the latest ...	application/pdf	Uploaded	02/11/2025

Show all

Address: 1111 3RD Ave W, 302 BRADENTON, FL 34205

Owner Name: RIVER VIEW COMPLEX LLC

Owner Address: 1990 MAIN ST STE 801, SARASOTA, FL 34236 800

Parcel No: 3294701009

Licensed Professionals Info:

Primary	License Number	License Type	Name	Business Name	Business License #

Application Comments:

View ID	Comment	Date

Initiated by Product: ACA

Contact Info:

Name	Organization Name	Contact Type	Status
Amanda Norman	Storage Buildin...	Applicant	Active
Nicholas S St John		Applicant	Active

Job Value: $0.00

Total Fee Assessed: $0.00

Total Fee Invoiced: $0.00

Balance: $0.00

Custom Fields:

Workflow Status:

Task	Assigned To	Status	Status Date	Action By
Intake	Brandon Wink	Ready for Pr...	02/20/2025	Jamie Schindewolf
Case Manager	Brandon Wink			
Building Review				
Planning Review				
Fire Review				
Other Reviews				
Review Consolidation				
Architectural Review B...				

Condition Status:

Name	Short Comments	Status	Apply Date	Severity	Action By

Scheduled/Pending Inspections:

Inspection Type	Scheduled Date	Inspector	Status	Comments

Resulted Inspections:

Inspection Type	Inspection Date	Inspector	Status	Comments

NICHOLAS ST JOHN

411 7th St w Palmetto, FL | 941-722-7446 ext. 5 | Nick@speedkingsigns.com

01/31/2025

Planning and Zoning
City of Bradenton
101 12th st W
Bradenton, FL 34205

Dear Planning and Zoning:

This is our formal letter of request for an adjustment in the Formed-Base Code for the sign project at Storage Building Company located at 1111 3RD Ave W, Bradenton, FL, 34205. We request an adjustment or variance to Section *4.12.5C* allowing an additional sign for the East face of the building. The additional sign would only add 24.16 square feet and be 6" less than half of the allocated max amount per sign. The sign is contoured channel letters reading "SBC". The sign is to face a parking lot on the east side of the building with major tree coverage making the sign only visible from some street locations.

Thank you for your time,

Nicholas St John
Authorized agent for Storage Building Company
941-565-4958 • Nick@speedkingsigns.com

ADJUSTMENT REVIEW CRITERIA:

Prepare detailed written responses, using factual statements (called Findings of Fact) to explain how the requested Adjustment complies with each of the following review criteria:

1. ***Granting the Adjustment will promote the same general level of land use compatibility as the otherwise applicable standards.***

•This signage has no influence on land use compatibility.

2. ***Granting the Adjustment will not materially affect adjacent land uses and the physical character of uses in the immediate vicinity of the proposed development because of inadequate buffering, screening, setback and other land use considerations.***

•This signage has no influence on land use for adjacent land or any of the above topics.

3. ***Granting the Adjustment will be generally consistent with the purpose and intent of the Form- Based Code and the existing LURs, where applicable.***

• The sign fits proportionately in the designated space on the building with room for additional signage. The sign also utilizes less than 45% of the allotted 60 square feet per sign as described in section 4.12.5c "*a maximum area of 2 square feet per linear foot of the side of the building on which the sign is to be placed, not to exceed 60 square feet"*

•The sign uses attractive colors and a contoured design for a modern look complimenting signage style found in the surrounding area.

•The sign is facing a parking lot to the East of the building. The lot is scattered with trees and other foliage making the sign only partially visible from the surrounding sidewalks and street.

•The sign is using a high efficiency, low voltage LED system making the sign more congruent with the intentions for energy efficient buildings set forth in Section 1.3.3E*e. That buildings should provide their inhabitants with a clear sense of geography and climate through energy efficient methods.*

Front-Lit Channel Letters w/ LED Illumination • Individually Mounted • Storage Building Co. • Bradenton • FL



This item has been digitally signed and sealed by Christian Langley PE on the date adjacent to the seal.
Printed copies of this document are not considered signed and sealed and the signature must be verified on any electronic copies.
Serial: 51 A6 FC E1 40 BB 1B 57 18 07 E8 4F



CHRISTIAN LANGLEY LICENSE No. 67382 STATE OF FLORIDA PROFESSIONAL ENGINEER
NOV 14 2024
ENGINEER'S SIGNATURE
Easy Seals

Christian Langley
Florida PE #67382
Cert of Auth #31124
1200 N Federal Hwy, #200
Boca Raton, FL 33432
1-888-371-3113

TORNADO LOADS: Design for Tornado Loads is NOT Required

ASCE 7-22 WIND LOADS: • Sign Height = 30 ft max • V=160 mph • Exposure 'C' • Risk Category 2 Structure • Wall components & cladding: • Zone 4: ± **36.0 psf** • Zone 5: ± **45.9 psf** • Kzt=1.0, Kd=0.85, G=0.85 • ASD Load Coeff = 0.6

A Front-Lit, Plex-Face Channel Letters w/ LED, Individually Mounted • Front View

SCALE: 0/0" = 1' 0" • For Production / For Presentation

INTERNALLY ILLUMINATED PLASTIC FACE CHANNEL LETTERS

QUANTITY: ONE (1)
Overall Height: 2'-5"
Overall Length: 10'-0"
Total Sq.Ft.: 24.16 ft²
Returns: Black
Backs: White
Trimcap: Black
Face: White
First-surface translucent vinyl: Orangs and Day/Night Black
Illumination: White LED

NOTES:
• Individually Mounted
• Low voltage wiring to pentrate staircase wall and be hidden inside of a hat channel for aesthetics. Sign to be wired to existing main sign disconnect on interior staircase wall. Additional exterior disconnects to be places on channel letter.

ANCHOR SCHEDULE ***ALL FASTENERS SHALL BE SPACED EVENLY***

WALL MATERIAL	ANCHOR TYPE	QTY or SPACING
CONCRETE (3ksi) or HOLLOW MASONRY	1/4" THREADED RODS WITH MIN 2" EMBED IN ADHESIVE	- - - -NOT- - - -APPLICABLE-
	1/4" TAPCONS (OR EQUIV) WITH 1.75" EMBED	MIN (3) PER LTR/LOGO
	1/4" EXPANSION ANCHORS WITH 2.5" EMBED	MIN (3) PER LTR/LOGO
1/2" PLYWOOD (NO ACCESS BEHIND)	1/4" TOGGLE BOLTS	MIN (3) PER LTR/LOGO
	1/4" WOOD SCREWS, FULL EMBED	MIN (3) PER LTR/LOGO
METAL STUDS OR METAL PANELS	#14 METAL SCREWS TO MIN 18ga STEEL OR 0.090" ALUM	MIN (3) PER LTR/LOGO
HOLLOW WALL (BLOCKING BEHIND)	1/4" THRUBOLTS OR LAGS TO SOLID BLOCKING BEHIND	MIN (3) PER LTR/LOGO

CHANNEL LETTER - TYPICAL SECTION - FRONT-LIT PLASTIC FACE

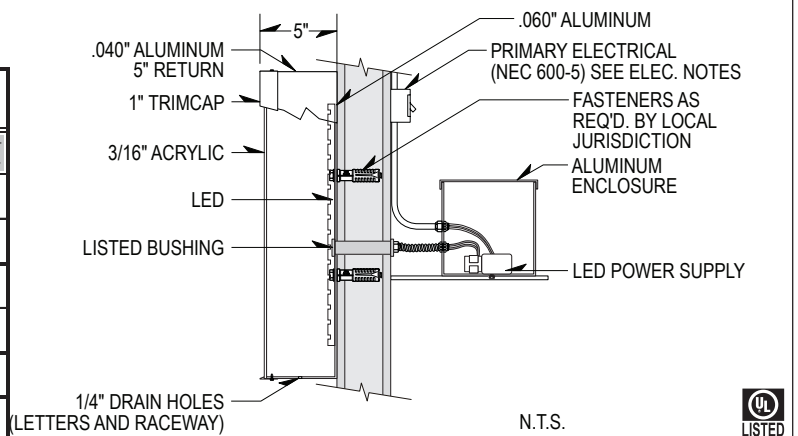

ELECTRICAL NOTES
Sign Company DOES NOT provide primary electrical to sign.
Power to the sign must be done by a licensed electrical contractor or licensed electrician.
Each sign must have: **1.** A minimum of one dedicated 120V 20A circuit
2. Junction box installed within 6 feet of sign
3. Three wires: Line, Ground, Neutral

Note: Replace all information in red below using your numbering system and client information

Speed King Bros, Inc.
411 7th St. W
Palmetto, FL 34221
(941) 722-7446

Client Name: Storage Building Co
Location: 1111 3rd Ave W Suite #308 Bradenton, FL 34205

Start Date: 10/04/2024
Last Revision: 10/04/2024
Job#: I24100481788.
Drawing#: I24100481788. v1
Page: 1 of 2

Amanda Norman 10/15/2024
• Client Approval
• Landlord Approval 10/15/2024

Sales Rep: Nick
Designer: Nick

LISTED All electrical components and signs installed by Speed King Bros, inc are UL Listed

© COPYRIGHT 2024, BY SPEED KING BROS, INC •ALL DESIGNS PRESENTED ARE THE SOLE PROPERTY OF SPEED KING BROS, INC , AND MAY NOT BE REPRODUCED IN PART OR WHOLE WITHOUT WRITTEN PERMISSION FROM SPEED KING BROS, INC .

General Notes: • Design is in accordance with the requirements of the **Fla Bldg Code 8th Ed (2023)** for use within & outside the High Velocity Hurricane Zone (HVHZ). • This engineering certifies only the structural integrity of those systems, components, and/or other construction explicitly specified herein. • Electrical notes, details, & specifications are provided by and are the sole responsibility of the electrical contractor. No electrical review has been performed and no certification of such is intended. • Structural design meets requirements of ACI 318-19, AISC 360-16, ADM1-20, & NDS-18, as applicable. • Steel components shall be coated, painted, or otherwise protected against corrosion per FBC Sec 2203.2/2222.6. • Alum components in contact with steel or embedded in concrete shall be painted or protected as prescribed in ADM1-20(1a), or plastic/neoprene spacers provided. • All exposed fasteners shall be S.S. or have a protective coating for corrosion protection. • All welding shall be per AWS requirements. • Steel welds: E70xx electrodes. • Aluminum welds: 4043 filler alloy. • Alum extrusions: 6063-T6 or stronger, U.N.O.

Front-Lit Channel Letters w/ LED Illumination • Individually Mounted • Storage Building Co. • Bradenton • FL



This item has been digitally signed and sealed by Christian Langley PE on the date adjacent to the seal.
Printed copies of this document are not considered signed and sealed and the signature must be verified on any electronic copies.
Serial: 51 A6 FC E1 40 BB 1B 57 18 07 E8 4F

CHRISTIAN LANGLEY LICENSE No. 67382 STATE OF FLORIDA PROFESSIONAL ENGINEER
NOV 14 2024
ENGINEER'S SIGNATURE



A Front-Lit, Plex-Face Channel Letters w/ LED, Individually Mounted • Front View

SCALE: 0/0" = 1' 0" • For Production / For Presentation

INTERNALLY ILLUMINATED PLASTIC FACE CHANNEL LETTERS

QUANTITY: ONE (1)
Overall Height: 2'-5"
Overall Length: 10'-0"
Total Sq.Ft.: 24.16 ft²
Returns: Black
Backs: White
Trimcap: Black
Face: White
First-surface translucent vinyl: Orangs and Day/Night Black
Illumination: White LED

NOTES:
• Individually Mounted
• Low voltage wiring to pentrate staircase wall and be hidden inside of a hat channel for aesthetics. Sign to be wired to existing main sign disconnect on interior staircase wall. Additional exterior disconnects to be places on channel letter.

ANCHOR SCHEDULE

ALL FASTENERS SHALL BE SPACED EVENLY

WALL MATERIAL	ANCHOR TYPE	QTY or SPACING
CONCRETE (3ksi) or HOLLOW MASONRY	1/4" THREADED RODS WITH MIN 2" EMBED IN ADHESIVE	- - - -NOT- - - -APPLICABLE-
	1/4" TAPCONS (OR EQUIV) WITH 1.75" EMBED	MIN (3) PER LTR/LOGO
	1/4" EXPANSION ANCHORS WITH 2.5" EMBED	MIN (3) PER LTR/LOGO
1/2" PLYWOOD (NO ACCESS BEHIND)	1/4" TOGGLE BOLTS	MIN (3) PER LTR/LOGO
	1/4" WOOD SCREWS, FULL EMBED	MIN (3) PER LTR/LOGO
METAL STUDS OR METAL PANELS	#14 METAL SCREWS TO MIN 18ga STEEL OR 0.090" ALUM	MIN (3) PER LTR/LOGO
HOLLOW WALL (BLOCKING BEHIND)	1/4" THRUBOLTS OR LAGS TO SOLID BLOCKING BEHIND	MIN (3) PER LTR/LOGO

CHANNEL LETTER - TYPICAL SECTION - FRONT-LIT PLASTIC FACE

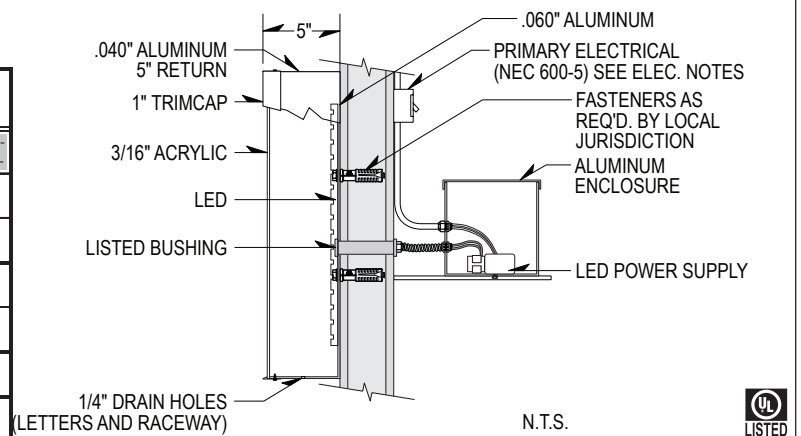

ELECTRICAL NOTES
Sign Company DOES NOT provide primary electrical to sign.
Power to the sign must be done by a licensed electrical contractor or licensed electrician.
Each sign must have: **1.** A minimum of one dedicated 120V 20A circuit
2. Junction box installed within 6 feet of sign
3. Three wires: Line, Ground, Neutral

Note: Replace all information in red below using your numbering system and client information

Speed King Bros, Inc.
411 7th St. W
Palmetto, FL 34221
(941) 722-7446

Client Name:
Storage Building Co
Location:
1111 3rd Ave W Suite #308
Bradenton, FL 34205

Start Date: 10/04/2024
Last Revision: 10/04/2024
Job#: I24100481788.
Drawing#: I24100481788. v1
Page: 1 of 2

• ---------- Client Approval

• ---------- Landlord Approval

Sales Rep: Nick
Designer: Nick

LISTED All electrical components and signs installed by Speed King Bros, inc are UL Listed

© COPYRIGHT 2024, BY SPEED KING BROS, INC •ALL DESIGNS PRESENTED ARE THE SOLE PROPERTY OF SPEED KING BROS, INC , AND MAY NOT BE REPRODUCED IN PART OR WHOLE WITHOUT WRITTEN PERMISSION FROM SPEED KING BROS, INC .

General Notes: • Design is in accordance with the requirements of the **Fla Bldg Code 8th Ed (2023)** for use within & outside the High Velocity Hurricane Zone (HVHZ). • This engineering certifies only the structural integrity of those systems, components, and/or other construction explicitly specified herein. • Electrical notes, details, & specifications are provided by and are the sole responsibility of the electrical contractor. No electrical review has been performed and no certification of such is intended. • Structural design meets requirements of ACI 318-19, AISC 360-16, ADM1-20, & NDS-18, as applicable. • Steel components shall be coated, painted, or otherwise protected against corrosion per FBC Sec 2203.2/2222.6. • Alum components in contact with steel or embedded in concrete shall be painted or protected as prescribed in ADM1-20(1a), or plastic/neoprene spacers provided. • All exposed fasteners shall be S.S. or have a protective coating for corrosion protection. • All welding shall be per AWS requirements. • Steel welds: E70xx electrodes. • Aluminum welds: 4043 filler alloy. • Alum extrusions: 6063-T6 or stronger, U.N.O.

Christian Langley
Florida PE #67382
Cert of Auth #31124
1200 N Federal Hwy, #200
Boca Raton, FL 33432
1-888-371-3113

TORNADO LOADS: Design for Tornado Loads is NOT Required

ASCE 7-22 WIND LOADS: • Sign Height = 30 ft max • V=160 mph • Exposure 'C' • Risk Category 2 Structure • Wall components & cladding: • Kzt=1.0, Kd=0.85, G=0.85 • ASD Load Coeff = 0.6 • Zone 4: ± **36.0 psf** • Zone 5: ± **45.9 psf**

Production Details

Production of:

- Main ID Illuminated Channel Letters
- 29”w x 120”h
- Used SF = 24.2
- Allocated Square Feet:TBD

Production Details:

- Faces = White 3/16 Acrylic
- Media = Tangerine Translucent/Black Day/Night
- Jewelite = Black
- Return = Black
- Return = 5”
- Illumination = White LED
- Mounting = Flush Mount
-Hardware = To Be Determined by Engineer

Installation Details:

- Install according to the proposed image in accordance with local codes and guidelines.

Exterior Sign

24.2 sf TOTAL

TBD’ of allocated square footage



1111 3rd Ave W
Bradenton, FL 34205

ZONE: BR_T5

102 Linear Feet of Frontage
(TBD/sf Allocated)

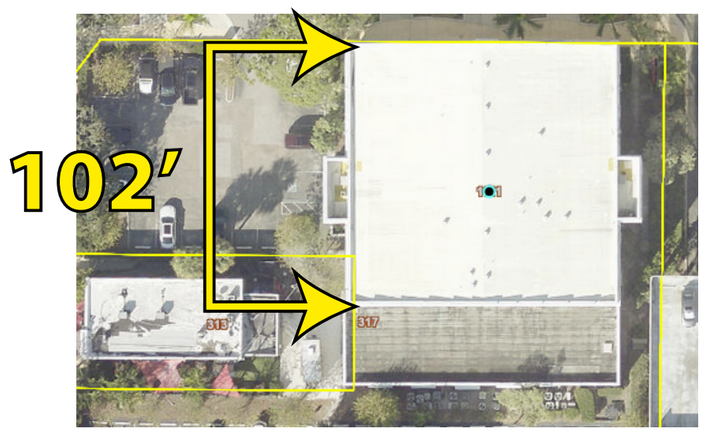

Proposed

*Illustration for placement purposes only.
Actual design and specs are above.



PROJECT INFO CENTER Date:9-25-2024

Phone: 941-722-7446
Email:Nick@speedkingsigns.com
Address: 411 7th st West
Palmetto, FL 34221
Web: www.SpeedKingSigns.com

Customer: Storage Building Company
Project: Main ID Channel Letters(WEST WALL)
Completion Date:TBD
Installation Address: 1111 3rd ave w
Bradenton, FL 34205

CUSTOMER CONTACT INFO

Contact Name: Amanda Norman
Contact Phone:941-374-3561
Contact Email:
anorman@storagebuildingcompany.com

Illuminated Channel Letter-Flush Mounted

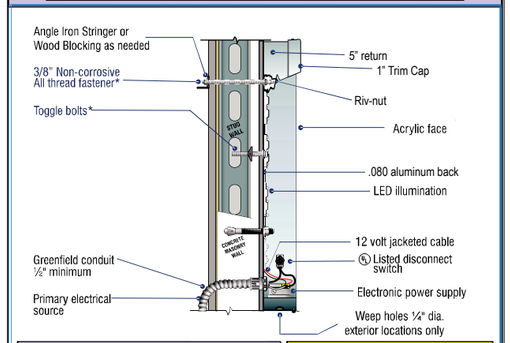

*** ALL LETTERS MUST BE GROUNDED AND BONDED WITH GREEN WIRE**

" This sign is intended to be installed in accordance with the requirements of Article 600 of the National Electrical Code and / or other applicable local codes. This includes proper grounding and bonding of the sign"

1	
2	
3	
4	

UL Listed

SUITABLE FOR WET LOCATIONS
This sign is to be installed in accordance with the requirements of Article 600 of the National electrical code and or other applicable local codes

ALL DESIGNS ARE PROPERTY OF SPEED KING BROS, INC
DESIGNS MAY NOT BE COPIED OR ALTERED WITHOUT WRITTEN APPROVAL. *BY SIGNING THE APPROVAL YOU ARE AGREEING THAT ALL COLORS, SIZES AND SPELLING ARE ACCURATE AND ARE AGREEING TO PAY ALL COST ASSOCIATED WITH LISTED PROJECT

_____Date

_____Customer Signature*

SHEET 1

MOUNTING DETAIL



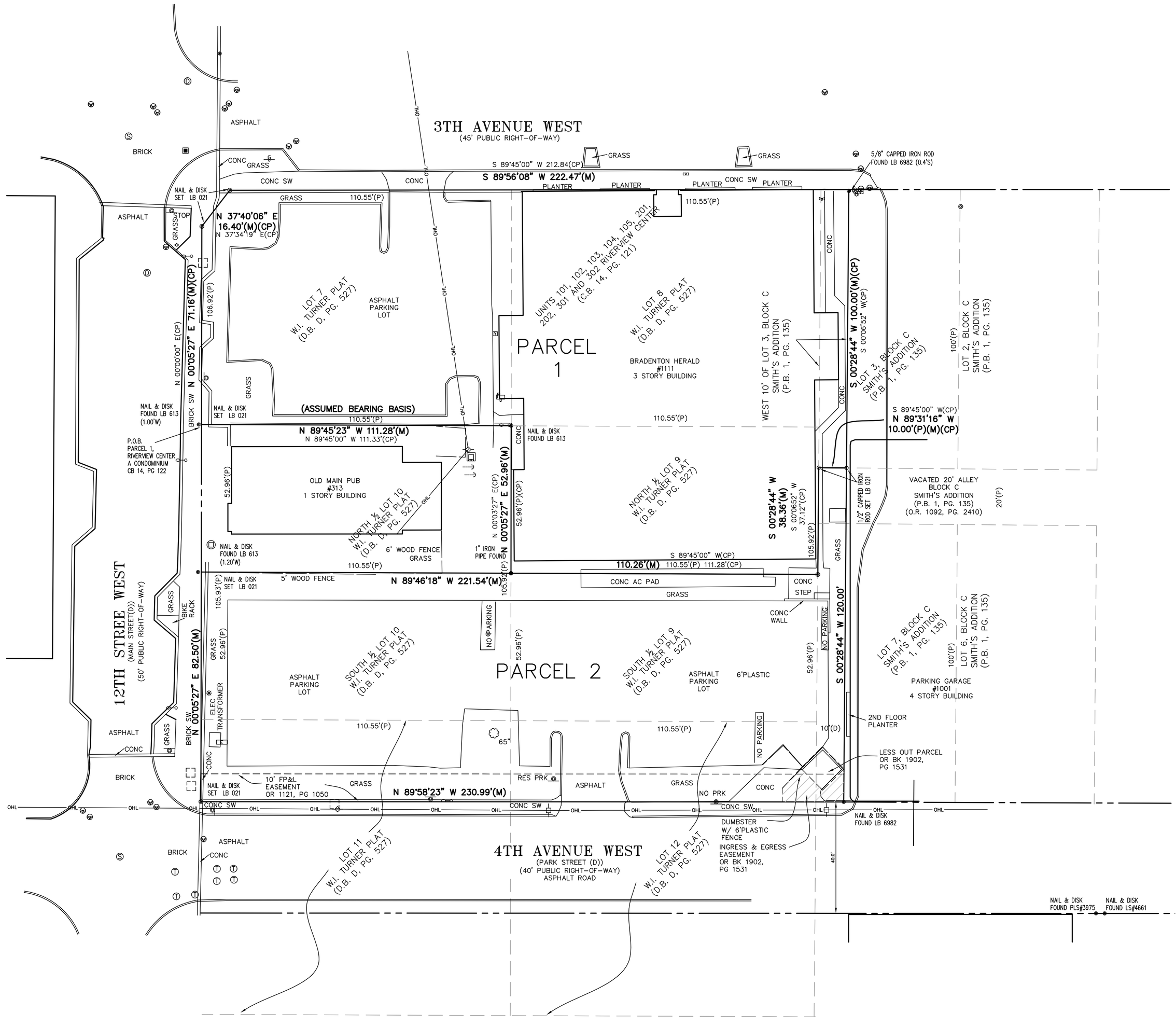

DESCRIPTION:

PARCEL 1: UNITS 101, 102, 103, 104, 105, 201, 202, 301 AND 302, RIVERVIEW CENTER, A CONDOMINIUM, ACCORDING TO THE DECLARATION OF CONDOMINIUM RECORDED IN OFFICIAL RECORDS BOOK 1051, PAGE 2033, AND AS PER PLAT THEREOF RECORDED IN CONDOMINIUM BOOK 14, PAGE 121, OF THE PUBLIC RECORDS OF MANATEE COUNTY, FLORIDA.

PARCEL 2: THE SOUTH ½ OF LOTS 9 AND 10, W.I. TURNER'S PLAT OF BRAIDENTOWN, AS PER PLAT THEREOF RECORDED IN DEED BOOK D, PAGE 527, OF THE PUBLIC RECORDS OF MANATEE COUNTY, FLORIDA, ALSO A LOT BOUNDED ON THE NORTH BY LOTS 9 AND 10 OF SAID TURNER'S PLAT, ON THE EAST BY HARRIS LOT, ON THE SOUTH BY PARK STREET; ON THE WEST BY MAIN STREET, AS SHOWN ON SAID TURNER PLAT. ALSO THE WEST 10 FEET OF LOT 7, BLOCK C, SMITH'S ADDITION TO BRAIDENTOWN, RECORDED IN PLAT BOOK 1, PAGE 135, ALL OF THE PUBLIC RECORDS OF MANATEE COUNTY, FLORIDA. ALSO PART OF A 20 FOOT WIDE ALLEY VACATED BY RESOLUTION 84-85, RECORDED IN OFFICIAL RECORDS BOOK 1092, PAGE 240.

LESS THAT PORTION CONVEYED BY DEED RECORDED IN OFFICIAL RECORDS BOOK 1902, PAGE 1531, DESCRIBED AS FOLLOWS:

COMMENCE AT THE SOUTHWEST CORNER OF LOT 7, BLOCK C, SMITH'S ADDITION TO BRAIDENTOWN, AS PER PLAT THEREOF RECORDED IN PLAT BOOK 1, PAGE 135 OF THE PUBLIC RECORDS OF MANATEE COUNTY, FLORIDA; THENCE N89°45'00"E, ALONG THE SOUTH LINE OF SAID LOT 7, ALSO BEING THE NORTH RIGHT-OF-WAY LINE OF 4TH AVENUE WEST, A DISTANCE OF 10.00 FEET TO THE SOUTHEAST CORNER OF THE WEST 10.00 FEET OF SAID LOT 7; THENCE N00°18'25"E, ALONG THE WEST LINE OF SAID WEST 10.00 FEET, A DISTANCE OF 11.95 FEET TO THE MOST EASTERLY CORNER POST OF A FENCE ENCLOSURE SURROUNDING A CONCRETE DUMPSTER PAD, SAID MOST EASTERLY CORNER POST BEING THE POINT OF BEGINNING; THENCE AROUND THE OUTSIDE EXTREMITIES OF SAID FENCE ENCLOSURE, INCLUSIVE OF ALL FENCE POSTS, THE FOLLOWING FOUR COURSES AND DISTANCES: N45°06'11"W, 11.10 FEET; THENCE S44°53'49"W, 10.90 FEET; THENCE S45°06'11"E, 11.10 FEET; THENCE N44°53'49"E, 10.90 FEET TO THE POINT OF BEGINNING.

SURVEYOR'S REPORT:

1. BEARING ARE BASED ON THE SOUTH LINE OF LOT 7, W. I. TURNER PLAT, D.B. D, PG 527, PUBLIC RECORDS OF MANATEE COUNTY, FLORIDA, AS N 89°45'23" W (ASSUMED).

2. THIS SURVEY HAS BEEN PREPARED WITH THE BENEFIT OF A OLD REPUBLIC NATIONAL TITLE INSURANCE COMPANY TITLE COMMITMENT, FILE NO. 15039115 WITH AN EFFECTIVE DATE OF JUNE 30, 2015 AT 8:00AM.

3. THE LOCATION OF UTILITIES, FOUNDATIONS OR STRUCTURES, IF ANY, BENEATH THE SURFACE HAS NOT BEEN DETERMINED, EXCEPT AS SHOWN.

4. THERE ARE NO VISIBLE ENCROACHMENTS EXCEPT AS SHOWN. FOUNDATIONS BENEATH THE SURFACE OF THE GROUND THAT MAY ENCROACH HAVE NOT BEEN LOCATED.

5. REUSE OF DOCUMENTS: THIS DOCUMENT IS AN INSTRUMENT OF SERVICE IN RESPECT OF THE PROJECT TO WHICH IT APPLIES AND ANY REUSE WITHOUT WRITTEN VERIFICATION OR ADAPTATION BY GEORGE F. YOUNG, INC. (GFY) FOR THE SPECIFIC PURPOSES INTENDED WILL BE AT THE USER'S SOLE RISK AND WITHOUT LIABILITY OR LEGAL EXPOSURE TO GFY AND USER SHALL INDEMNIFY AND HOLD HARMLESS GFY FROM ALL CLAIMS, DAMAGES, LOSSES AND EXPENSES INCLUDING ATTORNEYS FEES ARISING OUT OF OR RESULTING THEREFROM. ANY SUCH VERIFICATION OR ADAPTATION WILL ENTITLE GFY TO FURTHER COMPENSATION AT RATES TO BE AGREED UPON BY USER AND GFY.

6. THE EXPECTED USE OF THE LAND, AS CLASSIFIED IN THE FLORIDA STANDARDS OF PRACTICE (5J-17-F.A.C.), IS COMMERCIAL. THE MINIMUM RELATIVE DISTANCE ACCURACY FOR THIS TYPE OF BOUNDARY SURVEY IS 1 FOOT IN 10,000 FEET. THE ACCURACY OBTAINED BY MEASUREMENT AND CALCULATION OF A CLOSED GEOMETRIC FIGURE FOR THIS SURVEY WAS FOUND TO EXCEED THIS REQUIREMENT.

7. THIS SURVEY REPRESENTS A FIELD SURVEY PERFORMED ON JULY 10, 2015 AND THAT IT MEETS THE STANDARDS OF PRACTICE FOR SURVEYING IN THE STATE OF FLORIDA AS SET FORTH BY THE FLORIDA BOARD OF LAND SURVEYORS, PURSUANT TO CHAPTER 472 OF THE FLORIDA STATUTES AND CHAPTER 5J-17 OF THE FLORIDA ADMINISTRATIVE CODE.

8. THIS SITE SUBJECT TO ALL RESTRICTIONS, RIGHTS OF WAY AND EASEMENTS OF RECORD, IF ANY.

9. THIS IS A BOUNDARY SURVEY.

10. OWNERSHIP OF FENCES IF ANY HAS NOT BEEN DETERMINED.

ABBREVIATIONS LEGEND

AC = AIR CONDITIONER
BK = BOOK
CB = CONDOMINIUM BOOK
(CP) = CONDOMINIUM PLAT
CONC = CONCRETE
D.B. = DEED BOOK
FP&L = FLORIDA POWER & LIGHT
LB = LICENSED BUSINESS
LS = LAND SURVEYOR
(M) = MEASURED
NO. = NUMBER
(OA) = OVER ALL
OHL = OVER HEAD LINE
OR = OFFICIAL RECORD
(P) = PLAT
PB = PLAT BOOK
P.O.B = POINT OF BEGINNING
PG = PAGE
PLS = PROFESSIONAL LAND SURVEYOR
PRK = PARKING
RES PRK = RESERVED PARKING
SW = SIDEWALK

SYMBOL LEGEND

- IRON PIPE FOUND
- CAPPED IRON ROD FOUND
- CAPPED IRON ROD SET
- NAIL & DISK FOUND
- NAIL & DISK SET
- GRATE INLET
- DRAINAGE SEWER MANHOLE
- YARD DRAIN
- MAIL BOX
- STREET SIGN
- WIRE PULL BOX
- OAK TREE
- CABLE TV BOX
- CLEANOUT
- CONCRETE LIGHT POLE
- CONCRETE POWER POLE
- FIRE HYDRANT
- GUY WIRE
- ELECTRIC METER
- SANITARY SEWER MANHOLE
- TELEPHONE MANHOLE
- METAL LIGHT POLE
- WATER METER
- WATER VALVE COVER
- WATER VALVE
- GAS WITNESS POST
- WOOD POWER POLE

REVISED	NO.	BY	DATE	DESCRIPTION
	1			
	2			
	3			
	4			
	5			
	6			
	7			
	8			
	9			
	10			

	INITIALS	DATE
CREW CHIEF	7/7/15	BC
DRAWN	JLB	7/17/15
CHECKED	PL	7/20/15
FIELD BOOK	376/36	
FIELD DATE	7/7/15	

PREPARED FOR:
FOCUS COMMERCIAL REAL ESTATE
1990 MAIN STREET, SUITE 801
SARASOTA, FL 34236
941-254-1875

George F. Young, Inc.
10540 PORTAL CROSSING, SUITE 105 BRADENTON, FLORIDA 34211
PHONE (941) 747-2981 FAX (941) 747-7234
BUSINESS ENTITY LB21
ARCHITECTURE•ENGINEERING•ENVIRONMENTAL•LANDSCAPE•PLANNING•SURVEYING•UTILITIES
GAINESVILLE•LAKEWOOD RANCH•ORLANDO•PALM BEACH GARDENS•ST. PETERSBURG•TAMPA
Since 1919

F. PETER LUTZ, JR. PSM LS5506
DATE

BRADENTON HERALD
BOUNDARY SURVEY
SECTION 26, TOWNSHIP 34S., RANGE 17E.

JOB NO. 15002300LS
SHEET NO. S1 OF S1

PLOTTED: 07/21/15 14:44:46 LOGIN: JBROWN FILE: L:\PROJECTS\all\2015\15002300LS\DWG\15002300LS01.DWG

City of Bradenton
Planning and Community Development
Planning Commission
April 16, 2025

Staff Report

Case Number:	PLN-FBA-25-0002
Applicant:	Nicholas St. John, agent for Storage Building Company
Owner:	River View Complex LLC
Address:	1111 3rd Avenue West, Bradenton, FL 34205
Ward:	3
Current Zoning:	T-5 (Urban Center)
Future Land Use:	Urban Core
Flood Zone:	X
Surrounding Property:	
Zoning:	North and East: T-6 (Urban Core)
	South: T-5
	West: T-5
Future Land Use:	Urban Core

SUMMARY OF REQUEST

The applicant is requesting approval to install an additional wall sign on the western façade of a building in the T-5 Urban Center transect zoning district. Form Based Code Section 4.12.5.c states that projects in T-5 are allowed "Wall Signs, maximum of 1 per Façade visible from common travel ways with a maximum area of 2 square feet per linear foot of the side of the building on which the sign is to be placed, not to exceed 60 square feet and 3 feet in height."

Figure 1 Building Size



Figure 1 shows the size of the façade of the building, which has approximately a 102’ frontage.

Figure 2 Proposed Signage and Dimensions

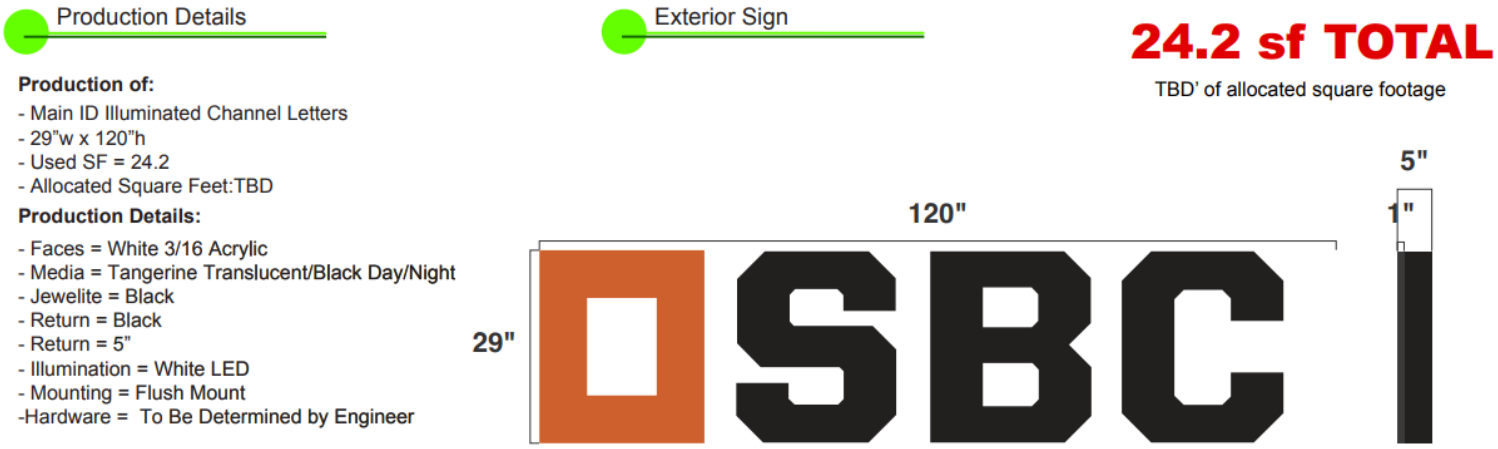

Figure 2 shows what the proposed sign will look like, including the dimensions. The proposed signs are approximately 24.2 square feet.

The subject request is for an adjustment from the Form Based Code (FBC) Section 4.12, more specifically to Section 4.12.5.c

The subsections state:

4.12.5.c Specific to zones T4-O, T5

> c. Wall Signs, maximum of 1 per Façade visible from common travel ways with a maximum area of 2 square feet per linear foot of the side of the building on which the sign is to be placed, not to exceed 60 square feet and 3 feet in height.

ANALYSIS and RECOMMENDATION:

The Form Based Code states the following criteria for review of adjustments for non-governmental uses:

1.10.6.b Approval Criteria for "Non-Government" Uses

b. Adjustment requests for uses that are not uniquely governmental such as apartments/condominiums, hotels/motels, retail/service shops, or office buildings (regardless of ownership) will be approved with changes, or approved with conditions if the PCD Director or applicable review body finds that the applicant has shown that approval criteria "i" through "iii" have been met. Adjustment requests will be denied if the applicant has not demonstrated to the satisfaction of the PCD Director or applicable review body that the criteria have been met.

i. Granting the Adjustment will promote the same general level of land use compatibility as the otherwise applicable standards; and
ii. Granting the Adjustment will not materially affect adjacent land uses and the physical character of uses in the immediate vicinity of the proposed development because of inadequate buffering, screening, setback and other land use considerations; and
iii. Granting the Adjustment will be generally consistent with the purpose and intent of the Form-Based Code and the existing LURs, where applicable.

Staff finds that this request does not interfere with general land use compatibility, will not materially affect adjacent land uses and the physical character of the surrounding area, and is generally consistent with the purpose and intent of the Form Based Code and existing Land Use Regulations.

While the applicant is asking for deviations from the signage regulations, the proposal appears to meet the overall intent of the Form Based Code. The proposed sign does not create excessive clutter and the size is reasonable given the large size of the façade where it will be located. The request meets the criteria stated in 1.10.6.b of the Form Based Code. Staff encourages the Board to take all of the information from this report along with any presentations by the applicant and community feedback to render its decision on the subject request.

Respectfully submitted,

Brandon Wink

Brandon Wink
Planner
City of Bradenton Planning and Community Development

RELEVANT CODE REFERENCES:

Form Based Code

1.10.2 Authority to Adjust Regulations

a. PCD Director. Unless listed below in subsection b, all regulations in the Form Based Code Zone Districts may be modified by the PCD Director using the procedure set forth in Section 1.10.3 and the criteria set forth in Section 1.10.6.

b. Architectural Review Board or Planning Commission. Adjustments for the following items shall require approval in conformance with Sections 1.10.3 and 1.10.4 and using criteria set forth in Section 1.10.6:

   v. Signs prohibited under Section 4.12 "Signage Standards" and Section 5.5 City of Bradenton LURs.

1.10.3 Authority and Procedure

a. Application Requirements. An application for an adjustment shall be accompanied by documentation that establishes how the applicant meets the criteria of an adjustment and other relevant sections of the FBC.

b. Staff Review and Report.
   i. The Department of Planning and Community Development shall review the application for the adjustment and may request comments of members of the Development Review Committee (DRC), and shall prepare a written staff analysis of the issues raised by the application.
   ii. In conjunction with final project approval, the PCD Director is authorized to grant adjustments from all regulations in the Form Based Code except for those set forth in Section 1.10.2.b
   iii. All other adjustments require approval from the ARB for adjustments related to building, or the Planning Commission for those regarding site plan elements. The PCD Director shall make a recommendation based on review criteria.

1.10.4 Architectural Review board or Planning Commission Action

a. If a request for an adjustment exceeds the authority of the PCD Director (defined in 1.10.2.a), then the request shall be referred to the ARB or Planning Commission for initial consideration. In either event, the ARB or the Planning Commission shall conduct a de novo public

hearing, which shall be advertised and conducted in accord with Section 2.3 of the City of Bradenton LURs. The ARB or Planning Commission shall review the proposed Adjustment, shall consider the written staff analysis and the testimony at the public hearing, and shall grant with conditions, or deny the application. The request for an Adjustment shall not subject the entire application for development approval to a public hearing unless otherwise required by this Code, but only that portion necessary to rule on the issue under consideration.

b. The ARB or Planning Commission shall make findings that the criteria of these regulations have or have not been satisfied by the Applicant.

c. Action taken by the ARB or Planning Commission to grant an Adjustment or to grant an Adjustment with conditions or safeguards shall be documented in the form of a resolution containing a legal description of the real property to which the Adjustment applies, together with the terms of the Adjustment, and any additional conditions or safeguards imposed

1.10.6.b Approval Criteria for "Non-Government" Uses

b. Other "Non-Government" Uses. Adjustment requests for uses that are not uniquely governmental such as apartments/condominiums, hotels/motels, retail/service shops, or office buildings (regardless of ownership) will be approved with changes, or approved with conditions if the PCD Director or applicable review body finds that the applicant has shown that approval criteria "i" through "iii" have been met. Adjustment requests will be denied if the applicant has not demonstrated to the satisfaction of the PCD Director or applicable review body that the criteria have been met.

i. Granting the Adjustment will promote the same general level of land use compatibility as the otherwise applicable standards; and
ii. Granting the Adjustment will not materially affect adjacent land uses and the physical character of uses in the immediate vicinity of the proposed development because of inadequate buffering, screening, setback and other land use considerations; and
iii. Granting the Adjustment will be generally consistent with the purpose and intent of the Form-Based Code and the existing LURs, where applicable.

4.12 Signage Standards

4.12.1 General to zones T3, T4-R, T4-O, T5, T6

a. There shall be no signage permitted additional to that specified in this section.

b. The address number, no more than 6 inches measured vertically, shall be attached to the building in proximity to the Principal Entrance or at a mailbox.

4.12.5 Specific to zones T4-O, T5

a. Projecting signs, not to exceed 6 square feet for each separate business entrance, may be attached to and should be perpendicular to the Façade, and shall clear 9 feet above the Sidewalk.

b. A single external permanent sign band, or two parallel, horizontal expression lines that run the length of the Façade and that define an upper and lower frame for signs may be applied to the Façade of each building, providing that such sign not exceed 3 feet in height.

c. Wall Signs, maximum of 1 per Façade visible from common travel ways with a maximum area of 2 square feet per linear foot of the side of the building on which the sign is to be placed, not to exceed 60 square feet and 3 feet in height.

d. Ground Signs (Monument or Pylon), maximum 1 per lot that exceeds 30 feet in width. Ground Signs may not exceed 50 square feet and 10 feet in height.

e. Electronic Message Signs may be allowed in conjunction with permitted signs only in office, commercial, or institutional areas upon administrative approval by the PCD Director in regard to location, size, and compatibility. The following standards shall apply to all Electronic Message Signs:

   i. Maximum one (1) electronic message sign.
   ii. Messages or information shall not be changed more than one time in a fifteen (15) second period.
   iii. Signs shall have an automatic dimmer and a photo cell sensor to adjust the illumination intensity of the sign as to not cause glare or impair the vision of the motorist.
   iv. Signs shall not exceed a maximum illumination of 7,500 nits (can - delas per square meter) during daylight hours and a maximum illumination of 500 nits between dusk and dawn measured from the signs face at maximum brightness.

Land Use Regulations:

Please note that sections 2.2.8 and 2.2.8.1 are just a guide to assist in the Boards consideration of the proposed request.

2.2.8 Variance. A variance is permission granted by the planning commission to depart from a dimensional requirement of these LURs. Variances are allowed to relieve a property owner who, because of property characteristics beyond his or her control, is unable to meet a dimensional requirement of these LURs. Waivers granted by the PCD director as allowed in various sections of these LURs are exempt from this subsection.

2.2.8.1 *Eligibility.* A property owner who finds that a characteristic of his or her land or buildings makes it impossible or difficult to meet a dimensional requirement of these LURs may apply for a dimensional variance if:

a. The application meets all of the following criteria:

i. The need for the dimensional variance was not created by the applicant's or previous owner's action, such as improper lot division, in violation of these LURs or previously effective land use regulations

ii. Strict application of the provisions of these LURs would deprive the applicant of a reasonable use of his property, cause him unnecessary hardship, or deprive him or her of rights commonly enjoyed by other property owners in the same land use atlas district, and

iii. The granting of the dimensional variance would not confer on the applicant any special privilege denied to other property owners in the same land use atlas district; and

iv. The application is for a dimensional variance and would not authorize a use otherwise prohibited by these LURs, and

v. The dimensional variance is the minimum variance that will allow reasonable use of the property.

5.5.1 Purpose and Intent. It is the purpose of this section to promote public health, safety and welfare of the City of Bradenton through reasonable, consistent and non-discriminatory sign standards. In order to preserve and enhance the city as a desirable community in which to live, visit, and do business, a pleasing, visually attractive environment is of foremost importance. The regulation of signs within the city is a highly contributive means by which to achieve this desired end. The sign regulations in this Section are not intended to censor speech or to regulate

viewpoints, but instead are intended to regulate the secondary effects of speech and especially insofar as those secondary effects may adversely affect aesthetics and traffic and pedestrian safety, and to accomplish the following:

5.5.1.1 Encourage the effective use of signs as a means of communications in the city;

5.5.1.2 Maintain and enhance the visual and aesthetic environment and thereby the city's ability to attract sources of economic development and growth, including enhancing the tourism industry;

5.5.1.3 Foster the integration of signage with architectural and landscape designs;

5.4.1.4 Preserve, conserve, protect, and enhance the aesthetic quality, historic resources, and scenic beauty of the city;

5.5.1.5 Lessen the visual clutter that may otherwise be caused by the proliferation, improper placement, illumination, animation, excessive height, and excessive size (area) of signs which compete for the attention of pedestrian and vehicular traffic;

5.5.1.6 Minimize the possible adverse effect of signs on nearby public and private property;

5.5.1.7 Regulate the appearance and design of signs in a manner that promotes and enhances the beautification of the city and that compliments the natural surroundings in recognition of this city's reliance on its natural surroundings and beautification efforts in retaining economic advantage for its resort community, as well as, for its major office and industrial parks, gateways, downtown and waterfront areas, and overlay districts;

5.5.1.8 Allow signs that are compatible with their surroundings and aid orientation, while precluding the placement of signs that contribute to sign clutter or that conceal or obstruct adjacent land uses or signs;

5.5.1.9 Improve pedestrian and traffic safety;

5.5.1.10 Regulate signs in a manner so as to not interfere with, obstruct the vision of or distract motorists, bicyclists or pedestrians;

5.5.1.11 Except to the extent expressly preempted by state or federal law, ensure that signs are constructed, installed and maintained in a safe and satisfactory manner, and protect the public from unsafe signs;

5.5.1.12 Encourage and allow signs that are appropriate to the land use atlas district in which they are located and consistent with the category of use and function to which they pertain;

5.5.1.13 Curtail the size and number of signs to the minimum reasonably necessary to identify a residential or business location and the nature of any such business;

5.5.1.14 Establish sign size in relationship to the scale of the lot and building on which the sign is to be placed or to which it pertains;

5.5.1.15 Categorize signs based upon the function that they serve and tailor the regulation of signs based upon their function;

5.5.1.16 Preclude signs from conflicting with the principal permitted use of the site and adjoining signs;

5.5.1.17 Allow for traffic control devices consistent with national standards and whose purpose is to promote highway safety and efficiency by providing for the orderly movement of road users on streets and highways, and that notify road users of regulations and provide warning and guidance needed for the safe, uniform and efficient operation of all elements of the traffic stream;

5.5.1.18 Protect property values by precluding to the maximum extent possible sign types that create a nuisance to the occupancy or use of other properties as a result of their size, height, illumination, brightness, or movement;

5.5.1.19 Protect property values by ensuring that sign types as well as the number of signs, are in harmony with buildings, neighborhoods, and conforming signs in the area;

5.5.1.20 Streamline the approval process b requiring master signage plans; and

5.5.1.21 Enable the fair and consistent enforcement of these sign regulations.

5.5.11 Permitting Requirements

5.5.11.2 Sign Permit. Except for exempt signs, it shall be unlawful for any person to install, alter or cause to be installed or altered within the municipal limits of the city any sign otherwise allowed under this section and visible from a public right-of-way, whether permanent or temporary, without first having obtained a sign permit from the city. The sign permit shall be issued by the city only after determination has been made that the proposed sign fully complies with all conditions of this section.

5.5.11.3 Fees. No permit shall be issued until the appropriate allocation has been filed with the department of planning and community development and the applicable fees have been paid as adopted by the city council, and as amended from time to time.

EXHIBITS

EXHIBIT A: Location
EXHIBIT B: Zoning
EXHIBIT C: Future Land Use
EXHIBIT D: Legal Description

EXHIBIT A

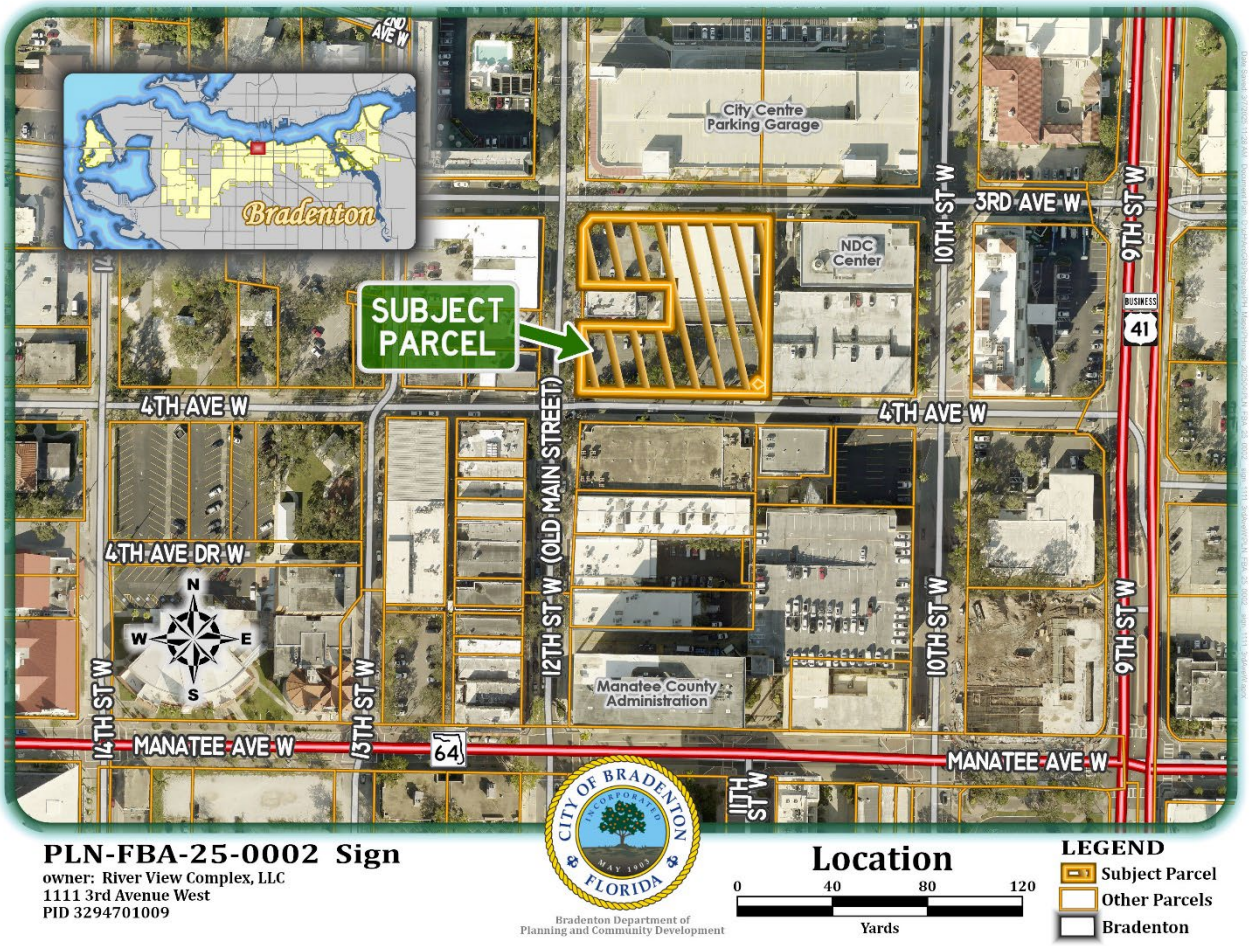

PLN-FBA-25-0002 Sign
owner: River View Complex, LLC
1111 3rd Avenue West
PID 3294701009

Bradenton Department of
Planning and Community Development

EXHIBIT B

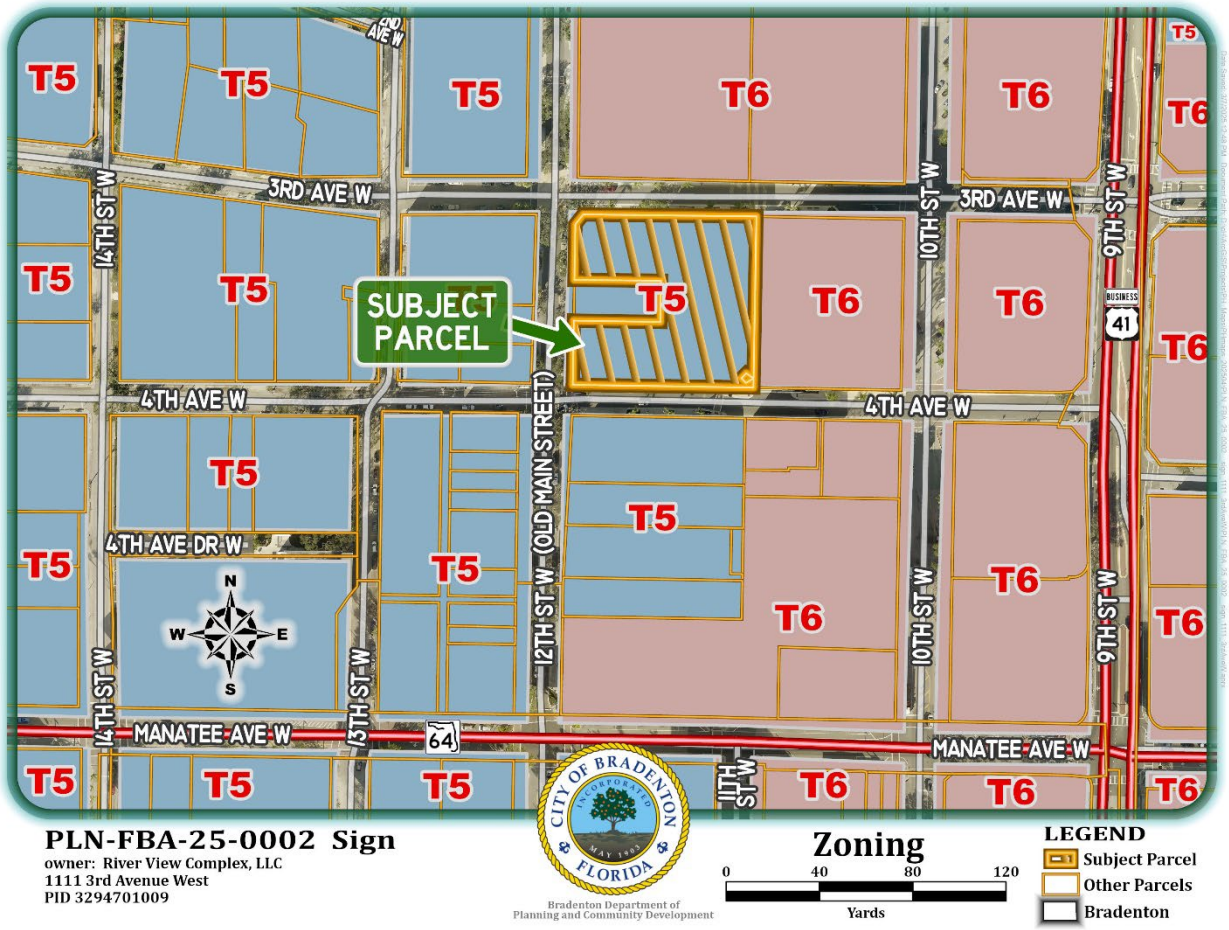
T5
T6
SUBJECT PARCEL
3RD AVE W
4TH AVE W
4TH AVE DR W
MANATEE AVE W
14TH ST W
15TH ST W
12TH ST W (OLD MAIN STREET)
11TH ST W
10TH ST W
9TH ST W
BUSINESS 41
64
N
S
E
W
PLN-FBA-25-0002 Sign
owner: River View Complex, LLC
1111 3rd Avenue West
PID 3294701009
CITY OF BRADENTON
FLORIDA
Bradenton Department of
Planning and Community Development
Zoning
0 40 80 120
Yards
LEGEND
Subject Parcel
Other Parcels
Bradenton

EXHIBIT C

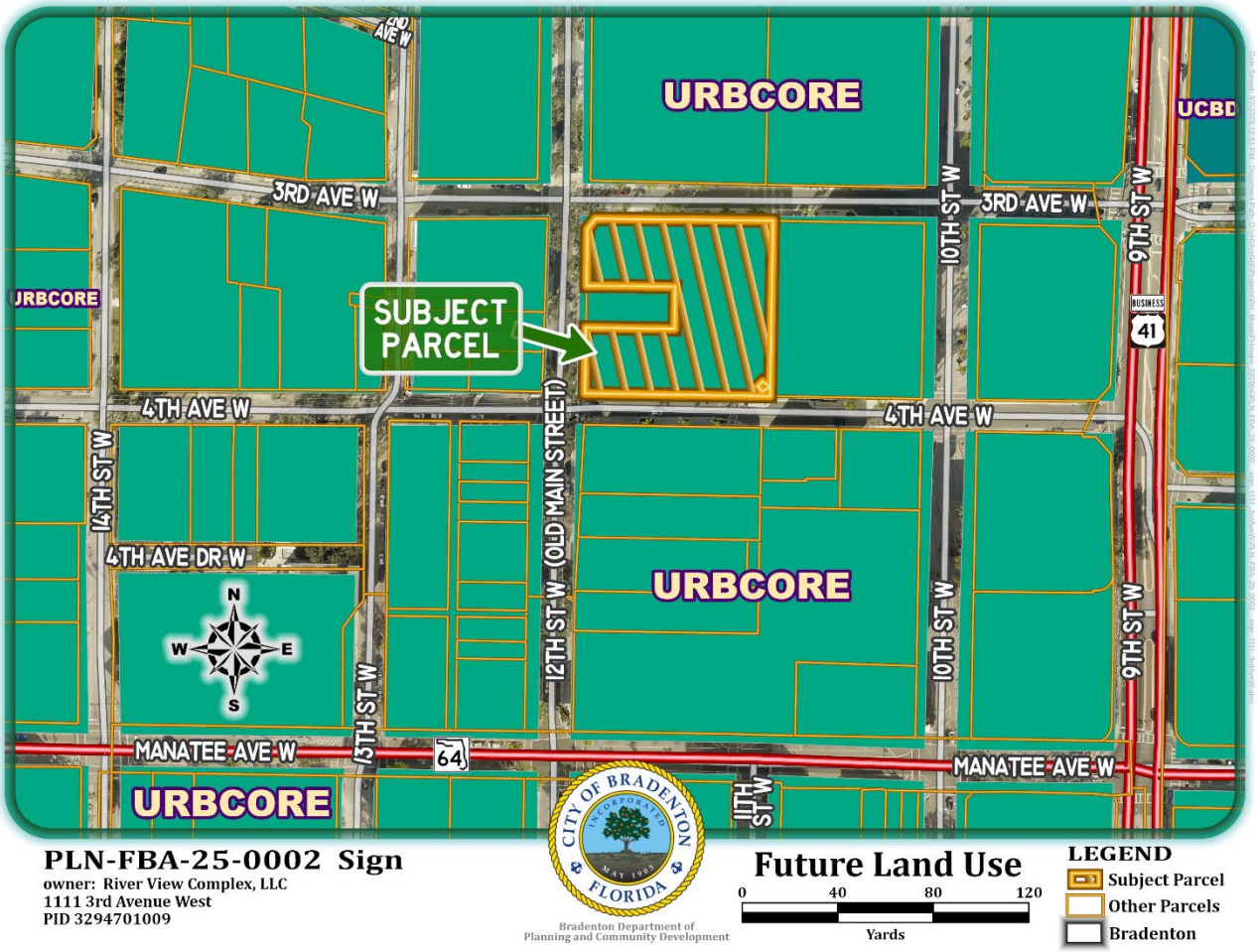
URBCORE
UCBD
3RD AVE W
10TH ST W
9TH ST W
SUBJECT PARCEL
BUSINESS 41
4TH AVE W
14TH ST W
4TH AVE DR W
12TH ST W (OLD MAIN STREET)
13TH ST W
11TH ST W
MANATEE AVE W
64
N
W
E
S
PLN-FBA-25-0002 Sign
owner: River View Complex, LLC
1111 3rd Avenue West
PID 3294701009
CITY OF BRADENTON
INCORPORATED
MAY 1903
FLORIDA
Bradenton Department of
Planning and Community Development
Future Land Use
0
40
80
120
Yards
LEGEND
Subject Parcel
Other Parcels
Bradenton

EXHIBIT D
LEGAL DESCRIPTION

DESCRIPTION:

PARCEL 1: UNITS 101, 102, 103, 104, 105, 201, 202, 301 AND 302, RIVERVIEW CENTER, A CONDOMINIUM, ACCORDING TO THE DECLARATION OF CONDOMINIUM RECORDED IN OFFICIAL RECORDS BOOK 1051, PAGE 2033, AND AS PER PLAT THEREOF RECORDED IN CONDOMINIUM BOOK 14, PAGE 121, OF THE PUBLIC RECORDS OF MANATEE COUNTY, FLORIDA.

PARCEL 2: THE SOUTH ½ OF LOTS 9 AND 10, W.I. TURNER'S PLAT OF BRAIDENTOWN, AS PER PLAT THEREOF RECORDED IN DEED BOOK D, PAGE 527, OF THE PUBLIC RECORDS OF MANATEE COUNTY, FLORIDA, ALSO A LOT BOUNDED ON THE NORTH BY LOTS 9 AND 10 OF SAID TURNER'S PLAT, ON THE EAST BY HARRIS LOT, ON THE SOUTH BY PARK STREET; ON THE WEST BY MAIN STREET, AS SHOWN ON SAID TURNER PLAT. ALSO THE WEST 10 FEET OF LOT 7, BLOCK C, SMITH'S ADDITION TO BRAIDENTOWN, RECORDED IN PLAT BOOK 1, PAGE 135, ALL OF THE PUBLIC RECORDS OF MANATEE COUNTY, FLORIDA. ALSO PART OF A 20 FOOT WIDE ALLEY VACATED BY RESOLUTION 84–85, RECORDED IN OFFICIAL RECORDS BOOK 1092, PAGE 240.

LESS THAT PORTION CONVEYED BY DEED RECORDED IN OFFICIAL RECORDS BOOK 1902, PAGE 1531, DESCRIBED AS FOLLOWS:

COMMENCE AT THE SOUTHWEST CORNER OF LOT 7, BLOCK C, SMITH'S ADDITION TO BRAIDENTOWN, AS PER PLAT THEREOF RECORDED IN PLAT BOOK 1, PAGE 135 OF THE PUBLIC RECORDS OF MANATEE COUNTY, FLORIDA; THENCE N89°45'00"E, ALONG THE SOUTH LINE OF SAID LOT 7, ALSO BEING THE NORTH RIGHT–OF–WAY LINE OF 4TH AVENUE WEST, A DISTANCE OF 10.00 FEET TO THE SOUTHEAST CORNER OF THE WEST 10.00 FEET OF SAID LOT 7; THENCE N00°18'25"E, ALONG THE WEST LINE OF SAID WEST 10.00 FEET, A DISTANCE OF 11.95 FEET TO THE MOST EASTERLY CORNER POST OF A FENCE ENCLOSURE SURROUNDING A CONCRETE DUMPSTER PAD, SAID MOST EASTERLY CORNER POST BEING THE POINT OF BEGINNING; THENCE AROUND THE OUTSIDE EXTREMITIES OF SAID FENCE ENCLOSURE, INCLUSIVE OF ALL FENCE POSTS, THE FOLLOWING FOUR COURSES AND DISTANCES: N45°06'11"W, 11.10 FEET; THENCE S44°53'49"W, 10.90 FEET; THENCE S45°06'11"E, 11.10 FEET; THENCE N44°53'49"E, 10.90 FEET TO THE POINT OF BEGINNING.

AGENDA ITEM NO. 7.d

Item Cover Page

PLANNING COMMISSION MEETING AGENDA ITEM REPORT

DATE:	April 16, 2025
SUBMITTED BY:	Jamie Schindewolf, Planning & Community Development
ITEM TYPE:	Resolution
AGENDA SECTION:	**AGENDA ITEMS**
SUBJECT:	**Final Order PLN-FBA-25-0003, Case PLN-FBA-25-0003:** Request for a Form Based Code Adjustment to permit a 74 square foot wall sign on the west façade, superseding a previous approval of a 60 square foot wall sign on this façade, located at 1001 3rd Avenue West, Bradenton, FL 34205, Parcel ID: 3291400004. Request filed by Caylee Grimes, agent for 3rd Avenue Associates, LLLP.
SUGGESTED ACTION:	Move to recommend either approval or denial of Final Order PLN-FBA-25-0003, Case PLN-FBA-25-0003.

Is this item Quasi-Judicial?
Yes

Does this item require a public hearing?
Yes

EXPLANATION:

The applicant is seeking a Form Based Code Adjustment to permit a 74 square foot wall sign on the west façade, superseding a previous approval of a 60 square foot wall sign on this façade. Form Based Code Section 4.12.6.c states that projects in T-6 are allowed "Wall Signs, maximum of 1 per Façade visible from common travel ways with a maximum area of 2 square feet per linear foot of the side of the building on which the sign is to be placed, not to exceed 60 square feet and 3 feet in height."

FINANCIAL IMPACT:
N/A

ATTORNEY REVIEW/RECOMMENDATION:
Reviewed by Attorney Augello.

SUGGESTED MOTION:
Move to recommend either approval or denial of Final Order PLN-FBA-25-0003.

ATTACHMENTS:
Final Order PLN-FBA-25-0003.pdf
Application.pdf
Staff Report.pdf

FINAL ORDER PLN-FBA-25-0003

A FINAL ORDER OF THE PLANNING COMMISSION OF THE CITY OF BRADENTON APPROVING AN ADJUSTMENT FOR A 74 SQUARE FOOT WALL SIGN ON THE WEST FAÇADE, SUPERSEDING A PREVIOUS APPROVAL OF A 60 SQUARE FOOT WALL SIGN, TO BE LOCATED ON THE WEST FAÇADE, AT PROPERTY LOCATED AT 1001 3RD AVENUE WEST, BRADENTON, FLORIDA

WHEREAS, 3rd Avenue Associates, LLLP, (the "Property Owner"), owns property located at 1001 3rd Avenue West, Bradenton, Florida (the "Property); and

WHEREAS, the City of Bradenton Comprehensive Plan's Future Land Use Map designates the Property as Urban Core; and

WHEREAS, the City of Bradenton Official Zoning Map classifies the Property under the Urban Core (T-6) designation; and

WHEREAS, the City of Bradenton Form Based Code Regulations, Section 1.10 allows for adjustments to be granted by the Director of Planning and Community Development, Planning Commission and/or the Architectural Review Board, depending on the level of the request; and

WHEREAS, the City of Bradenton Form Based Code Regulations, Section 4.12.6 identifies permitted sign types in the T6 zoning districts; and

WHEREAS, the Applicant applied for an adjustment to permit a 74 square foot wall sign on the west façade, superseding a previous approval of a 60 square foot wall sign; and

WHEREAS, the Planning Commission held a noticed public hearing on April 16, 2025 at which the Board received testimony and evidence from the applicant and City Planning staff; and

NOW, THEREFORE, the Planning Commission makes the following Adjustment Appeal Criteria conclusion and issues the Final Order as follows:

Section 1. Approval Criteria. After considering the evidence on the record and that presented at public hearing, including the staff report, applicant presentation and comments from the public, the Planning Commission hereby makes the following Adjustment Appeal Criteria conclusion:

a. The Whereas clauses contained herein are hereby adopted as Adjustment Appeal Criteria.

b. The Applicant is requesting approval of an adjustment to install a 74 square foot wall sign on the west façade, superseding a previous approval of a 60 square foot wall sign shown on the Site Plan attached hereto as Exhibit "A".

c. The City's professional staff provided information to the Planning Commission detailing the proposed projects relationship with the City's Form Based Code, Comprehensive Plan, and Land Use Regulations.

d. Staff recommends approval of the request.

e. The Planning Commission, which is designated as one of the local reviewing agencies for adjustments to the Form Based Code, determined that the project as proposed is consistent with the Form Based Code, Comprehensive Plan, and Land Use Regulations and meets the criteria for approval under the Land Use Regulations.

The proposed use, meets Section 1.10.6 of the Form Based Code, as further described below.

I. Granting the Adjustment will promote the same general level of land use compatibility as the otherwise applicable standards; and
II. Granting the Adjustment will not materially affect adjacent land uses and the physical character of uses in the immediate vicinity of the proposed development because of inadequate buffering, screening, setback and other land use considerations; and
III. Granting the Adjustment will be generally consistent with the purpose and intent of the Form-Based Code and the existing LURs, where applicable.

Section 2. Order. Based upon the foregoing, an Adjustment is hereby approved and issued for the Property, to allow the installation of a 74 square foot wall sign on the west façade, superseding a previous approval of a 60 square foot wall sign, as shown on the Site Plan attached hereto as Exhibit "B".

Section 3. State and Federal Permits. Issuance of this permit by the City does not in any way create any right on the part of the applicant to obtain a permit from a state or federal agency and does not create any liability on the part of the City for issuance of the permit if the applicant fails to obtain requisite approvals or fulfill the obligations imposed by a state or federal agency or undertakes actions that result in a violation of state or federal law. The applicant must obtain all applicable state and federal permits before commencing development or use.

Section 4. Severability. In the event that any portion or section of this Order is determined to be invalid, illegal or unconstitutional by a court of competent

jurisdiction, such decisions shall in no manner affect the remaining portions or sections of the Adjustment Permit which shall remain in full force and effect.

Section 5. Effective Date. This Order shall be effective upon its adoption.

ORDERED ON BEHALF OF THE CITY OF BRADENTON THIS 16TH DAY OF APRIL, 2025.

THE CITY OF BRADENTON, BY AND THROUGH THE PLANNING COMMISSION OF THE CITY OF BRADENTON

ATTEST:

Lori Brunner PCD ADMINISTRATIVE ASSISTANT	Benjamin Bakker Chair, Planning Commission

EXHIBIT A

THAT PART OF BLK C OF SMITH'S ADD TO BRADENTON, AS REC IN PL BK 1, PG 135, PRMCF, LYING E OF THE ELY MOST LN OF RIVERVIEW CENTER, A CONDO, AS REC IN CONDO BK 14, PG 121, PRMCF, & ITS SLY PROLONGATION; SD ELY LN ALSO BEING THE E LN OF THE W 10.00FT OF SD BLK C, BEING MORE PARTICULARLY DESC AS FOLL: BEGIN AT THE SE COR OF SD BLK C, TH S 89 DEG 47 MIN 40 SEC W, ALG THE S LN OF SD BLK C, A DIST OF 191.23 FT TO THE PT OF INTERSECTION OF THE SLY PROLONGATION OF THE ELY MOST LN OF SD RIVERVIEW CENTER CONDO, SD PT ALSO BEING THE SE COR OF THE W 10.00 FT OF SD BLK C, TH N 00 DEG 06 MIN 12 SEC E, A DIST OF 219.67 FT TO THE NE COR OF SD RIVERVIEW CENTER CONDO, SD COR ALSO BEING THE NE COR OF THE W 10.00 FT OF SD BLK C, TH N 89 DEG 39 MIN 01 SEC E, A DIST OF 191.53 FT TO THE NE COR OF SD BLK C, TH S 00 DEG 10 MIN 44 SEC W, A DIST OF 220.15 FT TO THE POB. WHICH LANDS CONSIST OF TWO PARCELS: PARCEL 1 DESC AS: ALL OF LOTS 1,2,4,5,6,& 8, AND LOT 3, LESS THE W 10 FT, AND THE E 30 FT OF LOT 7, BLK C, SMITH'S ADD TO BRADENTON, PER PL BK 1, PG 135, PRMCF. PARCEL 2 DESC AS: THE E 10 FT OF THE W 20 FT OF LOT 7, BLK C, SMITH'S ADD TO BRADENTON, AS REC ON PG 135 OF PL BK 1, PRMCF. TOGETHER WITH THAT PORTION OF VACATED ALLEY LYING ADJACENT THERETO REC OR 1092/2410. (1837/6996) PI#32914.0000/4

EXHIBIT B


Backboard+led channel letter
Ocean Blue
2.5" depth,
acrylic on the have with vinyl 4527 TF Ocean Blue
white acrylic on the face
white acrylic on the face
GOOD LIQUID
DISTILLERY | COCKTAILS | KITCHEN
51"
200"
Front view




GOOD LIQUID
DISTILLERY | COCKTAILS | KITCHEN

Caylee Grimes
Project Manager
3rd Avenue Associates, LLLP
1001 3rd Avenue West
Bradenton, FL 34205
Caylee@ndcdevco.com
803.942.1279
February 24th, 2025

City of Bradenton Planning Commission
401 10th Street West
Bradenton, FL 34205

Subject: Request for Form-Based Code Adjustment – West Facade Signage

To whom it may concern,

I am writing on behalf of NDC Development Company to formally request a Form-Based Code Adjustment to allow for the installation of a sign on the west facade of our building located at [Property Address]. This request is made in accordance with the applicable land use regulations and criteria for adjustments. We respectfully submit that granting this adjustment meets the following required conditions:

1. Land Use Compatibility – The proposed sign will maintain the same general level of land use compatibility as the existing applicable standards. It is designed to complement the architectural character of the building and the surrounding area while adhering to the aesthetic principles of the district.

2. Impact on Adjacent Land Uses – The sign will not materially affect adjacent land uses or the physical character of the immediate vicinity. It will be installed in a manner that ensures adequate buffering, screening, and setbacks, mitigating any potential visual impact. Furthermore, its placement and illumination, if applicable, will be designed to prevent any adverse effects on neighboring properties.

3. Consistency with the Form-Based Code and LURs – The adjustment request aligns with the intent and purpose of the Form-Based Code and the existing Land Use Regulations (LURs). The proposed sign enhances the identity of the development while respecting the community's established urban form and design principles.

Given these considerations, we kindly request your approval of this Form-Based Code Adjustment. We appreciate the opportunity to present our request and are available to provide any additional information or documentation as needed. Please feel free to contact me at your earliest convenience to discuss this matter further.

Thank you for your time and consideration.

Sincerely,
Caylee Grimes
Project Manager
3rd Avenue Associates, LLLP

Backboard+led channel letter



Front view

Front view



Iron expansion to hang

Rod screws on the back of letter

Cable outlet of letters

Draining holes of letters

Back view

Qty: 2 pic
one 110V power supply

2" 3/8 mm

1"1/2 mm



1"1/2 mm



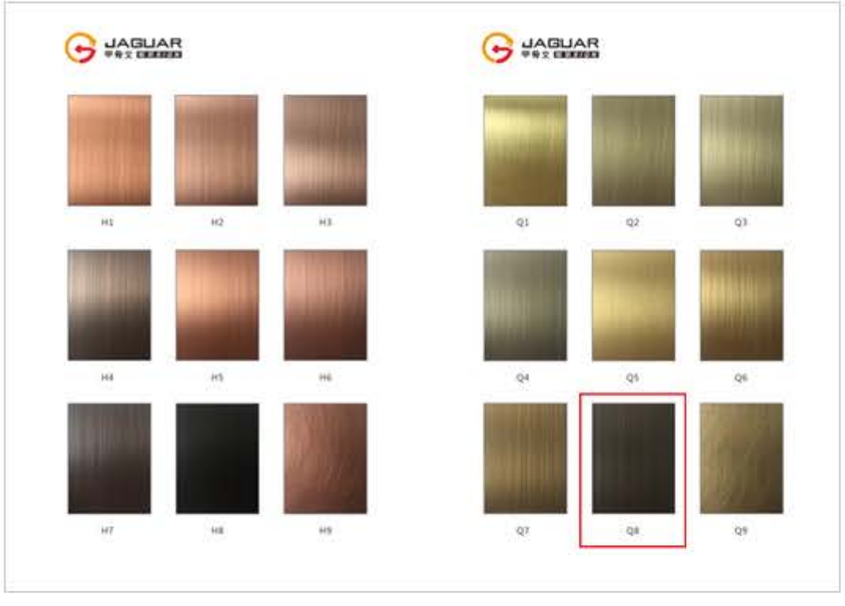


GOOD LIQUID
DISTILLERY | COCKTAILS | KITCHEN
RESERVED
RESERVED
RESERVED


GOOD LIQUID
DISTILLERY | COCKTAILS | KITCHEN

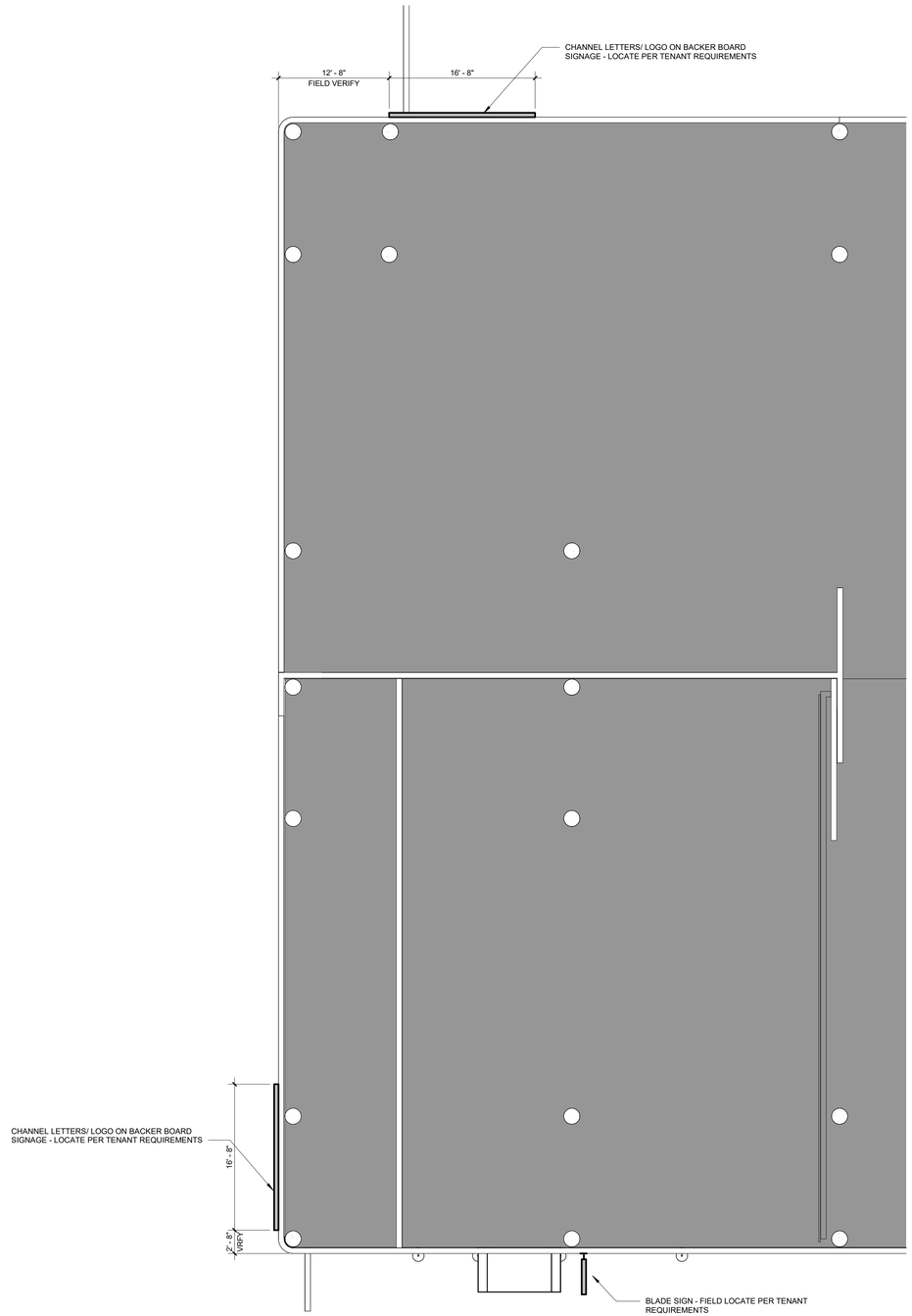

SIGN LOCATION PLAN | 2

1/8" = 1'-0"

SIGNAGE INSTALLATION GENERAL NOTES

1. CONCRETE ANCHORS TO BE STAINLESS STEEL ONLY. GALVANIZED OR PLATED CONNECTORS ARE NOT TO BE USED.
2. FASTENERS ARE TAPCON OR SIMPSON TITEN BOLTS OR EQUAL.
3. CONTRACTOR TO PROVIDE S.S. WASHERS AS REQUIRED.
4. CONTRACTOR TO COORDINATE LOCATION OF SIGN WITH BUILDING OWNER AND TENANT PRIOR TO FINAL INSTALLATION.
5. CONTRACTOR TO TEMPLATE DRILL POINTS PRIOR TO INSTALLATION.
6. IF FIELD CONDITIONS ARE DIFFERENT THAT REPRESENTED, CONTRACTOR TO CONTACT ARCHITECT IMMEDIATELY AND PRIOR TO INSTALLATION OF ALL SIGNAGE.

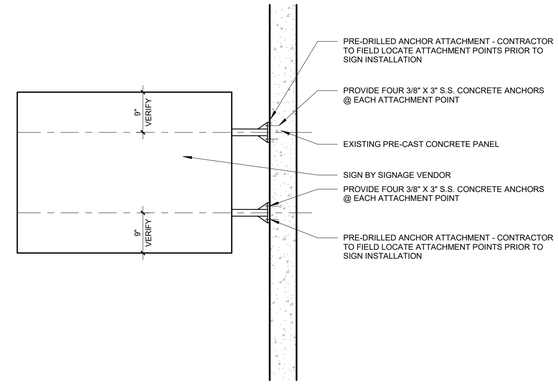

ANCHORING DETAIL - BLADE SIGNAGE | 4

3/4" = 1'-0"

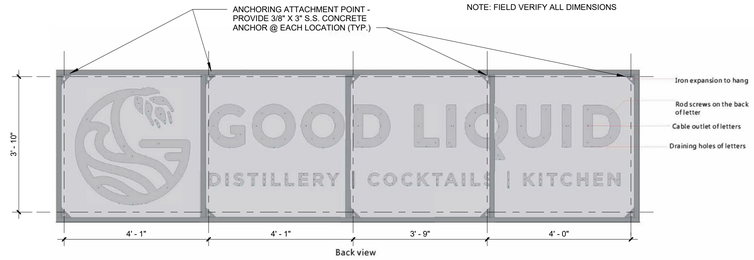

BACKER BOARD PLAN | 3

1/2" = 1'-0"

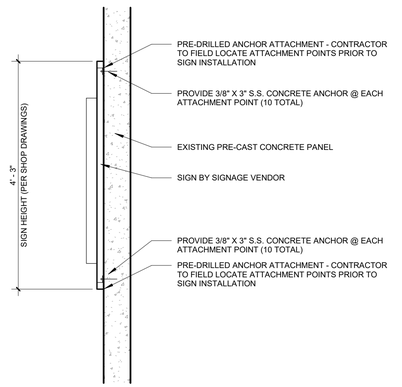

ANCHORING DETAIL - CHANNEL SIGN WITH BACKER BOARD | 1

3/4" = 1'-0"

TAYLOR STUDIOS, INC.
architecture• arts• interiors •sustainability
4501 Manatee Avenue West #174
Bradenton, Fl. 34209
tel. 941.238.9880
info@taylorstudios.biz
Ia. AA26003190

GOOD LIQUID DOWNTOWN DISTILLERY

1001 3RD AVENUE WEST, SUITE 100, BRADENTON, FL 34205

SIGNAGE INSTALLATION DETAILS

Project No.	20220014.00
Drawn By	jbt
Checked By	JBT
Date	02.06.25

Revisions:

"To the best of the knowledge of Engineer's Architects or Engineer's knowledge, the plans and specifications complies with minimum building codes and applicable fire safety regulations which are determined by local authority in accordance with Chapter 553 and 633 of Florida Statutes."

Jason Brian Taylor
AR 94890 / ID4963

SIGNAGE INSTALLATION

SIGN

Originals printed @ 24" x 36"
scale as required

All rights reserved © 2024

C:\Users\jbtay\Dropbox_Working\2022014 Good Liquid Downtown Distillery\SIGNAGE.rvt
2/6/2025 10:09:51 AM

SIGN LOCATION PLAN

SCALE: 1/8"=1'-0"

THIS ITEM HAS BEEN DIGITALLY SIGNED & SEALED BY KENNETH A. CONCI, PE 61685 USING A SHA-1 AUTHENTICATION CODE. PRINTED COPIES OF THIS DOCUMENT ARE NOT CONSIDERED SIGNED & SEALED & THE SHA AUTHENTICATION CODE MUST BE VERIFIED ON ANY ELECTRONIC COPIES.

KAD ENGINEERING
& CONSULTING, LLC
14934 SKIPJACK LOOP
BRADENTON, FL 34202
PHONE: (941) 545-6407

REV.	DESCRIPTION	01/09/25
1	SIGN DETAIL SHEET ADDED TO SET	

Project Name:
GOOD LIQUID
DISTILLERY & TAPROOM DOWNTOWN
1001 3RD AVENUE WEST, SUITE 100
BRADENTON, FL 34205

CONSTRUCTION DOCUMENTS

Sheet Description:
ELECTRICAL
SIGN LOCATION PLAN

Copyright 2023 KAD ENGINEERING & CONSULTING

Drawn:	JMM
Checked:	KAG
Scale:	N.T.S.
Date:	06/30/23

Sheet No.:
E4.0

City of Bradenton
Planning and Community Development
Planning Commission
April 16, 2025

Staff Report

Case Number: PLN-FBA-25-0003
Applicant: Caylee Grimes, agent for 3rd Avenue Associates, LLLP.
Address: 1001 3rd Avenue West, Bradenton, FL 34205
(PID: 3291400004)
Ward: 3
Current Zoning: T-6, Urban Core
Future Land Use: Urban Core
Flood Zone: X
Surrounding Property:
Zoning: North and East: T-6, Urban Core
South: T-6, Urban Core
West: T-5, Urban Center
Future Land Use: Urban Core, Urban Central Business District to the Northeast

SUMMARY OF REQUEST

The applicant is seeking a Form Based Code Adjustment to permit a 74 square foot wall sign on the west façade, superseding a previous approval of a 60 square foot wall sign on this façade.

HISTORY

On September 20, 2023, the City of Bradenton Planning Commission approved a request to install wall signs in the T-6 Urban Core district that are slightly misaligned with the main building's sign band. Additionally, one sign (on the north façade) was approved as larger than the allowed total square footage of 60 square feet; this sign was approved for 74 square feet.

ANALYSIS

The subject request is for an adjustment from the Form Based Code (FBC) Section 4.12, more specifically to Sections 4.12.1 and 4.12.6 (Signage Standards). The subsections state:

4.12.1 General to zones T3, T4-R, T4-O, T5, T6

a. There shall be no signage permitted additional to that specified in this section.

4.12.6 Specific to zones T6

b. A single external permanent sign band, or two parallel, horizontal expression lines that run the length of the Façade and that define an upper and lower frame for signs may be applied to the Façade of each building, providing that such sign not exceed 3 feet in height.
c. Wall Signs, maximum of 1 per Façade visible from common travel ways with a maximum area of 2 square feet per linear foot of the side of the building on which the sign is to be placed, not to exceed 60 square feet. Buildings four stories and above, add an additional 20 square feet for each floor lying above the third story, excluding the stories above the location of the sign.

The subject sign will be the same size as the aforementioned approved sign on the northern façade and will be placed as follows:



The Form Based Code states the following criteria for review of adjustments for non-governmental uses:

1.10.6.b Approval Criteria for "Non-Government" Uses

b. Adjustment requests for uses that are not uniquely governmental such as apartments/condominiums, hotels/motels, retail/service shops, or office buildings (regardless of ownership) will be approved with changes, or approved with conditions if the PCD Director or applicable review body finds that the applicant has shown that approval criteria "i" through "iii" have been met. Adjustment requests will be denied if the applicant has not demonstrated to the satisfaction of the PCD Director or applicable review body that the criteria have been met.

i. Granting the Adjustment will promote the same general level of land use compatibility as the otherwise applicable standards; and
ii. Granting the Adjustment will not materially affect adjacent land uses and the physical character of uses in the immediate vicinity of the proposed development because of inadequate buffering, screening, setback and other land use considerations; and
iii. Granting the Adjustment will be generally consistent with the purpose and intent of the Form-Based Code and the existing LURs, where applicable.

Staff finds that this request does not interfere with general land use compatibility, will not materially affect adjacent land uses and the physical character of the surrounding area, and is generally consistent with the purpose and intent of the Form Based Code and existing Land Use Regulations.

While the applicant is asking for deviations from the signage regulations, the proposal appears to meet the overall intent of the Form Based Code. The proposed sign does not create excessive clutter and allows for visual consistency with the previously approved signs. The request meets the criteria stated in 1.10.6.b of the Form Based Code. Staff encourages the Board to take all of the information from this report along with any presentations by the applicant and community feedback to render its decision on the subject request.

Respectfully submitted,

Jamie Schindewolf

Jamie Schindewolf
Senior Planner
City of Bradenton Planning and Community Development

RELEVANT CODE REFERENCES:

Form Based Code

1.10.2 Authority to Adjust Regulations

a. PCD Director. Unless listed below in subsection b, all regulations in the Form Based Code Zone Districts may be modified by the PCD Director using the procedure set forth in Section 1.10.3 and the criteria set forth in Section 1.10.6.

b. Architectural Review Board or Planning Commission. Adjustments for the following items shall require approval in conformance with Sections **1.10.3** and 1.10.4 and using criteria set forth in Section 1.10.6:

v. Signs prohibited under Section 4.12 "Signage Standards" and Section 5.5 City of Bradenton LURs.

1.10.3 Authority and Procedure

a. Application Requirements. An application for an adjustment shall be accompanied by documentation that establishes how the applicant meets the criteria of an adjustment and other relevant sections of the FBC.

b. Staff Review and Report.

i. The Department of Planning and Community Development shall review the application for the adjustment and may request comments of members of the Development Review Committee (DRC), and shall prepare a written staff analysis of the issues raised by the application.

ii. In conjunction with final project approval, the PCD Director is authorized to grant adjustments from all regulations in the Form Based Code except for those set forth in Section 1.10.2.b

iii. All other adjustments require approval from the ARB for adjustments related to building, or the Planning Commission for those regarding site plan elements. The PCD Director shall make a recommendation based on review criteria.

1.10.4 Architectural Review board or Planning Commission Action

a. If a request for an adjustment exceeds the authority of the PCD Director (defined in 1.10.2.a), then the request shall be referred to the ARB or Planning Commission for initial consideration. In either event, the ARB or the Planning Commission shall conduct a de novo public hearing, which shall be advertised and conducted in accord with

Section 2.3 of the City of Bradenton LURs. The ARB or Planning Commission shall review the proposed Adjustment, shall consider the written staff analysis and the testimony at the public hearing, and shall grant with conditions, or deny the application. The request for an Adjustment shall not subject the entire application for development approval to a public hearing unless otherwise required by this Code, but only that portion necessary to rule on the issue under consideration.

b. The ARB or Planning Commission shall make findings that the criteria of these regulations have or have not been satisfied by the Applicant.

c. Action taken by the ARB or Planning Commission to grant an Adjustment or to grant an Adjustment with conditions or safeguards shall be documented in the form of a resolution containing a legal description of the real property to which the Adjustment applies, together with the terms of the Adjustment, and any additional conditions or safeguards imposed

1.10.6.b Approval Criteria for "Non-Government" Uses

b. Other "Non-Government" Uses. Adjustment requests for uses that are not uniquely governmental such as apartments/condominiums, hotels/motels, retail/service shops, or office buildings (regardless of ownership) will be approved with changes, or approved with conditions if the PCD Director or applicable review body finds that the applicant has shown that approval criteria "i" through "iii" have been met. Adjustment requests will be denied if the applicant has not demonstrated to the satisfaction of the PCD Director or applicable review body that the criteria have been met.

i. Granting the Adjustment will promote the same general level of land use compatibility as the otherwise applicable standards; and
ii. Granting the Adjustment will not materially affect adjacent land uses and the physical character of uses in the immediate vicinity of the proposed development because of inadequate buffering, screening, setback and other land use considerations; and
iii. Granting the Adjustment will be generally consistent with the purpose and intent of the Form-Based Code and the existing LURs, where applicable.

4.12 Signage Standards

4.12.1 General to zones T3, T4-R, T4-O, T5, T6

a. There shall be no signage permitted additional to that specified in this section.

b. The address number, no more than 6 inches measured vertically, shall be attached to the building in proximity to the Principal Entrance or at a mailbox.

4.12.6 Specific to zones T6

a. Projecting signs, not to exceed 6 square feet for each separate business entrance, may be attached to and should be perpendicular to the Façade, and shall clear 9 feet above the Sidewalk.

b. A single external permanent sign band, or two parallel, horizontal expression lines that run the length of the Façade and that define an upper and lower frame for signs may be applied to the Façade of each building, providing that such sign not exceed 3 feet in height.

c. Wall Signs, maximum of 1 per Façade visible from common travel ways with a maximum area of 2 square feet per linear foot of the side of the building on which the sign is to be placed, not to exceed 60 square feet. Buildings four stories and above, add an additional 20 square feet for each floor lying above the third story, excluding the stories above the location of the sign.

d. Ground (Monument) Signs, maximum 1 per lot that exceeds 100 feet in width. Ground signs may not exceed 50 square feet and 10 feet in height.

e. Electronic Message Signs shall be prohibited in this district.

Land Use Regulations:

Please note that sections 2.2.8 and 2.2.8.1 are just a guide to assist in the Boards consideration of the proposed request.

2.2.8 Variance. A variance is permission granted by the planning commission to depart from a dimensional requirement of these LURs. Variances are allowed to relieve a property owner who, because of property characteristics beyond his or her control, is unable to meet a dimensional requirement of these LURs. Waivers granted by the PCD director as allowed in various sections of these LURs are exempt from this subsection.

2.2.8.1 *Eligibility.* A property owner who finds that a characteristic of his or her land or buildings makes it impossible or difficult to meet a dimensional requirement of these LURs may apply for a dimensional variance if:

a. The application meets all of the following criteria:

i. The need for the dimensional variance was not created by the applicant's or previous owner's action, such as improper lot division, in violation of these LURs or previously effective land use regulations

ii. Strict application of the provisions of these LURs would deprive the applicant of a reasonable use of his property, cause him unnecessary hardship, or deprive him or her of rights commonly enjoyed by other property owners in the same land use atlas district, and

iii. The granting of the dimensional variance would not confer on the applicant any special privilege denied to other property owners in the same land use atlas district; and

iv. The application is for a dimensional variance and would not authorize a use otherwise prohibited by these LURs, and

v. The dimensional variance is the minimum variance that will allow reasonable use of the property.

5.5.1 Purpose and Intent. It is the purpose of this section to promote public health, safety and welfare of the City of Bradenton through reasonable, consistent and non-discriminatory sign standards. In order to preserve and enhance the city as a desirable community in which to live, visit, and do business, a pleasing, visually attractive environment is of foremost importance. The regulation of signs within the city is a highly contributive means by which to achieve this desired end. The sign regulations in this Section are not intended to censor speech or to regulate viewpoints, but instead are intended to regulate the secondary effects of speech and especially insofar as those secondary effects may adversely affect aesthetics and traffic and pedestrian safety, and to accomplish the following:

5.5.1.1 Encourage the effective use of signs as a means of communications in the city;

5.5.1.2 Maintain and enhance the visual and aesthetic environment and thereby the city's ability to attract sources of economic development and growth, including enhancing the tourism industry;

5.5.1.3 Foster the integration of signage with architectural and landscape designs;

5.4.1.4 Preserve, conserve, protect, and enhance the aesthetic quality, historic resources, and scenic beauty of the city;

5.5.1.5 Lessen the visual clutter that may otherwise be caused by the proliferation, improper placement, illumination, animation, excessive height, and excessive size (area) of signs which compete for the attention of pedestrian and vehicular traffic;

5.5.1.6 Minimize the possible adverse effect of signs on nearby public and private property;

5.5.1.7 Regulate the appearance and design of signs in a manner that promotes and enhances the beautification of the city and that compliments the natural surroundings in recognition of this city's reliance on its natural surroundings and beautification efforts in retaining economic advantage for its resort community, as well as, for its major office and industrial parks, gateways, downtown and waterfront areas, and overlay districts;

5.5.1.8 Allow signs that are compatible with their surroundings and aid orientation, while precluding the placement of signs that contribute to sign clutter or that conceal or obstruct adjacent land uses or signs;

5.5.1.9 Improve pedestrian and traffic safety;

5.5.1.10 Regulate signs in a manner so as to not interfere with, obstruct the vision of or distract motorists, bicyclists or pedestrians;

5.5.1.11 Except to the extent expressly preempted by state or federal law, ensure that signs are constructed, installed and maintained in a safe and satisfactory manner, and protect the public from unsafe signs;

5.5.1.12 Encourage and allow signs that are appropriate to the land use atlas district in which they are located and consistent with the category of use and function to which they pertain;

5.5.1.13 Curtail the size and number of signs to the minimum reasonably necessary to identify a residential or business location and the nature of any such business;

5.5.1.14 Establish sign size in relationship to the scale of the lot and building on which the sign is to be placed or to which it pertains;

5.5.1.15 Categorize signs based upon the function that they serve and tailor the regulation of signs based upon their function;

5.5.1.16 Preclude signs from conflicting with the principal permitted use of the site and adjoining signs;

5.5.1.17 Allow for traffic control devices consistent with national standards and whose purpose is to promote highway safety and

efficiency by providing for the orderly movement of road users on streets and highways, and that notify road users of regulations and provide warning and guidance needed for the safe, uniform and efficient operation of all elements of the traffic stream;

5.5.1.18 Protect property values by precluding to the maximum extent possible sign types that create a nuisance to the occupancy or use of other properties as a result of their size, height, illumination, brightness, or movement;

5.5.1.19 Protect property values by ensuring that sign types as well as the number of signs, are in harmony with buildings, neighborhoods, and conforming signs in the area;

5.5.1.20 Streamline the approval process b requiring master signage plans; and

5.5.1.21 Enable the fair and consistent enforcement of these sign regulations.

5.5.11 Permitting Requirements

5.5.11.2 Sign Permit. Except for exempt signs, it shall be unlawful for any person to install, alter or cause to be installed or altered within the municipal limits of the city any sign otherwise allowed under this section and visible from a public right-of-way, whether permanent or temporary, without first having obtained a sign permit from the city. The sign permit shall be issued by the city only after determination has been made that the proposed sign fully complies with all conditions of this section.

5.5.11.3 Fees. No permit shall be issued until the appropriate allocation has been filed with the department of planning and community development and the applicable fees have been paid as adopted by the city council, and as amended from time to time.

EXHIBITS

EXHIBIT A: Location
EXHIBIT B: Zoning
EXHIBIT C: Future Land Use
EXHIBIT D: Legal Description

EXHIBIT A

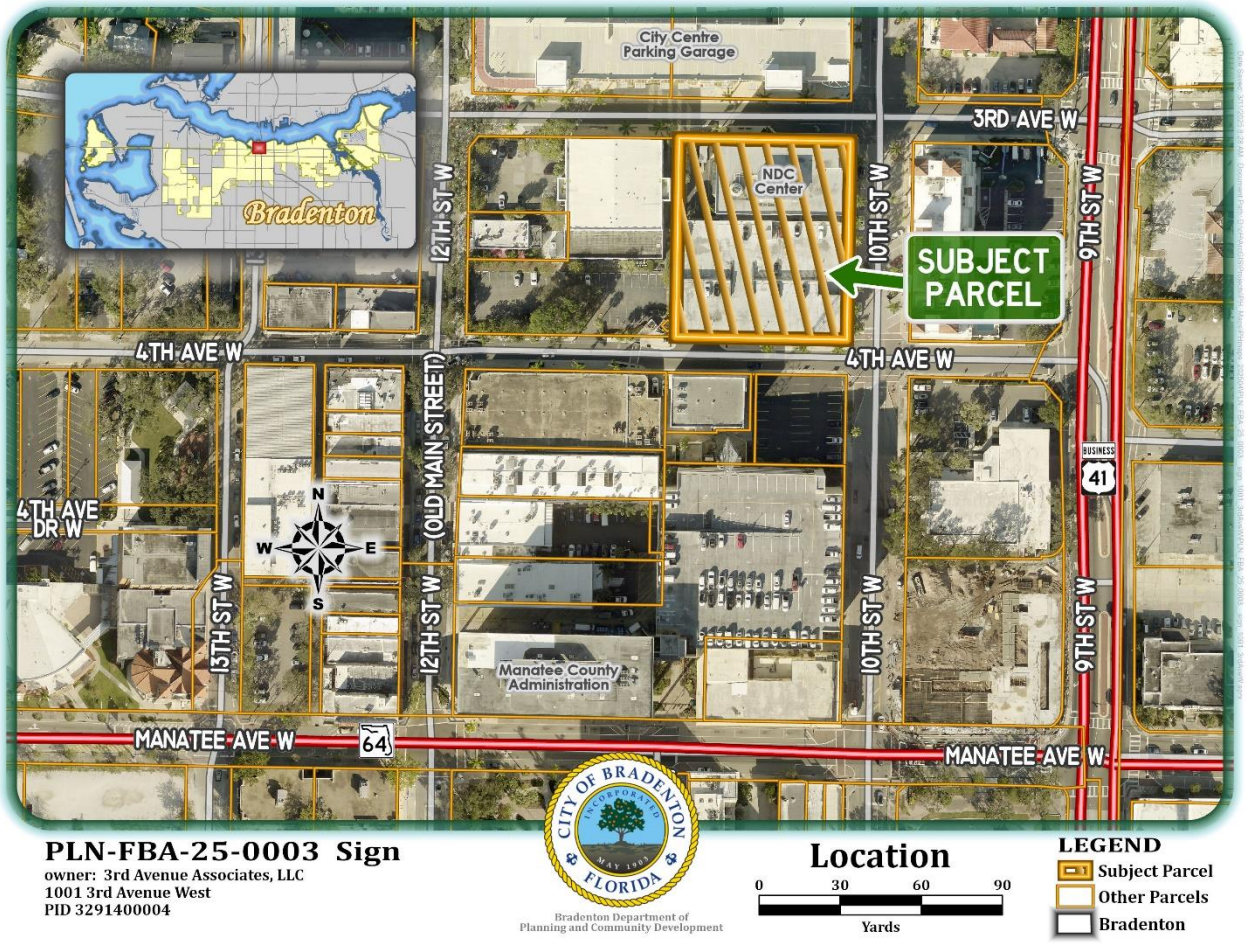
City Centre Parking Garage
3RD AVE W
NDC Center
12TH ST W
10TH ST W
9TH ST W
SUBJECT PARCEL
4TH AVE W
4TH AVE W
(OLD MAIN STREET)
BUSINESS 41
4TH AVE DR W
N
W
E
S
13TH ST W
12TH ST W
10TH ST W
9TH ST W
Manatee County Administration
MANATEE AVE W
64
MANATEE AVE W
Bradenton
PLN-FBA-25-0003 Sign
owner: 3rd Avenue Associates, LLC
1001 3rd Avenue West
PID 3291400004
CITY OF BRADENTON
INCORPORATED
MAY 1903
FLORIDA
Bradenton Department of
Planning and Community Development
Location
0 30 60 90
Yards
LEGEND
Subject Parcel
Other Parcels
Bradenton

EXHIBIT B

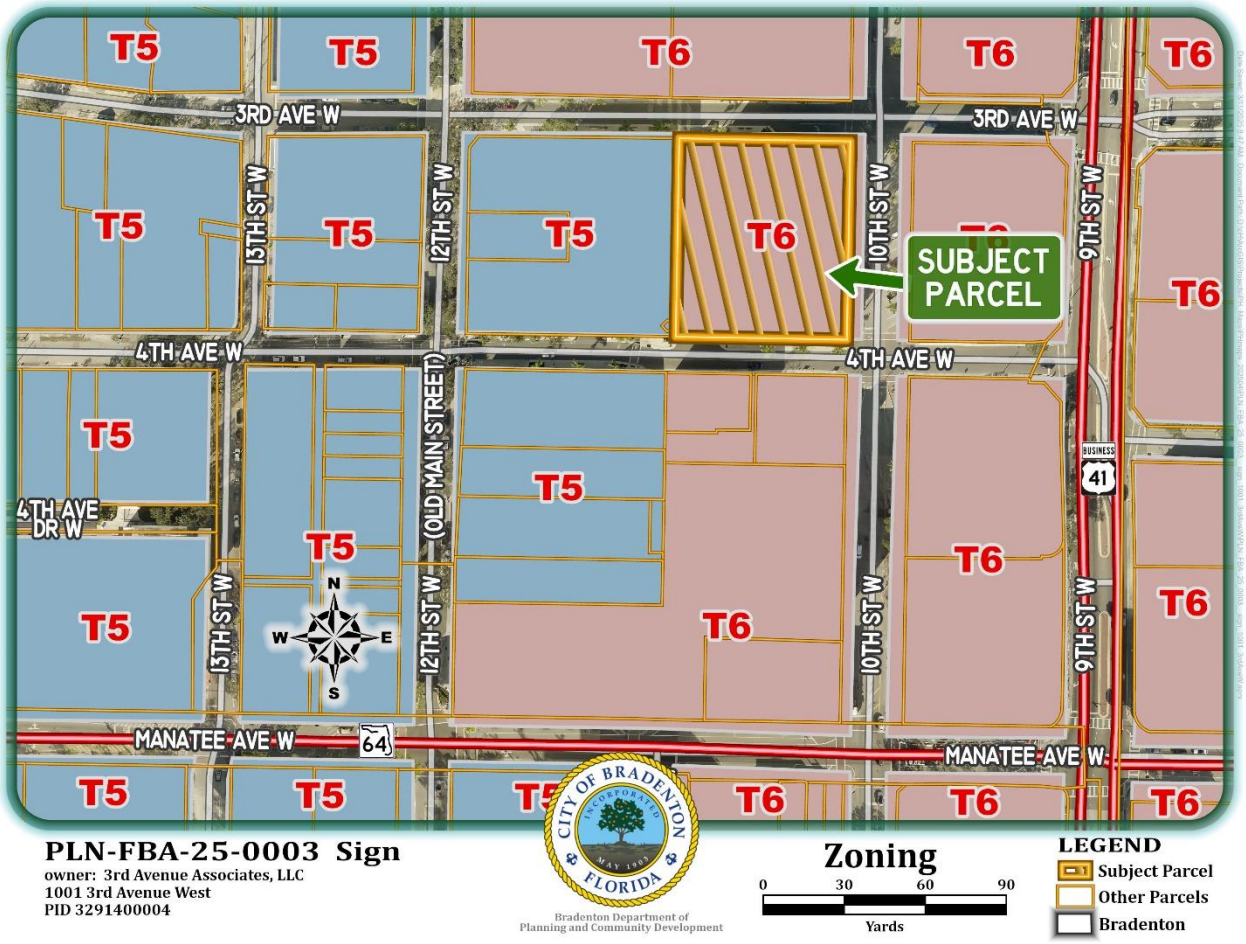
T5
T6
3RD AVE W
4TH AVE W
4TH AVE DR W
MANATEE AVE W
13TH ST W
12TH ST W
10TH ST W
9TH ST W
(OLD MAIN STREET)
SUBJECT PARCEL
BUSINESS 41
64
N
S
E
W
PLN-FBA-25-0003 Sign
owner: 3rd Avenue Associates, LLC
1001 3rd Avenue West
PID 3291400004
CITY OF BRADENTON
INCORPORATED
MAY 1903
FLORIDA
Bradenton Department of
Planning and Community Development
Zoning
0 30 60 90
Yards
LEGEND
Subject Parcel
Other Parcels
Bradenton

EXHIBIT C

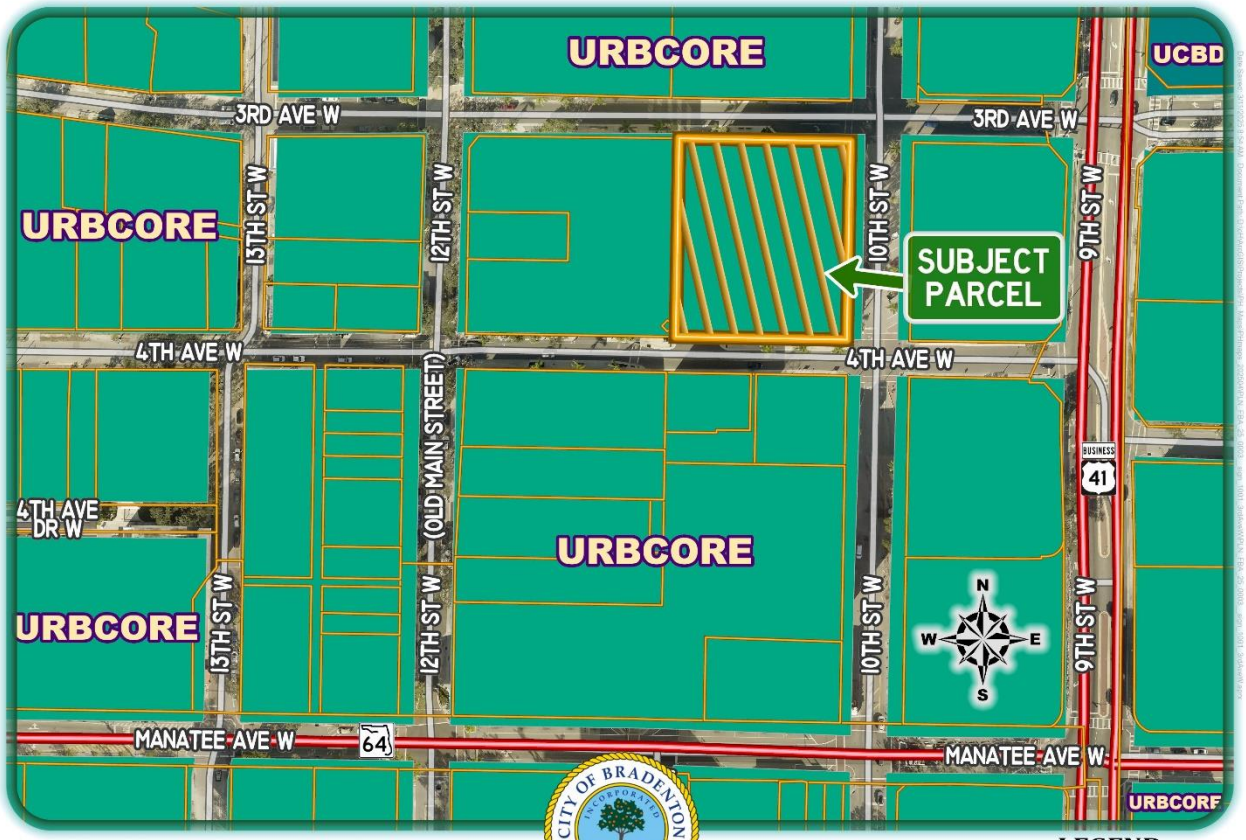
URBCORE
UCBD
3RD AVE W
3RD AVE W
URBCORE
13TH ST W
12TH ST W
10TH ST W
9TH ST W
SUBJECT PARCEL
4TH AVE W
4TH AVE W
(OLD MAIN STREET)
BUSINESS 41
4TH AVE DR W
URBCORE
URBCORE
13TH ST W
12TH ST W
10TH ST W
9TH ST W
N
W
E
S
MANATEE AVE W
64
MANATEE AVE W
URBCORF
PLN-FBA-25-0003 Sign
owner: 3rd Avenue Associates, LLC
1001 3rd Avenue West
PID 3291400004
CITY OF BRADENTON
INCORPORATED
MAY 1903
FLORIDA
Bradenton Department of
Planning and Community Development
Future Land Use
0 30 60 90
Yards
LEGEND
Subject Parcel
Other Parcels
Bradenton

EXHIBIT D

THAT PART OF BLK C OF SMITH'S ADD TO BRADENTON, AS REC IN PL BK 1, PG 135, PRMCF, LYING E OF THE ELY MOST LN OF RIVERVIEW CENTER, A CONDO, AS REC IN CONDO BK 14, PG 121, PRMCF, & ITS SLY PROLONGATION; SD ELY LN ALSO BEING THE E LN OF THE W 10.00FT OF SD BLK C, BEING MORE PARTICULARLY DESC AS FOLL: BEGIN AT THE SE COR OF SD BLK C, TH S 89 DEG 47 MIN 40 SEC W, ALG THE S LN OF SD BLK C, A DIST OF 191.23 FT TO THE PT OF INTERSECTION OF THE SLY PROLONGATION OF THE ELY MOST LN OF SD RIVERVIEW CENTER CONDO, SD PT ALSO BEING THE SE COR OF THE W 10.00 FT OF SD BLK C, TH N 00 DEG 06 MIN 12 SEC E, A DIST OF 219.67 FT TO THE NE COR OF SD RIVERVIEW CENTER CONDO, SD COR ALSO BEING THE NE COR OF THE W 10.00 FT OF SD BLK C, TH N 89 DEG 39 MIN 01 SEC E, A DIST OF 191.53 FT TO THE NE COR OF SD BLK C, TH S 00 DEG 10 MIN 44 SEC W, A DIST OF 220.15 FT TO THE POB. WHICH LANDS CONSIST OF TWO PARCELS: PARCEL 1 DESC AS: ALL OF LOTS 1,2,4,5,6,& 8, AND LOT 3, LESS THE W 10 FT, AND THE E 30 FT OF LOT 7, BLK C, SMITH'S ADD TO BRADENTON, PER PL BK 1, PG 135, PRMCF. PARCEL 2 DESC AS: THE E 10 FT OF THE W 20 FT OF LOT 7, BLK C, SMITH'S ADD TO BRADENTON, AS REC ON PG 135 OF PL BK 1, PRMCF. TOGETHER WITH THAT PORTION OF VACATED ALLEY LYING ADJACENT THERETO REC OR 1092/2410. (1837/6996) PI#32914.0000/4

AGENDA ITEM NO. 7.e

Item Cover Page

PLANNING COMMISSION MEETING AGENDA ITEM REPORT

DATE: April 16, 2025

SUBMITTED BY: Jamie Schindewolf, Planning & Community Development

ITEM TYPE: Resolution

AGENDA SECTION: **AGENDA ITEMS**

SUBJECT: **Resolution 25-39, Case PLN-SUP-24-0006:**

Request for a Special Use Permit to allow for a Group Care Facility at 2726 6th Avenue West. The applicant has indicated that the facility would be licensed as a Standard License ALF Following ACHA physical plant regulations and all other Standard ALF regulations of section 464.4.3.1. Application filed by Brian Lichterman, agent for Amanda Hubbard (contract purchaser).

SUGGESTED ACTION: Motion to recommend to City Council either approval or denial of Resolution 25-39, PLN-SUP-24-0006.

If the action is to recommend approval, the following stipulation is recommended:

a. A shared parking agreement must be recorded between the owner of the subject property and the owner of the parking lot located at PID 3541610059, to account for the required parking for Group Care Facilities in the Land Use Regulations.

Is this item Quasi-Judicial?
Yes

Does this item require a public hearing?
Yes

EXPLANATION:
The applicant has submitted a Special Use Permit application requesting permission to allow for a Group Care Facility at 2726 6th Avenue West. The applicant has indicated that the facility would be licensed as a Standard License ALF Following ACHA physical plant regulations and all other Standard ALF regulations of section 464.4.3.1.

FINANCIAL IMPACT:
N/A

ATTORNEY REVIEW/RECOMMENDATION:
Reviewed by City Attorney Rudacille.

SUGGESTED MOTION:
Motion to recommend either approval or denial of Resolution 25-39 with the stipulations recommended by staff.

ATTACHMENTS:
Resolution 25-39 (Draft).pdf
Application.pdf
Staff Report.pdf

RESOLUTION 25-29

A RESOLUTION OF THE CITY COUNCIL OF THE CITY OF BRADENTON GRANTING SPECIAL USE PERMIT NO. SUP.25.0006 TO ALLOW FOR GROUP CARE FACILITY (LICENSED AS AN ASSISTED LIVING FACILITY) IN THE UCC (URBAN COMMERCIAL CORRIDOR) ZONING DISTRICT AT THE PROPERTY LOCATED AT 2726 6TH AVENUE WEST (PARCEL ID 3545700001), BRADENTON, FLORIDA, AND MORE PARTICULARLY DESCRIBED HEREIN; MAKING FINDINGS OF FACT AND CONCLUSIONS OF LAW; PROVIDING FOR SEVERABILITY; AND PROVIDING AN EFFECTIVE DATE

WHEREAS, Amanda Hubbard (the "Applicant"), is the contract purchaser of the property located at 2726 6th Avenue West (Parcel ID 3545700001) Bradenton, Florida, more particularly described in Exhibit "A" (collectively the "Property") and owned by Pacific RBLF REO, LLC, a Delaware limited liability company, and

WHEREAS, the City of Bradenton Comprehensive Plan's Future Land Use Map designates the Property as Urban Commercial Corridor (UCC) and

WHEREAS, the City of Bradenton Official Zoning Map classifies the Property under the Urban Commercial Corridor (UCC) zoning district; and

WHEREAS, the City of Bradenton Land Use Regulations list Group Care Facilities as a use that may seek approval through a Special Use application; and

WHEREAS, the Planning Commission held a noticed public hearing on April 16, 2025 at which the Board received testimony and evidence from the applicant and City Planning staff; and

WHEREAS, the City Council held a noticed public hearing on April 16th, 2025, at which the Council received testimony and evidence from City Planning staff and members of the public in attendance.

NOW, THEREFORE, the City Council makes the following Findings of Fact and Conclusions of Law and issues the Final Order as follows:

Section 1. Findings of Fact and Conclusions of Law. After considering the evidence on the record and that presented at public hearing, including the staff

report and the recommendation of the Planning Commission, the City Council hereby makes the following Findings of Fact and Conclusions of Law:

a. The Whereas clauses contained herein are hereby adopted as Findings of Fact.

b. The Applicant is requesting approval of a Special Use to allow for a Group Care Facility (Assisted Living Facility) as generally shown on the site plan attached as Exhibit "B".

c. The City's professional staff determined that the project as proposed is consistent with the Comprehensive Plan and meets the criteria for approval under the Land Use Regulations.

d. The Planning Commission, which is designated as the local planning agency, determined that the project as proposed is consistent with the Comprehensive Plan and meets the criteria for approval under the Land Use Regulations.

e. The Planning Commission recommended approval with stipulations.

The proposed use meets Section 3.3.2 of the Land Use Regulations, as further described below.

a. The tract of land is suitable for the type of use proposed by virtue of its location, topography, shape and the nature of surrounding development. See 3.3.2.1.
b. Access points are provided on two frontages and located so as to best suit the use and property. See 3.3.2.2.
c. All buildings are located an adequate distance from property lines and streets. See 3.3.2.3.
d. Any nuisance or hazardous feature of the use is adequately screened, buffered or separated. See 3.3.2.4.
e. Adequate ingress and egress to property and proposed structures, with particular regard for automobiles and pedestrian safety and convenience, and emergency access, are provided. See 3.3.2.5.
f. Off-street parking and loading areas are appropriately located and designed; There will be no smoke, noise, glare, dust, vibrations, fumes, pollution and other effects of the use on adjoining properties. See 3.3.2.5.
g. Refuse and service areas are appropriately located and designed to address availability, adequacy and effect upon surrounding properties. See 3.3.2.5.

h. Utilities are available and adequate to serve the property in a similar manner to surrounding properties. See 3.3.2.5.
i. Sufficient screening is provided to protect surrounding properties from view of the premises; and internal noises from the use. See 3.3.2.5.
j. Proposed signage and exterior lighting adequately address glare, traffic safety and compatibility and harmony with surrounding properties. See 3.3.2.5.
k. The proposed use does not hinder the development of nearby vacant properties or adversely affect their economic value. See 3.3.2.5.
l. The land and/or building which are to be used are adequate. See 3.3.2.5.
m. The proposed use is generally compatible with adjacent properties and other property in the district, including proposed hours of operation. See 3.3.2.5.
n. The proposed use will not adversely affect the environmental quality of the district. See 3.3.2.5.
o. The proposed use is consistent with the City's Comprehensive Plan. See 3.3.2.5.

Section 2. Order. Based upon the foregoing, a Special Use is hereby approved and issued for the Property, to allow for a Group Care Facility (Assisted Living Facility) as generally shown on the survey attached as Exhibit "B", subject to the following stipulations:

a. All ADA designated parking spaces shall be on a solid paved surface and marked according to ADA requirements; and
b. The facility use shall be limited to a maximum of three (3) staff and twelve (12) residents unless the Applicant has in place an off-site parking agreement in a form acceptable to the City which provides for parking to accommodate additional residents, staff, and guests, and has provided the City with a copy of same. Additional use shall be limited to one (1) staff member, six (6) residents, one (1) independent unit, or twenty (20) clients per each additional off-site parking space, or as otherwise may be limited by applicable regulations.

Section 3. State and Federal Permits. Issuance of this development permit by the City does not in any way create any right on the part of the applicant to obtain a permit from a state or federal agency and does not create any liability on the part of the City for issuance of the permit if the applicant fails to obtain requisite approvals or fulfill the obligations imposed by a state or federal agency or undertakes actions that result in a violation of state or federal law. The applicant must obtain all applicable state and federal permits before commencing development or use.

Section 4. Severability. In the event that any portion or section of this Resolution is determined to be invalid, illegal or unconstitutional by a court of competent

jurisdiction, such decisions shall in no manner affect the remaining portions or sections of the Resolution which shall remain in full force and effect.

Section 5. Effective Date. This Resolution shall be effective upon adoption.

ADOPTED WITH A QUORUM PRESENT AND VOTING BY THE CITY COUNCIL OF THE CITY OF BRADENTON THIS 16TH DAY OF APRIL, 2025.

THE CITY OF BRADENTON, BY AND THROUGH THE CITY COUNCIL OF THE CITY OF BRADENTON

ATTEST:

_____ _____

Tamara Melton
CITY CLERK

Gene Brown
MAYOR

APPROVED AS TO FORM:

_____

Scott Rudacille
CITY ATTORNEY

DRAFT

EXHIBIT A
LEGAL DESCRIPTION

LOTS 20,22 MORROW SQUARE PI#35457.0000/1

DRAFT

EXHIBIT B
SITE PLAN

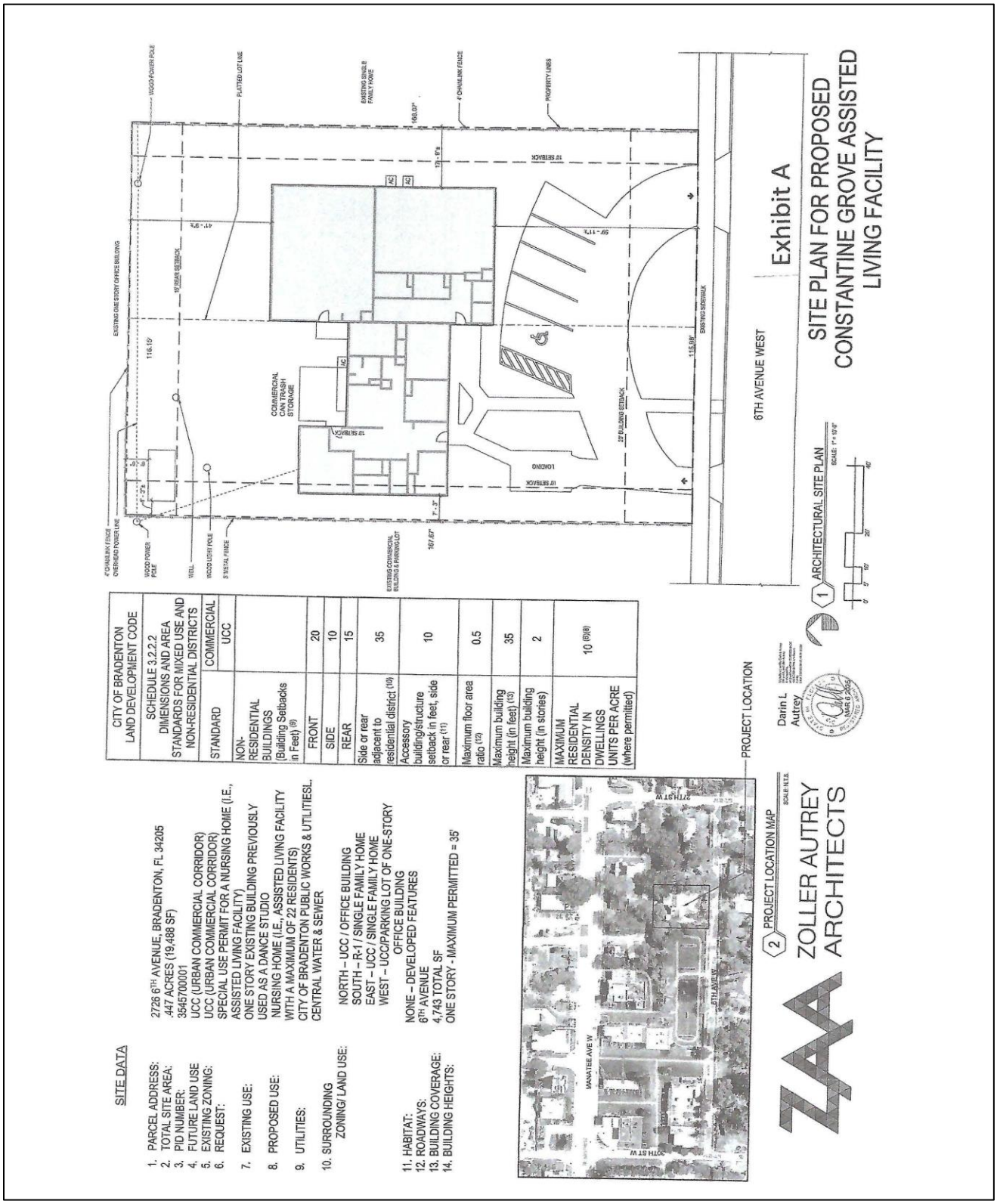

VISION PLANNING & DESIGN, LLC.

5571 Marquesas Circle
Sarasota, Florida 34233
941.780.4166
Brianl@visionplanning2.com
WWW. VisionPlanningAndDesign.COM

March 27, 2025

Mr. Greg Delong, Assistant Director of Planning & Community Development
City of Bradenton
101 Old Main Street
Bradenton, Florida 34205

RE: Proposed Special Use Permit Application to allow a Residential Group Care Facility for Between 18 and 20 Residents at an Existing Commercial Building Located at 2726 6Th Avenue West, Bradenton, Florida 34205 – Constantine Grove Assisted Living Facility

Dear Mr. Delong,

Please accept this Special Use Permit Application as a follow-up to the April 16, 2025 DRC pre-application meeting to discuss proposed Special Use Permit on .447 +/- acres (19,488 Sq. Ft) located at 2726 6Th Avenue West, Bradenton, Florida 34205. Although the original request was for a Nursing Home, this request is seeking approval of a Special Use Application to allow an existing single story commercial building of 4,742 Sq. Ft. to be converted to a Residential Group Care Facility (i.e., Assisted Living Facility (ALF) to be used by between 18 and 20 senior residents.

The Parcel Identification No. is 354700001. The subject parcel is currently designated on the City's Future Land Use Plan Map as UCC (Urban Commercial Corridor) and is zoned UCC (Urban Commercial Corridor). The Applicant is proposing to change the land use from a commercial building previously used as a dance studio to a Residential Group Care Facility (i.e., ALF) with group dining facilities. The facility would be licensed by the State of Florida as a Standard License ALF Following ACHA physical plant regulations and all other Standard ALF regulations of section 464.4.3.1

The proposed Special Use Permit is a request by Ms. Amanda Hubbard who is the Contract Purchaser of the Subject Parcel. She proposes to create a Residential Group Care Facility (i.e., Assisted Living Facility) operating under the name of Constantine Grove Assisted Living Facility. The proposed facility will be owned and operated by Ms. Hubbard who is a certified Assisted Living Administrator through ACHA. She also owns and operates the FARR-certified recovery residence in Manatee County. Her goal for the proposed Constantine Grove Assisted Living Facility is to create a high-quality living environment ensuring comfort and dignity for all residents. This would include assistance with Activities of Daily Living (ADLs) to support residents in maintaining their independence. Three nutritious meals a day prepared on-site to meet dietary needs. Weekly activities designed to promote engagement, socialization, and mental stimulation. We believe this facility represents a significant opportunity to enrich the community of Bradenton seniors by providing a nurturing, semi-luxurious environment. With Ms. Hubbard's dedication and expertise, this facility will not only meet but exceed the expectations of quality care, ensuring that residents enjoy a fulfilling and dignified life. We believe that Constantine Grove Assisted Living facility will be a valuable addition to the city, fostering a sense of community and support for our senior population.

The Residential Group Care Facility (i.e., Assisted Living Facility) will occur in an existing single-story wood constructed building of 4,743 sq. ft. Ms. Hubbard plans on a number of interior improvements to the existing building. The structure already fits in with the surrounding neighborhood and will be a compatible land use with the existing mix of commercial, office, residential and park uses within the surrounding area. No change is proposed to the building footprint and the development will comply with all the required setbacks and landscape buffers of the UCC District. Any transportation impacts from the project will be deminimus, as no residents will have vehicles, and the facility will coordinate any transportation needs by residents with an outside vendor for potential future outings. A lease arrangement to use the adjacent parking lot for the occasional need for additional parking will be available prior to any public hearings. All responses to the City Special Use Application along with a Site Plan are attached in **Attachment A**.

If you have any questions or require additional information, please do not hesitate to contact me.

Sincerely,
VISION PLANNING & DESIGN

Brian Lichterman, PA
Attachments

cc: Amanda Hubbard, Constantine Grove Assisted Living

Attachment A
RESPONSE TO SPECIAL USE REVIEW CRITERIA QUESTIONS 1-11

The following detailed written responses, using factual statements (called Findings of Fact) are intended to explain how the requested Special Use complies with each of the following review criteria contained in THE City Special Use Application.

1. Adequacy of ingress and egress to property and proposed structures with particular regard for automobiles and pedestrian safety and convenience, traffic generation, flow and control and emergency accesses.

Response: The site currently obtains separate ingress and egress from two existing driveways located on 6th Street West as shown on the attached Site Plan in **Exhibit A**. The site contains four existing parking spaces and one handicap space which is more than adequate to accommodate the vehicles of the estimated three employees per day shift and two employees on a night shift. None of the clients of the facility will have a vehicle on-site. There is also an existing loading area and only minimal sized delivery vehicles are anticipated because all groceries will be brought in by automobile. Furthermore, the neighboring property to the west has a very large parking lot and has expressed interest in accommodating additional parking spaces should City regulations require additional spaces, This collaboration will enhance accessibility and convenience for residents and staff, should the need ever arise. Accordingly, the amount of trip traffic from the site is considered deminimus. The nearby neighborhood park on the south side of 6th Street West will be easily accessible to residents via an existing sidewalk.

2. Location and design of off-street parking and loading areas in regard to the items in "1 " above and the smoke, noise, glare, dust, vibrations, fumes, pollution, and other effects of the use on the adjoining properties.

Response: As noted above, the site already contains five existing parking spaces which is more than adequate to accommodate the vehicles of the estimated three employees per day shift and two employees on a night shift. None of the residents of the facility will have a vehicle on-site. Accordingly, the number of vehicles and trip traffic from the site is very low which means any smoke, noise, glare, dust, vibrations, fumes, pollution, and other effects of the use on the adjoining properties will be minimal.

3. Location and design of refuse and service areas in regard to availability, adequacy and effect upon surrounding properties,

Response: A refuse area using hand carted garbage cans will be screened in the rear of the building and away from any residential areas to the south and east.

4. Utilities, in regard to location, availability, adequacy and compatibility with surrounding properties.

Response: The site already is served by sewer, water, electrical, phone and cable service and will have no impact on adjacent properties.

5, Screening, buffering or separation of any nuisance or hazardous features of the site,

Response: New supplemented landscaping will be planted along 6fll Street West which will serve to further screen, buffer and mitigate the facility from having any impact on adjacent properties. There are no hazardous features of the site.

6. Proposed signs and exterior lighting with reference to glare, traffic safety and compatibility and harmony with surrounding properties.

Response: There will be one proposed sign along 6tn Street that will be replaced in an area in front of the building along the street in an area designed for a ground mounted sign. Only the existing lighting in the parking area on the building is proposed to be used, so there will be no new lighting compatibility issues.

7. Effect upon the value of surrounding properties; the use shall not hinder the development of nearby vacant properties or adversely affect their economic values.

Response: Because of the new landscaping planned along 6th Street West and the overall better maintenance of the property, which has been vacant for a considerable time period, the effect of value on surrounding properties will only be positive.

8, Adequacy of land and/or building which are to be used.

Response: Because the proposed use is very similar or even less intensity to how the property has been used historically as a dance studio, the property and the building will be able to adequately accommodate an Assisted Living Facility without any problems.

9. General compatibility or appropriateness with adjacent properties and other property in the district with special consideration given to proposed hours of operation,

Response: The proposed Assisted Living Facility will maintain strict curfew hours for residents and visitors which will ensure the facility will not create any incompatibility with nearby properties.

10, Environmental quality of the district in which the use is proposed and the effect the Special Use Permit might have on such quality.

Response: The facility is not expected to create or have any environmental impacts. No existing trees are proposed to be removed unless they are diseased.

11. Consistency with the City of Bradenton Comprehensive Plan.

Response: The subject property is located within an area designated Urban Commercial Corridor and the implementing zoning district is Urban Commercial Corridor. The proposed use as a Residential Group Care Facility (i.e., Assisted Living Facility) will be consistent with all elements of the Comprehensive Plan and Land Development Regulations and zoning.

Specific Use Regulations for Group Care Facilities

4.3.6 Group care homes and group care facilities. ... Group care facilities involve community residential homes of seven or more residents as set forth in F.S. § 419.001. Group care facilities involve community residential homes of seven or more residents as set forth in F.S. § 419.001. The provisions of F.S. § 419.001 relating to the approval of such community residential homes herein denominated as group care homes and group care facilities are incorporated herein and made a part hereof, and the city shall establish appropriate monitoring procedures and standards for determining compliance by such group care homes and group care

facilities with the provisions of said statute. For density purposes, six beds shall constitute one independent unit of individual kitchens are not provided.

Response: The proposed Residential Group Care Facility will be licensed by the State of Florida as a Standard License ALF Following ACHA physical plant regulations and all other Standard ALF regulations. The facility will be used by between 18 and 20 senior residents, consistent with the following State standards:

464.4.3.1 A minimum of 35 square feet (3 m2) of living and dining space per resident, live-in staff and live in family member shall be provided except in facilities comprised of apartments. This space shall include living, dining, recreational or other space designated accessible to all residents, and shall not include bathrooms, corridors, storage space or screened porches which cannot be adapted for year round use. Facilities with apartments may count the apartment's living space square footage as part of the 35 square footage (3 m2) living and dining space requirement. Those facilities also serving as adult day care centers must provide an additional 35 square feet (3 m2) of living and dining space per adult day care client. Excess floor space in residents' bedrooms or apartments cannot be counted toward meeting the requirement of 35 square feet (3 m2) of living and dining space requirements for adult day care participants. Day care participants may not use residents' bedrooms for resting unless the room is currently vacant.

Additional Special Use Requirements (all special uses):

3.3.1 General standards. All special uses shall comply at minimum with the following standards. Additional requirements may be made by city council to ensure compatibility of uses.

Response: As demonstrated below, the proposed use will comply with all City minimum standards and will be compatible land use.

3.3.1.1 All special uses shall be subject to the general regulations of these LURs for single lot development, structures, lots, yards and vehicular use areas as well as the specific dimensional regulations for lots and structures for the zoning district in which the special use is proposed.

Response: The subject parcel complies with all provisions of the UCC zoning district with respect to parcel size, setbacks, and dimensional regulations of the district.

3.3.1.2 A landscaped separation strip of at least ten feet in width shall be provided along all property lines and along all streets serving the premises, except at approved access points.

Response: The subject already contains a separation strip of at least ten feet in width along all property lines and along the street frontage.

3.3.2.1 The tract of land must be suitable for the type of use proposed by virtue of its location, topography, shape and the nature of surrounding development.

Response: The site is suitable for the proposed use by virtue of its location within a Urban Commercial Corridor and has no natural limitations.

3.3.2.2 Access points must be located so as to best suit the use and property. Wide spacing between access points and intersecting streets should be required when feasible.

Response: The site contains both an ingress and egress that are appropriately located and sized for the site.

3.3.2.3 All buildings shall be located an adequate distance from property lines and streets. Setbacks in excess of those required for the specific zone may be required to lessen the effect of the use on neighboring properties.

Response: The existing building is adequately separated from the property lines and street as shown on **Exhibit A.** The area is designated as Urban Commercial Corridor, and the proposed use would be considered low intensity on the scale of uses permitted in this designation. Furthermore, the proposed use serves as an appropriate step down in land use intensity between the commercial uses to the north along Manatee Avenue and the single-family homes on the south side of 6th Avenue West.

3.3.2.4 Permanent screening, such as walls, fences, hedges, and other barriers, may be required to protect surrounding properties from view of the premises or noises from the use. The minimum height and other parameters of such screening may be specified.

Response: The existing building is already adequately separated from the adjacent properties to the north, east and west by an existing four-foot-high chain link fence. The fence is proposed to remain

SITE DATA

1.	PARCEL ADDRESS:	2726 6TH AVENUE, BRADENTON, FL 34205
2.	TOTAL SITE AREA:	.447 ACRES (19,488 SF)
3.	PID NUMBER:	3545700001
4.	FUTURE LAND USE	UCC (URBAN COMMERCIAL CORRIDOR)
5.	EXISTING ZONING:	UCC (URBAN COMMERCIAL CORRIDOR)
6.	REQUEST:	SPECIAL USE PERMIT FOR A NURSING HOME (I.E., ASSISTED LIVING FACILITY)
7.	EXISTING USE:	ONE STORY EXISTING BUILDING PREVIOUSLY USED AS A DANCE STUDIO
8.	PROPOSED USE:	NURSING HOME (I.E., ASSISTED LIVING FACILITY WITH A MAXIMUM OF 22 RESIDENTS)
9.	UTILITIES:	CITY OF BRADENTON PUBLIC WORKS & UTILITIESL. CENTRAL WATER & SEWER
10.	SURROUNDING ZONING/ LAND USE:	NORTH – UCC / OFFICE BUILDING SOUTH – R-1 / SINGLE FAMILY HOME EAST – UCC / SINGLE FAMILY HOME WEST – UCC/PARKING LOT OF ONE-STORY OFFICE BUILDING
11.	HABITAT:	NONE – DEVELOPED FEATURES
12.	ROADWAYS:	6TH AVENUE
13.	BUILDING COVERAGE:	4,743 TOTAL SF
14.	BUILDING HEIGHTS:	ONE STORY - MAXIMUM PERMITTED = 35'

CITY OF BRADENTON LAND DEVELOPMENT CODE SCHEDULE 3.2.2.2 DIMENSIONS AND AREA STANDARDS FOR MIXED USE AND NON-RESIDENTIAL DISTRICTS	
STANDARD	COMMERCIAL UCC
NON-RESIDENTIAL BUILDINGS (Building Setbacks in Feet) (9)	
FRONT	20
SIDE	10
REAR	15
Side or rear adjacent to residential district (10)	35
Accessory building/structure setback in feet, side or rear (11)	10
Maximum floor area ratio (12)	0.5
Maximum building height (in feet) (13)	35
Maximum building height (in stories)	2
MAXIMUM RESIDENTIAL DENSITY IN DWELLINGS UNITS PER ACRE (where permitted)	10 (6)(8)

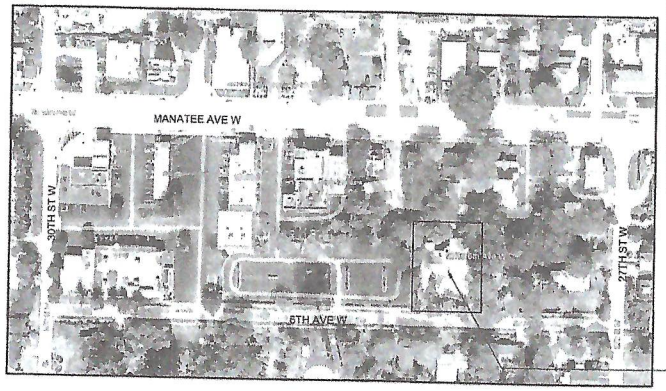

2 PROJECT LOCATION MAP
SCALE: N.T.S.

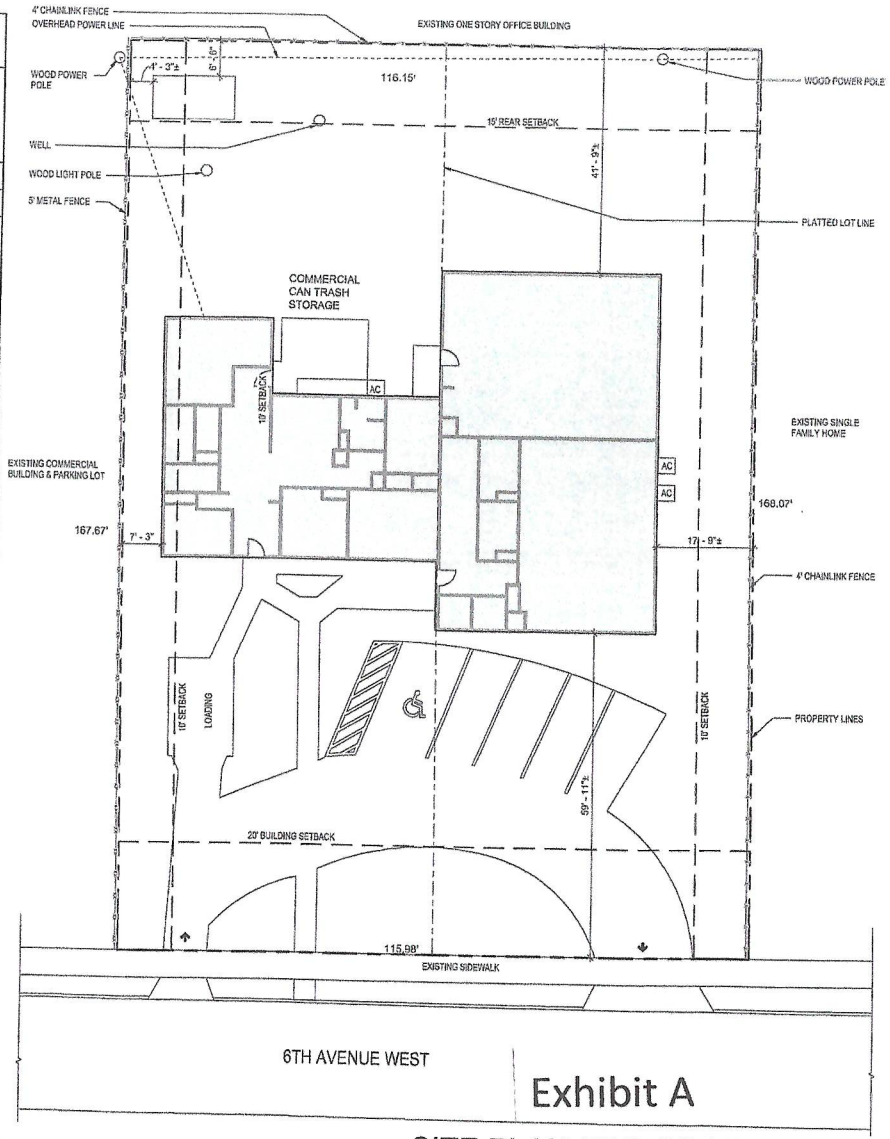

Darin L Autrey
STATE OF FLORIDA
REGISTERED ARCHITECT
MAR 6 2025

1 ARCHITECTURAL SITE PLAN
SCALE: 1" = 10'-0"
0' 5' 10' 20' 40'

ZAA ZOLLER AUTREY ARCHITECTS

Exhibit A

SITE PLAN FOR PROPOSED CONSTANTINE GROVE ASSISTED LIVING FACILITY

City of Bradenton
Planning and Community Development
Planning Commission
April 16, 2025

Staff Report

Resolution: 25-39
Case Number: PLN-SUP-25-0006
Applicant: Brian Lichterman, agent for Amanda Hubbard
Address: 2726 6th Avenue West
Zoning: UCC (Urban Commercial Corridor)
Future Land Use: UCC (Urban Commercial Corridor)
Flood Zone: X
Surrounding Property- Zoning:
North: UCC (Urban Commercial Corridor)
East: UCC (Urban Commercial Corridor)
South: R-1 (Single Family Residential)
West: UCC (Urban Commercial Corridor)
Surrounding Property- Future Land Use:
North: UCC (Urban Commercial Corridor)
East: UCC (Urban Commercial Corridor)
South: RESLOW (Low Density Residential)
West: UCC (Urban Commercial Corridor)

SUMMARY OF REQUEST

Brian Lichterman, agent for Amanda Hubbard, has submitted a Special Use application requesting permission to allow for a Group Care Facility at 2726 6th Avenue West. The applicant has indicated that the facility would be licensed as a Standard License ALF Following ACHA physical plant regulations and all other Standard ALF regulations of section 464.4.3.1.

The City of Bradenton Land Use Regulations do not specifically mention Assisted Living Facilities. Staff has determined that this use would fall under the definition of "Group Care Facility", as follows:

> *A facility housing seven or more persons for the purpose of providing care and frequently health care and counseling. This category includes congregate living facilities, emergency shelters, recovery homes and residential treatment facilities as defined herein and licensed by the*

State of Florida Department of Health and Rehabilitative Services [Department of Children and Families].

Compliance Overview with Land Use Regulations

Land uses requiring Special Use Permits are those which have the potential of disturbing other land uses in the zoning district. Because they are not necessarily compatible with land uses in the zone in which they are allowed, they require discretionary review. Special uses are permitted only if the use will be compatible with surrounding uses or can be made compatible through limitations of their operation or enhancements of the site development design. The Special Use Permit makes the stipulations of approval mandatory. The Special Use Permit is valid for the property on which it is issued for as long as the conditions are met, unless the approval stipulates otherwise.

The following is a list of required Land Use Regulations subject to review for Special Use Permits:

GENERAL STANDARDS (LAND USE REGULATIONS):

3.3.1 *General standards.* All special uses shall comply at minimum with the following standards. Additional requirements may be made by city council to ensure compatibility of uses.

3.3.1.1 All special uses shall be subject to the general regulations of these LURs for single lot development, structures, lots, yards and vehicular use areas as well as the specific dimensional regulations for lots and structures for the zoning district in which the special use is proposed.

3.3.1.2 A landscaped separation strip of at least ten feet in width shall be provided along all property lines and along all streets serving the premises, except at approved access points.

Staff Response: *Due to the location of the existing building, a full 10-foot landscape buffer does not appear to be possible on the western property line. However, there does appear to be existing landscaping in addition to a fence on the adjacent property line.*

3.3.1.3 If the use is listed as a specific use in section 4.3, the standards of that section must be met.

REVIEW CRITERIA (LAND USE REGULATIONS):

3.3.2 *Review criteria.* All special uses shall comply with and be reviewed using the following criteria to determine whether to allow the use at the proposed location and to determine appropriate conditions to the use.

3.3.2.1 The tract of land must be suitable for the type of use proposed by virtue of its location, topography, shape and the nature of surrounding development.

Staff Response: The tract of land appears suitable for use as a Group Care Facility of this nature.

3.3.2.2 Access points must be located so as to best suit the use and property. Wide spacing between access points and intersecting streets should be required when feasible.

Staff Response: The property was previously used as a dance studio and has a circular drive. The access is sufficient for the proposed use.

3.3.2.3 All buildings shall be located an adequate distance from property lines and streets. Setbacks in excess of those required for the specific zone may be required to lessen the effect of the use on neighboring properties.

Staff Response: No new buildings will be constructed as part of the proposed use.

3.3.2.4 Permanent screening, such as walls, fences, hedges, and other barriers, may be required to protect surrounding properties from view of the premises or noises from the use. The minimum height and other parameters of such screening may be specified.

3.3.2.5 The following shall be considered and cited as reasons for approval or denial of the application:

a. Adequacy of ingress and egress to property and proposed structures with particular regard for automobiles and pedestrian safety and convenience, traffic generation, flow and control and emergency access.

   Staff Response: No issues were raised regarding access at the Development Review Committee meeting for this project. The code requires 1 parking space per staff member on largest shift plus 1 per 6 beds plus 1 per independent unit, plus 1 per 20 clients. The applicant has indicated interest in entering into a parking agreement with the property next door to account for the

additional spaces required that are not on-site. An existing sidewalk is present between the adjacent parking and the subject property. The applicant does not anticipate residents having vehicles onsite.

b. Location and design of off-street parking and loading areas in regard to the items in "a." above and the smoke, noise, glare, dust, vibrations, fumes, pollution and other effects of the use on adjoining properties.

   Staff Response: It appears that the proposed uses will not affect adjoining properties as far as smoke, glare, dust, vibrations, fumes, and pollution. There will be few, if any, outdoor activities on the site, none that would be different than other residential uses.

c. Location and design of refuse and service areas in regard to availability, adequacy and effect upon surrounding properties.

   Staff Response: The applicant has indicated that there is space in the rear of the building for screened refuse cans.

d. Utilities, in regard to location, availability, adequacy and compatibility with surrounding properties.

   Staff Response: It appears that the proposed uses will not affect or impact existing utilities as the subject property already has utilities and city services.

e. Screening, buffering or separation of any nuisance or hazardous feature of the use.

   Staff Response: No nuisance or hazardous features are anticipated with this use. The applicant has indicated an intent to add enhanced landscaping along 6th Avenue West.

f. Proposed signs and exterior lighting with reference to glare, traffic safety and compatibility and harmony with surrounding properties.

   Staff Response: Any lighting or signage shall be in accordance with the City of Bradenton's requirements. The applicant would like to place a ground sign along 6th Avenue West.

g. Effect upon the value of surrounding properties; the use shall not hinder the development of nearby vacant properties or adversely affect their economic value.

Staff Response: It appears that the proposed uses will not adversely affect the economic value of surrounding properties. The property is currently vacant.

h. Adequacy of land and/or building which are to be used.

Staff Response: The building was previously used as a dance studio and is large enough that the applicant asserts it is adequate for the proposed use. The applicant will be responsible for renovating the interior per state licensing requirements, fire code and Florida Building Code. The location of the building does not allow for a full 10-foot landscape buffer on the west side.

i. General compatibility or appropriateness with adjacent properties and other property in the district with special consideration given to the proposed hours of operation.

Staff Response: It appears that the proposed uses are compatible and appropriate with adjacent properties. The adjacent uses are residential and former single family homes that have been converted to businesses, in addition to offices for the Realtor Association of Sarasota and Manatee, Inc.

j. Environmental quality of the district in which the use is proposed and the effect the special use permit might have on such quality.

Staff Response: It appears that there will be no negative impacts to the existing environmental quality of the district as a result of the proposed project.

k. Consistency with the city's comprehensive plan.

Staff Response: It appears that the proposed uses are consistent with the Comprehensive Plan as the Comprehensive Plan encourages moderate density residential and institutional uses.

** Please see the application materials for the applicant’s response to the Review Criteria.

PLANNING AND COMMUNITY DEVELOPMENT ANALYSIS

Overall, the requested use meets the criteria for Special Use Permit approval as found in the Land Use Regulations. The property as built cannot support the required 10-foot landscape buffer on all property lines. However, the proposed use is not anticipated to create negative externalities, and the adjacent property to where the buffer is not feasible is a parking lot.

Additionally, there is not sufficient parking on site to meet the parking regulations, though this can be mitigated through a shared parking agreement with the neighboring property.

The Planning Commission is encouraged to evaluate the request based on the provided criteria, as well as input from staff, the applicant, and the public. Should the Planning Commission choose to recommend approval of the request, the following stipulations are recommended:

a. A shared parking agreement must be recorded between the owner of the subject property and the owner of the parking lot located at PID 3541610059, to account for the required parking for Group Care Facilities in the Land Use Regulations.

Respectfully submitted,

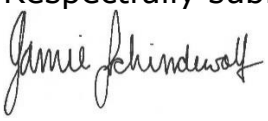

Senior Planner
City of Bradenton Planning and Community Development

EXHIBITS

EXHIBIT A: Location
EXHIBIT B: Zoning
EXHIBIT C: Future Land Use
EXHIBIT D: Legal Description
EXHIBIT E: Survey

EXHIBIT A
LOCATION



PLN-SUP-25-0006 Assisted Living
owner: F & B Negotiations, LLC
2726 6th Avenue West
PID 3545700001

CITY OF BRADENTON INCORPORATED MAY 1903 FLORIDA
Bradenton Department of Planning and Community Development

Location
0 30 60 90
Yards

LEGEND
Subject Parcel
Other Parcels
Bradenton

EXHIBIT B
ZONING

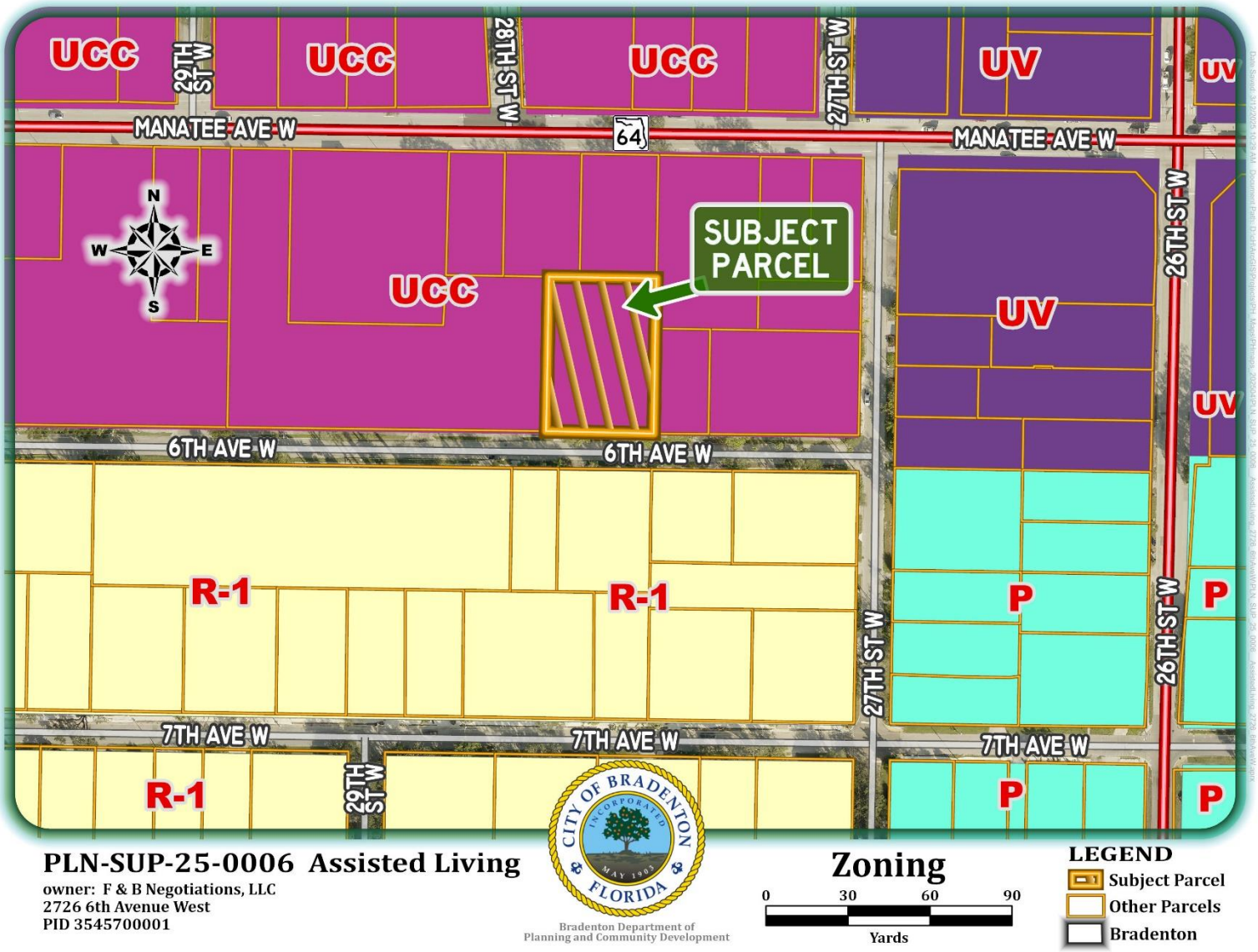

EXHIBIT C
FUTURE LAND USE

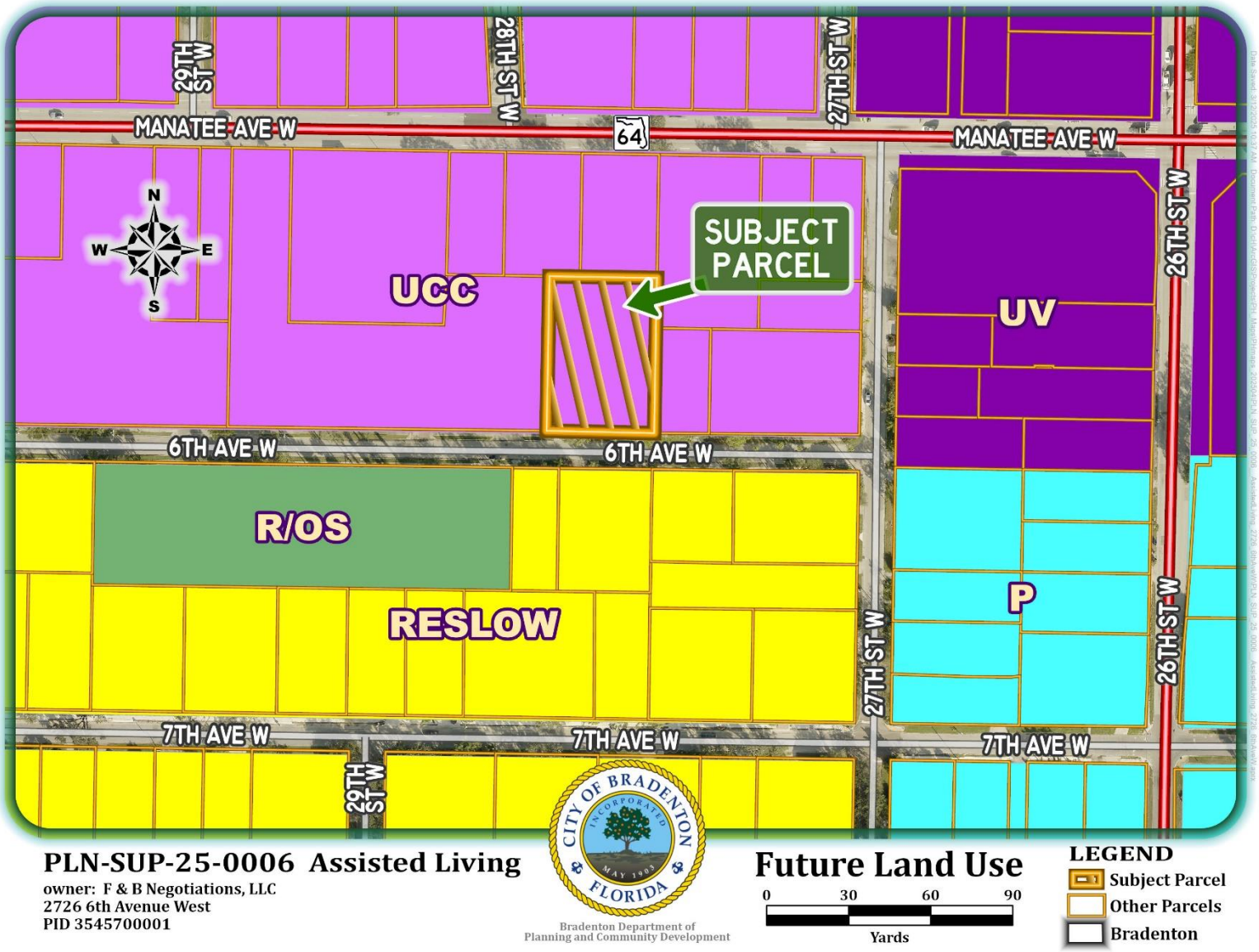

EXHIBIT D

LEGAL DESCRIPTION

LOTS 20,22 MORROW SQUARE PI#35457.0000/1

EXHIBIT E
SURVEY

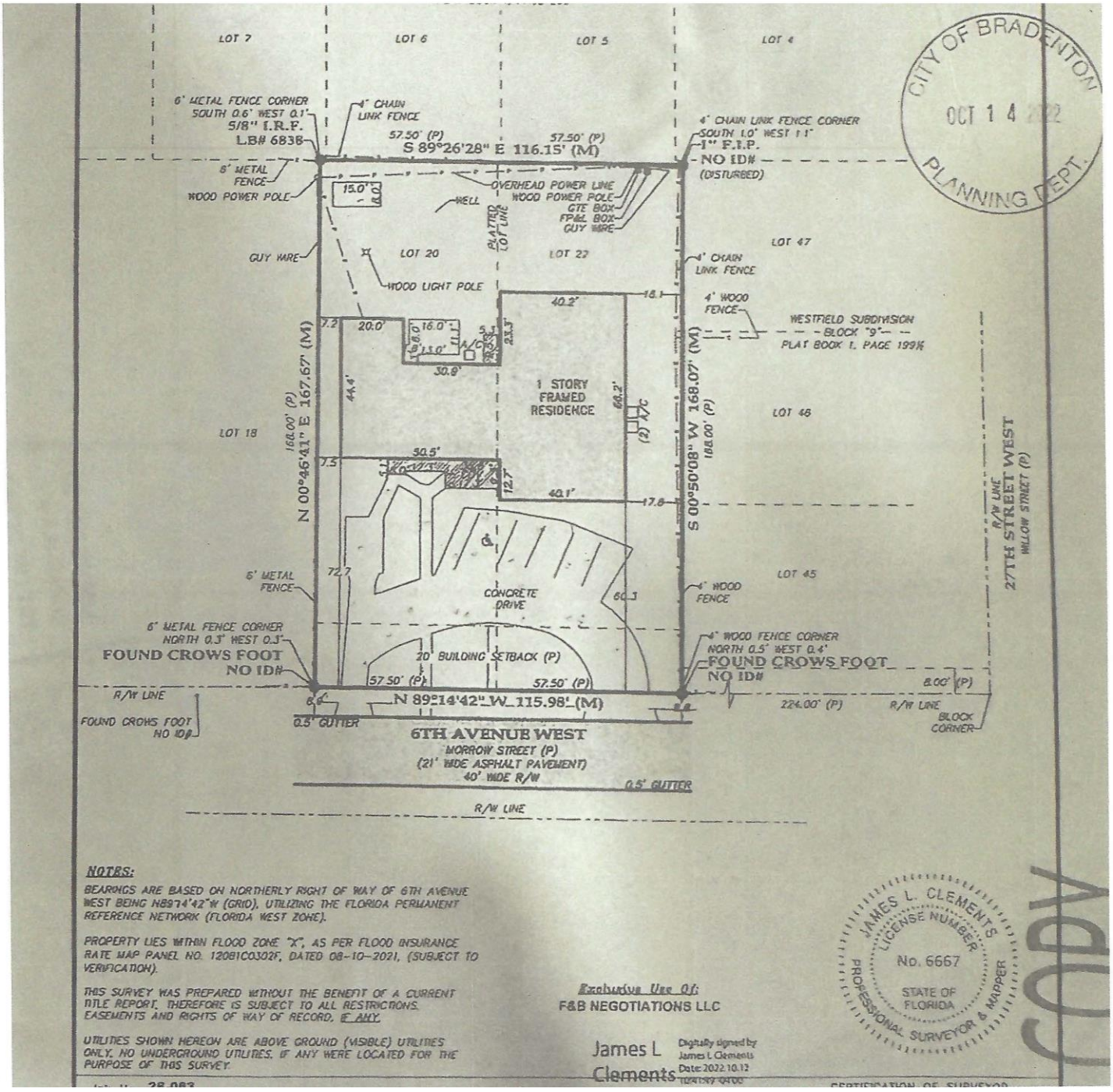

AGENDA ITEM NO. 7.f

Item Cover Page

PLANNING COMMISSION MEETING AGENDA ITEM REPORT

DATE: April 16, 2025

SUBMITTED BY: Greg DeLong, Planning & Community Development

ITEM TYPE: Resolution

AGENDA SECTION: **AGENDA ITEMS**

SUBJECT: **Resolution 25-38, Case PLN-SUP-25-0007**:

Request for a Special Use Permit to allow for a Club (Reception Center); to be located at 1710 Manatee Avenue East (Parcel ID 1270500000) in the T4-O (General Urban Open) transect zoning district. Application filed by Niketa Jackson (owner).

SUGGESTED ACTION: Motion to recommend to City Council either approval or denial of Resolution 25-38, Case PLN-SUP-25-0007.

If the action is to approve, the following are recommended stipulations for approval:

a. All events related to the reception center shall occur between the hours of 8am and 10pm.
b. All ADA designated parking spaces shall be on a solid paved surface and marked according to ADA requirements.
c. A Change of Occupancy permit must be approved, work completed, and final inspections approved prior to using the interior space for events. The permit must include intended use, occupancy, life safety plan, and required documents as listed in Florida Building Code Chapter 10, Sections 1001 – 1012. Said permit shall be applied for within 30 days of the Special Use Permit approval.
d. The Club/Event Center use shall be limited to a maximum of 42 guests unless the applicant has in place an off-site parking agreement in the form

acceptable to the City which provides for parking to accommodate additional attendees and has provided the City with a copy of the same. Additional attendees shall be limited to three for every off-site parking space provided, up to a maximum of 97 attendees or a number determined by the City of Bradenton Building Official and Fire Marshall based on building capacity, whichever is less.

e. Obtain Site Improvement Permit (SIP) prior to obtaining any Building permits.
f. Provide a tree survey with existing tree count, including type and condition. Also provide a tree plan that shows preserved existing trees as well as proposed plantings.
g. Kitchen must be brought up to commercial cooking standards or remove cooking appliances.

Is this item Quasi-Judicial?
Yes

Does this item require a public hearing?
Yes

EXPLANATION:
The applicant has submitted a Special Use Permit application requesting permission to a Club (Event Center) for property located at 1710 Manatee Avenue East.

In review of the Form Based Code (FBC), the uses proposed at the subject property most closely match those of a Club and according to Table 4.7 of the Form Based Code, Clubs are listed as a Special Use in the T4-O zoning district.

FINANCIAL IMPACT:
N/A

ATTORNEY REVIEW/RECOMMENDATION:
Reviewed by City Attorney Rudacille.

SUGGESTED MOTION:
Motion to recommend either approval or denial of Resolution 25-38 with stipulations recommended by staff.

ATTACHMENTS:
Resolution 25-38 (DRAFT).pdf
Application.pdf

Staff Report.pdf

RESOLUTION 25-38

A RESOLUTION OF THE CITY COUNCIL OF THE CITY OF BRADENTON, FLORIDA, GRANTING SPECIAL USE PERMIT NO. PLN-SUP-25-0007 TO PERMIT A CLUB (EVENT CENTER) FOR PROPERTY LOCATED AT 1710 MANATEE AVENUE EAST, BRADENTON, FLORIDA (PARCEL ID NO 1270500000), IN THE T4-O GENERAL URBAN OPEN TRANSECT DISTRICT; PROVIDING FOR SEVERABILITY; AND PROVIDING FOR AN EFFECTIVE DATE.

WHEREAS, MRT SOLUTIONS, LLLC (the "Property Owner" or "Applicant") owns the property located at 1710 Manatee Avenue East, Bradenton, Florida (Parcel ID No 1270500000), more particularly described in Exhibit "A" (the "Property"), and

WHEREAS, the City of Bradenton Comprehensive Plan's Future Land Use Map designates the Property as Urban Commercial Corridor (UCC); and

WHEREAS, the City of Bradenton Official Zoning Map classifies the Property under the (T4-O) General Urban Open Transect Zoning District; and

WHEREAS, the City of Bradenton Land Use Regulations, Schedule 3.2.1.2, identifies uses in the UV zoning district; and

WHEREAS, the City of Bradenton Form Based Code, Table 4.7 identifies Clubs as a Special Use; and

WHEREAS, the Property Owner submitted an application for a Special Use Permit to permit a club (event center); and

WHEREAS, the Planning Commission held a noticed public hearing on April 16, 2025, at which the Commission received testimony and evidence from the Applicant and City Planning staff; and

WHEREAS, the City Council held a noticed public hearing on May 14, 2025, at which the Council received testimony and evidence from City Planning staff and members of the public in attendance.

NOW, THEREFORE, the City Council makes the following Findings of Fact and Conclusions of Law and issues the Final Order as follows:

Section 1. Findings of Fact and Conclusions of Law. After considering the evidence on the record and that presented at public hearing, including the staff report and the recommendation of the Planning Commission, the City Council hereby makes the following Findings of Fact and Conclusions of Law:

a. The Whereas clauses contained herein are hereby adopted as Findings of Fact.
b. The Property Owner is requesting approval of a Special Use Permit to operate a club within the existing building on the Property, as shown on the Site Plan attached hereto as Exhibit "B".
c. The City's professional staff determined that with the proposed stipulations, the project is consistent with the Comprehensive Plan and meets the criteria for approval under the Land Use Regulations, with suggested stipulations.
d. The Planning Commission, which is designated as the local planning agency, determined that with the proposed stipulations, the project is consistent with the Comprehensive Plan and meets the criteria for approval under the Land Use Regulations.
e. The Planning Commission recommended approval with stipulations.
f.

The proposed use meets the review criteria in Section 3.3.2 of the City Code as follows:

3.3.2.1 The tract of land is suitable for the type of use proposed by virtue of its location, topography, shape and the nature of surrounding development.

3.3.2.2 Access points are located so as to best suit the use and property. Wide spacing between access points and intersecting streets should be required when feasible.

3.3.2.3 All buildings are located an adequate distance from property lines and streets.

3.3.2.4 Permanent screening, such as walls, fences, hedges, and other barriers, are not needed to protect surrounding properties from view of the premises or noises from the use.

3.3.2.5 The following shall be considered and cited as reasons for approval or denial of the application:

i. Adequate ingress and egress is provided to property and proposed structures with particular regard for automobiles and pedestrian safety and convenience, traffic generation, flow and control and emergency access.
ii. Location and design of off-street parking and loading areas in regard to the items in "a." above and the smoke, noise, glare, dust, vibrations, fumes, pollution, and other effects of the use on adjoining properties is adequate for the proposed use.

iii. Location and design of refuse and service areas are sufficient in regard to availability, adequacy, and effect upon surrounding properties.
iv. Utilities, in regard to location, availability, adequacy and compatibility with surrounding properties are provided.
v. Screening, buffering or separation of any nuisance or hazardous feature of the use are not needed for the proposed use.
vi. Proposed signs and exterior lighting are adequate with reference to glare, traffic safety and compatibility and harmony with surrounding properties.
vii. Effect upon the value of surrounding properties; the use will not hinder the development of nearby vacant properties or adversely affect their economic value.
viii. The land and/or building which are to be used are adequate for the proposed use.
ix. The proposed use is compatible and appropriate with adjacent properties and other property in the district with special consideration given to the proposed hours of operation.
x. The proposed use will not affect the environmental quality of the district.
xi. The proposed use is consistent with the City's comprehensive plan.

Section 2. Permit. Based upon the foregoing, a Special Use Permit is hereby approved and issued for the Property, to allow for a club, as generally shown on the Site Plan attached hereto as Exhibit "B", subject to the following stipulations:

a. All events related to the reception center shall occur between the hours of 8am and 10pm.
b. All ADA designated parking spaces shall be on a solid paved surface and marked according to ADA requirements.
c. A Change of Occupancy permit must be approved, work completed, and final inspections approved prior to using the interior space for events. The permit must include intended use, occupancy, life safety plan, and required documents as listed in Florida Building Code Chapter 10, Sections 1001 – 1012. Said permit shall be applied for within 30 days of the Special Use Permit approval.
d. The Club/Event Center use shall be limited to a maximum of 42 guests unless the Applicant has in place an off-site parking agreement in a form acceptable to the City which provides for parking to accommodate additional attendees and has provided the City with a copy of the same. Additional attendees shall be limited to three for every off-site parking space provided, up to a maximum of 97 attendees or a number determined by the City of Bradenton Building Official and Fire Marshall based on building capacity, whichever is less.
e. Obtain Site Improvement Permit (SIP) prior to obtaining any Building permits.

f. Provide a tree survey with existing tree count, including type and condition. Also provide a tree plan that shows preserved existing trees as well as proposed plantings.
g. Kitchen must be brought up to commercial cooking standards or remove cooking appliances.

Section 3. State and Federal Permits. Issuance of this development permit by the City does not in any way create any right on the part of the Applicant to obtain a permit from a state or federal agency and does not create any liability on the part of the City for issuance of the permit if the Applicant fails to obtain requisite approvals or fulfill the obligations imposed by a state or federal agency or undertakes actions that result in a violation of state or federal law. The Applicant must obtain all applicable state and federal permits before commencing development or use.

Section 4. Severability. In the event that any portion or section of this Resolution is determined to be invalid, illegal, or unconstitutional by a court of competent jurisdiction, such decisions shall in no manner affect the remaining portions or sections of the Resolution which shall remain in full force and effect.

Section 5. Effective Date. This Resolution shall be effective upon adoption.

ORDERED ON BEHALF OF THE CITY OF BRADENTON THIS 14th DAY OF MAY 2025.

THE CITY OF BRADENTON, BY AND THROUGH THE CITY COUNCIL OF THE CITY OF BRADENTON

ATTEST:

_____ _____

Tamara Melton
CITY CLERK

Gene Brown
MAYOR

APPROVED AS TO FORM:

_____
Scott Rudacille
CITY ATTORNEY

DRAFT

EXHIBIT A

Parcel 1270500000:
BEG 109.5 FT E & 25 FT S OF THE INT LINE OF ACADEMY & GRIFFIN STREETS; TH E 95.2 FT TO A FENCE; TH SWLY ALG SD FENCE 210 FT; TH W 167.8 FT TO THE E PROPERTY LINE OF GRIFFIN ST; TH N ALG THE PROPERTY LINE OF GRIFFIN ST 74 FT; TH E 84.5 FT; TH N 136 FT TO THE POB; LESS: W ONE-HALF (1/2)OF LOT IN THE CITY OF MANATEE FACING ON 17TH ST (FORMERLY GRIFFEN ST) HAVING A FRONTAGE OF 74 FT & RUNNING E 84.5 FT. LOCATED ON THE LOT IS A CONCRETE BLOCK HOUSE BUILT BY PROF.KENDALL AS AN INDUSTRIAL INSTITUTE, MORE PARTICULARLY DESC AS FOLLOWS: BEG 25 FT E & 161 FT S OF THE INT LINE OF ACADEMY & GRIFFEN STREETS, TH E 84.5 FT, TH S 74 FT, TH W 84.5 FT, TH N 74 FT TO POB (OR 1381 P 602) PI#12705.0000/0

DRAFT

EXHIBIT B


MANATEE AVENUE EAST
N 88°11'33" E 95.30' (M)
POINT OF BEGINNING
5/8" I.R.F.
NO ID #
1" I.P.F.
NO ID #
EXISTING
1 STORY
BLOCK
RESIDENCE
F.F.E.=14.99'
N 01°53'58" W 209.35' (M)
S 01°31'13" E 209.10' (M)
POINT OF BEGINNING
(LESS OUT PORTION)
5/8" I.R.S.
LB # 6667
3/4" I.P.F.
NO ID #
S 88°39'14" W 83.4' (M)

EXHIBIT B

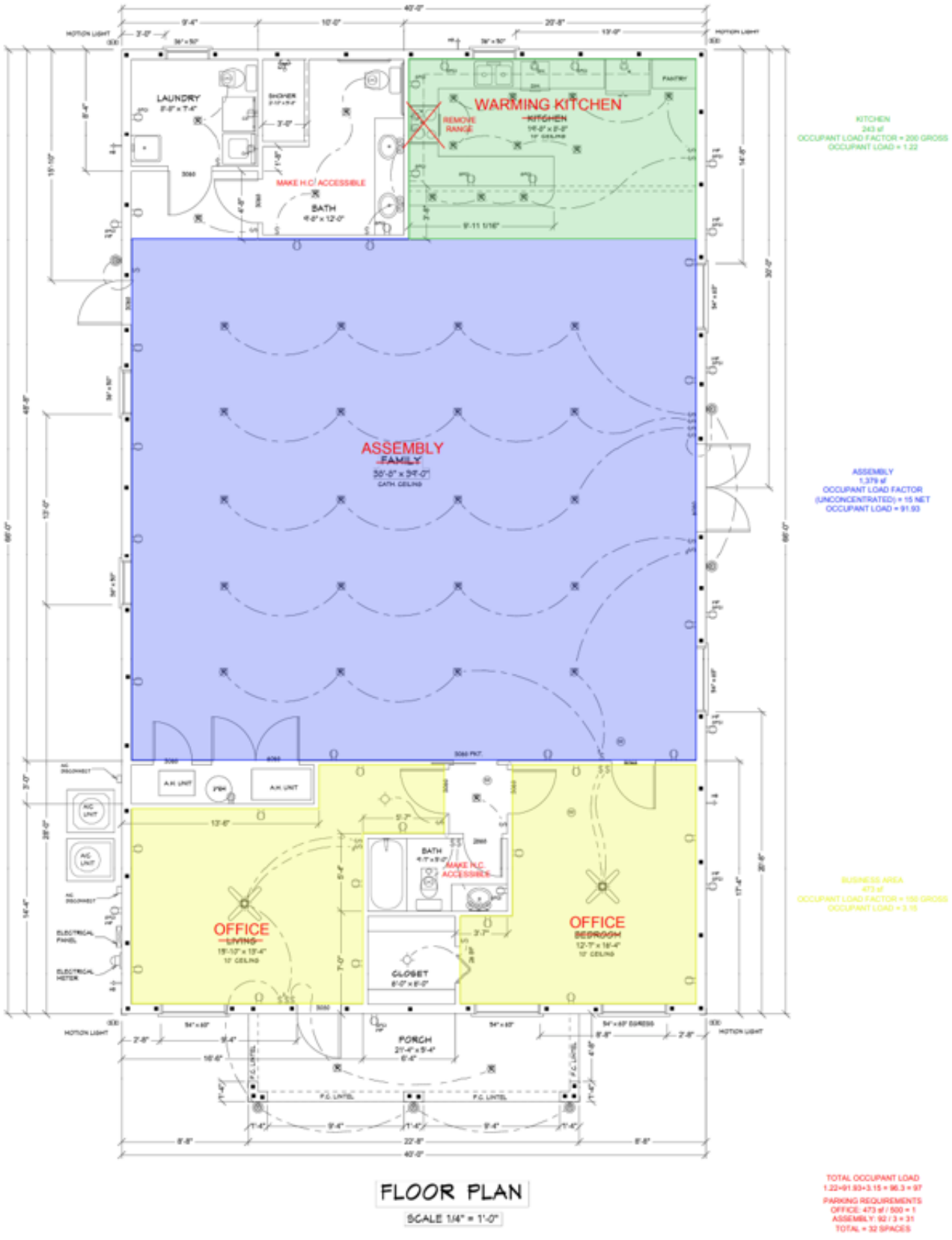

FLOOR PLAN

SCALE 1/4" = 1'-0"

PLN-SUP-25-0007

Menu Reports Help

File Date: 03/07/2025

Application Status: New

Assigned To:

Application Name:

Application Detail: Detail

Scope of Work: Special use permit

Application Type: Special Use Permit

Documents:

File Name	Document Group	Category	Description	Type	Document Status	Document Status Date
2025 survey-sealed.pdf	PLANNING	Other	Updated Survey	application/pdf	Uploaded	03/07/2025
Building floor plan.png	PLANNING	Other	Floor plan	image/x-png	Uploaded	03/07/2025
Special Use written re...	PLANNING	Other	Detail responses	application/pdf	Uploaded	03/07/2025
SU Site plan sealed.pdf	PLANNING	Other	Site plan	application/pdf	Uploaded	03/07/2025

Show all

Address: 1710 MANATEE Ave E, BRADENTON, FL 34208

Owner Name: MRT SOLUTIONS LLC

Owner Address: 11811 ERIE RD, PARRISH, FL 34219

Parcel No: 1270500000

Licensed Professionals Info:

Primary	License Number	License Type	Name	Business Name	Business License #

Application Comments:

View ID	Comment	Date

Initiated by Product: ACA

Contact Info:

Name	Organization Name	Contact Type	Status
Niketa Jackson		Applicant	Active

Job Value: $0.00

Total Fee Assessed: $0.00

Total Fee Invoiced: $0.00

Balance: $0.00

Custom Fields:

SPECIAL USE

Type	Other
Other	Club/recreation center

MEETING INFORMATION

Meeting Type	Date	Status

Workflow Status:

Task	Assigned To	Status	Status Date	Action By
Intake	Jamie Schindewolf			
Case Manager				
Building Review				
Public Works Review				
Planning Review				
Fire Review				
Other Reviews				
Review Consolidation				
DRC				
Planning Commission				
City Council #1				
City Council #2				

Condition Status:

Name	Short Comments	Status	Apply Date	Severity	Action By

Scheduled/Pending Inspections:

Inspection Type	Scheduled Date	Inspector	Status	Comments

Resulted Inspections:

Inspection Type	Inspection Date	Inspector	Status	Comments

1. Adequacy of ingress and egress to property and proposed structures with particular regard for automobiles and pedestrian safety and convenience, traffic generation, flow and control and emergency access.

There is one vehicles access point from Manatee Ave E, allowing vehicles to enter and exit via two vehicle driveway.

2. Location and design of off-street parking and loading areas in regard to the items in "1" above and the smoke, noise, glare, dust, vibrations, fumes, pollution and other effects of the use on adjoining properties.

The building is located on .25 acre with rear space for parking.
There are two adjacent lots. One is a medical office that currently not open. The second lot is vacant.
Our events will be outside business hours, therefor we do not anticipate any effects on adjoining properties.

3. Location and design of refuse and service areas in regard to availability, adequacy and effect upon surrounding properties.

There are 6 waste receptacles located on the east side of the building along privacy fence which we anticipate to be adequate.

4. Utilities, in regard to location, availability, adequacy and compatibility with surrounding properties.

There are 3 outdoor outlets on the east side of the building and one outdoor outlet on the rear/ south side of the building. There are outdoor flood lights installed on the building. There are three outdoor water faucets and hose.

5. Screening, buffering or separation of any nuisance or hazardous feature of the use.

Outdoor noise levels will comply with the City of Bradenton's Code of Ordinances - Chapter 38, ARTICLE V. SOUND CONTROL
bttps:Ulibrary,muoicode.com/fl/bradenton/codes/code of ordinances?nodeld=PTIICQOR CH38 EN ARTVSOCO S38-155MASOLE

6. Proposed signs and exterior lighting with reference to glare, traffic safety and compatibility and harmony with surrounding properties.

We anticipate any future signage will not present any of these issues.

7. Effect upon the value of surrounding properties; the use shall not hinder the development of nearby vacant properties or adversely affect their economic values.

There is no effect on the value surrounding properties.

8. Adequacy of land and/or building which are to be used.

The land and building are adequate for the intended use.

9. General compatibility or appropriateness with adjacent properties and other property in the district with special consideration given to proposed hours of operation.

The adjacent medical office is currently closed for business. The other adjacent property is vacant. Our events are held outside business hours, therefore we do not anticipate affects on adjoining properties.

10. Environmental quality of the district in which the use is proposed and the effect the Special Use Permit might have on such quality.

There is no effect to environmental quality of the district.

11. Consistency with the City of Bradenton Comprehensive Plan.

The properties zoning is T4O allows for several relevant usages such as club/recreation area with special use permit.

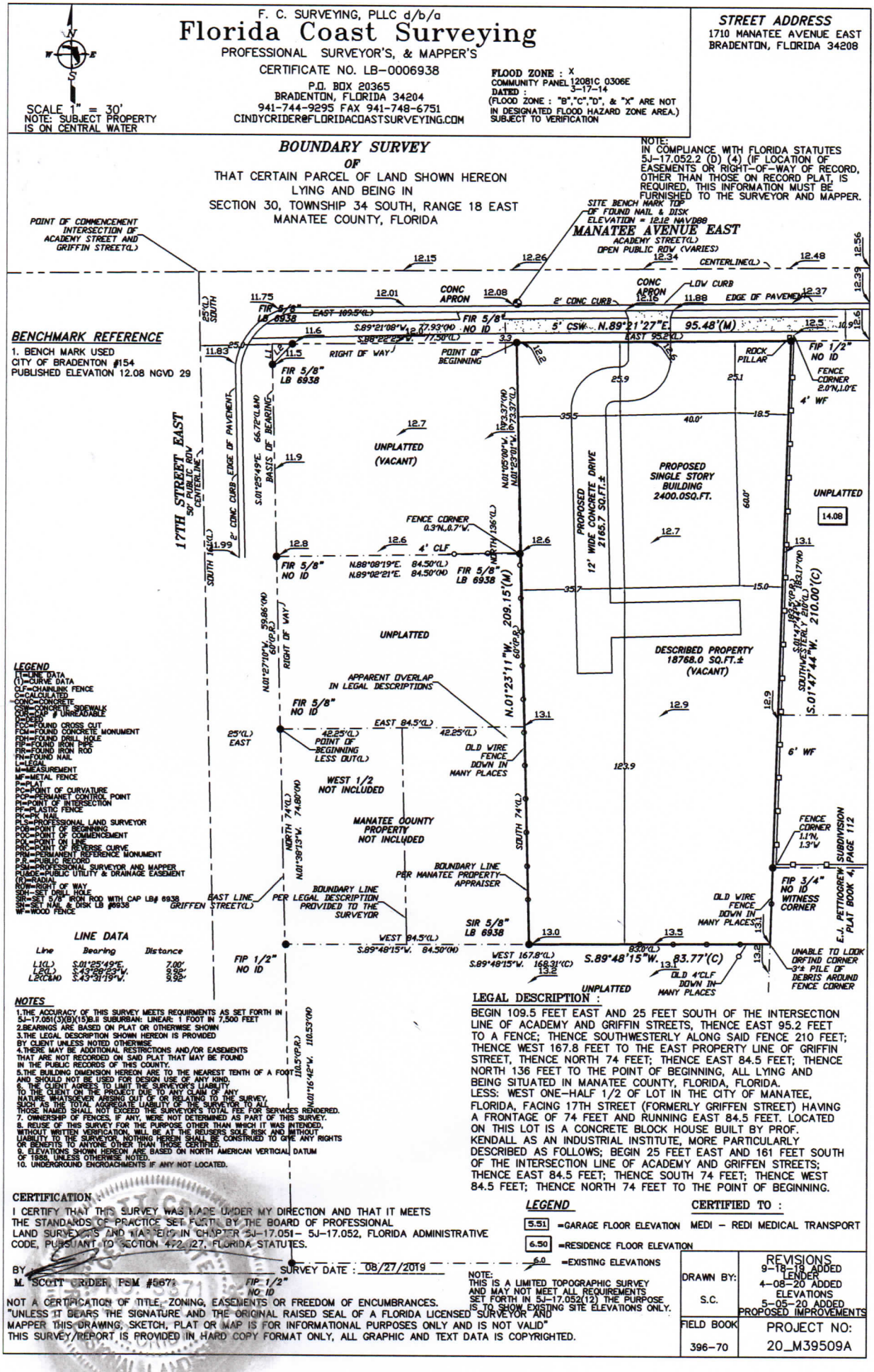
F. C. SURVEYING, PLLC d/b/a
Florida Coast Surveying
PROFESSIONAL SURVEYOR'S, & MAPPER'S
CERTIFICATE NO. LB-0006938
P.O. BOX 20365
BRADENTON, FLORIDA 34204
941-744-9295 FAX 941-748-6751
CINDYCRIDER@FLORIDACOASTSURVEYING.COM
SCALE 1" = 30'
NOTE: SUBJECT PROPERTY IS ON CENTRAL WATER
FLOOD ZONE : X
COMMUNITY PANEL 12081C 0306E
DATED : 3-17-14
(FLOOD ZONE : "B","C","D", & "X" ARE NOT IN DESIGNATED FLOOD HAZARD ZONE AREA.)
SUBJECT TO VERIFICATION
STREET ADDRESS
1710 MANATEE AVENUE EAST
BRADENTON, FLORIDA 34208
BOUNDARY SURVEY
OF
THAT CERTAIN PARCEL OF LAND SHOWN HEREON
LYING AND BEING IN
SECTION 30, TOWNSHIP 34 SOUTH, RANGE 18 EAST
MANATEE COUNTY, FLORIDA
NOTE:
IN COMPLIANCE WITH FLORIDA STATUTES 5J-17.052.2 (D) (4) (IF LOCATION OF EASEMENTS OR RIGHT-OF-WAY OF RECORD, OTHER THAN THOSE ON RECORD PLAT, IS REQUIRED, THIS INFORMATION MUST BE FURNISHED TO THE SURVEYOR AND MAPPER.
POINT OF COMMENCEMENT INTERSECTION OF ACADEMY STREET AND GRIFFIN STREET(L)
SITE BENCH MARK TOP OF FOUND NAIL & DISK ELEVATION = 12.12 NAVD88
MANATEE AVENUE EAST
ACADEMY STREET(L)
OPEN PUBLIC ROW (VARIES)
CENTERLINE(L)
EDGE OF PAVEMENT
CONC APRON
LOW CURB
2' CONC CURB
5' CSW
N.89°21'27"E. 95.48'(M)
EAST 95.2'(L)
POINT OF BEGINNING
ROCK PILLAR
FIP 1/2" NO ID
FENCE CORNER 2.0'N,1.0'E
4' WF
FIR 5/8" LB 6938
FIR 5/8" NO ID
RIGHT OF WAY
17TH STREET EAST
50' PUBLIC ROW
CENTERLINE
EDGE OF PAVEMENT
2' CONC CURB
BASIS OF BEARING
S.01°25'49"E. 66.72'(L&M)
S.88°22'23"W. 77.50'(L)
N.89°21'08"W. 27.93'(M)
NO ID
UNPLATTED (VACANT)
PROPOSED SINGLE STORY BUILDING 2400.0SQ.FT.
PROPOSED 12' WIDE CONCRETE DRIVE 2165.7 SQ.FT.±
UNPLATTED
14.08
FENCE CORNER 0.3'N,0.7'W.
4' CLF
N.88°08'19"E. 84.50'(L)
N.89°02'21"E. 84.50'(M)
FIR 5/8" LB 6938
209.15'(M)
210.00'(C)
S.01°47'44"W.
UNPLATTED
DESCRIBED PROPERTY 18768.0 SQ.FT.± (VACANT)
APPARENT OVERLAP IN LEGAL DESCRIPTIONS
N.01°23'11"W.
EAST 84.5'(L)
42.25'(L)
POINT OF BEGINNING LESS OUT(L)
OLD WIRE FENCE DOWN IN MANY PLACES
6' WF
WEST 1/2 NOT INCLUDED
MANATEE COUNTY PROPERTY NOT INCLUDED
BOUNDARY LINE PER MANATEE PROPERTY APPRAISER
BOUNDARY LINE PER LEGAL DESCRIPTION PROVIDED TO THE SURVEYOR
EAST LINE GRIFFEN STREET(L)
FENCE CORNER 1.1'N, 1.3'W
FIP 3/4" NO ID WITNESS CORNER
E.J. PETTIGREW SUBDIVISION PLAT BOOK 4, PAGE 112
SIR 5/8" LB 6938
WEST 84.5'(L)
S.89°48'15"W. 84.50'(M)
WEST 167.8'(L)
S.89°48'15"W. 168.31'(C)
S.89°48'15"W. 83.77'(C)
OLD 4'CLF DOWN IN MANY PLACES
UNABLE TO LOCK ORFIND CORNER 3'± PILE OF DEBRIS AROUND FENCE CORNER
FIP 1/2" NO ID
BENCHMARK REFERENCE
1. BENCH MARK USED
CITY OF BRADENTON #154
PUBLISHED ELEVATION 12.08 NGVD 29
LEGEND
LE=LINE DATA
(L)=CURVE DATA
CLF=CHAINLINK FENCE
C=CALCULATED
CONC=CONCRETE
CSW=CONCRETE SIDEWALK
COR=SHIP # UNREADABLE
D=DEED
FCC=FOUND CROSS CUT
FCM=FOUND CONCRETE MONUMENT
FDH=FOUND DRILL HOLE
FIP=FOUND IRON PIPE
FIR=FOUND IRON ROD
FN=FOUND NAIL
L=LEGAL
M=MEASUREMENT
MF=METAL FENCE
P=PLAT
PC=POINT OF CURVATURE
PCP=PERMANET CONTROL POINT
PI=POINT OF INTERSECTION
PF=PLASTIC FENCE
PK=PK NAIL
PLS=PROFESSIONAL LAND SURVEYOR
POB=POINT OF BEGINNING
POC=POINT OF COMMENCEMENT
POL=POINT ON LINE
PRC=POINT OF REVERSE CURVE
PRM=PERMANENT REFERENCE MONUMENT
P.R.=PUBLIC RECORD
PSM=PROFESSIONAL SURVEYOR AND MAPPER
PUE=PUBLIC UTILITY & DRAINAGE EASEMENT
(R)=RADIAL
ROW=RIGHT OF WAY
SDH=SET DRILL HOLE
SIR=SET 5/8" IRON ROD WITH CAP LB# 6938
SN=SET NAIL & DISK LB #6938
WF=WOOD FENCE
LINE DATA
Line | Bearing | Distance
L1(L) | S.01°25'49"E. | 7.00'
L2(L) | S.43°29'23"W. | 9.90'
L2(C&M) | S.43°31'19"W. | 9.92'
NOTES
1.THE ACCURACY OF THIS SURVEY MEETS REQUIRMENTS AS SET FORTH IN 5J-17.051(3)(B)(15)B.II SUBURBAN: LINEAR: 1 FOOT IN 7,500 FEET
2.BEARINGS ARE BASED ON PLAT OR OTHERWISE SHOWN
3.THE LEGAL DESCRIPTION SHOWN HEREON IS PROVIDED BY CLIENT UNLESS NOTED OTHERWISE.
4.THERE MAY BE ADDITIONAL RESTRICTIONS AND/OR EASEMENTS THAT ARE NOT RECORDED ON SAID PLAT THAT MAY BE FOUND IN THE PUBLIC RECORDS OF THIS COUNTY.
5.THE BUILDING DIMENSION HEREON ARE TO THE NEAREST TENTH OF A FOOT AND SHOULD NOT BE USED FOR DESIGN USE OF ANY KIND.
6. THE CLIENT AGREES TO LIMIT THE SURVEYOR'S LIABILITY TO THE CLIENT ON THE PROJECT DUE TO ANY CLAIM OF ANY NATURE WHATSOEVER ARISING OUT OF OR RELATING TO THE SURVEY, SUCH AS THE TOTAL AGGREGATE LIABILITY OF THE SURVEYOR TO ALL THOSE NAMED SHALL NOT EXCEED THE SURVEYOR'S TOTAL FEE FOR SERVICES RENDERED.
7. OWNERSHIP OF FENCES, IF ANY, WERE NOT DETERMINED AS PART OF THIS SURVEY.
8. REUSE OF THIS SURVEY FOR THE PURPOSE OTHER THAN WHICH IT WAS INTENDED, WITHOUT WRITTEN VERIFICATION, WILL BE AT THE REUSERS SOLE RISK AND WITHOUT LIABILITY TO THE SURVEYOR. NOTHING HEREIN SHALL BE CONSTRUED TO GIVE ANY RIGHTS OR BENEFITS TO ANYONE OTHER THAN THOSE CERTIFIED.
9. ELEVATIONS SHOWN HEREON ARE BASED ON NORTH AMERICAN VERTICAL DATUM OF 1988, UNLESS OTHERWISE NOTED.
10. UNDERGROUND ENCROACHMENTS IF ANY NOT LOCATED.
LEGAL DESCRIPTION :
BEGIN 109.5 FEET EAST AND 25 FEET SOUTH OF THE INTERSECTION LINE OF ACADEMY AND GRIFFIN STREETS, THENCE EAST 95.2 FEET TO A FENCE; THENCE SOUTHWESTERLY ALONG SAID FENCE 210 FEET; THENCE WEST 167.8 FEET TO THE EAST PROPERTY LINE OF GRIFFIN STREET, THENCE NORTH 74 FEET; THENCE EAST 84.5 FEET; THENCE NORTH 136 FEET TO THE POINT OF BEGINNING, ALL LYING AND BEING SITUATED IN MANATEE COUNTY, FLORIDA, FLORIDA.
LESS: WEST ONE-HALF 1/2 OF LOT IN THE CITY OF MANATEE, FLORIDA, FACING 17TH STREET (FORMERLY GRIFFEN STREET) HAVING A FRONTAGE OF 74 FEET AND RUNNING EAST 84.5 FEET. LOCATED ON THIS LOT IS A CONCRETE BLOCK HOUSE BUILT BY PROF. KENDALL AS AN INDUSTRIAL INSTITUTE, MORE PARTICULARLY DESCRIBED AS FOLLOWS; BEGIN 25 FEET EAST AND 161 FEET SOUTH OF THE INTERSECTION LINE OF ACADEMY AND GRIFFEN STREETS; THENCE EAST 84.5 FEET; THENCE SOUTH 74 FEET; THENCE WEST 84.5 FEET; THENCE NORTH 74 FEET TO THE POINT OF BEGINNING.
CERTIFICATION
I CERTIFY THAT THIS SURVEY WAS MADE UNDER MY DIRECTION AND THAT IT MEETS THE STANDARDS OF PRACTICE SET FORTH BY THE BOARD OF PROFESSIONAL LAND SURVEYORS AND MAPPERS IN CHAPTER 5J-17.051— 5J-17.052, FLORIDA ADMINISTRATIVE CODE, PURSUANT TO SECTION 472.027, FLORIDA STATUTES.
BY: M. SCOTT CRIDER, PSM #5671
SURVEY DATE : 08/27/2019
FIP 1/2" NO ID
NOT A CERTIFICATION OF TITLE, ZONING, EASEMENTS OR FREEDOM OF ENCUMBRANCES.
"UNLESS IT BEARS THE SIGNATURE AND THE ORIGINAL RAISED SEAL OF A FLORIDA LICENSED SURVEYOR AND MAPPER THIS DRAWING, SKETCH, PLAT OR MAP IS FOR INFORMATIONAL PURPOSES ONLY AND IS NOT VALID"
THIS SURVEY/REPORT IS PROVIDED IN HARD COPY FORMAT ONLY, ALL GRAPHIC AND TEXT DATA IS COPYRIGHTED.
LEGEND
5.51 =GARAGE FLOOR ELEVATION
6.50 =RESIDENCE FLOOR ELEVATION
6.0 =EXISTING ELEVATIONS
NOTE:
THIS IS A LIMITED TOPOGRAPHIC SURVEY AND MAY NOT MEET ALL REQUIREMENTS SET FORTH IN 5J-17.052(12) THE PURPOSE IS TO SHOW EXISTING SITE ELEVATIONS ONLY.
CERTIFIED TO :
MEDI - REDI MEDICAL TRANSPORT
DRAWN BY: S.C.
REVISIONS
9-18-19 ADDED LENDER
4-08-20 ADDED ELEVATIONS
5-05-20 ADDED PROPOSED IMPROVEMENTS
FIELD BOOK 396-70
PROJECT NO: 20_M39509A

CLEMENTS SURVEYING, INC.
509 8th Avenue West, Ste. 140
Palmetto, Florida 34221
Phone: 729-6690 Fax: 729-7580

MEMBER OF:
Florida Society Of Professional Surveyors & Mappers
Manatee County Chamber of Commerce
Manasota Chapter Of Professional Surveyors & Mappers

BOUNDARY SURVEY OF LOT - BLOCK - SUBDIVISION **SEE DESCRIPTION**
SECTION **30** TOWNSHIP **34** SOUTH, RANGE **18** EAST, AS RECORDED IN PLAT BOOK - PAGES -
OF THE PUBLIC RECORDS OF MANATEE COUNTY, FLORIDA PARCEL ID # **1270500000** CURRENT ZONING **N/A**
PROPERTY ADDRESS: ***1710 MANATEE AVENUE EAST, BRADENTON, FLORIDA 34208***

SCALE 1"= 30'

Exclusive Use Of:
MRT SOLUTIONS, LLC.

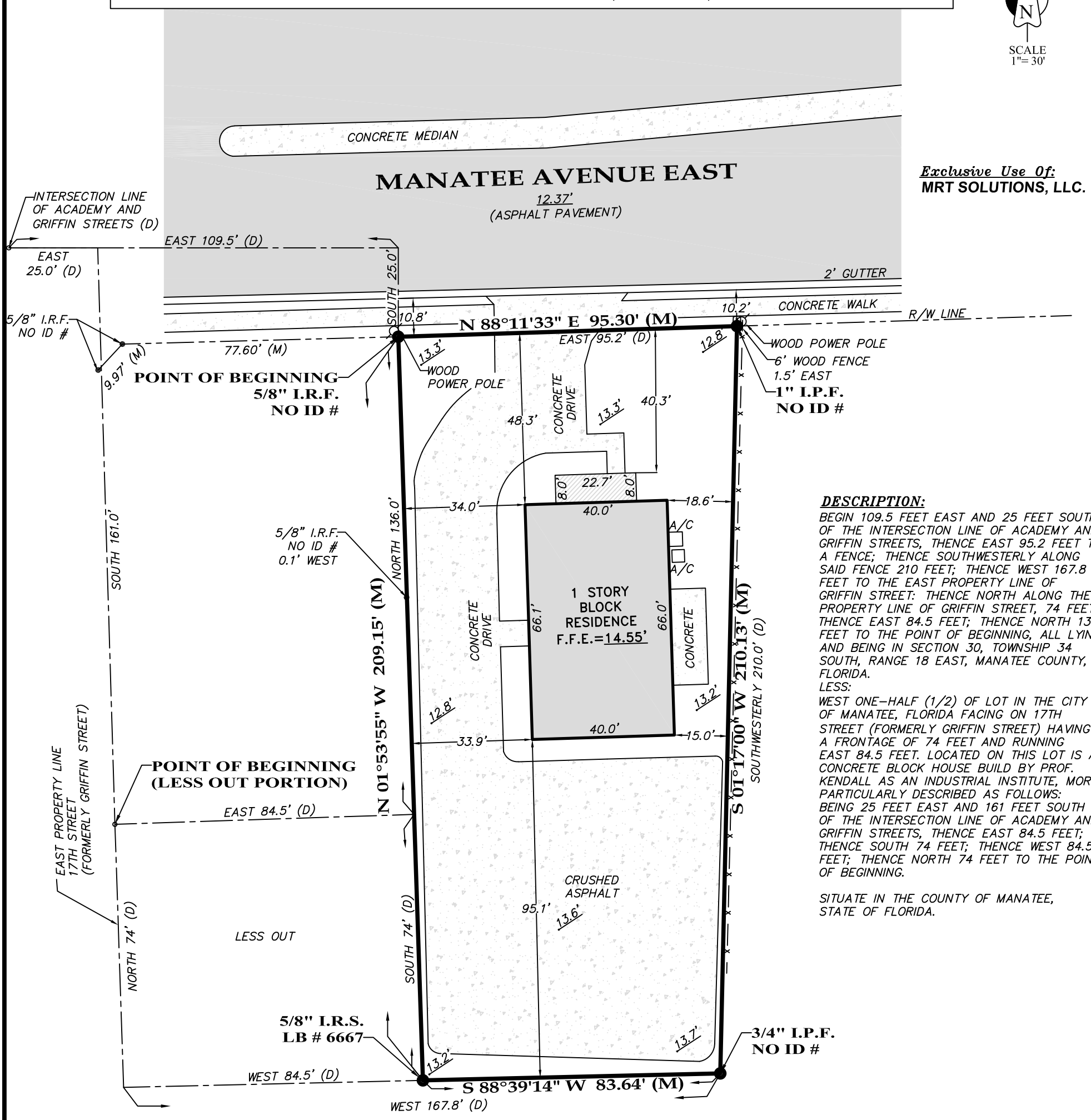

DESCRIPTION:

BEGIN 109.5 FEET EAST AND 25 FEET SOUTH OF THE INTERSECTION LINE OF ACADEMY AND GRIFFIN STREETS, THENCE EAST 95.2 FEET TO A FENCE; THENCE SOUTHWESTERLY ALONG SAID FENCE 210 FEET; THENCE WEST 167.8 FEET TO THE EAST PROPERTY LINE OF GRIFFIN STREET: THENCE NORTH ALONG THE PROPERTY LINE OF GRIFFIN STREET, 74 FEET; THENCE EAST 84.5 FEET; THENCE NORTH 136 FEET TO THE POINT OF BEGINNING, ALL LYING AND BEING IN SECTION 30, TOWNSHIP 34 SOUTH, RANGE 18 EAST, MANATEE COUNTY, FLORIDA.

LESS:

WEST ONE-HALF (1/2) OF LOT IN THE CITY OF MANATEE, FLORIDA FACING ON 17TH STREET (FORMERLY GRIFFIN STREET) HAVING A FRONTAGE OF 74 FEET AND RUNNING EAST 84.5 FEET. LOCATED ON THIS LOT IS A CONCRETE BLOCK HOUSE BUILD BY PROF. KENDALL AS AN INDUSTRIAL INSTITUTE, MORE PARTICULARLY DESCRIBED AS FOLLOWS: BEING 25 FEET EAST AND 161 FEET SOUTH OF THE INTERSECTION LINE OF ACADEMY AND GRIFFIN STREETS, THENCE EAST 84.5 FEET; THENCE SOUTH 74 FEET; THENCE WEST 84.5 FEET; THENCE NORTH 74 FEET TO THE POINT OF BEGINNING.

SITUATE IN THE COUNTY OF MANATEE, STATE OF FLORIDA.

NOTES:

BEARINGS ARE BASED ON THE SOUTHERLY RIGHT OF WAY LINE OF MANATEE AVENUE EAST, BEING N88°11'33"E (GRID), UTILIZING THE FLORIDA PERMANENT REFERENCE NETWORK (FLORIDA WEST ZONE).

PROPERTY LIES WITHIN FLOOD ZONE "X", AS PER FLOOD INSURANCE RATE MAP PANEL NO. 12081C0306F, DATED 08-10-2021, (SUBJECT TO VERIFICATION).

THIS SURVEY WAS PREPARED WITHOUT THE BENEFIT OF A CURRENT TITLE REPORT, THEREFORE IS SUBJECT TO ALL RESTRICTIONS, EASEMENTS AND RIGHTS OF WAY OF RECORD, IF ANY.

UTILITIES SHOWN HEREON ARE ABOVE GROUND (VISIBLE) UTILITIES ONLY, NO UNDERGROUND UTILITIES, IF ANY WERE LOCATED FOR THE PURPOSE OF THIS SURVEY.

JAMES L. CLEMENTS LICENSE NUMBER No. 6667 STATE OF FLORIDA PROFESSIONAL SURVEYOR & MAPPER

Job No. **2020-386**
Boundary **11-12-2020** FB **273** PG **21** Other:
Foundation **12-03-2020** FB **274** PG **15** Other:
Final **04-26-2021** FB **LL** PG Revision:
Update **03-04-2025** FB **LL** PG Revision:
Drawn By **JJ/JC/JRA**

CERTIFICATION OF SURVEYOR

BY: James L Clements
JAMES L. CLEMENTS, P.S.M. # 4091
Licensed Business No. 6667

DATE OF CERTIFICATION 03-05-2025

NOT VALID WITHOUT THE SIGNATURE AND THE ORIGINAL RAISED SEAL OF A FLORIDA LICENSED SURVEYOR AND MAPPER

LEGEND

(M)=Measured (P)=Plat (D)=Deed (R) = Radial
○=Iron Rod Set(IRS)#6667 ◎=Iron Pipe Found (IPF)
TBM=Temporary Bench Mark POB=Point Of Beginning
CMS=Concrete Monument Set #6667 R/W=Right Of Way
P.T.=Point of Tangent
PCC=Point of Compound Curve
CMF=Concrete Monument Found
PRM=Permenent Reference Monument
P.C.=Point Of Curve
=Water Flow
N&D=Nail and Disc
⬭=Proposed Elevation
⊙=Iron Rod Found(IRF)
PRC=Point of Reverse Curve
POC=Point Of Commencement
0.00'=Existing Elevation

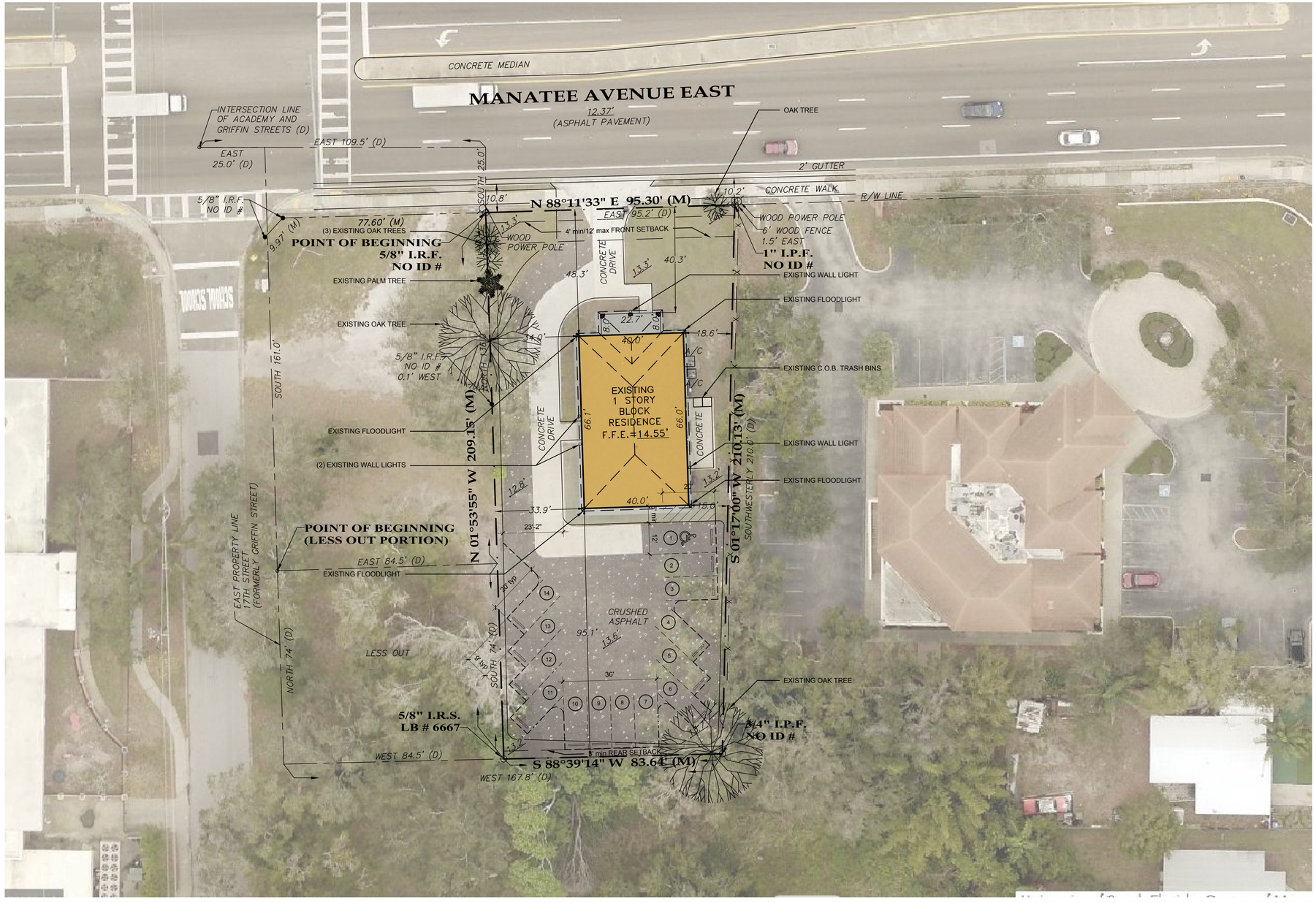

PARKING DETERMINATION CALCULATIONS

SPACE FUNCTION	AREA	FBC OCC FACTOR	OCC LOAD	PARKING FACTOR	PARKING LOAD
KITCHEN	170	200	0.85		
ASSEMBLY	532	15	35.47	1/3	11.82
OFFICE	853	150	5.69	500	1.71
STORAGE	167	300	0.56		
WALLS, HALLWAYS, TOILETS and MECHANIC	918				
TOTAL	2,640		42.56		13.53
PARKING PROVIDED					**14**

1 SPECIAL USE SITE PLAN

SCALE: 1" = 20'-0"

N

0 10' 20' 40'

REVISIONS

DRAWN BY CS3

CHESTER C SCOTT III AR11553 — STATE OF FLORIDA — SEAL — CHESTER C. SCOTT — 11553 — 03/07/2025 — REGISTERED ARCHITECT — TINA RENE LONG-FORSUND ART5465

This item has been digitally signed and sealed by Chester C. Scott, III using a Digital Signature and Date. Printed copies of this document are not considered signed and sealed and the signature must be verified on any copies.

Studio x 2 architects, pa
510 7th Street East
Bradenton . Florida . 34208
941 . 747 . 0220
www.studiox2architects.com

Studio x 2 architects.pa AA26002289

Jackson Event Space
Manatee Avenue East
Special Use Site Plan
1710 Manatee Avenue East, Bradenton, Florida 34208

JOB NO 2025006

SU1.1

of -

DATE 03/07/2025

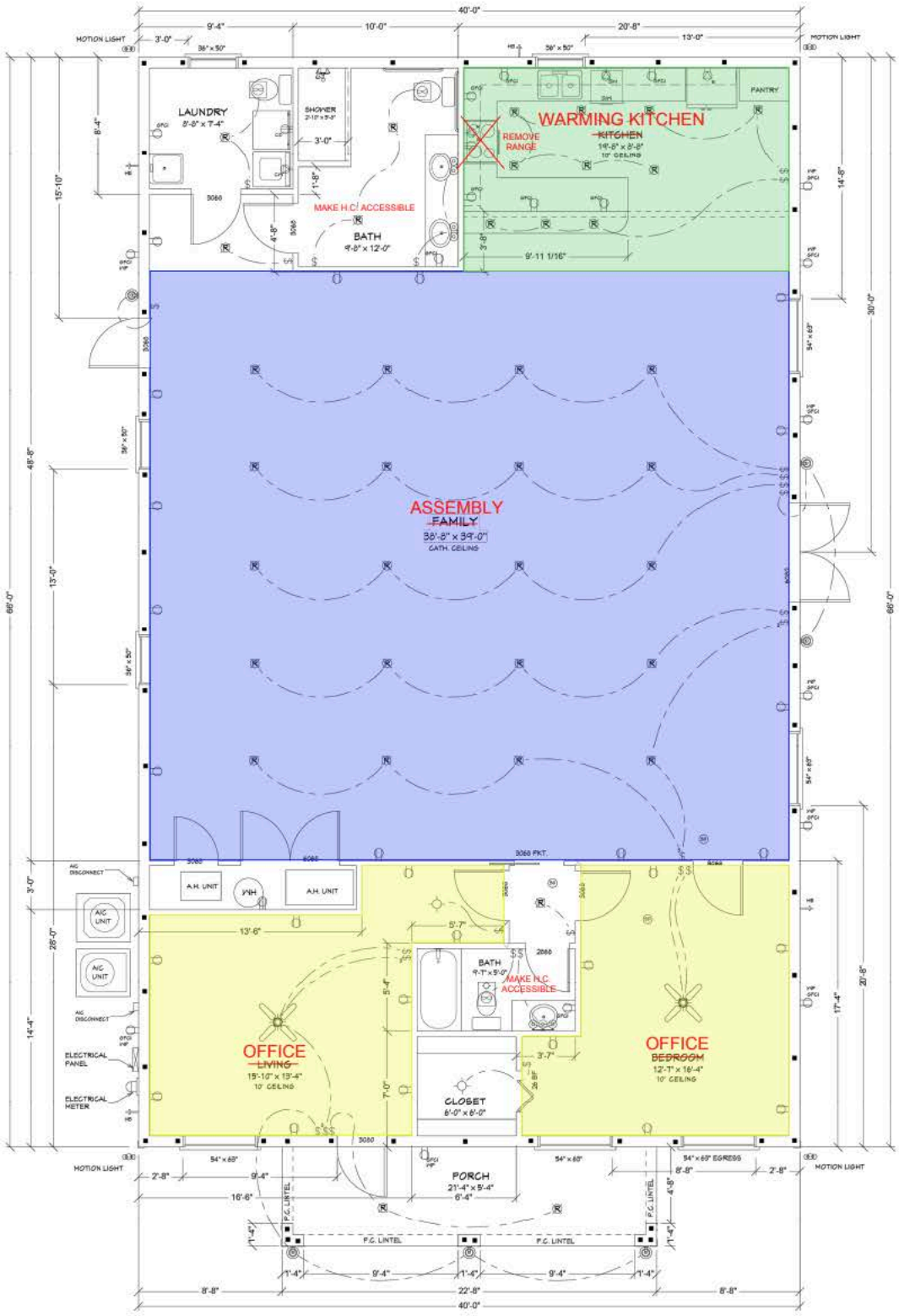

KITCHEN
243 sf
OCCUPANT LOAD FACTOR = 200 GROSS
OCCUPANT LOAD = 1.22

ASSEMBLY
1,379 sf
OCCUPANT LOAD FACTOR
(UNCONCENTRATED) = 15 NET
OCCUPANT LOAD = 91.93

~~BUSINESS AREA~~
~~473 sf~~
~~OCCUPANT LOAD FACTOR = 100 GROSS~~
~~OCCUPANT LOAD = 4.73~~

TOTAL OCCUPANT LOAD
1.22+91.93+3.15 = 96.3 = 97

PARKING REQUIREMENTS
OFFICE: 473 sf / 500 = 1
ASSEMBLY: 92 / 3 = 31
TOTAL = 32 SPACES

FLOOR PLAN

SCALE 1/4" = 1'-0"

FOUNDATION DESIGN BASED ON MINIMUM OF 2000 PSF BEARING CAPACITY.
GENERAL CONTRACTOR SHALL HAVE GEOTECHNICAL FIRM VERIFY PRIOR TO POURING FOOTINGS.

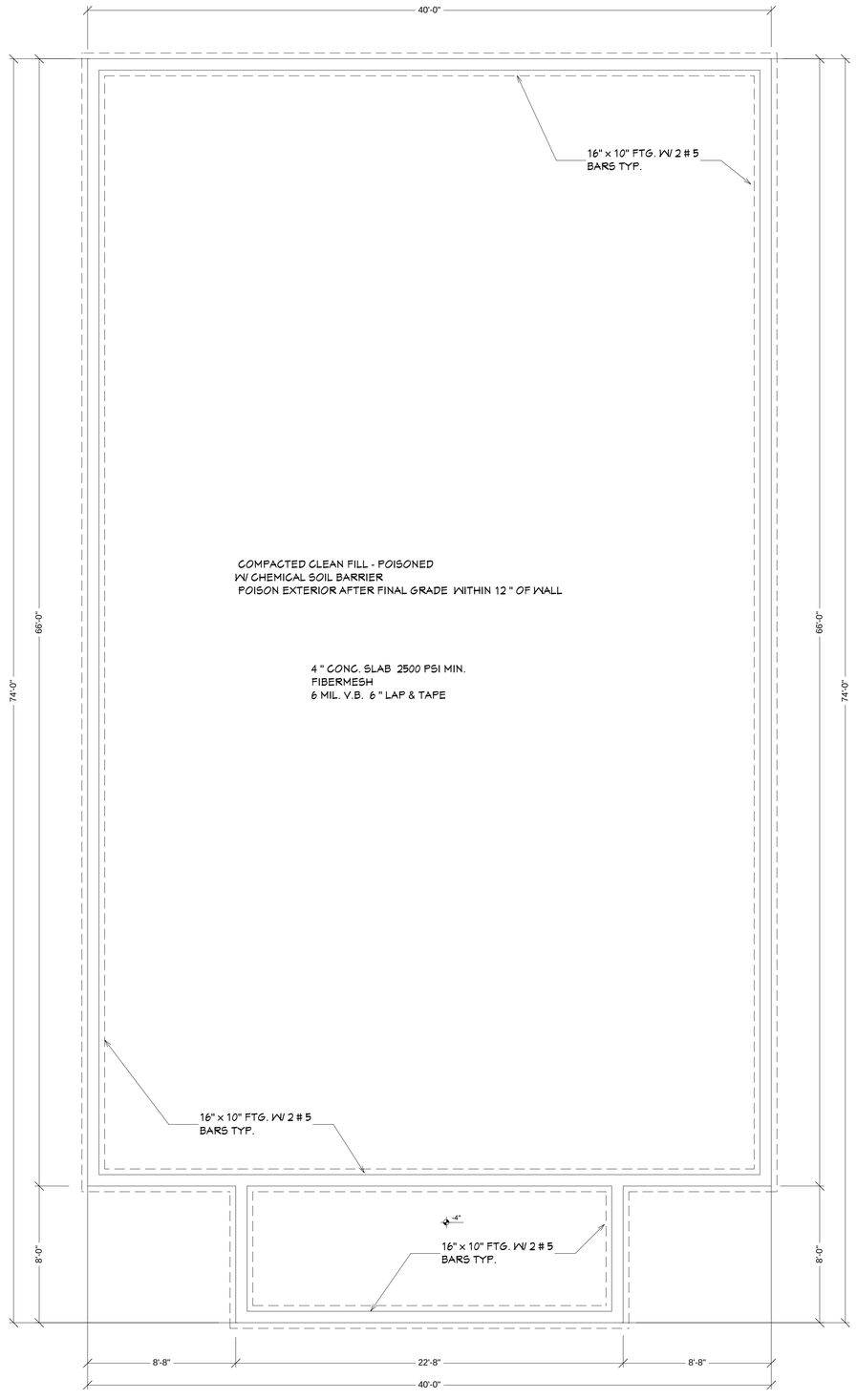

FOUNDATION PLAN SCALE 1/4" = 1'-0"

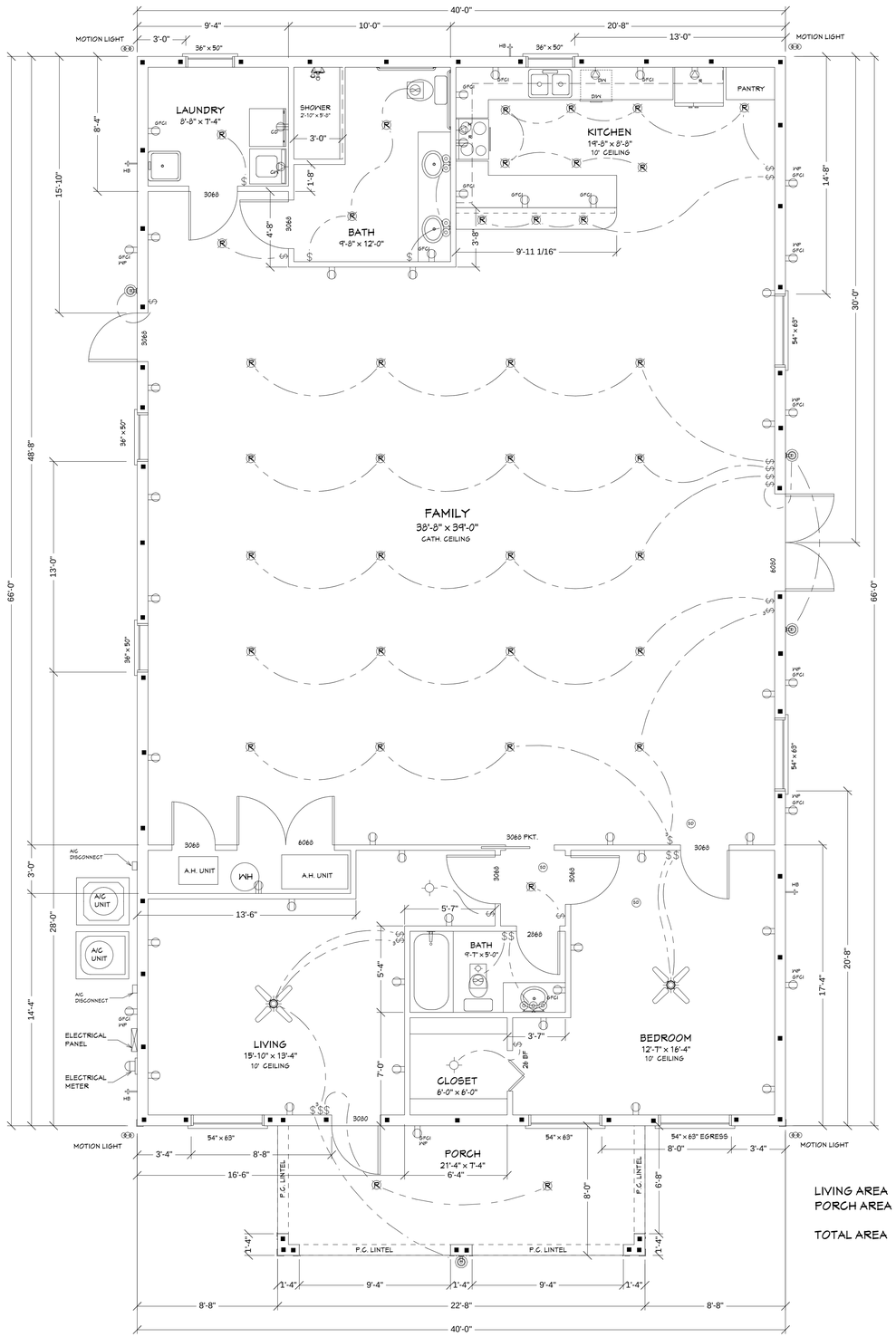

LIVING AREA 2640 SQ. FT.
PORCH AREA 182 SQ. FT.

TOTAL AREA 2822 SQ. FT.

FLOOR PLAN SCALE 1/4" = 1'-0"

DO NOT SCALE PLANS.
CONTRACTOR TO VERIFY ALL ASPECTS OF THIS PLAN PRIOR TO THE START OF CONSTRUCTION.
COPYRIGHT 2014

COKER
ZIMMERMANN
DRAFTING & DESIGN SERVICE
2302 9 th ST. W. BRADENTON, FLA.
PH. 941-746-5221

BUILDING PLANS FOR:

1710 MANATEE AVENUE EAST
BRADENTON, FL.

SEAL

9.5\PLANS\WZ

SEPT. 2019

1
3

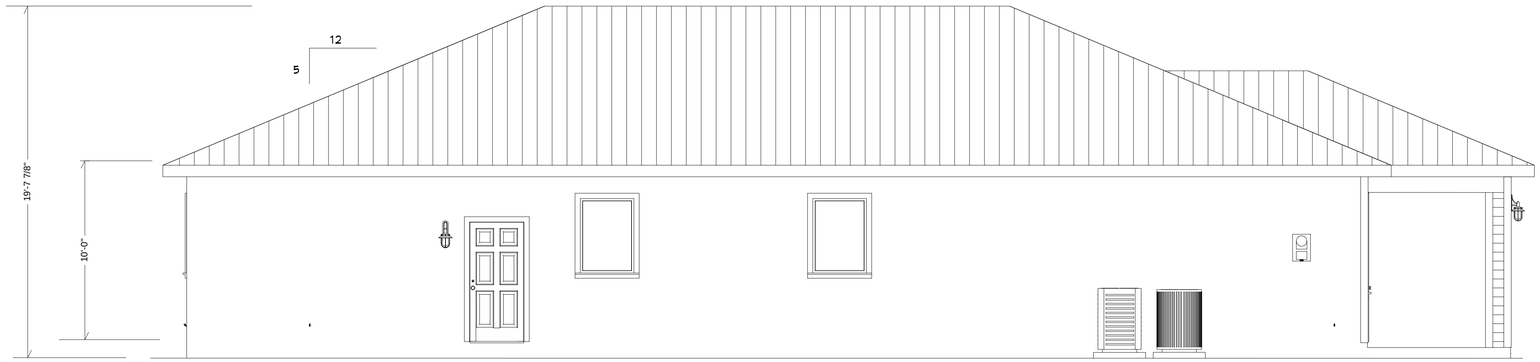

WEST ELEVATION SCALE 1/4" = 1'-0"

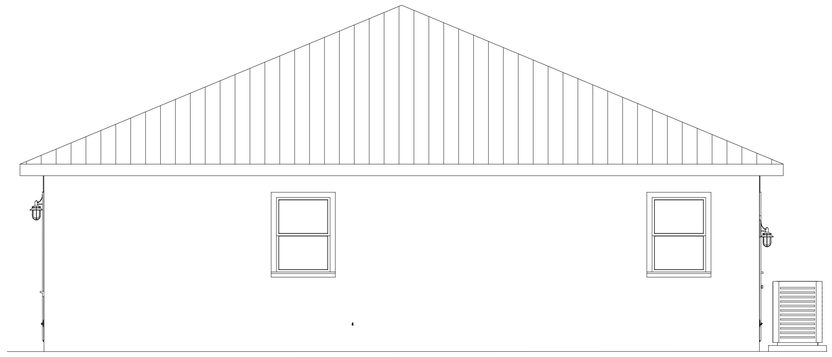

SOUTH ELEVATION SCALE 1/4" = 1'-0"

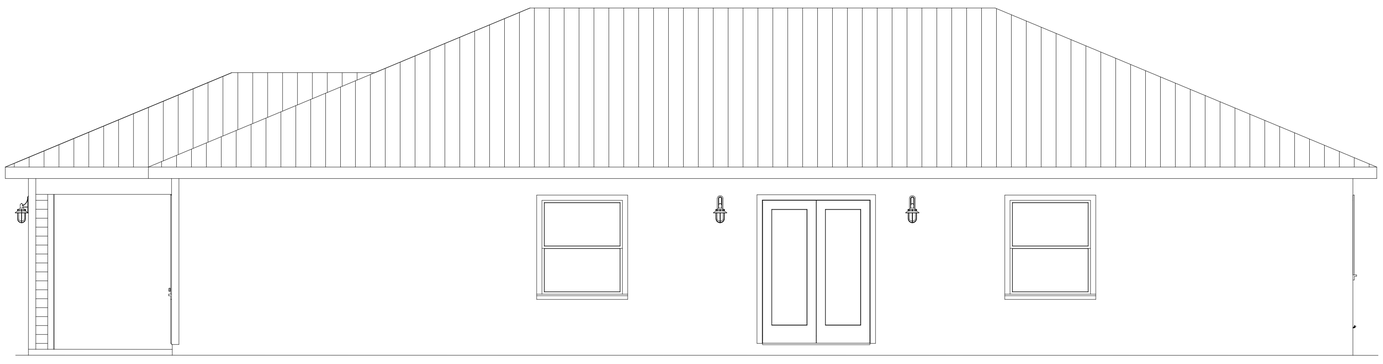

EAST ELEVATION SCALE 1/4" = 1'-0"

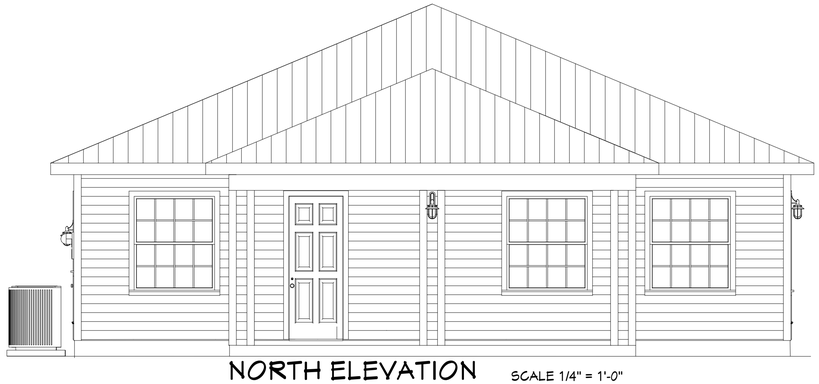

NORTH ELEVATION SCALE 1/4" = 1'-0"

THE ARCHITECT OF RECORD DELEGATES THE DESIGN OF THE PRE-ENGINEERED TRUSSES TO A TRUSS DESIGN ENGINEER AND A TRUSS SYSTEM DESIGN ENGINEER. BOTH ENGINEERS MUST HAVE CURRENT FLORIDA PROFESSIONAL ENGINEERING LICENSES AND BE QUALIFIED TO PERFORM THE DELEGATED DESIGN WORK.

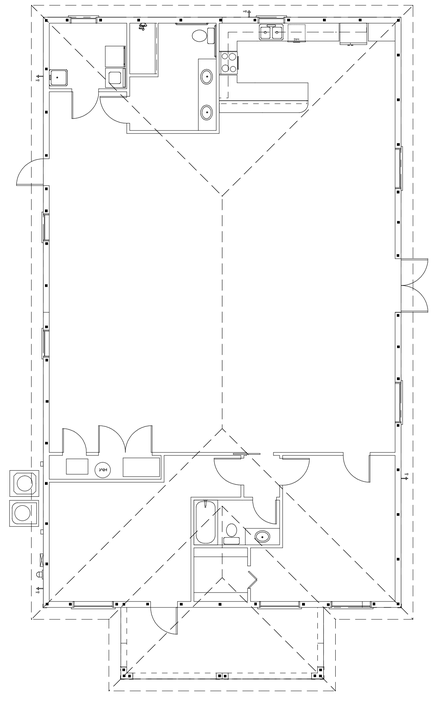

ROOF PLAN

SCALE 1/8" = 1'-0"

DO NOT SCALE PLANS.
CONTRACTOR TO VERIFY ALL ASPECTS OF THIS PLAN PRIOR TO THE START OF CONSTRUCTION.
COPYRIGHT 2019

COKER ZIMMERMANN
DRAFTING & DESIGN SERVICE
2302 9th ST. W. BRADENTON, FLA.
PH. 941-746-5221

BUILDING PLANS FOR:

1710 MANATEE AVENUE EAST
BRADENTON, FL.

SEAL

9.5\PLANS\W2

SEPT. 2019

2
3

WOOD FRAMING NOTES:

1. WOOD CONSTRUCTION, CONNECTIONS AND NAILING REQUIREMENTS SHALL CONFORM TO THE "FLORIDA BUILDING CODE".
2. ALL WOOD FRAMING MATERIAL SHALL BE SURFACED DRY AND USED AT 19% MAXIMUM MOISTURE CONTENT.
3. ALL LOAD BEARING WALL FRAMING SHALL BE NO. 2 GRADE SPF OR HEM-FIR.
4. ALL JOIST AND RAFTER FRAMING SHALL BE NO. 2 GRADE, SOUTHERN PINE OR HEM-FIR.
5. ALL FRAMING EXPOSED TO THE WEATHER OR IN CONTACT WITH MASONRY OR CONCRETE SHALL BE PRESSURE-TREATED IN ACCORDANCE WITH THE AMERICAN WOOD PRESERVERS ASSOCIATION SPECIFICATIONS.
6. BOLT HEADS SHALL BE CAREFULLY CENTERED AND DRILLED NOT MORE THAN 1/16" LARGER THAN THE BOLT DIAMETER. BOLTED CONNECTIONS SHALL BE SNUGGED TIGHT BUT NOT TO THE EXTENT OF CRUSHING WOOD UNDER WASHERS.
7. PREFABRICATED "MICRO-LAM" LUMBER HEADERS AND BEAMS SHALL AS MANUFACTURED BY "TRUSS JOIST MacMILLIAN CORP." BOISE, IDAHO OR APPROVED EQUAL. DO NOT CUT OR NOTCH MICRO-LAM MATERIAL WITHOUT THE MANUFACTURER'S APPROVAL.
8. PREFABRICATED METAL JOIST HANGERS, HURRICANE CLIPS, HOLD-DOWN ANCHORS AND OTHER ACCESSORIES SHALL BE AS MANUFACTURED BY "SIMPSON STRONG TIE COMPANY", OR EQUAL. INSTALL ALL ACCESSORIES AS PER THE MANUFACTUR'S REQUIREMENTS. ALL STEEL SHALL HAVE A MINIMUM THICKNESS OF 0.04 INCHES (PER ASTM A446, GRADE A) AND BE GALVANIZED (COATING G60).

ATTENTION: ALL SIMPSON CONNECTORS IN CONTACT WITH ACQ, CBA, CA-B, AND NON-DOT TREATED LUMBER MUST HAVE THE FOLLOWING:

SIMPSON STRONG TIE PRODUCT FINISH	FASTENERS
ZMAX (G185)	HOT DIPPED GALVANIZED
POST HOT DIPPED GALVANIZED (HDG)	HOT DIPPED GALVANIZED
SS7300 (STAINLESS STEEL)	STAINLESS STEEL

NOTE: ACZA TREATED LUMBER MUST HAVE ALL STAINLESS TIES AND FASTENERS.
NOTE: SBX (DOT SODIUM BORATE) TREATED LUMBER CAN HAVE EITHER THE ABOVE FINISHES OR STANDARD (G40)

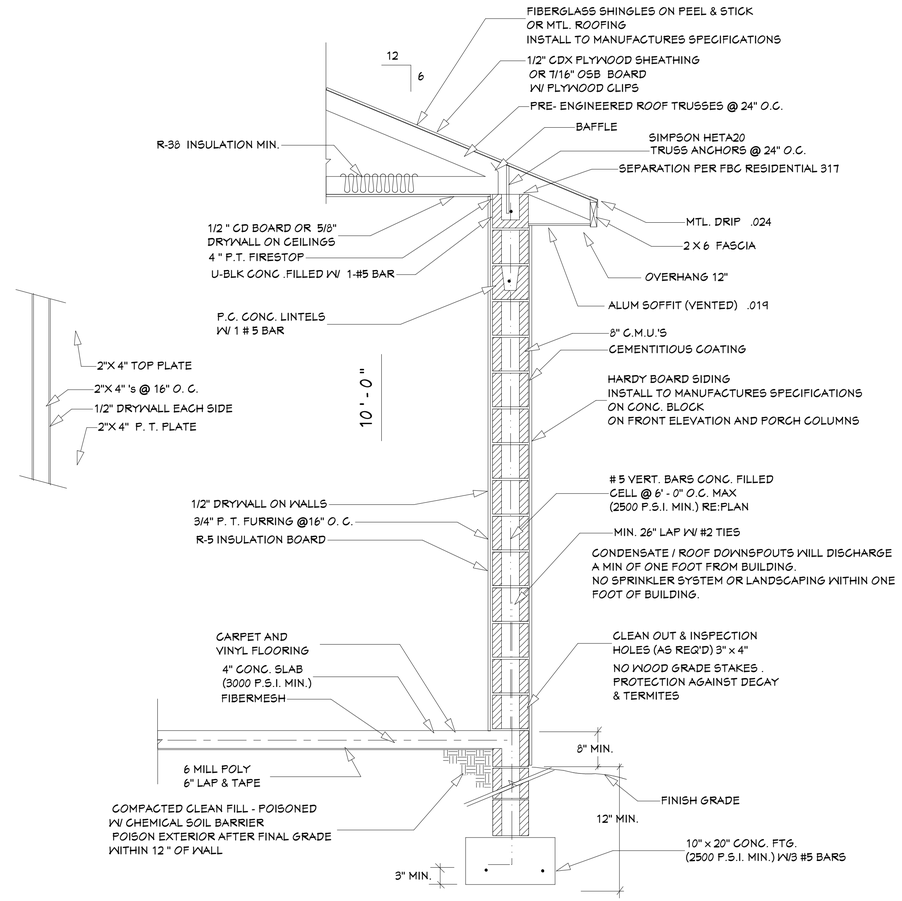

TYPICAL WALL SECTION

3/4 " = 1' - 0"

SAFE LOAD TABLE FOR CAST-CONCRETE
HIGH-STRENGTH
PRECAST & PRESTRESSED U LINTELS

	LENGTH	SAFE LOAD - POUNDS PER LINEAR FOOT	
		UNFILLED	FILLED *
L1	4' - 0" (48")	1,875 lbs.	8,408 lbs.
L2	4' - 6" (54")	1,860 lbs.	4,615 lbs.
L3	5' - 4" (64")	1,743 lbs.	4,615 lbs.
L4	5' - 10" (70")	1,575 lbs.	3,744 lbs.
L5	6' - 6" (78")	1,569 lbs.	3,260 lbs.
L6	7' -6" (90")	1,550 lbs.	2,557 lbs.
L7	9' - 4" (112")	1,025 lbs.	1,747 lbs.
L8	10' - 6" (126")	922 lbs.	1,333 lbs.
L9	11' - 4" (136")	800 lbs.	1,403 lbs.
L10	12' - 0" (144")	750 lbs.	1,304 lbs.
L11	13' - 4" (160")	651 lbs.	1,013 lbs.
L12	14' - 0" (168")	595 lbs.	924 lbs.
L13	14' - 8" (176")	563 lbs.	1,341 lbs.
L14	15' - 4" (184")	510 lbs.	1,210 lbs.
L15	17' - 4" (208")	397 lbs.	911 lbs.
L16	19' - 4" (232")	294 lbs.	823 lbs.

NOTES:
1. (FILLED *) ACTING AS A COMPOSITE BEAM TOTAL 16" ONE #5 BAR IN THE LINTEL, ONE #5 BAR IN KNOCK-OUT COURSE
2. FILLED PRECAST W/FILLED K.O. ABOVE UP TO 3 COURSES OF BLOCK MAY BE ADDED BETWEEN K.O. AND PRECAST AS NEEDED

DO NOT SCALE PLANS.
CONTRACTOR TO VERIFY ALL ASPECTS OF THIS PLAN PRIOR TO THE START OF CONSTRUCTION.
COPYRIGHT 2019

COKER
ZIMMERMANN
DRAFTING & DESIGN SERVICE
2302 9th ST. W. BRADENTON, FLA.
PH. 941-746-5221

BUILDING PLANS FOR:

1710 MANATEE AVENUE EAST
BRADENTON, FL.

SEAL

9.5\PLANS\W2

SEPT. 2019

3
3

City of Bradenton
Planning and Community Development Department
Planning Commission Public Hearing
April 16, 2025

Staff Report

Case Number: PLN-SUP-25-0007
Res. Number: 25-38
Applicant: Niketa Jackson (applicant and owner)
Owner: MRT SOLUTIONS, LLC
Address: 1710 Manatee Avenue East
Parcel ID No: 1270500000
Current Zoning: T4-O (General Urban Open – Transect District)
Future Land Use: UCC (Urban Commercial Corridor)
Flood Zone: X

Surrounding Property Zoning:

Current Zoning: North: T4-O (General Urban Open Transect District)
South: T4-O (General Urban Open – Transect District)
East: T4-O (General Urban Open Transect District) &
T4-R (General Urban Restricted – Transect District)
West: T4-O (General Urban Open – Transect District)

Future Land Use: North: UCC (Urban Commercial Corridor)
South: RESMED (Medium Density Residential)
East: UCC (Urban Commercial Corridor) &
RESMED (Medium Density Residential)
West: PS (Public/Private Schools)

Niketa Jackson (applicant and owner) of property located at 1710 Manatee Avenue East submitted a Special Use Permit application to allow for a Club (Event Center) to be located at the subject property.

It should be noted that the use (Club/Event Center) has been operating at the subject location without proper reviews or approvals from the city.

City of Bradenton Code Enforcement has an open code violation on the property for an Event Center operating without permits. On January 7, 2025, the Special Magistrate found the property in violation with 180 days to bring the property into compliance.

Following is a history of the property from 2019 to present. Information related to the said history is found in Exhibits "F" thru "Q":

- September 5, 2019: Pre-Application Meeting Request filed for an office building.
- May 12, 2020: Form Based Code Administrative Review Application filed for a new single-family residence.
- May 15, 2020: Form Based Code Adjustment filed for building setback.
- July 22, 2020: Building permit filed for new single-family residence.
- August 26, 2020: Building permit issued for new single-family residence.
- May 10, 2021: Final Survey submitted to the city showing a single-family residence.
- May 14, 2021: City issues a Certificate of Occupancy for a single-family residence.
- June 2021: Property owner begins to inquire about using the property as a commercial use.
- February 20, 2024: City Code Enforcement receives a complaint that the property is being used as an Event Center.
- January 7, 2025: Special Magistrate related to open violation.
- February 4, 2025: Pre-application meeting for event space.
- February 24, 2025: City Code Enforcement receives a complaint about the parking area and that events are still occurring.

In review of the Land Use Regulations (LUR), the regulations do not list any uses that are like an Event Center, Banquet Hall, Reception Center, etc.; therefore, staff determined that the subject use most closely meets the definition of a "Club" due to the services being provided (place of assembly, parties, receptions, etc.).

Following is a summary of property information and information about the proposed use:

- Property is .2617 acres in size and contains a single-story, 2,640 sq. ft. structure that was permitted as a single-family residence.
- Application materials state that the structure has a total occupancy load of 96.3.
    - Warming Kitchen: 1.22 occupancy load
    - Assembly: 91.93 occupancy load
    - Offices: 3.15 occupancy load
- Property currently contains a driveway that provides a single point of ingress/egress onto Manatee Avenue East.
- The applicant is proposing to widen the existing driveway and install a total of 14-parking spaces, which includes one handicap space.

- Required parking:
    - Assembly and Warming Kitchen: 1 per 3 visitors based on maximum capacity at assembly. 93.15 / 3 = 31 spaces.
    - Offices: 1 per 500 sq. ft. 416.64 sq. ft. / 500 = 0.83 spaces.
    - Total amount of parking required is 32 spaces.
        - With 14 parking spaces provided, that limits the proposed use to 42 guests.
    - If the applicant wishes to maximize the use at 96.3 guests, they will need an additional 18 spaces for a total of 32 off-street parking spaces, including required ADA spaces.
        - The applicant may obtain an off-site parking agreement if the number of vehicles exceeds the maximum parking capacity onsite.
- Applicant is proposing to remove the existing range in the kitchen and use the kitchen as a warming kitchen, therefore the kitchen would not need to be brought up to commercial standards.
- Applicant is proposing to make the building ADA compliant including the restroom facilities.

Per LUR Schedule 4.1.4.1. of the LUR, parking for the proposed use is 1 per 3 visitors based on maximum capacity of assembly. As stated, the applicant is proposing 14 onsite spaces.

LUR Section 4.1.4.2.a. states that parking for a particular land use must be provided on the premises of that land use, or, if approved by the PCD Director, within 400 ft. of the premises.

On February 4, 2025, the Development Review Committee (DRC) reviewed the proposed request and there were concerns brought up by various DRC team members. The concerns include the following:

Building Department:

- Change of Occupancy permit will be required. The permit must include intended use, occupancy, life safety plan, and required documents as listed in Florida Building Code chapter 10, sections 1001 – 1012.

Fire Department:

- Occupancy of the building is currently business, will now need to be assembly (can be addressed through Change of Occupancy Permit).
- Kitchen must be brought up to commercial cooking standards or removal the cooking appliances.
- Provide a Life/Safety Plan that includes a seating layout.

Public Works:

- Obtain Site Improvement Permit prior to obtaining any Building permits. Include any SWFWMD, FDOT documentation as part of your submittal paperwork.
- Provide a tree survey with existing tree count, including type and condition. Also provide a tree plan that shows preserved existing trees as well as proposed plantings. Tree replacement or payment into tree fund will be required at time of groundbreaking, according to LUR's Section 2.2.3.2.f. and Schedule 2.2.3.2 TREE REPLACEMENT REQUIREMENTS.
- A Pre-construction meeting is required prior to the commencement of any site construction. The owner, engineer and contractor must all be present.
- Four (4) sets of plans are required to be submitted (two for the original submittal), including pdf's of the plans on a CD.
- Allow time at the end of the project for the full inspection process, to include Building, Electrical, Engineering/Public Works and finally Zoning. Zoning will require all Landscaping to be complete and according to approved plans prior to issuance of CO.
- Construction schedules are per Code, and dictated by the City's noise ordinance, as follows:
    - Monday – Friday 7AM to 6PM
    - Saturday - 9AM to 6PM
    - No work on Sundays or Federal Holidays.
- Peak stormwater discharge must not go to street. Discharge must flow directly into storm water pipes. There is to be no overland flow to roads.

Planning & Zoning:

- Hours of operation.
- Business needs to ensure that they have filed for a Local Business Tax Receipt with the City.

FORM BASED CODE (FBC):

Table 4.7: Specific Function and Use

	T4-S					
	T-3	**T4-R**	**T4-O**	**T5**	**T6**	**SD**
e. Civic						
Club		SU	SU			SU

Article 12. Definitions of Terms

12.1 Intent

This Article provides definitions for terms in this Code that are technical in nature or that otherwise may not reflect a common usage of the term. If a term is not defined in this Article, then the CRC shall determine the correct definition. Items in italics refer to Articles, Sections, or Tables in the Code.

e. Civic Uses: any of the following uses, as defined in the use matrix, which are found to provide focal points for community interaction, recreation, cultural resource opportunities, and needed support services that foster citizen participation in civic activities.

xvii. Club: a facility used by a group of people organized for a common purpose to pursue common goals, interests or activities and usually characterized by certain membership qualifications, payment of fees and dues, regular meetings, and a constitution and bylaws.

LAND USE REGULATIONS (LUR):

Section 4.1.4 *On-site parking and vehicular access.*

On-site parking shall be provided for each business, residence, institution, or other land use in compliance with this subsection. See subsections 2.2.2 and 2.2.3 for permit requirements and procedures. The number of required on-site parking spaces for each type of land use and for handicapped persons is set forth in schedule 4.1.4.1. The PCD director may waive certain parking requirements in the PDP, UV, UC, and UCBD Land Use Atlas districts and planned redevelopment projects, and shall establish policies for equitably granting such waivers. Granting of a parking requirement waiver may require additional landscaping to be provided by the applicant pursuant to schedule 4.1.4.4.

Schedule 4.1.4.1 Automobile On-Site Parking Space Requirements

AMUSEMENT ESTABLISHMENTS	
Indoor or Non-Spectator	1 per 3 visitors based on maximum capacity of assembly

Section 4.1.4.2 *Location*.

a. The spaces required for a particular land use must be provided on the premises of that land use, or, if approved by the PCD director, within 400 feet of the premises. The required parking areas may be consolidated into a large parking area serving other businesses and uses. Such off-premises parking area shall be maintained, regulated, and enforced as if it were on the premises served. The

PCD director may require a deed, lease, or other reasonable proof necessary to show that the required off-premises parking area is controlled by and available to the applicant.

b. Parking areas serving non-residential uses shall not be located within a residential zone.

COMPREHENSIVE PLAN:

Future Land use Element

Policy 1.2.1 – Urban Commercial Corridor

Moderate density residential, offices, light commercial, retail, hotel, motels, restaurants, drive thru restaurants, personal and professional services, educational, social services, civic uses such as libraries and government offices, institutional uses such as churches, hospitals, and schools. Prohibited uses include open storage, auto sales, auto repair, gas stations, car washes. Outdoor storage is prohibited.

Private Property Rights Element

Policy 1 Statement of Rights

The following rights shall be considered in local decision making**:**

1. The right of a property owner to physically possess and control his or her interests in the property, including easements, leases, or mineral rights.
2. The right of a property owner to use, maintain, develop, and improve his or her property for personal use or the use of any other person, subject to state law and local ordinances.
3. The right of the property owner to privacy and to exclude others from the property to protect the owner's possession and property.
4. The right of a property owner to dispose of his or her property through sale or gift.

Compliance Overview with Land Use Regulations

Land uses requiring Special Use Permits are those which have the potential of disturbing other land uses in the zoning district. Because they are not necessarily compatible with land uses in the zone in which they are allowed, they require discretionary review. Special uses are permitted only if the use will be compatible with surrounding uses or can be made compatible through limitations of their operation or enhancements of the site development design. The Special Use Permit makes the stipulations of approval mandatory. The Special Use Permit is valid for the property on which it is issued for as long as the conditions are met unless the approval stipulates otherwise.

The following is a list of required Land Use Regulations subject to review for Special Use Permits:

GENERAL STANDARDS (LAND USE REGULATIONS):

3.3.1 *General standards.* All special uses shall comply at minimum with the following standards. Additional requirements may be made by city council to ensure compatibility of uses.

3.3.1.1 All special uses shall be subject to the general regulations of these LURs for single lot development, structures, lots, yards and vehicular use areas as well as the specific dimensional regulations for lots and structures for the zoning district in which the special use is proposed.

3.3.1.2 A landscaped separation strip of at least ten feet in width shall be provided along all property lines and along all streets serving the premises, except at approved access points.

3.3.1.3 If the use is listed as a specific use in section 4.3, the standards of that section must be met.

REVIEW CRITERIA (LAND USE REGULATIONS):

3.3.2 *Review criteria.* All special uses shall comply with and be reviewed using the following criteria to determine whether to allow the use at the proposed location and to determine appropriate conditions to the use.

3.3.2.1 The tract of land must be suitable for the type of use proposed by virtue of its location, topography, shape and the nature of surrounding development.

Staff Response: It appears that the proposed use of a club/event center at the subject property may not be suitable due to the lack of off-street parking on premise and the uncertainty of the building meeting building and fire codes for places of assembly.

3.3.2.2 Access points must be located so as to best suit the use and property. Wide spacing between access points and intersecting streets should be required when feasible.

Staff Response: Due to the uncertainty of the volume of vehicles exiting the property during and after events, it appears that the

access point may be negatively impacted as vehicles exit onto busy Manatee Avenue East.

3.3.2.3 All buildings shall be located an adequate distance from property lines and streets. Setbacks in excess of those required for the specific zone may be required to lessen the effect of the use on neighboring properties.

Staff Response: No new buildings will be constructed as part of the proposed use.

3.3.2.4 Permanent screening, such as walls, fences, hedges, and other barriers, may be required to protect surrounding properties from view of the premises or noises from the use. The minimum height and other parameters of such screening may be specified.

Staff Response: The applicant should consider screening the property to mitigate any possible issues with noise and glare onto neighboring properties.

3.3.2.5 The following shall be considered and cited as reasons for approval or denial of the application:

Please see submitted application materials for the applicant's responses.

a. Adequacy of ingress and egress to property and proposed structures with particular regard for automobiles and pedestrian safety and convenience, traffic generation, flow and control and emergency access.

   Staff Response: No new ingress and egress points are being proposed as part of the subject request. Due to the volume of traffic on Manatee Avenue East, safety of those leaving the property may be an issue depending on the size and scale of the events being held on the property.

b. Location and design of off-street parking and loading areas in regard to the items in "a." above and the smoke, noise, glare, dust, vibrations, fumes, pollution and other effects of the use on adjoining properties.

Staff Response: It does not appear that noise and glare may be an issue on adjacent properties since events are proposed to be within the existing structure.

c. Location and design of refuse and service areas in regard to availability, adequacy and effect upon surrounding properties.

Staff Response: It appears that the subject request will not affect the location and design of existing refuse and service areas. City Public Works did not state any concerns with refuse volume or pick-up during the Development Review Committee (DRC) review process.

d. Utilities, in regard to location, availability, adequacy and compatibility with surrounding properties.

Staff Response: It appears that the subject request will not affect or impact existing utilities.

e. Screening, buffering or separation of any nuisance or hazardous feature of the use.

Staff Response: No screening, buffering or separation are being proposed as the area is a built environment, although the applicant should consider means to screen the parking area.

f. Proposed signs and exterior lighting with reference to glare, traffic safety and compatibility and harmony with surrounding properties.

Staff Response: No new lighting or signage is being proposed as part of the subject request. Should any lighting or signage be installed in the future, it shall be in accordance with the City of Bradenton's requirements.

g. Effect upon the value of surrounding properties; the use shall not hinder the development of nearby vacant properties or adversely affect their economic value.

Staff Response: It appears that the subject request will not adversely affect the economic value of surrounding properties.

h. Adequacy of land and/or building which are to be used.

Staff Response: It appears that the land is adequate for the proposed use with stipulations applied on maximum occupancy, but there remain concerns about the building as it is unclear at this time if the building meets Building and Fire Codes for places of assembly.

i. General compatibility or appropriateness with adjacent properties and other property in the district with special consideration given to the proposed hours of operation.

Staff Response: It appears that the proposed request is compatible with adjacent properties as this area contains mainly commercial uses.

j. Environmental quality of the district in which the use is proposed and the effect the special use permit might have on such quality.

Staff Response: It appears that there will be no negative impacts to the existing environmental quality of the district as a result of the subject request.

k. Consistency with the city's comprehensive plan.

Staff Response: It appears that the proposed use is consistent with the City's Comprehensive Plan. The Urban Commercial Corridor Future Land Use designation states: Moderate density residential, offices, light commercial, retail, hotel, motels, restaurants, drive thru restaurants, personal and professional services, educational, social services, civic uses such as libraries and government offices, institutional uses such as churches, hospitals, and schools. Prohibited uses include open storage, auto sales, auto repair, gas stations, car washes. Outdoor storage is prohibited.

STAFF COMMENTS:

1. Planning Commission is encouraged to evaluate the request based on the provided criteria, as well as input from staff, the applicant, and the public.
2. It is in staff's opinion that the request is found to be consistent with the intent of Section 3.3.2.5 of the Land Use Regulations and the Design Element of the Comprehensive Plan.

Should the Planning Commission wish to recommend to City Council approval the subject request, staff recommends that the following stipulations be applied to the approval:

a. All events related to the reception center shall occur between the hours of 8am and 10pm.
b. All ADA designated parking spaces shall be on a solid paved surface and marked according to ADA requirements.
c. A Change of Occupancy permit must be approved, work completed, and final inspections approved prior to using the interior space for events. The permit must include intended use, occupancy, life safety plan, and required documents as listed in Florida Building Code Chapter 10, Sections 1001 – 1012. Said permit shall be applied for within 30 days of the Special Use Permit approval.
d. The Club/Event Center use shall be limited to a maximum of 42 guests unless the Applicant has in place an off-site parking agreement in a form acceptable to the City which provides for parking to accommodate additional attendees and has provided the City with a copy of the same. Additional attendees shall be limited to three for every off-site parking space provided, up to a maximum of 97 attendees or a number determined by the City of Bradenton Building Official and Fire Marshall based on building capacity, whichever is less.
e. Obtain Site Improvement Permit (SIP) prior to obtaining any Building permits.
f. Provide a tree survey with existing tree count, including type and condition. Also provide a tree plan that shows preserved existing trees as well as proposed plantings.
g. Kitchen must be brought up to commercial cooking standards or remove cooking appliances.

Respectfully submitted,

Gregory J. DeLong
Assistant Director of Planning & Community Development

EXHIBITS:

EXHIBIT "A": Location Map

EXHIBIT "B": Future Land Use Map

EXHIBIT "C": Zoning Map

EXHIBIT "D": Proposed Overall Project Site Layout

EXHIBIT "E": Proposed Building Layout

EXHIBIT "F": Pre-Application Meeting Request filed for an office building.

EXHIBIT "G": Form Based Code Administrative Review Application.

EXHIBIT "H": Form Based Code Adjustment Application.

EXHIBIT "I": Building permit single-family residence.

EXHIBIT "J": Building permit issued for new single-family residence.

EXHIBIT "K": Final Survey submitted for single-family residence.

EXHIBIT "L": Certificate of Occupancy for a single-family residence.

EXHIBIT "M": Property owner/city staff emails about other use types.

EXHIBIT "N": Code Enforcement violation of use as an Event Center.

EXHIBIT "O": Special Magistrate.

EXHIBIT "P": Pre-application meeting for Club/Event Center.

EXHIBIT "Q": City Code Enforcement complaint about parking lot and use.

EXHIBIT "A"
Location Map



PLN-SUP-25-0007 Reception Center
owner: MTR Solutions, LLC
1710 Manatee Avenue East
PID 1270500000

CITY OF BRADENTON FLORIDA
Bradenton Department of Planning and Community Development

Location
0 30 60 90
Yards

LEGEND
Subject Parcel
Other Parcels
Bradenton

EXHIBIT "B"
Future Land Use Map

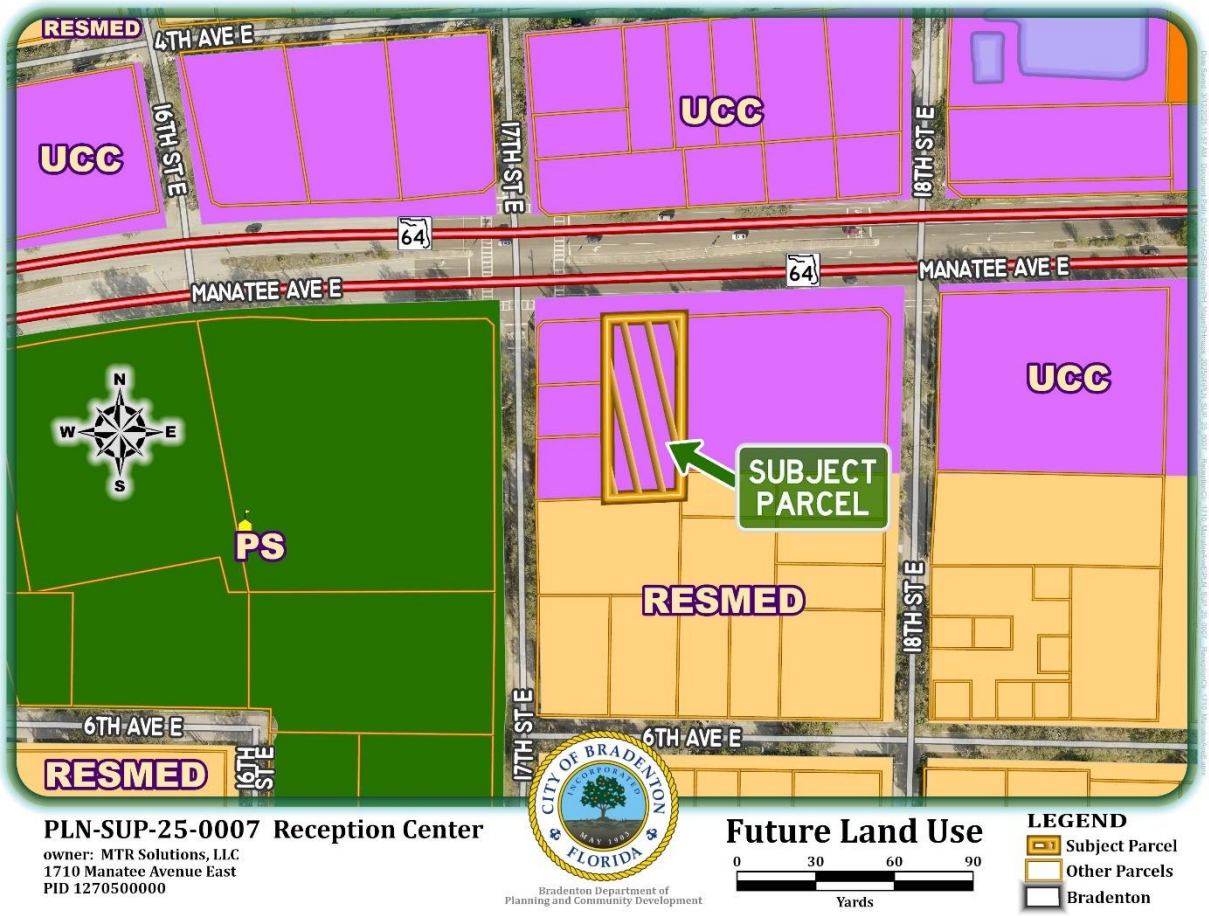

EXHIBIT "C"
Zoning Map

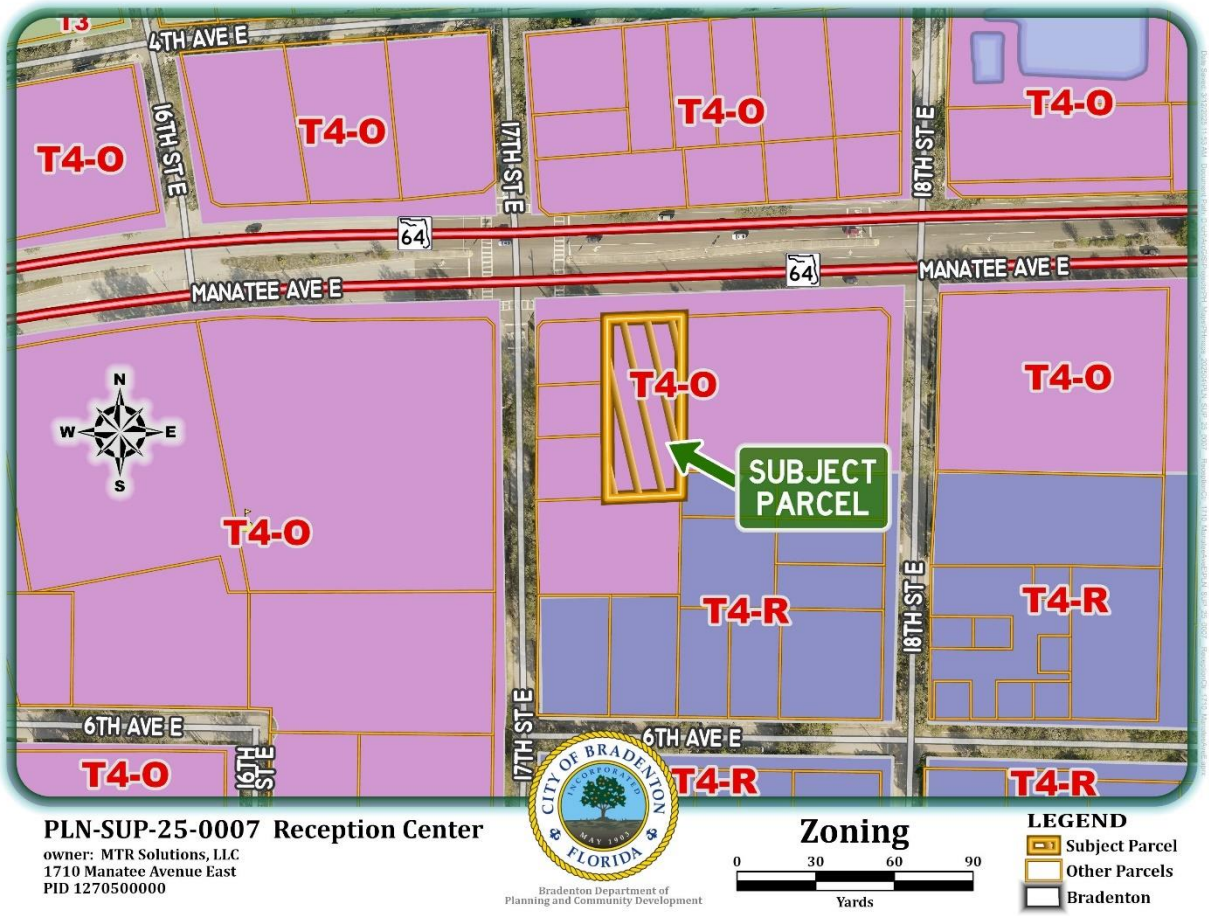

EXHIBIT "D"
Proposed Project Site Layout



EXHIBIT "E"
Proposed Building Layout

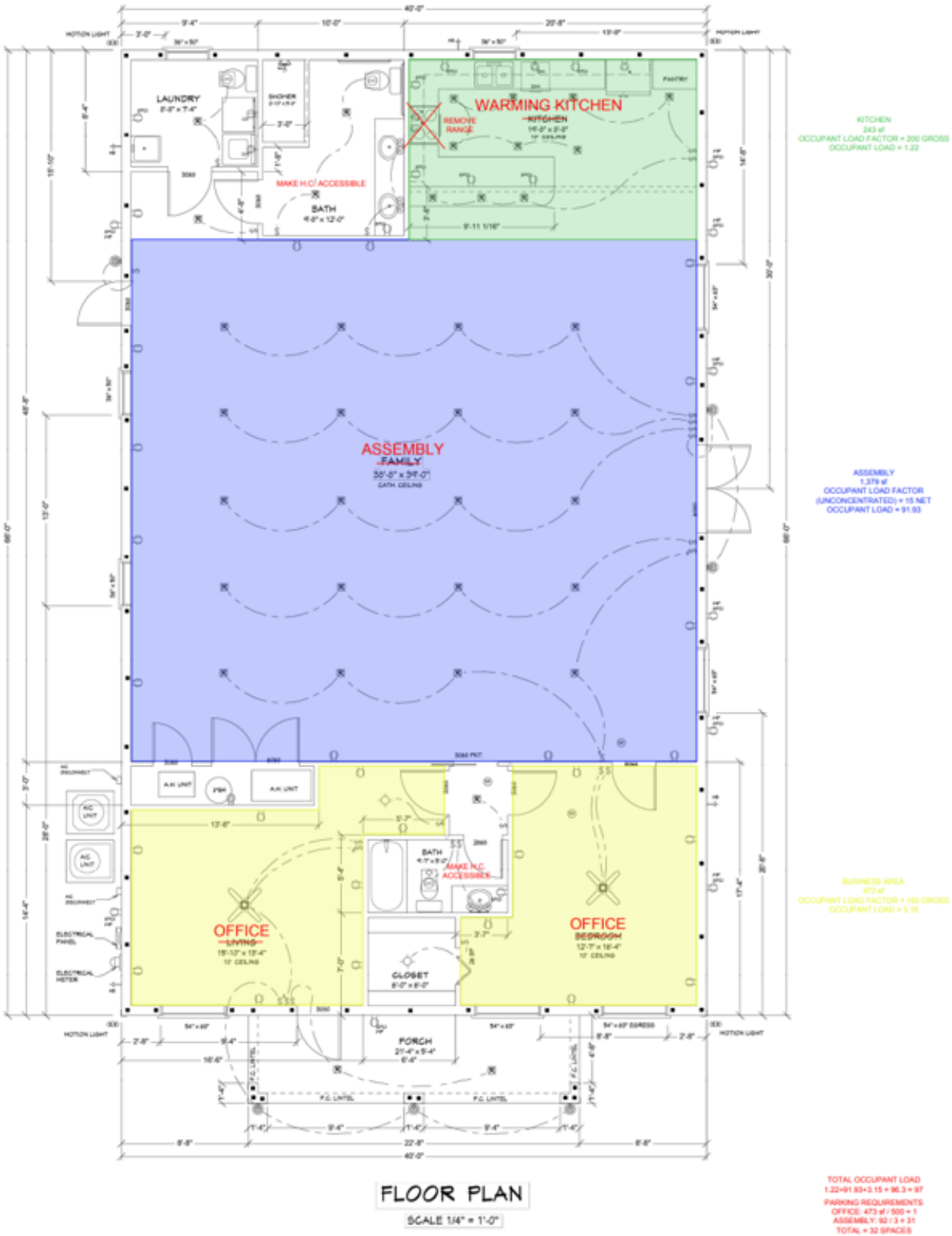

FLOOR PLAN

SCALE 1/4" = 1'-0"

Resolution 25-38; Case PLN-SUP-25-0007

EXHIBIT "F"
Pre-Application Meeting Request File for an Office Building

bradenton
The Friendly City

Pre-Application Meeting Request Form

Department of Planning & Community Development
101 Old Main Street, Bradenton, FL 34205
Ph: (941) 932-9407
www.cityofbradenton.com

CONTACT INFORMATION (REQUIRED)

Name of Property Owner: Elizabeth Hunt, Robin Van Driver, John Van Driver, Donna Von Drivr, Alice Louise White, Michael Bell

Owner Address: N/A Telephone:

Name of Agent: Pending purchase

Agent Address: N/A Telephone: HJAXON557@MSN.com

Owner/Agent Email: Horace Jackson 941-737-6143 email hsjaxon@msn.com.

PROPERTY INFORMATION (REQUIRED)

Property Address: 1710 Manatee Ave E. Bradenton, FL 34208

Parcel ID: 1370500000 Acreage: Flood Zone:

Zoning District: *click to view Zoning map

Future Land Use: *click to view FLU map

Ward #: *click to view Ward map

Neighborhood #: *click to view Neighborhoods map

RECEIVED
SEP - 5 2019
CITY OF BRADENTON PLANNING DEPT.

DESCRIPTION (REQUIRED)

Provide a brief description of the propose land use activity: to be used for an office building

MATERIALS FOR REVIEW (REQUIRED)

Before submitting an application to the City of Bradenton, please check with the Planning & Community Development Department to verify all essential information for review is present. Incomplete applications will delay the review process.

- ▶ Pre-Application Meeting Request form
- ▶ Proof of Ownership (deed) and Agent Authorization Form
- ▶ Application Fee: $100
- ▶ Two (2) copies of Site/Plot Plan, Floor Plan, Elevations (see page 2 for details)
- ▶ Additional information may be required for review, as needed
- ▶ One (1) electronic copy in pdf format of Application and all required support materials

SIGNATURE (REQUIRED)

The owner of this property and/or the undersigned understand and agree that completion of a Pre-Application Meeting does not vest a permit, application, or other type of development approval or any rights with regard to the development of this subject property. The information discussed and comments made by Staff during this meeting do not constitute or substitute for the formal review of your project and do not preclude future comments during project review. Staff provides only information known to them at the time and cannot anticipate a potential outcome of any development permit or application, even if so indicated at the meeting.

Nikita Jackson 9/5/19

Signature of Owner/Applicant Date

CITY STAFF ONLY

Application Fees:
Fee Required: **$100**
FEE COLLECTED: $ 100.00
RECEIPT #: 013839-0002

Application Sufficiency:
Sufficient: ☐
Incomplete: ☐

APPLICATION #: 19354

PRE-APPLICATION MEETING DATE/TIME: 9/24/2019 — REVIEW DATES – TO BE COMPLETED BY CITY STAFF

City of Bradenton, Florida
Department of Planning and Community Development

Pre-Application Meeting Staff Notes PM.19.3541

Applicant:	Horace Jackson							
Property Address:	1710 Manatee Avenue East							
Meeting Date:	9/24/2019	**Time:**	2:30pm	**Staff:**	MM, MRS			
Project:	Construct office building for transportation business							
Ward:	5					**Acreage:**	.26	
Parcel ID:	1270500000			**Flood Zone:**	X			
Request:	Review and provide comment and direction			**Permitted Use?**	Office, yes – open storage is prohibited			
Zoning:	T4-O		**FLUM:**	UCC				
Minimum Lot Size:	n/a		**Minimum Lot Width:**		16'			
Setbacks:	**Front:**	4<x<12	**Side:**	0	**Rear:**	3		
Maximum Dwelling Units:	10 du/acre							
Maximum F.A.R.:	0.7 FAR							
Maximum Height:	3 stories							
Max Building Coverage (%):	70%							
Max Impervious Surface (%):	70%							
Parking:	1 / 500 sf floor area							
Overlay? (Y/N)	No							

Notes:
Office uses are permissible in the T4-O district; however, open storage is prohibited within the UCC land use. Office use in support of a transportation business is permissible, but if vehicles are to be stored at the site, they must be in a roofed structure. Can use a carport type structure to cover vehicles provided it is located in 2nd or 3rd layer -

Planning:
- Site plan and/or elevations?
- Architectural style and exterior materials?
- Minimum transparency requirement of 50% on first floor, 15% above
- Parking to 3rd layer (rear of site, behind building)

Access is from FDOT road and may require their approval.

Fire / Building:
- If vehicles are stored and/or serviced in the building, 2 hour separation between vehicle storage and office spaces if the building is not sprinklered
-

City of Bradenton, Florida
Department of Planning and Community Development

Want to build a metal building (40x60) to house offices for transportation business. (Medical transport business)
Currently have 5 vehicles – (Medi-Redi is the business)
Vehicles will have to be housed inside a building –
Building and Fire will have to address separation of vehicle storage and office spaces – configuration of uses needs to be worked out. Think about future needs when planning the building to minimize construction costs later.

Conceptual site plan submitted at meeting. Initial comments on that plan:

- Parking must be in 2nd or 3rd layer – move to rear of site behind building
- No shell surface for parking area. If not paved, needs to be larger aggregate stone (like 57 stone)
- Parking must be provided for office use at a rate of 1 space / 500 square feet of floor area
- ADA parking space among those provided
- Metal building is not permitted in Form Based Code area – will have to demonstrate an architectural style with appropriate exterior materials. (can be a steel structure, but requires non-metal siding)

Public Works;

- Normally, require a dumpster for commercial service – would have to request 'can' service if feel that is adequate. Provide some basis for this request (for example, current usage at Parrish location)
- Storm water permitting through the Water Management District – whether exempted or not, water from the site will have to enter a storm water system which serves the area. Site engineer will be able to determine connection location.
- FDOT will permit the driveway application
- Site Improvement Permit is required – specifications and checklist available from Public Works.

Next Steps:

1. **Form-based Code Approval/Adjustment applications**
2. **Site Improvement Permit**
3. **Building Permits**

EXHIBIT "G"
Form Based Code Administrative Review Application

RECEIVED
By COB at 10:36 am, May 12, 2020

bradenton
The Friendly City

Form-Based Code Administrative Approval Application

Department of Planning & Community Development
101 Old Main Street, Bradenton, FL 34205
Ph. (941) 932-9400
www.cityofbradenton.com

CONTACT INFORMATION (REQUIRED)

Name of Property Owner: MRT Solutions, LLC
Owner Address: 11811 Erie Rd. Telephone: 941-737-6136
Name of Agent: Niketa Jackson
Agent Address: 11811 Erie Road Telephone: 941-737-6136
Owner/Agent Email: NSjaxon@msn.com

PROPERTY INFORMATION (REQUIRED)

Property Address: 1710 Manatee Ave E., Bradenton
Parcel ID: 1270500000 Acreage: 0.2617
Zoning District: T4-O *click to view Zoning map
Future Land Use: . . *click to view FLU map
Ward #: *click to view Ward map
Neighborhood #: 7355 *click to view Neighborhoods map

DESCRIPTION (REQUIRED)

Indicate Type of Administrative Approval Request: ☐ Commercial ☒ Residential

☐ New Development ☐ Expansion ☐ Exterior Remodel

Provide a brief description of the Approval Request:

MATERIALS FOR REVIEW (REQUIRED)

Before submitting an application to the City of Bradenton, please check with the Planning & Community Development Department to verify all essential information for review is present. Incomplete applications will delay the review process.

- Application Fee: **$125.00** (Single-family and Two-family Residential).
  $300.00 (All Other)
- Notarized Agent Authorization Form
- The Preliminary Site Plan showing infor
- Letter of Request
- Four (4) copies of Site Plan to scale (se
- One (1)electronic copy in pdf format
- Current Property Survey signed & sealed within the last 3 years
- A physical and/or digital massing model of a proposed project may be required by the PCD Director to evaluate the effect of a proposed project on the surrounding area and better understand the project's characteristics.
- Additional information may be required for review, as needed

APPROVED
By Myra Schwarz at 10:09 am, May 18, 2020

APPLICATION #: FB.201754

REVIEW DATES – TO BE COMPLETED BY CITY STAFF

PC REVIEW*:
ARB REVIEW*:
DRC:
Approved:

bradenton
The Friendly City

Form-Based Code Administrative Approval Application

Department of Planning & Community Development
101 Old Main Street, Bradenton, FL 34205
Ph. (941) 932-9400
www.cityofbradenton.com

SIGNATURE REQUIRED

The owner of this property and/or the undersigned agree to conform to all applicable laws of the City of Bradenton and to all applicable Federal, State, and County laws.

Signature of Owner/Applicant — Date: 5/8/2020

CITY STAFF ONLY

Application Fees Required :
$125.00 (Single-family and Duplex Residential)
$300.00 (All Others)

FEE COLLECTED: $ 125.00
RECEIPT #: _____

Application Sufficiency:
Sufficient: ☐
Incomplete: ☐

APPLICATION #: 201754

CITY STAFF ONLY

Agent Authorization Form

Department of Planning & Community Development
101 Old Main Street, Bradenton, FL 34205
Ph: (941) 932-9400
www.cityofbradenton.com

bradenton
The Friendly City

PLANNING & ZONING AGENT AUTHORIZATION FORM

AGENT AUTHORIZATION — REQUIRED

Property Address: 1710 Manatee Ave E. Bradenton

I, Niketa Jackson, the registered property owner(s) of the above noted property, do hereby authorize

Niketa Jackson — Print Name of Agent
MRT Solutions DBA: Medi Rrd, Transport — Company Name

to act on my behalf and take all actions necessary for the processing, issuance and acceptance of this permit or certification and any and all standards and conditions applicable.

Signature of Owner(s)
11811 Erie Rd. Parrish, 34219 — Owner(s) Address (if different than property above)

Signature of Agent
11811 Erie Rd. Parrish 34219 941-737 6136 — Agent Address and Phone

STATE OF FLORIDA, MANATEE COUNTY

NOTARY — REQUIRED

The Foregoing instrument was acknowledged before me this 8 day of MAY,

produced FLDL J250637739240 respectively, as

as identification and who did (did not) take an oath:

Signature

Jennifer JAffal, Notary Public
Print Name

JENNIFER JAFFAL
Notary Public – State of Florida
Commission # GG 145517
My Comm. Expires Oct 10, 2021
Bonded through National Notary Assn.

State of Florida
My Commission Expires: Oct 10, 2021

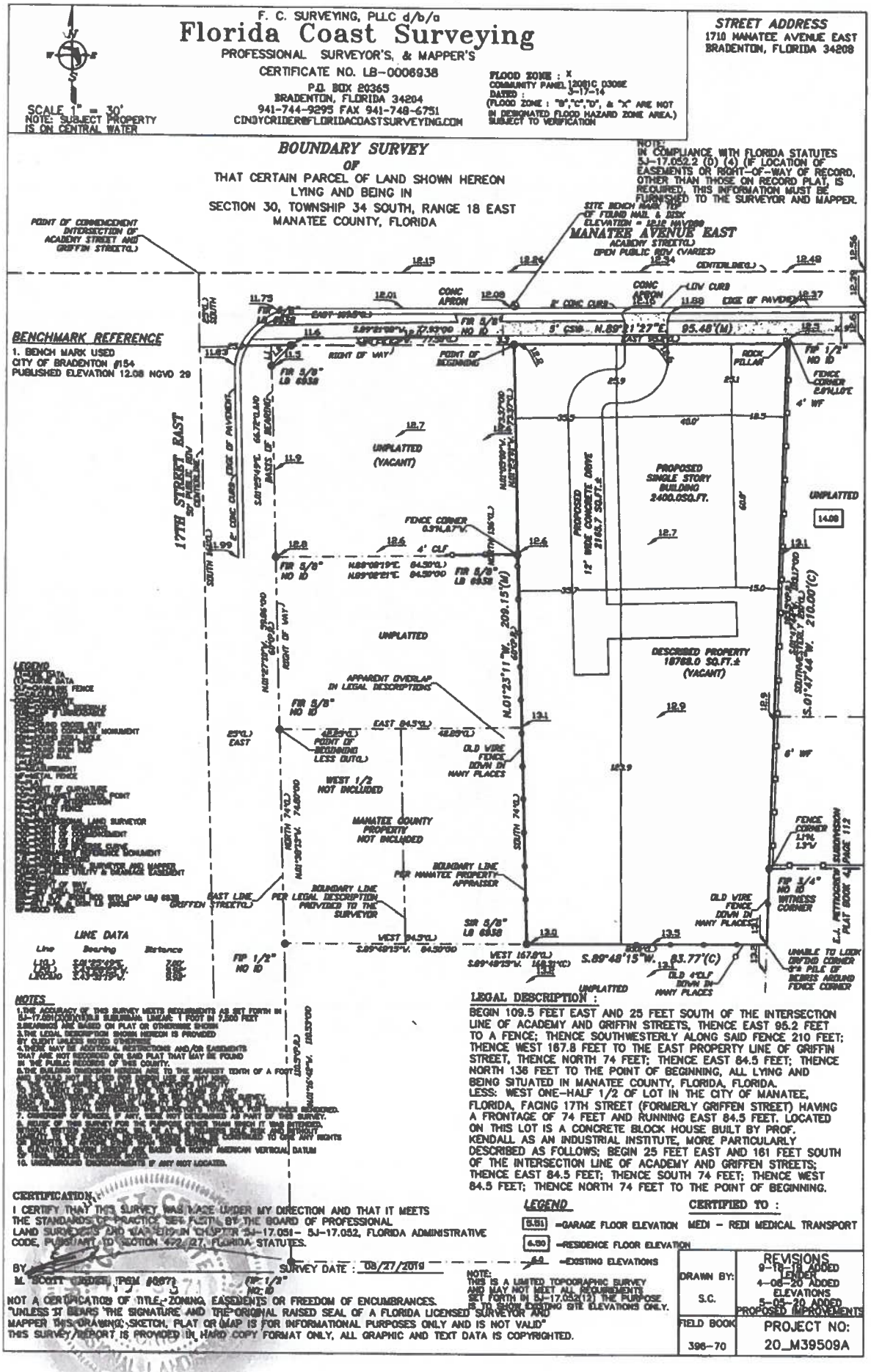

Driveway may be modified as long as parking and driveway meet FBC requirements. FDOT permit may be required. MRS

FOUNDATION DESIGN BASED ON MINIMUM OF 3000 PSF BEARING CAPACITY
GENERAL CONTRACTOR SHALL HAVE GEOTECHNICAL FIRM VERIFY PRIOR TO POURING FOOTINGS

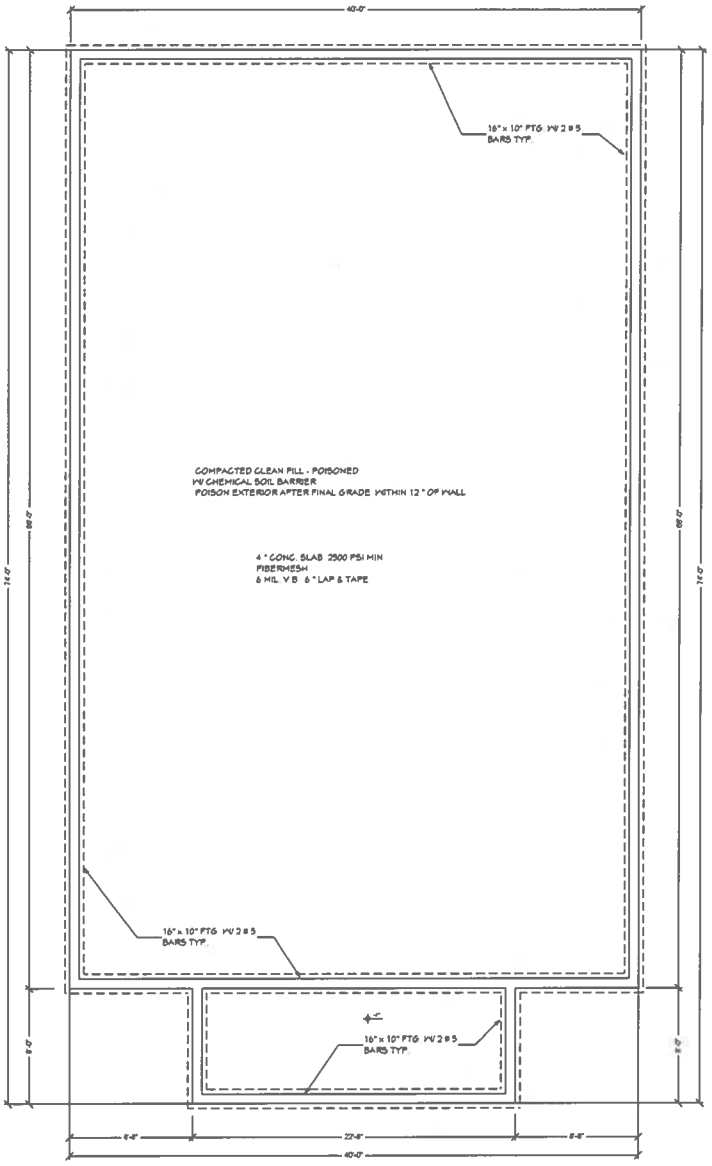

FOUNDATION PLAN SCALE 1/4" = 1'-0"

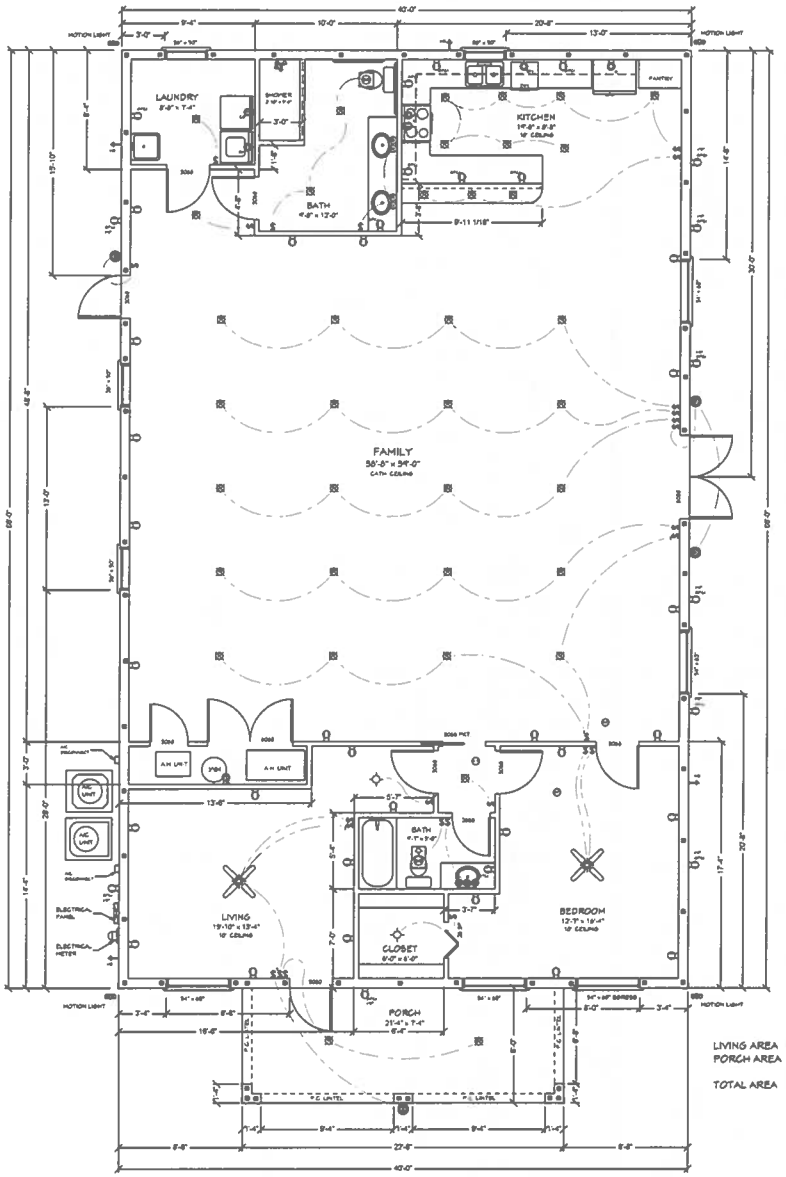

LIVING AREA 2640 SQ. FT.
PORCH AREA 182 SQ. FT.

TOTAL AREA 2822 SQ. FT.

FLOOR PLAN SCALE 1/4" = 1'-0"

DO NOT SCALE PLANS
CONTRACTOR TO VERIFY ALL DIMENSIONS AND CONDITIONS ON THE SITE PRIOR TO THE START OF CONSTRUCTION
COPYRIGHT 2019

COKER ZIMMERMANN
DRAFTING & DESIGN SERVICE
2302 4th ST W. BRADENTON, FLA.
PH 941-746-5221

BUILDING PLANS FOR:
1710 MANATEE AVENUE EAST
BRADENTON, FL

SEAL

SEPT. 2019

1
3

THE ARCHITECT OF RECORD DELEGATES THE DESIGN OF THE PRE-ENGINEERED TRUSSES TO A TRUSS DESIGN ENGINEER AND A TRUSS SYSTEM DESIGN ENGINEER. BOTH ENGINEERS MUST HAVE CURRENT FLORIDA PROFESSIONAL ENGINEERING LICENSES AND BE QUALIFIED TO PERFORM THE DELEGATED DESIGN WORK.

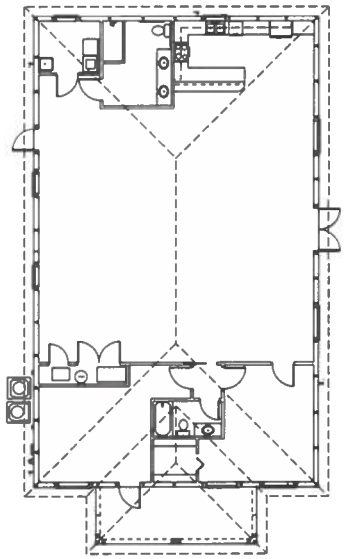

ROOF PLAN

SCALE 1/8" = 1'-0"

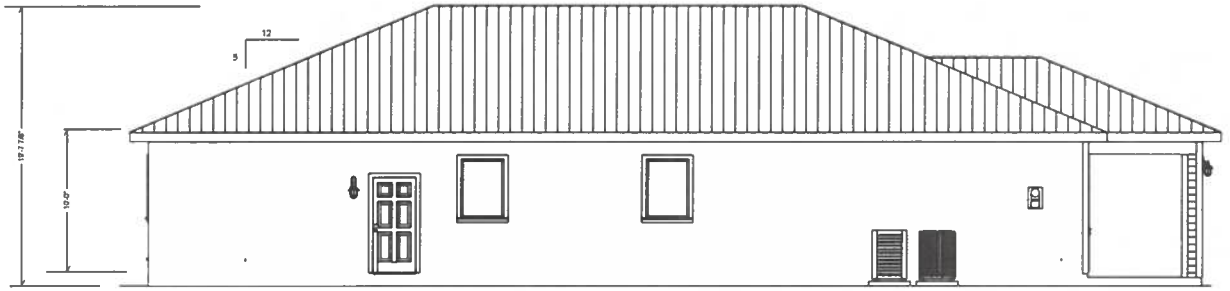

WEST ELEVATION SCALE 1/4" = 1'-0"

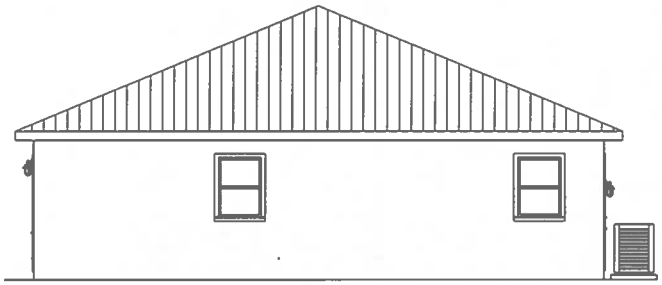

SOUTH ELEVATION SCALE 1/4" = 1'-0"

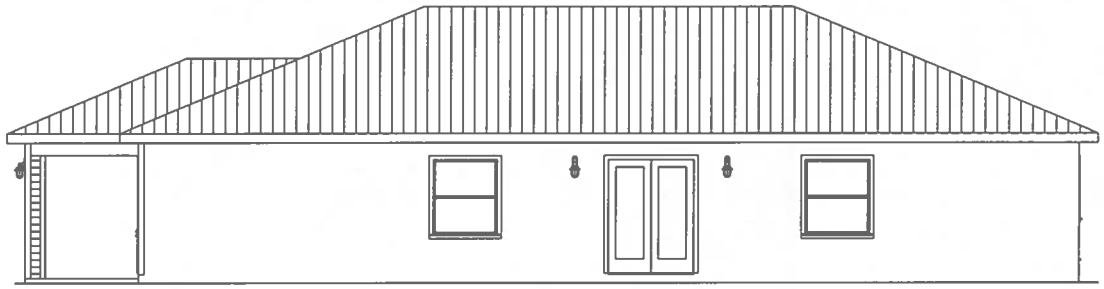

EAST ELEVATION SCALE 1/4" = 1'-0"

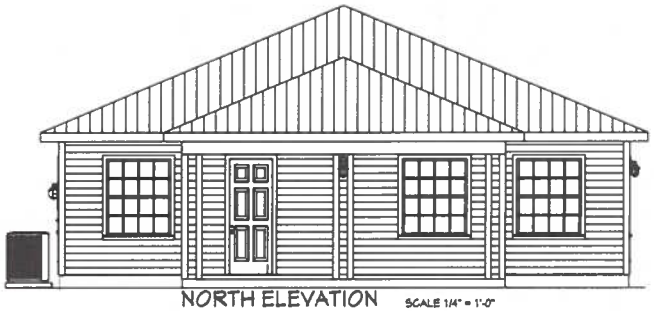

NORTH ELEVATION SCALE 1/4" = 1'-0"

DO NOT SCALE PLANS
CONTRACTOR TO VERIFY ALL DIMENSIONS AND CONDITIONS PRIOR TO THE START OF CONSTRUCTION
COPYRIGHT 2019

COKER ZIMMERMANN
DRAFTING & DESIGN SERVICE
2302 9th ST. W. BRADENTON, FLA.
PH. 941-746-5221

BUILDING PLANS FOR:
1110 MANATEE AVENUE EAST
BRADENTON, FL.

SEAL

SEPT. 2019

2
3

WOOD FRAMING NOTES:

1. WOOD CONSTRUCTION, CONNECTIONS AND NAILING REQUIREMENTS SHALL CONFORM TO THE "FLORIDA BUILDING CODE"
2. ALL WOOD FRAMING MATERIAL SHALL BE SURFACED DRY AND USED AT 19% MAXIMUM MOISTURE CONTENT
3. ALL LOAD BEARING WALL FRAMING SHALL BE NO. 2 GRADE SPF OR HEM-FIR
4. ALL JOIST AND RAFTER FRAMING SHALL BE NO. 2 GRADE, SOUTHERN PINE OR HEM-FIR
5. ALL FRAMING EXPOSED TO THE WEATHER OR IN CONTACT WITH MASONRY OR CONCRETE SHALL BE PRESSURE TREATED IN ACCORDANCE WITH THE AMERICAN WOOD PRESERVERS ASSOCIATION SPECIFICATIONS.
6. BOLT HEADS SHALL BE CAREFULLY CENTERED AND DRILLED NOT MORE THAN 1/16" LARGER THAN THE BOLT DIAMETER. BOLTED CONNECTIONS SHALL BE SNUGGED TIGHT BUT NOT TO THE EXTENT OF CRUSHING WOOD UNDER WASHERS.
7. PREFABRICATED "MICRO-LAM" LUMBER HEADERS AND BEAMS SHALL BE MANUFACTURED BY "TRUS JOIST MacMILLIAN CORP." BOISE, IDAHO OR APPROVED EQUAL. DO NOT CUT OR NOTCH MICRO-LAM MATERIAL WITHOUT THE MANUFACTURER'S APPROVAL.
8. PREFABRICATED METAL JOIST HANGERS, HURRICANE CLIPS, HOLD-DOWN ANCHORS AND OTHER ACCESSORIES SHALL BE AS MANUFACTURED BY "SIMPSON STRONG TIE COMPANY" OR EQUAL. (WS)"ALL ALL ACCESSORIES AS PER THE MANUFACTURERS REQUIREMENTS. ALL STEEL SHALL HAVE A MINIMUM THICKNESS OF 0.04 INCHES (PER ASTM A446, GRADE A) AND BE GALVANIZED (COATING G60).

ATTENTION: ALL SIMPSON CONNECTORS IN CONTACT WITH ACQ, CBA, CA-B AND NON-DOT TREATED LUMBER MUST HAVE THE FOLLOWING

SIMPSON STRONG TIE PRODUCT FINISH	FASTENERS
SHEAR BRACKETS	HOT DIPPED GALVANIZED
POST HOT DIPPED GALVANIZED SHOES	HOT DIPPED GALVANIZED
GUSSET (S) STAINLESS STEEL	316 STAINLESS STEEL

NOTE: "ACQ" TREATED LUMBER MUST HAVE ALL STAINLESS TIES AND FASTENERS
NOTE: SOUTHERN YELLOW PINE PRESSURE TREATED LUMBER CAN HAVE EITHER THE ABOVE FINISHES OR STAINLESS STEEL

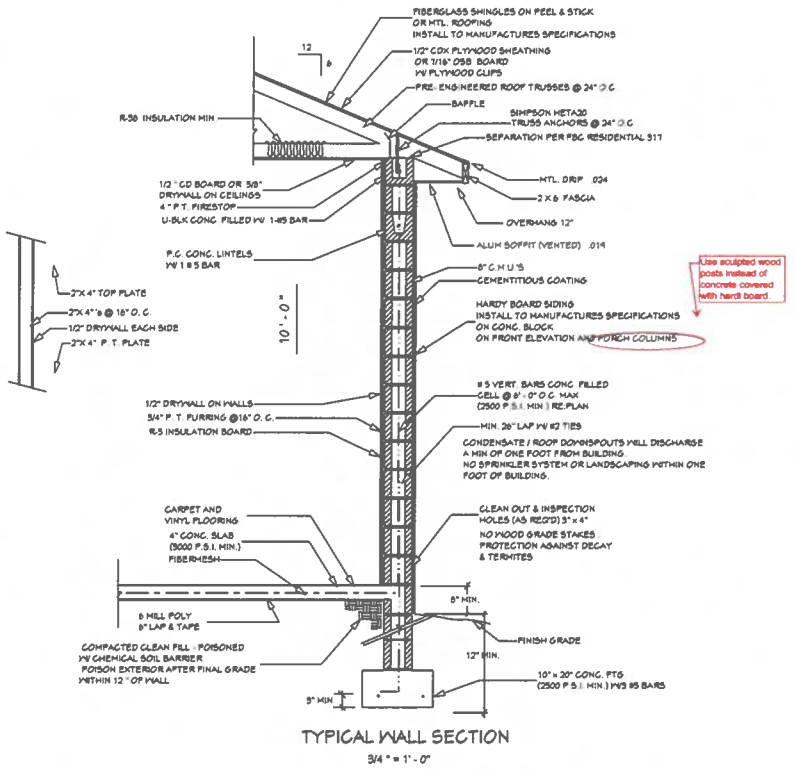

TYPICAL WALL SECTION

3/4 " = 1' - 0"

SAFE LOAD TABLE FOR CAST-CONCRETE HIGH-STRENGTH PRECAST & PRESTRESSED J LINTELS

LENGTH	SAFE LOAD - POUNDS PER LINEAR FOOT	
	UNFILLED	FILLED *
[illegible]	[illegible]	[illegible]

NOTES
1. FILLED * ACTUAL NO. OF COMPONENTS SHOWN FOR 4", 6" AND 8" CMU IS ONE IN THE LINTEL, AND #5 BAR IN KNOCKOUT GROUTED
2. FILLED PRECAST INSTALLED AS ABOVE UP TO 8 COURSES OF BLOCK MAY BE NEEDED BETWEEN THE AND PRECAST AS NEEDED

ZIMMERMANN COKER
DRAFTING & DESIGN SERVICE
2302 4th ST W. BRADENTON FLA
PH 941-746-5221

DO NOT SCALE PLANS CONTRACTOR TO VERIFY ALL DIMENSIONS AND CONDITIONS PRIOR TO THE START OF CONSTRUCTION
COPYRIGHT 2019

BUILDING PLANS FOR:
1710 MANATEE AVENUE EAST
BRADENTON, FL

SEAL:

SHEET NUMBER

SEPT. 2019

3
3

EXHIBIT "H"
Form Based Code Adjustment Application

RECEIVED
By COB at 1:20 pm, May 15, 2020

bradenton
The Friendly City

Form-Based Code Adjustment Application

Department of Planning & Community Development
101 Old Main Street, Bradenton, FL 34205
Ph: (941) 932-9400 Fax: (941) 932-9534
www.cityofbradenton.com

CONTACT INFORMATION (REQUIRED)

Name of Property Owner: MRT Solutions LLC, Niketa Jackson
Owner Address: 11811 Eric Road Telephone: 941-737-6136
Name of Agent: Niketa Jackson
Agent Address: 11811 Eric Road Telephone: 941-737-6136
Owner/Agent Email: NSjaxon@msn.com

PROPERTY INFORMATION (REQUIRED)

Property Address: 1710 manatee ave East
Parcel ID: 1270500000 Acreage: 0.2617
Zoning District: T4-O *click to view Zoning map
Future Land Use: Residence *click to view FLU map
Ward #: *click to view Ward map
Neighborhood #: 7355 *click to view Neighborhoods map

DESCRIPTION (REQUIRED)

Provide a brief description of the Adjustment request: I am requesting to set the residence back more than the maximum 12ft. due to safety concerns being off manatee ave.

MATERIALS FOR REVIEW (REQUIRED)

Before submitting an application to the City of Bradenton, please check with the Planning & Community Development Department to verify all essential information for review is present. Incomplete applications will delay the review process.

- ▶ Form-Based Code Adjustment Application
- ▶ Application Fee: $200 (Admin Approval). $460 (ARB or Planning Commission Approval, if necessary). $160 (Public Notice/Hearing Signs, if necessary). After the Fact Application and Review Fee: $350
- ▶ Agent Authorization Form, if applicable
- ▶ Letter of Request
- ▶ ▶ Four (4) copies of Site Plan / Plot Plan to scale
- ▶ ▶ Property Survey (signed & sealed within the last three years)
- ▶ One (1) electronic copy of Adjustment Application and all materials for review in PDF format
- ▶ Additional information may be required for review, as needed

SIGNATURE (REQUIRED)

The owner of this property and/or the undersigned agree to conform to all applicable laws of the City of Bradenton and to all applicable Federal, State, and County laws.

Signature of Owner/Applicant 5/12/2020 Date

CITY STAFF ONLY

Application Fees:
Fee Required: **$200** (Administrative Approval)
$460 (ARB or PC Approval, if necessary)
$160 (Public Notice/Hearing Signs, if necessary)
$350 (If After the Fact)
FEE COLLECTED: $
RECEIPT #:

Application Sufficiency:
Sufficient: ☐
Incomplete: ☐

APPLICATION #: 201814

APPROVED
By Myra Schwarz at 10:12 am, May 18, 2020

CITY STAFF ONLY

DRC: ARB REVIEW*: PC REVIEW*:
REVIEW DATES – TO BE COMPLETED BY CITY STAFF

Form-Based Code Adjustment Application

Department of Planning & Community Development
101 Old Main Street, Bradenton, FL 34205
Ph: (941) 932-9400 Fax: (941) 932-9534
www.cityofbradenton.com

PLANNING & ZONING AGENT AUTHORIZATION FORM

AGENT AUTHORIZATION — REQUIRED

Property Address: 1710 Manatee Ave. East, Bradenton 34208

I, Nikeia Jackson, the registered property owner(s) of the above noted property, do hereby authorize

Nikeia Jackson — Print Name of Agent

MRT Solutions DBA: Medi Rede Transport — Company Name

to act on my behalf and take all actions necessary for the processing, issuance and acceptance of this permit or certification and any and all standards and conditions applicable.

Nikeia Jackson
Signature of Owner(s)

Owner(s) Address (if different than property above)

Nikeia Jackson
Signature of Agent

11811 Erie Road Parrish 941-737 1136
Agent Address and Phone

NOTARY — REQUIRED

STATE OF FLORIDA, MANATEE COUNTY

The Foregoing instrument was acknowledged before me this 8 day of MAY,

produced FLDL J250637739240 respectively, as

as identification and who did (did not) take an oath:

Signature

Jennifer JAFFAL, Notary Public
Print Name

JENNIFER JAFFAL
Notary Public – State of Florida
Commission # GG 145517
My Comm. Expires Oct 10, 2021
Bonded through National Notary Assn.

State of Florida
My Commission Expires: Oct 10, 2021

EXHIBIT "I"
Building Permit for a Single-Family Residence

RECEIVED
By r_mokren at 10:02 am, Jul 22, 2020

OFFICE USE ONLY

NOTIFIED: _____ FEES DUE: $_____ AMOUNT PAID: $_____ BALANCE DUE: $_____

101 Old Main St.
Bradenton, FL 34205
Ph: 941-932-9414

CITY OF BRADENTON
Development Permit Application

permitting@cityofbradenton.com
Inspections #: 941-932-9423

Permit No: 202869	DEPARTMENT BUILDING ___ ZONING ___ FIRE ___ FLOOD ___
Related Permit #	Site Improvement Plan # / SWQ: Yes ___ No ___

- ☐ Accessory Structure Shed/Carport/Etc.
- ☐ Aluminum
- ☐ Antenna
- ☐ Commercial (Add. / Alt.)
- ☐ Commercial (New)
- ☐ Concrete
- ☐ Damage Assessment
- ☐ Demolition
- ☐ Electric and/or Low Voltage
- ☐ Mechanical and/or Gas
- ☐ Plumbing
- ☐ Exterior Door & Window
- ☐ Fence
- ☐ Mobile Home or Modular
- ☒ Residential (New)
- ☐ Residential (Add. / Alt.)
- ☐ Dumpster
- ☐ Roof
- ☐ Sign
- ☐ Shell
- ☐ Swimming (Pool – Spa) Tent
- ☐ and/or Temp Use Waterfront
- ☐ (Dock/Seawall/Etc.) Siding/
- ☐ Soffit/Fascia ☐ Other_____

COST OF CONSTRUCTION $ 175,000 PARCEL I.D. # 1270500000

JOB ADDRESS: 1710 MANATEE AVE E BRADENTON,FL 34208

PROPERTY OWNER: MRT SOLUTIONS, LLC PHONE: _____ EMAIL: _____

BUSINESS / SUBDIVISION / MH PARK: M&B LOT _____ BLOCK: _____

DESCRIPTION OF WORK: CONSTRUCT NEW SFR.

WAS THIS BUILDING DAMAGED BY FIRE, FLOOD, OR OTHER ☐YES ☐NO /DAMAGE ASSESSMENT PERMIT# _____

BUILDING: Flood Zone X New (sq.ft.) 2822 Adding (sq.ft.) _____ Renovating (sq.ft.) _____

FBC Occupancy Type: R3 FBC Construction Type: _____ Number of Stories: 1 Building Height: 19'-7 7/8"

Area per Story: 2822 Area under A/C 2640 # of Bedrooms: 1 # of Units: 1 # of Bathrooms: 2

Existing Sprinkler: ☐Yes ☐No Existing Alarm: ☐Yes ☐No FBC Threshold Building: ☐Yes ☐No

•**Subcontractor Verification Form Required** (TBD – waiting on forms)

•**Additional Work Required:** ☒Electrical ☒Mechanical ☒Plumbing ☐Gas ☐Masonry ☐Concrete ☒Roofing

ZONING: District _____ Existing Use: VACANT Proposed Use: _____ Lot Frontage: _____ Lot Area 18768

Lot Width: _____ Lot Coverage: Building% _____ Other% _____

Setbacks: Front _____ Left: _____ Right: _____ Rear: _____ Parking Spaces: _____ Accessible: _____ Site Plan: ☐Yes ☐No

Sign: Type: _____ Height _____ Width _____ Length _____ Construction _____ #of Faces _____ Area (sq.ft) _____

Number of Existing Signs _____ Illuminated: ☐Yes ☐No

PRIVATE PROVIDER: (NAME) N/A 220690

➢ **Required = First Floor Proposed Elev. Based on Ordinance 4.1.1.6 and/or Appendix "A" Floodplain Mgmt.:** _____

CONTRACTOR: RICHARD CHEAVES SR STATE CERT. /REG. # CRC1326621

AGENT/CONTACT PERSON: DEENA MARTINEAU 941-756-5388
Name Phone

PAPERCHASEPERMIT@AOL.COM
Email

DATE: 07/06/2020 Signature Sheila E West Print Name SHEILA E WEST

OFFICIAL USE ONLY:

REVIEW: BLDG _____ MECH _____ ELEC _____ PLMG _____ FIRE _____ ZONING MRS 7/23/2020 FLOOD _____ PW _____

ADDITIONAL NOTES: 202869

REV.03-16 R.MOK

PLEASE SIGN BELOW

Application is hereby made to obtain a permit to do the work and installations as indicated. I certify that no work or installations have commenced prior to the issuance of a permit and that all work will be performed in accordance with the standards of all laws and ordinances regulating construction in The City of Bradenton, Florida, whether specified herein or not. I understand that a separate permit may be required to perform electrical, plumbing, sign, well, pool, furnace, boiler, heater, air conditioning, storage tank, demolition or any other types of work as specified by The City of Bradenton. I further certify that I have read and examined this application and know the same to be correct, that all work shall be in compliance with all applicable laws regulating construction and zoning, and that the building permit may be revoked in the case of a false statement or misrepresentation in the application and/or plans on which the permit was approved.

It shall also be agreed that the owner has been advised of and understands the applicability of the Construction Lien Law (FSS 713.135) and that Impact Fees shall be determined with the application for a building permit and shall be due before Final Inspection. Permit Fees shall be payable at issuance of a building permit.

WARNING TO OWNER: YOUR FAILURE TO RECORD A NOTICE OF COMMENCEMENT MAY RESULT IN YOUR PAYING TWICE FOR IMPROVEMENTS TO YOUR PROPERTY. A NOTICE OF COMMENCEMENT MUST BE RECORDED AND POSTED ON THE JOB SITE BEFORE THE FIRST INSPECTION.

IF YOU INTEND TO OBTAIN FINANCING, CONSULT WITH YOUR LENDER OR AN ATTORNEY BEFORE COMMENCING WORK OR RECORDING YOUR NOTICE OF COMMENCEMENT.

Owner's Signature: _____ Print Name: _____

Contractor Signature: _____ Print Name: _____

Authorized Agent: Deena Martineau Print Name: Deena Martineau

Date: 07/05/2020

STATE OF FLORIDA
CITY OF BRADENTON

The foregoing instrument was acknowledged before me by means of ☑ physical presence or ☐ online notarization this 5 day of JULY, 2020, by DEENA MARTINEAU, who is ☑ personally known to me or ☐ who has produced as identification N/A

Expiration Date: _____ and who did/did not take an oath.

Notary Public Signature Sheila E. West **Notary Public Stamp Here**

Notary Public State of Florida
Sheila E West
My Commission GG 908249
Expires 10/14/2023

REV. 03-16 R.MOK

200

IMPACT FEES APPLICATION

City of Bradenton
101 12th Street West
Bradenton, FL 34205
941-932-9423

PERMIT #_____ DATE: 7-6-2020

OWNER: Niketa Jackson CONTRACTOR: Richard Cheaves Sr.

ADDRESS OF JOB: 1710 Manatee Avenue East

UNIT VALUE	FIXTURE TYPE	APPLICATION # Fixtures	APPLICATION Total	FIELD VERIFICATION # Fixtures	FIELD VERIFICATION Total
6	1 Bathroom Group (tank operated w.c. lav tub or shower	2	12		
3	Water closet, flushometer tank, public or private				
4	Water closet, private installation				
6	Water closet, public installation				
2	Bidet				
3	Combination sink and tray				
4	Combination sink & tray with food disposal unit				
1	Dental unit or cuspidor				
1	Dental Lavatory				
1/2	Drinking Fountain				
2	Dishwashing machine domestic	1	2		
1	Floor Drains (multiply by sewer charge only)				
2	Kitchen Sink domestic				
3	Kitchen Sink, domestic with food waste grinder	1	3		
1	Lavatory (1 & 1/4" Drain)				
2	Lavatory (1 & 1/2" Drain)				
2	Lavatory - barber, beauty parlor, bar sink, hand sink				
2	Lavatory - surgeon's, exam sink				
2	Laundry tray (1 or 2 compartments)				
2	Shower stall, domestic				
3	Showers (group) per head				
3	Sinks - surgeon's				
8	Flushing rim (with valve)				
3	Service (trap standard) (Indirect Waste)				
2	Service (P trap) self contained or remote to indirect				
4	Pot, scullery, etc.				
8	Urinal, pedestal, syphon jet, blowout				
4	Urinal, wall lip				
4	Urinal stall, washout				
2	Bathtub				
3	Washing Machine (residedntial)	1	3		
2	Wash sink (circular or multiple) each set of faucets	1	2		
5	Commercial washing machine				
	TOTALS:	6	22		

WATER TOTAL UNITS 22 X $62.24 = $ 1,369.28

SEWER TOTAL UNITS 22 X $81.34 = $ 1,789.48

TOTAL FEE = $ 3,158.76

SIGNATURE OF APPLICANT: _____ DATE: 7/15/2020

APPROVED BY: _____ DATE: _____

VERIFIED BY: _____ DATE: _____

202869

WHETSTONE ENGINEERING & TESTING, INC.

2000 PSF DESIGN CAPACITY FIELD REPORT

Depth	Soil Classification	Soil Density Characteristics	Soil Coloration
0' to 1'	SP	Compact (Satisfactory)	Grey
1' to 2'	SP	Compact (Satisfactory)	Brown
2' to 3'	SP	Compact (Satisfactory)	Light Brown
3' to 4'	SP	Compact (Satisfactory)	Light Brown

SP=sandy soil, poorly graded, fairly clean
SW=sandy soil, well-graded, fairly clean
SM=sandy soil, coarse materials with fines
SC=sandy soil, well-graded, with excellent binder

Were any organic soils encountered?	No	Were any soil anomalies encountered?	No
Was any buried debris encountered?	No	Were any other concerns encountered?	No

Based on the visible soil conditions investigated at this location, it is the professional opinion of Whetstone Engineering and Testing, Inc. that the soils uncovered and reviewed at this specific sample location are consistent with those listed in the current version of the FBC, under the presumptive load-bearing categories capable of achieving 2,000 psf when properly prepared at the time of construction. Contractor/Owner are advised that this limited investigation may not uncover unsuitable soil conditions that exist at other locations in the structure or at the testing location to allow engineering to evaluate the general soil suitability and draw a general conclusion based on presumptive capacities provided by the current version of the FBC. No other warranty is expressed or implied. Due to Florida's sandy soil profile, differential settlements up to 1/2" per 20' in length could be expected upon completion of a fully loaded structure. These settlements will invariably occur on all structures on this type of soil.

Cheaves Masonry

1710 Manatee Avenue East

Field Technician

06/24/2020

CRYSTAL R. WEAVER LICENSE No 82168 STATE OF FLORIDA PROFESSIONAL ENGINEER

WHETSTONE ENGINEERING & TESTING, INC.
2004 53rd Avenue East
Bradenton, FL 34203
Certificate of Authorization #9298

EW

Digitally signed by Crystal R. Weaver
DN: c=US, st=Florida, l=Bradenton, o=Whetstone Engineering & Testing, Inc., cn=Crystal R. Weaver, email=Crystal@WhetstoneEng.com
Reason: I am approving this document
Date: 2020.06.24 10:40:09 -04'00'

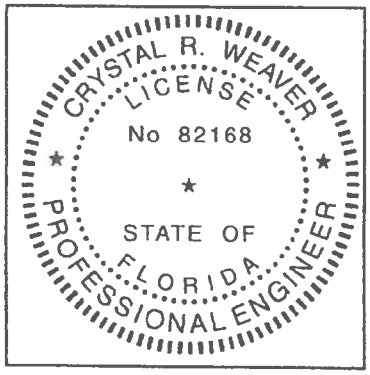

2004 53rd Ave. E., Bradenton, FL 34203
Office Phone : (941) 727-1138
Certificate of Authorization #9298

202869

This item has been electronically signed and sealed using a digital signature. Printed copies of this document are not considered signed and sealed and the signature must be verified on any electronic copies.

FORM R405-2017

FLORIDA ENERGY EFFICIENCY CODE FOR BUILDING CONSTRUCTION

Florida Department of Business and Professional Regulation - Residential Performance Method

Project Name:	1710 Manatee Ave E	Builder Name:	Cheaves
Street:	1710 Manatee Ave E	Permit Office:	Bradenton
City, State, Zip:	Bradenton , FL , 34205	Permit Number:	
Owner:		Jurisdiction:	511200
Design Location:	FL, Sarasota	County:	Manatee (Florida Climate Zone 2)

1. New construction or existing	New (From Plans)
2. Single family or multiple family	Single-family
3. Number of units, if multiple family	1
4. Number of Bedrooms	1
5. Is this a worst case?	No
6. Conditioned floor area above grade (ft²)	2640
Conditioned floor area below grade (ft²)	0

7. Windows(192.1 sqft.)	Description	Area
a. U-Factor:	Sgl, U=0.32	192.13 ft²
SHGC:	SHGC=0.21	
b. U-Factor:	N/A	ft²
SHGC:		
c. U-Factor:	N/A	ft²
SHGC:		
d. U-Factor:	N/A	ft²
SHGC:		
Area Weighted Average Overhang Depth:		0.000 ft.
Area Weighted Average SHGC:		0.210

8. Floor Types (2640.0 sqft.)	Insulation	Area
a. Slab-On-Grade Edge Insulation	R=0.0	2640.00 ft²
b. N/A	R=	ft²
c. N/A	R=	ft²

9. Wall Types (2480.0 sqft.)	Insulation	Area
a. Concrete Block - Int Insul, Exterior	R=4.1	2080.00 ft²
b. Interior Frame - Wood, Interior	R=0.0	400.00 ft²
c. N/A	R=	ft²
d. N/A	R=	ft²

10. Ceiling Types (2640.0 sqft.)	Insulation	Area
a. Under Attic (Vented)	R=38.0	2640.00 ft²
b. N/A	R=	ft²
c. N/A	R=	ft²

11. Ducts	R	ft²
a. Sup: Attic, Ret: Main, AH: Bedroom	6	264
b. Sup: Attic, Ret: Attic, AH: Bedroom	6	264

12. Cooling systems	kBtu/hr	Efficiency
a. Central Unit	30.0	SEER:16.00
b. Central Unit	24.0	SEER:16.00

13. Heating systems	kBtu/hr	Efficiency
a. Electric Heat Pump	30.0	HSPF:8.20
b. Electric Heat Pump	24.0	HSPF:8.20

14. Hot water systems	
a. Electric	Cap: 40 gallons EF: 0.950
b. Conservation features	
None	
15. Credits	CF, Pstat

Glass/Floor Area: 0.073

Total Proposed Modified Loads: 71.91

Total Baseline Loads: 74.05

PASS

I hereby certify that the plans and specifications covered by this calculation are in compliance with the Florida Energy Code.

PREPARED BY: _____

DATE: 6/25/2020

I hereby certify that this building, as designed, is in compliance with the Florida Energy Code.

OWNER/AGENT: Deena Martineau

DATE: 07/02/20

Review of the plans and specifications covered by this calculation indicates compliance with the Florida Energy Code. Before construction is completed this building will be inspected for compliance with Section 553.908 Florida Statutes.

BUILDING OFFICIAL: _____

DATE: _____

- Compliance requires certification by the air handler unit manufacturer that the air handler enclosure qualifies as certified factory-sealed in accordance with R403.3.2.1.

- Compliance requires an Air Barrier and Insulation Inspection Checklist in accordance with R402.4.1.1 and this project requires an envelope leakage test report with envelope leakage no greater than 7.00 ACH50 (R402.4.1.2).

202869

FORM R405-2017

INPUT SUMMARY CHECKLIST REPORT

PROJECT

Title:	1710 Manatee Ave E	Bedrooms:	1	Address Type:	Street Address
Building Type:	User	Conditioned Area:	2640	Lot #	
Owner Name:		Total Stories:	1	Block/Subdivision:	
# of Units:	1	Worst Case:	No	PlatBook:	
Builder Name:	Cheaves	Rotate Angle:	0	Street:	1710 Manatee Ave E
Permit Office:	Bradenton	Cross Ventilation:		County:	Manatee
Jurisdiction:	511200	Whole House Fan:		City, State, Zip:	Bradenton , FL , 34205
Family Type:	Single-family				
New/Existing:	New (From Plans)				
Comment:					

CLIMATE

√	Design Location	TMY Site	Design Temp 97.5 %	Design Temp 2.5 %	Int Design Temp Winter	Int Design Temp Summer	Heating Degree Days	Design Moisture	Daily Temp Range
_____	FL, Sarasota	FL_SARASOTA_BRADE	39	90	70	75	604	52	Medium

BLOCKS

Number	Name	Area	Volume
1	Block1	1947	19470
2	Block2	693	6930

SPACES

Number	Name	Area	Volume	Kitchen	Occupants	Bedrooms	Infil ID	Finished	Cooled	Heated
1	Main	1947	19470	Yes	40		1	Yes	Yes	Yes
2	Bedroom	693	6930	No	6	1	1	Yes	Yes	Yes

FLOORS

√	#	Floor Type	Space	Perimeter	Perimeter R-Value	Area	Joist R-Value	Tile	Wood	Carpet
_____	1	Slab-On-Grade Edge Insulatio	Main	137 ft	0	1947 ft²	----	0	0	1
_____	2	Slab-On-Grade Edge Insulatio	Bedroom	74 ft	0	693 ft²	----	0	0	1

ROOF

√	#	Type	Materials	Roof Area	Gable Area	Roof Color	Rad Barr	Solar Absor.	SA Tested	Emitt	Emitt Tested	Deck Insul.	Pitch (deg)
_____	1	Hip	Metal	2860 ft²	0 ft²	Unfinishe	N	0.7	No	0.7	No	0	22.6

ATTIC

√	#	Type	Ventilation	Vent Ratio (1 in)	Area	RBS	IRCC
_____	1	Partial cathedral cei	Vented	300	2640 ft²	N	N

202869

FORM R405-2017

INPUT SUMMARY CHECKLIST REPORT

CEILING

√	#	Ceiling Type	Space	R-Value	Ins Type	Area	Framing Frac	Truss Type
	1	Under Attic (Vented)	Bedroom	38	Blown	693 ft²	0.11	Wood
	2	Under Attic (Vented)	Main	38	Blown	1947 ft²	0.11	Wood

WALLS

√	#	Ornt	Adjacent To	Wall Type	Space	Cavity R-Value	Width Ft	Width In	Height Ft	Height In	Area	Sheathing R-Value	Framing Fraction	Solar Absor.	Below Grade%
	1	N	Exterior	Concrete Block - Int Insul	Bedroom	4.0999	40	0	10	0	400.0 ft²		0	0.55	0
	2	E	Exterior	Concrete Block - Int Insul	Bedroom	4.0999	17	4	10	0	173.3 ft²		0	0.55	0
	3	E	Exterior	Concrete Block - Int Insul	Main	4.0999	44	8	10	0	446.7 ft²		0	0.55	0
	4	S	Exterior	Concrete Block - Int Insul	Main	4.0999	40	0	10	0	400.0 ft²		0	0.55	0
	5	W	Exterior	Concrete Block - Int Insul	Main	4.0999	48	8	10	0	486.7 ft²		0	0.55	0
	6	W	Exterior	Concrete Block - Int Insul	Bedroom	4.0999	17	4	10	0	173.3 ft²		0	0.55	0
	7	N	Main	Interior Frame - Wood	Bedroom	0	40	0	10	0	400.0 ft²		0	0.75	0

DOORS

√	#	Ornt	Door Type	Space	Storms	U-Value	Width Ft	Width In	Height Ft	Height In	Area
	1	N	Wood	Bedroom	None	.46	3		8		24 ft²
	2	E	Wood	Main	None	.46	3		8		24 ft²
	3	W	Wood	Main	None	.46	3		8		24 ft²

WINDOWS

Orientation shown is the entered, Proposed orientation.

√	#	Ornt	Wall ID	Frame	Panes	NFRC	U-Factor	SHGC	Imp	Area	Overhang Depth	Overhang Separation	Int Shade	Screening
	1	N	1	Vinyl	Low-E Single	Yes	0.32	0.21	N	70.9 ft²	0 ft 0 in	0 ft 0 in	Drapes/blinds	None
	2	E	3	Vinyl	Low-E Single	Yes	0.32	0.21	N	25.0 ft²	0 ft 0 in	0 ft 0 in	Drapes/blinds	None
	3	S	4	Vinyl	Low-E Single	Yes	0.32	0.21	N	25.0 ft²	0 ft 0 in	0 ft 0 in	Drapes/blinds	None
	4	W	5	Vinyl	Low-E Single	Yes	0.32	0.21	N	47.3 ft²	0 ft 0 in	0 ft 0 in	Drapes/blinds	None
	5	W	5	Vinyl	Low-E Single	Yes	0.32	0.21	N	24.0 ft²	0 ft 0 in	0 ft 0 in	Drapes/blinds	None

INFILTRATION

#	Scope	Method	SLA	CFM 50	ELA	EqLA	ACH	ACH 50
1	Wholehouse	Proposed ACH(50)	.000445	3080	169.09	317.99	.183	7

HEATING SYSTEM

√	#	System Type	Subtype	Speed	Efficiency	Capacity	Block	Ducts
	1	Electric Heat Pump/	None	Singl	HSPF:8.2	30 kBtu/hr	1	sys#1
	2	Electric Heat Pump/	None	Singl	HSPF:8.2	24 kBtu/hr	2	sys#2

202869

FORM R405-2017

INPUT SUMMARY CHECKLIST REPORT

COOLING SYSTEM

√	#	System Type	Subtype	Subtype	Efficiency	Capacity	Air Flow	SHR	Block	Ducts
_____	1	Central Unit/	None	Singl	SEER: 16	30 kBtu/hr	900 cfm	0.75	1	sys#1
_____	2	Central Unit/	None	Singl	SEER: 16	24 kBtu/hr	720 cfm	0.75	2	sys#2

HOT WATER SYSTEM

√	#	System Type	SubType	Location	EF	Cap	Use	SetPnt	Conservation
_____	1	Electric	None	Bedroom	0.95	40 gal	40 gal	120 deg	None

SOLAR HOT WATER SYSTEM

√	FSEC Cert #	Company Name	System Model #	Collector Model #	Collector Area	Storage Volume	FEF
_____	None	None			ft²		

DUCTS

√	#	---- Supply ---- Location	R-Value	Area	---- Return ---- Location	Area	Leakage Type	Air Handler	CFM 25 TOT	CFM25 OUT	QN	RLF	HVAC # Heat	HVAC # Cool
_____	1	Attic	6	264 ft²	Main	66 ft²	Default Leakage	Bedroom	(Default)	(Default)			1	1
_____	2	Attic	6	264 ft²	Attic	66 ft²	Default Leakage	Bedroom	(Default)	(Default)			2	2

TEMPERATURES

Programable Thermostat: Y

Ceiling Fans:

	Jan	Feb	Mar	Apr	May	Jun	Jul	Aug	Sep	Oct	Nov	Dec
Cooling	[ ]	[ ]	[ ]	[ ]	[ ]	[X]	[X]	[X]	[X]	[ ]	[ ]	[ ]
Heating	[X]	[X]	[X]	[ ]	[ ]	[ ]	[ ]	[ ]	[ ]	[ ]	[X]	[X]
Venting	[ ]	[ ]	[X]	[X]	[ ]	[ ]	[ ]	[ ]	[ ]	[X]	[X]	[ ]

Thermostat Schedule: HERS 2006 Reference

Schedule Type		Hours 1	2	3	4	5	6	7	8	9	10	11	12
Cooling (WD)	AM	78	78	78	78	78	78	78	78	80	80	80	80
	PM	80	80	78	78	78	78	78	78	78	78	78	78
Cooling (WEH)	AM	78	78	78	78	78	78	78	78	78	78	78	78
	PM	78	78	78	78	78	78	78	78	78	78	78	78
Heating (WD)	AM	66	66	66	66	66	68	68	68	68	68	68	68
	PM	68	68	68	68	68	68	68	68	68	68	66	66
Heating (WEH)	AM	66	66	66	66	66	68	68	68	68	68	68	68
	PM	68	68	68	68	68	68	68	68	68	68	66	66

MASS

Mass Type	Area	Thickness	Furniture Fraction	Space
Default(8 lbs/sq.ft.	0 ft²	0 ft	0.3	Main
Default(8 lbs/sq.ft.	0 ft²	0 ft	0.3	Bedroom

202869

ENERGY PERFORMANCE LEVEL (EPL) DISPLAY CARD

ESTIMATED ENERGY PERFORMANCE INDEX* = 97

The lower the Energy Performance Index, the more efficient the home.

1. New home or, addition	1. New (From Plans)
2. Single-family or multiple-family	2. Single-family
3. No. of units (if multiple-family)	3. 1
4. Number of bedrooms	4. 1
5. Is this a worst case? (yes/no)	5. No
6. Conditioned floor area (sq. ft.)	6. 2640
7. Windows, type and area	
a) U-factor:(weighted average)	7a. 0.320
b) Solar Heat Gain Coefficient (SHGC)	7b. 0.210
c) Area	7c. 192.1
8. Skylights	
a) U-factor:(weighted average)	8a. NA
b) Solar Heat Gain Coefficient (SHGC)	8b. NA
9. Floor type, insulation level:	
a) Slab-on-grade (R-value)	9a. 0.0
b) Wood, raised (R-value)	9b.
c) Concrete, raised (R-value)	9c.
10. Wall type and insulation:	
A. Exterior:	
1. Wood frame (Insulation R-value)	10A1.
2. Masonry (Insulation R-value)	10A2. 4.1
B. Adjacent:	
1. Wood frame (Insulation R-value)	10B1.
2. Masonry (Insulation R-value)	10B2.
11. Ceiling type and insulation level	
a) Under attic	11a. 38.0
b) Single assembly	11b.
c) Knee walls/skylight walls	11c.
d) Radiant barrier installed	11d. No

12. Ducts, location & insulation level	
a) Supply ducts	R 6.0
b) Return ducts	R 6.0
c) AHU location	Bedroom
13. Cooling system:	Capacity 54.0
a) Split system	SEER
b) Single package	SEER
c) Ground/water source	SEER/COP
d) Room unit/PTAC	EER
e) Other	16.0
14. Heating system:	Capacity 54.0
a) Split system heat pump	HSPF
b) Single package heat pump	HSPF
c) Electric resistance	COP
d) Gas furnace, natural gas	AFUE
e) Gas furnace, LPG	AFUE
f) Other	8.20
15. Water heating system	
a) Electric resistance	EF 0.95
b) Gas fired, natural gas	EF
c) Gas fired, LPG	EF
d) Solar system with tank	EF
e) Dedicated heat pump with tank	EF
f) Heat recovery unit	HeatRec%
g) Other	
16. HVAC credits claimed (Performance Method)	
a) Ceiling fans	Yes
b) Cross ventilation	No
c) Whole house fan	No
d) Multizone cooling credit	
e) Multizone heating credit	
f) Programmable thermostat	Yes

*Label required by Section R303.1.3 of the Florida Building Code, Energy Conservation, if not DEFAULT.

I certify that this home has complied with the Florida Building Code, Energy Conservation, through the above energy saving features which will be installed (or exceeded) in this home before final inspection. Otherwise, a new EPL display card will be completed based on installed code compliant features.

Builder Signature: DEENA MARTINEAU Date: 07/02/20

Address of New Home: 1710 Manatee Ave E City/FL Zip: Bradenton, FL 34205

202869

Residential System Sizing Calculation

Summary

1710 Manatee Ave E
Bradenton, FL

Project Title:
1710 Manatee Ave E

6/25/2020

Location for weather data: Sarasota, FL - Defaults: Latitude(27.38) Altitude(26 ft.) Temp Range(M)					
Humidity data: Interior RH (50%) Outdoor wet bulb (77F) Humidity difference(52gr.)					
Winter design temperature(TMY3 99%)	37	F	Summer design temperature(TMY3 99%)	91	F
Winter setpoint	70	F	Summer setpoint	75	F
Winter temperature difference	33	F	Summer temperature difference	16	F
Total heating load calculation	**32954**	**Btuh**	**Total cooling load calculation**	**49562**	**Btuh**
Submitted heating capacity	% of calc	Btuh	Submitted cooling capacity	% of calc	Btuh
Total (Electric Heat Pump)	163.9	54000	Sensible (SHR = 0.75)	118.4	40500
Heat Pump + Auxiliary(0.0kW)	163.9	54000	Latent	87.9	13500
			Total (Electric Heat Pump)	109.0	54000

WINTER CALCULATIONS

Winter Heating Load (for 2640 sqft)

Load component			Load	
Window total	192	sqft	2092	Btuh
Wall total	2216	sqft	8943	Btuh
Door total	72	sqft	1093	Btuh
Ceiling total	2640	sqft	2211	Btuh
Floor total	See detail report		8216	Btuh
Infiltration	129	cfm	4672	Btuh
Duct loss			5726	Btuh
Subtotal			**32954**	**Btuh**
Ventilation	0	cfm	0	Btuh
TOTAL HEAT LOSS			**32954**	**Btuh**

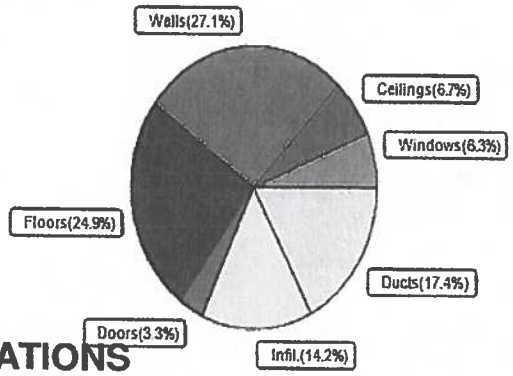

SUMMER CALCULATIONS

Summer Cooling Load (for 2640 sqft)

Load component			Load	
Window total	192	sqft	2871	Btuh
Wall total	2216	sqft	3252	Btuh
Door total	72	sqft	894	Btuh
Ceiling total	2640	sqft	2747	Btuh
Floor total			0	Btuh
Infiltration	97	cfm	1699	Btuh
Internal gain			16580	Btuh
Duct gain			6157	Btuh
Sens. Ventilation	0	cfm	0	Btuh
Blower Load			0	Btuh
Total sensible gain			**34200**	**Btuh**
Latent gain(ducts)			1549	Btuh
Latent gain(infiltration)			3413	Btuh
Latent gain(ventilation)			0	Btuh
Latent gain(internal/occupants/other)			10400	Btuh
Total latent gain			**15362**	**Btuh**
TOTAL HEAT GAIN			**49562**	**Btuh**

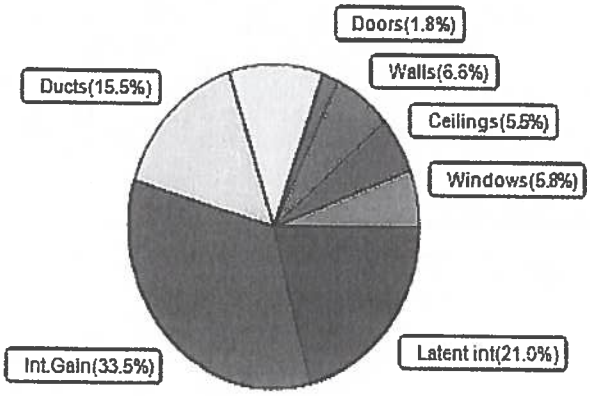

8th Edition

EnergyGauge® System Sizing
PREPARED BY:
DATE: 6/25/2020

202869

System Sizing Calculations - Summer

Residential Load - Whole House Component Details

1710 Manatee Ave E
Bradenton, FL

Project Title:
1710 Manatee Ave E

6/25/2020

Reference City: Sarasota, FL Temperature Difference: 16.0F(TMY3 99%) Humidity difference: 52gr.

Component Loads for Whole House

Window	Type* Panes	SHGC	U	InSh	IS	Ornt	Overhang Len	Hgt	Window Area(sqft) Gross	Shaded	Unshaded	HTM Shaded	Unshaded	Load
1	1 NFRC	0.21, 0.33	B-L	No	N		1.3ft	1.0ft	70.9	0.0	70.9	7	7	519 Btuh
2	1 NFRC	0.21, 0.33	B-L	No	E		1.3ft	1.0ft	25.0	0.6	24.4	7	18	448 Btuh
3	1 NFRC	0.21, 0.33	B-L	No	S		1.3ft	1.0ft	25.0	25.0	0.0	7	8	183 Btuh
4	1 NFRC	0.21, 0.33	B-L	No	W		1.3ft	1.0ft	47.3	1.0	46.3	7	18	849 Btuh
5	1 NFRC	0.21, 0.33	B-L	No	W		1.3ft	1.0ft	24.0	0.3	23.7	7	18	433 Btuh
	Excursion													439 Btuh
	Window Total								192 (sqft)					2871 Btuh

Walls	Type	U-Value	R-Value Cav/Sheath	Area(sqft)	HTM	Load
1	Concrete Blk,Hollow - Ext	0.15	4.1/0.0	305.1	1.8	546 Btuh
2	Concrete Blk,Hollow - Ext	0.15	4.1/0.0	173.3	1.8	310 Btuh
3	Concrete Blk,Hollow - Ext	0.15	4.1/0.0	397.7	1.8	712 Btuh
4	Concrete Blk,Hollow - Ext	0.15	4.1/0.0	375.0	1.8	672 Btuh
5	Concrete Blk,Hollow - Ext	0.15	4.1/0.0	391.4	1.8	701 Btuh
6	Concrete Blk,Hollow - Ext	0.15	4.1/0.0	173.3	1.8	310 Btuh
7	Frame - Wood - Int	0.24	0.0/0.0	400.0	0.0	0 Btuh
	Wall Total			2216 (sqft)		3252 Btuh

Doors	Type	Area (sqft)	HTM	Load
1	Wood - Exterior	24.0	12.4	298 Btuh
2	Wood - Exterior	24.0	12.4	298 Btuh
3	Wood - Exterior	24.0	12.4	298 Btuh
	Door Total	72 (sqft)		894 Btuh

Ceilings	Type/Color/Surface	U-Value	R-Value	Area(sqft)	HTM	Load
1	Vented Attic/Light/Metal	0.025	38.0/0.0	693.0	1.04	721 Btuh
2	Vented Attic/Light/Metal	0.025	38.0/0.0	1947.0	1.04	2026 Btuh
	Ceiling Total			2640 (sqft)		2747 Btuh

Floors	Type	R-Value	Size	HTM	Load
1	Slab On Grade	0.0	1947 (ft-perimeter)	0.0	0 Btuh
2	Slab On Grade	0.0	693 (ft-perimeter)	0.0	0 Btuh
	Floor Total		2640.0 (sqft)		0 Btuh
			Envelope Subtotal:		9764 Btuh

Infiltration	Type	Average ACH	Volume(cuft)	Wall Ratio	CFM=	Load
	Natural	0.22	26400	1	96.6	1699 Btuh
Internal gain		Occupants	Btuh/occupant		Appliance	Load
		46	X 230	+	6000	16580 Btuh
				Sensible Envelope Load:		28043 Btuh
Duct load			(DGMs vary for Mixed ducts)			6157 Btuh
				Sensible Load All Zones		**34200 Btuh**

202869

Manual J Summer Calculations

Residential Load - Component Details (continued)

Project Title: Climate:FL_SARASOTA_BRADENTON

1710 Manatee Ave E
Bradenton, FL

1710 Manatee Ave E

6/25/2020

WHOLE HOUSE TOTALS

	Sensible Envelope Load All Zones	**28043 Btuh**
	Sensible Duct Load	6157 Btuh
	Total Sensible Zone Loads	**34200 Btuh**
	Sensible ventilation	0 Btuh
	Blower	0 Btuh
Whole House	**Total sensible gain**	**34200 Btuh**
Totals for Cooling	Latent infiltration gain (for 52 gr. humidity difference)	3413 Btuh
	Latent ventilation gain	0 Btuh
	Latent duct gain	1549 Btuh
	Latent occupant gain (46.0 people @ 200 Btuh per person)	9200 Btuh
	Latent other gain	1200 Btuh
	Latent total gain	**15362 Btuh**
	TOTAL GAIN	**49562 Btuh**

EQUIPMENT

1. Central Unit	#	30000 Btuh
2. Central Unit	#	24000 Btuh

*Key: Window types (Panes - Number and type of panes of glass)
(SHGC - Shading coefficient of glass as SHGC numerical value)
(U - Window U-Factor)
(InSh - Interior shading device: none(No), Blinds(B), Draperies(D) or Roller Shades(R))
- For Blinds: Assume medium color, half closed
For Draperies: Assume medium weave, half closed
For Roller shades: Assume translucent, half closed
(IS - Insect screen: none(N), Full(F) or Half(½))
(Ornt - compass orientation)

Version 8

202869

System Sizing Calculations - Winter

Residential Load - Whole House Component Details

1710 Manatee Ave E
Bradenton, FL

Project Title:
1710 Manatee Ave E
Building Type: User

6/25/2020

Reference City: Sarasota, FL (Defaults) Winter Temperature Difference: 33.0 F (TMY3 99%)

Component Loads for Whole House

Window	Panes/Type	Frame	U	Orientation	Area(sqft) X	HTM=	Load
1	1, NFRC 0.21	Vinyl	0.33	N	70.9	10.9	772 Btuh
2	1, NFRC 0.21	Vinyl	0.33	E	25.0	10.9	272 Btuh
3	1, NFRC 0.21	Vinyl	0.33	S	25.0	10.9	272 Btuh
4	1, NFRC 0.21	Vinyl	0.33	W	47.3	10.9	515 Btuh
5	1, NFRC 0.21	Vinyl	0.33	W	24.0	10.9	261 Btuh
	Window Total				192.1(sqft)		2092 Btuh

Walls	Type	Ornt.	Ueff.	R-Value (Cav/Sh)	Area X	HTM=	Load
1	Conc Blk,Hollow	- Ext	(0.149)	4.1/0.0	305	4.92	1503 Btuh
2	Conc Blk,Hollow	- Ext	(0.149)	4.1/0.0	173	4.92	854 Btuh
3	Conc Blk,Hollow	- Ext	(0.149)	4.1/0.0	398	4.92	1958 Btuh
4	Conc Blk,Hollow	- Ext	(0.149)	4.1/0.0	375	4.92	1847 Btuh
5	Conc Blk,Hollow	- Ext	(0.149)	4.1/0.0	391	4.92	1928 Btuh
6	Conc Blk,Hollow	- Ext	(0.149)	4.1/0.0	173	4.92	854 Btuh
7	Frame - Wood	- Int	(0.240)	0.0/0.0	400	0.00	0 Btuh
	Wall Total				2216(sqft)		8943 Btuh

Doors	Type	Storm	Ueff.		Area X	HTM=	Load
1	Wood - Exterior,	n	(0.460)		24	15.2	364 Btuh
2	Wood - Exterior,	n	(0.460)		24	15.2	364 Btuh
3	Wood - Exterior,	n	(0.460)		24	15.2	364 Btuh
	Door Total				72(sqft)		1093Btuh

Ceilings	Type/Color/Surface	Ueff.	R-Value	Area X	HTM=	Load
1	Vented Attic/L/Metal	(0.025)	38.0/0.0	693	0.8	580 Btuh
2	Vented Attic/L/Metal	(0.025)	38.0/0.0	1947	0.8	1631 Btuh
	Ceiling Total			2640(sqft)		2211Btuh

Floors	Type	Ueff.	R-Value	Size X	HTM=	Load
1	Slab On Grade	(1.180)	0.0	137.0 ft(perim.)	38.9	5335 Btuh
2	Slab On Grade	(1.180)	0.0	74.0 ft(perim.)	38.9	2882 Btuh
	Floor Total			2640 sqft		8216 Btuh

	Envelope Subtotal:	22555 Btuh

Infiltration	Type	Wholehouse	ACH	Volume(cuft)	Wall Ratio	CFM=	
	Natural		0.29	26400	1.00	128.8	4672 Btuh

Duct load	(DLM of Mixed ducts)	5726 Btuh
All Zones	**Sensible Subtotal All Zones**	**32954 Btuh**

202869

Manual J Winter Calculations

Residential Load - Component Details (continued)

1710 Manatee Ave E
Bradenton, FL

Project Title:
1710 Manatee Ave E
Building Type: User

6/25/2020

WHOLE HOUSE TOTALS

Totals for Heating	Subtotal Sensible Heat Loss	32954 Btuh
	Ventilation Sensible Heat Loss	0 Btuh
	Total Heat Loss	32954 Btuh

EQUIPMENT

1. Electric Heat Pump	#	30000 Btuh
2. Electric Heat Pump	#	24000 Btuh

Key: Window types - NFRC (Requires U-Factor and Shading coefficient(SHGC) of glass as numerical values)
or - Glass as 'Clear' or 'Tint' (Uses U-Factor and SHGC defaults)
U - (Window U-Factor)
HTM - (ManualJ Heat Transfer Multiplier)

Prepared by ACCA MANUAL J

Version 8

202869

FOUNDATION DESIGN BASED ON MINIMUM OF 2000 PSF BEARING CAPACITY
GENERAL CONTRACTOR SHALL HAVE GEOTECHNICAL FIRM VERIFY PRIOR TO POURING FOOTINGS

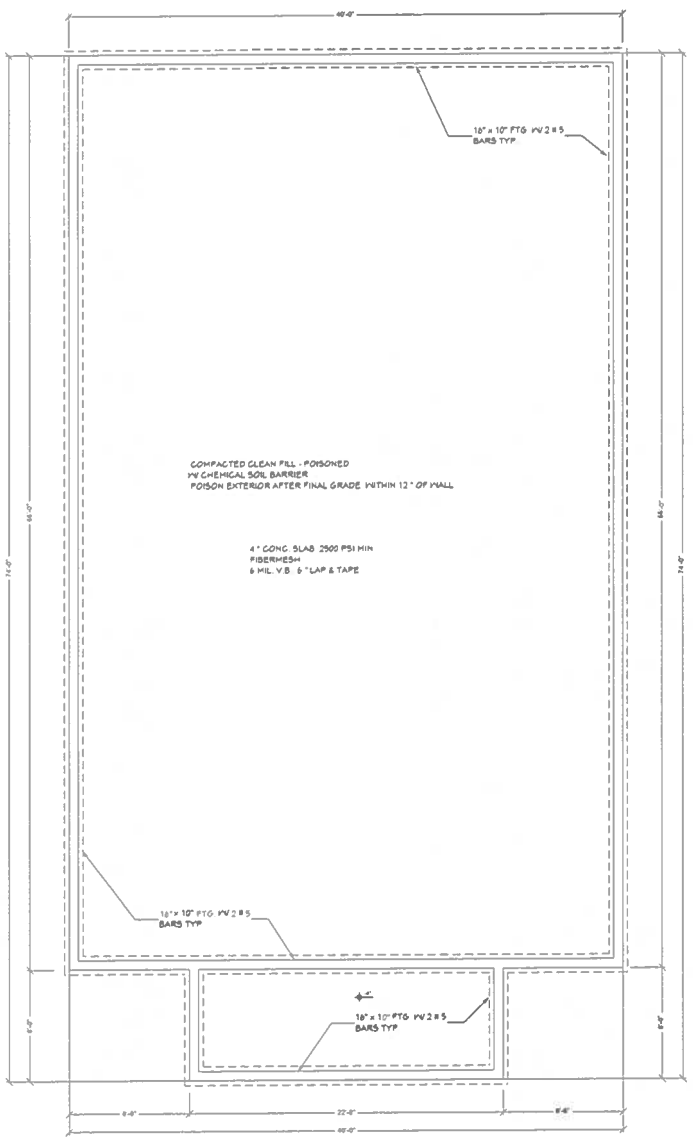

FOUNDATION PLAN SCALE 1/4" = 1'-0"

ATTIC ACCESS INSULATION PER FBC ENERGY CODE SECTION R 402.2.4
LIGHTING PER FBC ENERGY CODE SECTION R 404.1
PROVIDE CLEARANCE FOR SERVICING PER FBC RESIDENTIAL SECTION M 1305.1.2

DESIGN CRITERIA
STRUCTURAL DESIGN PER FBC 2017 6TH EDITION
2017 FBC RESIDENTIAL NEC 2014
130 MPH WIND LOADS 3 SECOND GUST
EXPOSURE "B" ENCLOSED
ROOF LIVE LOADS 20 PSF
WALL WIND LOADS +17.8 / -19.6
ROOF WIND LOADS + 8.5 / -38.6
WALL COMPONENT & CLADDING + 24.2 / -32.4
ROOF COMPONENT & CLADDING + 29.8 / -39.1
ROOF OVERHANGS - 5' -6
RISK CATEGORY II
TYPE VB CONSTRUCTION - UNPROTECTED

WINDOW PROTECTION REQUIRED
(SHUTTERS IMPACT GLASS OR PLYWOOD)
WINDOWS & DOORS + 24.2PSF / - 34.2 PSF

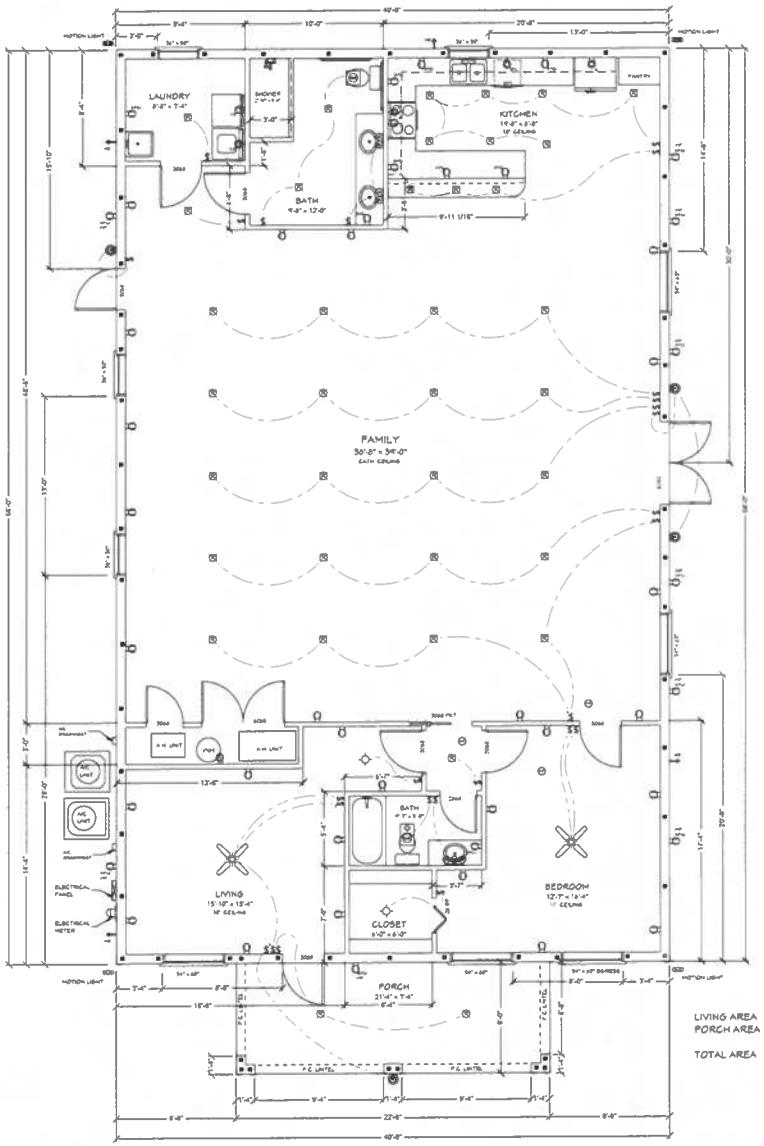

LIVING AREA 2640 SQ. FT.
PORCH AREA 182 SQ. FT.

TOTAL AREA 2822 SQ. FT.

FLOOR PLAN SCALE 1/4" = 1'-0"

ELECTRICAL NOTES:
1 ALL EXTERIOR OUTLETS SHALL BE WP-GFCI
2 ALL KITCHEN COUNTER AND BATHROOM VANITY OUTLETS TO BE GFCI
3 ALL OUTLETS TO BE ARC-FAULT INTERUPTOR PROTECTED
4 SMOKE/CO2 DETECTORS TO BE HARD WIRED INSIDE ALL BEDROOMS AND ONE WITHIN 6 ' OUTSIDE OF BEDROOM

DO NOT SCALE PLANS
CONTRACTOR TO VERIFY ALL ASPECTS OF THIS PLAN PRIOR TO THE START OF CONSTRUCTION
SEPTEMBER 2017

COKER ZIMMERMANN
DRAFTING & DESIGN SERVICE
2502 47th ST W BRADENTON FLA.
PH: 941-748-5221

SEAL:

BUILDING PLANS FOR:
1710 MANATEE AVENUE EAST
BRADENTON, FL.

JUNE 1 2020

1
3

Digitally signed by Milan Slovak
DN: c=US, o=Unaffiliated, oid=A01410C00000170F9323C8A00012CB8, cn=Milan Slovak
Date: 2020.07.24 13:23:52 -04'00'

202869

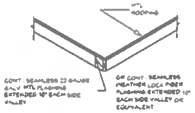

VALLEY DETAIL
N.T.S

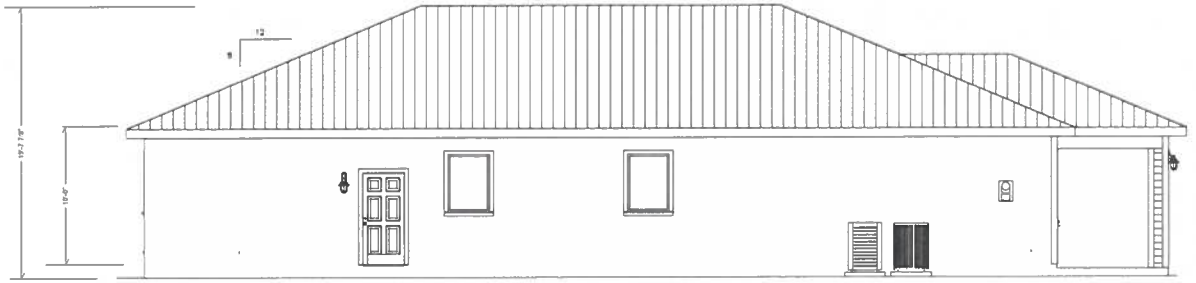

WEST ELEVATION SCALE 1/4" = 1'-0"

ROOF VENTS - 2622 / 2 = 1411 / 750 = 1.89 = 2 VENTS

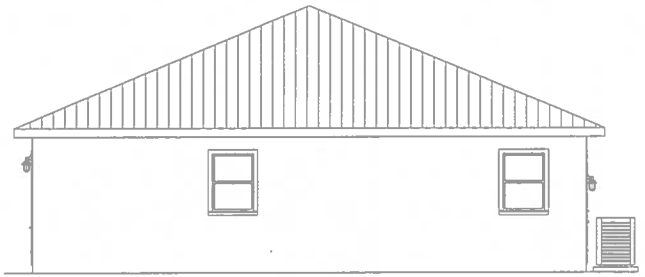

SOUTH ELEVATION SCALE 1/4" = 1'-0"

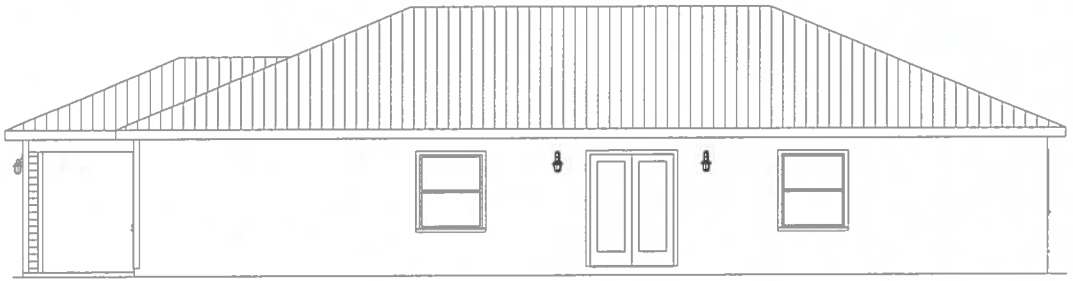

EAST ELEVATION SCALE 1/4" = 1'-0"

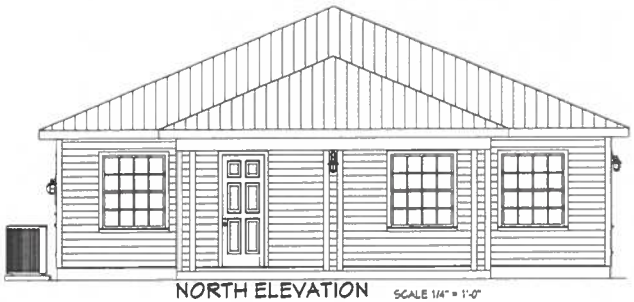

NORTH ELEVATION SCALE 1/4" = 1'-0"

THE ENGINEER OF RECORD DELEGATES THE DESIGN OF THE PRE-ENGINEERED TRUSSES TO A TRUSS DESIGN ENGINEER AND A TRUSS SYSTEM DESIGN ENGINEER. BOTH ENGINEERS MUST HAVE CURRENT FLORIDA PROFESSIONAL ENGINEERING LICENSES AND BE QUALIFIED TO PERFORM THE DELEGATED DESIGN WORK.

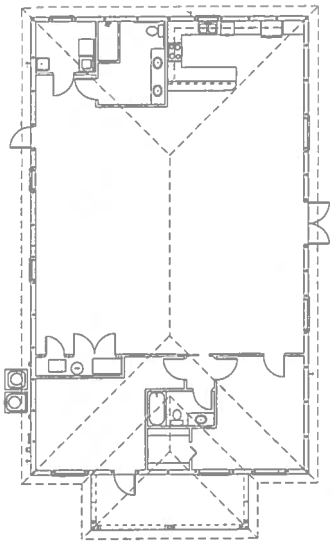

ROOF PITCH 5/12
PRE-ENGINEERED ROOF TRUSS @ 16" O.C.
ROOF OVERHANG 24"

ROOF PLAN

SCALE 1/8" = 1'-0"

DO NOT SCALE PLANS. CONTRACTOR TO VERIFY ALL ASPECTS OF THIS PLAN PRIOR TO THE START OF CONSTRUCTION COPYRIGHT 2020

COKER ZIMMERMANN
DRAFTING & DESIGN SERVICE
2502 9th ST. W. BRADENTON, FLA
PH. 941-746-5221

BUILDING PLANS FOR:
1710 MANATEE AVENUE EAST
BRADENTON, FL.

SEAL:

JUNE 1 2020

2
3

202869

PLYWOODIGYPBOARD SHEATHING NOTES:

1. ALL PLYWOOD CONSTRUCTION SHALL BE IN ACCORDANCE WITH THE AMERICAN PLYWOOD ASSOCIATION (APA) SPECIFICATIONS
2. ALL ROOF PANEL SHEATHING SHALL BE 15/32" (1/2" NOM.) EXPOSURE 1 APA RATED SHEATHING. SUITABLE EDGE SUPPORT SHALL BE PROVIDED BY USE OF PANEL CLIPS OR BLOCKING BETWEEN FRAMING. SEE NAILING SCHEDULE IF NOT SPECIFIED, CONNECT ROOF SHEATHING WITH 8d RING SHANK NAILS AT 6" O.C. AT SUPPORTED PANEL EDGES AND 4" O.C. AT RIDGES AND HIPS OVER 36" NOMINAL PLYWOOD USE 10d NAILS INTERMEDIATE SUPPORTS NOTE 4" O.C. NAILING PATTERN WITHIN 48" OF ALL ROOF EDGES
3. INSTALL ALL PLYWOOD SHEATHING WITH THE LONG DIMENSION OF THE PANEL ACROSS SUPPORTS AND WITH THE PANEL CONTINUOUS OVER TWO OR MORE SPANS. STAGGER PANEL END JOINTS. ALLOW 1/8" SPACING AT PANEL ENDS AND EDGES UNLESS OTHERWISE RECOMMENDED BY THE SHEATHING MANUFACTURER.
4. ALL NAILING SHALL BE CAREFULLY DRIVEN AND NOT OVERDRIVEN. THE USE OF STAPLES ARE PROHIBITED

WOOD FRAMING NOTES:

1. WOOD CONSTRUCTION, CONNECTIONS AND NAILING REQUIREMENTS SHALL CONFORM TO THE "FLORIDA BUILDING CODE"
2. ALL WOOD FRAMING MATERIAL SHALL BE SURFACED DRY AND USED AT 19% MAXIMUM MOISTURE CONTENT
3. ALL LOAD BEARING WALL FRAMING SHALL BE NO. 2 GRADE SPF OR HEM-FIR
4. ALL JOIST AND RAFTER FRAMING SHALL BE NO. 2 GRADE, SOUTHERN PINE OR HEM-FIR
5. ALL FRAMING EXPOSED TO THE WEATHER OR IN CONTACT WITH MASONRY OR CONCRETE SHALL BE PRESSURE-TREATED IN ACCORDANCE WITH THE AMERICAN WOOD PRESERVERS ASSOCIATION SPECIFICATION'S
6. BOLT HEADS SHALL BE CAREFULLY CENTERED AND DRILLED NOT MORE THAN 1/1 8" LARGER THAN THE BOLT DIAMETER. BOLTED CONNECTIONS SHALL BE SNUGGED TIGHT BUT NOT TO THE EXTENT OF CRUSHING WOOD UNDER WASHERS.
7. PREFABRICATED "MICRO-LAM" LUMBER HEADERS AND BEAMS SHALL AS MANUFACTURED BY "TRUSS JOIST MACMILLIAN CORP." BOISE, IDAHO OR APPROVED EQUAL. DO NOT CUT OR NOTCH MICRO-LAM MATERIAL WITHOUT THE MANUFACTURER'S APPROVAL.
8. PREFABRICATED METAL JOIST HANGERS, HURRICANE CLIPS, HOLD-DOWN ANCHORS AND OTHER ACCESSORIES SHALL BE AS MANUFACTURED BY "SIMPSON STRONG TIE COMPANY", OR EQUAL. INSTALL ALL ACCESSORIES AS PER THE MANUFACTURER'S REQUIREMENTS. ALL STEEL SHALL HAVE A MINIMUM "THICKNESS OF 0.04 INCHES (PER ASTM A446, GRADE A) AND BE GALVANIZED (COATING 060

ATTENTION: ALL SIMPSON CONNECTORS IN CONTACT WITH ACQ, CBA, CA-B, AND NON-DOT TREATED LUMBER MUST HAVE THE FOLLOWING

SIMPSON STRONG TIE PRODUCT FINISH	FASTENERS
DWN (G185)	HOT DIPPED GALVANIZED
POST - HOT DIPPED GALVANIZED (HDG)	HOT DIPPED GALVANIZED
997300 (STAINLESS STEEL)	STAINLESS STEEL

NOTE: ACQ-2 TREATED LUMBER MUST HAVE ALL STAINLESS TIES AND FASTENERS
NOTE: SBX (DOT SODIUM BORATE) TREATED LUMBER CAN HAVE EITHER THE ABOVE FINISHES OR STANDARD (G90)

SHEATHING AND NAILING SCHEDULE

AREA	SHEATHING	NAIL SIZE	SPACING
ROOF	15/32 (1/2") EXP-1 5 PLY MINIMUM	8d RING SHANK	4" O.C. EDGES 6" O.C. FIELD ** 4" O.C.
WALL	15/32 (1/2") EXP-1	8d COMMON	6" O.C. EDGES 8" O.C. FIELD

NOTES
** NAIL ROOF 4" O.C. WITHIN 48" OF ALL ROOF EDGES, RIDGES AND HIPS

SAFE LOAD TABLE FOR CAST-CONCRETE HIGH-STRENGTH PRECAST & PRESTRESSED U LINTELS

	LENGTH	SAFE LOAD - POUNDS PER LINEAR FOOT	
		UNFILLED	FILLED *
L 1	4' - 0" (48")	1,696 lbs.	4,888 lbs.
L 2	6' - 0" (72")	1,488 lbs.	4,176 lbs.
L 3	8' - 0" (96")	1,344 lbs.	3,672 lbs.
L 4	9' - 10" (118")	1,248 lbs.	3,360 lbs.
L 5	12' - 0" (144")	1,144 lbs.	3,048 lbs.
L 6	14' - 0" (168")	1,056 lbs.	2,808 lbs.
L 7	16' - 0" (192")	1,008 lbs.	2,760 lbs.
L 8	18' - 0" (216")	952 lbs.	1,888 lbs.
L 9	20' - 0" (240")	888 lbs.	1,632 lbs.
L 10	22' - 0" (264")	784 lbs.	1,384 lbs.
L 11	24' - 0" (288")	680 lbs.	1,240 lbs.
L 12	26' - 0" (312")	568 lbs.	1,096 lbs.
L 13	28' - 0" (336")	544 lbs.	1,040 lbs.
L 14	30' - 0" (360")	512 lbs.	1,000 lbs.
L 15	32' - 0" (384")	480 lbs.	952 lbs.
L 16	34' - 0" (408")	464 lbs.	904 lbs.

NOTES
1. SPACING TO MATCH BLOCK COURSING. MAXIMUM SPACING OF 72" O.C. FOR 8" BLOCK WALLS.
2. *FILLED PRECAST LINTELS TO HAVE 4" OF 2,500 PSI CONCRETE IN BLOCK CORE OF ADJACENT BLOCKS ON EACH SIDE OF LINTEL.

NOTE: ALL FLORIDA PRODUCT APPROVAL NUMBERS AND NOA'S PROVIDED BY THE BUILDING CONTRACTOR SHALL BARCODE THE FLORIDA PRODUCT APPROVAL SHEETS AND ADD A PROVIDED ON THIS PLAN

NOA'S

ITEM	MFGR	MODEL #	NOA #	EXPIRATION
DOORS				
SLIDING GLASS	PGT	WINGUARD	11-1216.22	9/1/2021
	PGT	2500 SERIES ALUMINUM	12-0724.08	9/1/2021
	PGT		11-1201.01	9/1/2021
SLIDER				
FRENCH				
	PGT	SERIES 70-902	12-0916.12	9/1/2021
	EUROTECH INDUST		16-0227.10	9/1/2021
OUTSWING / HINGED				
	EUROTECH INDUST	FIBERGLASS	14-0908.19	6/1/2021
GARAGE / OVERHEAD				
	METAL GLASS DOORS CORP	ROLLUP - ALUM. W/ SELECTORIAL STYLES	14-0829.16	9/1/2021
				9/23/2021
ROOFING				
SHINGLES	GAF	GRAND CANYON	16-1019.03	9/1/2021
		TIMBERLINE	16-0811.10	2/1/2022
BITUMEN MEMBRANE	CERTAIN TEED CORP		19-0329.01	6/19/2021
TILE	BOW TILE CORP	CLAY TILE	15-1119.07	9/1/21
	EUROTILE INC	SPANISH CLAY TILE	13-0904.13	9/1/2021
	EUROTILE INC	CONCRETE ROOF	13-0904.13	9/1/2021
METAL	EUROTILE INC	RV METAL	13-0904.13	9/1/2021
	DECRA	CANYON SHINGLE	11-0628.01	6/19/2021
	ALL METAL ROOF	TILE & SHINGLE	12-0828.20	9/23/2021
SOFFIT				
SOLID VENTED	VINYL SOFFIT	SOFFIT	04-0604.12	6/1/2021
SOFFIT SOLID	ALUMINUM SOFFIT	SOFFIT	04-0604.12	6/1/2021
ROOF VENTS				
	ATLANTIC RIDGE VENT	ROOF RIDGE VENT	19-0618.11	9/1/2021
	ATLANTIC RIDGE VENT		14-0221.14	9/1/2021
WINDOWS				
	PGT	DOUBLE / SINGLE HUNG	11-1219.22	9/1/21
	PGT	SLIDER	11-1201.01	9/1/2021
	PGT	FIXED		9/1/21
IMPACT WINDOWS	PGT	DOUBLE / SINGLE HUNG	11-1219.16, 17, 1613.16	9/1/2021
IMPACT WINDOWS	PGT	SLIDER	11-1114.04, 11-1114.06	12/1/2021
IMPACT WINDOWS	PGT	FIXED	11-1114.16, 11-1114.18	9/1/2021
	PGT		11-1219.16, 11-1613.16	9/1/2021
AWNINGS			12-0917.01	9/23/2021
GLASS BLOCK	PITTSBURG CORNING	GLASS BLOCK	M 8722.87	6/23/2021
CONCRETE LINTEL				
	CAST CRETE USA	LINTELS		9/1/2021
FASCIAS				
	HUNTER BUILDING	HUNT FASCIA	16-0129.06	9/6/2021
SIDING				
	JAMES HARDIE	HARDIPLANK	12-0911.19	9/1/2021
	UNIVERSAL FORMED	WOOD SIDING	14-0422.14	9/1/2021
	TRESTA NORTH AMERICA	WOOD PANEL	13-1111.01	1/6/2021
ANCHORS				
FASTENERS	SIMPSON		FL 2866.16	
CONNECTORS	SIMPSON		FL 16891.08	

FLORIDA PRODUCT APPROVAL #

THIS IS A PARTIAL LIST AND OF COMPONENTS & MANUFACTURERS
CONTRACTOR IS RESPONSIBLE FOR ENSURING NOT ALL COMPONENTS EXIST A PRODUCT APPROVAL

BUCK DETAILS

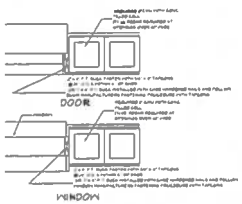

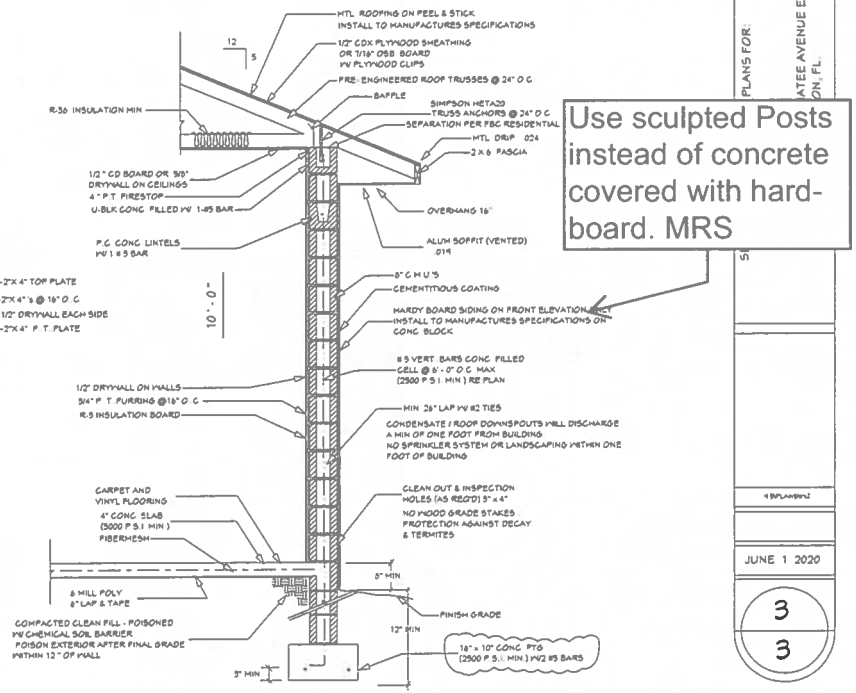

TYPICAL WALL SECTION
3/4 " = 1' - 0"

Use sculpted Posts instead of concrete covered with hard-board. MRS

DO NOT SCALE PLANS. CONTRACTOR TO VERIFY ALL ASPECTS OF THIS PLAN PRIOR TO CONSTRUCTION. COPYRIGHT 2020

COKER ZIMMERMANN
DRAFTING & DESIGN SERVICE
2502 43 ST W BRADENTON FLA
PH 941-746-5221

PLANS FOR:
ATEE AVENUE EAST
ON, FL.

JUNE 1 2020

3
3

202869

F. C. SURVEYING, PLLC d/b/a
Florida Coast Surveying
PROFESSIONAL SURVEYOR'S, & MAPPER'S
CERTIFICATE NO. LB-0006938
P.O. BOX 20365
BRADENTON, FLORIDA 34204
941-744-9295 FAX 941-748-6751
CINDYCRIDER@FLORIDACOASTSURVEYING.COM

SCALE 1" = 30'
NOTE: SUBJECT PROPERTY IS ON CENTRAL WATER

FLOOD ZONE : X
COMMUNITY PANEL 12081C 0306E
DATED : 3-17-14
(FLOOD ZONE : "B","C","D", & "X" ARE NOT IN DESIGNATED FLOOD HAZARD ZONE AREA.) SUBJECT TO VERIFICATION

STREET ADDRESS
1710 MANATEE AVENUE EAST
BRADENTON, FLORIDA 34208

BOUNDARY SURVEY
OF
THAT CERTAIN PARCEL OF LAND SHOWN HEREON
LYING AND BEING IN
SECTION 30, TOWNSHIP 34 SOUTH, RANGE 18 EAST
MANATEE COUNTY, FLORIDA

NOTE:
IN COMPLIANCE WITH FLORIDA STATUTES 5J-17.052.2 (D) (4) (IF LOCATION OF EASEMENTS OR RIGHT-OF-WAY OF RECORD, OTHER THAN THOSE ON RECORD PLAT, IS REQUIRED, THIS INFORMATION MUST BE FURNISHED TO THE SURVEYOR AND MAPPER.

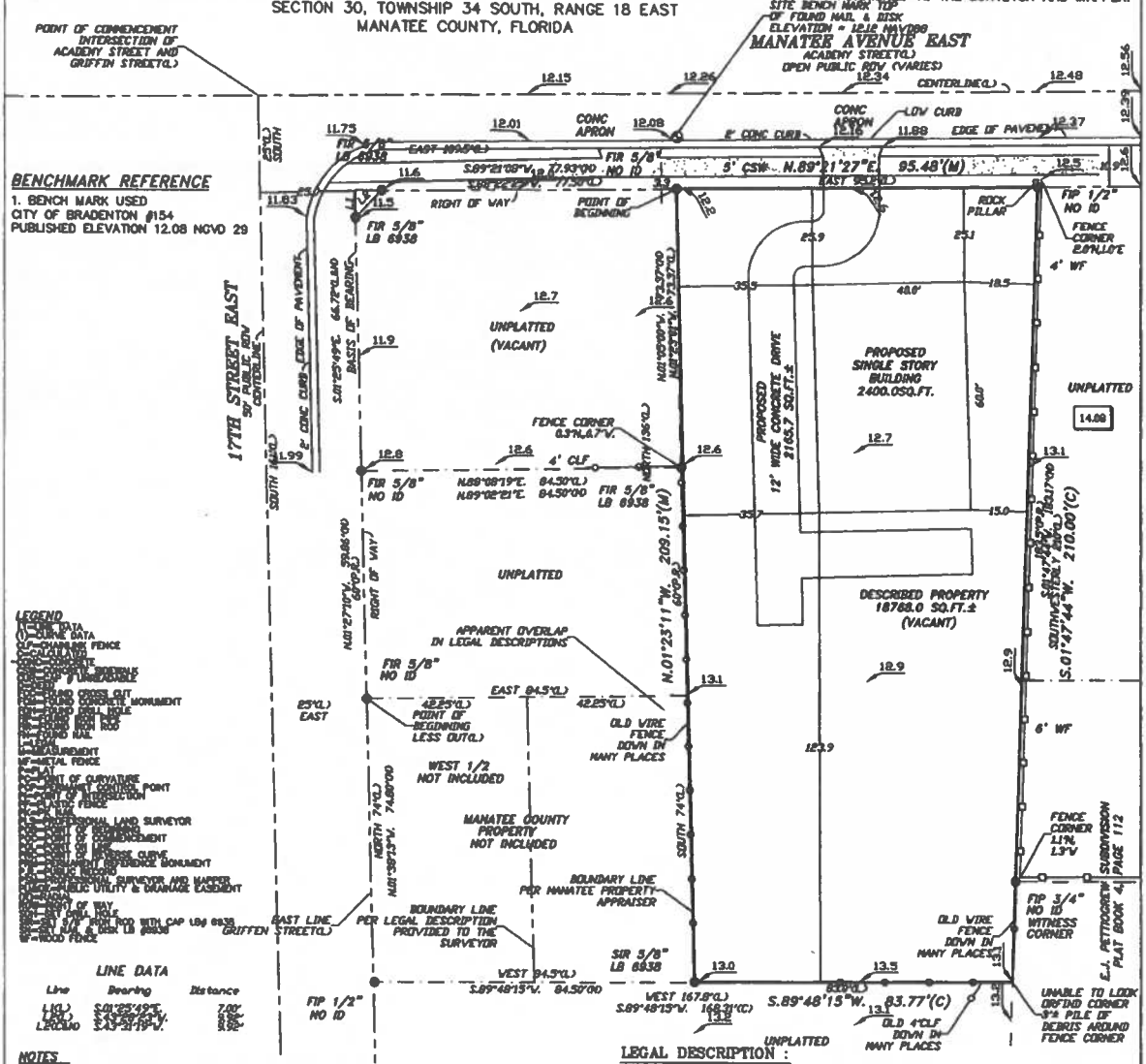

BENCHMARK REFERENCE
1. BENCH MARK USED
CITY OF BRADENTON #154
PUBLISHED ELEVATION 12.08 NGVD 29

LEGEND
(C)=CALCULATED DATA
(D)=DEED DATA
OHW=OVERHEAD WIRE FENCE
CLF=CHAIN LINK FENCE
WF=WOOD FENCE
MF=METAL FENCE
POC=POINT OF COMMENCEMENT
POB=POINT OF BEGINNING
PSM=PROFESSIONAL LAND SURVEYOR
FIR=FOUND IRON ROD
FIP=FOUND IRON PIPE
SIR=SET IRON ROD
SIP=SET IRON PIPE
CM=CONCRETE MONUMENT
PRM=PERMANENT REFERENCE MONUMENT
P.S.M.=PROFESSIONAL SURVEYOR AND MAPPER
P.U.E.=PUBLIC UTILITY & DRAINAGE EASEMENT
R/W=RIGHT OF WAY
FND=FOUND
SET=SET IRON ROD
CAP=CAP
LB#=LICENSED BUSINESS #
L(C)=LONG CHORD
R=RADIUS
Δ=DELTA ANGLE
L=ARC LENGTH
CB=CHORD BEARING
CH=CHORD DISTANCE
NAVD=NORTH AMERICAN VERTICAL DATUM
NGVD=NATIONAL GEODETIC VERTICAL DATUM

LINE DATA

Line	Bearing	Distance
L1(C)	S.01°25'42"E.	7.00'
L2(C)	S.89°48'15"W.	9.96'
L2(C)AD	S.89°48'15"W.	9.96'

NOTES
1. THE ACCURACY OF THIS SURVEY MEETS REQUIREMENTS AS SET FORTH IN 5J-17.051(3)(b)(1) SUBURBAN: LINEAR: 1 FOOT IN 7,500 FEET
2. BEARINGS ARE BASED ON PLAT OR OTHERWISE SHOWN
3. THE LEGAL DESCRIPTION SHOWN HEREON IS PROVIDED BY CLIENT UNLESS NOTED OTHERWISE
4. THERE MAY BE ADDITIONAL RESTRICTIONS AND/OR EASEMENTS THAT ARE NOT RECORDED ON SAID PLAT THAT MAY BE FOUND IN THE PUBLIC RECORDS OF THIS COUNTY.
5. THE BUILDING DIMENSION HEREON ARE TO THE NEAREST TENTH OF A FOOT AND SHOULD NOT BE USED FOR DESIGN USE OF ANY KIND.
6. THIS SURVEY IS LIMITED TO VISIBLE EVIDENCE OF THE CLIENT OR THE PROJECT ONLY, TO ANY CLAIM OF ANY NATURE WHATSOEVER ARISING OUT OF OR RELATED TO THE SURVEY, THE SURVEYOR'S TOTAL LIABILITY TO ALL THOSE RELYING ON THE SURVEY SHALL NOT EXCEED THE SURVEYOR'S TOTAL FEE FOR SERVICES RENDERED.
7. OWNERSHIP OF FENCES, IF ANY, WERE NOT DETERMINED AS PART OF THIS SURVEY.
8. REUSE OF THIS SURVEY FOR THE PURPOSE OTHER THAN WHICH IT WAS INTENDED, WITHOUT WRITTEN VERIFICATION, WILL BE AT THE USERS SOLE RISK AND WITHOUT LIABILITY TO THE SURVEYOR. NOTHING HEREIN SHALL BE CONSTRUED TO GIVE ANY RIGHTS OR BENEFITS TO ANYONE OTHER THAN THOSE CERTIFIED.
9. ELEVATIONS SHOWN HEREON ARE BASED ON NORTH AMERICAN VERTICAL DATUM OF 1988 (NAVD 88) UNLESS NOTED.
10. UNDERGROUND ENCROACHMENTS IF ANY NOT LOCATED.

LEGAL DESCRIPTION :
BEGIN 109.5 FEET EAST AND 25 FEET SOUTH OF THE INTERSECTION LINE OF ACADEMY AND GRIFFIN STREETS, THENCE EAST 95.2 FEET TO A FENCE; THENCE SOUTHWESTERLY ALONG SAID FENCE 210 FEET; THENCE WEST 167.8 FEET TO THE EAST PROPERTY LINE OF GRIFFIN STREET, THENCE NORTH 74 FEET; THENCE EAST 84.5 FEET; THENCE NORTH 136 FEET TO THE POINT OF BEGINNING, ALL LYING AND BEING SITUATED IN MANATEE COUNTY, FLORIDA, FLORIDA.
LESS: WEST ONE-HALF 1/2 OF LOT IN THE CITY OF MANATEE, FLORIDA, FACING 17TH STREET (FORMERLY GRIFFEN STREET) HAVING A FRONTAGE OF 74 FEET AND RUNNING EAST 84.5 FEET. LOCATED ON THIS LOT IS A CONCRETE BLOCK HOUSE BUILT BY PROF. KENDALL AS AN INDUSTRIAL INSTITUTE, MORE PARTICULARLY DESCRIBED AS FOLLOWS; BEGIN 25 FEET EAST AND 161 FEET SOUTH OF THE INTERSECTION LINE OF ACADEMY AND GRIFFEN STREETS; THENCE EAST 84.5 FEET; THENCE SOUTH 74 FEET; THENCE WEST 84.5 FEET; THENCE NORTH 74 FEET TO THE POINT OF BEGINNING.

CERTIFICATION
I CERTIFY THAT THIS SURVEY WAS MADE UNDER MY DIRECTION AND THAT IT MEETS THE STANDARDS OF PRACTICE SET FORTH BY THE BOARD OF PROFESSIONAL LAND SURVEYORS AND MAPPERS IN CHAPTER 5J-17.051- 5J-17.052, FLORIDA ADMINISTRATIVE CODE, PURSUANT TO SECTION 472.027, FLORIDA STATUTES.

BY: _____ SURVEY DATE : 08/27/2019
M. SCOTT CRIDER, PSM #6871
FIP=1/2" NO ID

NOT A CERTIFICATION OF TITLE, ZONING, EASEMENTS OR FREEDOM OF ENCUMBRANCES.
"UNLESS IT BEARS THE SIGNATURE AND THE ORIGINAL RAISED SEAL OF A FLORIDA LICENSED SURVEYOR AND MAPPER THIS DRAWING, SKETCH, PLAT OR MAP IS FOR INFORMATIONAL PURPOSES ONLY AND IS NOT VALID"
THIS SURVEY/REPORT IS PROVIDED IN HARD COPY FORMAT ONLY. ALL GRAPHIC AND TEXT DATA IS COPYRIGHTED.

LEGEND
5.51 =GARAGE FLOOR ELEVATION
6.50 =RESIDENCE FLOOR ELEVATION
6.0 =EXISTING ELEVATIONS

NOTE:
THIS IS A LIMITED TOPOGRAPHIC SURVEY AND MAY NOT MEET ALL REQUIREMENTS SET FORTH IN 5J-17.052(12) THE PURPOSE IS TO SHOW EXISTING SITE ELEVATIONS ONLY.

CERTIFIED TO :
MEDI - REDI MEDICAL TRANSPORT

DRAWN BY:	REVISIONS
S.C.	9-18-19 ADDED LENDER 4-08-20 ADDED ELEVATIONS 5-05-20 ADDED PROPOSED IMPROVEMENTS
FIELD BOOK	PROJECT NO:
396-70	20_M39509A

Driveway may be modified as long as parking and driveway meet FBC requirements.
FDOT permit may be required. MRS

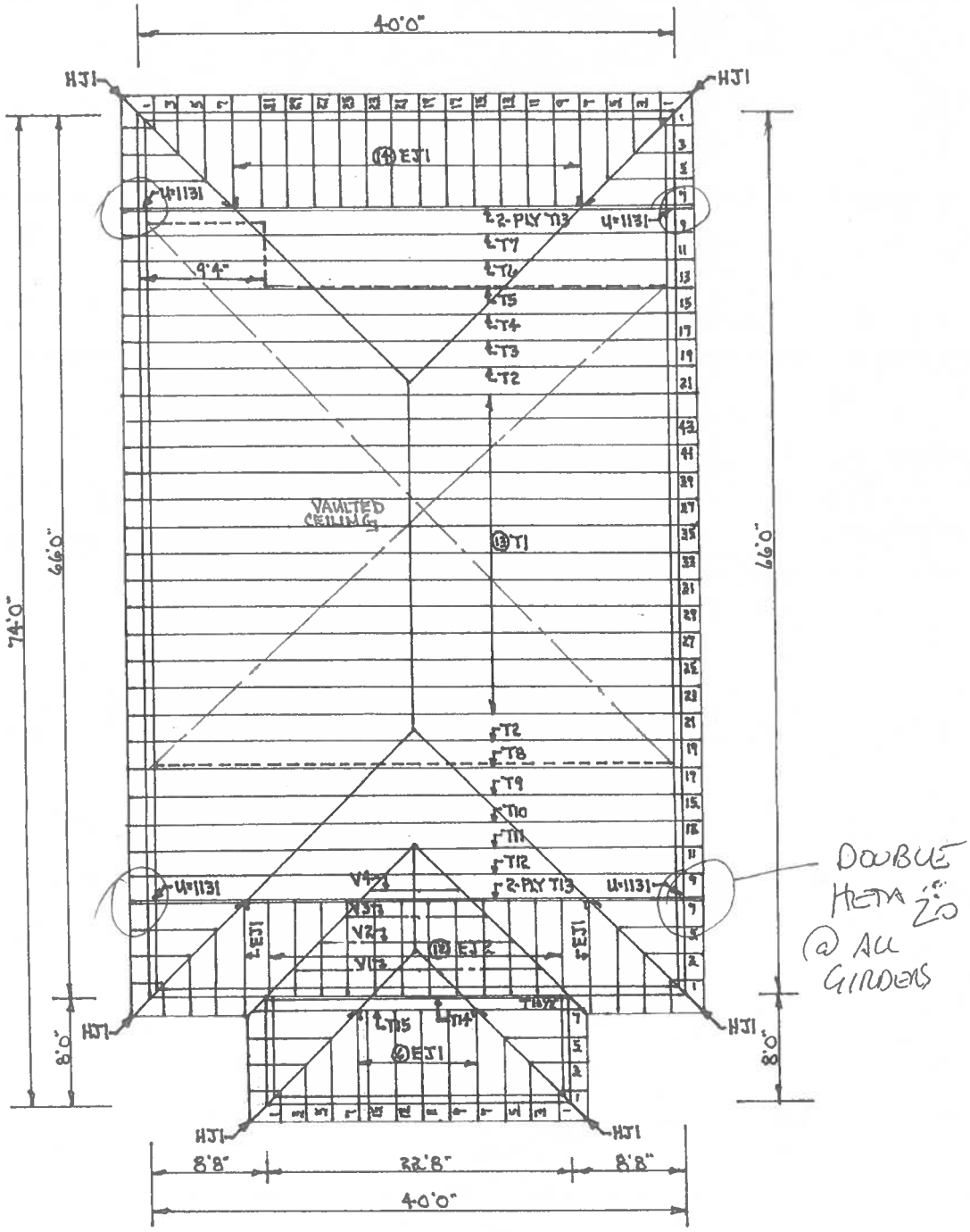

NOTE: UPLIFTS OVER 1000# ARE INDICATED BY U=.

HANGER SCH
THTA26 USE ON HJ1

RICHARD CHEAVES CONST.
JOB-NIKETA JACKSON
5-12 PITCH
16" OVERHANG, PL. CUT
2x TOP-CHORDS
47PSF LOADING-
150MPH WIND LOADING,
EXPOSURE B, ENCLOSED

DRAWN 6-2-20 (RJC)
SARASOTA TRUSS CO.
JOB# 85-20

R & S Professional Engineering Services
Luis A. Rosario, P.E. #61828
Milan S. Slovak, P.E. #67628
COA 29251
920 Palm Ave - Ellenton, FL 34222
Off. (941) 417-2034 (941) 755-7087 E-mail: ped@pedfl.com

6/30/20

202869

R & S Professional Engineering

920 Palm Ave Ellenton, FL 34222
Phone: 941-755-7087 Fax: 941-755-7327

June 30, 2020

Building Department

Re: Truss Review – Jackson

Truss Manufacturer: Sarasota Truss
Job No. Crawford

Truss Engineering: MiTek
Sealed by: Julius Lee, P.E. # 34869
Date: 6/29/20

Dear Sirs;

We have reviewed the new truss package for the above. (2) HETA 20's will be required at all Girder locations.

The layout design and numbers shown are consistent with the intended design of the structure.

Our review was conducted following the guidelines of the Florida Building Code 2017, 5th Edition. Trusses built for 150 mph wind loads, Partially Enclosed, Exposure "B".

Very truly yours,

6/30/20

Milan S. Slovak, P.E.
Fla. Reg. # 67628

202869

Lumber design values are in accordance with ANSI/TPI 1 section 6.3
These truss designs rely on lumber values established by others.

RE: 85-20 - CHEAVES CONST.

MiTek USA, Inc.
6904 Parke East Blvd.
Tampa, FL 33610-4115

Site Information:
Customer Info: RICHARD CHEAVES CONST. Project Name: NIKETA JACKSON Model:
Lot/Block: Subdivision:
Address: 1710 MANATEE AVENUE EAST
City: BRADNTON State: FLA.

Name Address and License # of Structural Engineer of Record, If there is one, for the building.
Name: R & S PROFESSIONAL ENG. SERVICES, LLC License #: COA#29251
Address: 920 PALM AVE.
City: ELLENTON State: FLA. 34222

General Truss Engineering Criteria & Design Loads (Individual Truss Design Drawings Show Special Loading Conditions):
Design Code: FBC2017/TPI2014 Design Program: MiTek 20/20 8.1
Wind Code: ASCE 7-10 Wind Speed: 150 mph
Roof Load: 47.0 psf Floor Load: N/A psf

This package includes 25 individual, Truss Design Drawings and 0 Additional Drawings.
With my seal affixed to this sheet, I hereby certify that I am the Truss Design Engineer and this index sheet conforms to 61G15-31.003, section 5 of the Florida Board of Professional Engineers Rules.

No.	Seal#	Truss Name	Date	No.	Seal#	Truss Name	Date
1	T20589015	EJ1	6/29/20	23	T20589037	V2	6/29/20
2	T20589016	EJ2	6/29/20	24	T20589038	V3	6/29/20
3	T20589017	HJ1	6/29/20	25	T20589039	V4	6/29/20
4	T20589018	J1	6/29/20				
5	T20589019	J2	6/29/20				
6	T20589020	J3	6/29/20				
7	T20589021	T1	6/29/20				
8	T20589022	T2	6/29/20				
9	T20589023	T3	6/29/20				
10	T20589024	T4	6/29/20				
11	T20589025	T5	6/29/20				
12	T20589026	T6	6/29/20				
13	T20589027	T7	6/29/20				
14	T20589028	T8	6/29/20				
15	T20589029	T9	6/29/20				
16	T20589030	T10	6/29/20				
17	T20589031	T11	6/29/20				
18	T20589032	T12	6/29/20				
19	T20589033	T13	6/29/20				
20	T20589034	T14	6/29/20				
21	T20589035	T15	6/29/20				
22	T20589036	V1	6/29/20				

The truss drawing(s) referenced above have been prepared by MiTek USA, Inc. under my direct supervision based on the parameters provided by Manatee County Lumber.
Truss Design Engineer's Name: Lee, Julius
My license renewal date for the state of Florida is February 28, 2021.



Julius Lee PE No 34869
MiTek USA, Inc. FL Cert 6634
6904 Parke East Blvd. Tampa FL 33610
Date:
June 29,2020

IMPORTANT NOTE: The seal on these truss component designs is a certification that the engineer named is licensed in the jurisdiction(s) identified and that the designs comply with ANSI/TPI 1. These designs are based upon parameters shown (e.g., loads, supports, dimensions, shapes and design codes), which were given to MiTek or TRENCO. Any project specific information included is for MiTek's or TRENCO's customers file reference purpose only, and was not taken into account in the preparation of these designs. MiTek or TRENCO has not independently verified the applicability of the design parameters or the designs for any particular building. Before use, the building designer should verify applicability of design parameters and properly incorporate these designs into the overall building design per ANSI/TPI 1, Chapter 2.

202869

Job	Truss	Truss Type	Qty	Ply	CHEAVES CONST. T20589015
85-20	EJ1	JACK	22	1	Job Reference (optional)

Manatee lumber, BRADENTON FL. 8.130 s Mar 11 2018 MiTek Industries, Inc. Mon Jun 29 09:49:25 2020 Page 1
ID:U7NZd4T9PbvFlPkYGJkq_HzAJWi-gxFQc3JjB_7lSSZOllxJyf4PpEuwhAtmpx07hhz1So8

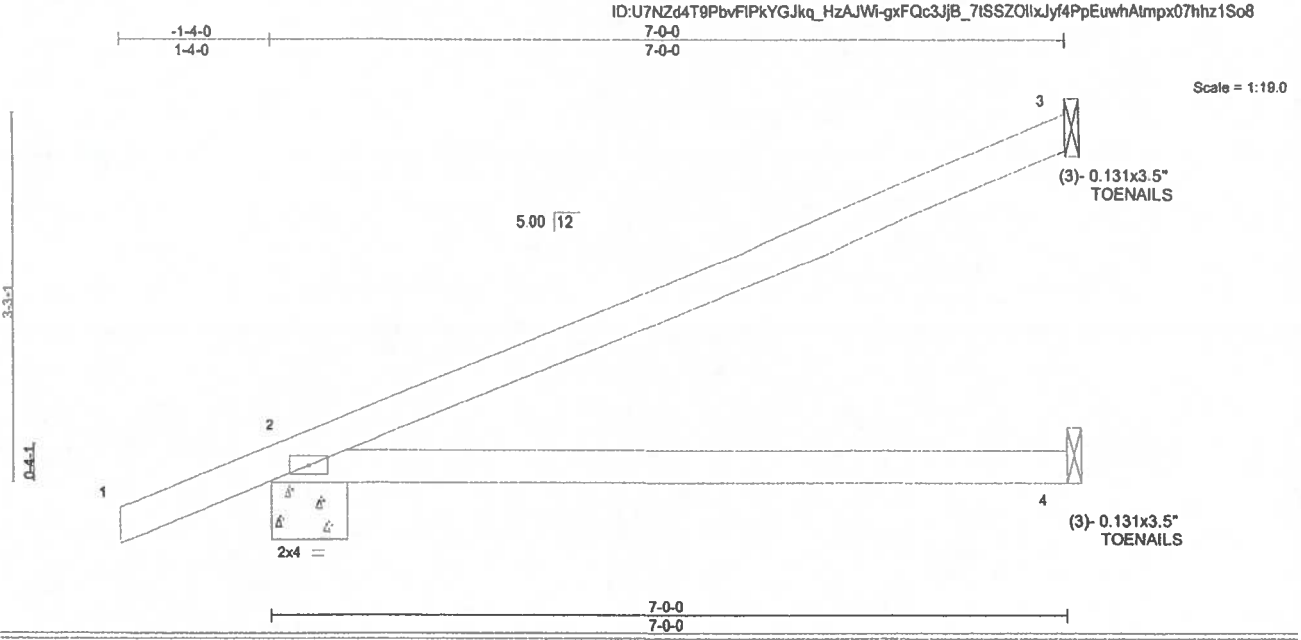

LOADING (psf)		SPACING-	2-0-0	CSI.		DEFL.	in	(loc)	l/defl	L/d	PLATES	GRIP
TCLL	20.0	Plate Grip DOL	1.25	TC	0.90	Vert(LL)	-0.11	2-4	>695	240	MT20	244/190
TCDL	17.0	Lumber DOL	1.25	BC	0.57	Vert(CT)	-0.23	2-4	>347	180		
BCLL	0.0 *	Rep Stress Incr	YES	WB	0.00	Horz(CT)	-0.00	3	n/a	n/a		
BCDL	10.0	Code FBC2017/TPI2014		Matrix-P							Weight: 24 lb	FT = 0%

LUMBER-
TOP CHORD 2x4 SP No.2
BOT CHORD 2x4 SP No.2

BRACING-
TOP CHORD Structural wood sheathing directly applied or 2-2-0 oc purlins.
BOT CHORD Rigid ceiling directly applied or 10-0-0 oc bracing.

REACTIONS. (lb/size) 3=229/Mechanical, 2=449/0-8-0, 4=66/Mechanical
Max Horz 2=119(LC 10)
Max Uplift 3=-102(LC 10), 2=-143(LC 10)
Max Grav 3=229(LC 1), 2=449(LC 1), 4=132(LC 3)

FORCES. (lb) - Max. Comp./Max. Ten. - All forces 250 (lb) or less except when shown.

NOTES-
1) Wind: ASCE 7-10; Vult=150mph (3-second gust) Vasd=116mph; TCDL=2.0psf; BCDL=2.0psf; h=14ft; B=45ft; L=24ft; eave=4ft; Cat. II; Exp B; Encl., GCpi=0.18; MWFRS (directional) and C-C Exterior(2) zone;C-C for members and forces & MWFRS for reactions shown; Lumber DOL=1.60 plate grip DOL=1.60
2) This truss has been designed for a 10.0 psf bottom chord live load nonconcurrent with any other live loads.
3) * This truss has been designed for a live load of 20.0psf on the bottom chord in all areas where a rectangle 3-6-0 tall by 2-0-0 wide will fit between the bottom chord and any other members.
4) Refer to girder(s) for truss to truss connections.
5) Provide mechanical connection (by others) of truss to bearing plate capable of withstanding 102 lb uplift at joint 3 and 143 lb uplift at joint 2.



Julius Lee PE No.34869
MiTek USA, Inc. FL Cert 6634
6904 Parke East Blvd. Tampa FL 33610
Date:
June 29,2020

WARNING - Verify design parameters and READ NOTES ON THIS AND INCLUDED MITEK REFERENCE PAGE MII-7473 rev. 10/03/2015 BEFORE USE.
Design valid for use only with MiTek® connectors. This design is based only upon parameters shown, and is for an individual building component, not a truss system. Before use, the building designer must verify the applicability of design parameters and properly incorporate this design into the overall building design. Bracing indicated is to prevent buckling of individual truss web and/or chord members only. Additional temporary and permanent bracing is always required for stability and to prevent collapse with possible personal injury and property damage. For general guidance regarding the fabrication, storage, delivery, erection and bracing of trusses and truss systems, see *ANSI/TPI1 Quality Criteria, DSB-89 and BCSI Building Component Safety Information* available from Truss Plate Institute, 2670 Crain Highway, Suite 203 Waldorf, MD 20601

MiTek
6904 Parke East Blvd.
Tampa, FL 36610

202869

Job	Truss	Truss Type	Qty	Ply	CHEAVES CONST.
85-20	EJ2	JACK	12	1	T20589016

Job Reference (optional)

Manatee lumber, BRADENTON FL. 8.130 s Mar 11 2018 MiTek Industries, Inc. Mon Jun 29 09:49:26 2020 Page 1

ID:U7NZd4T9PbvFIPkYGJkq_HzAJWi-97popPKMyHFk4c8aJ?TYUsdZweE9Qd7v2blhD7z1So7

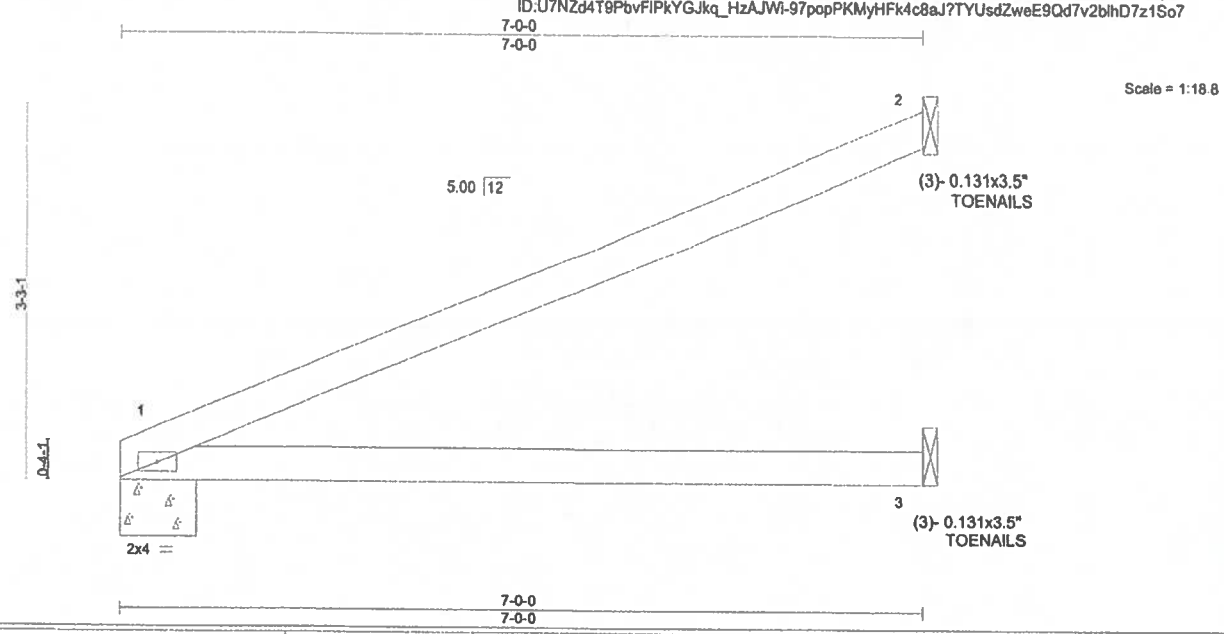

LOADING (psf)		SPACING-	2-0-0	CSI.		DEFL.	in	(loc)	l/defl	L/d	PLATES	GRIP
TCLL	20.0	Plate Grip DOL	1.25	TC	0.94	Vert(LL)	-0.11	1-3	>695	240	MT20	244/190
TCDL	17.0	Lumber DOL	1.25	BC	0.57	Vert(CT)	-0.23	1-3	>347	180		
BCLL	0.0 *	Rep Stress Incr	YES	WB	0.00	Horz(CT)	-0.00	2	n/a	n/a		
BCDL	10.0	Code FBC2017/TPI2014		Matrix-P							Weight: 22 lb	FT = 0%

LUMBER-
TOP CHORD 2x4 SP No.2D
BOT CHORD 2x4 SP No.2

BRACING-
TOP CHORD Structural wood sheathing directly applied.
BOT CHORD Rigid ceiling directly applied or 10-0-0 oc bracing.

REACTIONS. (lb/size) 1=310/0-8-0, 2=244/Mechanical, 3=66/Mechanical
Max Horz 1=93(LC 10)
Max Uplift 1=-58(LC 10), 2=-113(LC 10)
Max Grav 1=310(LC 1), 2=244(LC 1), 3=132(LC 3)

FORCES. (lb) - Max. Comp./Max. Ten. - All forces 250 (lb) or less except when shown.

NOTES-
1) Wind: ASCE 7-10; Vult=150mph (3-second gust) Vasd=116mph; TCDL=2.0psf; BCDL=2.0psf; h=14ft; B=45ft; L=24ft; eave=4ft; Cat. II; Exp B; Encl., GCpi=0.18; MWFRS (directional) and C-C Exterior(2) zone;C-C for members and forces & MWFRS for reactions shown; Lumber DOL=1.60 plate grip DOL=1.60
2) This truss has been designed for a 10.0 psf bottom chord live load nonconcurrent with any other live loads.
3) * This truss has been designed for a live load of 20.0psf on the bottom chord in all areas where a rectangle 3-6-0 tall by 2-0-0 wide will fit between the bottom chord and any other members.
4) Refer to girder(s) for truss to truss connections.
5) Provide mechanical connection (by others) of truss to bearing plate capable of withstanding 58 lb uplift at joint 1 and 113 lb uplift at joint 2.



Julius Lee PE No.34869
MiTek USA, Inc. FL Cert 6634
6904 Parke East Blvd. Tampa FL 33610
Date:

June 29,2020

WARNING - Verify design parameters and READ NOTES ON THIS AND INCLUDED MITEK REFERENCE PAGE MII-7473 rev. 10/03/2015 BEFORE USE.
Design valid for use only with MiTek® connectors. This design is based only upon parameters shown, and is for an individual building component, not a truss system. Before use, the building designer must verify the applicability of design parameters and properly incorporate this design into the overall building design. Bracing indicated is to prevent buckling of individual truss web and/or chord members only. Additional temporary and permanent bracing is always required for stability and to prevent collapse with possible personal injury and property damage. For general guidance regarding the fabrication, storage, delivery, erection and bracing of trusses and truss systems, see *ANSI/TPI1 Quality Criteria, DSB-89 and BCSI Building Component Safety Information* available from Truss Plate Institute, 2670 Crain Highway, Suite 203 Waldorf, MD 20601

MiTek
6904 Parke East Blvd.
Tampa, FL 33610

202869

Job	Truss	Truss Type	Qty	Ply	CHEAVES CONST.
85-20	HJ1	JACK	6	1	T20589017
					Job Reference (optional)

Manatee lumber, BRADENTON FL. 8.130 s Mar 11 2018 MiTek Industries, Inc. Mon Jun 29 09:49:27 2020 Page 1
ID:U7NZd4T9PbvFlPkYGJkq_HzAJWi-dJNA1lK_jbObimjmtj_n149rQ1du9?C3HFVElZz1So6

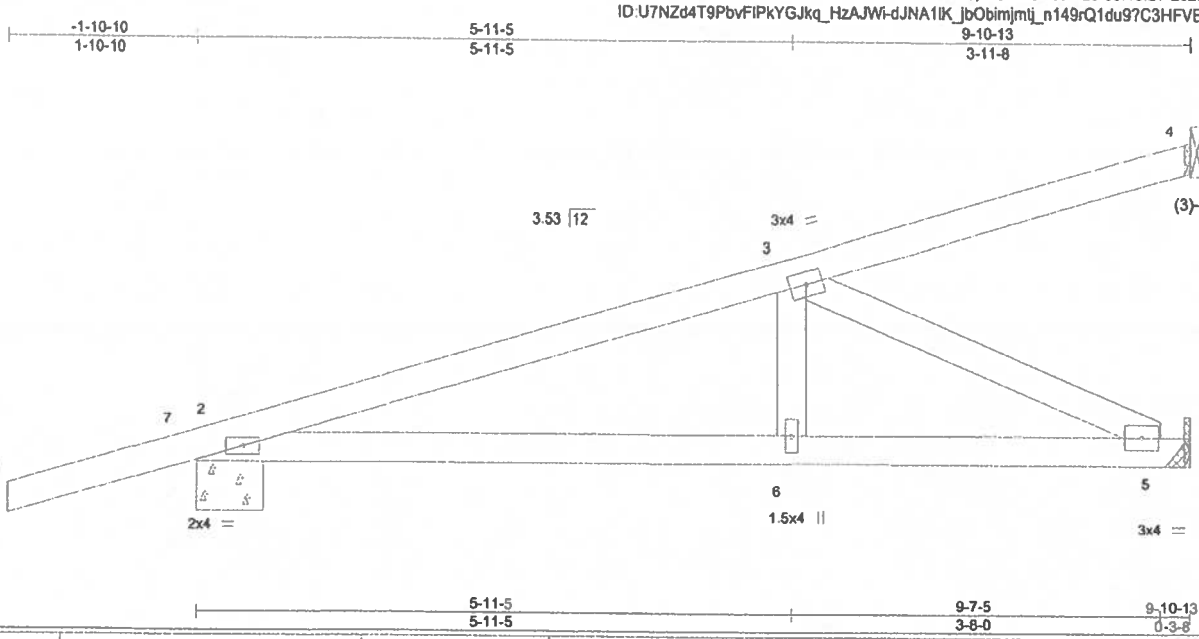

LOADING (psf)		SPACING-	2-0-0	CSI.		DEFL.	in	(loc)	l/defl	L/d	PLATES	GRIP
TCLL	20.0	Plate Grip DOL	1.25	TC	0.50	Vert(LL)	-0.03	2-6	>999	240	MT20	244/190
TCDL	17.0	Lumber DOL	1.25	BC	0.35	Vert(CT)	-0.05	2-6	>999	180		
BCLL	0.0 *	Rep Stress Incr	NO	WB	0.33	Horz(CT)	0.01	5	n/a	n/a		
BCDL	10.0	Code FBC2017/TPI2014		Matrix-R							Weight: 41 lb	FT = 0%

LUMBER-
TOP CHORD 2x4 SP No.2
BOT CHORD 2x4 SP No.2
WEBS 2x4 SP No.3

BRACING-
TOP CHORD Structural wood sheathing directly applied or 5-10-12 oc purlins.
BOT CHORD Rigid ceiling directly applied or 10-0-0 oc bracing.

REACTIONS. (lb/size) 4=259/Mechanical, 2=543/0-8-0, 5=476/Mechanical
Max Horz 2=142(LC 8)
Max Uplift 4=-115(LC 8), 2=-173(LC 8), 5=-101(LC 8)
Max Grav 4=262(LC 13), 2=543(LC 1), 5=476(LC 1)

FORCES. (lb) - Max. Comp./Max. Ten. - All forces 250 (lb) or less except when shown.
TOP CHORD 2-3=-907/130
BOT CHORD 2-6=-226/836, 5-6=-226/836
WEBS 3-5=-929/251

NOTES-
1) Wind: ASCE 7-10; Vult=150mph (3-second gust) Vasd=116mph; TCDL=2.0psf; BCDL=2.0psf; h=14ft; B=45ft; L=24ft; eave=4ft; Cat. II; Exp B; Encl., GCpi=0.18; MWFRS (directional); Lumber DOL=1.60 plate grip DOL=1.60
2) This truss has been designed for a 10.0 psf bottom chord live load nonconcurrent with any other live loads.
3) * This truss has been designed for a live load of 20.0psf on the bottom chord in all areas where a rectangle 3-6-0 tall by 2-0-0 wide will fit between the bottom chord and any other members.
4) Refer to girder(s) for truss to truss connections.
5) Refer to girder(s) for truss to truss connections.
6) Provide mechanical connection (by others) of truss to bearing plate capable of withstanding 115 lb uplift at joint 4, 173 lb uplift at joint 2 and 101 lb uplift at joint 5.
7) In the LOAD CASE(S) section, loads applied to the face of the truss are noted as front (F) or back (B).

LOAD CASE(S) Standard
1) Dead + Roof Live (balanced): Lumber Increase=1.25, Plate Increase=1.25
Uniform Loads (plf)
Vert: 1-7=-74
Trapezoidal Loads (plf)
Vert: 7=0(F=37, B=37)-to-4=-183(F=-55, B=-55), 2=-2(F=9, B=9)-to-5=-49(F=-15, B=-15)



Julius Lee PE No.34869
MiTek USA, Inc. FL Cert 6634
6904 Parke East Blvd. Tampa FL 33610
Date:

June 29,2020

WARNING - Verify design parameters and READ NOTES ON THIS AND INCLUDED MITEK REFERENCE PAGE MII-7473 rev. 10/03/2015 BEFORE USE.
Design valid for use only with MiTek® connectors. This design is based only upon parameters shown, and is for an individual building component, not a truss system. Before use, the building designer must verify the applicability of design parameters and properly incorporate this design into the overall building design. Bracing indicated is to prevent buckling of individual truss web and/or chord members only. Additional temporary and permanent bracing is always required for stability and to prevent collapse with possible personal injury and property damage. For general guidance regarding the fabrication, storage, delivery, erection and bracing of trusses and truss systems, see ANSI/TPI1 Quality Criteria, DSB-89 and BCSI Building Component Safety Information available from Truss Plate Institute, 2670 Crain Highway, Suite 203 Waldorf, MD 20601



6904 Parke East Blvd.
Tampa, FL 36610

202869

Job	Truss	Truss Type	Qty	Ply	CHEAVES CONST.
85-20	J1	JACK	12	1	T20589018
					Job Reference (optional)

Manatee lumber, BRADENTON FL. 8.130 s Mar 11 2018 MiTek Industries, Inc. Mon Jun 29 09:49:28 2020 Page 1
ID:U7NZd4T9PbvFlPkYGJkq_HzAJWi-5WxYE5LcUvWSJwIzQQV0aHi1XR_SuXcCWvEnl0z1So5

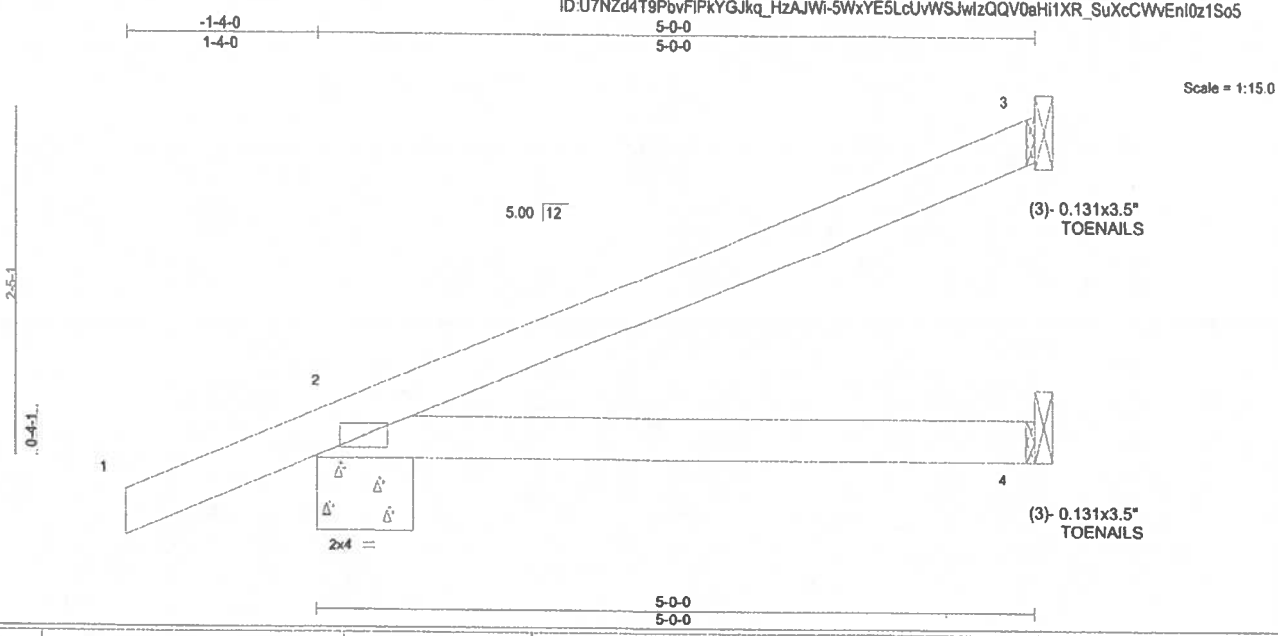

LOADING (psf)		SPACING-	2-0-0	CSI.		DEFL.	in	(loc)	l/defl	L/d	PLATES	GRIP
TCLL	20.0	Plate Grip DOL	1.25	TC	0.35	Vert(LL)	-0.03	2-4	>999	240	MT20	244/190
TCDL	17.0	Lumber DOL	1.25	BC	0.26	Vert(CT)	-0.05	2-4	>999	180		
BCLL	0.0 *	Rep Stress Incr	YES	WB	0.00	Horz(CT)	-0.00	3	n/a	n/a		
BCDL	10.0	Code FBC2017/TPI2014		Matrix-P							Weight: 18 lb	FT = 0%

LUMBER-
TOP CHORD 2x4 SP No.2
BOT CHORD 2x4 SP No.2

BRACING-
TOP CHORD Structural wood sheathing directly applied or 5-0-0 oc purlins.
BOT CHORD Rigid ceiling directly applied or 10-0-0 oc bracing.

REACTIONS. (lb/size) 3=148/Mechanical, 2=362/0-8-0, 4=46/Mechanical
Max Horz 2=92(LC 10)
Max Uplift 3=-64(LC 10), 2=-130(LC 10)
Max Grav 3=148(LC 1), 2=362(LC 1), 4=92(LC 3)

FORCES. (lb) - Max. Comp./Max. Ten. - All forces 250 (lb) or less except when shown.

NOTES-
1) Wind: ASCE 7-10; Vult=150mph (3-second gust) Vasd=116mph; TCDL=2.0psf; BCDL=2.0psf; h=14ft; B=45ft; L=24ft; eave=4ft; Cat. II; Exp B; Encl., GCpi=0.18; MWFRS (directional) and C-C Exterior(2) zone;C-C for members and forces & MWFRS for reactions shown; Lumber DOL=1.60 plate grip DOL=1.60
2) This truss has been designed for a 10.0 psf bottom chord live load nonconcurrent with any other live loads.
3) * This truss has been designed for a live load of 20.0psf on the bottom chord in all areas where a rectangle 3-6-0 tall by 2-0-0 wide will fit between the bottom chord and any other members.
4) Refer to girder(s) for truss to truss connections.
5) Provide mechanical connection (by others) of truss to bearing plate capable of withstanding 64 lb uplift at joint 3 and 130 lb uplift at joint 2.



Julius Lee PE No.34869
MiTek USA, Inc. FL Cert 6634
6904 Parke East Blvd. Tampa FL 33610
Date:

June 29,2020

WARNING - Verify design parameters and READ NOTES ON THIS AND INCLUDED MITEK REFERENCE PAGE MII-7473 rev. 10/03/2015 BEFORE USE.
Design valid for use only with MiTek® connectors. This design is based only upon parameters shown, and is for an individual building component, not a truss system. Before use, the building designer must verify the applicability of design parameters and properly incorporate this design into the overall building design. Bracing indicated is to prevent buckling of individual truss web and/or chord members only. Additional temporary and permanent bracing is always required for stability and to prevent collapse with possible personal injury and property damage. For general guidance regarding the fabrication, storage, delivery, erection and bracing of trusses and truss systems, see *ANSI/TPI1 Quality Criteria, DSB-89 and BCSI Building Component Safety Information* available from Truss Plate Institute, 2670 Crain Highway, Suite 203 Waldorf, MD 20601

MiTek
6904 Parke East Blvd.
Tampa, FL 33610

202869

Job	Truss	Truss Type	Qty	Ply	CHEAVES CONST. T20589019
85-20	J2	JACK	12	1	Job Reference (optional)

Manatee lumber, BRADENTON FL. 8.130 s Mar 11 2018 MiTek Industries, Inc. Mon Jun 29 09:49:28 2020 Page 1
ID:U7NZd4T9PbvFlPkYGJkq_HzAJWi-5WxYE5LcUvWSJwIzQQV0aHl3jR1LuXcCWvEnl0z1So5

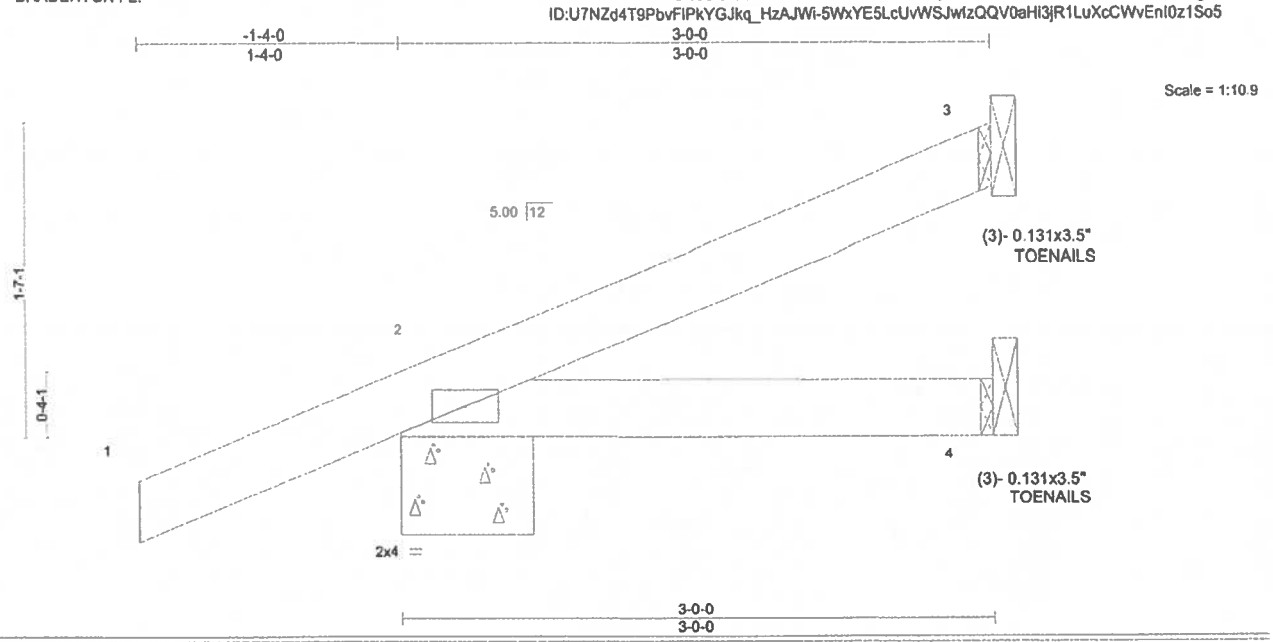

LOADING (psf)		SPACING-	2-0-0	CSI.		DEFL.	in	(loc)	l/defl	L/d	PLATES	GRIP
TCLL	20.0	Plate Grip DOL	1.25	TC	0.21	Vert(LL)	-0.00	2-4	>999	240	MT20	244/190
TCDL	17.0	Lumber DOL	1.25	BC	0.08	Vert(CT)	-0.01	2-4	>999	180		
BCLL	0.0 *	Rep Stress Incr	YES	WB	0.00	Horz(CT)	-0.00	3	n/a	n/a		
BCDL	10.0	Code FBC2017/TPI2014		Matrix-P							Weight: 12 lb	FT = 0%

LUMBER-
TOP CHORD 2x4 SP No.2
BOT CHORD 2x4 SP No.2

BRACING-
TOP CHORD Structural wood sheathing directly applied or 3-0-0 oc purlins.
BOT CHORD Rigid ceiling directly applied or 10-0-0 oc bracing.

REACTIONS. (lb/size) 3=57/Mechanical, 2=285/0-8-0, 4=26/Mechanical
Max Horz 2=66(LC 10)
Max Uplift 3=-24(LC 7), 2=-123(LC 10)
Max Grav 3=58(LC 15), 2=285(LC 1), 4=52(LC 3)

FORCES. (lb) - Max. Comp./Max. Ten. - All forces 250 (lb) or less except when shown.

NOTES-
1) Wind: ASCE 7-10; Vult=150mph (3-second gust) Vasd=116mph; TCDL=2.0psf; BCDL=2.0psf; h=14ft; B=45ft; L=24ft; eave=4ft; Cat. II; Exp B; Encl., GCpi=0.18; MWFRS (directional) and C-C Exterior(2) zone;C-C for members and forces & MWFRS for reactions shown; Lumber DOL=1.60 plate grip DOL=1.60
2) This truss has been designed for a 10.0 psf bottom chord live load nonconcurrent with any other live loads.
3) * This truss has been designed for a live load of 20.0psf on the bottom chord in all areas where a rectangle 3-6-0 tall by 2-0-0 wide will fit between the bottom chord and any other members.
4) Refer to girder(s) for truss to truss connections.
5) Provide mechanical connection (by others) of truss to bearing plate capable of withstanding 24 lb uplift at joint 3 and 123 lb uplift at joint 2.



Julius Lee PE No.34869
MiTek USA, Inc. FL Cert 6634
6904 Parke East Blvd. Tampa FL 33610
Date:

June 29,2020

WARNING - Verify design parameters and READ NOTES ON THIS AND INCLUDED MITEK REFERENCE PAGE MII-7473 rev. 10/03/2015 BEFORE USE.
Design valid for use only with MiTek® connectors. This design is based only upon parameters shown, and is for an individual building component, not a truss system. Before use, the building designer must verify the applicability of design parameters and properly incorporate this design into the overall building design. Bracing indicated is to prevent buckling of individual truss web and/or chord members only. Additional temporary and permanent bracing is always required for stability and to prevent collapse with possible personal injury and property damage. For general guidance regarding the fabrication, storage, delivery, erection and bracing of trusses and truss systems, see ANSI/TPI1 Quality Criteria, DSB-89 and BCSI Building Component Safety Information available from Truss Plate Institute, 2670 Crain Highway, Suite 203 Waldorf, MD 20601

MiTek
6904 Parke East Blvd.
Tampa, FL 33610

202869

Job	Truss	Truss Type	Qty	Ply	CHEAVES CONST.	T20589020
85-20	J3	JACK	12	1	Job Reference (optional)	

Manatee lumber, BRADENTON FL. 8.130 s Mar 11 2018 MiTek Industries, Inc. Mon Jun 29 09:49:29 2020 Page 1
ID:U7NZd4T9PbvFIPkYGJkq_HzAJWi-ZiVxRRMEFCeJx3t9_80F6VFFUrNdd_sMkZ_LqSz1So4

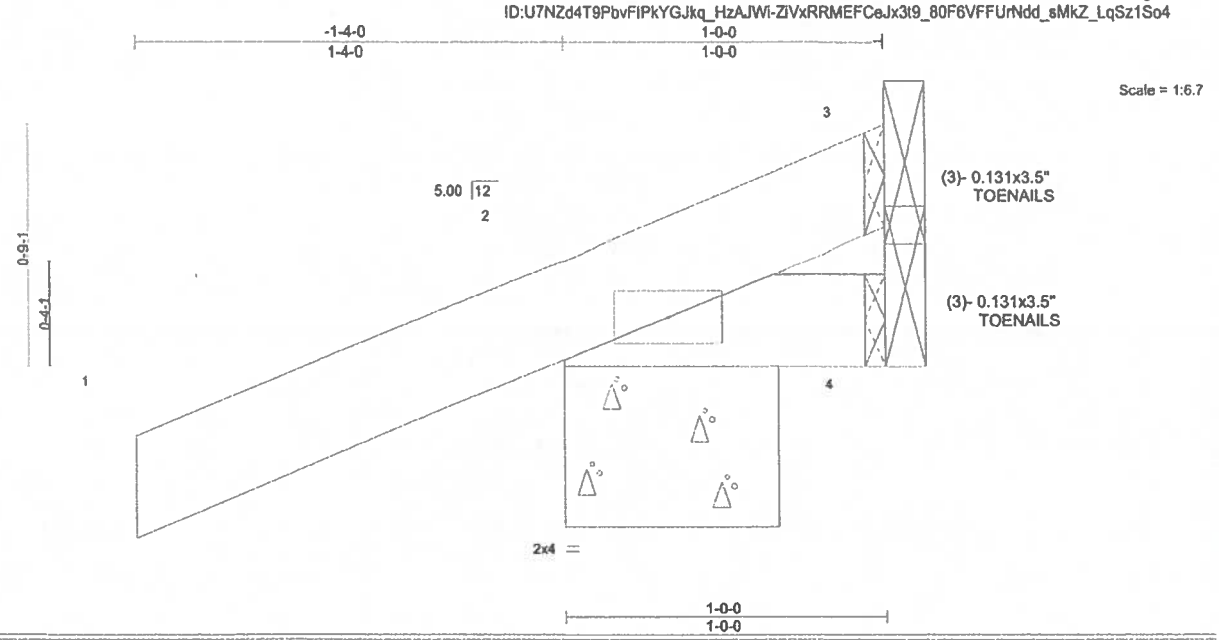

LOADING (psf)		SPACING-	2-0-0	CSI.		DEFL.	in	(loc)	l/defl	L/d	PLATES	GRIP
TCLL	20.0	Plate Grip DOL	1.25	TC	0.15	Vert(LL)	-0.00	2	>999	240	MT20	244/190
TCDL	17.0	Lumber DOL	1.25	BC	0.01	Vert(CT)	-0.00	2	>999	180		
BCLL	0.0 *	Rep Stress Incr	YES	WB	0.00	Horz(CT)	-0.00	3	n/a	n/a		
BCDL	10.0	Code FBC2017/TPI2014		Matrix-P							Weight: 5 lb	FT = 0%

LUMBER-
TOP CHORD 2x4 SP No.2
BOT CHORD 2x4 SP No.2

BRACING-
TOP CHORD Structural wood sheathing directly applied or 1-0-0 oc purlins.
BOT CHORD Rigid ceiling directly applied or 10-0-0 oc bracing.

REACTIONS. (lb/size) 3=-45/Mechanical, 2=226/0-8-0, 4=9/Mechanical
Max Horz 2=40(LC 10)
Max Uplift 3=-45(LC 1), 2=-125(LC 10)
Max Grav 3=39(LC 10), 2=226(LC 1), 4=18(LC 3)

FORCES. (lb) - Max. Comp./Max. Ten. - All forces 250 (lb) or less except when shown.

NOTES-
1) Wind: ASCE 7-10; Vult=150mph (3-second gust) Vasd=116mph; TCDL=2.0psf; BCDL=2.0psf; h=14ft; B=45ft; L=24ft; eave=4ft; Cat. II; Exp B; Encl., GCpi=0.18; MWFRS (directional) and C-C Exterior(2) zone;C-C for members and forces & MWFRS for reactions shown; Lumber DOL=1.60 plate grip DOL=1.60
2) This truss has been designed for a 10.0 psf bottom chord live load nonconcurrent with any other live loads.
3) * This truss has been designed for a live load of 20.0psf on the bottom chord in all areas where a rectangle 3-6-0 tall by 2-0-0 wide will fit between the bottom chord and any other members.
4) Refer to girder(s) for truss to truss connections.
5) Provide mechanical connection (by others) of truss to bearing plate capable of withstanding 45 lb uplift at joint 3 and 125 lb uplift at joint 2.



Julius Lee PE No.34869
MiTek USA, Inc. FL Cert 6634
6904 Parke East Blvd. Tampa FL 33610
Date:
June 29,2020

WARNING - Verify design parameters and READ NOTES ON THIS AND INCLUDED MITEK REFERENCE PAGE MII-7473 rev. 10/03/2015 BEFORE USE.
Design valid for use only with MiTek® connectors. This design is based only upon parameters shown, and is for an individual building component, not a truss system. Before use, the building designer must verify the applicability of design parameters and properly incorporate this design into the overall building design. Bracing indicated is to prevent buckling of individual truss web and/or chord members only. Additional temporary and permanent bracing is always required for stability and to prevent collapse with possible personal injury and property damage. For general guidance regarding the fabrication, storage, delivery, erection and bracing of trusses and truss systems, see *ANSI/TPI1 Quality Criteria, DSB-89 and BCSI Building Component Safety Information* available from Truss Plate Institute, 2670 Crain Highway, Suite 203 Waldorf, MD 20601



6904 Parke East Blvd.
Tampa, FL 36610

202869

Job	Truss	Truss Type	Qty	Ply	CHEAVES CONST. T20589021
85-20	T1	SCISSORS	13	1	Job Reference (optional)

Manatee lumber, BRADENTON FL 8.130 s Mar 11 2018 MiTek Industries, Inc. Mon Jun 29 09:49:31 2020 Page 1
ID:U7NZd4T9PbvFlPkYGJkq_HzAJWi-V5dhs6NUnqu1AN0Y6Y2jBwKPufiG5fIfCtTSuLz1So2

1-4-0	7-5-6	13-6-8	20-0-0	26-5-8	32-6-10	40-0-0	41-4-0
1-4-0	7-5-6	6-1-2	6-5-8	6-5-8	6-1-2	7-5-6	1-4-0

Scale = 1:69.5

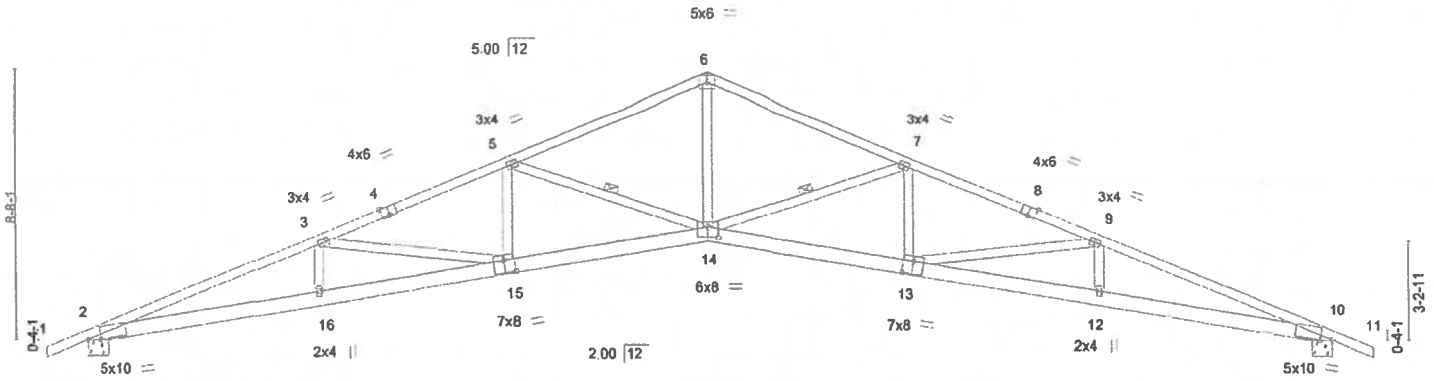

7-5-6	13-6-8	20-0-0	26-5-8	32-6-10	40-0-0
7-5-6	6-1-2	6-5-8	6-5-8	6-1-2	7-5-6

Plate Offsets (X,Y)-- [2:0-4-15,0-0-14], [4:0-3-0,Edge], [8:0-3-0,Edge], [10:0-4-15,0-0-14], [13:0-4-0,0-5-0], [14:0-4-0,0-4-0], [15:0-4-0,0-5-0]

LOADING (psf)		SPACING-	2-0-0	CSI.		DEFL.	in	(loc)	l/defl	L/d	PLATES	GRIP
TCLL	20.0	Plate Grip DOL	1.25	TC	0.92	Vert(LL)	-0.46	14	>999	240	MT20	244/190
TCDL	17.0	Lumber DOL	1.25	BC	0.83	Vert(CT)	-1.08	13-14	>436	180		
BCLL	0.0 *	Rep Stress Incr	YES	WB	0.96	Horz(CT)	0.57	10	n/a	n/a		
BCDL	10.0	Code FBC2017/TPI2014		Matrix-R							Weight: 222 lb	FT = 0%

LUMBER-
TOP CHORD 2x4 SP No.2 *Except*
1-4,8-11: 2x4 SP M 30
BOT CHORD 2x6 SP No.2 *Except*
2-15,10-13: 2x6 SP No.1
WEBS 2x4 SP No.3

BRACING-
TOP CHORD Structural wood sheathing directly applied.
BOT CHORD Rigid ceiling directly applied or 4-8-13 oc bracing.
WEBS 1 Row at midpt 5-14, 7-14

REACTIONS. (lb/size) 2=1972/0-8-0, 10=1972/0-8-0
Max Horz 2=-202(LC 8)
Max Uplift 2=-545(LC 10), 10=-545(LC 10)

FORCES. (lb) - Max. Comp./Max. Ten. - All forces 250 (lb) or less except when shown.
TOP CHORD 2-3=-6189/3049, 3-5=-5228/2610, 5-6=-4025/2010, 6-7=-4025/2010, 7-9=-5228/2610, 9-10=-6189/3049
BOT CHORD 2-16=-2686/5659, 15-16=-2690/5664, 14-15=-2136/4823, 13-14=-2136/4823, 12-13=-2690/5664, 10-12=-2686/5659
WEBS 6-14=-1189/2531, 5-15=-164/478, 7-13=-164/478, 3-15=-875/549, 5-14=-1218/745, 7-14=-1218/745, 9-13=-875/549

NOTES-
1) Unbalanced roof live loads have been considered for this design.
2) Wind: ASCE 7-10; Vult=150mph (3-second gust) Vasd=116mph; TCDL=2.0psf; BCDL=2.0psf; h=14ft; B=45ft; L=40ft; eave=5ft; Cat. II; Exp B; Encl., GCpi=0.18; MWFRS (directional) and C-C Exterior(2) zone;C-C for members and forces & MWFRS for reactions shown; Lumber DOL=1.60 plate grip DOL=1.60
3) This truss has been designed for a 10.0 psf bottom chord live load nonconcurrent with any other live loads.
4) * This truss has been designed for a live load of 20.0psf on the bottom chord in all areas where a rectangle 3-6-0 tall by 2-0-0 wide will fit between the bottom chord and any other members.
5) Bearing at joint(s) 2, 10 considers parallel to grain value using ANSI/TPI 1 angle to grain formula. Building designer should verify capacity of bearing surface.
6) Provide mechanical connection (by others) of truss to bearing plate capable of withstanding 545 lb uplift at joint 2 and 545 lb uplift at joint 10.

JULIUS LEE LICENSE No 34869 STATE OF FLORIDA PROFESSIONAL ENGINEER

Julius Lee PE No.34869
MiTek USA, Inc. FL Cert 6634
6904 Parke East Blvd. Tampa FL 33610
Date:
June 29,2020

WARNING - Verify design parameters and READ NOTES ON THIS AND INCLUDED MITEK REFERENCE PAGE MII-7473 rev. 10/03/2015 BEFORE USE.
Design valid for use only with MiTek® connectors. This design is based only upon parameters shown, and is for an individual building component, not a truss system. Before use, the building designer must verify the applicability of design parameters and properly incorporate this design into the overall building design. Bracing indicated is to prevent buckling of individual truss web and/or chord members only. Additional temporary and permanent bracing is always required for stability and to prevent collapse with possible personal injury and property damage. For general guidance regarding the fabrication, storage, delivery, erection and bracing of trusses and truss systems, see *ANSI/TPI1 Quality Criteria, DSB-89 and BCSI Building Component Safety Information* available from Truss Plate Institute, 2670 Crain Highway, Suite 203 Waldorf, MD 20601

MiTek
6904 Parke East Blvd.
Tampa, FL 36610

202869

Job	Truss	Truss Type	Qty	Ply	CHEAVES CONST.
85-20	T2	SCISSORS	2	1	T20589022
					Job Reference (optional)

Manatee lumber, BRADENTON FL. 8.130 s Mar 11 2018 MiTek Industries, Inc. Mon Jun 29 09:49:40 2020 Page 1
ID:U7NZd4T9PbvFIPkYGJkq_HzAJWi-kqf5lBU8fb0lmCG7xjq3pCygHvFim0zGn8QiJz1Snv

1-4-0	7-5-6	13-6-8	19-0-0	21-0-0	26-5-8	32-6-10	40-0-0	41-4-0
1-4-0	7-5-6	6-1-2	5-5-8	2-0-0	5-5-8	6-1-2	7-5-6	1-4-0

Scale = 1:71.8

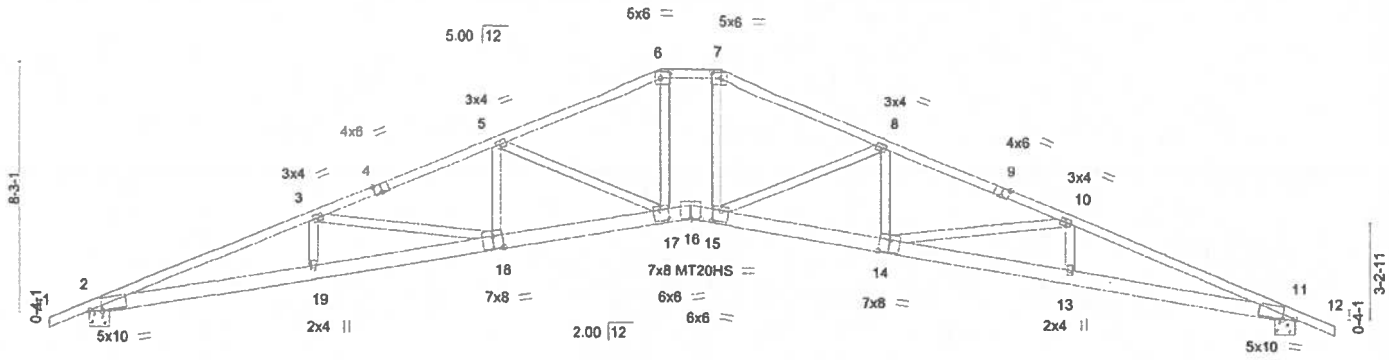

7-5-6	13-6-8	19-0-0	21-0-0	26-5-8	32-6-10	40-0-0
7-5-6	6-1-2	5-5-8	1-0-0 1-0-0	5-5-8	6-1-2	7-5-6

Plate Offsets (X,Y)— [2:0-4-15,0-0-14], [4:0-3-0,Edge], [6:0-3-12,0-2-8], [7:0-3-12,0-2-8], [9:0-3-0,Edge], [11:0-4-15,0-0-14], [14:0-4-0,0-5-0], [15:0-3-0,0-4-8], [16:0-4-0,0-0-0], [17:0-3-0,0-4-8], [18:0-4-0,0-5-0]

LOADING (psf)		SPACING-	2-0-0	CSI.		DEFL.	in	(loc)	l/defl	L/d	PLATES	GRIP
TCLL	20.0	Plate Grip DOL	1.25	TC	0.92	Vert(LL)	-0.45	16	>999	240	MT20	244/190
TCDL	17.0	Lumber DOL	1.25	BC	0.96	Vert(CT)	-1.07	16	>441	180	MT20HS	187/143
BCLL	0.0 *	Rep Stress Incr	YES	WB	0.81	Horz(CT)	0.56	11	n/a	n/a		
BCDL	10.0	Code	FBC2017/TPI2014	Matrix-R							Weight: 226 lb	FT = 0%

LUMBER-
TOP CHORD 2x4 SP No.2 *Except* 1-4,9-12: 2x4 SP M 30
BOT CHORD 2x6 SP No.2 *Except* 2-18,11-14: 2x6 SP No.1
WEBS 2x4 SP No.3

BRACING-
TOP CHORD Structural wood sheathing directly applied.
BOT CHORD Rigid ceiling directly applied or 2-2-0 oc bracing.

REACTIONS. (lb/size) 2=1972/0-8-0, 11=1972/0-8-0
Max Horz 2=-193(LC 8)
Max Uplift 2=-545(LC 10), 11=-545(LC 10)

FORCES. (lb) - Max. Comp./Max. Ten. - All forces 250 (lb) or less except when shown.
TOP CHORD 2-3=-6194/3035, 3-5=-5217/2588, 5-6=-4166/2074, 7-8=-4166/2074, 8-10=-5217/2588, 10-11=-6194/3035, 6-7=-3807/1989
BOT CHORD 2-19=-2674/5664, 18-19=-2677/5668, 17-18=-2116/4812, 16-17=-1469/3756, 15-16=-1469/3755, 14-15=-2116/4812, 13-14=-2677/5668, 11-13=-2674/5664
WEBS 5-18=-159/455, 8-14=-159/455, 3-18=-875/558, 10-14=-878/558, 6-17=-617/1313, 7-15=-617/1313, 5-17=-1129/672, 8-15=-1129/672

NOTES-
1) Unbalanced roof live loads have been considered for this design.
2) Wind: ASCE 7-10; Vult=150mph (3-second gust) Vasd=116mph; TCDL=2.0psf; BCDL=2.0psf; h=14ft; B=45ft; L=40ft; eave=5ft; Cat. II; Exp B; Encl., GCpi=0.18; MWFRS (directional) and C-C Exterior(2) zone;C-C for members and forces & MWFRS for reactions shown; Lumber DOL=1.60 plate grip DOL=1.60
3) Provide adequate drainage to prevent water ponding.
4) All plates are MT20 plates unless otherwise indicated.
5) This truss has been designed for a 10.0 psf bottom chord live load nonconcurrent with any other live loads.
6) * This truss has been designed for a live load of 20.0psf on the bottom chord in all areas where a rectangle 3-6-0 tall by 2-0-0 wide will fit between the bottom chord and any other members.
7) Bearing at joint(s) 2, 11 considers parallel to grain value using ANSI/TPI 1 angle to grain formula. Building designer should verify capacity of bearing surface.
8) Provide mechanical connection (by others) of truss to bearing plate capable of withstanding 545 lb uplift at joint 2 and 545 lb uplift at joint 11.



Julius Lee PE No.34869
MiTek USA, Inc. FL Cert 6634
6904 Parke East Blvd. Tampa FL 33610
Date:
June 29,2020

WARNING - Verify design parameters and READ NOTES ON THIS AND INCLUDED MITEK REFERENCE PAGE MII-7473 rev. 10/03/2015 BEFORE USE.
Design valid for use only with MiTek® connectors. This design is based only upon parameters shown, and is for an individual building component, not a truss system. Before use, the building designer must verify the applicability of design parameters and properly incorporate this design into the overall building design. Bracing indicated is to prevent buckling of individual truss web and/or chord members only. Additional temporary and permanent bracing is always required for stability and to prevent collapse with possible personal injury and property damage. For general guidance regarding the fabrication, storage, delivery, erection and bracing of trusses and truss systems, see *ANSI/TPI1 Quality Criteria, DSB-89 and BCSI Building Component Safety Information* available from Truss Plate Institute, 2670 Crain Highway, Suite 203 Waldorf, MD 20601

MiTek
6904 Parke East Blvd.
Tampa, FL 36610

Job	Truss	Truss Type	Qty	Ply	CHEAVES CONST.
85-20	T3	SCISSORS	1	1	T20589023
					Job Reference (optional)

Manatee lumber, BRADENTON FL. 8.130 s Mar 11 2018 MiTek Industries, Inc. Mon Jun 29 09:49:41 2020 Page 1
ID:U7NZd4T9PbvFlPkYGJkq_HzAJWi-C0DTzXVmQu8cNvnThfE3b1k6ehlfRFQ7VRuzEmz1Snu

1-4-0	7-5-6	13-6-8	17-0-0	23-0-0	26-5-8	32-6-10	40-0-0	41-4-0
1-4-0	7-5-6	6-1-2	3-5-8	6-0-0	3-5-8	6-1-2	7-5-6	1-4-0

Scale = 1:71.8

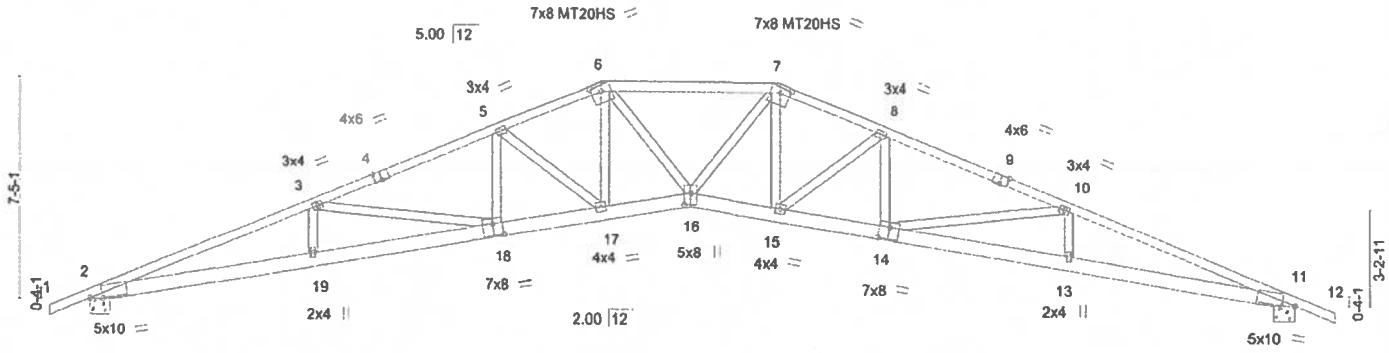

7-5-6	13-6-8	17-0-0	20-0-0	23-0-0	26-5-8	32-6-10	40-0-0
7-5-6	6-1-2	3-5-8	3-0-0	3-0-0	3-5-8	6-1-2	7-5-6

Plate Offsets (X,Y)-- [2:0-4-15,0-0-14], [4:0-3-0,Edge], [6:0-4-0,0-2-2], [7:0-4-0,0-2-2], [9:0-3-0,Edge], [11:0-4-15,0-0-14], [14:0-4-0,0-5-0], [16:0-4-12,0-2-8], [18:0-4-0,0-5-0]

LOADING (psf)		SPACING-	2-0-0	CSI.		DEFL.	in	(loc)	l/defl	L/d	PLATES	GRIP
TCLL	20.0	Plate Grip DOL	1.25	TC	0.97	Vert(LL)	-0.47	16	>999	240	MT20	244/190
TCDL	17.0	Lumber DOL	1.25	BC	0.83	Vert(CT)	-1.10	16	>431	180	MT20HS	187/143
BCLL	0.0 *	Rep Stress Incr	YES	WB	0.67	Horz(CT)	0.57	11	n/a	n/a		
BCDL	10.0	Code FBC2017/TPI2014		Matrix-R							Weight: 232 lb	FT = 0%

LUMBER-
TOP CHORD 2x4 SP No.2 *Except*
1-4,9-12: 2x4 SP M 30
BOT CHORD 2x6 SP No.2 *Except*
2-18,11-14: 2x6 SP No.1
WEBS 2x4 SP No.3

BRACING-
TOP CHORD Structural wood sheathing directly applied.
BOT CHORD Rigid ceiling directly applied or 4-9-3 oc bracing.

REACTIONS. (lb/size) 2=1972/0-8-0, 11=1972/0-8-0
Max Horz 2=-174(LC 8)
Max Uplift 2=-545(LC 10), 11=-545(LC 10)

FORCES. (lb) - Max. Comp./Max. Ten. - All forces 250 (lb) or less except when shown.
TOP CHORD 2-3=-6201/3007, 3-5=-5204/2545, 5-6=-4500/2244, 7-8=-4500/2244, 8-10=-5204/2545, 10-11=-6201/3007, 6-7=-4663/2322
BOT CHORD 2-19=-2649/5671, 18-19=-2653/5676, 17-18=-2070/4787, 16-17=-1689/4187, 15-16=-1689/4187, 14-15=-2070/4787, 13-14=-2653/5676, 11-13=-2649/5671
WEBS 5-18=-177/436, 8-14=-177/436, 3-18=-911/577, 10-14=-912/577, 6-17=-374/691, 7-15=-374/690, 5-17=-790/491, 8-15=-791/491, 6-16=-325/887, 7-16=-325/887

NOTES-
1) Unbalanced roof live loads have been considered for this design.
2) Wind: ASCE 7-10; Vult=150mph (3-second gust) Vasd=116mph; TCDL=2.0psf; BCDL=2.0psf; h=14ft; B=45ft; L=40ft; eave=5ft; Cat. II; Exp B; Encl., GCpi=0.18; MWFRS (directional) and C-C Exterior(2) zone;C-C for members and forces & MWFRS for reactions shown; Lumber DOL=1.60 plate grip DOL=1.60
3) Provide adequate drainage to prevent water ponding.
4) All plates are MT20 plates unless otherwise indicated.
5) This truss has been designed for a 10.0 psf bottom chord live load nonconcurrent with any other live loads.
6) * This truss has been designed for a live load of 20.0psf on the bottom chord in all areas where a rectangle 3-6-0 tall by 2-0-0 wide will fit between the bottom chord and any other members.
7) Bearing at joint(s) 2, 11 considers parallel to grain value using ANSI/TPI 1 angle to grain formula. Building designer should verify capacity of bearing surface.
8) Provide mechanical connection (by others) of truss to bearing plate capable of withstanding 545 lb uplift at joint 2 and 545 lb uplift at joint 11.



Julius Lee PE No.34869
MiTek USA, Inc. FL Cert 6634
6904 Parke East Blvd. Tampa FL 33610
Date:

June 29,2020

WARNING - Verify design parameters and READ NOTES ON THIS AND INCLUDED MITEK REFERENCE PAGE MII-7473 rev. 10/03/2015 BEFORE USE.
Design valid for use only with MiTek® connectors. This design is based only upon parameters shown, and is for an individual building component, not a truss system. Before use, the building designer must verify the applicability of design parameters and properly incorporate this design into the overall building design. Bracing indicated is to prevent buckling of individual truss web and/or chord members only. Additional temporary and permanent bracing is always required for stability and to prevent collapse with possible personal injury and property damage. For general guidance regarding the fabrication, storage, delivery, erection and bracing of trusses and truss systems, see *ANSI/TPI1 Quality Criteria, DSB-89 and BCSI Building Component Safety Information* available from Truss Plate Institute, 2670 Crain Highway, Suite 203 Waldorf, MD 20601



6904 Parke East Blvd.
Tampa, FL 36610

202869

Job	Truss	Truss Type	Qty	Ply	CHEAVES CONST.	T20589024
85-20	T4	SCISSORS	1	1	Job Reference (optional)	

Manatee lumber, BRADENTON FL. 8.130 s Mar 11 2018 MiTek Industries, Inc. Mon Jun 29 09:49:43 2020 Page 1
ID:U7NZd4T9PbvFlPkYGJkq_HzAJWi-9OLDNDX0yWPKcDxrp4GXhSqThUxlv9uQyIN4Jez1Sns

-1-4-0	7-5-6	13-6-8	15-0-0	20-0-0	25-0-0	26-5-8	32-6-10	40-0-0	41-4-0
1-4-0	7-5-6	6-1-2	1-5-8	5-0-0	5-0-0	1-5-8	6-1-2	7-5-6	1-4-0

Scale = 1:71.8

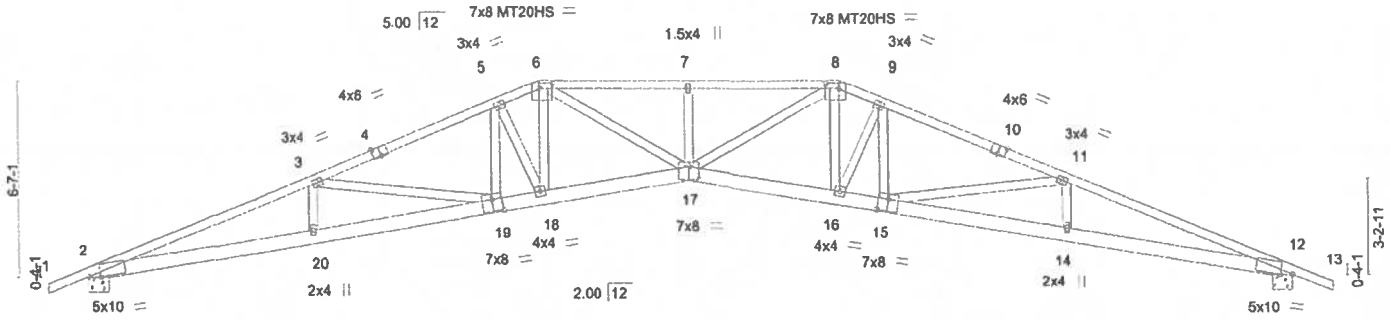

7-5-6	13-6-8	15-0-0	20-0-0	25-0-0	26-5-8	32-6-10	40-0-0
7-5-6	6-1-2	1-5-8	5-0-0	5-0-0	1-5-8	6-1-2	7-5-6

Plate Offsets (X,Y)— [2:0-4-11,0-0-14], [4:0-3-0,Edge], [6:0-5-4,0-2-4], [8:0-5-4,0-2-4], [10:0-3-0,Edge], [12:0-4-11,0-0-14], [15:0-4-0,0-5-0], [17:0-4-0,0-5-4], [19:0-4-0,0-5-0]

LOADING (psf)		SPACING-	2-0-0	CSI.		DEFL.	in	(loc)	l/defl	L/d	PLATES	GRIP
TCLL	20.0	Plate Grip DOL	1.25	TC	0.93	Vert(LL)	-0.55	17	>866	240	MT20	244/190
TCDL	17.0	Lumber DOL	1.25	BC	0.91	Vert(CT)	-1.28	17	>368	180	MT20HS	187/143
BCLL	0.0 *	Rep Stress Incr	YES	WB	0.67	Horz(CT)	0.63	12	n/a	n/a		
BCDL	10.0	Code FBC2017/TPI2014		Matrix-R							Weight: 233 lb	FT = 0%

LUMBER-
TOP CHORD 2x4 SP No.2 *Except*
1-4,10-13: 2x4 SP M 30
BOT CHORD 2x6 SP No.2 *Except*
2-19,12-15: 2x6 SP No.1
WEBS 2x4 SP No.3

BRACING-
TOP CHORD Structural wood sheathing directly applied.
BOT CHORD Rigid ceiling directly applied or 2-2-0 oc bracing.

REACTIONS. (lb/size) 2=1972/0-8-0, 12=1972/0-8-0
Max Horz 2=155(LC 9)
Max Uplift 2=-545(LC 10), 12=-545(LC 10)

FORCES. (lb) - Max. Comp./Max. Ten. - All forces 250 (lb) or less except when shown.
TOP CHORD 2-3=-6200/2975, 3-5=-5204/2512, 5-6=-4876/2433, 8-9=-4876/2433, 9-11=-5204/2512, 11-12=-6200/2975, 6-7=-6008/2905, 7-8=-6008/2905
BOT CHORD 2-20=-2619/5671, 19-20=-2622/5675, 18-19=-2046/4799, 17-18=-1880/4560, 16-17=-1880/4560, 15-16=-2046/4799, 14-15=-2622/5675, 12-14=-2619/5671
WEBS 3-20=0/250, 5-19=-140/333, 9-15=-140/333, 11-14=0/250, 3-19=-904/578, 11-15=-911/578, 6-18=-426/746, 8-16=-426/745, 5-18=-568/372, 9-16=-570/372, 7-17=-348/238, 6-17=-746/1755, 8-17=-746/1755

NOTES-
1) Unbalanced roof live loads have been considered for this design.
2) Wind: ASCE 7-10; Vult=150mph (3-second gust) Vasd=116mph; TCDL=2.0psf; BCDL=2.0psf; h=14ft; B=45ft; L=40ft; eave=5ft; Cat. II; Exp B; Encl., GCpi=0.18; MWFRS (directional) and C-C Exterior(2) zone;C-C for members and forces & MWFRS for reactions shown; Lumber DOL=1.60 plate grip DOL=1.60
3) Provide adequate drainage to prevent water ponding.
4) All plates are MT20 plates unless otherwise indicated.
5) This truss has been designed for a 10.0 psf bottom chord live load nonconcurrent with any other live loads.
6) * This truss has been designed for a live load of 20.0psf on the bottom chord in all areas where a rectangle 3-6-0 tall by 2-0-0 wide will fit between the bottom chord and any other members.
7) Bearing at joint(s) 2, 12 considers parallel to grain value using ANSI/TPI 1 angle to grain formula. Building designer should verify capacity of bearing surface.
8) Provide mechanical connection (by others) of truss to bearing plate capable of withstanding 545 lb uplift at joint 2 and 545 lb uplift at joint 12.



Julius Lee PE No.34869
MiTek USA, Inc. FL Cert 6634
6904 Parke East Blvd. Tampa FL 33610
Date:
June 29,2020

WARNING - Verify design parameters and READ NOTES ON THIS AND INCLUDED MITEK REFERENCE PAGE MII-7473 rev. 10/03/2015 BEFORE USE.
Design valid for use only with MiTek® connectors. This design is based only upon parameters shown, and is for an individual building component, not a truss system. Before use, the building designer must verify the applicability of design parameters and properly incorporate this design into the overall building design. Bracing indicated is to prevent buckling of individual truss web and/or chord members only. Additional temporary and permanent bracing is always required for stability and to prevent collapse with possible personal injury and property damage. For general guidance regarding the fabrication, storage, delivery, erection and bracing of trusses and truss systems, see *ANSI/TPI1 Quality Criteria, DSB-89 and BCSI Building Component Safety Information* available from Truss Plate Institute, 2670 Crain Highway, Suite 203 Waldorf, MD 20601



6904 Parke East Blvd.
Tampa, FL 36610

Job	Truss	Truss Type	Qty	Ply	CHEAVES CONST. T20589025
85-20	T5	HIP	1	1	Job Reference (optional)

Manatee lumber, BRADENTON FL. 8.130 s Mar 11 2018 MiTek Industries, Inc. Mon Jun 29 09:49:45 2020 Page 1
ID:U7NZd4T9PbvFIPkYGJkq_HzAJWi-5nT_ovYGU7f2sX5EwVI?mtvn9IcpN1XiQ3sBNXz1Snq

1-4-0	7-5-6	13-0-0	16-6-0	20-0-0	23-6-0	27-0-0	32-6-10	40-0-0	41-4-0
1-4-0	7-5-6	5-6-10	3-6-0	3-6-0	3-6-0	3-6-0	5-6-10	7-5-6	1-4-0

Scale = 1:70.6

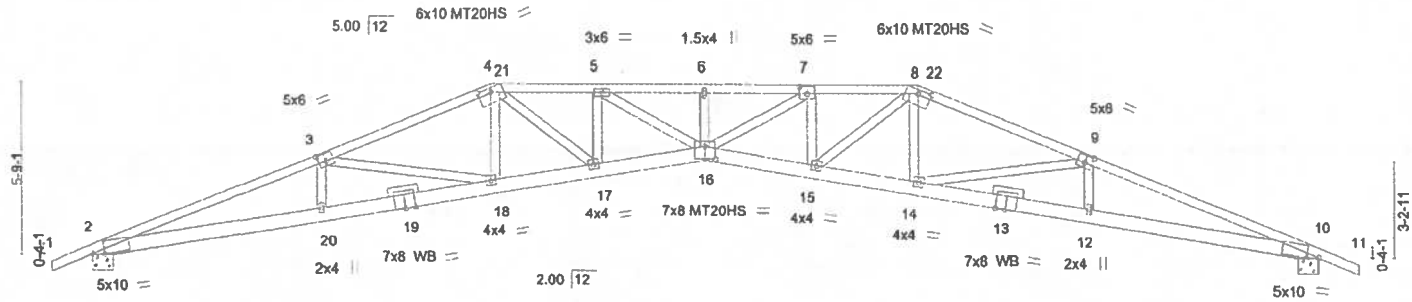

7-5-6	13-0-0	16-6-0	20-0-0	23-6-0	27-0-0	32-6-10	40-0-0
7-5-6	5-6-10	3-6-0	3-6-0	3-6-0	3-6-0	5-6-10	7-5-6

Plate Offsets (X,Y)-- [2:0-4-11,0-0-14], [3:0-3-0,0-3-0], [4:0-5-0,0-1-11], [7:0-3-0,0-3-0], [8:0-5-0,0-1-11], [9:0-3-0,0-3-0], [10:0-4-11,0-0-14], [16:0-4-0,0-5-0]

LOADING (psf)		SPACING-	2-0-0	CSI.		DEFL.	in	(loc)	l/defl	L/d	PLATES	GRIP
TCLL	20.0	Plate Grip DOL	1.25	TC	1.00	Vert(LL)	-0.70	16	>674	240	MT20	244/190
TCDL	17.0	Lumber DOL	1.25	BC	1.00	Vert(CT)	-1.65	16	>286	180	MT20HS	187/143
BCLL	0.0 *	Rep Stress Incr	YES	WB	0.79	Horz(CT)	0.76	10	n/a	n/a		
BCDL	10.0	Code FBC2017/TPI2014		Matrix-R							Weight: 227 lb	FT = 0%

LUMBER-
TOP CHORD 2x4 SP No.2 *Except*
1-3,9-11: 2x4 SP M 30
BOT CHORD 2x6 SP No.1
WEBS 2x4 SP No.3
OTHERS 2x4 SP No.3

BRACING-
TOP CHORD Structural wood sheathing directly applied.
BOT CHORD Rigid ceiling directly applied or 1-4-12 oc bracing.

REACTIONS. (lb/size) 2=1972/0-8-0, 10=1972/0-8-0
Max Horz 2=136(LC 9)
Max Uplift 2=-545(LC 10), 10=-545(LC 10)

FORCES. (lb) - Max. Comp./Max. Ten. - All forces 250 (lb) or less except when shown.
TOP CHORD 2-3=-6174/2925, 3-4=-5281/2523, 4-5=-6403/3084, 5-6=-8162/3842, 6-7=-8162/3842, 7-8=-6395/3080, 8-9=-5282/2524, 9-10=-6174/2924
BOT CHORD 2-20=-2569/5643, 18-20=-2576/5646, 17-18=-2061/4883, 16-17=-2755/6475, 15-16=-2783/8539, 14-15=-2062/4883, 12-14=-2576/5646, 10-12=-2569/5643
WEBS 3-18=-801/518, 4-18=-188/431, 4-17=-879/2014, 5-17=-1322/614, 5-16=-890/2066, 7-16=-867/2016, 7-15=-1331/618, 8-15=-872/2002, 8-14=-189/433, 9-14=-806/517

NOTES-
1) Unbalanced roof live loads have been considered for this design.
2) Wind: ASCE 7-10; Vult=150mph (3-second gust) Vasd=116mph; TCDL=2.0psf; BCDL=2.0psf; h=14ft; B=45ft; L=40ft; eave=5ft; Cat. II; Exp B; Encl., GCpi=0.18; MWFRS (directional) and C-C Exterior(2) zone;C-C for members and forces & MWFRS for reactions shown; Lumber DOL=1.60 plate grip DOL=1.60
3) Provide adequate drainage to prevent water ponding.
4) All plates are MT20 plates unless otherwise indicated.
5) This truss has been designed for a 10.0 psf bottom chord live load nonconcurrent with any other live loads.
6) * This truss has been designed for a live load of 20.0psf on the bottom chord in all areas where a rectangle 3-6-0 tall by 2-0-0 wide will fit between the bottom chord and any other members.
7) Bearing at joint(s) 2, 10 considers parallel to grain value using ANSI/TPI 1 angle to grain formula. Building designer should verify capacity of bearing surface.
8) Provide mechanical connection (by others) of truss to bearing plate capable of withstanding 545 lb uplift at joint 2 and 545 lb uplift at joint 10.

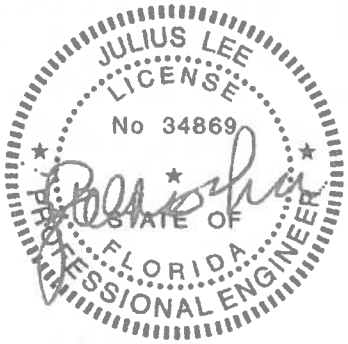

Julius Lee PE No.34869
MiTek USA, Inc. FL Cert 6634
6904 Parke East Blvd. Tampa FL 33610
Date:
June 29,2020

WARNING - Verify design parameters and READ NOTES ON THIS AND INCLUDED MITEK REFERENCE PAGE MII-7473 rev. 10/03/2015 BEFORE USE.
Design valid for use only with MiTek® connectors. This design is based only upon parameters shown, and is for an individual building component, not a truss system. Before use, the building designer must verify the applicability of design parameters and properly incorporate this design into the overall building design. Bracing indicated is to prevent buckling of individual truss web and/or chord members only. Additional temporary and permanent bracing is always required for stability and to prevent collapse with possible personal injury and property damage. For general guidance regarding the fabrication, storage, delivery, erection and bracing of trusses and truss systems, see *ANSI/TPI1 Quality Criteria, DSB-89 and BCSI Building Component Safety Information* available from Truss Plate Institute, 2670 Crain Highway, Suite 203 Waldorf, MD 20601

MiTek
6904 Parke East Blvd.
Tampa, FL 36610

202869

Job	Truss	Truss Type	Qty	Ply	CHEAVES CONST. T20589026
85-20	T6	HIP	1	1	Job Reference (optional)

Manatee lumber, BRADENTON FL. 8.130 s Mar 11 2018 MiTek Industries, Inc. Mon Jun 29 09:49:46 2020 Page 1
ID:U7NZd4T9PbvFlPkYGJkq_HzAJWi-Zz1M0FZuFRnuUhgQUCpEI4SzuiyJ6TGsejbkvzz1Snp

1-4-0	5-4-13	9-4-0	11-0-0	17-0-9	22-11-7	29-0-0	33-11-7	40-0-0	41-4-0
1-4-0	5-4-13	3-11-3	1-8-0	6-0-9	5-10-13	6-0-9	4-11-7	6-0-9	1-4-0

Scale = 1:73.2

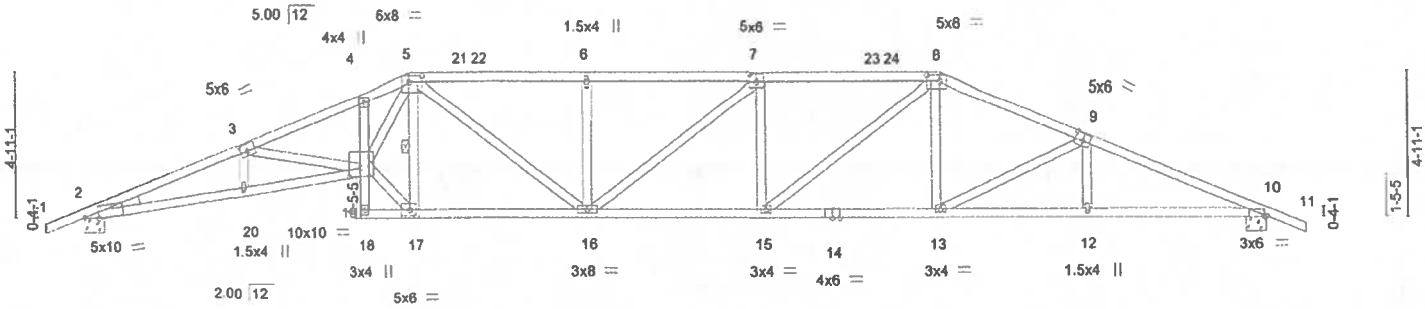

5-4-13	9-4-0	11-0-0	17-0-9	22-11-7	29-0-0	33-11-7	40-0-0
5-4-13	3-11-3	1-8-0	6-0-9	5-10-13	6-0-9	4-11-7	6-0-9

Plate Offsets (X,Y)-- [2:0-5-12,Edge], [3:0-3-0,0-3-0], [5:0-5-4,0-2-4], [7:0-3-0,0-3-0], [8:0-5-4,0-2-4], [9:0-3-0,0-3-0], [10:0-0-10,Edge], [17:0-2-8,0-2-8], [19:0-4-8,0-3-8]

LOADING (psf)		SPACING-	2-0-0	CSI.		DEFL.	in	(loc)	l/defl	L/d	PLATES	GRIP
TCLL	20.0	Plate Grip DOL	1.25	TC	0.94	Vert(LL)	-0.40	16	>999	240	MT20	244/190
TCDL	17.0	Lumber DOL	1.25	BC	0.99	Vert(CT)	-0.94	15-16	>500	180		
BCLL	0.0 *	Rep Stress Incr	YES	WB	0.88	Horz(CT)	0.40	10	n/a	n/a		
BCDL	10.0	Code FBC2017/TPI2014		Matrix-R							Weight: 218 lb	FT = 0%

LUMBER-
TOP CHORD 2x4 SP No.2 *Except*
1-3: 2x4 SP No.2D
BOT CHORD 2x4 SP No.2 *Except*
2-19: 2x4 SP M 30, 4-18: 2x4 SP No.3
WEBS 2x4 SP No.3 *Except*
17-19,5-19: 2x4 SP No.2
WEDGE
Left: 2x4 SP No.3

BRACING-
TOP CHORD Structural wood sheathing directly applied.
BOT CHORD Rigid ceiling directly applied or 2-2-0 oc bracing.
WEBS 1 Row at midpt 5-17

REACTIONS. (lb/size) 2=1972/0-8-0, 10=1972/0-8-0
Max Horz 2=-117(LC 8)
Max Uplift 2=-545(LC 10), 10=-545(LC 10)

FORCES. (lb) - Max. Comp./Max. Ten. - All forces 250 (lb) or less except when shown.
TOP CHORD 2-3=-6009/2832, 3-4=-5529/2649, 4-5=-5230/2580, 5-6=-3864/2000, 6-7=-3864/2000, 7-8=-3865/1999, 8-9=-3457/1734, 9-10=-3978/1910
BOT CHORD 2-20=-2485/5458, 19-20=-2486/5446, 17-18=-133/268, 16-17=-1351/3151, 15-16=-1698/3878, 13-15=-1349/3140, 12-13=-1617/3549, 10-12=-1616/3553
WEBS 3-19=-365/245, 17-19=-1660/3919, 5-19=-1732/3850, 5-17=-2505/1128, 5-16=-426/994, 6-16=-426/283, 7-15=-497/284, 8-15=-428/1015, 8-13=-124/399, 9-13=-495/306

NOTES-
1) Unbalanced roof live loads have been considered for this design.
2) Wind: ASCE 7-10; Vult=150mph (3-second gust) Vasd=116mph; TCDL=2.0psf; BCDL=2.0psf; h=14ft; B=45ft; L=40ft; eave=5ft; Cat. II; Exp B; Encl., GCpi=0.18; MWFRS (directional) and C-C Exterior(2) zone;C-C for members and forces & MWFRS for reactions shown; Lumber DOL=1.60 plate grip DOL=1.60
3) Provide adequate drainage to prevent water ponding.
4) This truss has been designed for a 10.0 psf bottom chord live load nonconcurrent with any other live loads.
5) * This truss has been designed for a live load of 20.0psf on the bottom chord in all areas where a rectangle 3-6-0 tall by 2-0-0 wide will fit between the bottom chord and any other members.
6) Bearing at joint(s) 2 considers parallel to grain value using ANSI/TPI 1 angle to grain formula. Building designer should verify capacity of bearing surface.
7) Provide mechanical connection (by others) of truss to bearing plate capable of withstanding 545 lb uplift at joint 2 and 545 lb uplift at joint 10.



Julius Lee PE No.34869
MiTek USA, Inc. FL Cert 6634
6904 Parke East Blvd. Tampa FL 33610
Date:
June 29,2020

WARNING - Verify design parameters and READ NOTES ON THIS AND INCLUDED MITEK REFERENCE PAGE MII-7473 rev. 10/03/2015 BEFORE USE.
Design valid for use only with MiTek® connectors. This design is based only upon parameters shown, and is for an individual building component, not a truss system. Before use, the building designer must verify the applicability of design parameters and properly incorporate this design into the overall building design. Bracing indicated is to prevent buckling of individual truss web and/or chord members only. Additional temporary and permanent bracing is always required for stability and to prevent collapse with possible personal injury and property damage. For general guidance regarding the fabrication, storage, delivery, erection and bracing of trusses and truss systems, see *ANSI/TPI1 Quality Criteria, DSB-89 and BCSI Building Component Safety Information* available from Truss Plate Institute, 2670 Crain Highway, Suite 203 Waldorf, MD 20601

MiTek
6904 Parke East Blvd.
Tampa, FL 33610

Job	Truss	Truss Type	Qty	Ply	CHEAVES CONST. T20589027
85-20	T7	HIP	1	1	Job Reference (optional)

Manatee lumber, BRADENTON FL. 8.130 s Mar 11 2018 MiTek Industries, Inc. Mon Jun 29 09:49:47 2020 Page 1
ID:U7NZd4T9PbvFlPkYGJkq_HzAJWi-1AakDaaX0kvl5qFc2wLTrl_9Z5J7ru2?tNLISPz1Sno

-1-4-0	4-11-3	9-0-0	9-4-0	14-6-0	20-0-0	25-6-0	31-0-0	35-0-13	40-0-0	41-4-0
1-4-0	4-11-3	4-0-13	0-4-0	5-2-0	5-6-0	5-6-0	5-6-0	4-0-13	4-11-3	1-4-0

Scale = 1:71.9

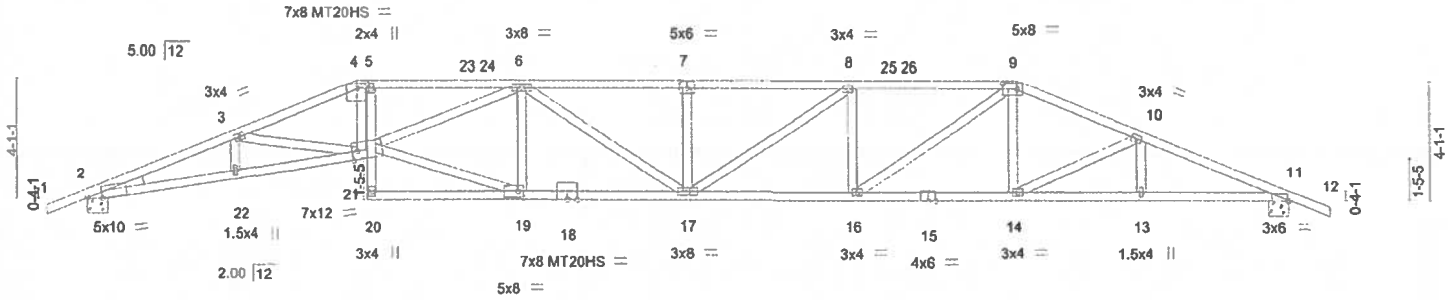

4-11-3	9-0-0	9-4-0	14-6-0	20-0-0	25-6-0	31-0-0	35-0-13	40-0-0
4-11-3	4-0-13	0-4-0	5-2-0	5-6-0	5-6-0	5-6-0	4-0-13	4-11-3

Plate Offsets (X,Y)-- [2:0-5-12,Edge], [4:0-4-0,0-1-13], [7:0-3-0,0-3-0], [9:0-5-12,0-2-8], [11:0-0-10,Edge], [19:0-2-4,0-2-12], [21:0-2-0,Edge]

LOADING (psf)		SPACING-	2-0-0	CSI.		DEFL.	in	(loc)	l/defl	L/d	PLATES	GRIP
TCLL	20.0	Plate Grip DOL	1.25	TC	0.88	Vert(LL)	-0.46	17-19	>999	240	MT20	244/190
TCDL	17.0	Lumber DOL	1.25	BC	0.95	Vert(CT)	-1.08	17-19	>437	180	MT20HS	187/143
BCLL	0.0 *	Rep Stress Incr	YES	WB	0.98	Horz(CT)	0.38	11	n/a	n/a		
BCDL	10.0	Code FBC2017/TPI2014		Matrix-R							Weight: 217 lb	FT = 0%

LUMBER-
TOP CHORD 2x4 SP No.2
BOT CHORD 2x4 SP No.2D *Except*
2-21: 2x4 SP M 30, 5-20: 2x4 SP No.3
WEBS 2x4 SP No.3 *Except*
19-21: 2x4 SP No.2
WEDGE
Left: 2x4 SP No.3

BRACING-
TOP CHORD Structural wood sheathing directly applied or 1-8-5 oc purlins.
BOT CHORD Rigid ceiling directly applied or 2-2-0 oc bracing.

REACTIONS. (lb/size) 2=1969/0-8-0, 11=1971/0-8-0
Max Horz 2=-99(LC 8)
Max Uplift 2=-545(LC 10), 11=-545(LC 10)

FORCES. (lb) - Max. Comp./Max. Ten. - All forces 250 (lb) or less except when shown.
TOP CHORD 2-3=-5933/2776, 3-4=-5629/2673, 4-5=-5385/2613, 5-6=-5316/2591, 6-7=-4805/2413, 7-8=-4805/2413, 8-9=-4436/2237, 9-10=-3639/1795, 10-11=-3981/1893
BOT CHORD 2-22=-2431/5379, 21-22=-2435/5381, 19-20=-106/265, 17-19=-1975/4434, 16-17=-1974/4436, 14-16=-1446/3322, 13-14=-1608/3557, 11-13=-1608/3557
WEBS 4-21=-721/1652, 19-21=-1941/4328, 6-21=-387/968, 6-19=-1083/556, 6-17=-213/516, 7-17=-398/263, 8-17=-214/511, 8-16=-706/390, 9-16=-641/1429, 9-14=-76/309, 10-14=-302/184

NOTES-
1) Unbalanced roof live loads have been considered for this design.
2) Wind: ASCE 7-10; Vult=150mph (3-second gust) Vasd=116mph; TCDL=2.0psf; BCDL=2.0psf; h=14ft; B=45ft; L=40ft; eave=5ft; Cat. II; Exp B; Encl., GCpi=0.18; MWFRS (directional) and C-C Exterior(2) zone;C-C for members and forces & MWFRS for reactions shown; Lumber DOL=1.60 plate grip DOL=1.60
3) Provide adequate drainage to prevent water ponding.
4) All plates are MT20 plates unless otherwise indicated.
5) This truss has been designed for a 10.0 psf bottom chord live load nonconcurrent with any other live loads.
6) * This truss has been designed for a live load of 20.0psf on the bottom chord in all areas where a rectangle 3-6-0 tall by 2-0-0 wide will fit between the bottom chord and any other members.
7) Bearing at joint(s) 2 considers parallel to grain value using ANSI/TPI 1 angle to grain formula. Building designer should verify capacity of bearing surface.
8) Provide mechanical connection (by others) of truss to bearing plate capable of withstanding 545 lb uplift at joint 2 and 545 lb uplift at joint 11.



Julius Lee PE No.34869
MiTek USA, Inc. FL Cert 6634
6904 Parke East Blvd. Tampa FL 33610
Date: June 29,2020

WARNING - Verify design parameters and READ NOTES ON THIS AND INCLUDED MITEK REFERENCE PAGE MII-7473 rev. 10/03/2015 BEFORE USE
Design valid for use only with MiTek® connectors. This design is based only upon parameters shown, and is for an individual building component, not a truss system. Before use, the building designer must verify the applicability of design parameters and properly incorporate this design into the overall building design. Bracing indicated is to prevent buckling of individual truss web and/or chord members only. Additional temporary and permanent bracing is always required for stability and to prevent collapse with possible personal injury and property damage. For general guidance regarding the fabrication, storage, delivery, erection and bracing of trusses and truss systems, see *ANSI/TPI Quality Criteria, DSB-89 and BCSI Building Component Safety Information* available from Truss Plate Institute, 2670 Crain Highway, Suite 203 Waldorf, MD 20601

MiTek
6904 Parke East Blvd.
Tampa, FL 36610

202869

Job	Truss	Truss Type	Qty	Ply	CHEAVES CONST.
85-20	T8	HIP	1	1	T20589028
					Job Reference (optional)

Manatee lumber, BRADENTON FL. 8.130 s Mar 11 2018 MiTek Industries, Inc. Mon Jun 29 09:49:48 2020 Page 1
ID:U7NZd4T9PbvFlPkYGJkq_HzAJWi-VM86Rwb9m21cj_qpbdslOVXNkVd?aQA9614r_sz1Snn

1-4-0	7-5-6	13-6-8	17-0-0	23-0-0	26-5-8	32-6-10	40-0-0	41-4-0
1-4-0	7-5-6	6-1-2	3-5-8	6-0-0	3-5-8	6-1-2	7-5-6	1-4-0

Scale = 1:70.6

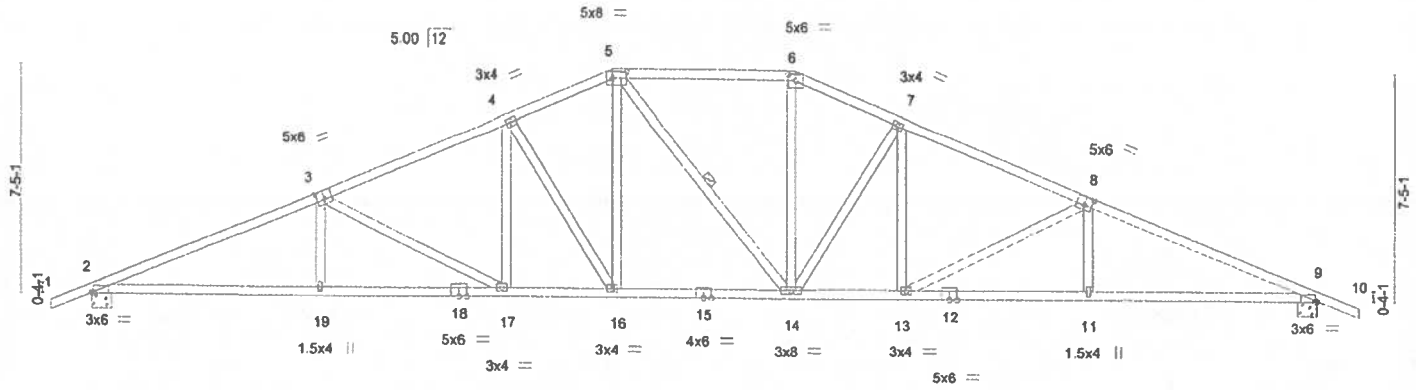

7-5-6	13-6-8	17-0-0	23-0-0	26-5-8	32-6-10	40-0-0
7-5-6	6-1-2	3-5-8	6-0-0	3-5-8	6-1-2	7-5-6

Plate Offsets (X,Y)— [2:0-0-10,Edge], [3:0-3-0,0-3-4], [5:0-5-12,0-2-8], [6:0-3-0,0-2-4], [8:0-3-0,0-3-4], [9:0-0-10,Edge]

LOADING (psf)		SPACING-	2-0-0	CSI.		DEFL.	in	(loc)	l/defl	L/d	PLATES	GRIP
TCLL	20.0	Plate Grip DOL	1.25	TC	0.66	Vert(LL)	-0.21	16	>999	240	MT20	244/190
TCDL	17.0	Lumber DOL	1.25	BC	0.97	Vert(CT)	-0.51	14-16	>931	180		
BCLL	0.0 *	Rep Stress Incr	YES	WB	0.67	Horz(CT)	0.19	9	n/a	n/a		
BCDL	10.0	Code FBC2017/TPI2014		Matrix-R							Weight: 224 lb	FT = 0%

LUMBER-
TOP CHORD 2x4 SP No.2 *Except*
1-3,8-10: 2x4 SP M 30
BOT CHORD 2x4 SP No.2 *Except*
2-18,9-12: 2x4 SP No.2D
WEBS 2x4 SP No.3

BRACING-
TOP CHORD Structural wood sheathing directly applied or 2-8-5 oc purlins.
BOT CHORD Rigid ceiling directly applied or 2-2-0 oc bracing.
WEBS 1 Row at midpt 5-14

REACTIONS. (lb/size) 2=1972/0-8-0, 9=1972/0-8-0
Max Horz 2=-174(LC 8)
Max Uplift 2=-545(LC 10), 9=-545(LC 10)

FORCES. (lb) - Max. Comp./Max. Ten. - All forces 250 (lb) or less except when shown.
TOP CHORD 2-3=-3944/1952, 3-4=-3199/1679, 4-5=-2748/1536, 5-6=-2511/1464, 6-7=-2749/1536, 7-8=-3198/1679, 8-9=-3944/1952
BOT CHORD 2-19=-1645/3517, 17-19=-1645/3513, 16-17=-1239/2863, 14-16=-1012/2509, 13-14=-1239/2862, 11-13=-1646/3513, 9-11=-1645/3518
WEBS 3-19=0/300, 3-17=-747/460, 4-17=-194/443, 4-16=-688/438, 5-16=-352/754, 6-14=-352/675, 7-14=-686/436, 7-13=-194/441, 8-13=-747/460, 8-11=0/301

NOTES-
1) Unbalanced roof live loads have been considered for this design.
2) Wind: ASCE 7-10; Vult=150mph (3-second gust) Vasd=116mph; TCDL=2.0psf; BCDL=2.0psf; h=14ft; B=45ft; L=40ft; eave=5ft; Cat. II; Exp B; Encl., GCpi=0.18; MWFRS (directional) and C-C Exterior(2) zone;C-C for members and forces & MWFRS for reactions shown; Lumber DOL=1.60 plate grip DOL=1.60
3) Provide adequate drainage to prevent water ponding.
4) This truss has been designed for a 10.0 psf bottom chord live load nonconcurrent with any other live loads.
5) * This truss has been designed for a live load of 20.0psf on the bottom chord in all areas where a rectangle 3-6-0 tall by 2-0-0 wide will fit between the bottom chord and any other members, with BCDL = 10.0psf.
6) Provide mechanical connection (by others) of truss to bearing plate capable of withstanding 545 lb uplift at joint 2 and 545 lb uplift at joint 9.



Julius Lee PE No.34869
MiTek USA, Inc. FL Cert 6634
6904 Parke East Blvd. Tampa FL 33610
Date:
June 29,2020

WARNING - Verify design parameters and READ NOTES ON THIS AND INCLUDED MITEK REFERENCE PAGE MII-7473 rev. 10/03/2015 BEFORE USE.
Design valid for use only with MiTek® connectors. This design is based only upon parameters shown, and is for an individual building component, not a truss system. Before use, the building designer must verify the applicability of design parameters and properly incorporate this design into the overall building design. Bracing indicated is to prevent buckling of individual truss web and/or chord members only. Additional temporary and permanent bracing is always required for stability and to prevent collapse with possible personal injury and property damage. For general guidance regarding the fabrication, storage, delivery, erection and bracing of trusses and truss systems, see *ANSI/TPI1 Quality Criteria, DSB-89 and BCSI Building Component Safety Information* available from Truss Plate Institute, 2670 Crain Highway, Suite 203 Waldorf, MD 20601

MiTek
6904 Parke East Blvd.
Tampa, FL 33610

202869

Job	Truss	Truss Type	Qty	Ply	CHEAVES CONST.	T20589029
85-20	T9	HIP	1	1	Job Reference (optional)	

Manatee lumber, BRADENTON FL. 8.130 s Mar 11 2018 MiTek Industries, Inc. Mon Jun 29 09:49:50 2020 Page 1
ID:U7NZd4T9PbvFIPkYGJkq_HzAJWi-SIGtrccPIfHKylzBj2uATwcibJMv2QSSZKZy2kz1Snl

1-4-0	8-0-9	15-0-0	20-0-0	25-0-0	31-11-7	40-0-0	41-4-0
1-4-0	8-0-9	6-11-7	5-0-0	5-0-0	6-11-7	8-0-9	1-4-0

Scale = 1:70.6

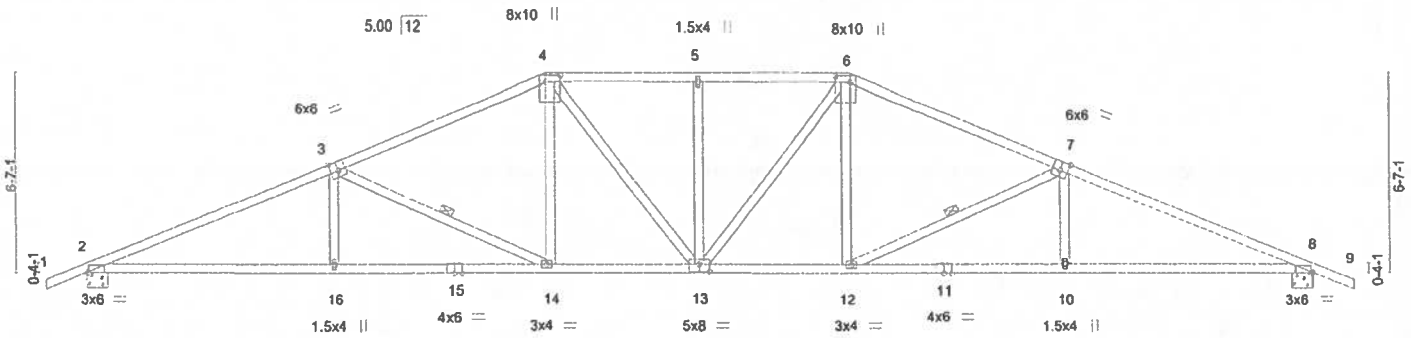

8-0-9	15-1-12	20-0-0	24-10-4	31-11-7	40-0-0
8-0-9	7-1-3	4-10-4	4-10-4	7-1-3	8-0-9

Plate Offsets (X,Y)-- [2:0-0-10,Edge], [3:0-3-0,Edge], [4:0-2-8,0-5-12], [6:0-2-8,0-5-12], [7:0-3-0,Edge], [8:0-0-10,Edge], [13:0-4-0,0-3-0]

LOADING (psf)		SPACING-	2-0-0	CSI.		DEFL.	in	(loc)	l/defl	L/d	PLATES	GRIP
TCLL	20.0	Plate Grip DOL	1.25	TC	0.76	Vert(LL)	-0.21	13	>999	240	MT20	244/190
TCDL	17.0	Lumber DOL	1.25	BC	0.82	Vert(CT)	-0.49	12-13	>955	180		
BCLL	0.0 *	Rep Stress Incr	YES	WB	0.30	Horz(CT)	0.19	8	n/a	n/a		
BCDL	10.0	Code FBC2017/TPI2014		Matrix-R							Weight: 208 lb	FT = 0%

LUMBER-
TOP CHORD 2x4 SP No.2 *Except*
1-3,7-9: 2x4 SP M 30
BOT CHORD 2x4 SP No.2 *Except*
2-15,8-11: 2x4 SP M 30
WEBS 2x4 SP No.3

BRACING-
TOP CHORD Structural wood sheathing directly applied or 2-4-15 oc purlins.
BOT CHORD Rigid ceiling directly applied or 4-8-7 oc bracing.
WEBS 1 Row at midpt 3-14, 7-12

REACTIONS. (lb/size) 2=1972/0-8-0, 8=1972/0-8-0
Max Horz 2=-155(LC 8)
Max Uplift 2=-545(LC 10), 8=-545(LC 10)

FORCES. (lb) - Max. Comp./Max. Ten. - All forces 250 (lb) or less except when shown.
TOP CHORD 2-3=-3916/1917, 3-4=-3054/1586, 4-5=-2892/1608, 5-6=-2892/1608, 6-7=-3054/1586, 7-8=-3916/1917
BOT CHORD 2-16=-1608/3487, 14-16=-1608/3482, 13-14=-1134/2732, 12-13=-1134/2732, 10-12=-1608/3482, 8-10=-1608/3487
WEBS 4-14=-207/535, 6-12=-207/535, 3-16=0/333, 5-13=-344/190, 7-10=0/333, 3-14=-863/533, 4-13=-111/421, 6-13=-111/421, 7-12=-864/533

NOTES-
1) Unbalanced roof live loads have been considered for this design.
2) Wind: ASCE 7-10; Vult=150mph (3-second gust) Vasd=116mph; TCDL=2.0psf; BCDL=2.0psf; h=14ft; B=45ft; L=40ft; eave=5ft; Cat. II; Exp B; Encl., GCpi=0.18; MWFRS (directional) and C-C Exterior(2) zone;C-C for members and forces & MWFRS for reactions shown; Lumber DOL=1.60 plate grip DOL=1.60
3) Provide adequate drainage to prevent water ponding.
4) This truss has been designed for a 10.0 psf bottom chord live load nonconcurrent with any other live loads.
5) * This truss has been designed for a live load of 20.0psf on the bottom chord in all areas where a rectangle 3-6-0 tall by 2-0-0 wide will fit between the bottom chord and any other members.
6) Provide mechanical connection (by others) of truss to bearing plate capable of withstanding 545 lb uplift at joint 2 and 545 lb uplift at joint 8.



Julius Lee PE No.34869
MiTek USA, Inc. FL Cert 6634
6904 Parke East Blvd. Tampa FL 33610
Date:

June 29,2020

WARNING - Verify design parameters and READ NOTES ON THIS AND INCLUDED MITEK REFERENCE PAGE MII-7473 rev. 10/03/2015 BEFORE USE.
Design valid for use only with MiTek® connectors. This design is based only upon parameters shown, and is for an individual building component, not a truss system. Before use, the building designer must verify the applicability of design parameters and properly incorporate this design into the overall building design. Bracing indicated is to prevent buckling of individual truss web and/or chord members only. Additional temporary and permanent bracing is always required for stability and to prevent collapse with possible personal injury and property damage. For general guidance regarding the fabrication, storage, delivery, erection and bracing of trusses and truss systems, see *ANSI/TPI1 Quality Criteria, DSB-89 and BCSI Building Component Safety Information* available from Truss Plate Institute, 2670 Crain Highway, Suite 203 Waldorf, MD 20601

MiTek
6904 Parke East Blvd.
Tampa, FL 38610

202869

Job	Truss	Truss Type	Qty	Ply	CHEAVES CONST. T20589030
85-20	T10	HIP	1	1	Job Reference (optional)

Manatee lumber, BRADENTON FL. 8.130 s Mar 11 2018 MiTek Industries, Inc. Mon Jun 29 09:49:32 2020 Page 1
ID:U7NZd4T9PbvFlPkYGJkq_HzAJWi-zHA34SO6Y70uoXbkfGZyk7sZr2BnqCHoQXC7Rnz1So1

1-4-0	6-11-2	13-0-0	20-0-0	27-0-0	33-0-14	40-0-0	41-4-0
1-4-0	6-11-2	6-0-14	7-0-0	7-0-0	6-0-14	6-11-2	1-4-0

Scale = 1:70.6

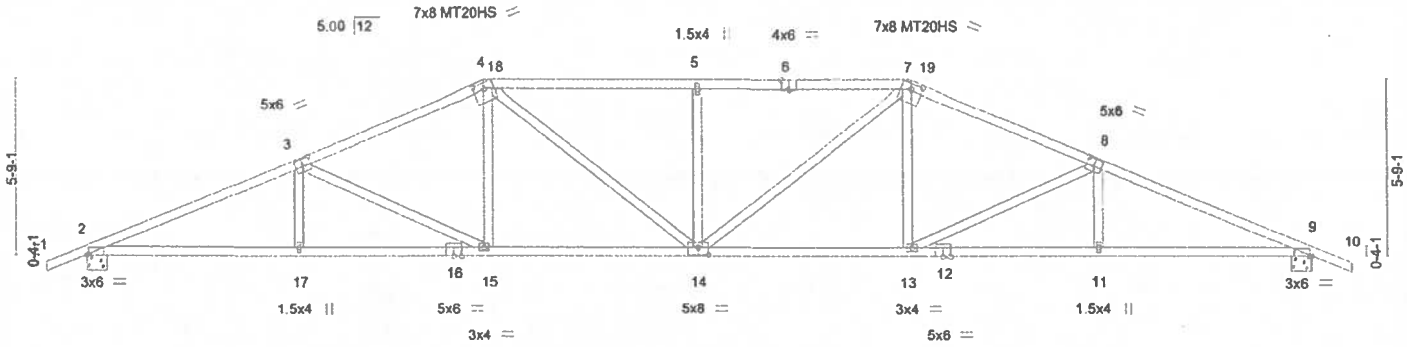

6-11-2	13-1-12	20-0-0	26-10-4	33-0-14	40-0-0
6-11-2	6-2-10	6-10-4	6-10-4	6-2-10	6-11-2

Plate Offsets (X,Y)-- [2:0-0-10,Edge], [3:0-3-0,0-3-0], [4:0-4-0,0-2-2], [6:0-3-0,Edge], [7:0-4-0,0-2-2], [8:0-3-0,0-3-0], [9:0-0-10,Edge], [14:0-4-0,0-3-0]

LOADING (psf)		SPACING-	2-0-0	CSI.		DEFL.	in	(loc)	l/defl	L/d	PLATES	GRIP
TCLL	20.0	Plate Grip DOL	1.25	TC	0.97	Vert(LL)	-0.24	14	>999	240	MT20	244/190
TCDL	17.0	Lumber DOL	1.25	BC	0.94	Vert(CT)	-0.58	14-15	>818	180	MT20HS	187/143
BCLL	0.0 *	Rep Stress Incr	YES	WB	0.60	Horz(CT)	0.20	9	n/a	n/a		
BCDL	10.0	Code FBC2017/TPI2014		Matrix-R							Weight: 202 lb	FT = 0%

LUMBER-
TOP CHORD 2x4 SP No.2 *Except*
1-3,8-10: 2x4 SP No.2D
BOT CHORD 2x4 SP No.2 *Except*
2-16,9-12: 2x4 SP No.2D
WEBS 2x4 SP No.3

BRACING-
TOP CHORD Structural wood sheathing directly applied.
BOT CHORD Rigid ceiling directly applied or 2-2-0 oc bracing.

REACTIONS. (lb/size) 2=1972/0-8-0, 9=1972/0-8-0
Max Horz 2=-136(LC 8)
Max Uplift 2=-545(LC 10), 9=-545(LC 10)

FORCES. (lb) - Max. Comp./Max. Ten. - All forces 250 (lb) or less except when shown.
TOP CHORD 2-3=-3958/1920, 3-4=-3270/1665, 4-5=-3378/1804, 5-7=-3378/1804, 7-8=-3270/1664, 8-9=-3959/1921
BOT CHORD 2-17=-1620/3532, 15-17=-1621/3528, 14-15=-1249/2952, 13-14=-1249/2951, 11-13=-1621/3528, 9-11=-1620/3532
WEBS 4-15=-158/486, 7-13=-158/487, 3-17=0/271, 5-14=-540/339, 8-11=0/271, 3-15=-673/417, 4-14=-251/687, 7-14=-251/688, 8-13=-675/418

NOTES-
1) Unbalanced roof live loads have been considered for this design.
2) Wind: ASCE 7-10; Vult=150mph (3-second gust) Vasd=116mph; TCDL=2.0psf; BCDL=2.0psf; h=14ft; B=45ft; L=40ft; eave=5ft; Cat. II; Exp B; Encl., GCpi=0.18; MWFRS (directional) and C-C Exterior(2) zone;C-C for members and forces & MWFRS for reactions shown; Lumber DOL=1.60 plate grip DOL=1.60
3) Provide adequate drainage to prevent water ponding.
4) All plates are MT20 plates unless otherwise indicated.
5) This truss has been designed for a 10.0 psf bottom chord live load nonconcurrent with any other live loads.
6) * This truss has been designed for a live load of 20.0psf on the bottom chord in all areas where a rectangle 3-6-0 tall by 2-0-0 wide will fit between the bottom chord and any other members.
7) Provide mechanical connection (by others) of truss to bearing plate capable of withstanding 545 lb uplift at joint 2 and 545 lb uplift at joint 9.



Julius Lee PE No.34869
MiTek USA, Inc. FL Cert 6634
6904 Parke East Blvd. Tampa FL 33610
Date:

June 29,2020

WARNING - Verify design parameters and READ NOTES ON THIS AND INCLUDED MITEK REFERENCE PAGE MII-7473 rev. 10/03/2015 BEFORE USE.
Design valid for use only with MiTek® connectors. This design is based only upon parameters shown, and is for an individual building component, not a truss system. Before use, the building designer must verify the applicability of design parameters and properly incorporate this design into the overall building design. Bracing indicated is to prevent buckling of individual truss web and/or chord members only. Additional temporary and permanent bracing is always required for stability and to prevent collapse with possible personal injury and property damage. For general guidance regarding the fabrication, storage, delivery, erection and bracing of trusses and truss systems, see *ANSI/TPI1 Quality Criteria, DSB-89 and BCSI Building Component Safety Information* available from Truss Plate Institute, 2670 Crain Highway, Suite 203 Waldorf, MD 20601



6904 Parke East Blvd.
Tampa, FL 33610

Job	Truss	Truss Type	Qty	Ply	CHEAVES CONST. T20589031
85-20	T11	HIP	1	1	Job Reference (optional)

Manatee lumber, BRADENTON FL. 8.130 s Mar 11 2018 MiTek Industries, Inc. Mon Jun 29 09:49:33 2020 Page 1
ID:U7NZd4T9PbvFlPkYGJkq_HzAJWl-RTkRHoPlJR8lQhAwDz5BHLPn6SWeZhlxfByYzDz1So0

-1-4-0	6-0-9	11-0-0	17-0-9	22-11-7	29-0-0	33-11-7	40-0-0	41-4-0
1-4-0	6-0-9	4-11-7	6-0-9	5-10-13	6-0-9	4-11-7	6-0-9	1-4-0

Scale = 1:70.6

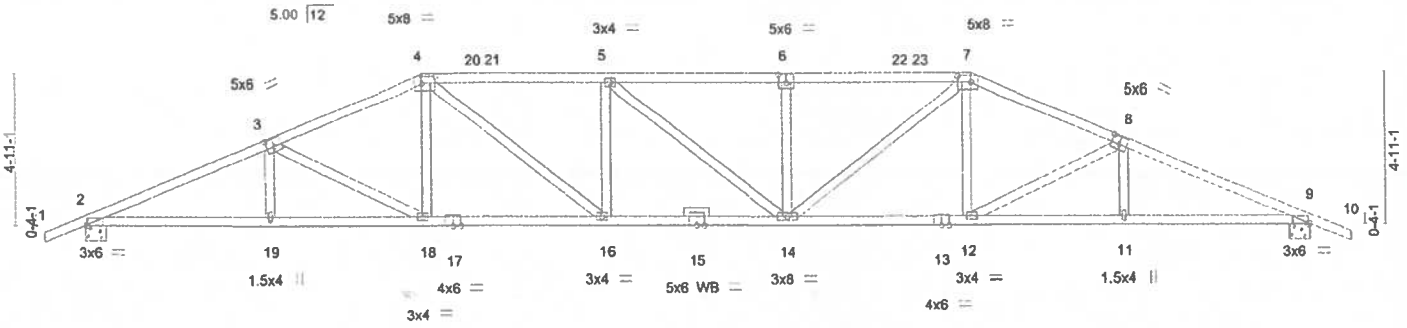

6-0-9	11-1-12	17-0-9	22-11-7	28-10-4	33-11-7	40-0-0
6-0-9	5-1-3	5-10-13	5-10-13	5-10-13	5-1-3	6-0-9

Plate Offsets (X,Y)-- [2:0-0-10,Edge], [3:0-3-0,0-3-0], [4:0-5-4,0-2-4], [6:0-3-0,0-3-0], [7:0-5-4,0-2-4], [8:0-3-0,0-3-0], [9:0-0-10,Edge]

LOADING (psf)		SPACING-	2-0-0	CSI.		DEFL.	in	(loc)	l/defl	L/d	PLATES	GRIP
TCLL	20.0	Plate Grip DOL	1.25	TC	0.81	Vert(LL)	-0.29	14-16	>999	240	MT20	244/190
TCDL	17.0	Lumber DOL	1.25	BC	0.96	Vert(CT)	-0.70	14-16	>670	180		
BCLL	0.0 *	Rep Stress Incr	YES	WB	0.46	Horz(CT)	0.22	9	n/a	n/a		
BCDL	10.0	Code FBC2017/TPI2014		Matrix-R							Weight: 208 lb	FT = 0%

LUMBER-
TOP CHORD 2x4 SP No.2
BOT CHORD 2x4 SP No.2
WEBS 2x4 SP No.3
OTHERS 2x4 SP No.3

BRACING-
TOP CHORD Structural wood sheathing directly applied or 2-2-0 oc purlins.
BOT CHORD Rigid ceiling directly applied or 2-2-0 oc bracing.

REACTIONS. (lb/size) 2=1972/0-8-0, 9=1972/0-8-0
Max Horz 2=-117(LC 8)
Max Uplift 2=-545(LC 10), 9=-545(LC 10)

FORCES. (lb) - Max. Comp./Max. Ten. - All forces 250 (lb) or less except when shown.
TOP CHORD 2-3=-3981/1911, 3-4=-3457/1734, 4-5=-3872/2004, 5-6=-3871/2003, 6-7=-3871/2003, 7-8=-3458/1734, 8-9=-3981/1911
BOT CHORD 2-19=-1618/3556, 18-19=-1619/3552, 16-18=-1348/3140, 14-16=-1694/3872, 12-14=-1349/3140, 11-12=-1619/3552, 9-11=-1618/3555
WEBS 4-18=-125/400, 7-12=-126/400, 5-16=-505/289, 6-14=-450/289, 3-18=-498/309, 4-16=-435/1025, 7-14=-434/1024, 8-12=-498/308

NOTES-
1) Unbalanced roof live loads have been considered for this design.
2) Wind: ASCE 7-10; Vult=150mph (3-second gust) Vasd=116mph; TCDL=2.0psf; BCDL=2.0psf; h=14ft; B=45ft; L=40ft; eave=5ft; Cat. II; Exp B; Encl., GCpi=0.18; MWFRS (directional) and C-C Exterior(2) zone;C-C for members and forces & MWFRS for reactions shown; Lumber DOL=1.60 plate grip DOL=1.60
3) Provide adequate drainage to prevent water ponding.
4) This truss has been designed for a 10.0 psf bottom chord live load nonconcurrent with any other live loads.
5) * This truss has been designed for a live load of 20.0psf on the bottom chord in all areas where a rectangle 3-6-0 tall by 2-0-0 wide will fit between the bottom chord and any other members.
6) Provide mechanical connection (by others) of truss to bearing plate capable of withstanding 545 lb uplift at joint 2 and 545 lb uplift at joint 9.



Julius Lee PE No.34869
MiTek USA, Inc. FL Cert 6634
6904 Parke East Blvd. Tampa FL 33610
Date:
June 29,2020

WARNING - Verify design parameters and READ NOTES ON THIS AND INCLUDED MITEK REFERENCE PAGE MII-7473 rev. 10/03/2015 BEFORE USE.
Design valid for use only with MiTek® connectors. This design is based only upon parameters shown, and is for an individual building component, not a truss system. Before use, the building designer must verify the applicability of design parameters and properly incorporate this design into the overall building design. Bracing indicated is to prevent buckling of individual truss web and/or chord members only. Additional temporary and permanent bracing is always required for stability and to prevent collapse with possible personal injury and property damage. For general guidance regarding the fabrication, storage, delivery, erection and bracing of trusses and truss systems, see *ANSI/TPI1 Quality Criteria, DSB-89 and BCSI Building Component Safety Information* available from Truss Plate Institute, 2670 Crain Highway, Suite 203 Waldorf, MD 20601

MiTek
6904 Parke East Blvd.
Tampa, FL 36610

Job	Truss	Truss Type	Qty	Ply	CHEAVES CONST. T20589032
85-20	T12	HIP	1	1	Job Reference (optional)

Manatee lumber, BRADENTON FL. 8.130 s Mar 11 2018 MiTek Industries, Inc. Mon Jun 29 09:49:35 2020 Page 1
ID:U7NZd4T9PbvFlPkYGJkq_HzAJWi-OssCiUR?q2OSf_KJLO7fMmUATGCV1ZlE7VRf16z1So_

1-4-0	4-11-4	9-0-0	14-6-14	20-0-0	25-5-2	31-0-0	35-0-12	40-0-0	41-4-0
1-4-0	4-11-4	4-0-12	5-6-14	5-5-2	5-5-2	5-6-14	4-0-12	4-11-4	1-4-0

Scale = 1:69.5

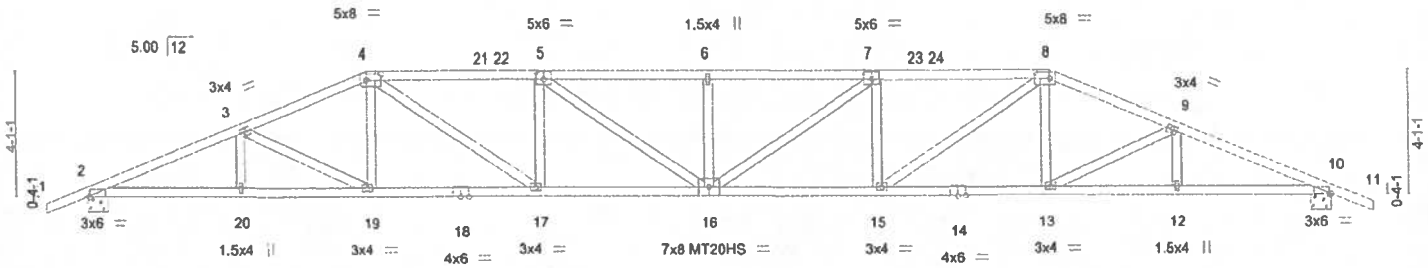

4-11-4	9-1-12	14-6-14	20-0-0	25-5-2	30-10-4	35-0-12	40-0-0
4-11-4	4-2-8	5-5-2	5-5-2	5-5-2	5-5-2	4-2-8	4-11-4

Plate Offsets (X,Y)-- [2:0-0-10,Edge], [4:0-5-12,0-2-8], [5:0-3-0,0-3-0], [7:0-3-0,0-3-0], [8:0-5-12,0-2-8], [10:0-0-10,Edge]

LOADING (psf)		SPACING-	2-0-0	CSI.		DEFL.	in	(loc)	l/defl	L/d	PLATES	GRIP
TCLL	20.0	Plate Grip DOL	1.25	TC	0.63	Vert(LL)	-0.37	16	>999	240	MT20	244/190
TCDL	17.0	Lumber DOL	1.25	BC	0.94	Vert(CT)	-0.86	16	>548	180	MT20HS	187/143
BCLL	0.0 *	Rep Stress Incr	YES	WB	0.54	Horz(CT)	0.23	10	n/a	n/a		
BCDL	10.0	Code FBC2017/TPI2014		Matrix-R							Weight: 207 lb	FT = 0%

LUMBER-
TOP CHORD 2x4 SP No.2
BOT CHORD 2x4 SP No.2 *Except*
16-18,14-16: 2x4 SP No.2D
WEBS 2x4 SP No.3

BRACING-
TOP CHORD Structural wood sheathing directly applied or 2-2-13 oc purlins.
BOT CHORD Rigid ceiling directly applied or 2-2-0 oc bracing.

REACTIONS. (lb/size) 2=1972/0-8-0, 10=1972/0-8-0
Max Horz 2=-98(LC 8)
Max Uplift 2=-545(LC 10), 10=-545(LC 10)

FORCES. (lb) - Max. Comp./Max. Ten. - All forces 250 (lb) or less except when shown.
TOP CHORD 2-3=-3983/1893, 3-4=-3645/1797, 4-5=-4444/2237, 5-6=-4805/2410, 6-7=-4805/2410, 7-8=-4444/2237, 8-9=-3645/1797, 9-10=-3983/1893
BOT CHORD 2-20=-1608/3558, 19-20=-1608/3558, 17-19=-1448/3328, 16-17=-1989/4469, 15-16=-1989/4469, 13-15=-1448/3328, 12-13=-1608/3558, 10-12=-1608/3558
WEBS 4-19=-74/309, 6-16=-376/248, 8-13=-74/309, 3-19=-296/181, 9-13=-296/181, 4-17=-636/1424, 5-17=-696/384, 5-16=-195/475, 7-16=-195/475, 7-15=-696/384, 8-15=-636/1424

NOTES-
1) Unbalanced roof live loads have been considered for this design.
2) Wind: ASCE 7-10; Vult=150mph (3-second gust) Vasd=116mph; TCDL=2.0psf; BCDL=2.0psf; h=14ft; B=45ft; L=40ft; eave=5ft; Cat. II; Exp B; Encl., GCpi=0.18; MWFRS (directional) and C-C Exterior(2) zone;C-C for members and forces & MWFRS for reactions shown; Lumber DOL=1.60 plate grip DOL=1.60
3) Provide adequate drainage to prevent water ponding.
4) All plates are MT20 plates unless otherwise indicated.
5) This truss has been designed for a 10.0 psf bottom chord live load nonconcurrent with any other live loads.
6) * This truss has been designed for a live load of 20.0psf on the bottom chord in all areas where a rectangle 3-6-0 tall by 2-0-0 wide will fit between the bottom chord and any other members.
7) Provide mechanical connection (by others) of truss to bearing plate capable of withstanding 545 lb uplift at joint 2 and 545 lb uplift at joint 10.



Julius Lee PE No.34869
MiTek USA, Inc. FL Cert 6634
6904 Parke East Blvd. Tampa FL 33610
Date:
June 29,2020

WARNING - Verify design parameters and READ NOTES ON THIS AND INCLUDED MITEK REFERENCE PAGE MII-7473 rev. 10/03/2015 BEFORE USE.
Design valid for use only with MiTek® connectors. This design is based only upon parameters shown, and is for an individual building component, not a truss system. Before use, the building designer must verify the applicability of design parameters and properly incorporate this design into the overall building design. Bracing indicated is to prevent buckling of individual truss web and/or chord members only. Additional temporary and permanent bracing is always required for stability and to prevent collapse with possible personal injury and property damage. For general guidance regarding the fabrication, storage, delivery, erection and bracing of trusses and truss systems, see *ANSI/TPI1 Quality Criteria, DSB-89 and BCSI Building Component Safety Information* available from Truss Plate Institute, 2670 Crain Highway, Suite 203 Waldorf, MD 20601



6904 Parke East Blvd.
Tampa, FL 33610

202869

Job	Truss	Truss Type	Qty	Ply	CHEAVES CONST.
85-20	T13	HIP	2	2	T20589033
					Job Reference (optional)

Manatee lumber, BRADENTON FL. 8.130 s Mar 11 2018 MiTek Industries, Inc. Mon Jun 29 09:49:36 2020 Page 1

ID:U7NZd4T9PbvFlPkYGJkq_HzAJWi-s2QavqRdbMWJH8vVu6euuz1FPgYOmy_OL9ADZYz1Snz

1-4-0	4-0-13	7-0-0	12-3-7	17-5-2	22-6-14	27-8-9	33-0-0	35-11-3	40-0-0	41-4-0
1-4-0	4-0-13	2-11-3	5-3-7	5-1-11	5-1-11	5-1-11	5-3-7	2-11-3	4-0-13	1-4-0

Scale = 1:69.5

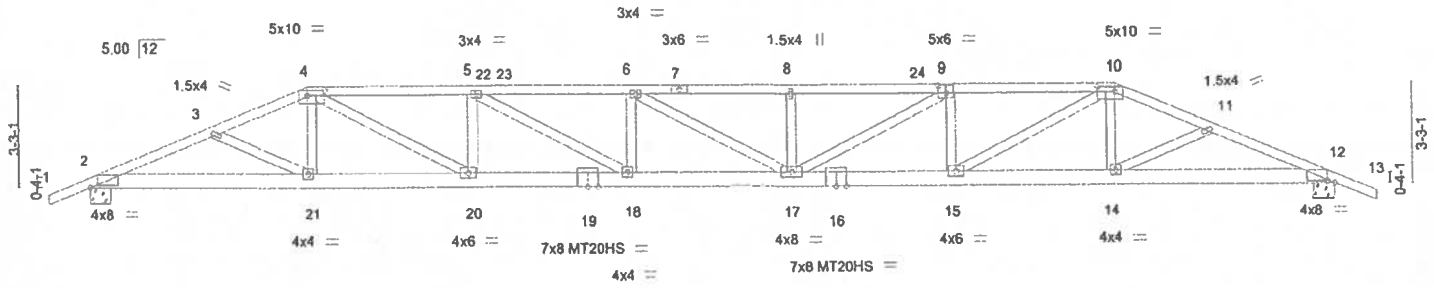

7-0-0	12-3-7	17-5-2	22-6-14	27-8-9	33-0-0	40-0-0
7-0-0	5-3-7	5-1-11	5-1-11	5-1-11	5-3-7	7-0-0

Plate Offsets (X,Y)– [2:0-2-12,0-0-12], [4:0-6-12,0-2-0], [9:0-3-0,0-3-0], [10:0-6-12,0-2-0], [12:0-2-12,0-0-12]

LOADING (psf)		SPACING-	2-0-0	CSI.		DEFL.	in	(loc)	l/defl	L/d	PLATES	GRIP
TCLL	20.0	Plate Grip DOL	1.25	TC	1.00	Vert(LL)	-0.49	17-18	>969	240	MT20	244/190
TCDL	17.0	Lumber DOL	1.25	BC	0.90	Vert(CT)	-1.15	17-18	>412	180	MT20HS	187/143
BCLL	0.0 *	Rep Stress Incr	NO	WB	0.81	Horz(CT)	0.17	12	n/a	n/a		
BCDL	10.0	Code	FBC2017/TPI2014	Matrix-R							Weight: 464 lb	FT = 0%

LUMBER-
TOP CHORD 2x4 SP No.2 *Except*
4-7,9-10: 2x4 SP No.2D, 7-9: 2x4 SP M 30
BOT CHORD 2x6 SP No.1
WEBS 2x4 SP No.3

BRACING-
TOP CHORD Structural wood sheathing directly applied.
BOT CHORD Rigid ceiling directly applied or 8-10-8 oc bracing.

REACTIONS. (lb/size) 2=3896/0-8-0, 12=3896/0-8-0
Max Horz 2=79(LC 7)
Max Uplift 2=-1131(LC 8), 12=-1131(LC 8)
Max Grav 2=3966(LC 13), 12=3966(LC 14)

FORCES. (lb) - Max. Comp./Max. Ten. - All forces 250 (lb) or less except when shown.
TOP CHORD 2-3=-8904/2436, 3-4=-8945/2459, 4-5=-11954/3372, 5-6=-13704/3878, 6-8=-13665/3864, 8-9=-13665/3864, 9-10=-11940/3365, 10-11=-8948/2460, 11-12=-8901/2434
BOT CHORD 2-21=-2158/8119, 20-21=-2188/8342, 18-20=-3250/11985, 17-18=-3756/13736, 15-17=-3275/12005, 14-15=-2190/8287, 12-14=-2157/8056
WEBS 3-21=-97/351, 4-21=-124/819, 4-20=-1208/4242, 5-20=-1823/620, 5-18=-580/2086, 6-18=-795/323, 8-17=-759/316, 9-17=-540/1967, 9-15=-1796/610, 10-15=-1199/4221, 10-14=-122/813, 11-14=-101/360

NOTES-
1) 2-ply truss to be connected together with 10d (0.131"x3") nails as follows:
Top chords connected as follows: 2x4 - 1 row at 0-7-0 oc.
Bottom chords connected as follows: 2x6 - 2 rows staggered at 0-9-0 oc.
Webs connected as follows: 2x4 - 1 row at 0-9-0 oc.
2) All loads are considered equally applied to all plies, except if noted as front (F) or back (B) face in the LOAD CASE(S) section. Ply to ply connections have been provided to distribute only loads noted as (F) or (B), unless otherwise indicated.
3) Unbalanced roof live loads have been considered for this design.
4) Wind: ASCE 7-10; Vult=150mph (3-second gust) Vasd=116mph; TCDL=2.0psf; BCDL=2.0psf; h=14ft; B=45ft; L=40ft; eave=5ft; Cat. II; Exp B; Encl., GCpi=0.18; MWFRS (directional); Lumber DOL=1.60 plate grip DOL=1.60
5) Provide adequate drainage to prevent water ponding.
6) All plates are MT20 plates unless otherwise indicated.
7) This truss has been designed for a 10.0 psf bottom chord live load nonconcurrent with any other live loads.
8) * This truss has been designed for a live load of 20.0psf on the bottom chord in all areas where a rectangle 3-6-0 tall by 2-0-0 wide will fit between the bottom chord and any other members.
9) Provide mechanical connection (by others) of truss to bearing plate capable of withstanding 1131 lb uplift at joint 2 and 1131 lb uplift at joint 12.
10) Girder carries hip end with 7-0-0 end setback.
11) Hanger(s) or other connection device(s) shall be provided sufficient to support concentrated load(s) 719 lb down and 171 lb up at 33-0-0, and 719 lb down and 171 lb up at 7-0-0 on bottom chord. The design/selection of such connection device(s) is the responsibility of others.

Continued on page 2

JULIUS LEE LICENSE No 34869 STATE OF FLORIDA PROFESSIONAL ENGINEER

Julius Lee PE No.34869
MiTek USA, Inc. FL Cert 6634
6904 Parke East Blvd. Tampa FL 33610
Date: June 29,2020

⚠ WARNING - Verify design parameters and READ NOTES ON THIS AND INCLUDED MITEK REFERENCE PAGE MII-7473 rev. 10/03/2015 BEFORE USE.
Design valid for use only with MiTek® connectors. This design is based only upon parameters shown, and is for an individual building component, not a truss system. Before use, the building designer must verify the applicability of design parameters and properly incorporate this design into the overall building design. Bracing indicated is to prevent buckling of individual truss web and/or chord members only. Additional temporary and permanent bracing is always required for stability and to prevent collapse with possible personal injury and property damage. For general guidance regarding the fabrication, storage, delivery, erection and bracing of trusses and truss systems, see *ANSI/TPI1 Quality Criteria, DSB-89 and BCSI Building Component Safety Information* available from Truss Plate Institute, 2670 Crain Highway, Suite 203 Waldorf, MD 20601

MiTek
6904 Parke East Blvd.
Tampa, FL 33610

202869

Job	Truss	Truss Type	Qty	Ply	CHEAVES CONST. T20589033
85-20	T13	HIP	2	2	Job Reference (optional)

Manatee lumber, BRADENTON FL. 8.130 s Mar 11 2018 MiTek Industries, Inc. Mon Jun 29 09:49:36 2020 Page 2
ID:U7NZd4T9PbvFIPkYGJkq_HzAJWi-s2QavqRdbMWJH8vVu6euuz1FPgYOmy_OL9ADZYz1Snz

LOAD CASE(S) Standard

1) Dead + Roof Live (balanced): Lumber Increase=1.25, Plate Increase=1.25
   Uniform Loads (plf)
   Vert: 1-4=-74, 4-10=-154(F=-80), 10-13=-74, 2-21=-20, 14-21=-42(F=-22), 12-14=-20
   Concentrated Loads (lb)
   Vert: 21=-603(F) 14=-603(F)

⚠ WARNING - Verify design parameters and READ NOTES ON THIS AND INCLUDED MITEK REFERENCE PAGE MII-7473 rev. 10/03/2015 BEFORE USE.
Design valid for use only with MiTek® connectors. This design is based only upon parameters shown, and is for an individual building component, not a truss system. Before use, the building designer must verify the applicability of design parameters and properly incorporate this design into the overall building design. Bracing indicated is to prevent buckling of individual truss web and/or chord members only. Additional temporary and permanent bracing is always required for stability and to prevent collapse with possible personal injury and property damage. For general guidance regarding the fabrication, storage, delivery, erection and bracing of trusses and truss systems, see *ANSI/TPI1 Quality Criteria, DSB-89 and BCSI Building Component Safety Information* available from Truss Plate Institute, 2670 Crain Highway, Suite 203 Waldorf, MD 20601

MiTek
6904 Parke East Blvd.
Tampa, FL 36610

202869

Job	Truss	Truss Type	Qty	Ply	CHEAVES CONST. T20589034
85-20	T14	HIP	1	1	Job Reference (optional)

Manatee lumber, BRADENTON FL. 8.130 s Mar 11 2018 MiTek Industries, Inc. Mon Jun 29 09:49:37 2020 Page 1
ID:U7NZd4T9PbvFIPkYGJkq_HzAJWi-KF_y7ASFMgeAuIUhSp97RBab03_CVazXapwm5_z1Sny

4-5-8	7-10-8	11-4-0	14-9-8	18-2-8	22-8-0
4-5-8	3-5-1	3-5-8	3-5-8	3-5-0	4-5-8

Scale = 1:37.9

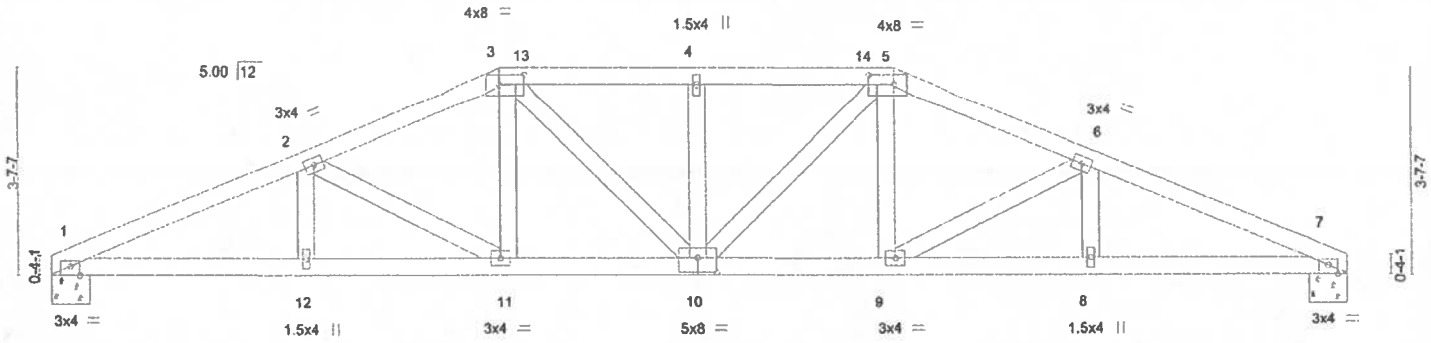

4-5-8	8-0-4	11-4-0	14-7-12	18-2-8	22-8-0
4-5-8	3-6-13	3-3-12	3-3-12	3-6-12	4-5-8

Plate Offsets (X,Y)-- [1:0-2-0,Edge], [3:0-5-4,0-2-0], [5:0-5-4,0-2-0], [7:0-2-0,Edge], [10:0-4-0,0-3-0]

LOADING (psf)		SPACING-	2-0-0	CSI.		DEFL.	in	(loc)	l/defl	L/d	PLATES	GRIP
TCLL	20.0	Plate Grip DOL	1.25	TC	0.30	Vert(LL)	-0.07	10	>999	240	MT20	244/190
TCDL	17.0	Lumber DOL	1.25	BC	0.54	Vert(CT)	-0.17	10	>999	180		
BCLL	0.0 *	Rep Stress Incr	YES	WB	0.12	Horz(CT)	0.06	7	n/a	n/a		
BCDL	10.0	Code FBC2017/TPI2014		Matrix-R							Weight: 112 lb	FT = 0%

LUMBER-
TOP CHORD 2x4 SP No.2
BOT CHORD 2x4 SP No.2
WEBS 2x4 SP No.3

BRACING-
TOP CHORD Structural wood sheathing directly applied or 3-8-11 oc purlins.
BOT CHORD Rigid ceiling directly applied or 6-1-11 oc bracing.

REACTIONS. (lb/size) 1=1034/0-8-0, 7=1034/0-8-0
Max Horz 1=-76(LC 8)
Max Uplift 1=-263(LC 10), 7=-263(LC 10)

FORCES. (lb) - Max. Comp./Max. Ten. - All forces 250 (lb) or less except when shown.
TOP CHORD 1-2=-2121/1049, 2-3=-1741/907, 3-4=-1729/950, 4-5=-1729/950, 5-6=-1741/907, 6-7=-2121/1049
BOT CHORD 1-12=-898/1872, 11-12=-898/1872, 10-11=-688/1571, 9-10=-688/1571, 8-9=-898/1872, 7-8=-898/1872
WEBS 3-11=-103/272, 5-9=-103/272, 4-10=-252/156, 2-11=-367/243, 3-10=-101/302, 5-10=-101/302, 6-9=-368/243

NOTES-
1) Unbalanced roof live loads have been considered for this design.
2) Wind: ASCE 7-10; Vult=150mph (3-second gust) Vasd=116mph; TCDL=2.0psf; BCDL=2.0psf; h=14ft; B=45ft; L=40ft; eave=5ft; Cat. II; Exp B; Encl., GCpi=0.18; MWFRS (directional) and C-C Exterior(2) zone;C-C for members and forces & MWFRS for reactions shown; Lumber DOL=1.60 plate grip DOL=1.60
3) Provide adequate drainage to prevent water ponding.
4) This truss has been designed for a 10.0 psf bottom chord live load nonconcurrent with any other live loads.
5) * This truss has been designed for a live load of 20.0psf on the bottom chord in all areas where a rectangle 3-6-0 tall by 2-0-0 wide will fit between the bottom chord and any other members.
6) Provide mechanical connection (by others) of truss to bearing plate capable of withstanding 263 lb uplift at joint 1 and 263 lb uplift at joint 7.



Julius Lee PE No.34869
MiTek USA, Inc. FL Cert 6634
6904 Parke East Blvd. Tampa FL 33610
Date:

June 29,2020

WARNING - Verify design parameters and READ NOTES ON THIS AND INCLUDED MITEK REFERENCE PAGE MII-7473 rev. 10/03/2015 BEFORE USE.
Design valid for use only with MiTek® connectors. This design is based only upon parameters shown, and is for an individual building component, not a truss system. Before use, the building designer must verify the applicability of design parameters and properly incorporate this design into the overall building design. Bracing indicated is to prevent buckling of individual truss web and/or chord members only. Additional temporary and permanent bracing is always required for stability and to prevent collapse with possible personal injury and property damage. For general guidance regarding the fabrication, storage, delivery, erection and bracing of trusses and truss systems, see *ANSI/TPI1 Quality Criteria, DSB-89 and BCSI Building Component Safety Information* available from Truss Plate Institute, 2670 Crain Highway, Suite 203 Waldorf, MD 20601

MiTek
6904 Parke East Blvd.
Tampa, FL 36610

202869

Job	Truss	Truss Type	Qty	Ply	CHEAVES CONST. T20589035
85-20	T15	HIP	1	1	Job Reference (optional)

Manatee lumber, BRADENTON FL. 8.130 s Mar 11 2018 MiTek Industries, Inc. Mon Jun 29 09:49:38 2020 Page 1
ID:U7NZd4T9PbvFIPkYGJkq_HzAJWi-oRYKKVTt7zm1WS3u0XgM_O6flTFnE_7hpTfJdRz1Snx

-1-4-0	4-0-13	7-0-0	11-4-0	15-8-0	18-7-3	22-8-0	24-0-0
1-4-0	4-0-13	2-11-3	4-4-0	4-4-0	2-11-3	4-0-13	1-4-0

Scale = 1:41.3

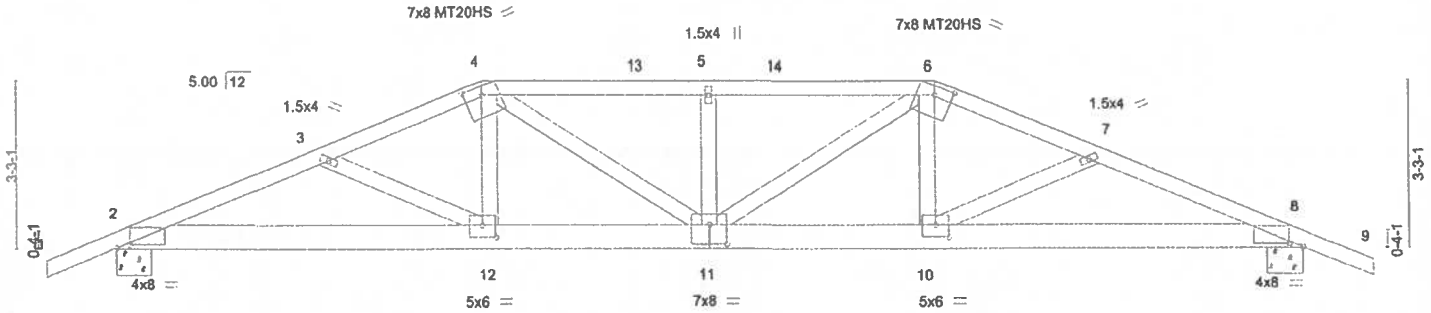

7-1-12	11-4-0	15-6-4	22-8-0
7-1-12	4-2-4	4-2-4	7-1-12

Plate Offsets (X,Y)— [2:0-3-0,0-0-12], [4:0-4-0,0-2-2], [6:0-4-0,0-2-2], [8:0-3-0,0-0-12], [10:0-3-0,0-2-12], [11:0-4-0,0-4-8], [12:0-3-0,0-2-12]

LOADING (psf)		SPACING-	2-0-0	CSI.		DEFL.	in	(loc)	l/defl	L/d	PLATES	GRIP
TCLL	20.0	Plate Grip DOL	1.25	TC	0.75	Vert(LL)	-0.16	11	>999	240	MT20	244/190
TCDL	17.0	Lumber DOL	1.25	BC	0.84	Vert(CT)	-0.38	11	>692	180	MT20HS	187/143
BCLL	0.0 *	Rep Stress Incr	NO	WB	0.32	Horz(CT)	0.09	8	n/a	n/a		
BCDL	10.0	Code FBC2017/TPI2014		Matrix-R							Weight: 128 lb	FT = 0%

LUMBER-
TOP CHORD 2x4 SP No.2
BOT CHORD 2x6 SP No.2
WEBS 2x4 SP No.3

BRACING-
TOP CHORD Structural wood sheathing directly applied or 2-1-4 oc purlins.
BOT CHORD Rigid ceiling directly applied or 7-1-1 oc bracing.

REACTIONS. (lb/size) 2=2199/0-8-0, 8=2199/0-8-0
Max Horz 2=79(LC 7)
Max Uplift 2=-648(LC 8), 8=-648(LC 8)
Max Grav 2=2271(LC 13), 8=2271(LC 14)

FORCES. (lb) - Max. Comp./Max. Ten. - All forces 250 (lb) or less except when shown.
TOP CHORD 2-3=-4794/1265, 3-4=-4669/1239, 4-5=-4964/1375, 5-6=-4964/1375, 6-7=-4669/1239, 7-8=-4795/1265
BOT CHORD 2-12=-1092/4376, 11-12=-1057/4386, 10-11=-1057/4330, 8-10=-1092/4317
WEBS 4-12=-148/894, 6-10=-148/894, 5-11=-687/287, 4-11=-235/835, 6-11=-235/835

NOTES-
1) Unbalanced roof live loads have been considered for this design.
2) Wind: ASCE 7-10; Vult=150mph (3-second gust) Vasd=116mph; TCDL=2.0psf; BCDL=2.0psf; h=14ft; B=45ft; L=40ft; eave=5ft; Cat. II; Exp B; Encl., GCpi=0.18; MWFRS (directional); Lumber DOL=1.60 plate grip DOL=1.60
3) Provide adequate drainage to prevent water ponding.
4) All plates are MT20 plates unless otherwise indicated.
5) This truss has been designed for a 10.0 psf bottom chord live load nonconcurrent with any other live loads.
6) * This truss has been designed for a live load of 20.0psf on the bottom chord in all areas where a rectangle 3-6-0 tall by 2-0-0 wide will fit between the bottom chord and any other members.
7) Provide mechanical connection (by others) of truss to bearing plate capable of withstanding 648 lb uplift at joint 2 and 648 lb uplift at joint 8.
8) Girder carries hip end with 7-0-0 end setback.
9) Hanger(s) or other connection device(s) shall be provided sufficient to support concentrated load(s) 719 lb down and 171 lb up at 15-8-0, and 719 lb down and 171 lb up at 7-0-0 on bottom chord. The design/selection of such connection device(s) is the responsibility of others.
10) In the LOAD CASE(S) section, loads applied to the face of the truss are noted as front (F) or back (B).

LOAD CASE(S) Standard
1) Dead + Roof Live (balanced): Lumber Increase=1.25, Plate Increase=1.25
Uniform Loads (plf)
Vert: 1-4=-74, 4-6=-154(F=-80), 6-9=-74, 2-12=-20, 10-12=-42(F=-22), 8-10=-20
Concentrated Loads (lb)
Vert: 12=-603(F) 10=-603(F)



Julius Lee PE No.34869
MiTek USA, Inc. FL Cert 6634
6904 Parke East Blvd. Tampa FL 33610
Date:

June 29,2020

WARNING - Verify design parameters and READ NOTES ON THIS AND INCLUDED MITEK REFERENCE PAGE MII-7473 rev. 10/03/2015 BEFORE USE.
Design valid for use only with MiTek® connectors. This design is based only upon parameters shown, and is for an individual building component, not a truss system. Before use, the building designer must verify the applicability of design parameters and properly incorporate this design into the overall building design. Bracing indicated is to prevent buckling of individual truss web and/or chord members only. Additional temporary and permanent bracing is always required for stability and to prevent collapse with possible personal injury and property damage. For general guidance regarding the fabrication, storage, delivery, erection and bracing of trusses and truss systems, see *ANSI/TPI1 Quality Criteria, DSB-89 and BCSI Building Component Safety Information* available from Truss Plate Institute, 2670 Crain Highway, Suite 203 Waldorf, MD 20601

MiTek
6904 Parke East Blvd.
Tampa, FL 36610

Job	Truss	Truss Type	Qty	Ply	CHEAVES CONST.	T20589036
85-20	V1	GABLE	1	1	Job Reference (optional)	

Manatee lumber, BRADENTON FL. 8.130 s Mar 11 2018 MiTek Industries, Inc. Mon Jun 29 09:49:51 2020 Page 1
ID:U7NZd4T9PbvFlPkYGJkq_HzAJWi-wxqF3yd13zPBaSYOHlPP?89_0js1nw4bo_JVbAz1Snk

8-0-0 | 10-11-0 | 18-11-0
8-0-0 | 2-11-0 | 8-0-0

Scale = 1:30.3

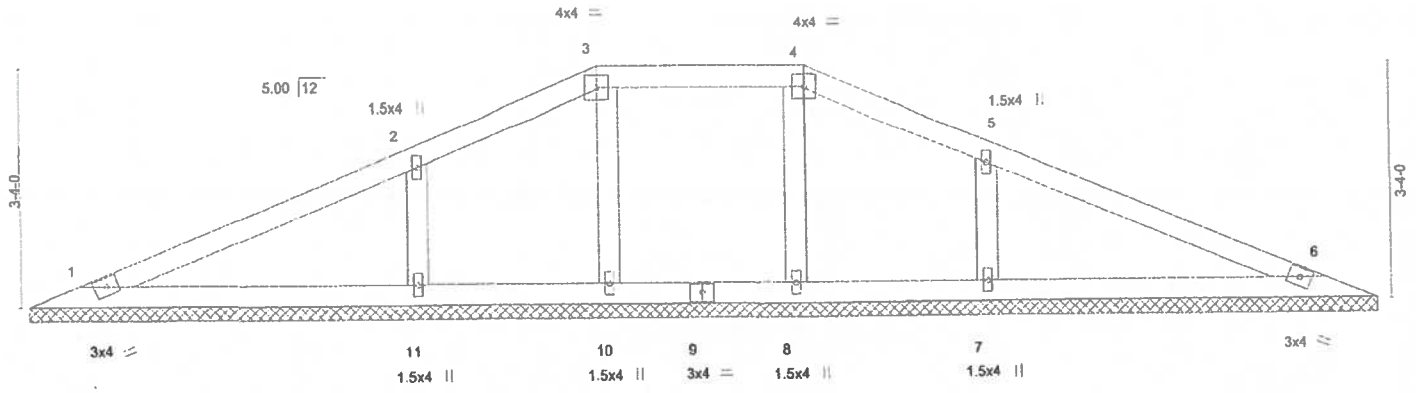

8-0-0 | 10-11-0 | 18-11-0
8-0-0 | 2-11-0 | 8-0-0

LOADING (psf)		SPACING-	2-0-0	CSI.		DEFL.	in	(loc)	l/defl	L/d	PLATES	GRIP
TCLL	20.0	Plate Grip DOL	1.25	TC	0.27	Vert(LL)	n/a	-	n/a	999	MT20	244/190
TCDL	17.0	Lumber DOL	1.25	BC	0.18	Vert(CT)	n/a	-	n/a	999		
BCLL	0.0 *	Rep Stress Incr	YES	WB	0.08	Horz(CT)	0.00	6	n/a	n/a		
BCDL	10.0	Code	FBC2017/TPI2014	Matrix-R							Weight: 69 lb	FT = 0%

LUMBER-
TOP CHORD 2x4 SP No.2
BOT CHORD 2x4 SP No.2
WEBS 2x4 SP No.2
OTHERS 2x4 SP No.3

BRACING-
TOP CHORD Structural wood sheathing directly applied or 6-0-0 oc purlins.
BOT CHORD Rigid ceiling directly applied or 10-0-0 oc bracing.

REACTIONS. All bearings 18-11-0.
(lb) - Max Horz 1=69(LC 9)
Max Uplift All uplift 100 lb or less at joint(s) 1, 6, 10, 8 except 11=-139(LC 10), 7=-139(LC 10)
Max Grav All reactions 250 lb or less at joint(s) 1, 6, 10, 8 except 11=448(LC 15), 7=448(LC 16)

FORCES. (lb) - Max. Comp./Max. Ten. - All forces 250 (lb) or less except when shown.
WEBS 2-11=-325/266, 5-7=-325/266

NOTES-
1) Unbalanced roof live loads have been considered for this design.
2) Wind: ASCE 7-10; Vult=150mph (3-second gust) Vasd=116mph; TCDL=2.0psf; BCDL=2.0psf; h=14ft; B=45ft; L=40ft; eave=2ft; Cat. II; Exp B; Encl., GCpi=0.18; MWFRS (directional) and C-C Exterior(2) zone;C-C for members and forces & MWFRS for reactions shown; Lumber DOL=1.60 plate grip DOL=1.60
3) Truss designed for wind loads in the plane of the truss only. For studs exposed to wind (normal to the face), see Standard Industry Gable End Details as applicable, or consult qualified building designer as per ANSI/TPI 1.
4) Provide adequate drainage to prevent water ponding.
5) Gable requires continuous bottom chord bearing.
6) Gable studs spaced at 4-0-0 oc.
7) This truss has been designed for a 10.0 psf bottom chord live load nonconcurrent with any other live loads.
8) * This truss has been designed for a live load of 20.0psf on the bottom chord in all areas where a rectangle 3-6-0 tall by 2-0-0 wide will fit between the bottom chord and any other members.
9) Provide mechanical connection (by others) of truss to bearing plate capable of withstanding 100 lb uplift at joint(s) 1, 6, 10, 8 except (jt=lb) 11=139, 7=139.



Julius Lee PE No.34869
MiTek USA, Inc. FL Cert 6634
6904 Parke East Blvd. Tampa FL 33610
Date:

June 29,2020

WARNING - Verify design parameters and READ NOTES ON THIS AND INCLUDED MITEK REFERENCE PAGE MII-7473 rev. 10/03/2015 BEFORE USE.
Design valid for use only with MiTek® connectors. This design is based only upon parameters shown, and is for an individual building component, not a truss system. Before use, the building designer must verify the applicability of design parameters and properly incorporate this design into the overall building design. Bracing indicated is to prevent buckling of individual truss web and/or chord members only. Additional temporary and permanent bracing is always required for stability and to prevent collapse with possible personal injury and property damage. For general guidance regarding the fabrication, storage, delivery, erection and bracing of trusses and truss systems, see *ANSI/TPI1 Quality Criteria, DSB-89 and BCSI Building Component Safety Information* available from Truss Plate Institute, 2670 Crain Highway, Suite 203 Waldorf, MD 20601

MiTek
6904 Parke East Blvd.
Tampa, FL 36610

202869

Job	Truss	Truss Type	Qty	Ply	CHEAVES CONST. T20589037
85-20	V2	GABLE	1	1	Job Reference (optional)

Manatee lumber, BRADENTON FL. 8.130 s Mar 11 2018 MiTek Industries, Inc. Mon Jun 29 09:49:52 2020 Page 1
ID:U7NZd4T9PbvFlPkYGJkq_HzAJWi-O7OdGlefqHX2Cc7aqTweYLhAq6DJWNTk1e237dz1Snj

7-5-8 / 7-5-8 | 14-11-0 / 7-5-8

Scale = 1:23.5

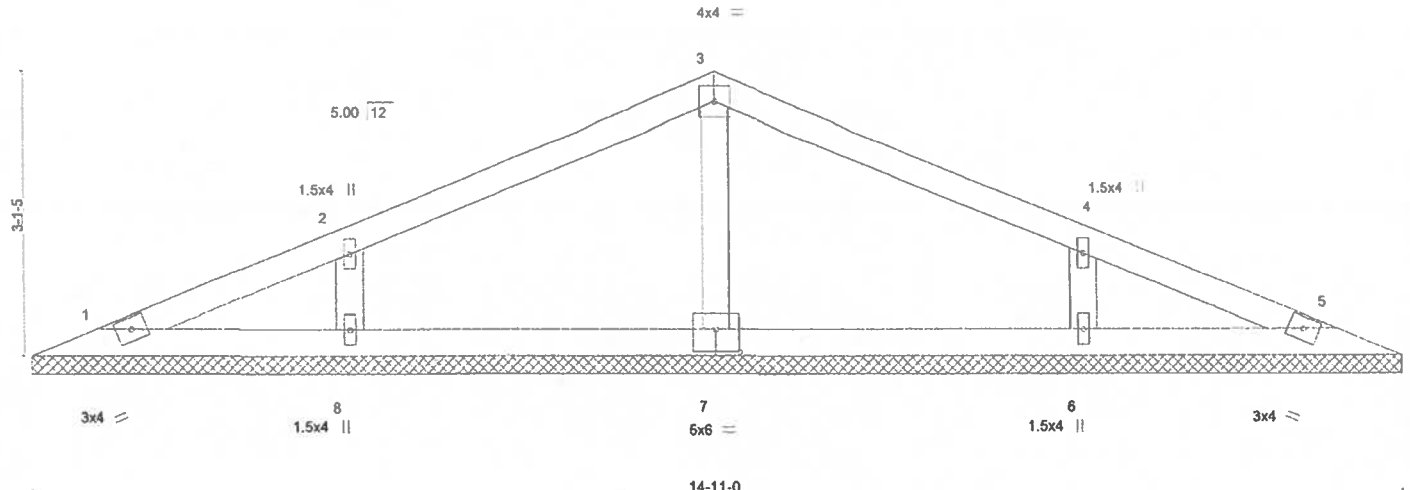

14-11-0 / 14-11-0

Plate Offsets (X,Y)-- [7:0-3-0,0-3-0]

LOADING (psf)		SPACING-	2-0-0	CSI.		DEFL.	in	(loc)	l/defl	L/d	PLATES	GRIP
TCLL	20.0	Plate Grip DOL	1.25	TC	0.20	Vert(LL)	n/a	-	n/a	999	MT20	244/190
TCDL	17.0	Lumber DOL	1.25	BC	0.12	Vert(CT)	n/a	-	n/a	999		
BCLL	0.0 *	Rep Stress Incr	YES	WB	0.07	Horz(CT)	0.00	5	n/a	n/a		
BCDL	10.0	Code FBC2017/TPI2014		Matrix-R							Weight: 50 lb	FT = 0%

LUMBER-
TOP CHORD 2x4 SP No.2
BOT CHORD 2x4 SP No.2
OTHERS 2x4 SP No.3

BRACING-
TOP CHORD Structural wood sheathing directly applied or 6-0-0 oc purlins.
BOT CHORD Rigid ceiling directly applied or 10-0-0 oc bracing.

REACTIONS. All bearings 14-11-0.
(lb) - Max Horz 1=-64(LC 8)
Max Uplift All uplift 100 lb or less at joint(s) 1, 5, 7 except 8=-109(LC 10), 6=-109(LC 10)
Max Grav All reactions 250 lb or less at joint(s) 1, 5 except 7=367(LC 1), 8=361(LC 19), 6=361(LC 20)

FORCES. (lb) - Max. Comp./Max. Ten. - All forces 250 (lb) or less except when shown.
WEBS 3-7=-286/162, 2-8=-282/236, 4-6=-282/236

NOTES-
1) Unbalanced roof live loads have been considered for this design.
2) Wind: ASCE 7-10; Vult=150mph (3-second gust) Vasd=116mph; TCDL=2.0psf; BCDL=2.0psf; h=14ft; B=45ft; L=40ft; eave=2ft; Cat. II; Exp B; Encl., GCpi=0.18; MWFRS (directional) and C-C Exterior(2) zone;C-C for members and forces & MWFRS for reactions shown; Lumber DOL=1.60 plate grip DOL=1.60
3) Truss designed for wind loads in the plane of the truss only. For studs exposed to wind (normal to the face), see Standard Industry Gable End Details as applicable, or consult qualified building designer as per ANSI/TPI 1.
4) Gable requires continuous bottom chord bearing.
5) Gable studs spaced at 4-0-0 oc.
6) This truss has been designed for a 10.0 psf bottom chord live load nonconcurrent with any other live loads.
7) * This truss has been designed for a live load of 20.0psf on the bottom chord in all areas where a rectangle 3-6-0 tall by 2-0-0 wide will fit between the bottom chord and any other members.
8) Provide mechanical connection (by others) of truss to bearing plate capable of withstanding 100 lb uplift at joint(s) 1, 5, 7 except (jt=lb) 8=109, 6=109.



Julius Lee PE No.34869
MiTek USA, Inc. FL Cert 6634
6904 Parke East Blvd. Tampa FL 33610
Date:
June 29,2020

⚠ WARNING - Verify design parameters and READ NOTES ON THIS AND INCLUDED MITEK REFERENCE PAGE MII-7473 rev. 10/03/2015 BEFORE USE.
Design valid for use only with MiTek® connectors. This design is based only upon parameters shown, and is for an individual building component, not a truss system. Before use, the building designer must verify the applicability of design parameters and properly incorporate this design into the overall building design. Bracing indicated is to prevent buckling of individual truss web and/or chord members only. Additional temporary and permanent bracing is always required for stability and to prevent collapse with possible personal injury and property damage. For general guidance regarding the fabrication, storage, delivery, erection and bracing of trusses and truss systems, see *ANSI/TPI1 Quality Criteria, DSB-89 and BCSI Building Component Safety Information* available from Truss Plate Institute, 2670 Crain Highway, Suite 203 Waldorf, MD 20601

MiTek
6904 Parke East Blvd.
Tampa, FL 33610

202869

Job	Truss	Truss Type	Qty	Ply	CHEAVES CONST. T20589038
85-20	V3	GABLE	1	1	Job Reference (optional)

Manatee lumber, BRADENTON FL. 8.130 s Mar 11 2018 MiTek Industries, Inc. Mon Jun 29 09:49:53 2020 Page 1
ID:U7NZd4T9PbvFlPkYGJkq_HzAJWi-O7OdGlefqHX2Cc7aqTweYLh8f8BdWOok1e237cz1Snj

5-5-8 / 5-5-8 — 10-11-0 / 5-5-8

Scale = 1:17.2

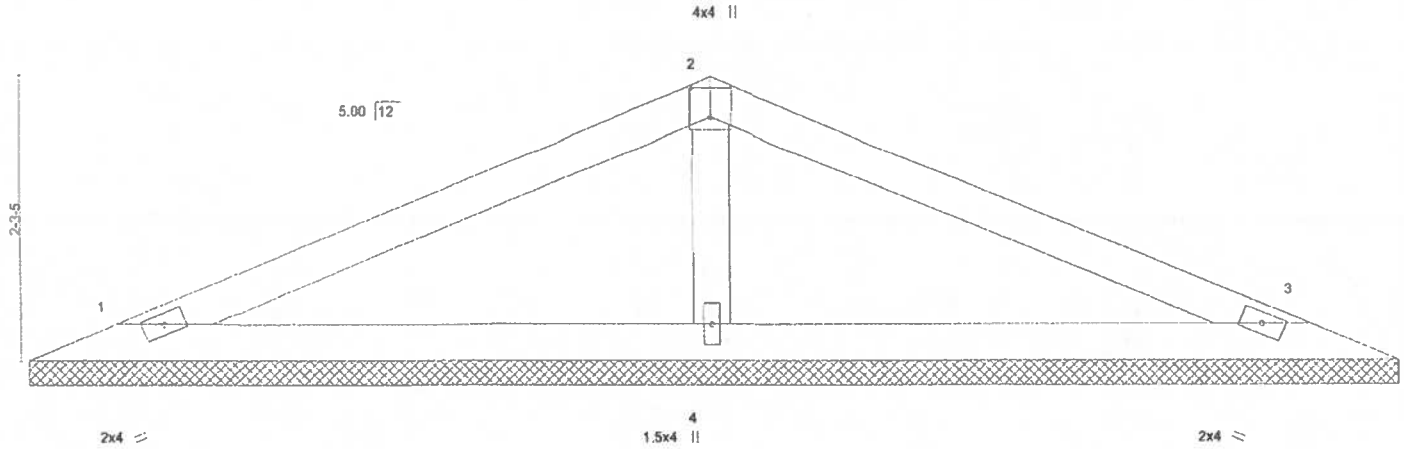

Plate Offsets (X,Y)-- [2:0-2-12,0-2-0]

LOADING (psf)		SPACING-	2-0-0	CSI.		DEFL.	in	(loc)	l/defl	L/d	PLATES	GRIP
TCLL	20.0	Plate Grip DOL	1.25	TC	0.34	Vert(LL)	n/a	-	n/a	999	MT20	244/190
TCDL	17.0	Lumber DOL	1.25	BC	0.22	Vert(CT)	n/a	-	n/a	999		
BCLL	0.0 *	Rep Stress Incr	YES	WB	0.05	Horz(CT)	0.00	3	n/a	n/a		
BCDL	10.0	Code FBC2017/TPI2014		Matrix-R							Weight: 34 lb	FT = 0%

LUMBER-
TOP CHORD 2x4 SP No.2
BOT CHORD 2x4 SP No.2
OTHERS 2x4 SP No.2

BRACING-
TOP CHORD Structural wood sheathing directly applied or 6-0-0 oc purlins.
BOT CHORD Rigid ceiling directly applied or 10-0-0 oc bracing.

REACTIONS. (lb/size) 1=181/10-11-0, 3=181/10-11-0, 4=527/10-11-0
Max Horz 1=45(LC 9)
Max Uplift 1=-50(LC 10), 3=-50(LC 10), 4=-127(LC 10)
Max Grav 1=189(LC 19), 3=189(LC 20), 4=527(LC 1)

FORCES. (lb) - Max. Comp./Max. Ten. - All forces 250 (lb) or less except when shown.
WEBS 2-4=-374/282

NOTES-
1) Unbalanced roof live loads have been considered for this design.
2) Wind: ASCE 7-10; Vult=150mph (3-second gust) Vasd=116mph; TCDL=2.0psf; BCDL=2.0psf; h=14ft; B=45ft; L=40ft; eave=2ft; Cat. II; Exp B; Encl., GCpi=0.18; MWFRS (directional) and C-C Exterior(2) zone;C-C for members and forces & MWFRS for reactions shown; Lumber DOL=1.60 plate grip DOL=1.60
3) Truss designed for wind loads in the plane of the truss only. For studs exposed to wind (normal to the face), see Standard Industry Gable End Details as applicable, or consult qualified building designer as per ANSI/TPI 1.
4) Gable requires continuous bottom chord bearing.
5) Gable studs spaced at 4-0-0 oc.
6) This truss has been designed for a 10.0 psf bottom chord live load nonconcurrent with any other live loads.
7) * This truss has been designed for a live load of 20.0psf on the bottom chord in all areas where a rectangle 3-6-0 tall by 2-0-0 wide will fit between the bottom chord and any other members.
8) Provide mechanical connection (by others) of truss to bearing plate capable of withstanding 100 lb uplift at joint(s) 1, 3 except (jt=lb) 4=127.



Julius Lee PE No.34869
MiTek USA, Inc. FL Cert 6634
6904 Parke East Blvd. Tampa FL 33610
Date:

June 29,2020

WARNING - Verify design parameters and READ NOTES ON THIS AND INCLUDED MITEK REFERENCE PAGE MII-7473 rev. 10/03/2015 BEFORE USE.
Design valid for use only with MiTek® connectors. This design is based only upon parameters shown, and is for an individual building component, not a truss system. Before use, the building designer must verify the applicability of design parameters and properly incorporate this design into the overall building design. Bracing indicated is to prevent buckling of individual truss web and/or chord members only. Additional temporary and permanent bracing is always required for stability and to prevent collapse with possible personal injury and property damage. For general guidance regarding the fabrication, storage, delivery, erection and bracing of trusses and truss systems, see *ANSI/TPI1 Quality Criteria, DSB-89 and BCSI Building Component Safety Information* available from Truss Plate Institute, 2670 Crain Highway, Suite 203 Waldorf, MD 20601



6904 Parke East Blvd.
Tampa, FL 36610

202869

Job	Truss	Truss Type	Qty	Ply	CHEAVES CONST. T20589039
85-20	V4	GABLE	1	1	Job Reference (optional)

Manatee lumber, BRADENTON FL 8.130 s Mar 11 2018 MiTek Industries, Inc. Mon Jun 29 09:49:53 2020 Page 1
ID:U7NZd4T9PbvFIPkYGJkq_HzAJWI-sKy?UefHbafvplimOASt5ZEMOWZBFqMuFIocf3z1Sni

3-5-8 | 6-11-0
3-5-8 | 3-5-8

Scale = 1:12.7

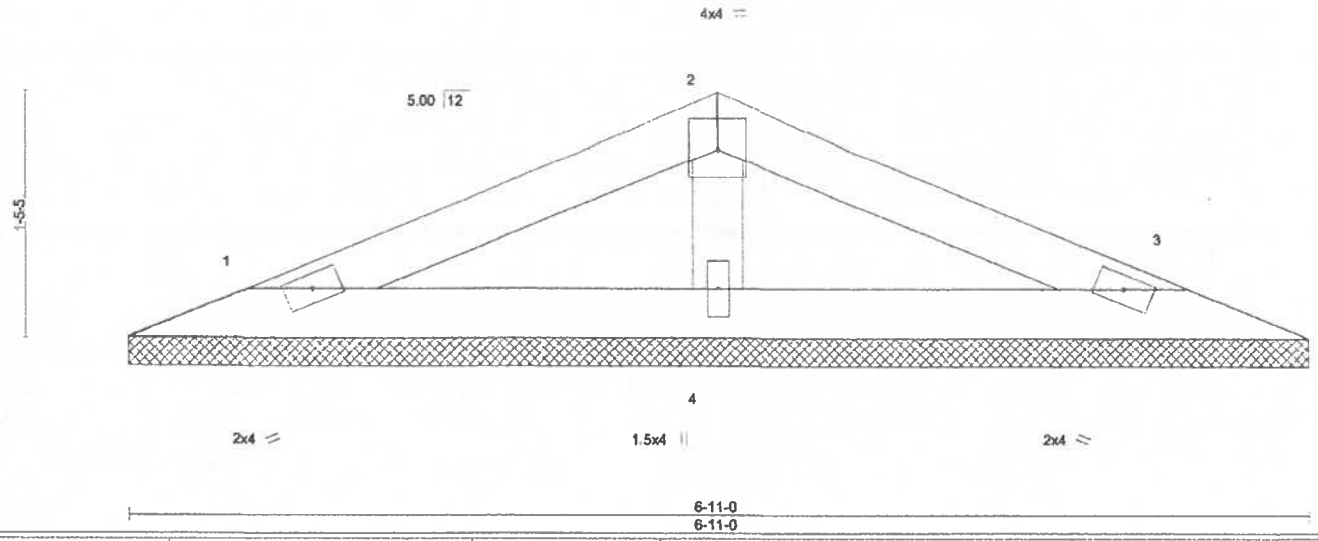

6-11-0
6-11-0

LOADING (psf)		SPACING-	2-0-0	CSI.		DEFL.	in	(loc)	l/defl	L/d	PLATES	GRIP
TCLL	20.0	Plate Grip DOL	1.25	TC	0.15	Vert(LL)	n/a	-	n/a	999	MT20	244/190
TCDL	17.0	Lumber DOL	1.25	BC	0.08	Vert(CT)	n/a	-	n/a	999		
BCLL	0.0 *	Rep Stress Incr	YES	WB	0.03	Horz(CT)	0.00	3	n/a	n/a		
BCDL	10.0	Code FBC2017/TPI2014		Matrix-P							Weight: 20 lb	FT = 0%

LUMBER-
TOP CHORD 2x4 SP No.2
BOT CHORD 2x4 SP No.2
OTHERS 2x4 SP No.2

BRACING-
TOP CHORD Structural wood sheathing directly applied or 6-0-0 oc purlins.
BOT CHORD Rigid ceiling directly applied or 10-0-0 oc bracing.

REACTIONS. (lb/size) 1=127/6-11-0, 3=127/6-11-0, 4=258/6-11-0
Max Horz 1=26(LC 9)
Max Uplift 1=-39(LC 10), 3=-39(LC 10), 4=-52(LC 10)

FORCES. (lb) - Max. Comp./Max. Ten. - All forces 250 (lb) or less except when shown.

NOTES-
1) Unbalanced roof live loads have been considered for this design.
2) Wind: ASCE 7-10; Vult=150mph (3-second gust) Vasd=116mph; TCDL=2.0psf; BCDL=2.0psf; h=14ft; B=45ft; L=40ft; eave=2ft; Cat. II; Exp B; Encl., GCpi=0.18; MWFRS (directional) and C-C Exterior(2) zone;C-C for members and forces & MWFRS for reactions shown; Lumber DOL=1.60 plate grip DOL=1.60
3) Truss designed for wind loads in the plane of the truss only. For studs exposed to wind (normal to the face), see Standard Industry Gable End Details as applicable, or consult qualified building designer as per ANSI/TPI 1.
4) Gable requires continuous bottom chord bearing.
5) Gable studs spaced at 2-0-0 oc.
6) This truss has been designed for a 10.0 psf bottom chord live load nonconcurrent with any other live loads.
7) * This truss has been designed for a live load of 20.0psf on the bottom chord in all areas where a rectangle 3-6-0 tall by 2-0-0 wide will fit between the bottom chord and any other members.
8) Provide mechanical connection (by others) of truss to bearing plate capable of withstanding 100 lb uplift at joint(s) 1, 3, 4.



Julius Lee PE No.34869
MiTek USA, Inc. FL Cert 6634
6904 Parke East Blvd. Tampa FL 33610
Date:

June 29,2020

WARNING - Verify design parameters and READ NOTES ON THIS AND INCLUDED MITEK REFERENCE PAGE MII-7473 rev. 10/03/2015 BEFORE USE.
Design valid for use only with MiTek® connectors. This design is based only upon parameters shown, and is for an individual building component, not a truss system. Before use, the building designer must verify the applicability of design parameters and properly incorporate this design into the overall building design. Bracing indicated is to prevent buckling of individual truss web and/or chord members only. Additional temporary and permanent bracing is always required for stability and to prevent collapse with possible personal injury and property damage. For general guidance regarding the fabrication, storage, delivery, erection and bracing of trusses and truss systems, see *ANSI/TPI Quality Criteria, DSB-89 and BCSI Building Component Safety Information* available from Truss Plate Institute, 2670 Crain Highway, Suite 203 Waldorf, MD 20601

MiTek
6904 Parke East Blvd.
Tampa, FL 33610

Symbols

PLATE LOCATION AND ORIENTATION

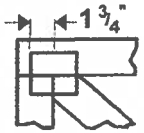

Center plate on joint unless x, y offsets are indicated. Dimensions are in ft-in-sixteenths. Apply plates to both sides of truss and fully embed teeth.

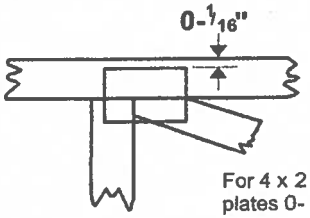

For 4 x 2 orientation, locate plates 0- 1/16" from outside edge of truss.

This symbol indicates the required direction of slots in connector plates.

*** Plate location details available in MiTek 20/20 software or upon request.**

PLATE SIZE

4 x 4

The first dimension is the plate width measured perpendicular to slots. Second dimension is the length parallel to slots.

LATERAL BRACING LOCATION



Indicated by symbol shown and/or by text in the bracing section of the output. Use T or I bracing if indicated.

BEARING

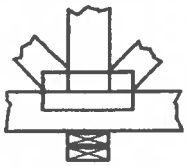

Indicates location where bearings (supports) occur. Icons vary but reaction section indicates joint number where bearings occur. Min size shown is for crushing only.

Industry Standards:

ANSI/TPI1: National Design Specification for Metal Plate Connected Wood Truss Construction.
DSB-89: Design Standard for Bracing.
BCSI: Building Component Safety Information, Guide to Good Practice for Handling, Installing & Bracing of Metal Plate Connected Wood Trusses.

Numbering System

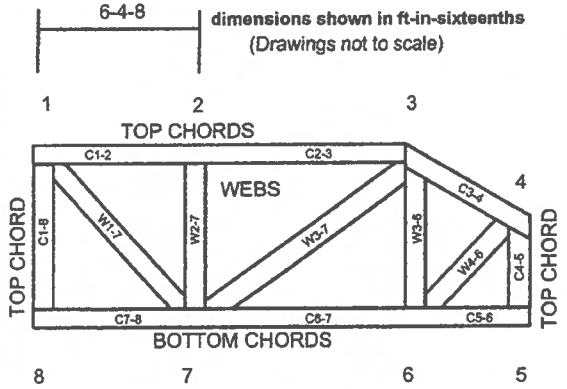

JOINTS ARE GENERALLY NUMBERED/LETTERED CLOCKWISE AROUND THE TRUSS STARTING AT THE JOINT FARTHEST TO THE LEFT.

CHORDS AND WEBS ARE IDENTIFIED BY END JOINT NUMBERS/LETTERS.

PRODUCT CODE APPROVALS

ICC-ES Reports:

ESR-1311, ESR-1352, ESR1988
ER-3907, ESR-2362, ESR-1397, ESR-3282

Trusses are designed for wind loads in the plane of the truss unless otherwise shown.

Lumber design values are in accordance with ANSI/TPI 1 section 6.3 These truss designs rely on lumber values established by others.

© 2012 MiTek® All Rights Reserved

MiTek®

MiTek Engineering Reference Sheet: MII-7473 rev. 5/19/2020

General Safety Notes

Failure to Follow Could Cause Property Damage or Personal Injury

1. Additional stability bracing for truss system, e.g. diagonal or X-bracing, is always required. See BCSI.
2. Truss bracing must be designed by an engineer. For wide truss spacing, individual lateral braces themselves may require bracing, or alternative T or I bracing should be considered.
3. Never exceed the design loading shown and never stack materials on inadequately braced trusses.
4. Provide copies of this truss design to the building designer, erection supervisor, property owner and all other interested parties.
5. Cut members to bear tightly against each other.
6. Place plates on each face of truss at each joint and embed fully. Knots and wane at joint locations are regulated by ANSI/TPI 1.
7. Design assumes trusses will be suitably protected from the environment in accord with ANSI/TPI 1.
8. Unless otherwise noted, moisture content of lumber shall not exceed 19% at time of fabrication.
9. Unless expressly noted, this design is not applicable for use with fire retardant, preservative treated, or green lumber.
10. Camber is a non-structural consideration and is the responsibility of truss fabricator. General practice is to camber for dead load deflection.
11. Plate type, size, orientation and location dimensions indicated are minimum plating requirements.
12. Lumber used shall be of the species and size, and in all respects, equal to or better than that specified.
13. Top chords must be sheathed or purlins provided at spacing indicated on design.
14. Bottom chords require lateral bracing at 10 ft. spacing, or less, if no ceiling is installed, unless otherwise noted.
15. Connections not shown are the responsibility of others.
16. Do not cut or alter truss member or plate without prior approval of an engineer.
17. Install and load vertically unless indicated otherwise.
18. Use of green or treated lumber may pose unacceptable environmental, health or performance risks. Consult with project engineer before use.
19. Review all portions of this design (front, back, words and pictures) before use. Reviewing pictures alone is not sufficient.
20. Design assumes manufacture in accordance with ANSI/TPI 1 Quality Criteria.
21. The design does not take into account any dynamic or other loads other than those expressly stated.

202869

EXHIBIT "J"
Building Permit Issued for a Single-Family Residence

BUILDING PERMIT

CITY OF BRADENTON BUILDING DIVISION

PERMIT #: 202869 DATE: 08/26/2020

Permit Type: NEW 1&2 FAMILY & TOWNHOUSE
Site Address: 1710 MANATEE AVE EAST BRADENTON FL
Owner: MRT SOLUTIONS LLC
Lot:

Flood Zone:X
BFE: BEG 109.5 FT E & 25 FT S OF THE INT LINE OF ACADEMY & GRIFFI
Permit Issued By: RM

Contractor: CHEAVES MASONRY & CONST
License No:
Telephone: 941-737-3784
Subcontractors: CHEAVES MASONRY & CONST

Mechanical: OCEAN-AIRE CONDITIONING
Plumbing: LOGAN PLBG INC
Roofing: OTIS JOINER ROOFING CONTRACTING INC

Electrical: TRACE ELECTRIC INC

CONST. OF NEW SINGLE FAMILY RESIDENCE - (1) BED (2) BATHS 2822SQFT

****NOTES AND CONDITIONS****

BUILDING:	HURRICANE STRAPPING	**ELECTRICAL:**	**GAS:**
	ANCHOR BOLTS		
FOUNDATION	DOWEL ROD	ENCASED GROUND	ROUGH-IN
FLOOR	WINDOW BUCK	TUG	FINAL
COLUMN	FIRE SEP. WALL	ROUGH-IN	**MECHANICAL:**
LINTEL	MH TIE DOWN	TEMPORARY	
ROOF SHEATHING	LATHE NAILING	FINAL	ROUGH-IN
WALL SHEATHING	POOL DECK PDB	**PLUMBING:**	FINAL
LATHE NAILING	FINAL		**DRIVEWAY:**
ROOF DRY-IN	ZONING	ROUGH-IN	
ROOF IN PROG.		TUB SET	PRE POUR
FRAMING	**FIRE:** #1:	FINAL	CULVERT
WALL/CEILING INSULATION	#2:		FINAL

WARNING TO OWNER: YOUR FAILURE TO RECORD A NOTICE OF COMMENCEMENT MAY RESULT IN YOUR PAYING TWICE FOR IMPROVEMENTS TO YOUR PROPERTY. IF YOU INTEND TO OBTAIN FINANCING, CONSULT WITH YOUR LENDER OR AN ATTORNEY BEFORE RECORDING YOUR NOTICE OF COMMENCEMENT. A NOTICE OF COMMENCEMENT MUST BE RECORDED AND POSTED ON THE JOB SITE BEFORE THE FIRST INSPECTION.

THIS PERMIT SHALL BECOME VOID IF WORK HAS NOT STARTED WITHIN SIX MONTHS OF THE ISSUE DATE OF PERMIT OR IF WORK HAS BEEN SUSPENDED LONGER THAN SIX MONTHS.

48 HOURS BEFORE YOU DIG CALL SUNSHINE 1-800-432-4770 IT'S THE LAW IN FLORIDA

NOTICE: Your construction project will require at the minimum the inspection types that are required by code. There may be additional inspections required by the Inspector.

CALL (941) 932-9423 For Building and Zoning Inspections
CALL (941) 708-6300 For Public Works Inspections
CALL (941) 932-9600 For Fire Inspections

INSPECTIONS CODE:

CALL (941) 932-9600 For Fire Inspections

(1) BUILDING INSPECTIONS:

101*	BFT	BUILDING FOOTING
102*	BMN	MONO
103*	BFL	FLOOR
104*	BCL	COLUMN
105*	BLI	LINTEL
106	BRS	ROOF SHEATHING NAILING
107	BWS	WALL SHEATHING NAILING
108	BFR	FRAME
109	BHS	HURRICANE STRAPPING
110	BWI	WALL INSULATION
111	BRB	RADIANT BARRIER
112	BIS	INSULATION COMPLETE
113	BCI	CEILING INSULATION
114	BFJ	FLOOR JOIST
115	BTD	TIE DOWN (MOBILE HOME)
116	BRC	ROOF COVERING
117	BFI	FINAL
119	BFD	FIRE DAMAGE
122*	BSC	SEAWALL CAP
124*	BBE	BUILDING BEAM
125	BCJ	CEILING JOIST
126*	BCP	COLUMN PAD
127*	BIF	INTERIOR FOOTING
130*	BPC	PILE CAP
132*	BRP	ROOF IN PROGRESS
134	BSD	SIDING NAILING
135	BST	STAIRS
137	BDR	DOWEL ROD
138	BAB	ANCHOR BOLTS
139*	BDFP	COMBINED DRY-IN/FLASHING& IN PROGRESS
140*	BRDF	ROOF DRY-IN FLASHING
141	BWB	WINDOW BUCKS
142	BFSW	FIRE SEPARATION WALL ATTACHMENT
143*	BFPW	FORMED AND POURED WALLS
144*	BPI	PILE
145*	BRI	ROOF INSULATION
146	BLN	BUILDING LATH NAILING
152	BTA	U TRACK ATTACHMENT
155	BWDF	WALL DRY IN FLASHING

DRIVEWAY INSPECTIONS RESIDENTIAL ONLY

148	BDF	BUILDING DRIVE FINAL
150	BDPP	BUILDING DRIVE PRE-POUR

* MAY REQUEST AM OR PM INSPECTIONS

(2) ELECTRICAL INSPECTIONS:

201	ETP	TEMP POLE
202	ETG	TEMP UNDERGROUND
203	ESL	SLAB
204	ERI	ROUGH IN
205	EFI	ELECTRICAL FINAL
206	EWL	WALL
207	ECL	CEILING
208	ESC	SERVICE CHANGE
209	EFD	FIRE DAMAGE
212	ESI	SERVICE INTERRUPTION
219*	ECEG	CONCRETE ENCASED GROUND
218	EUGD	UNDERGROUND

(3) MECHANICAL INSPECTIONS:

301	MRI	ROUGH IN
302	MFI	FINAL
303	MGRI	GAS ROUGH IN
304	MGFI	GAS FINAL
305	MFD	FIRE DAMAGE
306	MUG	UNDERGROUND

(4) PLUMBING INSPECTIONS:

401	PR1	PLUMBING UNDERGROUND
402	PR2	PLUMBING ROUGH
403	PSE	SEWER
404	PWS	WATER SERVICE
405	PFI	FINAL
406	PGT	GREASE TRAP
407	PFD	FIRE DAMAGE

(5) SWIMMING POOL INSPECTIONS:

120*	BPS	POOL STEEL
121*	BPD	POOL DECK
117	BFI	BUILDING FINAL/CHILD SAFETY
216*	EPSB	POOL STEEL BONDING
217*	EPDB	POOL DECK BONDING
410	PPUG	POOL UNDERGROUND PIPE
411	PPM	POOL MAIN DRAIN

(6) OTHER INSPECTIONS:

500	ALL PUBLIC WORKS
919	ALL ZONING INSPECTIONS

EXHIBIT "K"
Final Survey Submitted for a Single-Family Residence

RECORDS

RECEIVED
MAY 10 2021
CITY OF BRADENTON
PLANNING DEPT.

Building Department
101 Old Main St. Bradenton, FL 34205
Email: Permitting@cityofbradenton.com
Ph: 941-932-9400

DATE: 5/10/21

Please check box that applies:

- ☐ **Plan Amendment to Issued Permit**
- ☐ **Plan Amendment to Non-Issued Permit**
- ☐ **Requested Information for Plans Review**

To: Zelda.

Contact Person: Richard Cheaves

Phone #: 941) 737-3784

Email Address: cheaves masonry @ yahoo.com

Permit #: # 202869

Project Address: 1210 Manatee Ave. E Bradenton, FL 34208

Submittal Sequence #:

Submittal Description:

Final Survey

OFFICIAL USE ONLY:

RECEIVED BY: Cassandra Taylor

REVIEW: BLDG 3b MECH____ ELEC____ PLMG____ FIRE____ ZONING____ FLOOD____ PW____

5/10/2021
RECEIVED

REV. 08 20 R MOK

PERMIT # 202869

CLEMENTS SURVEYING, INC.
509 8th Avenue West, Ste. 140
Palmetto, Florida 34221
Phone: 729-6690 Fax: 729-7580

MEMBER OF:
Florida Society Of Professional Surveyors & Mappers
Manatee County Chamber of Commerce
Manasota Chapter Of Professional Surveyors & Mappers

BOUNDARY SURVEY OF LOT - BLOCK - SUBDIVISION SEE DESCRIPTION
SECTION 30 TOWNSHIP 34 SOUTH, RANGE 18 EAST, AS RECORDED IN PLAT BOOK - PAGES -
OF THE PUBLIC RECORDS OF MANATEE COUNTY, FLORIDA PARCEL ID # 1270500000 CURRENT ZONING N/A
PROPERTY ADDRESS: 1710 MANATEE AVENUE EAST, BRADENTON, FLORIDA 34208

RECEIVED MAY 10 2021 CITY OF BRADENTON PLANNING DEPT.

SCALE 1"= 30'

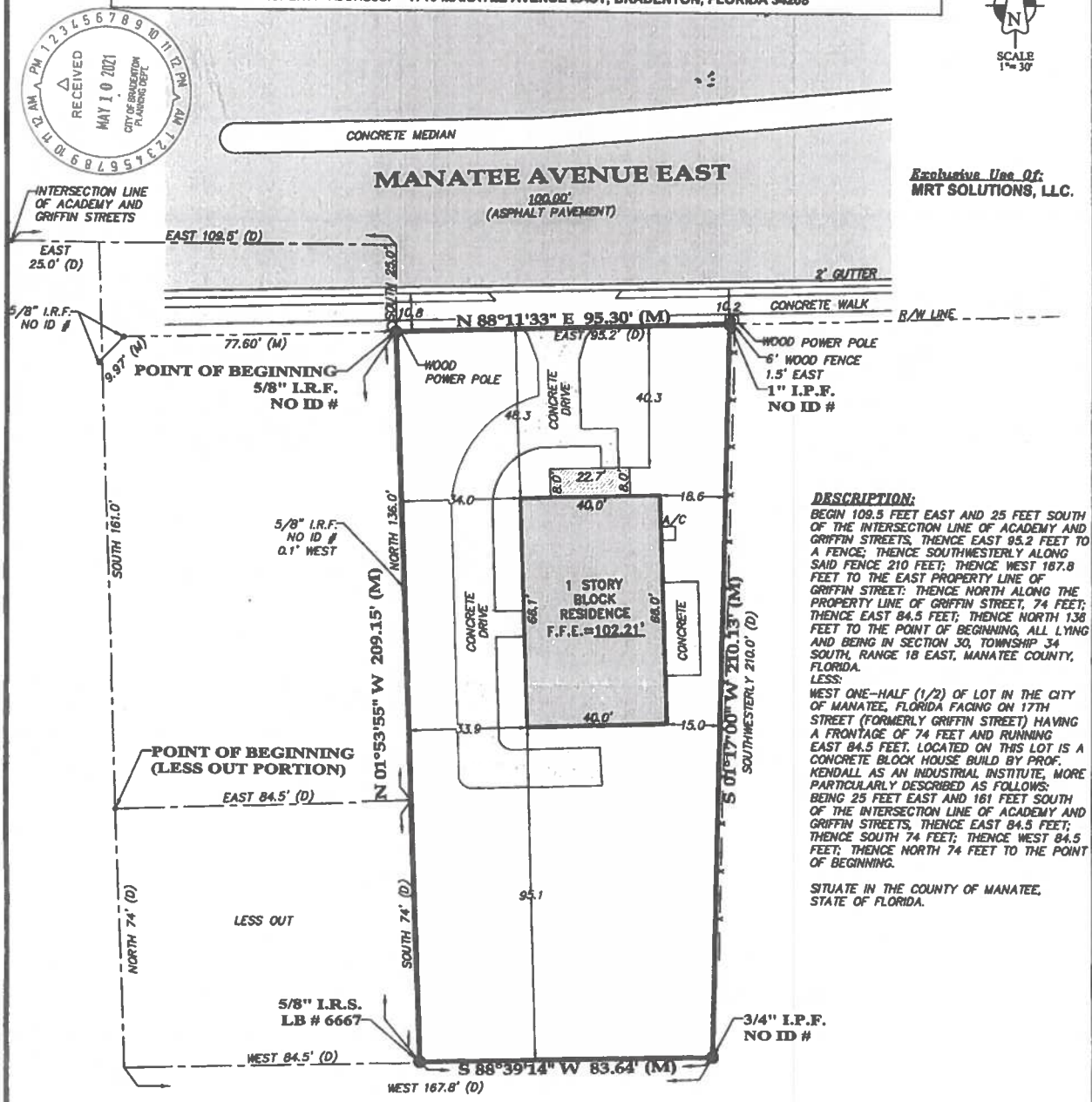

Exclusive Use Of:
MRT SOLUTIONS, LLC.

DESCRIPTION:

BEGIN 109.5 FEET EAST AND 25 FEET SOUTH OF THE INTERSECTION LINE OF ACADEMY AND GRIFFIN STREETS, THENCE EAST 95.2 FEET TO A FENCE; THENCE SOUTHWESTERLY ALONG SAID FENCE 210 FEET; THENCE WEST 167.8 FEET TO THE EAST PROPERTY LINE OF GRIFFIN STREET; THENCE NORTH ALONG THE PROPERTY LINE OF GRIFFIN STREET, 74 FEET; THENCE EAST 84.5 FEET; THENCE NORTH 138 FEET TO THE POINT OF BEGINNING, ALL LYING AND BEING IN SECTION 30, TOWNSHIP 34 SOUTH, RANGE 18 EAST, MANATEE COUNTY, FLORIDA.

LESS:

WEST ONE-HALF (1/2) OF LOT IN THE CITY OF MANATEE, FLORIDA FACING ON 17TH STREET (FORMERLY GRIFFIN STREET) HAVING A FRONTAGE OF 74 FEET AND RUNNING EAST 84.5 FEET. LOCATED ON THIS LOT IS A CONCRETE BLOCK HOUSE BUILD BY PROF. KENDALL AS AN INDUSTRIAL INSTITUTE; MORE PARTICULARLY DESCRIBED AS FOLLOWS: BEING 25 FEET EAST AND 161 FEET SOUTH OF THE INTERSECTION LINE OF ACADEMY AND GRIFFIN STREETS, THENCE EAST 84.5 FEET; THENCE SOUTH 74 FEET; THENCE WEST 84.5 FEET; THENCE NORTH 74 FEET TO THE POINT OF BEGINNING.

SITUATE IN THE COUNTY OF MANATEE, STATE OF FLORIDA.

NOTES:

BEARINGS ARE BASED ON THE SOUTHERLY RIGHT OF WAY LINE OF MANATEE AVENUE EAST, BEING N88°11'33"E (GRID), UTILIZING THE FLORIDA PERMANENT REFERENCE NETWORK (FLORIDA WEST ZONE).

ELEVATIONS SHOWN ARE BASED ON THE CENTERLINE OF MANATEE AVENUE EAST, BEING ASSUMED AT 100.00'.

PROPERTY LIES WITHIN FLOOD ZONE "X", AS PER FLOOD INSURANCE RATE MAP PANEL NO. 12081C0306E, DATED 03-17-14, (SUBJECT TO VERIFICATION).

THIS SURVEY WAS PREPARED WITHOUT THE BENEFIT OF A CURRENT TITLE REPORT, THEREFORE IS SUBJECT TO ALL RESTRICTIONS, EASEMENTS AND RIGHTS OF WAY OF RECORD, IF ANY.

UTILITIES SHOWN HEREON ARE ABOVE GROUND (VISIBLE) UTILITIES ONLY, NO UNDERGROUND UTILITIES, IF ANY WERE LOCATED FOR THE PURPOSE OF THIS SURVEY.

JAMES L. CLEMENTS LICENSE NUMBER No. 4091 STATE OF FLORIDA PROFESSIONAL SURVEYOR & MAPPER

Job No. 2020-386
Boundary 11-12-20 FB 273 PG 21 Other:
Foundation 12-03-20 FB 274 PG 15 Other:
Final 04-26-21 FB LL PG Revision:
Update FB PG Revision:
Drawn By JJ/JC

CERTIFICATION OF SURVEYOR
BY: James L. Clements
JAMES L. CLEMENTS, P.S.M. # 4091
Licensed Business No. 6667
DATE OF CERTIFICATION 5-4-21

NOT VALID WITHOUT THE SIGNATURE AND THE ORIGINAL RAISED SEAL OF A FLORIDA LICENSED SURVEYOR AND MAPPER

LEGEND

(M)=Measured (P)=Plat (D)=Deed (R) = Radial
○=Iron Rod Set(IRS)#6667 ●=Iron Pipe Found (IPF)
TBM=Temporary Bench Mark POB=Point Of Beginning
CMS=Concrete Monument Set #6667 R/W=Right Of Way
P.T.=Point of Tangent P.C.=Point Of Curve
PCC=Point of Compound Curve ~~=Water Flow
CMF=Concrete Monument Found N&D=Nail and Disc
PRM=Permenent Reference Monument ○ =Proposed Elevation
⊖=Iron Rod Found(IRF)
PRC=Point of Reverse Curve
POC=Point Of Commencement
0.00' =Existing Elevation

EXHIBIT "L"
Certificate of Occupancy for a Single-Family Residence

CERTIFICATE OF OCCUPANCY
CITY OF BRADENTON

BUILDING AND CONSTRUCTION DIVISION
101 12th Street West, Bradenton, FL 34205
941-932-9400

PERMIT NUMBER:	202869	OCCUPANCY/USE:	R-3
ADDRESS:	1710 MANATEE AVE EAST BRADENTON FL	CONSTRUCTION:	TYPE VB
OWNER NAME:	MRT SOLUTIONS LLC	DESIGN OCCUPANT LOAD:	N/A
OWNER ADDRESS:	11811 ERIE RD	SPRINKLER REQUIRED:	N/A
	PARRISH, FL 34219	SPRINKLER PROVIDED:	N/A
DESCRIPTION:	CONST. OF NEW SINGLE FAMILY RESIDENCE - (1) BED (2) BATHS 2822SQFT		
FLOOD ZONE:	X OTHER FLOOD AREA	DATE ISSUED:	05/14/2021

STIPULATIONS:

DOCUMENTATION OF THE AS-BUILT LOWEST FLOOR ELEVATION HAS BEEN PROVIDED AND IS RETAINED IN THE RECORDS OF THE AUTHORITY HAVING JURISDICTION.

THE STRUCTURE OR PORTION OF STRUCTURE NAMED HEREIN HAS BEEN INSPECTED FOR COMPLIANCE WITH THE 2020 7TH EDITION OF THE FLORIDA BUILDING CODE, FOR THE OCCUPANCY OR DIVISION OF OCCUPANCY AND USE CLASSIFICATION PROPOSED.

CITY OF BRADENTON
ISSUED BY
THE BUILDING OFFICIAL
PATRICK L. WENZEL, CBO

EXHIBIT "M"
Property Owner/City Staff Emails about Other Use Types

Date : 6/4/2021 8:18:18 AM
From : Myra.Schwarz@cityofbradenton.com
To : nsjaxon@msn.com
Subject : RE: [EXTERNAL] Land usage
Attachment : Table 4.7 Specific Function & Use.pdf;

You're welcome!
Keep thinking- there are other uses in T4-O that you may find a way to work for you. The use table is attached.

Myra

Myra R. Schwarz, CNU-a
City of Bradenton
Senior Planner
101 Old Main Street
Bradenton, FL 34205
(941)932-9403

-----Original Message-----
From: niketa jackson <nsjaxon@msn.com>
Sent: Friday, June 4, 2021 6:53 AM
To: Myra Schwarz <Myra.Schwarz@cityofbradenton.com>
Subject: Re: [EXTERNAL] Land usage

[EXTERNAL EMAIL] This email originated from outside the City's email system, therefore the authenticity of the sender cannot be established. Exercise caution before clicking links, opening attachments or responding.

Okay. Thank you so much for your help.

Best regards,
Niketa

> On Jun 3, 2021, at 4:07 PM, Myra Schwarz <myra.schwarz@cityofbradenton.com> wrote:
>
> So you mean a commercial venue for personal events? That most closely meets a Conference Center use in the Form-based Code Functions, and isn't a permitted use in T4-O. Private events, like birthday parties, showers, etc, for friends and family are not considered a use, but if it becomes a commercial venue, then it may not be permitted at this location.
>
> Myra
>
> Myra R. Schwarz, CNU-a
> City of Bradenton
> Senior Planner
> 101 Old Main Street
> Bradenton, FL 34205
> (941)932-9403
>
> -----Original Message-----
> From: niketa jackson <nsjaxon@msn.com>
> Sent: Thursday, June 3, 2021 3:47 PM
> To: Myra Schwarz <Myra.Schwarz@cityofbradenton.com>
> Subject: Re: [EXTERNAL] Land usage
>
> [EXTERNAL EMAIL] This email originated from outside the City's email system, therefore the authenticity of the sender cannot be established. Exercise caution before clicking links, opening attachments or responding.

>
> The light commercial would be for a small event space in the open area. It would be available for small birthday parties, baby showers, etc. No alcohol. Is that permitted?
>
> Thank you,
> Niketa
>
>
>> On Jun 3, 2021, at 8:51 AM, Myra Schwarz <myra.schwarz@cityofbradenton.com> wrote:
>>
>> Good morning Niketa,
>> A live-work unit may be permitted in the T4-O zoning that your property is in. The definition of a Live-Work unit is: a Mixed Use unit consisting of a Commercial and Residential Function. The Commercial Function may be anywhere in the unit. It is intended to be occupied by a business operator who lives in the same structure that contains the Commercial activity or industry.
>>
>> What is the light commercial use that you intend? Let's make certain that it's permitted in T4-O zoning.
>>
>> The process would start with a pre-application review. Building and Fire will need to advise you as to what, if any, changes must be made to the structure in order to become a Live-work unit. Application is attached.
>>
>> Myra
>>
>> Myra R. Schwarz, CNU-a
>> City of Bradenton
>> Senior Planner
>> 101 Old Main Street
>> Bradenton, FL 34205
>> (941)932-9403
>>
>> -----Original Message-----
>> From: Niketa Jackson <nsjaxon@msn.com>
>> Sent: Wednesday, June 2, 2021 11:21 PM
>> To: Myra Schwarz <Myra.Schwarz@cityofbradenton.com>
>> Subject: [EXTERNAL] Land usage
>>
>> [EXTERNAL EMAIL] This email originated from outside the City's email system, therefore the authenticity of the sender cannot be established. Exercise caution before clicking links, opening attachments or responding.
>>
>> Hello Myra,
>>
>> Sorry to bother you again, but I have a question about future land use. I am trying to get prepared for the future. I would like to maintain the residential use of the property located at 1710 Manatee Ave. E. Bradenton in addition to light commercial use.
>>
>> Where and how do I get the Land use application and what's the process please?
>>
>> Thank you,
>> Niketa
>>
>> _____
>>
>> Florida has a very broad Public Records Law. This agency is a public entity and is subject to Chapter 119 of the Florida Statutes, concerning public records. E-mail communications are covered under such laws & therefore e-mail sent or received on this entity's computer system, including your e-mail address, may be disclosed to the public or media upon request.
>>
>> The City of Bradenton shall not be held liable for use of ANY map or drawing attachment, which is provided as a public service for informational purposes. PLEASE NOTE that this information is NOT

intended to be used as an authoritative public record for any geographic location, or as a legal document and shall have no legal force or effect. The City of Bradenton makes reasonable efforts to provide that data sent as an attachment is virus free, however the City of Bradenton assumes no responsibility for damages caused by the downloading or installation of this data. In addition certain individuals or entities may have proprietary interests in such data and the use of it without such parties' consent may be prohibited. Viewing or Use of the data indicates that user accepts the above conditions.
>> <Pre-Application_Review 02-2021.pdf>

TABLE 4.7: Specific Function & Use. This table delegates specific Functions and uses within Transect Zones.

a. RESIDENTIAL	T3	T4-R	T4-O	T5	T6	SD
Multi-Family		P	P	P	P	
Single Family Attached		P	P	P	P	
Single Family Semi-Detached		P	P	P		
Single Family Detached	P	P	P	P		
Accessory Unit	P	P	P	P		
b. LODGING						
Hotel (no room limit)				P	P	SU
Inn (up to 10 rooms)		SU	SU	P	P	
Bed & Breakfast (up to 6 rooms)	SU	P	P	P		
Boarding House		SU	SU	SU	SU	SU
School Dormitory	SU	P	P	P	P	P
c. OFFICE						
Office Building			P	P	P	SU
Live-Work Unit		P	P	P	P	SU
d. RETAIL						
Special Events		SU	SU	SU	SU	P
Retail Building			P	P	P	SU
Display Gallery			P	P	P	SU
Restaurant			P	P	P	SU
Kiosk			P	P	P	SU
Cafe/Sidewalk Cafe<20 seats[1]			P	P	P	P
Push Cart				SU	SU	SU
Lounge			SU	SU	SU	SU
e. CIVIC						
Convention Center				SU	SU	P
Conference Center				SU	P	P
Exhibition Center			SU	SU	SU	P
Fountain or Public Art	P	P	P	P	P	P
Library		P	P	P	P	P
Live Theater			P	P	P	P
Movie Theater			P	P	P	P
Museum			SU	P	P	P
Indoor Amusement Center			SU	SU	SU	SU
Outdoor Amusement Center			SU	SU	SU	SU
Outdoor Auditorium			SU	P	P	P
Passenger Terminal			SU	SU	SU	P
Playground	P	P	P	P	P	P
Sports Stadium			SU	SU	SU	P
Surface Parking Lot		P	P	P	P	P
Club		SU	SU			SU
Religious Assembly[3]	SU	P	P	P	P	P

f. OTHER: URBAN FARMING	T3	T4-R	T4-O	T5	T6	SD
Grain/Food Storage						P
Greenhouse < 200 sq. ft.	P	P	P			P
Veterinary Clinic		P	P	P	SU	P
g. OTHER: AUTOMOTIVE						
Service Station/Repair				SU		SU
Car Wash						P
Auto Sales/Rental				SU		P
Drive -Through Facility				SU	SU	P
Parking Lot/Garage			P	P	P	SU
Automotive Specialty				SU		SU
Shopping Center						SU
Shopping Mall						SU
h. OTHER: CIVIL SUPPORT						
Fire Station	SU	SU	P	P	P	P
Police Station	SU	SU	P	P	P	P
Cemetery	SU	SU	SU	SU	SU	P
Funeral Home			SU	P	P	P
Hospital				SU	SU	P
Medical Clinic		P	P	P	P	P
Marina		SU	SU	SU	SU	SU
i. OTHER: EDUCATION						
College			SU	SU	SU	P
Schools, Public & Private[3]	SU	SU	SU	SU	SU	P
Business Training Schools			P	P	P	P
Educational	SU	SU	SU	SU	SU	SU
Cultural			SU	SU	SU	SU
Other- Childcare Center*[2][3]	SU	SU	SU	SU	SU	SU
j. OTHER: INDUSTRIAL						
Heavy Industrial Facility						P
Light Industrial Facility			SU	SU		P
Laboratory Facility			SU	SU		P
Water Supply Facility						P
Sewer and Waste Facility						P
Electric Substation	SU	SU	SU	SU	SU	P
Wireless Transmitter			SU	SU	SU	SU
Cremation Facility						P
Warehouse			SU	SU		P
Produce Storage						P
Heating & Fuel Storage						P
Ice Plant				SU		SU
Mini-Storage			SU			P

P = PERMITTED SU = SPECIAL USE BLANK = NOT ALLOWED

1. City Council approval may be required. Refer to LUR Sections 2.2.10 and 4.3.1 for alcoholic beverage sales and approval requirements. Establishments with alcoholic beverage sales are exempt from distance separation requirements from Religious Assembly uses.
2. Adult and child day care centers with six or fewer clients and "Family Day Care Home" as defined and licensed by HRS are exempt from zoning requirements.
3. Adult Entertainment Establishments cannot be located within 500 feet of any day care center, school, or religious assembly use.

EXHIBIT "N"
Code Enforcement Violation of Event Center

City of Bradenton

COMPLAINTS/VIOLATIONS PROFILE

GENERAL COMPLAINTS/VIOLATIONS

Reference	32800
Case reference	
Parcel	1270500000
Location	1710 MANATEE AVE EAST
Between	
Location desc	
Municipality	BRADENTON
Area	
Use	1000
Zone	
Subdivision	NOT IN SUBDIVISION
Property Owner	MRT SOLUTIONS LLC
Address	1710 MANATEE AVE E BRADENTON, FL 34208
Phone	941-737-6143
Originating Dept	CODE ENFORCEMENT
Responsible Dept	CODE ENFORCEMENT
Inspector Name	MICHAEL MAGINNESS
Init Inspection	
Source	MANUAL
Complaint source	EMA EMAIL
Comment	
Date reported	02/20/2024
Severity	0
Status	OPEN
Created	02/20/2024 by 5075vrei
Comply by	
Complied	by

COMPLAINTS/VIOLATIONS

Ordinance

Complaint/Violation	Comply By	Days	Complied Dt	Severity
ZONING BUSINESS		0		0

Area:

Operating event center without permit. See emails.

COMPLAINTS/VIOLATIONS PROFILE

Reference: 32800 (continued)

CONTACTS

Name/Address	Notice	Resp	Role	Phone
MRT SOLUTIONS LLC 1710 MANATEE AVE E BRADENTON, FL 34208	Y	Y	OWNER	941-737-6143

RESOLUTIONS/ENFORCEMENTS

Step 10
Description INSPECTION
Action type INSPECTION
Status DONE
User status
Correct by
Sched action
Action started
Action complete 02/21/2024 07:17
Action days 1

Comment
Inspection ID 920511 Insp type CODE INSPECTION

Step 11
Description fclet
Action type NOTICE
Status DONE
User status
Correct by
Sched action
Action started
Action complete 02/23/2024

Comment sent F/C letter

Step 12
Description email
Action type NOTICE
Status DONE
User status
Correct by
Sched action
Action started
Action complete 02/23/2024

Comment emailed Niketa Jackson - nsjaxon@gmail.com - asking for copies of emails from Myra about using the property for an event center

Step 13
Description email
Action type NOTICE
Status DONE

COMPLAINTS/VIOLATIONS PROFILE

Reference: 32800 (continued)

User status
Correct by
Sched action
Action started
Action complete 02/27/2024

Comment attached the email from Myra to Niketa stating the use is not permitted

Step 20
Description reins
Action type INSPECTION
Status DONE
User status
Correct by
Sched action
Action started
Action complete 03/04/2024 07:47

Comment letter via Kim
Inspection ID 921496 Insp type CODE RE-INSPECTION

Step 30
Description certl
Action type NOTICE
Status DONE
User status
Correct by
Sched action
Action started
Action complete 03/12/2024

Comment

Step 40
Description rrece
Action type OTHER
Status DONE
User status
Correct by
Sched action
Action started
Action complete 03/22/2024

Comment

Step 50
Description reins
Action type INSPECTION
Status DONE
User status
Correct by
Sched action
Action started
Action complete 04/22/2024 07:44

COMPLAINTS/VIOLATIONS PROFILE

Reference: 32800 (continued)

Comment	violation remains - prep S/M		
Inspection ID	927397	Insp type	CODE RE-INSPECTION

Step	60
Description	nohea
Action type	NOTICE
Status	DONE
User status	
Correct by	
Sched action	
Action started	
Action complete	11/26/2024
Comment	

Step	65
Description	rrece
Action type	OTHER
Status	DONE
User status	
Correct by	
Sched action	
Action started	
Action complete	11/29/2024
Comment	

Step	70
Description	reins
Action type	INSPECTION
Status	DONE
User status	
Correct by	
Sched action	
Action started	
Action complete	12/23/2024 07:40

Comment	Print Letter violations remain		
Inspection ID	961498	Insp type	CODE RE-INSPECTION

Step	80
Description	fof
Action type	OTHER
Status	DONE
User status	
Correct by	
Sched action	
Action started	
Action complete	01/17/2025
Comment	
Step	90

COMPLAINTS/VIOLATIONS PROFILE

Reference: 32800 (continued)

Description rrece
Action type OTHER
Status DONE
User status
Correct by
Sched action
Action started
Action complete 01/24/2025

Comment

Step 100
Description reins
Action type INSPECTION
Status NEW
User status
Correct by
Sched action 07/14/2025
Action started
Action complete

Comment
Inspection ID 961860 Insp type CODE RE-INSPECTION

COMPLAINANTS

Name	Anon	Flup	Cont Date	Cont Time	Response
POWER JR., DONALD	N	N	02/20/24		

INSPECTIONS

Type	Requested	Scheduled	Insptr	Performed	Results	Bal Due
INITIAL IN			MMA	02/21/24	F	.00
sent F/C letter						
RE-INSP			MMA	03/04/24	F	.00
letter via Kim						
RE-INSP			MMA	04/22/24	F	.00
violation remains - prep S/M						
RE-INSP			MMA	12/23/24	F	.00
Print Letter						
violations remain						
RE-INSP		07/14/25	MMA			.00
				TOTAL:		.00

AUDIT HISTORY

Department	Date	Action	Source	Created by
Comments				
CODE ENFORCEMENT	01/02/25	RE-INSP	VIOLATN	5075mmag
12/23/2024 FAIL				
CODE ENFORCEMENT	04/22/24	RE-INSP	VIOLATN	5075mmag
04/22/2024 FAIL				

COMPLAINTS/VIOLATIONS PROFILE

Reference: 32800 (continued)

CODE ENFORCEMENT 03/04/2024 FAIL	03/05/24	RE-INSP	VIOLATN	5075mmag
CODE ENFORCEMENT	03/01/24	EXCEL rep	VIOLATN	5075vrei
CODE ENFORCEMENT 02/21/2024 FAIL	02/23/24	INITIAL IN	VIOLATN	5075mmag
CODE ENFORCEMENT 02/22/2024 FAIL	02/23/24	INITIAL IN	VIOLATN	5075mmag

City of Bradenton

COMPLAINTS/VIOLATIONS PROFILE

GENERAL COMPLAINTS/VIOLATIONS

Reference	6391
Case reference	
Parcel	1270500000
Location	1710 MANATEE AVE EAST
Between	
Location desc	Property mowed.
Municipality	BRADENTON
Area	
Use	1000
Zone	
Subdivision	NOT IN SUBDIVISION
Property Owner	HUNT, ELIZABETH ANN VAN DIVER, DONIA C
Address	215 W GRAND CENTRAL AVE 822 FOREIGN, FL 99999
Phone	
Originating Dept	CODE ENFORCEMENT
Responsible Dept	CODE ENFORCEMENT
Inspector Name	JERMAINE AGURS
Init Inspection	
Source	MANUAL
Complaint source	
Comment	
Date reported	01/26/2017
Severity	0
Status	CLOSED
Created	01/26/2017 by 5075jagu
Comply by	
Complied	02/08/2017 by JERMAINE AGURS

COMPLAINTS/VIOLATIONS

Ordinance

Complaint/Violation	Comply By	Days	Complied Dt	Severity
OVERGROWTH		0	02/08/2017	0

Area:
Vacant lot is overgrown.

COMPLAINTS/VIOLATIONS PROFILE

Reference: 6391 (continued)

CONTACTS

Name/Address	Notice	Resp	Role	Phone
HUNT, ELIZABETH ANN VAN DIVER, DONIA C 215 W GRAND CENTRAL AVE 822 FOREIGN, FL 99999	Y	Y	OWNER	

RESOLUTIONS/ENFORCEMENTS

Step 10
Description INSPECTION
Action type INSPECTION
Status DONE
User status
Correct by
Sched action
Action started
Action complete 01/26/2017
Action days 1

Comment
Inspection ID 378202 Insp type CODE INSPECTION

Step 20
Description fclet
Action type NOTICE
Status DONE
User status
Correct by
Sched action
Action started
Action complete 01/26/2017

Comment

Step 30
Description reins
Action type INSPECTION
Status DONE
User status
Correct by
Sched action
Action started
Action complete 02/08/2017

Comment Property mowed.
Inspection ID 378217 Insp type CODE RE-INSPECTION

INSPECTIONS

Type	Requested	Scheduled	Insptr	Performed	Results	Bal Due
INITIAL IN			JAG	01/26/17	F	.00

COMPLAINTS/VIOLATIONS PROFILE

Reference: 6391 (continued)

Sent overgrowth letter to owner.					
RE-INSP	02/06/17	JAG	02/08/17	P	.00
Property mowed.					
			TOTAL:		.00

AUDIT HISTORY

Department	Date	Action	Source	Created by
Comments				
CODE ENFORCEMENT	02/08/17	RE-INSP	VIOLATN	5075jagu
02/08/2017 PASS				
CODE ENFORCEMENT	02/02/17	EXCEL over	VIOLATN	5075vrei
CODE ENFORCEMENT	01/26/17	INITIAL IN	VIOLATN	5075jagu
01/26/2017 FAIL				

** END OF REPORT - Generated by Greg DeLong **

From: Donald Power
To: Volker Reiss
Subject: [EXTERNAL] People there now
Date: Thursday, February 27, 2025 1:52:08 PM

[EXTERNAL EMAIL] This email originated from outside the City's email system, therefore the authenticity of the sender cannot be established. Exercise caution before clicking links, opening attachments or responding.





Just drove by here is what is going on.
Sent from AOL on Android

Florida has a very broad Public Records Law. This agency is a public entity and is subject to Chapter 119 of the Florida Statutes, concerning public records. E-mail communications are covered under such laws & therefore e-mail sent or received on this entity's computer system, including your e-mail address, may be disclosed to the public or media upon request.

The City of Bradenton shall not be held liable for use of ANY map or drawing attachment, which is provided as a public service for informational purposes. PLEASE NOTE that this information is NOT intended to be used as an authoritative public record for any geographic location, or as a legal document and shall have no legal force or effect. The City of Bradenton makes reasonable efforts to provide that data sent as an attachment is virus free, however the City of Bradenton assumes no responsibility for damages caused by the downloading or installation of this data. In addition certain individuals or entities may have proprietary interests in such data and the use of it without such parties' consent may be prohibited. Viewing or Use of the data indicates that user accepts the above conditions.

UNITED STATES POSTAL SERVICE

Date Produced: 03/25/2024

ConnectSuite Inc.:

The following is the delivery information for Certified Mail™/RRE item number 9214 8901 9403 8352 1896 08. Our records indicate that this item was delivered on 03/22/2024 at 04:12 p.m. in PARRISH, FL 34219. The scanned image of the recipient information is provided below.

Signature of Recipient :

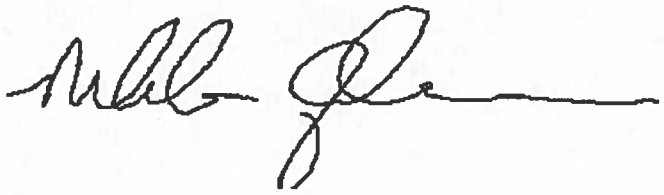

Address of Recipient : 11811 ERIE RD
PARRISH, FL 34219-6510

Thank you for selecting the Postal Service for your mailing needs. If you require additional assistance, please contact your local post office or Postal Service representative.

Sincerely,
United States Postal Service

The customer reference number shown below is not validated or endorsed by the United States Postal Service. It is solely for customer use.

This USPS proof of delivery is linked to the customers mail piece information on file as shown below:

MRT SOLUTIONS LLC
NIKETA JACKSON R A
11811 ERIE RD
PARRISH FL 34219-6510

Customer Reference Number: C4865040.29224061

USPS MAIL PIECE TRACKING NUMBER: 420342196510921489019403835218960 8
MAILING DATE: 03/12/2024
DELIVERED DATE: 03/22/2024
Reference #: 32800
Property Address: 1710 Manatee Ave. E.
Type of Correspondence: Certified Letter

MAIL PIECE DELIVERY INFORMATION:

MRT SOLUTIONS LLC
NIKETA JACKSON R A
11811 ERIE RD
PARRISH FL 34219-6510

MAIL PIECE TRACKING EVENTS:

03/12/2024 10:38	PRE-SHIPMENT INFO SENT USPS AWAITS ITEM	BRADENTON,FL 34205
03/13/2024 23:02	ORIGIN ACCEPTANCE	BRADENTON,FL 34205
03/14/2024 00:17	PROCESSED THROUGH USPS FACILITY	TAMPA,FL 33630
03/15/2024 01:50	PROCESSED THROUGH USPS FACILITY	SARASOTA FL DISTRIBUTION CENTER 34260
03/15/2024 15:37	NO AUTHORIZED RECIPIENT AVAILABLE	PARRISH,FL 34219
03/20/2024 03:25	REMINDER TO SCHEDULE REDELIVERY	PARRISH,FL 34219
03/22/2024 16:12	DELIVERED INDIVIDUAL PICKED UP AT PO	PARRISH,FL 34219

Community Services & Code Compliance Division
101 Old Main Street
Bradenton, FL 34205-6258

Phone: (941) 932-9400
www.cityofbradenton.com

CITY OF BRADENTON
Department of Planning & Community Development

March 12, 2024

MRT Solutions LLC
11811 Erie Road
Parrish, FL 34219

Certified Mail: 9214 8901 9403 8352 1896 08

Dear Property Owner:

Re: Property located at 1710 Manatee Ave. E., Bradenton, FL 34208
ID No. 1270500000
Complaint Ref No. 32800

Our office conducted an inspection of the referenced property on February 21, 2024. At that time the property contained conditions which constitute violations of the City Code of Ordinances. The violation(s) and requirements are as follows:

1. There is an event center being operated from a residential property which is not permitted in Transect Zone T4-O. Table 4.7, Specific Function and Use, of the Bradenton Form-Based Code states that an event center is not allowed in the Transect Zone T4-O.

Please correct the violation(s) within thirty (30) days of receipt of this notice. If compliance is not achieved our department will refer this matter to the Special Magistrate for final dispensation. The Special Magistrate has the power to levy fines up to $250.00 per day. If you have any questions, please visit our website at www.cityofbradenton.com.

Sincerely,

Mike Maginness
Code Enforcement Officer
941-932-9416


Ki - Events
(941) 920-2135
www.kieventsmanatee com
Tours by appointment
02/21/2024 12:34

From: Donald Power
To: Volker Reiss
Subject: [EXTERNAL] Pics of event at location on Sunday
Date: Tuesday, February 20, 2024 9:57:12 AM

You don't often get email from pwrfml@aol.com. Learn why this is important

[EXTERNAL EMAIL] This email originated from outside the City's email system, therefore the authenticity of the sender cannot be established. Exercise caution before clicking links, opening attachments or responding.







Sent from AOL on Android

Florida has a very broad Public Records Law. This agency is a public entity and is subject to Chapter 119 of the Florida Statutes, concerning public records. E-mail communications are covered under such laws & therefore e-mail sent or received on this entity's computer system, including your e-mail address, may be disclosed to the public or media upon request.

The City of Bradenton shall not be held liable for use of ANY map or drawing attachment, which is provided as a public service for informational purposes. PLEASE NOTE that this information is NOT intended to be used as an authoritative public record for any geographic location, or as a legal document and shall have no legal force or effect. The City of Bradenton makes reasonable efforts to provide that data sent as an attachment is virus free, however the City of Bradenton assumes no responsibility for damages caused by the downloading or installation of this data. In addition certain individuals or entities may have proprietary interests in such data and the use of it without such parties' consent may be prohibited. Viewing or Use of the data indicates that user accepts the above conditions.

From: Donald Power
To: Volker Reiss
Subject: Fw: [EXTERNAL] Code violation complaint
Date: Tuesday, February 20, 2024 9:53:03 AM

You don't often get email from pwrfml@aol.com. Learn why this is important

[EXTERNAL EMAIL] This email originated from outside the City's email system, therefore the authenticity of the sender cannot be established. Exercise caution before clicking links, opening attachments or responding.

Donald Power Jr
1702 Manatee Avenue East
Bradenton Fl 34208

Don & Angie Power
Founders, Marriage & Family Works
(941) 920-9200

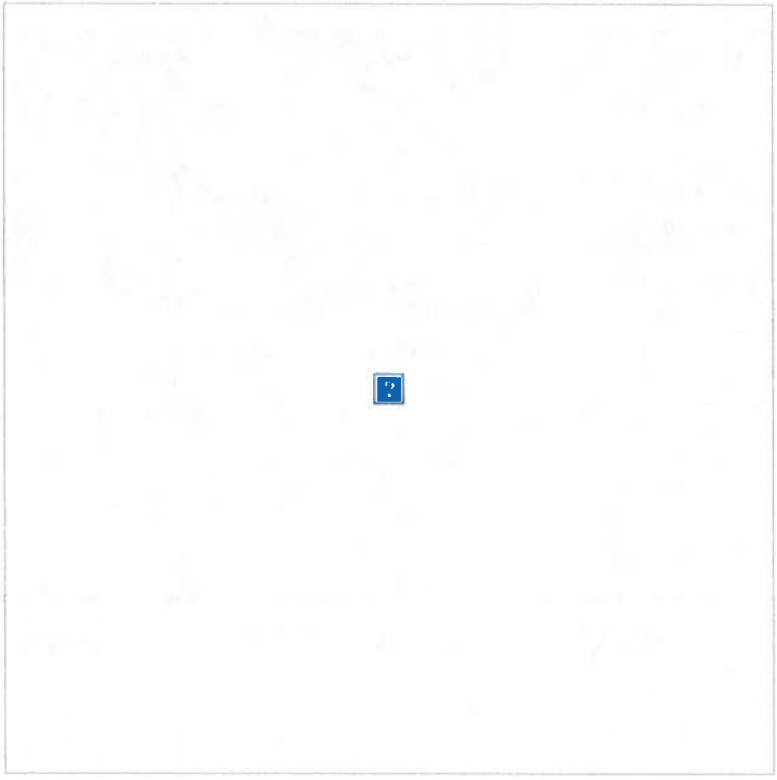

----- Forwarded Message -----
From: Volker Reiss <volker.reiss@bradentonfl.gov>
To: pwrfml@aol.com <pwrfml@aol.com>
Sent: Tuesday, February 20, 2024 at 08:19:26 AM EST
Subject: FW: [EXTERNAL] Code violation complaint

Florida Statute Section 162.06(1)(b) requires that anyone who files a code enforcement complaint has to give his or her name and address. Please provide this information otherwise state law prohibits us from investigating your complaint. Thank you.

Sincerely,
Volker Reiss
Community Services and

Code Compliance Manager
941-932-9402 (Office)

941-290-9337 (Cell)

"Keeping the Friendly City Beautiful"

From: Code Enforcement <CodeEnforcement@bradentonfl.gov>
Sent: Tuesday, February 20, 2024 8:13 AM
To: Volker Reiss <Volker.Reiss@bradentonFL.gov>
Subject: FW: [EXTERNAL] Code violation complaint

Volker,

Can you help Don Powers in the email below?

Thanks,

Kimberli

KIMBERLI JOY MURPHY | Code Compliance Coordinator | Code Enforcement

City of Bradenton, 101 Old Main Street,

Bradenton, FL 34205

941-932-9485 | kimberli.murphy@bradentonFL.gov

City Hall Hours: Monday-Thursday 7:30 am - 4:30 pm

Friday 7:30 am - 3:30 pm

think green...only print this email if necessary

From: Donald Power <pwrfml@aol.com>
Sent: Monday, February 19, 2024 9:24 AM
To: Code Enforcement <CodeEnforcement@bradentonfl.gov>
Subject: [EXTERNAL] Code violation complaint

You don't often get email from pwrfml@aol.com. Learn why this is important

[EXTERNAL EMAIL] This email originated from outside the City's email system, therefore the authenticity of the sender cannot be established. Exercise caution before clicking links, opening attachments or responding.

Good morning I have tried to be a good neighbor to this property owner but I have lost all respect and patience. He is operating an Event business out of his home having up to 100 people there at a time. I asked him to not park cars on my property and posted it with chains and signs that mysteriously are gone. The address is 1710 Manatee Avenue East.Here are his advertising sights.

https://www.kieventsmanatee.com/

https://www.bbb.org/us/fl/bradenton/profile/event-center/k-i-events-0653-90422445

Are they zoned to be able to do this?

Sent from AOL on Android

Florida has a very broad Public Records Law. This agency is a public entity and is subject to Chapter 119 of the Florida Statutes, concerning public records. E-mail communications are covered under such laws & therefore e-mail sent or received on this entity's computer system, including your e-mail address, may be disclosed to the public or media upon request.

The City of Bradenton shall not be held liable for use of ANY map or drawing attachment, which is provided as a public service for informational purposes. PLEASE NOTE that this information is NOT intended to be used as an authoritative public record for any geographic location, or as a legal document and shall have no legal force or effect. The City of Bradenton makes reasonable efforts to provide that data sent as an attachment is virus free, however the City of Bradenton assumes no responsibility for damages caused by the downloading or installation of this data. In addition certain individuals or entities may have proprietary interests in such data and the use of it without such parties' consent may be prohibited. Viewing or Use of the data indicates that user accepts the above conditions.

EXHIBIT "O"
Special Magistrate

UNITED STATES POSTAL SERVICE.

Date Produced: 01/22/2025

ConnectSuite Inc.:

The following is the delivery information for Certified Mail™/RRE item number 9214 8901 9403 8397 0864 81. Our records indicate that this item was delivered on 01/21/2025 at 06:09 p.m. in PARRISH, FL 34219. The scanned image of the recipient information is provided below.

Signature of Recipient :

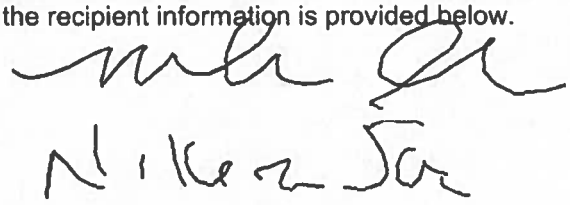

Address of Recipient : 11811 ERIE RD, PARRISH, FL 34219

Thank you for selecting the Postal Service for your mailing needs. If you require additional assistance, please contact your local post office or Postal Service representative.

Sincerely,
United States Postal Service

The customer reference number shown below is not validated or endorsed by the United States Postal Service. It is solely for customer use.

This USPS proof of delivery is linked to the customers mail piece information on file as shown below:

MRT SOLUTIONS LLC
NIKETA JACKSON
11811 ERIE RD
PARRISH FL 34219-6510

Customer Reference Number: C5592637.33953476

USPS MAIL PIECE TRACKING NUMBER: 420342196510921489019403839708648 1
MAILING DATE: 01/17/2025
DELIVERED DATE: 01/21/2025
Reference #: 32800
Property Address: 1710 Manatee Ave E
Type of Correspondence: FOF

MAIL PIECE DELIVERY INFORMATION:

MRT SOLUTIONS LLC
NIKETA JACKSON
11811 ERIE RD
PARRISH FL 34219-6510

MAIL PIECE TRACKING EVENTS:

01/17/2025 11:01	PRE-SHIPMENT INFO SENT USPS AWAITS ITEM	BRADENTON,FL 34205
01/17/2025 22:02	ORIGIN ACCEPTANCE	BRADENTON,FL 34205
01/17/2025 23:17	PROCESSED THROUGH USPS FACILITY	TAMPA,FL 33630
01/18/2025 14:36	PROCESSED THROUGH USPS FACILITY	SARASOTA FL DISTRIBUTION CENTER 34260
01/19/2025 01:41	PROCESSED THROUGH USPS FACILITY	SARASOTA FL DISTRIBUTION CENTER 34260
01/21/2025 04:49	PROCESSED THROUGH USPS FACILITY	SARASOTA FL DISTRIBUTION CENTER 34260
01/21/2025 16:09	DELIVERED LEFT WITH INDIVIDUAL	PARRISH,FL 34219

CITY OF BRADENTON
SPECIAL MAGISTRATE

City of Bradenton,

Petitioner,

vs.

MRT Solutions LLC
11811 Erie Road
Parrish, FL 34219

Respondent(s)

Case No. 25-002

FINDINGS OF FACT, CONCLUSIONS OF LAW, AND ORDER

This cause came on for public hearing before the Special Magistrate on the 7th day of January 2025 after due notice of the Respondent, and the Special Magistrate having heard testimony under oath, received evidence, and heard arguments of the Respondent and/or counsel (if any), thereupon issues its Findings of Fact, Conclusions of Law, and Order as follows:

FINDINGS OF FACT

That on and between the 21st day of February 2024 and the 7th day of January 2025, property located at 1710 Manatee Ave East, Bradenton, FL 34208/1270500000 and legally described as follows:

BEG 109.5 FT E &; 25 FT S OF THE INT LINE OF ACADEMY &; GRIFFIN STREETS; TH E 95.2 FT TO A FENCE; TH SWLY ALG SD FENCE 210 FT; TH W 167.8 FT TO THE E PROPERTY LINE OF GRIFFIN ST; TH N ALG THE PROPERTY LINE OF GRIFFIN ST 74 FT; TH E 84.5 FT; TH N 136 FT TO THE POB; LESS: W ONE-HALF (1/2)OF LOT IN THE CITY OF MANATEE FACING ON 17TH ST (FORMERLY GRIFFEN ST) HAVING A FRONTAGE OF 74 FT & RUNNING E 84.5 FT. LOCATED ON THE LOT IS A CONCRETE BLOCK HOUSE BUILT BY PROF.KENDALL AS AN INDUSTRIAL INSTITUTE, MORE PARTICULARLY DESC AS FOLLOWS: BEG 25 FT E & 161 FT S OF THE INT LINE OF ACADEMY & GRIFFEN STREETS, TH E 84.5 FT, TH S 74 FT, TH W 84.5 FT, TH N 74 FT TO POB (OR 1381 P 602)

was found to be in the following condition:

- The Property is located in a T4-R zoning district and events are being held onsite for compensation without prior City authorization provided in a special use permit.

CONCLUSIONS OF LAW

The following Sections or Articles of the Bradenton City's Code of Ordinances were found to have been violated:

Table 4.7 (building function – specific function and use) from the Bradenton Form-Based Code and references to the T4-R zoning district therein.

ORDER

It is the Order of the Special Magistrate that MRT Solutions LLC. shall comply with Table 4.7 (building function – specific function and use) from the Bradenton Form-Based Code, of the City of Bradenton's Code of Ordinances **within 180 days of rendition of this Order.**

If Respondent does not comply and remain in compliance within the time specified, Respondent shall pay a fine of $75.00 per day for each day the violation continues to exist or occurs.

If Respondent does not comply within the time specified, and an Affidavit of Non-Compliance will be issued, and the Order imposing fine, shall be recorded in the Public records of the Office of the Clerk of the Circuit Court in and for Manatee County, Florida, and once recorded shall constitute a lien against the property upon which the violation rests and the fine of $75.00 per day shall continue until compliance is achieved; in addition the lien shall attach against all real and personal property of the Respondent and foreclosed, pursuant to Florida Statutes, Chapter 162, and Ordinance No. 3050 of the City of Bradenton, unless the exemption of Article X, Section 4 of the Florida Constitution applies.

Upon complying, the Respondent shall notify the Code Enforcement Division, which will arrange for an inspection of the property.

This order pertains to the violation for holding/hosting of parties on site only. The order does not include the party planning business belonging to Mrs. Jackson which are hosted off site.

NOTICE OF RIGHT TO APPEAL

Respondent is hereby notified that they or anyone else, including the City of Bradenton, who may be aggrieved by this Order, have a right to appeal it to the Circuit Court within 30 days of the execution of this Order as set forth in Florida Statutes 162.11.

DONE AND ORDERED, this 13th day of January 2025, at Bradenton, Manatee County, Florida.

SPECIAL MAGISTRATE OF THE
CITY OF BRADENTON, FLORIDA

Maggie Mooney

STATE OF FLORIDA

COUNTY OF Sarasota

The foregoing instrument was acknowledged before me, by means of ✓ physical presence or ___ online notarization, this 13th day of January 2025 by the Special Magistrate for the City of Bradenton, Florida who is Personally Known.

AMANDA GILMORE
MY COMMISSION # HH 246410
EXPIRES: June 9, 2026

Amanda Gilmore
Notary Public

CERTIFICATE OF SERVICE

I HEREBY CERTIFY that a true and correct copy of the above and foregoing Findings of Fact, Conclusions of Law, and Order has been furnished by certified mail, posted on the property or hand delivered to Respondent and/or Respondent's authorized counsel to MRT Solutions LLC., 11811 Erie Road, Parrish, FL 34219 on this 17th day of January 2025.

Candy Hood
Code Compliance Coordinator

CANDY HOOD
MY COMMISSION # HH 619413
EXPIRES: December 8, 2028

TO:
MRT Solutions LLC
11811 Erie Road
Parrish, FL 34219

FROM:
Volker Reiss, Code Compliance Manager

THIS IS IMPORTANT INFORMATION ON YOUR PROPERTY

- Your property has been found in code violation by the Special Magistrate of the City of Bradenton.
- The Special Magistrate gave you a specific number of days to bring the property into compliance.
- Some of the necessary repairs may require building permits issued by the city's Building Division.
- After the time has expired, staff will inspect the property for compliance.
- If the property is in full compliance an **Affidavit of Compliance** will be issued and sent to you in the mail. No further action will be taken.
- If the property is **not** in full compliance an **Affidavit of Non-Compliance** will be issued. You will be notified of a hearing during which the Special Magistrate will consider imposing the fine.
- If you request an extension of time for code compliance, please contact Code Enforcement at 941-932-9402 to obtain the necessary form **before the mandated timeframe is up**. Return the completed form **at least ten days** prior to the next scheduled Special Magistrate hearing. The request will be put on the agenda for the next scheduled Special Magistrate hearing.
- If you request a penalty reduction, please contact Code Enforcement at 941-932-9402 to obtain the necessary form. Return the completed form **at least ten days** prior to the next scheduled Special Magistrate hearing. **You must have an Affidavit of Compliance to request such a reduction**. The request will be put on the agenda for the next scheduled Special Magistrate hearing.
- You have to present convincing evidence that unforeseeable or exceptional factors outside your control prevented code compliance during the mandated timeframe.
- Special Magistrate hearings are on the first Tuesday of each month.
- If you have any questions call Code Enforcement at 941-932-9485.

UNITED STATES POSTAL SERVICE

Date Produced: 12/02/2024

ConnectSuite Inc.:

The following is the delivery information for Certified Mail™/RRE item number 9214 8901 9403 8389 0840 51. Our records indicate that this item was delivered on 11/29/2024 at 06:11 p.m. in PARRISH, FL 34219. The scanned image of the recipient information is provided below.

Signature of Recipient :

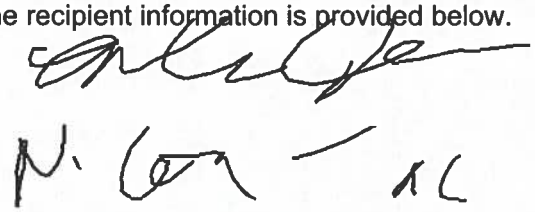

Address of Recipient : 11811 ERIE RD, PARRISH, FL 34219

Thank you for selecting the Postal Service for your mailing needs. If you require additional assistance, please contact your local post office or Postal Service representative.

Sincerely,
United States Postal Service

The customer reference number shown below is not validated or endorsed by the United States Postal Service. It is solely for customer use.

This USPS proof of delivery is linked to the customers mail piece information on file as shown below:

MRT SOLUTIONS LLC
NIKETA JACKSON R A
11811 ERIE RD
PARRISH FL 34219-6510

Customer Reference Number: C5483017.33227909

USPS MAIL PIECE TRACKING NUMBER: 420342196510921489019403838908405 1
MAILING DATE: 11/26/2024
DELIVERED DATE: 11/29/2024
Reference #: 32800
Property Address: 1710 Manatee Ave. E.
Type of Correspondence: Notice of Hearing

MAIL PIECE DELIVERY INFORMATION:

MRT SOLUTIONS LLC
NIKETA JACKSON R A
11811 ERIE RD
PARRISH FL 34219-6510

MAIL PIECE TRACKING EVENTS:

11/26/2024 11:32	PRE-SHIPMENT INFO SENT USPS AWAITS ITEM	BRADENTON,FL 34205
11/27/2024 13:20	ORIGIN ACCEPTANCE	BRADENTON,FL 34205
11/27/2024 14:35	PROCESSED THROUGH USPS FACILITY	SARASOTA FL DISTRIBUTION CENTER 34260
11/29/2024 04:17	PROCESSED THROUGH USPS FACILITY	SARASOTA FL DISTRIBUTION CENTER 34260
11/29/2024 18:11	DELIVERED LEFT WITH INDIVIDUAL	PARRISH,FL 34219

SPECIAL MAGISTRATE

CITY OF BRADENTON, FLORIDA

NOTICE OF HEARING

RE: Case Number: 25-002
Owner Address: MRT Solutions LLC
11811 Erie Road
Parrish, FL 34219

You are hereby formally notified that on Tuesday the, 7th day of January, 2025, at 9:00 AM there will be a Public Hearing at Bradenton City Council Chambers, 101 Old Main Street, Bradenton, Florida, concerning violation(s) of Section(s)

Table 4.7 (building function - specific function and use) from the Bradenton Form-Based Code of the City Codes. (See attached Notice of Violation).

Should you be found in violation of the City Codes, the Special Magistrate has the power by law to levy fines of up to $250.00 a day against you and your property for every day that any violation(s) continues beyond the date set in an Order of the Magistrate for compliance.

Please be prepared to present evidence at this hearing concerning the amount of time necessary to correct the alleged violation(s), should you be found in violation of the City Codes. All pictures or emails need to be in physical form for the file.

The city will furnish you forms should you wish to subpoena any witnesses, please contact the Code Enforcement Coordinator at (941) 932-9485.

Sincerely,

Maggie Mooney, Esq.
Special Magistrate

AFFIDAVIT OF VIOLATION - NOTIFICATION OF VIOLATION

NAME OF VIOLATOR: MRT Solutions LLC

ADDRESS: 11811 Erie Road
Parrish, FL 34219

SECTION OF CITY CODE which has been violated: Table 4.7 (building function - specific function and use) from the Bradenton Form-Based Code.

DATE OF VIOLATION: February 21, 2024

ADDRESS OF VIOLATION: 1710 Manatee Avenue East, Bradenton, FL 34208

LEGAL DESCRIPTION of property where violation(s) occurred: See attached sheet.

FACTS behind violation: See attached sheet.

DATE Violator previously notified of violation(s): March 22, 2024

WITNESS to violation: NAME	Names and Addresses ADDRESS
Michael Maginness	City of Bradenton

I hereby affirm that the above facts are true to the best of my knowledge.

Affiant

STATE OF FLORIDA
COUNTY OF MANATEE

PERSONALLY APPEARED before me, by means of ✓ physical presence or ___ online notarization, the undersigned authority, Michael Maginness acknowledges that he did execute the foregoing Affidavit.

SWORN TO AND SUBSCRIBED before me this 26th day of November, 2024.

Notary Public, State of Florida

KIMBERLI JOY MURPHY
MY COMMISSION # HH 407226
EXPIRES: August 7, 2027

Dated this 26th day of November, 2024 CASE NUMBER: 25-002

SPECIAL MAGISTRATE **CITY OF BRADENTON, FLORIDA**

EXHIBIT "P"
Pre-Application Meeting for Club/Event Center

PLN-PRE-25-0002

Menu Reports Help

File Date: 01/20/2025

Application Status: New

Assigned To:

Application Name:

Application Detail: Detail

Scope of Work: Pre application meeting

Application Type: Pre-Application Meeting

Documents:

File Name	Document Group	Category	Description	Type	Document Status	Document Status Date
1710 site plan with el...			Site plan with elev...	application/pdf	Uploaded	01/20/2025
LAYOUT#3.pdf			Floor plan	application/pdf	Uploaded	01/20/2025

Show all

Address: 1710 MANATEE Ave E, BRADENTON, FL 34208

Owner Name: MRT SOLUTIONS LLC

Owner Address: 11811 ERIE RD, PARRISH, FL 34219

Parcel No: 1270500000

Licensed Professionals Info:

Primary	License Number	License Type	Name	Business Name	Business License #

Application Comments:

View ID	Comment	Date

Initiated by Product: ACA

Contact Info:

Name	Organization Name	Contact Type	Status
Niketa Jackson		Applicant	Active

Job Value: $0.00

Total Fee Assessed: $0.00

Total Fee Invoiced: $0.00

Balance: $0.00

Custom Fields:

Workflow Status:

Task	Assigned To	Status	Status Date	Action By
Intake	Jamie Schindewolf			
Case Manager				
Building Review				
Public Works Review				
Planning Review				
Fire Review				
Other Reviews				
Review Consolidation				
DRC				
Planning Commission				
City Council #1				
City Council #2				

Condition Status:

Name	Short Comments	Status	Apply Date	Severity	Action By

Scheduled/Pending Inspections:

Inspection Type	Scheduled Date	Inspector	Status	Comments

Resulted Inspections:	Inspection Type	Inspection Date	Inspector	Status	Comments

F. C. SURVEYING, PLLC d/b/a
Florida Coast Surveying
PROFESSIONAL SURVEYOR'S, & MAPPER'S
CERTIFICATE NO. LB-0006938
P.O. BOX 20365
BRADENTON, FLORIDA 34204
941-744-9295 FAX 941-748-6751
CINDYCRIDER@FLORIDACOASTSURVEYING.COM

SCALE 1" = 30'
NOTE: SUBJECT PROPERTY IS ON CENTRAL WATER

FLOOD ZONE : X
COMMUNITY PANEL 12081C 0308E
DATED : 9-17-14
(FLOOD ZONE : "B","C","D", & "X" ARE NOT IN DESIGNATED FLOOD HAZARD ZONE AREA.)
SUBJECT TO VERIFICATION

STREET ADDRESS
1710 MANATEE AVENUE EAST
BRADENTON, FLORIDA 34208

BOUNDARY SURVEY
OF
THAT CERTAIN PARCEL OF LAND SHOWN HEREON
LYING AND BEING IN
SECTION 30, TOWNSHIP 34 SOUTH, RANGE 18 EAST
MANATEE COUNTY, FLORIDA

NOTE:
IN COMPLIANCE WITH FLORIDA STATUTES 5J-17.052.2 (D) (4) (IF LOCATION OF EASEMENTS OR RIGHT-OF-WAY OF RECORD, OTHER THAN THOSE ON RECORD PLAT, IS REQUIRED, THIS INFORMATION MUST BE FURNISHED TO THE SURVEYOR AND MAPPER.

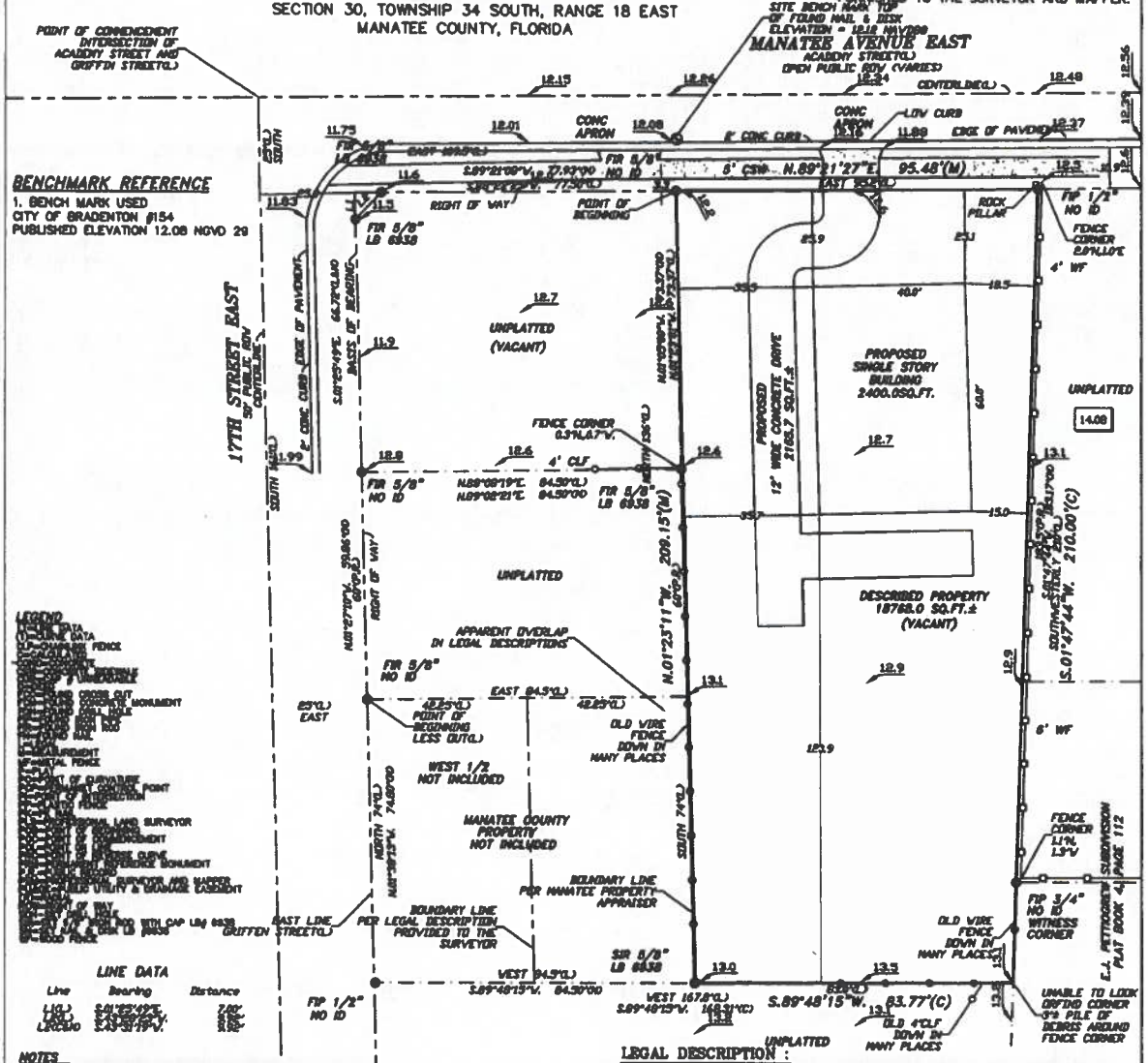

BENCHMARK REFERENCE
1. BENCH MARK USED
CITY OF BRADENTON #154
PUBLISHED ELEVATION 12.08 NGVD 29

LEGEND
LINE DATA

Line	Bearing	Distance
L1(L)	S.41°22'49"E.	7.85'
L2(L)	S.13°09'19"W.	10.00'
L3(C&M)	S.13°09'19"W.	9.98'

NOTES
1. THE ACCURACY OF THIS SURVEY MEETS REQUIREMENTS AS SET FORTH IN 5J-17.051(3)(b)1 SUBURBAN (LINEAR: 1 FOOT IN 7,500 FEET
2. BEARINGS ARE BASED ON PLAT OR OTHERWISE SHOWN
3. THE LEGAL DESCRIPTION SHOWN HEREON IS PROVIDED BY CLIENT UNLESS NOTED OTHERWISE.
4. THERE MAY BE ADDITIONAL RESTRICTIONS AND/OR EASEMENTS THAT ARE NOT RECORDED ON SAID PLAT THAT MAY BE FOUND IN THE PUBLIC RECORDS OF THIS COUNTY.
5. ALL BUILDING DIMENSIONS SHOWN HEREON ARE TO THE NEAREST TENTH OF A FOOT UNLESS NOTED OTHERWISE.
6. THIS SURVEY DOES NOT DETERMINE OWNERSHIP.
7. ONLY VISIBLE ENCROACHMENTS ON OR ACROSS THE PROPERTY LINES SHOWN HEREON WERE LOCATED. THERE MAY BE OTHER ENCROACHMENTS NOT SHOWN ON THIS SURVEY.
8. THIS SURVEY MEETS THE MINIMUM TECHNICAL STANDARDS FOR SURVEYS RECORDED.
9. OWNERSHIP OF FENCES, IF ANY, WERE NOT DETERMINED AS PART OF THIS SURVEY.
10. NO TITLE OPINION OR ABSTRACT OF TITLE HAS BEEN PROVIDED. THERE MAY BE DEEDS OF RECORD, OTHER THAN THOSE SHOWN, WHICH IT WAS NOTICED. THIS SURVEY IS SUBJECT TO ANY FACTS THAT AN ACCURATE TITLE SEARCH MAY DISCLOSE.
11. THIS SURVEY DOES NOT PURPORT TO GIVE ANY RIGHTS OR OPINIONS REGARDING ZONING OR LAND USE.
12. ELEVATIONS SHOWN HEREON ARE BASED ON NORTH AMERICAN VERTICAL DATUM OF 1988, UNLESS OTHERWISE NOTED.
13. UNDISCLOSED ENCUMBRANCES IF ANY NOT LOCATED.

LEGAL DESCRIPTION :
BEGIN 109.5 FEET EAST AND 25 FEET SOUTH OF THE INTERSECTION LINE OF ACADEMY AND GRIFFIN STREETS, THENCE EAST 95.2 FEET TO A FENCE; THENCE SOUTHWESTERLY ALONG SAID FENCE 210 FEET; THENCE WEST 167.8 FEET TO THE EAST PROPERTY LINE OF GRIFFIN STREET, THENCE NORTH 74 FEET; THENCE EAST 84.5 FEET; THENCE NORTH 136 FEET TO THE POINT OF BEGINNING, ALL LYING AND BEING SITUATED IN MANATEE COUNTY, FLORIDA, FLORIDA.
LESS: WEST ONE-HALF 1/2 OF LOT IN THE CITY OF MANATEE, FLORIDA, FACING 17TH STREET (FORMERLY GRIFFEN STREET) HAVING A FRONTAGE OF 74 FEET AND RUNNING EAST 84.5 FEET. LOCATED ON THIS LOT IS A CONCRETE BLOCK HOUSE BUILT BY PROF. KENDALL AS AN INDUSTRIAL INSTITUTE, MORE PARTICULARLY DESCRIBED AS FOLLOWS; BEGIN 25 FEET EAST AND 161 FEET SOUTH OF THE INTERSECTION LINE OF ACADEMY AND GRIFFEN STREETS; THENCE EAST 84.5 FEET; THENCE SOUTH 74 FEET; THENCE WEST 84.5 FEET; THENCE NORTH 74 FEET TO THE POINT OF BEGINNING.

CERTIFICATION :
I CERTIFY THAT THIS SURVEY WAS MADE UNDER MY DIRECTION AND THAT IT MEETS THE STANDARDS OF PRACTICE SET FORTH BY THE BOARD OF PROFESSIONAL LAND SURVEYORS AND MAPPERS IN CHAPTER 5J-17.051- 5J-17.052, FLORIDA ADMINISTRATIVE CODE, PURSUANT TO SECTION 472.027, FLORIDA STATUTES.

BY: _____ SURVEY DATE : 08/27/2019
M. SCOTT CRIDER, PSM #6871

NOT A CERTIFICATION OF TITLE, ZONING, EASEMENTS OR FREEDOM OF ENCUMBRANCES.
"UNLESS IT BEARS THE SIGNATURE AND THE ORIGINAL RAISED SEAL OF A FLORIDA LICENSED SURVEYOR AND MAPPER THIS DRAWING, SKETCH, PLAT OR MAP IS FOR INFORMATIONAL PURPOSES ONLY AND IS NOT VALID"
THIS SURVEY/REPORT IS PROVIDED IN HARD COPY FORMAT ONLY, ALL GRAPHIC AND TEXT DATA IS COPYRIGHTED.

LEGEND
6.51 =GARAGE FLOOR ELEVATION
6.50 =RESIDENCE FLOOR ELEVATION
6.0 =EXISTING ELEVATIONS

CERTIFIED TO :
MEDI - REDI MEDICAL TRANSPORT

NOTE:
THIS IS A LIMITED TOPOGRAPHIC SURVEY AND MAY NOT MEET ALL REQUIREMENTS SET FORTH IN 5J-17.053(2) THE PURPOSE IS TO SHOW EXISTING SITE ELEVATIONS ONLY.

DRAWN BY:	REVISIONS
S.C.	9-18-19 ADDED LENDER 4-08-20 ADDED ELEVATIONS 5-05-20 ADDED PROPOSED IMPROVEMENTS
FIELD BOOK	PROJECT NO:
396-70	20_M39509A

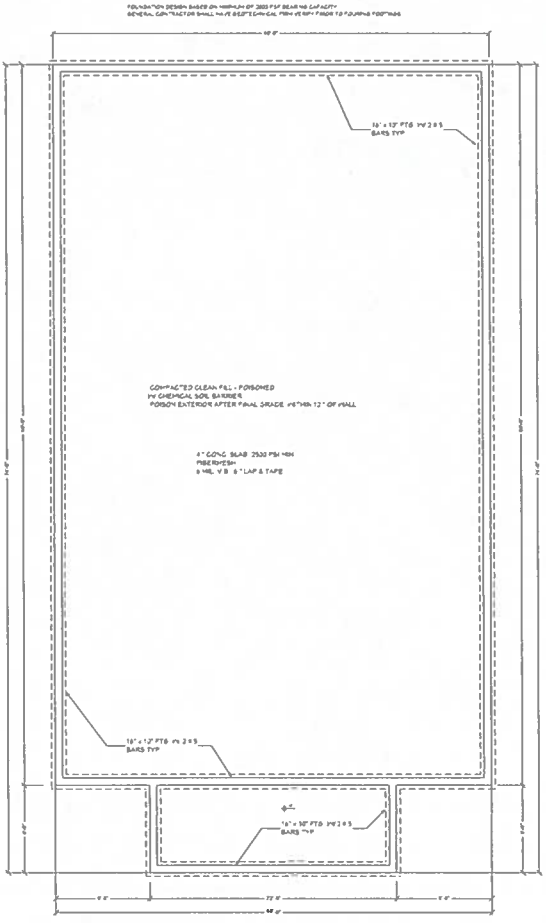

FOUNDATION PLAN SCALE 1/4" = 1'-0"

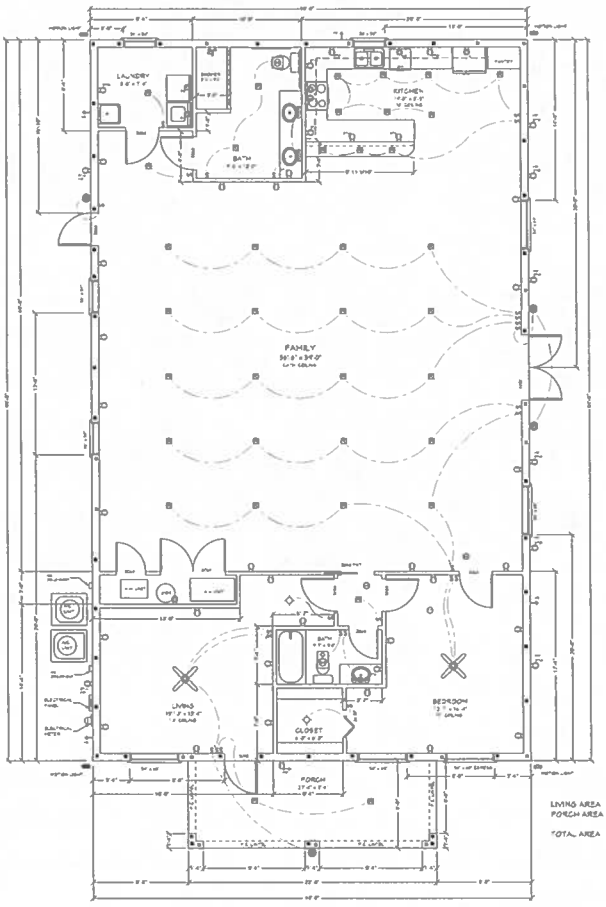

LIVING AREA 2560 SQ FT
PORCH AREA 132 SQ FT
TOTAL AREA 2932 SQ FT

FLOOR PLAN SCALE 1/4" = 1'-0"

COKER ZIMMERMANN
DRAFTING & DESIGN SERVICE
2502 4th ST W BRADENTON, FLA
PH 941.746-5221

SEAL

BUILDING PLANS FOR:
1710 MANATEE AVENUE EAST
BRADENTON, FL

SEPT. 2019

1
3

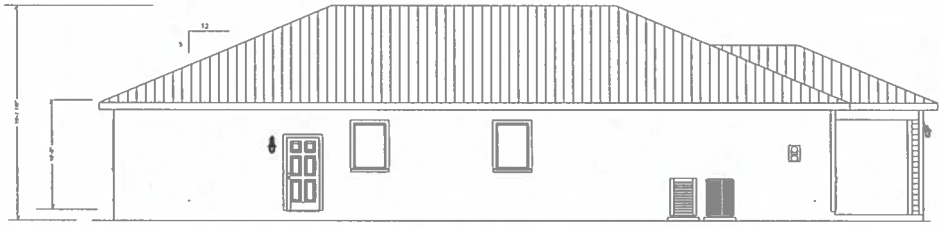

WEST ELEVATION SCALE 1/4" = 1'-0"

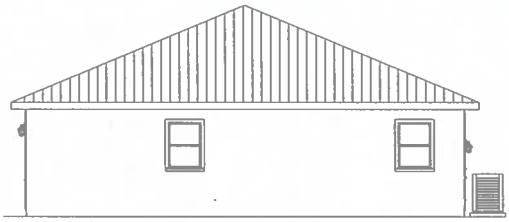

SOUTH ELEVATION SCALE 1/4" = 1'-0"

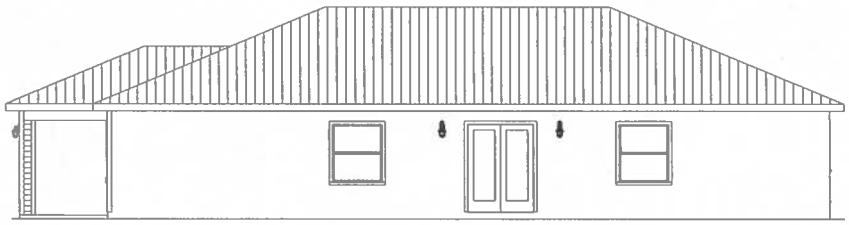

EAST ELEVATION SCALE 1/4" = 1'-0"

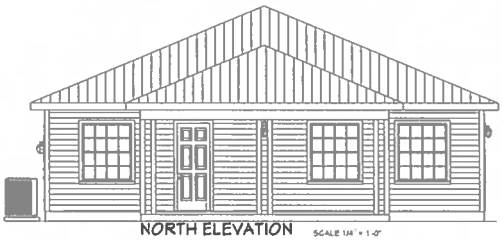

NORTH ELEVATION SCALE 1/4" = 1'-0"

THE ARCHITECT OF RECORD DELEGATES THE DESIGN OF THE PRE ENGINEERED TRUSSES TO A TRUSS DESIGN ENGINEER AND A TRUSS SYSTEM DESIGN ENGINEER. BOTH ENGINEERS MUST HAVE CURRENT FLORIDA PROFESSIONAL ENGINEERING LICENSES AND BE QUALIFIED TO PERFORM THE DELEGATED DESIGN WORK.

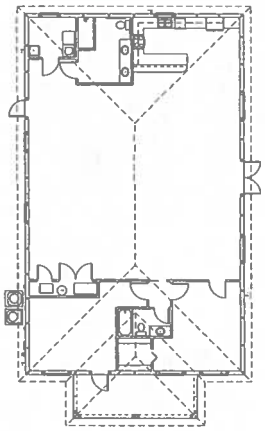

ROOF PLAN

SCALE 1/8" = 1'-0"

COKER ZIMMERMANN DRAFTING & DESIGN SERVICE
3102 w 9th st BRADENTON, FLA.
PH: 941-746-5221

BUILDING PLANS FOR:
1710 MANATEE AVENUE EAST
BRADENTON, FL

SEAL

SEPT. 2019

2
3

WOOD FRAMING NOTES:

1 WOOD CONSTRUCTION CONNECTIONS AND NAILING REQUIREMENTS SHALL CONFORM TO THE "FLORIDA BUILDING CODE"
2 ALL WOOD FRAMING MATERIAL SHALL BE SURFACED DRY AND USED AT 19% MAXIMUM MOISTURE CONTENT
3 ALL LOAD BEARING WALL FRAMING SHALL BE NO 2 GRADE SPF OR HEM-FIR
4 ALL JOIST AND RAFTER FRAMING SHALL BE NO 2 GRADE SOUTHERN PINE OR HEM FIR
5 ALL FRAMING EXPOSED TO THE WEATHER OR IN CONTACT WITH MASONRY OR CONCRETE SHALL BE PRESSURE TREATED IN ACCORDANCE WITH THE AMERICAN WOOD PRESERVERS ASSOCIATION SPECIFICATIONS
6 BOLT HEADS SHALL BE CAREFULLY CENTERED AND DRILLED NOT MORE THAN 1/16" LARGER THAN THE BOLT DIAMETER. BOLTED CONNECTIONS SHALL BE SNUGGED TIGHT BUT NOT TO THE EXTENT OF CRUSHING WOOD UNDER WASHERS
7 PREFABRICATED WOOD I-JOIST LUMBER HEADERS AND BEAMS SHALL BE MANUFACTURED BY "TRUS-JOIST MACMILLAN CORP." BOISE CASCO OR APPROVED EQUAL. DO NOT CUT OR NOTCH MICRO-LAM MATERIAL WITHOUT THE MANUFACTURER'S APPROVAL.
8 PREFABRICATED METAL JOIST HANGERS, HURRICANE CLIPS, HOLD DOWN ANCHORS AND OTHER ACCESSORIES SHALL BE AS MANUFACTURED BY "SIMPSON STRONG TIE COMPANY" OR EQUAL. INSTALL ALL ACCESSORIES AS PER THE MANUFACTURERS REQUIREMENTS. ALL STEEL SHALL HAVE A MINIMUM THICKNESS OF 20 GAUGES PER ASTM A446 GRADE A1 AND BE GALVANIZED HOT DIPPED

ATTENTION ALL SIMPSON CONNECTORS IN CONTACT WITH ACQ CAN LAG AND ACQ TREATED LUMBER MUST BE OF THE FOLLOWING

SIMPSON STRONG TIE PRODUCT CODE	MATERIAL
ZMAX GRADE	HOT DIPPED GALVANIZED
"A" OR BETTER SHEET METAL	HOT DIPPED GALVANIZED
METAL STRAPPING	STAINLESS STEEL

NOTE: HEX HEAD BOLTS AND LAG SCREWS MUST BE STAINLESS STEEL WHEN IN CONTACT WITH ACQ TREATED LUMBER. ALL CUTS, NOTCHES AND HOLES BORED IN ACQ TREATED LUMBER MUST BE FIELD TREATED IN ACCORDANCE WITH AWPA STANDARD M4

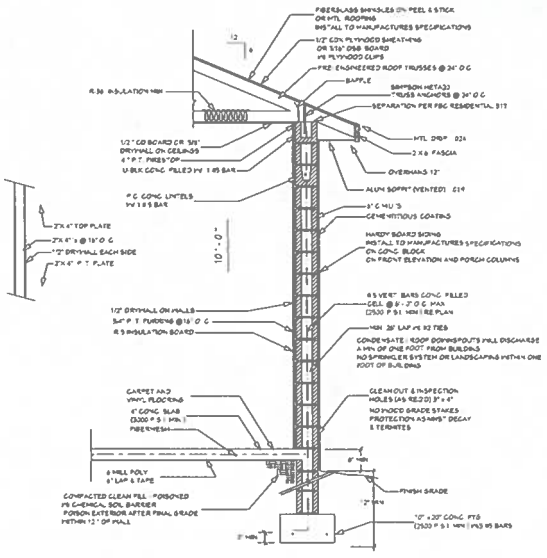

TYPICAL WALL SECTION
3/4" = 1'-0"

SAFE LOAD TABLE FOR CAST CONCRETE HOLLOW STRAND OR PRECAST & PRESTRESSED LINTELS

LENGTH	SAFE LOAD - POUNDS PER LINEAR FOOT	
	UNIFORM	CONCENTRATED *
1'-0"	1,410 lbs	1,410 lbs
2'-0"	1,180 lbs	1,180 lbs
3'-0"	1,010 lbs	1,010 lbs
4'-0"	880 lbs	880 lbs
5'-0"	780 lbs	780 lbs
6'-0"	700 lbs	700 lbs
7'-0"	630 lbs	630 lbs
8'-0"	570 lbs	570 lbs
9'-0"	520 lbs	520 lbs
10'-0"	480 lbs	480 lbs
11'-0"	440 lbs	440 lbs
12'-0"	410 lbs	410 lbs
13'-0"	380 lbs	380 lbs
14'-0"	350 lbs	350 lbs
15'-0"	330 lbs	330 lbs
16'-0"	310 lbs	310 lbs
17'-0"	290 lbs	290 lbs
18'-0"	270 lbs	270 lbs
19'-0"	260 lbs	260 lbs
20'-0"	240 lbs	240 lbs

NOTES:
1. SAFE LOADING IS BASED ON LINTELS BEING SUPPORTED AT EACH END BY NOT LESS THAN 8" OF BEARING ON MASONRY OR CONCRETE.
2. SAFE LOADING VALUES ARE BASED ON THE USE OF 2,500 PSI CONCRETE AND GRADE 60 REINFORCING STEEL.
3. SAFE LOADING VALUES ARE BASED ON THE USE OF 2,500 PSI CONCRETE AND GRADE 60 REINFORCING STEEL.

BE AWARE OF OVER CONSTRUCTION TO COMPLY WITH THE 2017 FLORIDA BUILDING CODE 6TH EDITION

COKER ZIMMERMANN DRAFTING & DESIGN SERVICE
2502 e 9th st bradenton, fla
PH. 941-746-5221

SEAL

BUILDING PLANS FOR:
1110 MANATEE AVENUE EAST
BRADENTON, FL.

REVISIONS

SEPT. 2019

3
3

CITY OF BRADENTON

DEVELOPMENT REVIEW COMMITTEE

COMMENT SHEET

1:30 PM: PLN-PRE-25-0002 **WARD 5** **CENTRAL CRA**
Request: Event Space
Applicant: Niketa Jackson, MRT SOLUTIONS LLC
Address: 1710 MANATEE Ave E, BRADENTON, FL 34208

This is only a preliminary review that is meant to provide guidance prior to the formal application review process for applicable permits.

PLANNING DEPARTMENT

CODES:

1. FBC – Means Form Based Code
2. LUR – Means Land Use Regulations

GENERAL ZONING REGULATIONS:

1. Proposed Project: Club (Event Space)
2. Project located in the T4-O zoning district. Use listed as a Special Use.
3. Future Land Use Classification: UCC (Urban Commercial Corridor)
4. Flood Zone: X
5. Project size is .2617 acres.

FBC ARTICLE 12 – DEFINITIONS:

Club: a facility used by a group of people organized for a common purpose to pursue common goals, interests or activities and usually characterized by certain membership qualifications, payment of fees and dues, regular meetings, and a constitution and bylaws.

FBC TABLE 4.7 – PERMITTED AND SPECIAL USES:

e. CIVIC	T3 T4-S	T4-R	T4-O	T5	T6	SD
Club		SU	SU			SU

LUR SCHEDULE 4.1.4.1 – AUTOMOBILE ON-SITE PARKING REQUIREMENTS:

AMUSEMENT ESTABLISHMENTS	
Indoor or non-spectator	1 per 3 visitors based on maximum capacity of assembly

Will need to know maximum capacity to determine the required number of off-street parking spaces. Design professional needs to determine.

FBC Section 4.9.1.b

Open parking areas shall be masked from the frontage by a building or streetscreen. ***Unknown where parking will be located but need to keep this in consideration when laying out parking areas.***

FBC Section 4.9.5.a
On a primary grid (A-Grid) all parking lots shall be located in the second or third layer. ***Unknown where parking will be located but need to keep this in consideration when laying out parking areas.***

FBC Section 4.10 Transect Parking Standards
If the applicant feels the required parking ratios are too high, the applicant can request relief to the parking ratios by submitting data to the Planning and Public Works Directors to consider for a waiver. Please review Section 4.10 for more information.

FBC Section 4.10.7
All off-street parking shall comply with the minimum provisions noted in LUR Section 4.1.4.1. However, the front of a vehicle may encroach up to two feet upon any landscaped area or walkway. Two feet of such landscaped area or walkway may be part of the required depth of each abutting parking space in such instance; however, in such instances the width of the sidewalk shall be increased to at least six feet.

LUR 4.1.4.1 Design

a. The parking and vehicular use areas shall be improved subject to the approval of the director of public works. Asphalt and concrete are permitted, paver block, porous concrete or other pervious material (with the exception of shell) are encouraged. The paving requirement may be waived by the PCD director for a specific period of time or on a permanent basis for infrequently used parking areas such as those for recreational facilities or overflow parking areas. Within the Village of the Arts Overlay district, the PCD director may waive the paving requirements for up to five years.
b. Paved lots shall be striped or otherwise marked to designate individual spaces with the exception of driveways for one- and two-family dwellings.
c. Angle parking spaces shall measure a minimum of nine feet in width and 20 feet in length. Parallel parking spaces shall measure ten feet by 24 feet. Handicapped parking spaces shall measure 12 feet by 20 feet. The required width of the aisle between rows of parking spaces shall be dependent upon the angle of the parking spaces as follows:

Angle of Parking Spaces	Required Aisle Width
90 degrees	24 feet, two-way traffic flow
60 degrees	18 feet, one-way traffic flow
45 degrees	13 feet, one-way traffic flow
30 degrees	11 feet, one-way traffic flow
Parallel	12 feet, one-way traffic flow

Alternative parking lot layouts may be approved by the PCD director for special purpose parking lots, such as valet attended lots, storage lots for tractor trailers or lots for the storage of towed vehicles. This will allow administrative approval of specialty parking lots in cases where the standard layout is not appropriate.
d. Parking spaces shall have curbing, wheel stops or other effective means to prevent vehicles from encroaching into required landscaped areas.
e. Paved areas greater than 1,500 square feet in size shall comply with the drainage requirements of subsection 4.1. 5 and shall require approval by the director of public works. Paved areas greater than 4,000 square feet shall require a drainage plan review and approval by the director of public works. And the Southwest Florida Water Management District approval or exemption.
f. Within large parking lots, the PCD director may require sidewalks and stop

signs for the safety of pedestrians circulating in the lot.

g. Speed bumps are prohibited unless otherwise approved by the fire department and department of public works.

FBC Section 4.12

If any signage is proposed for the use, it shall comply with Section 4.12 of the Form Based Code.

QUESTIONS AND COMMENTS:

1. ***What are the hours of operation for the proposed use?***
2. ***Business needs to ensure that they have filed for its Business Tax Receipt with the city.***
3. ***Special Use hearing scheduled for Planning Commission on 03/19/2025.***

PUBLIC WORKS DEPARTMENT

1. The information below shall be used for guidance only and is the best available data at the time of this request. Due diligence is the responsibility of the owner, applicant, EOR. The information provided is intended as guidance and is subject to modification based upon the actual design of the project. The comments below should not be construed as all-inclusive with respect to compliance of the Land Development Code, Utility Standards Manual, Public Works specifications, or any other codes/manuals utilized by City of Bradenton.
2. Should any existing water services be insufficient, and a larger service installed, the existing service will need to be removed at the main and plugged.
3. Obtain Site Improvement Permit prior to obtaining any Building permits. Include any SWFWMD,FDOT documentation as part of your submittal paperwork.
4. Use City standards (Public Works and Utilities Infrastructure Specifications) for Site Plan details, i.e., curbs, sidewalks, dumpsters, parking, ADA parking, etc. Make sure that all plan details are consistent and are the same on all plans.
5. Submit with the Site Improvement Plan:
    a. Landscape Plan
    b. Lighting Plan
    c. Irrigation Plan
    d. Boundary Survey
    e. Topographical & Boundary Survey (recent)
6. Provide a tree survey with existing tree count, including type and condition. Also provide a tree plan that shows preserved existing trees as well as proposed plantings. Tree replacement or payment into tree fund will be required at time of groundbreaking, according to LUR's Section 2.2.3.2.f. and Schedule 2.2.3.2 TREE REPLACEMENT REQUIREMENTS.
7. A Pre-construction meeting is required prior to the commencement of any site construction. The owner, engineer and contractor must all be present.
8. Four (4) sets of plans are required to be submitted (two for the original submittal), including pdf's of the plans on a CD.
9. Allow time at the end of the project for the full inspection process, to include Building, Electrical, Engineering/Public Works and finally Zoning. Zoning will require all Landscaping to be complete and according to approved plans prior to issuance of CO.
10. Construction schedules are per Code, and dictated by the City's noise ordinance, as follows:
    a. Monday – Friday 7AM to 6PM
    b. Saturday - 9AM to 6 PM
    c. No work on Sundays or Federal Holidays.
11. Peak stormwater discharge must not go to street. Discharge must flow directly into storm water pipes. There is to be no overland flow to roads.

BUILDING DEPARTMENT

1. Currently a single-family dwelling. If used for anything other than a dwelling unit a change of occupancy permit will be required. A change of occupancy permit must include intended use, occupancy, life safety plan, and required documents as listed in Florida Building Code chapter 10, sections 1001 – 1012

Update for Live Work requirement:

- **2023 FBC - Building, 8th edition 508.5 Live/Work Units**
- A *live/work unit* shall comply with Sections 508.5 through 508.5.11.

Exception: Dwelling or sleeping units that include an office that is less than 10 percent

of the area of the *dwelling unit* are permitted to be classified as *dwelling units* with accessory occupancies in accordance with Section 508.2. 508.5.1 Limitations
The following shall apply to all live/work areas:

- The *live/work unit* is permitted to be not greater than 3,000 square feet (279 m) in area.
- The nonresidential area is permitted to be not more than 50 percent of the area of each *live/work unit*.
- The nonresidential area function shall be limited to the first or main floor only of the *live/work unit*.
- Not more than five nonresidential workers or employees are allowed to occupy the nonresidential area at any one time. 2. 3. 4. 1.

FIRE DEPARTMENT

1. If this structure is going to be used as an assembly structure it will need to meet the code for an assembly use.
2. Cooking in an assembly use needs to be treated as commercial cooking.
3. What is the occupant load/seating arrangements?
4. Exit capacities will need to be evaluated.

CITY SURVEYOR:

1. A boundary survey, tree survey and topographic survey with a survey date as defined in Chapter 5J-17.051(3)(d), F.A.C. within the last year are required. The topographic survey will need to be referenced to the North American Vertical Datum of 1988 (NAVD88) and based on the City of Bradenton's NAVD88 vertical control system or the National Spatial Reference System (NSRS) as published by the National Geodetic Survey (NGS). The use of a benchmark converted from NGVD29 to NAVD88 is not acceptable. Additionally, a benchmark established by GPS is not acceptable.
2. The benchmark referenced is an old City of Bradenton NGVD1929 benchmark that is not part of the National Spatial Reference System (NSRS). As a result, it is not an acceptable benchmark. There are three acceptable benchmarks between 900 feet to 2000 feet from the site.
3. The boundary/topographic survey submitted references a version of Chapter 5J-17, F.A.C. that was outdated at the time the survey was produced.

POLICE

1. It is recommended that tree canopies be pruned above 6' or above to maintain natural surveillance.
2. It is recommended that any ground landscape be maintained at 2' or lower to maintain natural surveillance.
3. It is recommended that the parking lot, driveways, and sidewalks be lighted with a white light source (no greater than 4000K) maintaining 3-foot candles throughout to enhance natural surveillance throughout those areas.
4. It is recommended that access controls be utilized for entry and exit.
5. There are concerns for parking plan. Unable to see site plan due to font issues.
6. There are concerns for ingress and egress of vehicle traffic on the site.
7. BCO 38-155

OTHER COMMENTS

1. **Code Enforcement:** The special magistrate found this property in violation for not having a special use permit.
2. **CRA:** Grant opportunities possibly available. List of grants on CRA website. Grants are 50/50 match.

NEXT STEPS

1. Need to determine capacity of the building, which will determine required parking. Coker/Zimmerman can assist with this (Needed prior to start of Special Use hearing).
2. Need an updated site plan showing off-street parking layout. Plan shall be dimensioned showing space sizes, drive aisle widths and ADA space location (Needed prior to Special Use hearing).
3. Special Use hearing before Planning Commission and City Council. Anticipated schedule is to start hearing process on 03/19/2025.
4. If approved, begin SIP process along with Building permit process for change of use.

Attachments:

- Contact List
- PW Documents

EXHIBIT "Q"
City Code Enforcement Complaint (Parking Lot & Property Use)

CE-25-02-COM-0123

Menu Reports Help

File Date: 02/24/2025

Application Status: Closed-Not In Violation

Assigned To:

Scope of Work: Parking lot without permit.

Case Type: Complaint

Documents:

File Name	Document Group	Category	Description	Type	Document Status	Document Status Date
complaint.email.pdf	ENF_GENERAL			application/pdf	Uploaded	02/24/2025

Show all

Address: 1710 MANATEE Ave E, BRADENTON, FL 34208

Owner Name: MRT SOLUTIONS LLC

Owner Address: 11811 ERIE RD, PARRISH, FL 34219

Parcel No: 1270500000

Case Comments:

View ID	Comment	Date

Initiated by Product: AV360

Contact Info:

Name	Organization Name	Contact Type	Status
Don Power		Complainant	Active

Job Value: $0.00

Total Fee Assessed: $0.00

Total Fee Invoiced: $0.00

Balance: $0.00

Custom Fields:

GENERAL INFORMATION
Complaint Source
Email

Workflow Status:

Task	Assigned To	Status	Status Date	Action By
Intake		Investigator...	02/24/2025	Volker Reiss
Investigation	Michael Maginness	Not in Viola...	02/24/2025	Michael Maginness

Condition Status:

Name	Short Comments	Status	Apply Date	Severity	Action By

Scheduled/Pending Inspections:

Inspection Type	Scheduled Date	Inspector	Status	Comments

Resulted Inspections:

Inspection Type	Inspection Date	Inspector	Status	Comments
Initial Inspection	02/24/2025	Michael Maginness	In Compliance	The parking lot is made of crushed...

From: Donald Power
To: Volker Reiss
Subject: RE: [EXTERNAL] Code violation complaint
Date: Monday, February 24, 2025 9:55:29 AM
Attachments: image001.png

You don't often get email from pwrfml@aol.com. Learn why this is important

[EXTERNAL EMAIL] This email originated from outside the City's email system, therefore the authenticity of the sender cannot be established. Exercise caution before clicking links, opening attachments or responding.

He is still having events then. Also what about parking lot he created. Is that a code violation

Sent from AOL on Android

On Mon, Feb 24, 2025 at 8:43 AM, Volker Reiss <Volker.Reiss@bradentonFL.gov> wrote:

Dear Mr. Power:

Yes, this went to the special magistrate hearing in February and was found in violation.

VOLKER REISS
Code Compliance Manager

941-932-9402
941-290-9337
101 Old Main Street, Bradenton, FL 34205
BradentonFL.gov

From: Donald Power <pwrfml@aol.com>
Sent: Saturday, February 22, 2025 9:30 PM
To: Volker Reiss <Volker.Reiss@bradentonFL.gov>
Subject: RE: [EXTERNAL] Code violation complaint

You don't often get email from pwrfml@aol.com. Learn why this is important

[EXTERNAL EMAIL] This email originated from outside the City's email system, therefore the authenticity of the sender cannot be established. Exercise caution before clicking links, opening attachments or responding.

Good evening. He is having another large rental party at this location tonight i took videos and pictures. Did it go to court?

Sent from AOL on Android

On Mon, Nov 25, 2024 at 9:54 AM, Volker Reiss <Volker.Reiss@bradentonFL.gov> wrote:

> Dear Mr. Powers:
>
> This case is scheduled to go to a Special Magistrate hearing on January 7, 2025 for the non-compliance.
>
> **VOLKER REISS**
> *Code Compliance Manager*
> bradenton
> The Friendly City
> 941-932-9402
> 941-290-9337
> 101 Old Main Street, Bradenton, FL 34205
> BradentonFL.gov
>
> **From:** Donald Power <pwrfml@aol.com>
> **Sent:** Friday, November 22, 2024 3:23 PM
> **To:** Volker Reiss <Volker.Reiss@bradentonFL.gov>
> **Subject:** Re: [EXTERNAL] Code violation complaint
>
> You don't often get email from pwrfml@aol.com. Learn why this is important
> **[EXTERNAL EMAIL]** This email originated from outside the City's email system, therefore the authenticity of the sender cannot be established. Exercise caution before clicking links, opening attachments or responding.

Whatever happened?

Sent from AOL on Android

On Tue, Feb 20, 2024 at 8:19 AM, Volker Reiss <Volker.Reiss@bradentonFL.gov> wrote:

> Florida Statute Section 162.06(1)(b) requires that anyone who files a code enforcement complaint has to give his or her name and address. Please provide this information otherwise state law prohibits us from investigating your complaint. Thank you.
>
> Sincerely,
> Volker Reiss
> Community Services and
>
> Code Compliance Manager
> 941-932-9402 (Office)
>
> 941-290-9337 (Cell)
>
> "Keeping the Friendly City Beautiful"
>
> ---
>
> **From:** Code Enforcement <CodeEnforcement@bradentonfl.gov>
> **Sent:** Tuesday, February 20, 2024 8:13 AM
> **To:** Volker Reiss <Volker.Reiss@bradentonFL.gov>
> **Subject:** FW: [EXTERNAL] Code violation complaint
>
> Volker,
>
> Can you help Don Powers in the email below?
>
> Thanks,
>
> Kimberli

KIMBERLI JOY MURPHY | Code Compliance Coordinator | Code Enforcement

City of Bradenton, 101 Old Main Street,

Bradenton, FL 34205

941-932-9485 | kimberli.murphy@bradentonFL.gov

City Hall Hours: Monday-Thursday 7:30 am - 4:30 pm

Friday 7:30 am - 3:30 pm

think green...only print this email if necessary

From: Donald Power <pwrfml@aol.com>
Sent: Monday, February 19, 2024 9:24 AM
To: Code Enforcement <CodeEnforcement@bradentonfl.gov>
Subject: [EXTERNAL] Code violation complaint

You don't often get email from pwrfml@aol.com. Learn why this is important

[EXTERNAL EMAIL] This email originated from outside the City's email system, therefore the authenticity of the sender cannot be established. Exercise caution before clicking links, opening attachments or responding.

Good morning I have tried to be a good neighbor to this property owner but I have lost all respect and patience. He is operating an Event business out of his home having up to 100 people there at a time. I asked him to not park cars on my property and posted it with chains and signs that mysteriously are gone. The address is 1710 Manatee Avenue East.Here are his advertising sights.

https://www.kieventsmanatee.com/

https://www.bbb.org/us/fl/bradenton/profile/event-center/k-i-events-0653-90422445

Are they zoned to be able to do this?

Sent from AOL on Android

Florida has a very broad Public Records Law. This agency is a public entity and is subject to Chapter 119 of the Florida Statutes, concerning public records. E-mail communications are covered under such laws & therefore e-mail sent or received on this entity's computer system, including your e-mail address, may be disclosed to the public or media upon request.

The City of Bradenton shall not be held liable for use of ANY map or drawing attachment, which is provided as a public service for informational purposes. PLEASE NOTE that this information is NOT intended to be used as an authoritative public record for any geographic location, or as a legal document and shall have no legal force or effect. The City of Bradenton makes reasonable efforts to provide that data sent as an attachment is virus free, however the City of Bradenton assumes no responsibility for damages caused by the downloading or installation of this data. In addition certain individuals or entities may have proprietary interests in such data and the use of it without such parties' consent may be prohibited. Viewing or Use of the data indicates that user accepts the above conditions.

AGENDA ITEM NO. 7.g

Item Cover Page

PLANNING COMMISSION MEETING AGENDA ITEM REPORT

DATE: April 16, 2025

SUBMITTED BY: Greg DeLong, Planning & Community Development

ITEM TYPE: Ordinance

AGENDA SECTION: **AGENDA ITEMS**

SUBJECT: **Ordinance 4059, Case PLN-TXT-25-0001**:

An Ordinance of the City of Bradenton, Florida, amending the City of Bradenton's Land Use Regulations, Chapter 3, District Regulations, Section 3.2, standard Land Use Atlas District regulations, Schedule 3.2.1.2 Permitted and Special Uses Mixed-Use and Non-Residential Land Use Atlas Districts, to add docks and piers as a permitted use in the Urban Village Zoning District; providing for codification; providing for repeal of ordinances in conflict; providing for severability; and providing for an effective date. Application filed by the City of Bradenton Department of Planning and Community Development.

SUGGESTED ACTION: Motion to recommend to City Council either approval or denial of Ordinance 4059, Case PLN-TXT-25-0001.

Is this item Quasi-Judicial?
No

Does this item require a public hearing?
Yes

EXPLANATION:

The Department of Planning and Community Development has been approached by property owners in the UV (Urban Village) zoning district about installing docks on their properties.

The Land Use Regulations (LUR) currently prohibits docks in the UV District, which is the only zoning district listed in the LUR that does not permit them. It is unclear as to why the district excludes docks, especially since there are properties with water frontage.

FINANCIAL IMPACT:
N/A

ATTORNEY REVIEW/RECOMMENDATION:
Reviewed by City Attorney Rudacille.

SUGGESTED MOTION:
Motion to recommend either approval or denial of Ordinance 4059.

ATTACHMENTS:
Ordinance 4059 (DRAFT).pdf
Application.pdf
Staff Report.pdf

ORDINANCE 4059

AN ORDINANCE OF THE CITY OF BRADENTON, FLORIDA AMENDING THE CITY OF BRADENTON'S LAND USE REGULATIONS, CHAPTER 3, DISTRICT REGULATIONS, SECTION 3.2, STANDARD LAND USE ATLAS DISTRICT REGULATIONS, SCHEDULE 3.2.1.2 PERMITTED AND SPECIAL USES MIXED-USE AND NON-RESIDENTIAL LAND USE ATLAS DISTRICTS, TO ADD DOCKS AND PIERS AS A PERMITTED USE IN THE URBAN VILLAGE ZONING DISTRICT; PROVIDING FOR CODIFICATION; PROVIDING FOR REPEAL OF ORDINANCES IN CONFLICT; PROVIDING FOR SEVERABILITY; AND PROVIDING FOR AN EFFECTIVE DATE.

WHEREAS, Section 163.3167(c), Florida Statutes, authorizes the City to adopt and amend land development regulations to guide the growth and development of the City; and

WHEREAS, the City wishes to amend Schedule 3.2.1.2 of the City's Land Use Regulations to permit docks and piers in the Urban Village (UV) zoning district; and

WHEREAS, the UV zoning district abuts waterways within the City of Bradenton; and

WHEREAS, the amendment provides a use consistent with other zoning districts within the City that abut waterways; and

WHEREAS, in accordance with Section 166.041(3)(c), Florida Statutes, the City has held two duly noticed public hearings on May 14, 2025, and May 28, 2025, to obtain public comment related to the amendment set forth herein;

WHEREAS, having considered written and oral comments received during the public hearings, the City finds that the proposed text amendment to its Land Use Regulations is in the best interests of the health, safety, and welfare of the general public and the City's residents, furthers the purposes of, and is consistent with the City's Land Use Regulations, and is consistent and compliant with State law, including but not limited to Chapter 163, Part II, Florida Statutes.

NOW, THEREFORE, the City Council makes the following Findings of Fact and Conclusions of Law and issues the Final Order as follows:

Section 1. Findings of Fact. The foregoing whereas clauses are hereby adopted as findings of fact.

Section 2. Land Development Regulations Amendment. Schedule 3.2.1.2 of the Land Use Regulations is hereby amended to read as follows (underline indicates additions).

SCHEDULE 3.2.1.2 - continued
PERMITTED AND SPECIAL USES
MIXED-USE AND NON-RESIDENTIAL LAND USE ATLAS DISTRICTS

USE [1][5] [11]	UV [6]		UC/UCBD [3]		UCC		SCC		P		I	
	P	SU	P	SU	P	SU	P	SU	P	SU	P	SU
Docks and Piers * [4]	X		X		X		X		X		X	

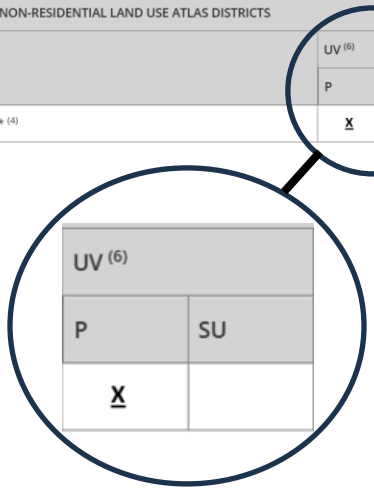

Section 3. Codification. The City Clerk shall ensure that this Ordinance shall be submitted for codification of the language in Section 2 herein upon taking effect.

Section 4. Repeal of Inconsistent Ordinances. This Ordinance hereby repeals all Ordinances, or parts thereof, in conflict herewith to the extent of such conflict.

Section 5. Severability. If any provision of this Ordinance or the application thereof to any person or circumstances is held invalid, the validity shall not affect other provisions or applications of the Ordinance which can be given effect without the invalid provision or application, and to this end the provisions of this Ordinance are declared severable.

Section 6. Effective Date. This Ordinance shall take effect as provided by law.

PUBLICATION DATE	May 4, 2025
FIRST READING AND HEARING	May 14, 2025
PUBLICATION DATE	May 18, 2025
SECOND READING AND HEARING	May 28, 2025

DRAFT

PASSED AND DULY ADOPTED BY THE CITY COUNCIL OF THE CITY OF BRADENTON, FLORIDA, with a quorum present and voting this 28th day of May, 2025.

CITY OF BRADENTON, FLORIDA

ATTEST:

_____ _____

Tamara Melton
CITY CLERK

Gene Brown
MAYOR

APPROVED AS TO FORM:

_____
Scott Rudacille
CITY ATTORNEY

DRAFT

PLN-TXT-25-0001

Menu Reports Help

File Date: 03/10/2025

Application Status: New

Assigned To:

Application Name:

Application Detail: Detail

Scope of Work: Update the use table in the Land Use Regulations to permit docks in the UV (Urban Village) zoning district.

Application Type: Zoning Text Amendment

Documents:

File Name	Document Group	Category	Description	Type	Document Status	Document Status Date

Show all

Address: 101 12TH St W, BRADENTON, FL 34205

Owner Name: BRADENTON CITY OF

Owner Address: CALLER SERVICE 25015, BRADENTON, FL 34206

Parcel No: 3294300003

Licensed Professionals Info:

Primary	License Number	License Type	Name	Business Name	Business License #

Application Comments:

View ID	Comment	Date

Initiated by Product: ACA

Contact Info:

Name	Organization Name	Contact Type	Status
Bradenton Planning	City of Bradenton	Applicant	Active

Job Value: $0.00

Total Fee Assessed: $0.00

Total Fee Invoiced: $0.00

Balance: $0.00

Custom Fields:

TEXT AMENDMENT
Zoning Ordinance to be Amended
Land Use Regulations

MEETING INFORMATION

Meeting Type	Date	Status

Workflow Status:

Task	Assigned To	Status	Status Date	Action By
Intake	Jamie Schindewolf			
Case Manager				
Building Review				
Public Works Review				
Planning Review				
Fire Review				
Other Reviews				
Review Consolidation				
DRC				
Planning Commission				
City Council #1				
City Council #2				

Condition Status:

Name	Short Comments	Status	Apply Date	Severity	Action By

Scheduled/Pending Inspections:

Inspection Type	Scheduled Date	Inspector	Status	Comments

Resulted Inspections:

Inspection Type	Inspection Date	Inspector	Status	Comments

SCHEDULE 3.2.1.2 - continued PERMITTED AND SPECIAL USES MIXED-USE AND NON-RESIDENTIAL LAND USE ATLAS DISTRICTS												
USE [1][5] [11]	UV [6]		UC/UCBD [3]		UCC		SCC		P		I	
	P	SU	P	SU	P	SU	P	SU	P	SU	P	SU
Docks and Piers * [4]	**X**		X		X		X		X		X	

City of Bradenton
Department of Planning & Community Development
Planning Commission
April 16, 2025

Ordinance 4059 | PLN-TXT-25-0001
Staff Report

An Ordinance of the City of Bradenton, Florida, amending Bradenton Land Use Regulations Schedule 3.2.1.2 "Permitted and Special Uses Mixed-Use and Non-Residential Land Use Atlas Districts"; providing for codification, providing for repeal of ordinances in conflict, providing for severability; and providing for an effective date. Application filed by the City of Bradenton Department of Planning and Community Development.

The Department of Planning and Community Development has been approached by property owners in the UV (Urban Village) zoning district about installing docks on their properties. The Land Use Regulations (LUR) currently prohibits docks in the UV District, which is the only zoning district listed in the LUR that does not permit them. It is unclear as to why the district excludes docks, especially since there are properties with water frontage. Ironically the Industrial (I) District permits docks, and the Industrial zoning classification is found at three locations:

1. Tropicana
2. Lynch Oil (878 12th Street East)
3. Robert G. Matzke Support Center for Manatee County Schools (26th Avenue East & Matzke Way).

According to the Future Land Use Element of the Comprehensive Plan:

> *The Urban Village includes areas near the fringe of the Urban Core and is anticipated to develop with the character, lifestyle, and friendliness of a village based on the concepts of new urbanism. Permitted uses within the Urban Village encourage the development of a district with a distinct sense of place, walkable environment that supports and enhances abutting neighborhood areas. Desired uses in the Urban Village include small lot single-family dwellings, multiple-family rowhouses and midrise housing types, flex houses, providing live-work opportunities, professional and medical offices, retail stores, artisanal uses, restaurants, personal services, and professional services, civic and recreation uses, greenspace. Climate controlled storage facilities that are vertically mixed with other permitted uses can be considered with a special use permit if located on an arterial roadway; they are prohibited as a stand-alone use. Auto-oriented uses such as gas stations, car washes, vehicles sales, auto repair, vehicle storage,*

outdoor storage, and drive thru's are prohibited. Outdoor storage is prohibited.

The proposed amendment will modify Schedule 3.2.1.2 of the LUR by adding docks as a permitted use in the UV District.

SCHEDULE 3.2.1.2 - continued
PERMITTED AND SPECIAL USES
MIXED-USE AND NON-RESIDENTIAL LAND USE ATLAS DISTRICTS

USE (1)(5) (11)	UV (6)		UC/UCBD (3)		UCC		SCC		P		I	
	P	SU	P	SU	P	SU	P	SU	P	SU	P	SU
Docks and Piers * (4)	X		X		X		X		X		X	

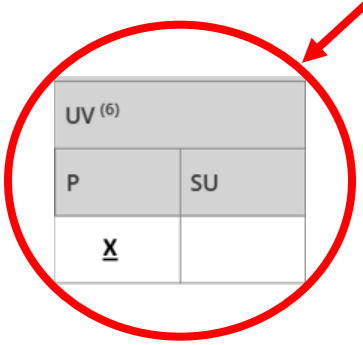

It appears that the proposed request is compatible with permitted uses in the LUR and that is also meets the objectives of the Future Land Use Element of the Comprehensive Plan.

Sincerely,

Gregory J. DeLong
Assistant Director of Planning & Community Development

AGENDA ITEM NO. 10.a

Item Cover Page

PLANNING COMMISSION MEETING AGENDA ITEM REPORT

DATE: April 16, 2025

SUBMITTED BY: Greg DeLong, Planning & Community Development

ITEM TYPE: Miscellaneous

AGENDA SECTION: ANNOUNCEMENT OF CITY COUNCIL PUBLIC HEARING DATES

SUBJECT:

February 26, 2025:

- Resolution 25-25 - Special Use Permit for a Medical Clinic at 509 9th Street East (approved with stipulations, vote 5-0)

March 12, 2025:

- Resolution 25-24 - Special Use Permit for a Sidewalk Cafe with Alcoholic Beverages at 316 12th Street West (approved with stipulations, vote 5-0).

March 26, 2025:

- No Planning Commission related items on the agenda.

April 9, 2025:

- No Planning Commission related items on the agenda.

April 23, 2025:

- Currently no Planning Commission related items on the agenda.

May 14, 2025: Items from the April 16, 2025, Planning Commission meeting.

- Resolution 25-41 - Special Use Permit for a Sidewalk Cafe with Alcoholic Beverages at 450 12th Street West
- Resolution 25-40 - Special Use Permit for a

Sidewalk Cafe with Alcoholic Beverages at 1166 3rd Avenue West
- Resolution 25-39 - Special Use Permit for a Nursing Home at 2726 6th Avenue West
- Resolution 25-38 - Special Use Permit for a Club (Event Center) at 1710 Manatee Avenue East
- Ordinance 4059 - Land Use Regulations Text Amendment to permit docks in the UV zoning district (1st Reading)

SUGGESTED ACTION:

Is this item Quasi-Judicial?
No

Does this item require a public hearing?
No

ATTACHMENTS: