CITY OF SOLEDAD
JOINT CITY COUNCIL/SUCCESSOR AGENCY/HOUSING AUTHORITY AND SUCCESSOR HOUSING AGENCY REGULAR MEETING AGENDA

WEDNESDAY, NOVEMBER 6, 2024

CITY HALL, COUNCIL CHAMBERS

6:00 PM

The public meeting will open at 6:00 p.m. and, after taking public comment for closed session items, the Council will immediately recess to closed session.

Join Zoom Meeting
https://cityofsoledad.zoom.us/j/82831122300
Or Call
1-669-900-6833 and use Meeting ID: 828 3112 2300

Welcome to your City of Soledad City Council/Successor Agency Meeting. Your City Councilmembers/Agencymembers are:

Mayor Anna Velazquez
Mayor Pro Tem Maria Corralejo
Councilmember Fernando Cabrera
Councilmember Fernando Ansaldo-Sanchez
Councilmember Evarista Banuelos

I. CALL TO ORDER

II. ROLL CALL

III. PUBLIC COMMENT - CLOSED SESSION ITEMS

At this time, any member of the public may address the Council/Agency on Closed Session items appearing on the agenda. Speakers shall have limited time of three (3) minutes. Please be brief and to the point.

IV. CLOSED SESSION

The City Council will recess to closed session pursuant to Government Code Section 54956.8 to give instructions to the City's negotiator concerning the purchase of property located at 1232 Monterey Street, Assessor Parcel Number 022-042-015-000. Instructions may include price and terms of payment.

V. CLOSED SESSION REPORTS

VI. PLEDGE OF ALLEGIANCE

VII. ADDITIONS/MODIFICATIONS TO THE AGENDA

At this time, any member of the public may address the Council/Agency on Closed Session items appearing on the agenda. Speakers shall have limited time of three (3) minutes. Please be brief and to the point.

VIII. PUBLIC COMMENT

At this time any member of the public may address the City Council on items not appearing on the agenda and items of interest to the public that are within the jurisdiction of the Council. A public comment card should be filled out completely to ensure the speaker is called upon to give comment. Public comments are generally limited to three (3) minutes; the mayor may further limit the time for public comments depending on the agenda schedule. Please be brief and to the point. No action or discussion shall be taken on an item not appearing on the agenda.

IX. COUNCIL PRESENTATIONS

1. A Proclamation of the City Council of the City of Soledad in Support of Shop Local and Small Business Saturday

Attachments:
Staff Report

2. A Proclamation of the City Council of the City of Soledad observing November 2024 as National Alzheimer's Disease Awareness Month, to honor those with Alzheimer's, their families and caregivers.

Attachments:
Staff Report

3. Monterey County Business Council Chief Operations Officer Paul Farmer, and Kosmont Vice President Robert Valenti will give a Presentation regarding the Soledad Retail Market Assessment.

Attachments:
Staff Report
Kosmont MCBC Retail Assessment Presentation

X. CONSENT CALENDAR

1. Minutes

Attachments:
Staff Report
Minutes of 10-23-2024

COUNCIL ACTION: _____

2. Warrants

Attachments:
Staff Report
055762 - 055931

COUNCIL ACTION: _____

3. Human Resources Activity Report

Attachments:
Staff Report

COUNCIL ACTION: _____

4. Police Department Activity Report

Attachments:
Staff Report
Police Activity Report

COUNCIL ACTION: _____

5. Public Works Activity Report

Attachments:
Staff Report
Activity Report & Pictures

COUNCIL ACTION: _____

6. Fire Department Activity Report

Attachments:
Staff Report
Soledad Activity Report 10.2024.pdf
10.2024 Call Volume.pdf

COUNCIL ACTION: _____

7. Community and Economic Development Department Activity Report

Attachments:
Staff Report
Building Permits Issued Oct. 2024

COUNCIL ACTION: _____

8. Office of Community Engagement, Department Activity Report

Attachments:
Staff Report

COUNCIL ACTION: _____

9. Accept by Minute Motion an Update and Closeout of the Emergency Declaration Regarding the City's Water System from the July 31, 2024, Soledad City Council meeting.

Attachments:
Staff Report

COUNCIL ACTION: _____

10. Resolution No. 6168, A Resolution of the City Council of the City of Soledad Approving In-Kind Services, Park Use Fee Waiver, and Street Closure of Front Street between Main Street and Soledad Street for the 38th Annual Christmas and Festivities Event at Cesar Chavez Park

Attachments:
Staff Report
Resolution No. 6168
Attachment 1
Attachment 2

COUNCIL ACTION: _____

11. Resolution No. 6169, A Resolution of the City Council of the City of Soledad Approving an Agreement with Cannon Corporation for a Water System Facilities – Reliability and Condition Assessment in the Amount Not to Exceed $151,700 and Authorizing the City Manager to Execute Said Agreement on Behalf of the City of Soledad

Attachments:
Staff Report
Resolution No. 6169
Exhibit A - Cannon Corporation Agreement
Soledad Wells-Forebay Aquifer

COUNCIL ACTION: _____

12. Resolution No. 6170, A Resolution of the City Council of the City of Soledad Declaring Surplus Office Furniture and Authorizing the Sale, Donation or Disposal of Such Property

Attachments:
Staff Report
Resolution No. 6170

COUNCIL ACTION: _____

13. Resolution No. 6171, A Resolution of the City Council of the City of Soledad Approving the Memorandum of Understanding (MOU) Between the City of Soledad and the Hartnell College Foundation for of the S.O.A.R Ambassadors Pilot Program - Asset Mapping Project

Attachments:
Staff Report
Resolution No. 6171

Hartnell MOU - Asset Mapping YCELD

COUNCIL ACTION: _____

14. Resolution No. 6174, A Resolution of the City Council of the City of Soledad Accepting the California Highway Patrol FY 24/25 CTFGP Cannabis Tax Fund Program Education and Enforcement Grant, Authorizing the City Manager to Execute the Standard Agreement, and Approving a Related Budget Amendment to the Fiscal Year 24/25 Budget

Attachments:
Staff Report
Resolution No. 6174
FY24-25 CTFGP Grant Agreement â€“ Soledad PD
Award Letter

COUNCIL ACTION: _____

XI. BUSINESS

1. Presentation on the Salinas Valley Safe Routes to Schools Plan

Attachments:
Staff Report
Salinas Valley Safe Routes to Schools Plan Executive Summary
Soledad Safe Routes to Schools Plan
Soledad Draft Plan

COUNCIL ACTION: _____

2. Resolution No. 6172, a Resolution of the City Council of the City of Soledad Approving a Contract Change Order for Construction Services with Monterey Peninsula Engineering for the Amount of $123,000 plus a 20% Construction Contingency ($24,600) for a total Not-to-Exceed Amount of $147,000 for the Front Street Maintenance Project and Authorizing the City Manager to Execute Said Contract Change Order on Behalf of the City of Soledad

Attachments:
Staff Report
Resolution No. 6172
Exhibit A

COUNCIL ACTION: _____

3. Resolution No. 6173, a Resolution of the City Council of the City of Soledad Approving a Contract Change Order for Construction Services with David Construction & Management, Inc. in the Amount of $66,287 Plus a 20% Construction Contingency of $13,260 for a Total Not-To-Exceed Amount of $79,547 for the Soledad Community Center Building Modernization Project And Authorizing the City Manager to Execute Said Contract Change Order on Behalf of the City of Soledad

Attachments:
Staff Report

Resolution No. 6173
Exhibit A
CC Project Presentation

COUNCIL ACTION: _____

XII. MAYOR'S REPORTS AND ACKNOWLEDGEMENTS

XIII. COUNCILMEMBERS' REPORTS AND ACKNOWLEDGEMENTS

XIV. CITY MANAGER'S REPORT

XV. FUTURE AGENDA ITEMS

XVI. ADJOURNMENT

In compliance with the American with Disabilities Act, if you need special assistance to participate in this meeting, please contact Deputy City Clerk Darlene Noriega at (831) 223-5014. Notification of at least 48hours prior to the meeting will enable the City to make reasonable arrangements to ensure accessibility to this meeting. (RCRF 35.102-35.104).

Any writing or documents provided to a majority of the City Council regarding any item on this agenda will be made available for public inspection at City Hall located at 248 Main Street, Soledad, California during normal business hours.

En caso que usted necesite ayuda en leer o en entender este aviso de Junta Publica, usted puede ponerse en contacto con la oficina del Edificio Municipal en 248 Calle Main o llamar al número (831) 223-5014, y el aviso será traducido para usted.

Cualquier escrito o documento proporcionado a la mayoría del Concejo Municipal con respecto a cualquier asunto en esta agenda se pondrá a disposición para inspección pública en el Ayuntamiento ubicado en 248 Main Street, Soledad, California durante el horario laboral.

Advanced submittal of public comments via email are due by 2:00 P.M. on the day of the scheduled meeting to the Deputy City Clerk at darlene.noriega@cityofsoledad.com Comments are limited to 250 words or less and effort will be made to read your comment into the record, but some comments may not be read due to time limitations. The City Clerk will read email comments, provided that the reading shall not exceed three (3) minutes. The email comments submitted shall become part of the record.

La entrega anticipada de comentarios públicos por correo electrónico debe presentarse antes de las 2:00 p.m. del día de la reunión programada a la Secretaria Municipal al email darlene.noriega@cityofsoledad.com. Los comentarios están limitados a 250 palabras o menos y se hará un esfuerzo para leer su comentario en el registro, pero es posible que algunos comentarios no se lean debido a limitaciones de tiempo. La Secretaria Municipal leerá los comentarios del correo electrónico, siempre que la lectura no exceda los tres (3) minutos. Los comentarios enviados por correo electrónico pasarán a formar parte del registro.
.

CERTIFICATION

I, Megan Hunter, City Clerk of the City of Soledad, do hereby certify that a copy of the foregoing Joint City Council/Successor Agency Regular Meeting Agenda was posted at City Hall by Friday, November 1, 2024, at 5:00 p.m.

Megan Hunter _____ 11/01/2024

Megan Hunter, City Clerk/Manager

AGENDA ITEM NO. 1.

COUNCIL COMMUNICATION

SUBJECT: **A Proclamation of the City Council of the City of Soledad in Support of Shop Local and Small Business Saturday**

TO: **Honorable Mayor Velazquez and City Council**

FROM: **Jesus Valenzuela, Community Engagement Manager**

THROUGH: **Megan Hunter, City Manager**

MEETING DATE: **November 6, 2024**

AGENDA ITEM NO. 2.

COUNCIL COMMUNICATION

SUBJECT: **A Proclamation of the City Council of the City of Soledad observing November 2024 as National Alzheimer's Disease Awareness Month, to honor those with Alzheimer's, their families and caregivers.**

TO: **Honorable Mayor Velazquez and City Council**

FROM: **Jesus Valenzuela, Community Engagement Manager**

THROUGH: **Megan Hunter, City Manager**

MEETING DATE: **November 6, 2024**

AGENDA ITEM NO. 3.

COUNCIL COMMUNICATION

SUBJECT: **Monterey County Business Council Chief Operations Officer Paul Farmer, and Kosmont Vice President Robert Valenti will give a Presentation regarding the Soledad Retail Market Assessment.**

TO: **Mayor Velazquez and City Council**

FROM: **Kao Nou Yang, Community and Economic Development Director**

THROUGH: **Megan Hunter, City Manager**

MEETING DATE: **November 6, 2024**

MONTEREY COUNTY BUSINESS COUNCIL

PRESENTATION TO SOLEDAD

RETAIL MARKET ASSESSMENT

October 2024

El Segundo, CA
TEL: 424-297-1070 | URL: www.kosmont.com

Kosmont Retail NOW!®

BACKGROUND

- Kosmont Companies ("Kosmont") has been retained to assist the Monterey County Business Council ("MCBC" or "Client") in connection with a Retail Market Assessment ("Assessment") utilizing its Kosmont Retail NOW!® platform. Client would like to develop an understanding of the local economy, market conditions / trends, and the commercial / retail areas of King City, Soledad, Greenfield, and Gonzales ("Cities") in the South Monterey County Region ("Region"), to inform plans for developing a comprehensive approach to retail amongst the four Cities. Main goals of the Assessment are to understand the local retail environment, increase local sales and transient occupancy taxes, and better meet the retail needs of the Region's communities.

- Kosmont is a nationally-recognized real estate and economics advisory firm serving hundreds of public and private sector clients for 38 years. Kosmont's experience covers a range of services as follows:
  - Market and Feasibility Analyses
  - Fiscal Impact and Economic Benefit Studies
  - Economic Development Strategies and Implementation
  - Business/Retailer and Developer Recruitment
  - Identification of Funding Sources and Financing Strategies
  - Public-Private Transaction Structuring and Negotiation Assistance

EXECUTIVE SUMMARY

- The Region and Cities have seen population growth in recent decades and are poised to see continuing population growth as housing development continues in the Cities.

- While the retail market in the Region is generally stable, the Region also faces retail competition from surrounding communities / shopping centers – particularly the strong regional retail cluster in Salinas. While vacancy generally remains low, the Cities would like to improve retail tenancy in existing spaces (including spaces in existing shopping centers as well as older retail spaces in historic downtown main street areas) and would also like to stimulate additional retail development – particularly along the US-101 corridor – that can both serve local residents as well as attract visitors traveling through the Region.

- The retail market is being shaped by modern consumer forces. Consumer need for convenience including omni-channel shopping options (i.e., e-commerce, buy online pick up in store (BOPIS), mobile technologies) and desire for curated / engaging retail experience is reshaping demand for brick-and-mortar retail, as well as driving new demand and redevelopment.

EXECUTIVE SUMMARY (CONT'D)

- Each City has key Opportunity Sites – such as existing shopping centers, downtown commercial areas, and undeveloped sites along the US-101 freeway – that have some potential for retail and hospitality development. These sites are unlikely to fully develop as retail projects due to the limited size of the trade area, but some retail development is likely suited. The Cities in the region should aim for flexibility with these sites, as successful projects will likely be mixed / blended use concepts that combine retail with high-demand uses such as residential and industrial.

- At this time, new retail developments are experiencing financial feasibility challenges, due to high land values (driven by residential and industrial demand), high construction costs, and relatively high interest rates.

- Cities can explore tools to motivate private investment, which includes programs to encourage improvements at shopping centers to add retail viability (such as façade / landscaping / signage improvements), business expansion / attraction / retention and marketing exercises, and zoning strategies / regulatory flexibility to better facilitate an additional complementary blend of uses.

REGIONAL ASSETS

COMMUNITY ASSETS THAT CAN BE LEVERAGED FOR ECONOMIC DEVELOPMENT

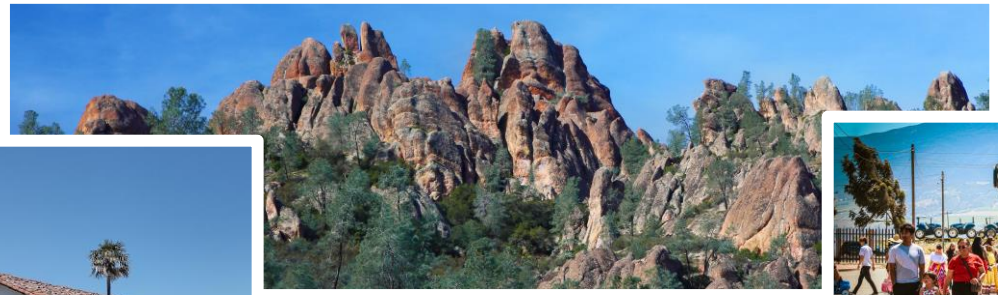

Agricultural	Natural	Cultural
Farming / Agribusiness Wine Country	Pinnacles National Park Salinas River / Arroyo Seco	Historic Downtowns Mission Soledad Los Coches Adobe

DEMOGRAPHIC, TAX REVENUE, AND EMPLOYMENT DATA SUMMARY

- The Region has a population of ~75,000 people and has grown ~30% since the early 2000s, with additional growth expected as new housing is developed.
- Region has lower levels of bachelor degree attainment, higher Hispanic population, and lower average household incomes compared to County averages.
- Household expenditure data shows that Households within the Region have average household incomes of ~$92,100 and spend ~$19,100 on key brick-and-mortar retail and service categories, equating to ~$311.7 million in annual spending in these categories.
- Taxable Retail Sales data shows ~$331 million in taxable sales in 2023 from retail and food services; large business categories include Gasoline Stations, Food Service / Drinking Places, and Food / Beverage Stores. Over the past 5 years, growth has occurred in the Building Materials / Garden Equipment / Supplies Dealers, General Merchandise Stores, and Food Services / Drinking Places categories.
- Property tax, sales tax, and transient occupancy tax growth has slightly outpaced County and State baselines since 2018.
- Region sees a net outflow of workers, with residents commuting to Salinas, San Jose, Monterey, and other communities. Major industry sectors in the Region include Agriculture, Public Administration, Educational Services, and Healthcare / Social Assistance.
- Recent / upcoming development projects in the Region include a variety of residential projects that are likely to add over 6,000 housing units over the coming years; other commercial and hotel development is expected in the near future as well, with several projects in the planning phase – demonstrating continued market interest in the Region.

RETAIL MARKET OVERVIEW

- Approx. 1.4 million square feet of retail inventory in the Region, with a fairly low vacancy rate of 1.7%.
- Annual market rents ~$23 per square foot (increasing ~8.2% over the past three years).
- Inventory has grown ~65,500 SF since 2019 and is currently seeing slightly positive net absorption. No retail construction currently underway in the Region.
- A significant share of retail inventory is located in neighborhood and strip centers that generally serve the local market (grocery, restaurants, shops and services). Major retail tenants include several supermarkets, hardware stores, drug stores, dollar / variety / thrift stores, automotive supplies, and restaurants.
- Mobile visitor data shows that US-101 sees significant daily traffic, with peaks during commute hours and weekends, offering potential for capturing traveler spending. Local shopping centers show stable visitation, with anchor retailers performing at or near average levels.

	Soledad	Region
Population	25,000	74,600
Households	4,480	16,320
Median Age	30.8	29.7
Bach. Degree +	6.6%	9.6%
Average HH Income	$98,200	$92,100
Retail Data		
Inventory SF	420,300	1,389,000
Vacant SF	5,500	23,799
Vacant %	1.3%	1.7%
Market Rent	$25.69	$22.72
Net Absorption SF (12mo)	7,500	6,600
Inventory Growth SF (since 2018)	58,300 16.1%	65,450 4.9%

Source: CoStar, ESRI, Placer.ai (Accessed July / August 2024)

STRENGTHS, WEAKNESSES, OPPORTUNITIES, THREATS

Strengths	Weaknesses	Opportunities	Threats
Strategic Location Market Voids Proximity to Attractions Community Character	Small Market Size Competition From Larger Cities Infrastructure Development Costs Property Owners	Retail Development Tourism Growth Public-Private Partnerships Regulatory Flexibility	Economic Fluctuations E-commerce Competition Retailer Expansion Criteria

ECONOMIC CHALLENGES: RETAIL DEVELOPMENT FEASIBILITY

The commercial real estate market – particularly the retail and office markets – is facing a number of significant challenges due to economic, financial and market conditions:

- Inflation and construction costs
- Interest rates are relatively high and financial markets are responding
- E-commerce
- Work-from-home

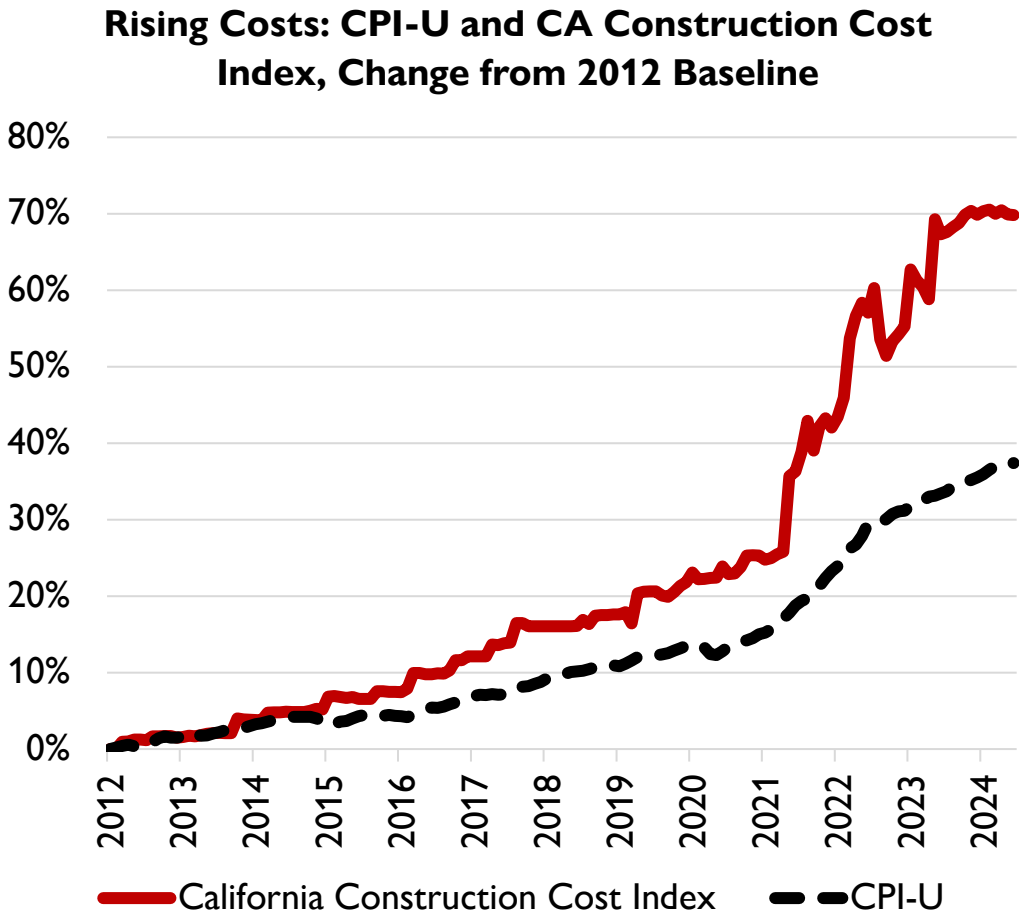

Source: FRED, CA Dept. of General Services

COMPETITION CHALLENGES: THE BARBELL EFFECT

The Region is flanked by major retail clusters; this presents a competitive challenge to retail development in the Region.

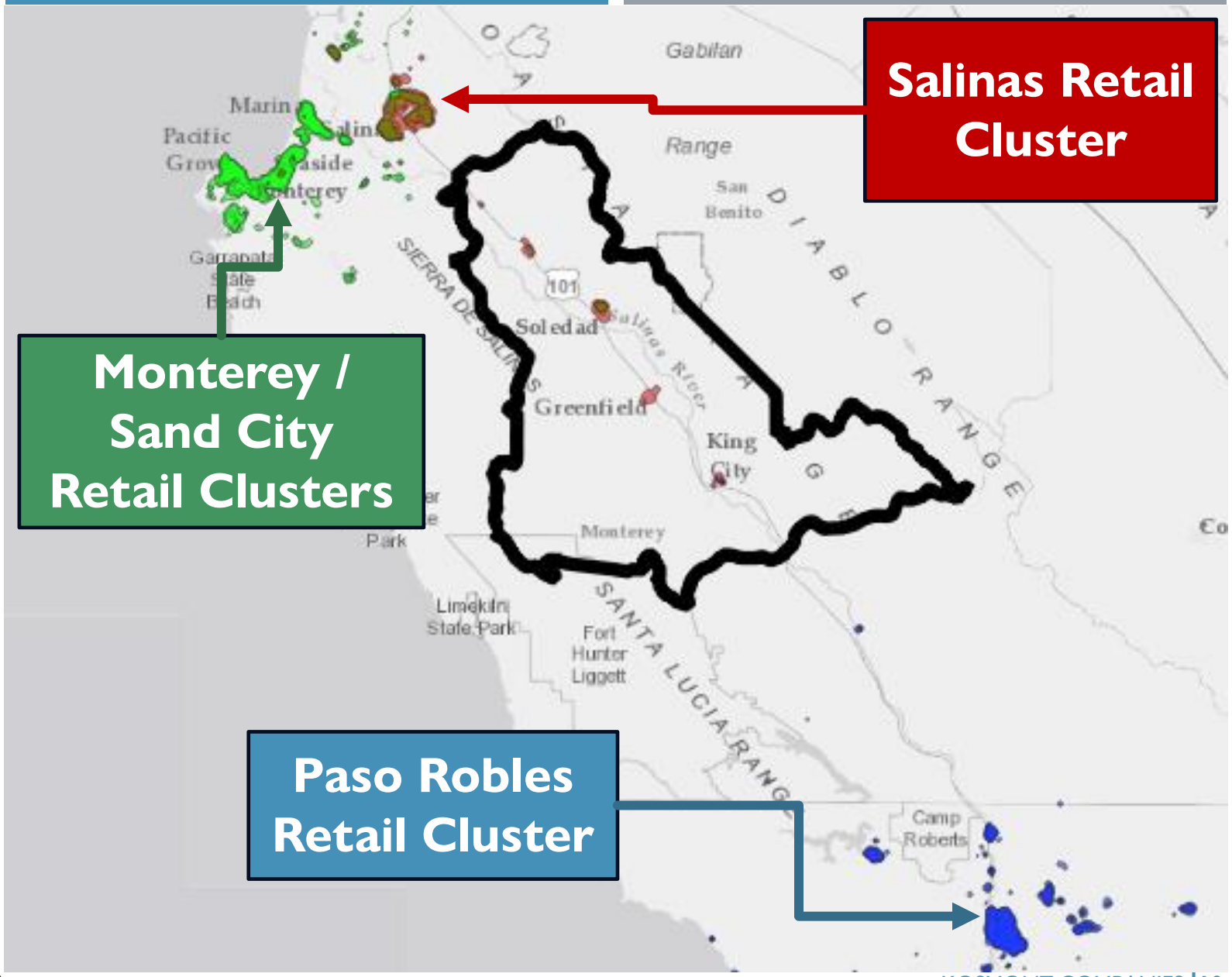

Source: Placer.ai, CoStar
Note: Cluster data only representative of select shopping center areas and not all retail properties

CHALLENGES & OPPORTUNITIES
POPULATION – MARKET SIZE & HOUSING DEVELOPMENT

Challenge

The region's small, rural market size limits the potential for substantial retail development, despite 30% population growth over the past 25 years.

Opportunity

Significant housing projects in the pipeline can drive further population growth, which in turn can support local retail.

Recommendation

Encourage blended-use developments on large sites near US-101, incorporating residential units alongside retail space to maximize financial viability and meet future demand.

CHALLENGES & OPPORTUNITIES
RETAIL LEAKAGE AND COMPETITIVE ENVIRONMENT

Challenge

Significant retail leakage occurs as local residents travel to larger retail clusters in Salinas for goods and services not available within the Region.

Opportunity

There is potential to capture some of this leakage by attracting new retail development in underserved / expanding categories.

Recommendation

Conduct outreach to developers and retailers to explore opportunities for capturing this local spending, focusing on retail formats suitable for the Region's market.

CHALLENGES & OPPORTUNITIES
US-101 TRAVELERS & TOURISM

Challenge

Region sees local / regional / visitor traffic along US-101 corridor, but much of this traffic is related to commuter travel or visitors passing through.

Opportunity

The region can capture more sales by developing freeway-adjacent retail and hospitality services that attract and cater to travelers.

Recommendation

Focus on marketing / events that draw tourists to local destinations and local retail districts, while also leveraging freeway-adjacent opportunity sites for traveler-oriented retail development.

RETAIL TENANT PRIORITIES

Potential commercial developers / tenants have a variety of factors that they prioritize when evaluating new development projects:

- **Demand / Trade Area Thresholds**
- **Anchor Tenants**
- **Traffic / Visibility**
- **Site Accessibility / Circulation**
- **Consumer Convenience**
- **Competitive Retail Rates**

SOLEDAD
OPPORTUNITY OVERVIEW

- **Downtown Soledad** shows good opportunity, with no retail vacancy and major improvements underway for Front Street that will help to further activate the area. The planned container village concept can help to drive additional activity to the area and provide vital space for up-and-coming businesses.
- **Soledad Marketplace** has seen growing activity as Grocery Outlet and Dutch Bros drive visits to the center, and Premier Cinemas can be a vital entertainment venue for the Region. Good opportunities for new retailers to join the center, as well as restaurant / entertainment / brewery uses in the space adjacent to the Cinema.
- **The Miranda & San Vicente Site** is a large US-101 adjacent vacant site that has some potential for a mixed-use development that combines commercial and residential uses – potentially freeway serving retail, dining, hospitality.

IMPLEMENTATION TOOLS & STRATEGIES

Communities can use a variety of strategies and tools to support existing businesses and attract new development:

- **Business Expansion, Attraction, and Retention Activities**
- **Programs and Policies to Support Local Businesses**
- **Property Owner Collaboration & Project Shaping**
- **Infrastructure Improvements**
- **Building Partnerships and Outreach**
- **Events & Activities**
- **Marketing**
- **Community Engagement**

MONTEREY COUNTY BUSINESS COUNCIL

PRESENTATION TO SOLEDAD

RETAIL MARKET ASSESSMENT

October 2024

El Segundo, CA
TEL: 424-297-1070 | URL: www.kosmont.com

Kosmont Retail NOW!®

AGENDA ITEM NO. 1.

COUNCIL COMMUNICATION

SUBJECT: **Minutes**

TO: **Mayor Velazquez and City Council**

FROM: **Darlene Noriega, Deputy City Clerk**

THROUGH: **Megan Hunter, City Manager**

MEETING DATE: **November 6, 2024**

Minutes

City of Soledad
Joint City Council/Successor Agency/Housing Authority/Successor Housing Agency/
Special Meeting
October 23, 2024

CALL TO ORDER

Mayor Velazquez called the Joint City Council/ Successor Agency/ Housing Authority/ Successor Housing Agency/ Special Meeting to order at 6:06 p.m.

ROLL CALL

The Following Councilmembers/Agency members were present when the meeting was called to order:

Mayor/Chair	Anna M. Velazquez
Mayor Pro Tem/Vice Chair	Maria Corralejo
Councilmember/Agency Member	Fernando Cabrera
Councilmember/Agency Member	Evarista Bañuelos

THE FOLLOWING COUNCILMEMBER WAS ABSENT

Councilmember/Agency Member	Fernando Ansaldo-Sánchez

PLEDGE OF ALLIGIANCE

Maury Treleven led the Pledge of Allegiance

ADDITIONS/MODIFICATIONS TO THE AGENDA

City Manager Hunter had 1 modification request:

1. Consideration of item No. B-3 before item B-2.

PUBLIC COMMENT

None

COUNCIL PRESENTATIONS

1. Community Engagement Manager Jesus Valenzuela and Tri-Cities Disposal & Recycling Special Projects Consultant Maury Treleven gave a presentation regarding the citywide garage sale and citywide clean up events.

2. A Certificate of Appreciation was presented to the Soledad High School NJROTC (Navy Junior Reserve Officers Training Corps) for their support and hard work in the City of Soledad/Tri-Cities Disposal & Recycling event on September 21, 2024. Senior Naval Science Instructor Captain Pete Gomez was present in the meeting and accepted the certificate.

Motion: Mayor Pro Tem Corralejo made motion to approve Consent items C-1 through C-4. Motion was seconded by Councilmember Cabrera and carried by the following vote:

Action

Ayes:	Corralejo, Cabrera, Bañuelos, Velazquez
Noes:	None
Abstain:	None
Absent:	Ansaldo-Sánchez

CONSENT

1. Minutes of 10-02-2024

2. Warrants 055655 – 055752

3. Accept by Minute Motion an Update on the Emergency Declaration regarding the City's water system from July 31, 2024, Soledad City Council meeting.

4. Approve by Minute Motion an Increase to the Jarvis Fay LLP Litigation rates

PUBLIC HEARING

1. A Public Hearing for Resolution No. 6166, A Resolution of the City Council of the City of Soledad Approving the Submittal of the Community Development Block Grant (CDBG) Application under the 2024 Funding Cycle.

Housing Analyst Beatriz Trujillo and CDBG Consultant Susan Long presented the staff report and a PowerPoint for the item.

- Receive the Staff Report
- Open the Public Comment – 6:51 p.m.
- Close the Public Comment – 6:52 p.m.
- Council Action

Mayor Velazquez requested the council receive a timeline and marketing plan. She would like the plan to expand to families that may not be ready now but can be financially ready in the future.

There were no public comments.

Motion: Councilmember Banuelos made a motion to approve Resolution No. 6166. Motion was seconded by Councilmember Cabrera and carried by the following vote:

Action
Ayes: Bañuelos, Cabrera, Corralejo, Velazquez
Noes: None
Abstain: None
Absent: Ansaldo-Sánchez

BUSINESS

1. Resolution No. 6165, A Resolution of the City Council of the City of Soledad Approving and Authorizing the City Manager to Execute an Affordable Housing Agreement between the City of Soledad and Soledad Unified School District for the Workforce Housing Project located at 500 Monterey Street

Housing Analyst Beatriz Trujillo presented the staff report.

Soledad Unified School District Superintendent Randy Bangs, Chief Business Official Sarah Doherty, and Thompson Dorfman Partners, LLC Consultant Marlon Just-Vargas were available on Zoom for any questions.

Motion: Mayor Pro Tem Corralejo made a motion to approve Resolution No. 6165. Motion was seconded by Councilmember Cabrera and carried by the following vote:

Action
Ayes: Corralejo, Cabrera, Bañuelos, Velazquez
Noes: None
Abstain: None
Absent: Ansaldo-Sánchez

3. Resolution No. 6167, A Resolution of the City Council of the City of Soledad Approving and Authorizing the City Manager to Execute a Memorandum of Understanding with Soledad Unified School District for the Sale, Purchase and Delivery of Recycled Water

Public Works Director Don Wilcox presented the staff report.

Soledad Unified School District Superintendent Randy Bangs was present in the meeting to clarify any information needed.

Motion: Councilmember Banuelos made a motion to approve Resolution No. 6167. Motion was seconded by Mayor Velazquez and carried by the following vote:

Action
Ayes: Banuelos, Velazquez, Cabrera, Corralejo
Noes: None
Abstain: None
Absent: Ansaldo-Sánchez

2. Presentation on the Fire Aerial Apparatus Bay Project

Assistant Engineer Alex Ramos presented the staff report.

Councilmembers had numerous questions and comments regarding the item.

TL Principal Engineer Leo Trujillo was present in the meeting via Zoom, available to clarify any information needed.

CalFire Battalion Chief Jason Luckenbach also provided further information and was available to answer questions.

Council Action:
No action was taken.
The presentation was received by the City Council.

MAYOR REPORTS AND ACKNOWLEDGEMENTS

1. On 10/09 she attended a meeting with Congresswoman Zoe Lofgren, City Manager Hunter, and Councilmember Ansaldo-Sanchez.
2. On 10/09 she attended the AMBAG Board of Directors meeting.
3. On 10/10 she attended a meeting with Senator John Laird, City Manager Hunter, and Councilmember Cabrera.
4. On 10/11 she attended a townhall meeting with the California LGBTQ Caucus as part of the Salinas Valley Rural townhall. She thanked the Epi Center for voicing concerns related to housing and healthcare.
5. On 10/14 she attended the MST Board of Director meeting.
6. On 10/16 she met with the State Water Resource Control Board.
7. From 10/16 through 10/18 she attended the League of California Cities workshop.
8. On 10/23 she attended the Leadership Council Coalition of Service Providers.
9. On 10/23 she attended the MST Board of Conduct Subcommittee meeting.
10. She thanked the Alliance on Ageing and the Soledad Recreation Team for coordinating the Solution Summit to develop the Aging and Disabilities Action Plan.
11. On 10/28 the Soledad Committee of Lidres Campesinas will be having a Domestic Violance vigil at Cesar Chavez Park at 6:00

COUNCILMEMBERS' REPORTS AND ACKNOWLEDGEMENTS

Councilmember Cabrera had five items to report:
1. On 10/10 he attended the Legislative Committee along with Councilmember Ansaldo-Sanchez and Community Engagement Manager Jesus Valenzuela.
2. On 10/10 he attended a meeting with Senator John Laird, Mayor Velazquez, and City Manager Hunter.
3. From 10/15 through 10/18 he attended the League of California Cities Annual Conference.
4. On 10/23 he attended the TAMC meeting.
5. The Soledad Historical Society will be having an event on Saturday starting at 1:00.

Mayor Pro Tem Corralejo had 5 items to report:
1. She attended the Department of Rehabilitation Resource Fair.
2. She attended the Soledad High School Girls Falg Football game.
3. She had a meeting with City Manager Hunter regarding concerns of daycare, affordable housing, and Animal Services, and local business support.
4. She invited the council and the Community to Spookfest.
5. She encouraged everyone to vote.

Councilmember Banuelos had 10 items to report:
1. On 10/08 she met with the Monterey County Veterans Committee and KION regarding the upcoming Veterans parade of November 11th.
2. On 10/09 she attended the Monterey County Veterans Committee.
3. On 10/10 she attended the Soledad Cemetery meeting.
4. On 10/11 she attended a fundraiser with the Soledad Fireworks Committee.
5. From 10/15 through 10/18 she attended the League of California Cities Annual Conference.
6. On 10/21 she attended the Christmas Parade Committee meeting.
7. On 10/26 there will be a Zombie Run in Soledad.
8. She encouraged the Community to attend Spookfest.
9. Liberty Chapel will be having Harvest Night at the Soledad Community Center.
10. She also encouraged everyone to the Dia De Los Muertos event at the Soledad Community Center.

CITY MANAGER'S REPORT

1. 10/24 is Information Technology Director Steven Andranigian' s last day with the City.
2. Diago Herrera is the new Information Technology Technician. There is a consultant helping as well.
3. The City of Soledad will have a Haunted House at the Community Center for teens.
4. Spookfest and Harvest Fest, the Domestic Violance event and Dia De Los Muertos are all upcoming.
5. The City is postponing the Vine and Dine event.
6. There is a tentative ribbon cutting date of 11/16 for the new murals.
7. There will be a Veterans day event on 11/11.
8. City Manager Hunter and Financial Analyst Jesus Yanez are in discussion with different entities to move forward with a Facilitator to assist in developing a Strategic Plan.

FUTURE AGENDA ITEMS

Councilmember Banuelos did not have any future agenda request.

Mayor Pro Tem Corralejo had 1 future agenda item request:
1. She asked to have an update regarding the Youth Violance Prevention programs in Soledad.

Councilmember Cabrera did not have any future agenda items request.

Mayor Velazquez had 2 future agenda item requests:
1. She would like to know how Diversity, Equity and Inclusion is being implemented at the City.
2. She would like to have a presentation regarding possible development of a Public Safety Master Plan.

ADJOURNMENT

Meeting adjourned at 8:37 p.m.

Minutes Approved: November 6, 2024

_____

ANNA M. VELAZQUEZ, Mayor/Chair

_____

MEGAN HUNTER, City Manager

AGENDA ITEM NO. 2.

COUNCIL COMMUNICATION

SUBJECT: **Warrants**

TO: **Mayor Velazquez and City Council**

FROM: **Mike Howard, Finance Director**

THROUGH: **Megan Hunter, City Manager**

MEETING DATE: **November 6, 2024**

VENDOR SET: 01 City of Soledad
BANK: * ALL BANKS
DATE RANGE: 0/00/0000 THRU 99/99/9999

VENDOR I.D.	NAME	STATUS	CHECK DATE	INVOICE AMOUNT	DISCOUNT	CHECK NO	CHECK STATUS	CHECK AMOUNT
C-CHECK	VOID CHECK	V	10/18/2024			055762		
C-CHECK	VOID CHECK	V	10/18/2024			055763		
C-CHECK	VOID CHECK	V	10/18/2024			055772		
C-CHECK	VOID CHECK	V	10/18/2024			055773		
C-CHECK	VOID CHECK	V	10/18/2024			055776		
C-CHECK	VOID CHECK	V	10/18/2024			055777		
C-CHECK	VOID CHECK	V	10/18/2024			055782		
C-CHECK	VOID CHECK	V	10/18/2024			055839		
C-CHECK	VOID CHECK	V	10/28/2024			055843		
C-CHECK	VOID CHECK	V	10/28/2024			055881		
C-CHECK	VOID CHECK	V	10/28/2024			055906		
C-CHECK	VOID CHECK	V	10/28/2024			055907		
C-CHECK	VOID CHECK	V	11/01/2024			055921		
C-CHECK	VOID CHECK	V	11/01/2024			055922		

* * T O T A L S * *	NO			INVOICE AMOUNT	DISCOUNTS	CHECK AMOUNT
REGULAR CHECKS:	0			0.00	0.00	0.00
HAND CHECKS:	0			0.00	0.00	0.00
DRAFTS:	0			0.00	0.00	0.00
EFT:	0			0.00	0.00	0.00
NON CHECKS:	0			0.00	0.00	0.00
VOID CHECKS:	14	VOID DEBITS	0.00			
		VOID CREDITS	0.00	0.00	0.00	

TOTAL ERRORS: 0

	NO	INVOICE AMOUNT	DISCOUNTS	CHECK AMOUNT
VENDOR SET: 01 BANK: * TOTALS:	14	0.00	0.00	0.00
BANK: * TOTALS:	14	0.00	0.00	0.00

VENDOR SET: 01 City of Soledad
BANK: APRAB Mechanics Bank
DATE RANGE: 0/00/0000 THRU 99/99/9999

VENDOR	I.D.	NAME	STATUS	CHECK DATE	INVOICE AMOUNT	DISCOUNT	CHECK NO	CHECK STATUS	CHECK AMOUNT
AFLAC		AFLAC HEADQUARTERS							
	I-AF2202410152243	AFLAC CONTRIBUTION	R	10/18/2024	901.33		055754		
	I-AFL202410152243	AFLAC CONTRIBUTION	R	10/18/2024	1,168.77		055754		2,070.10
CALIFS		CALIFORNIA STATE DISBURSEMENT							
	I-CH 202410152243	CHILD SUPPORT CONTRIBUTION	R	10/18/2024	1,061.07		055755		1,061.07
COMM F		COMMUNITY FOUNDATION FOR MONTE							
	I-CCD202410152243	CAPITAL CAMPAIGN DONATION	R	10/18/2024	120.00		055756		120.00
PRINCI		PRINCIPAL LIFE INSURANCE COMPA							
	I-110202410152243	DENTAL INSURANCE	R	10/18/2024	3,299.28		055757		
	I-120202410152243	VISION INSURANCE	R	10/18/2024	532.92		055757		3,832.20
SEIU L		SEIU LOCAL 521							
	I-SCO202410152243	EMPLOYEE CONTRIBUTION	R	10/18/2024	23.00		055758		
	I-SEI202410152243	EMPLOYEE CONTRIBUTION	R	10/18/2024	1,315.77		055758		1,338.77
SPOA		SOLEDAD POLICE OFFICERS ASSOCI							
	I-SPO202410152243	POLICE OFFICERS CONTRIBUTIONS	R	10/18/2024	780.00		055759		780.00
STAEDD		STATE OF CALIFORNIA E.D.D.							
	I-T2 202410152243	STATE TAX W/H	R	10/18/2024	11,385.13		055760		11,385.13
STPERS		STATE OF CALIFORNIA PERS							
	I-PCR202410152243	CHIEF & LIEUTENANT	R	10/18/2024	3,447.98		055761		
	I-PEC202410152243	City of Soledad Conf PEPRA	R	10/18/2024	295.10		055761		
	I-PEP202410152243	EMPLOYEE CONTRIBUTION	R	10/18/2024	9,351.81		055761		
	I-PER202410152243	City of Soledad Regular Empl	R	10/18/2024	9,796.25		055761		
	I-PES202410152243	City of Soledad Police	R	10/18/2024	6,119.55		055761		
	I-PKE202410152243	City of Soledad Conf. Employee	R	10/18/2024	330.78		055761		
	I-PME202410152243	City of Soledad Reg Managers	R	10/18/2024	527.49		055761		
	I-PMR202410152243	City of Soledad Managers	R	10/18/2024	764.87		055761		
	I-PPE202410152243	City of Soledad Police	R	10/18/2024	2,355.07		055761		
	I-PPR202410152243	City of Soledad Police	R	10/18/2024	2,622.99		055761		
	I-PPS202410152243	City of Soledad Police	R	10/18/2024	6,115.09		055761		
	I-PRE202410152243	EMPLOYEE CONTRIBUTION	R	10/18/2024	4,689.26		055761		
	I-PRR202410152243	City of Soledad Regular Empl	R	10/18/2024	7,279.05		055761		53,695.29
SUNLIF		SUN LIFE ASSURANCE COMPANY OF							
	I-SLI202410152243	LIFE, AD&D, LTD	R	10/18/2024	1,887.49		055764		
	I-SLS202410152243	SUPPLEMENTAL	R	10/18/2024	373.59		055764		2,261.08

VENDOR SET: 01 City of Soledad
BANK: APRAB Mechanics Bank
DATE RANGE: 0/00/0000 THRU 99/99/9999

VENDOR	I.D.	NAME	STATUS	CHECK DATE	INVOICE AMOUNT	DISCOUNT	CHECK NO	CHECK STATUS	CHECK AMOUNT
UNIWAY		UNITED WAY MONTEREY COUNTY							
	I-UN 202410152243	UNITED WAY CONTRIBUTIONS	R	10/18/2024	2.00		055765		2.00
VANTAG		MISSION SQUARE-303584							
	I-401202410152243	EMPLOYEE DEDUCTION	R	10/18/2024	243.42		055766		
	I-D15202410152243	DEFERRED-EMPLOYEE PORTION	R	10/18/2024	567.74		055766		
	I-D7%202410152243	Directors' 5% Ret. Contr.	R	10/18/2024	460.00		055766		
	I-DDD202410152243	DEFERRED-EMPLOYEE PORTION	R	10/18/2024	7,645.00		055766		
	I-DEF202410152243	DEFERRED-EMPLOYEE PORTION	R	10/18/2024	1,646.09		055766		10,562.25
ACCBUS		ACC BUSINESS							
	I-242544000	INTERNET SERVICES - CITY HALL	R	10/18/2024	2,462.22		055767		2,462.22
ACCBUS		ACC BUSINESS							
	I-242570484	INTERNET	R	10/18/2024	21.91		055768		21.91
ACCBUS		ACC BUSINESS							
	I-242619616	WWTP INTERNET SERVICE	R	10/18/2024	1,348.53		055769		1,348.53
AGUILA		ROLANDO AGUILAR							
	I-10/08/24	SENIOR LUNCH RAFFLE GIFTS/DECO	R	10/18/2024	21.79		055770		21.79
ALCANA		ALCANTAR ACE HARDWARE							
	C-2452	RETURNED LIGHT BULBS	R	10/18/2024	43.68CR		055771		
	I-2206	IRRIGATION PARTS	R	10/18/2024	5.66		055771		
	I-2307	LATEX GLOVES	R	10/18/2024	10.91		055771		
	I-2411	PARK SUPPLIES	R	10/18/2024	28.37		055771		
	I-2416	BARREL BOLT FOR DOOR REPAIRS	R	10/18/2024	12.10		055771		
	I-2433	CHAINSAW FOR TREE TRIMMING	R	10/18/2024	37.13		055771		
	I-2449	BLUE BUILDING CLEANING SUPPLIE	R	10/18/2024	58.94		055771		
	I-2450	BARREL BOLT FOR K-9 CAGE	R	10/18/2024	4.36		055771		
	I-2451	LIGHTBULBS FOR RESTROOMS	R	10/18/2024	43.68		055771		
	I-2453	RESTROOM LIGHTS	R	10/18/2024	34.94		055771		
	I-2457	SPRAY PAINT	R	10/18/2024	12.01		055771		
	I-2458	TIE WIRE FOR BALLOTS	R	10/18/2024	17.47		055771		
	I-2463	PAINT STRAINER	R	10/18/2024	5.45		055771		
	I-2474	WOOD SCREWS FOR BALLOT SIGNS	R	10/18/2024	8.29		055771		
	I-2477	ANT & ROACH KILLER	R	10/18/2024	14.85		055771		
	I-2487	KEY FOR TRAILER	R	10/18/2024	4.36		055771		
	I-2488	HOSE CLAMP FOR ELECTION SIGNS	R	10/18/2024	3.27		055771		
	I-2493	GARDEN HOSE	R	10/18/2024	39.08		055771		
	I-2495	ALL SEASON HOSE	R	10/18/2024	29.49		055771		
	I-2500	SUPPLIES FOR COVANTA	R	10/18/2024	106.56		055771		
	I-2518	CAPS & FASTENERS	R	10/18/2024	13.31		055771		
	I-2524	SANTANA PARK DEADBOLT	R	10/18/2024	52.42		055771		
	I-2545	IRRIGATION REPAIR	R	10/18/2024	38.86		055771		
	I-2562	SCREW DRIVERS/SCREWS/FASTENERS	R	10/18/2024	8.11		055771		
	I-2567	FACILITY FITNESS	R	10/18/2024	7.20		055771		

VENDOR SET: 01 City of Soledad
BANK: APRAB Mechanics Bank
DATE RANGE: 0/00/0000 THRU 99/99/9999

VENDOR	I.D.	NAME	STATUS	CHECK DATE	INVOICE AMOUNT	DISCOUNT	CHECK NO	CHECK STATUS	CHECK AMOUNT
	I-2569	JANITORIAL	R	10/18/2024	17.47		055771		
	I-2613	TREE SAIL REPAIR	R	10/18/2024	61.14		055771		
	I-2620	TABLE FASTENERS	R	10/18/2024	14.31		055771		
	I-2621	ANT KILLER	R	10/18/2024	4.37		055771		
	I-2624	PICNIC TABLE FASTENERS	R	10/18/2024	14.31		055771		
	I-2632	9 VOLT BATTERY IRRIGATION TIME	R	10/18/2024	13.10		055771		
	I-2633	JANITORIAL SUPPLIES	R	10/18/2024	83.25		055771		
	I-2655	STAKES FOR TRUNK O TREAT	R	10/18/2024	123.07		055771		
	I-2699	CHAIN COIL	R	10/18/2024	20.06		055771		904.22
ALL ST		VARGAS AND RAMIREZ SPORTS							
	I-4525	FALL SOCCER JERSEYS	R	10/18/2024	1,854.93		055774		
	I-4528	SOCCER JERSEY ADD-ONS	R	10/18/2024	71.65		055774		
	I-4592	VOLLEYBALL	R	10/18/2024	1,968.64		055774		3,895.22
AMAZON		AMAZON CAPITAL SERVICES							
	C-1K4W-LNTP-31M6	REFUND FOR CISCO APS FOR CH	R	10/18/2024	1,183.71CR		055775		
	C-1K6L-XLNN-MLQ7	DIPLOMA FRAME RETURN	R	10/18/2024	61.33CR		055775		
	C-1X9J-DCXK-N46G	RAIN JACKET RETURN	R	10/18/2024	185.18CR		055775		
	I-111V-NWL1-1N9V	RAIN SUITS	R	10/18/2024	109.14		055775		
	I-11XH-VPPP-DT1X	UV STATION	R	10/18/2024	242.74		055775		
	I-13MD-4V9R-FJTL	G.P. WORKSHOP SUPPLIES	R	10/18/2024	18.68		055775		
	I-13TX-QPXM-FQVR	NEW CORPYARD NETWORK	R	10/18/2024	609.43		055775		
	I-141G-KCVW-PNKN	LOCKERS	R	10/18/2024	256.96		055775		
	I-14GT-MCTQ-MNCC	FLOOD TRAILER	R	10/18/2024	45.86		055775		
	I-14Q4-KMXD-J9YK	FACILITY	R	10/18/2024	32.72		055775		
	I-19LQ-VJLV-KXH3	COMMUNITY POLICING SUPPLIES	R	10/18/2024	230.45		055775		
	I-19N9-N4XK-MDY4	STEPSTOOL FOR SENIORS	R	10/18/2024	81.90		055775		
	I-1C3F-33HV-H6HR	RAIN GEAR	R	10/18/2024	80.50		055775		
	I-1CJK-3TG6-HD69	RAIN GEAR COLLECTION	R	10/18/2024	271.68		055775		
	I-1CRM-TL1N-64TW	TENCIA KEYBOARD	R	10/18/2024	65.54		055775		
	I-1FFT-YCM3-L94C	WAITING AREA CHARGING STATION	R	10/18/2024	81.77		055775		
	I-1FTH-6JVK-9YKD	NEW WIRELESS APS FOR CITY HALL	R	10/18/2024	886.56		055775		
	I-1GK4-C3DT-LVNF	HVAC FILTERS	R	10/18/2024	116.08		055775		
	I-1H1F-CTP4-CKRY	WINCH MOTOR FOR CRANE TRUCK	R	10/18/2024	294.41		055775		
	I-1JHY-KXGD-4RH1	SAFETY VEST	R	10/18/2024	20.74		055775		
	I-1JP1-9LT7-LYVN	FILTERS FOR CAT LOADER	R	10/18/2024	128.70		055775		
	I-1KGH-T6PP-G37H	COMMUNITY POLICING	R	10/18/2024	350.60		055775		
	I-1KP9-MD67-VTDX	COMMUNITY POLICING SUPPLIES	R	10/18/2024	542.95		055775		
	I-1KRH-3QH3-1MQV	SAFETY VEST FOR COLLECTIONS DE	R	10/18/2024	50.24		055775		
	I-1L1K-FRNC-CL9L	COMMUNITY POLICING	R	10/18/2024	102.64		055775		
	I-1LKG-NRP6-HYHW	CONTROLS FOR CRANE SERVICE TRU	R	10/18/2024	125.64		055775		
	I-1NQR-K9T3-NHLH	COLLECTION EQUIPMENT	R	10/18/2024	254.04		055775		
	I-1NVG-CWWX-K3TK	TRIGGER FOR POWER EQUIPMENT	R	10/18/2024	13.60		055775		
	I-1PPJ-X1QY-XLPH	COMCATE PROJECT FOR PD	R	10/18/2024	607.28		055775		
	I-1PYN-DP3V-XGCV	COMMUNITY POLICING SUPPLIES	R	10/18/2024	326.60		055775		
	I-1RDY-XN3W-JJNM	NEW CELLPHONE CASE FOR PW	R	10/18/2024	46.62		055775		
	I-1TPP-V7D3-NKJY	PARK/OFFICE SUPPLIES	R	10/18/2024	64.43		055775		

VENDOR SET: 01 City of Soledad
BANK: APRAB Mechanics Bank
DATE RANGE: 0/00/0000 THRU 99/99/9999

VENDOR	I.D.	NAME	STATUS	CHECK DATE	INVOICE AMOUNT	DISCOUNT	CHECK NO	CHECK STATUS	CHECK AMOUNT
	I-1XF7-64GW-KFH4	STORAGE UPGRADES FOR PD	R	10/18/2024	721.02		055775		
	I-1XR1-NXD3-JCYM	LAUNDRY DETERGENT FOR UNIFORMS	R	10/18/2024	104.19		055775		
	I-1YFH-LTTN-WTRP	RAIN JACKET FOR COLLECTIONS	R	10/18/2024	191.18		055775		5,644.67
AMESUP		AMERICAN SUPPLY COMPANY							
	I-3042057	RESTROOM SUPPLIES	R	10/18/2024	338.13		055778		
	I-3043838	JANITORIAL SUPPLIES RESTOCK	R	10/18/2024	259.08		055778		597.21
ANIMAL		ANIMAL DAMAGE MANAGEMENT, INC.							
	I-360806	RODENT CONTROL	R	10/18/2024	200.00		055779		200.00
AUSTIN		AUSTIN LUCERO PLUMBING & BACKF							
	I-10/15/24	ENCROACHMENT PERMIT DEPOSIT	R	10/18/2024	1,133.00		055780		1,133.00
AUTOZO		AUTOZONE LLC							
	C-05509779295	WHEEL WEIGHTS RETURN	R	10/18/2024	227.07CR		055781		
	C-5509772301	RETURN BLOWER SWITCH	R	10/18/2024	16.30CR		055781		
	C-5509775602	BLOWER MOTOR RETURN	R	10/18/2024	4.88CR		055781		
	I-05509778821	AIRHOSE	R	10/18/2024	59.89		055781		
	I-05509778974	TRANSMISSION MAINTENANCE	R	10/18/2024	227.28		055781		
	I-05509779272	TRANSMISSION VALVE	R	10/18/2024	90.39		055781		
	I-05509779293	WHEEL WEIGHTS	R	10/18/2024	85.00		055781		
	I-05509779374	STABILIZER BAR	R	10/18/2024	71.75		055781		
	I-05509782227	BRAKE FLUID	R	10/18/2024	66.79		055781		
	I-05509782271	AIR PUMP	R	10/18/2024	8.47		055781		
	I-05509782753	BRAKE VACUUM HOSES	R	10/18/2024	52.47		055781		
	I-05509782868	BRAKE PADS	R	10/18/2024	39.14		055781		
	I-05509783306	CALIPER BOLT PIN	R	10/18/2024	10.86		055781		
	I-05509786030	BRAKE FLUID	R	10/18/2024	33.40		055781		
	I-05509786031	BRAKE FLUID	R	10/18/2024	33.40		055781		
	I-05509786032	BRAKE FLUID	R	10/18/2024	33.40		055781		
	I-05509786033	BRAKE FLUIDS	R	10/18/2024	33.40		055781		
	I-05509786242	WIPER BLADES FOR VEHICLES	R	10/18/2024	130.50		055781		
	I-5509763449	VEHICLE SUPPLIES	R	10/18/2024	80.13		055781		
	I-5509771915	WHEEL WEIGHTS	R	10/18/2024	227.07		055781		
	I-5509775601	BLOWER MOTOR	R	10/18/2024	34.79		055781		
	I-5509775803	AIR HOSE FOR LIFT	R	10/18/2024	56.33		055781		1,126.21
BRAVIL		FRANCISCO BRAVO							
	I-09182426376	BRAKE CLIP SET & DRILL	R	10/18/2024	210.36		055783		210.36
BRIDGE		BRIDGET RAMIREZ							
	I-10/16/24	VOLLEYBALL COACH LIVESCAN REFU	R	10/18/2024	35.00		055784		35.00

VENDOR SET: 01 City of Soledad
BANK: APRAB Mechanics Bank
DATE RANGE: 0/00/0000 THRU 99/99/9999

VENDOR	I.D.	NAME	STATUS	CHECK DATE	INVOICE AMOUNT	DISCOUNT	CHECK NO	CHECK STATUS	CHECK AMOUNT
CAJUST		STATE OF CALIFORNIA JUSTICE DE							
	I-767964	LIVESCAN	R	10/18/2024	445.00		055785		445.00
CAROLL		CAROLLO ENGINEERS, INC.							
	I-FB56909-10	RECYCLED WATER CONVEYANCE	R	10/18/2024	169,541.25		055786		169,541.25
CENSIG		JULIO GIL							
	I-6945	DECALS FOR RADAR TRAILERS	R	10/18/2024	579.48		055787		579.48
CHARTE		CHARTER COMMUNINCATIONS							
	I-0035973092424	CORP YARD INTERNET	R	10/18/2024	135.00		055788		135.00
CIT		FIRST-CITIZENS BANK & TRUST CO							
	I-45704068	COPIER LEASE	R	10/18/2024	134.95		055789		
	I-45721081	C.H. COPIER	R	10/18/2024	327.71		055789		462.66
CROSSR		CROSSROADS SOFTWARE INC							
	I-1294	CITATION SYSTEM	R	10/18/2024	37,400.00		055790		37,400.00
DATA		DATAFLOW BUSINESS SYSTEMS, INC							
	I-402765	COMMUNITY CENTER COPIER	R	10/18/2024	85.40		055791		
	I-403131	C.H. COPIER	R	10/18/2024	438.82		055791		524.22
EDGES		EDGES ELECTRICAL GROUP, LLC							
	I-S6265260.001	REPAIRS - PH METER	R	10/18/2024	166.55		055792		
	I-S6266930.001	REPAIRS - HEADWORKS	R	10/18/2024	448.02		055792		614.57
EDIS		EMPLOYER DRIVEN INSURANCE SERV							
	I-353168-1	NOVEMBER PREMIUMS	R	10/18/2024	1,974.00		055793		1,974.00
EVERBA		EVERBANK, N.A.							
	I-10148730	C.H. COPIER	R	10/18/2024	176.48		055794		176.48
GUERR		DAMIAN GUERRERO							
	I-159	RIVER CLEAN UP	R	10/18/2024	100.00		055795		
	I-160	RIVER CLEAN UP	R	10/18/2024	100.00		055795		
	I-161	WEST ST CLEAN UP	R	10/18/2024	2,500.00		055795		
	I-162	RIVER CLEAN UP	R	10/18/2024	100.00		055795		
	I-163	RIVER CLEAN UP	R	10/18/2024	100.00		055795		
	I-164	RIVER TRASH	R	10/18/2024	100.00		055795		
	I-165	RANCHO SAN VINCENTE MAINT	R	10/18/2024	1,500.00		055795		
	I-166	SERRA LN BIOSWALE MAINT	R	10/18/2024	1,750.00		055795		
	I-167	DAVALOS BIOSWALE MAINT	R	10/18/2024	1,750.00		055795		
	I-168	BIOSWALE MAINTENANCE	R	10/18/2024	1,750.00		055795		
	I-169	ORCHARD PARK MAINT	R	10/18/2024	4,000.00		055795		13,750.00

VENDOR SET: 01 City of Soledad
BANK: APRAB Mechanics Bank
DATE RANGE: 0/00/0000 THRU 99/99/9999

VENDOR	I.D.	NAME	STATUS	CHECK DATE	INVOICE AMOUNT	DISCOUNT	CHECK NO	CHECK STATUS	CHECK AMOUNT
HILLYA		HILLYARD, INC.							
	I-605626745	JANITORIAL	R	10/18/2024	504.16		055796		504.16
HOFFMA		ERIN HOFFMAN							
	I-11/02/24	PACE PAINTER	R	10/18/2024	300.00		055797		300.00
HOLLOW		HOLLOWAY ENVIRONMENTAL SOLUTIO							
	I-3065	BIOSOLIDS & SLUDGE HAULING	R	10/18/2024	37,755.08		055798		37,755.08
ISA		ISA IN STUDIO ARCHITECTURE, IN							
	I-2024-2397	COMMUNITY CENTER REMODEL	R	10/18/2024	11,518.63		055799		
	I-2024-2398	FIRE STATION APPARATUS	R	10/18/2024	13,356.83		055799		24,875.46
JAV la		J.A.V. Language Solutions LLC							
	I-24-1437	INTERPRETOR SERVICES	R	10/18/2024	441.38		055800		441.38
JBHEAT		BENJAMIN LARA CHAVEZ							
	I-OOO91	HVAC REPAIRS AT FIRE DEPT	R	10/18/2024	3,580.00		055801		3,580.00
JERRYZ		JERRY ZAVALA							
	I-10/18/24	REIMBURSEMENT FOR LIVESCAN	R	10/18/2024	45.00		055802		45.00
KATHY		KATHY RADILLO							
	I-10/16/24	VOLLEYBALL COACH LIVESCAN REFU	R	10/18/2024	35.00		055803		35.00
KOLELE		KOL ELECTRIC, INC.							
	I-0091	ELECTRICAL INSPECTION	R	10/18/2024	450.00		055804		450.00
LANDCO		LANDEROS CONCRETE							
	I-10/15/24	ENCROACHMENT PERMIT DEPOSIT RE	R	10/18/2024	1,133.00		055805		1,133.00
LAWPRO		LAWSON PRODUCTS							
	I-9311898854	HARD HATS	R	10/18/2024	354.82		055806		
	I-9311913426	RESTROOM URINALS	R	10/18/2024	193.63		055806		548.45
LEGALN		LEGAL NOTIFICATION SERVICES, I							
	I-1471	SUBPOENA MAINTENANCE	R	10/18/2024	1,184.82		055807		1,184.82
LINDA		LINDA RODRIGUEZ SALINAS							
	I-10/08/24	VOLLEYBALL COACH LIVESCAN REFU	R	10/18/2024	35.00		055808		35.00
MEDCLE		SANDRA LOPEZ MEDINA							
	I-0690	MONTHLY JANITORIAL	R	10/18/2024	1,937.50		055809		
	I-0692	JANITORIAL	R	10/18/2024	2,257.50		055809		
	I-0694	MONTHLY JANITORIAL	R	10/18/2024	800.00		055809		
	I-0699	UNIT CLEANING	R	10/18/2024	520.00		055809		
	I-0701	CARPET CLEANING	R	10/18/2024	420.00		055809		
	I-10/16/24	REIMBURSEMENT FOR CLEANING SUP	R	10/18/2024	37.65		055809		5,972.65

VENDOR SET: 01 City of Soledad
BANK: APRAB Mechanics Bank
DATE RANGE: 0/00/0000 THRU 99/99/9999

VENDOR	I.D.	NAME	STATUS	CHECK DATE	INVOICE AMOUNT	DISCOUNT	CHECK NO	CHECK STATUS	CHECK AMOUNT
MOLINA		JAMES MOLINARI							
	I-67	RIVER MAINTENANCE	R	10/18/2024	2,700.00		055810		2,700.00
MONTPE		MONTEREY PENINSULA ENGINEERING							
	I-07-20	CONSTRUCTION FRONT ST MAINT	R	10/18/2024	150,609.20		055811		
	I-08-21	CONSTRUCTION - FRONT ST MAINT	R	10/18/2024	515,167.90		055811		665,777.10
MPEXPR		MP EXPRESS, INC.							
	I-75763	BUSINESS CARDS	R	10/18/2024	145.08		055812		
	I-75770	BADGE GRAPHICS	R	10/18/2024	101.60		055812		246.68
MY JEE		SALINAS LINCOLN MERCURY, INC							
	C-CM258886	STEERING RACK	R	10/18/2024	81.94CR		055813		
	I-258886	STEERING RACK	R	10/18/2024	3,101.61		055813		3,019.67
OREAUT		O'REILLY AUTO PARTS							
	C-3566-215569	CORE RETURN	R	10/18/2024	21.85CR		055814		
	I-3566-211151	BRAKE LUBRICANT	R	10/18/2024	24.57		055814		
	I-3566-211206	OIL FILTER/MOTOR OIL	R	10/18/2024	93.66		055814		
	I-3566-214828	BRAKE CALIPERS	R	10/18/2024	62.58		055814		
	I-3566-215437	REPAIRS FOR COLLECTION TRUCK	R	10/18/2024	289.02		055814		
	I-3566-215534	AIR FILTERS FOR SHOP	R	10/18/2024	135.62		055814		
	I-3566-215538	AIR FILTERS FOR SHOP	R	10/18/2024	193.32		055814		
	I-3566-215551	SWAY LINK	R	10/18/2024	80.39		055814		
	I-3566-215565	VALVE TOOL FOR SHOP	R	10/18/2024	62.22		055814		
	I-3566-215695	A/C LINE REPAIRS	R	10/18/2024	111.50		055814		
	I-3566-216603	WIPER FLUID	R	10/18/2024	21.57		055814		
	I-3566-216629	WIPER FLUID RESTOCK	R	10/18/2024	30.35		055814		
	I-3566-216630	SEAL KIT	R	10/18/2024	14.49		055814		
	I-4731-475797	STEERING GEAR	R	10/18/2024	292.31		055814		1,389.75
P.G.E.		PACIFIC GAS & ELECTRIC							
	I-0008341005-0	FIRE APPARATUS BAY	R	10/18/2024	3,000.00		055815		3,000.00
PACIAG		PACIFIC AG. RENTALS							
	I-1072286-0002	TRACTOR & RIPPER RENTAL	R	10/18/2024	20,812.13		055816		20,812.13
PENINS		PENINSULA WELDING & MEDICAL SU							
	I-267804	CYLINDER TANKS RENTAL	R	10/18/2024	119.10		055817		119.10
PLACEW		PLACEWORKS, INC.							
	I-83555	PRO-HOUSING DESIGNATION	R	10/18/2024	385.00		055818		
	I-83790	HOUSING ELEMENT	R	10/18/2024	145.94		055818		
	I-83882	GENERAL PLAN UPDATE	R	10/18/2024	20,274.80		055818		20,805.74

VENDOR SET: 01 City of Soledad
BANK: APRAB Mechanics Bank
DATE RANGE: 0/00/0000 THRU 99/99/9999

VENDOR	I.D.	NAME	STATUS	CHECK DATE	INVOICE AMOUNT	DISCOUNT	CHECK NO	CHECK STATUS	CHECK AMOUNT
POTTS		JESSICA POTTS							
	I-10/07/24	NRPA NATIONAL CONFERENCE	R	10/18/2024	160.50		055819		160.50
QUICOM		QUINN COMPANY							
	I-PC020299518	HYDRAULIC OIL FILTERS	R	10/18/2024	111.87		055820		111.87
REYTIR		JESUS REYES							
	I-012716	FLAT REPAIR	R	10/18/2024	492.19		055821		
	I-014112	ALIGNMENT & TIRE DISPOSAL	R	10/18/2024	1,034.96		055821		
	I-014113	WHEEL ALIGNMENT	R	10/18/2024	115.00		055821		1,642.15
SALINA		S & L INVESTMENTS							
	I-0228929	BREAST CANCER AWARENESS	R	10/18/2024	600.08		055822		600.08
SALSOL		SALINAS VALLEY SOLID WASTE AUT							
	I-5106	SERVICE FEE	R	10/18/2024	20,200.00		055823		
	I-6900	SOLID WASTE FEES SEPT 2024	R	10/18/2024	51,075.66		055823		71,275.66
SIGIRR		SIGNATURE IRRIGATION							
	I-54676	UV STATION VALVE	R	10/18/2024	51.19		055824		51.19
SOLAUT		SOLEDAD AUTO PARTS							
	I-187405	CLEANER FOR SHOP	R	10/18/2024	169.77		055825		169.77
SOLTRU		SOLEDAD TRUE VALUE							
	I-33159	CLOTHS HOOK	R	10/18/2024	9.23		055826		
	I-338340	NAILS	R	10/18/2024	2.17		055826		
	I-338342	BRASS CAP	R	10/18/2024	3.05		055826		
	I-338723	KEYS	R	10/18/2024	7.19		055826		
	I-338764	METAL BRACES	R	10/18/2024	16.33		055826		
	I-338767	CORNER BRACE	R	10/18/2024	13.09		055826		
	I-338814	HARDWARE SUPPLIES	R	10/18/2024	12.76		055826		
	I-338848	HARDWARE SUPPLIES	R	10/18/2024	20.74		055826		
	I-339261	SOLVENT	R	10/18/2024	21.84		055826		
	I-339319	PARK SUPPLIES	R	10/18/2024	34.88		055826		
	I-339523	AIR HOSE	R	10/18/2024	28.92		055826		
	I-339705	CLEANING MATERIALS	R	10/18/2024	16.91		055826		
	I-339707	SAND DISKS	R	10/18/2024	6.00		055826		
	I-339833	SUPER GLUE	R	10/18/2024	3.05		055826		
	I-340011	CONNECTING LINK	R	10/18/2024	3.59		055826		199.75
SPCAMO		SPCA OF MONTEREY COUNTY							
	I-09-24	SPCA MONTHLY FEES	R	10/18/2024	8,045.00		055827		8,045.00

VENDOR SET: 01 City of Soledad
BANK: APRAB Mechanics Bank
DATE RANGE: 0/00/0000 THRU 99/99/9999

VENDOR	I.D.	NAME	STATUS	CHECK DATE	INVOICE AMOUNT	DISCOUNT	CHECK NO	CHECK STATUS	CHECK AMOUNT
STACEY		STACEY KLARCYK							
	I-10/09/24	VOLLEYBALL COACH LIVESCAN REIM	R	10/18/2024	33.89		055828		33.89
STAPLE		STAPLES BUSINESS CREDIT							
	I-6012628902	OFFICE SUPPLIES FOR COLLECTION	R	10/18/2024	155.72		055829		155.72
SUSAN		SUSAN D. MCCARTY LONG							
	I-1002	CDBG APPLICATION 2024	R	10/18/2024	1,537.50		055830		1,537.50
TACOS		VICTOR M LLAMAS							
	I-1	G.D. WORKSHOP FOOD	R	10/18/2024	320.00		055831		320.00
TERMIN		RENTOKIL NORTH AMERICA INC							
	I-450610538	PEST CONTROL	R	10/18/2024	57.00		055832		
	I-451765506	PEST CONTROL	R	10/18/2024	57.00		055832		114.00
TL ENG		TL ENGINEERING							
	I-1546	ON-CALL TRAFFIC ENGINEERING	R	10/18/2024	480.00		055833		480.00
TMOBIL		T-MOBILE USA, INC							
	I-09/21/24-1467	CELLPHONES	R	10/18/2024	158.27		055834		158.27
TMOBIL		T-MOBILE USA, INC							
	I-09/21/24-4795	PHONES FOR IT	R	10/18/2024	70.08		055835		70.08
TRAFFI		TRAFFIC SAFETY STORE							
	I-910830	TRAFFIC EQUIPMENT	R	10/18/2024	4,558.12		055836		4,558.12
TRICIT		TRI-CITIES DISPOSAL AND RECYCL							
	I-0001115780	CLEAN UP WEEK - GARBAGE FEES	R	10/18/2024	365.28		055837		
	I-0001115781	LEVEE WEEDING	R	10/18/2024	333.40		055837		698.68
VESTIS		VESTIS GROUP, INC							
	I-5110557062	PW UNIFORMS	R	10/18/2024	106.55		055838		
	I-5110557063	PW UNIFORMS	R	10/18/2024	130.97		055838		
	I-5110557067	WW UNIFORMS	R	10/18/2024	373.83		055838		
	I-5110557068	WATER UNIFORMS	R	10/18/2024	106.34		055838		
	I-5110561548	PW UNIFORMS	R	10/18/2024	106.55		055838		
	I-5110561549	PW UNIFORMS	R	10/18/2024	130.97		055838		
	I-5110561553	WW UNIFORMS	R	10/18/2024	373.83		055838		
	I-5110561554	WATER UNIFORMS	R	10/18/2024	105.60		055838		1,434.64
Z&M EN		Z&M ENTERPRISE, LLC							
	I-1085	UV STATION	R	10/18/2024	1,258.01		055840		
	I-1086	UV STATION	R	10/18/2024	1,334.10		055840		2,592.11

VENDOR SET: 01 City of Soledad
BANK: APRAB Mechanics Bank
DATE RANGE: 0/00/0000 THRU 99/99/9999

VENDOR	I.D.	NAME	STATUS	CHECK DATE	INVOICE AMOUNT	DISCOUNT	CHECK NO	CHECK STATUS	CHECK AMOUNT
ZOLLME		ZOLL MEDICAL CORP							
	I-4053747	AUTO PULSE REPAIR FD	R	10/18/2024	4,304.50		055841		4,304.50
ALCANA		ALCANTAR ACE HARDWARE							
	I-2020	WELL 6 PRIMER	R	10/28/2024	131.09		055842		
	I-2484	GARBAGE CAN WELL #6	R	10/28/2024	57.25		055842		
	I-2593	CEMENT BAGS	R	10/28/2024	43.65		055842		
	I-2623	PRIMER/HOT GLUE	R	10/28/2024	57.87		055842		
	I-2659	TRASH CAN/ PAIL	R	10/28/2024	70.96		055842		
	I-2687	SPARE KEYS FOR TOOL BOXES	R	10/28/2024	43.61		055842		
	I-2690	PLYWOOD FOR SPOOKFEST	R	10/28/2024	31.67		055842		
	I-2694	PROBING ROD	R	10/28/2024	21.84		055842		
	I-2709	SUPPLIES	R	10/28/2024	350.16		055842		
	I-2713	TOILET FLUSHER	R	10/28/2024	15.28		055842		
	I-2739	TUBING FLUSH TRUCK	R	10/28/2024	54.76		055842		
	I-2741	PRESSURE WASHER BOLTS	R	10/28/2024	2.60		055842		
	I-2779	PAINT SUPPLIES	R	10/28/2024	6.10		055842		
	I-2781	STAPLES	R	10/28/2024	8.29		055842		
	I-2791	PAINT & CLEANING SUPPLIES	R	10/28/2024	31.87		055842		
	I-2803	IRRIGATION PARTS	R	10/28/2024	5.22		055842		
	I-2807	D BATTERIES & LINE LOCATOR	R	10/28/2024	41.68		055842		
	I-2810	HACKSAW/BLADE	R	10/28/2024	21.83		055842		
	I-2811	FASTENERS	R	10/28/2024	2.01		055842		
	I-2819	EXTENSION CORD	R	10/28/2024	19.65		055842		
	I-2825	IRRIGATION REPAIR	R	10/28/2024	3.47		055842		1,020.86
AMAZON		AMAZON CAPITAL SERVICES							
	I-16YJ-14RR-1PXL	OFFICE SUPPLIES	R	10/28/2024	46.54		055844		
	I-17J4-1QWG-P6FT	EXTENSION CORD	R	10/28/2024	53.78		055844		
	I-1D6D-63G7-CXWR	OFFICE FD	R	10/28/2024	82.07		055844		
	I-1DJ3-TKV3-7QW3	LOCATER RECEIVER	R	10/28/2024	5,202.12		055844		
	I-1FD4-H11V-KJJX	HOIST REPLACEMENT	R	10/28/2024	891.91		055844		
	I-1HKK-19Q1-MG3Q	VOLLEYBALLS	R	10/28/2024	237.45		055844		
	I-1J6M-DJ9W-CRRM	CORPYARD NEW NETWORK	R	10/28/2024	262.18		055844		
	I-1M7V-NH3K-YVPT	MINI BASKETBALL HOOPS	R	10/28/2024	541.98		055844		
	I-1TKP-QNGX-FKHR	SAFETY CONES	R	10/28/2024	218.48		055844		
	I-1VHM-VNQ9-1KTN	TOOL BAG	R	10/28/2024	64.44		055844		
	I-1XRG-XW73-CVJT	RIGID LINE LOCATOR	R	10/28/2024	2,311.83		055844		
	I-1YGK-7HV6-CM16	WORKSTATION UPGRADES	R	10/28/2024	633.62		055844		10,546.40
AMESUP		AMERICAN SUPPLY COMPANY							
	I-3044560	CLEANING SUPPLIES	R	10/28/2024	28.19		055845		28.19

VENDOR SET: 01 City of Soledad
BANK: APRAB Mechanics Bank
DATE RANGE: 0/00/0000 THRU 99/99/9999

VENDOR	I.D.	NAME	STATUS	CHECK DATE	INVOICE AMOUNT	DISCOUNT	CHECK NO	CHECK STATUS	CHECK AMOUNT
AUTOZO		AUTOZONE LLC							
	I-05509783272	BRAKE PIN BOOT KIT	R	10/28/2024	49.51		055846		
	I-05509783303	TRANSMISSION MODULE	R	10/28/2024	830.39		055846		
	I-05509786533	HEADLIGHT BULBS	R	10/28/2024	105.48		055846		
	I-05509786628	BRAKE FLUID	R	10/28/2024	33.40		055846		
	I-05509786629	BRAKE FLUID	R	10/28/2024	33.40		055846		
	I-05509787276	TRANSMISSION FILTER & GASKET	R	10/28/2024	53.27		055846		
	I-05509787603	DETAILING SUPPLIES	R	10/28/2024	27.93		055846		
	I-05509787605	STEEL WOOL	R	10/28/2024	15.62		055846		
	I-05509787703	BRAKE FLUID	R	10/28/2024	66.79		055846		
	I-05509787704	BRAKE FLUID	R	10/28/2024	66.79		055846		
	I-05509787705	BRAKE FLUID	R	10/28/2024	66.79		055846		
	I-05509788354	SUSPENSION PARTS/COOLANT	R	10/28/2024	87.48		055846		1,436.85
BFSLAN		BFS LANDSCAPE ARCHITECTS							
	I-24038.01	TOLEDO BASIN OUTREACH	R	10/28/2024	317.00		055847		317.00
BLUEPE		BLUEPEARL CALIFORNIA, INC							
	I-170608	ER FOR STRAY DOG	R	10/28/2024	517.46		055848		
	I-171172	ER FOR STRAY CAT	R	10/28/2024	138.33		055848		655.79
BRENNT		BRENNTAG PACIFIC INC							
	I-467509	CHLORINE WELL #7	R	10/28/2024	1,163.58		055849		
	I-467510	CHLORINE WELL #9	R	10/28/2024	2,907.23		055849		
	I-467511	CHLORINE LA CUESTA	R	10/28/2024	1,596.38		055849		5,667.19
CASPRI		CASEY PRINTING							
	I-211517	NOTEPADS	R	10/28/2024	184.63		055850		184.63
CORE&M		CORE & MAIN LP							
	I-V715525	2" WATERLINE	R	10/28/2024	234.51		055851		234.51
CSG CO		CSG CONSULTANTS, INC.							
	I-58385	BLDG SERVICES	R	10/28/2024	10,396.50		055852		
	I-58572	CONSULTING SERVICES	R	10/28/2024	6,133.00		055852		
	I-58649	FIRE SERVICES	R	10/28/2024	1,995.00		055852		
	I-B241840	BLDG PLAN REVIEW	R	10/28/2024	1,418.27		055852		
	I-F241248	CONSULTING SERVCS-	R	10/28/2024	917.00		055852		20,859.77
DATA		DATAFLOW BUSINESS SYSTEMS, INC							
	I-404065	C.H. COPIER	R	10/28/2024	317.27		055853		317.27
DAVIDC		DAVID CONSTRUCTION & MANAGEMEN							
	I-2402603	COMMUNITY CENTER MODERNIZATION	R	10/28/2024	231,370.41		055854		231,370.41

VENDOR SET: 01 City of Soledad
BANK: APRAB Mechanics Bank
DATE RANGE: 0/00/0000 THRU 99/99/9999

VENDOR	I.D.	NAME	STATUS	CHECK DATE	INVOICE AMOUNT	DISCOUNT	CHECK NO	CHECK STATUS	CHECK AMOUNT
ELCAMI		EL CAMINO ELECTRIC, INC.							
	I-7118	TROUBLESHOOT CEILING LIGHTS	R	10/28/2024	180.00		055855		180.00
EMCPLA		EMC PLANNING GROUP INC.							
	I-16-001-85	MIRAMONTE STAFF SUPPORT	R	10/28/2024	3,766.37		055856		
	I-24-110-3	ALMOND ACRES PLANNING SVCS	R	10/28/2024	512.94		055856		4,279.31
FEDEXF		FEDEX FREIGHT							
	I-8105764063	MOTOR FREIGHT	R	10/28/2024	317.50		055857		317.50
FERENT		FERGUSON ENTERPRISES INC. 1423							
	I-1871897	LID & VALVE	R	10/28/2024	624.30		055858		
	I-1872788	METER WRENCH	R	10/28/2024	613.26		055858		1,237.56
GEOMEE		SOUTHERN MONTEREY COUNTY MEMOR							
	I-90144149	PRE EMP MEDICAL CHECK	R	10/28/2024	122.00		055859		122.00
GISPLU		ISMAEL GONZALEZ							
	I-5157	REPAIRED GAS LEAK	R	10/28/2024	1,320.00		055860		
	I-5192	LA PLAZA BAKERY STORMDRAIN	R	10/28/2024	575.00		055860		
	I-5200	FRONT ST WATER LINE PROJECT	R	10/28/2024	421.14		055860		2,316.14
GRAINE		GRAINGER							
	I-9279083183	INSULATED RAIN BOOTS	R	10/28/2024	276.41		055861		276.41
GREENR		GREEN RUBBER-KENNEDY AG							
	I-G-430591	SCREWPRESS PARTS/REPAIRS	R	10/28/2024	290.14		055862		
	I-G-430689	FLASHLIGHTS - COLLECTIONS DEPT	R	10/28/2024	387.53		055862		
	I-S-786065	SCREW PRESS #2 REPAIR	R	10/28/2024	478.16		055862		
	I-S-786066	SCREWPRESS #2 REPAIR	R	10/28/2024	478.16		055862		1,633.99
GROUPE		GROUND PENETRATING RADAR SYSTE							
	I-816514	VIDEO FOR SEWER MAIN	R	10/28/2024	7,100.00		055863		7,100.00
INTSOL		INTEC SOLUTIONS, INC.							
	I-33846	WELL #9 FILTER INSPECTION	R	10/28/2024	2,300.00		055864		2,300.00
JARFAY		JARVIS FAY LLP							
	I-19181	LEGAL GENERAL	R	10/28/2024	13,554.00		055865		
	I-19182	SOLEDAD MARKETPLACE	R	10/28/2024	371.00		055865		
	I-19425	LEGAL GENERAL	R	10/28/2024	13,572.00		055865		
	I-19426	MIRAMONTE SPECIFIC PLAN	R	10/28/2024	53.00		055865		27,550.00

VENDOR SET: 01 City of Soledad
BANK: APRAB Mechanics Bank
DATE RANGE: 0/00/0000 THRU 99/99/9999

VENDOR	I.D.	NAME	STATUS	CHECK DATE	INVOICE AMOUNT	DISCOUNT	CHECK NO	CHECK STATUS	CHECK AMOUNT
JAV la		J.A.V. Language Solutions LLC							
	I-24-1421	TRANSLATION SERVICES	R	10/28/2024	450.00		055866		450.00
JIMETI		JIMENEZ TIRE SERVICE, INC.							
	I-6509	REPAIR FRONT TIRE	R	10/28/2024	142.50		055867		
	I-6510	REPLACE NEW TIRES	R	10/28/2024	390.02		055867		532.52
KEITH		KEITH DAY COMPANY INC.							
	I-61665	DIRT REMOVAL	R	10/28/2024	1,268.75		055868		1,268.75
LAWPRO		LAWSON PRODUCTS							
	I-9311927479	GLOVES - RESTOCKING SHOP	R	10/28/2024	264.23		055869		
	I-9311927480	REPLACE DRILL BITS AT SHOP	R	10/28/2024	405.13		055869		
	I-9311927481	REPLACE DRILL BITS	R	10/28/2024	375.85		055869		
	I-9311931086	RESTOCKING DRILL BITS	R	10/28/2024	270.74		055869		1,315.95
MCMAST		MCMASTER-CARR SUPPLY COMPANY							
	I-35109032	BOLTS FOR HEADWORKS COMPACTOR	R	10/28/2024	363.91		055870		363.91
MEDCLE		SANDRA LOPEZ MEDINA							
	I-0691	TRAILER - JANITORIAL	R	10/28/2024	450.00		055871		
	I-0695	WWTP	R	10/28/2024	980.00		055871		
	I-0697	BLUE BUILDING JANITORIAL	R	10/28/2024	335.00		055871		1,765.00
MNS		MNS ENGINEERS, INC							
	I-87679	GRANT WRITING BRIC	R	10/28/2024	243.75		055872		243.75
MPEXPR		MP EXPRESS, INC.							
	I-75208	MURAL DOOR HANGERS	R	10/28/2024	299.50		055873		
	I-75507	GENERAL PLAN OUTREACH	R	10/28/2024	393.70		055873		693.20
MY JEE		SALINAS LINCOLN MERCURY, INC							
	I-162399	VALVE BODY	R	10/28/2024	877.24		055874		
	I-259311	SUSPENSION PARTS	R	10/28/2024	324.70		055874		1,201.94
NAMTAG		COLLER INDUSTRIES INCORPORATED							
	I-744057A	NAMETAGS	R	10/28/2024	25.66		055875		
	I-745790A	NAMETAGS	R	10/28/2024	24.15		055875		49.81
NEWSV		NEWSV MEDIA							
	I-124757	PUBLIC NOTICE CDBG	R	10/28/2024	575.81		055876		575.81
NORIEG		DARLENE NORIEGA							
	I-10/08/24	REIMBURSEMENT FOR FOOD SUPPLYS	R	10/28/2024	64.32		055877		64.32

VENDOR SET: 01 City of Soledad
BANK: APRAB Mechanics Bank
DATE RANGE: 0/00/0000 THRU 99/99/9999

VENDOR	I.D.	NAME	STATUS	CHECK DATE	INVOICE AMOUNT	DISCOUNT	CHECK NO	CHECK STATUS	CHECK AMOUNT
NUTRIE		NUTRIEN AG SOLUTIONS, INC.							
	I-55789956	BLUE MARKING PAINT	R	10/28/2024	259.33		055878		259.33
OREAUT		O'REILLY AUTO PARTS							
	I-3566-216594	REPLACING LUG NUTS	R	10/28/2024	238.38		055879		
	I-3566-217565	HERCULINER - TRAILER ROOF	R	10/28/2024	458.81		055879		
	I-3566-217663	LIGHT BULB	R	10/28/2024	52.71		055879		
	I-3566-217729	OIL WELL #7 GENERATOR MAINT	R	10/28/2024	229.40		055879		
	I-3566-217840	RELAY	R	10/28/2024	19.11		055879		
	I-3566-217948	OIL CHANGE	R	10/28/2024	262.48		055879		
	I-3566-217983	WIPER MOTOR	R	10/28/2024	78.24		055879		
	I-3566-218477	OIL CHANGE	R	10/28/2024	95.22		055879		1,434.35
P.G.E.		PACIFIC GAS & ELECTRIC							
	I-10/14/24-2339	WATER	R	10/28/2024	54,281.11		055880		
	I-10/14/24-2544	LIGHTS	R	10/28/2024	48.85		055880		
	I-10/14/24-3586	SIGNALS	R	10/28/2024	231.62		055880		
	I-10/14/24-3745	LIGHTS	R	10/28/2024	8.02		055880		
	I-10/14/24-6325	SIGNALS	R	10/28/2024	161.33		055880		
	I-10/14/24-7630	MIRAVALE 2 ST LIGHTS	R	10/28/2024	131.21		055880		
	I-10/14/24-8696	ORCHARD PARK	R	10/28/2024	1,490.36		055880		
	I-10/14/24-8796	LIGHTS	R	10/28/2024	9,788.53		055880		
	I-10/14/24-9688	GALLARDO PARK LIGHTS	R	10/28/2024	671.40		055880		
	I-10/15/24-3624	FIRE DEPT	R	10/28/2024	769.97		055880		
	I-10/15/24-6356	SIGNALS	R	10/28/2024	77.56		055880		
	I-10/15/24-8802	ELECTRICITY	R	10/28/2024	5,902.61		055880		
	I-10/16/24-3573	LIGHTS	R	10/28/2024	123.21		055880		
	I-10/16/24-3933	WATER	R	10/28/2024	116.31		055880		
	I-10/16/24-4347	255 SOLEDAD ST LIGHTS	R	10/28/2024	819.95		055880		
	I-10/16/24-4624	SIGNALS	R	10/28/2024	15.01		055880		74,637.05
PAPE M		PAPE MATERIAL HANDLING INC.							
	I-18024580	CRANE RENTAL	R	10/28/2024	195.00		055882		195.00
PENINS		PENINSULA WELDING & MEDICAL SU							
	I-268465	WELDING GAS/SUPPLIES	R	10/28/2024	237.17		055883		237.17
PURPOW		PITNEY BOWES BANK INC PURCHASE							
	I-10/11/24	POSTAGE	R	10/28/2024	1,517.25		055884		1,517.25
RDOEQU		R.D. OFFUTT COMPANY							
	I-P0375738	TRACTOR SEAT	R	10/28/2024	180.26		055885		180.26

VENDOR SET: 01 City of Soledad
BANK: APRAB Mechanics Bank
DATE RANGE: 0/00/0000 THRU 99/99/9999

VENDOR	I.D.	NAME	STATUS	CHECK DATE	INVOICE AMOUNT	DISCOUNT	CHECK NO	CHECK STATUS	CHECK AMOUNT
RGS		REGIONAL GOVERNMENT SERVICES A							
	I-17557	WRM RECRUITMENT	R	10/28/2024	562.00		055886		562.00
RH BOR		RH BORDEN AND COMPANY LLC							
	I-1755	SEWER WATCH PROGRAM	R	10/28/2024	15,000.00		055887		15,000.00
ROSEND		ROSENDO RODRIGUEZ							
	I-10/24/24	ENCROACHMENT DEPOSIT RELEASE	R	10/28/2024	1,133.00		055888		1,133.00
SALPUM		SALINAS PUMP COMPANY							
	I-0035750	CHECK PUMP & ADD HEAD	R	10/28/2024	2,318.20		055889		2,318.20
SALSOL		SALINAS VALLEY SOLID WASTE AUT							
	I-FY2024-25-Q1	ADMIN FEES JULY-SEPT	R	10/28/2024	4,832.36		055890		4,832.36
SIGIRR		SIGNATURE IRRIGATION							
	I-54713	HEADWORKS PH REPAIRS	R	10/28/2024	30.42		055891		
	I-54714	CHLORINE PUMP REPAIRS	R	10/28/2024	41.05		055891		
	I-54751	CHLORINE PUMP REPAIRS	R	10/28/2024	101.84		055891		173.31
SOLAUT		SOLEDAD AUTO PARTS							
	I-187400	SWITCH FOR TRAILER	R	10/28/2024	71.89		055892		
	I-187459	BOLTS	R	10/28/2024	91.51		055892		
	I-187466	SHACKELS	R	10/28/2024	150.04		055892		313.44
SOLISB		BRIAN SOLIS							
	I-10/22/24	STREET GANGS TRAINING PER DIEM	R	10/28/2024	215.00		055893		
	I-10/24/24	GANG INVSTIGATN ACDMY PER DIEM	R	10/28/2024	533.00		055893		748.00
SUNBEL		SUNBELT RENTALS, INC							
	I-159810803-0001	6" PUMP FOR OUTFLOW	R	10/28/2024	3,329.76		055894		3,329.76
SWRCB		SWRCB ACCOUNTING OFFICE							
	I-RW-1047232	RECYCLED WATER	R	10/28/2024	11,178.00		055895		11,178.00
SWRCBD		SWRCB							
	I-10/23/24	GRADE 2 WW OPERATOR RENEWAL	R	10/28/2024	203.00		055896		203.00
TERMIN		RENTOKIL NORTH AMERICA INC							
	I-452509269	PEST CONTROL	R	10/28/2024	60.00		055897		
	I-452522312	OLP PEST CONTROL	R	10/28/2024	60.00		055897		120.00
TMOBIL		T-MOBILE USA, INC							
	I-10/12/24-8446	CELL PHONES	R	10/28/2024	387.70		055898		387.70

VENDOR SET: 01 City of Soledad
BANK: APRAB Mechanics Bank
DATE RANGE: 0/00/0000 THRU 99/99/9999

VENDOR	I.D.	NAME	STATUS	CHECK DATE	INVOICE AMOUNT	DISCOUNT	CHECK NO	CHECK STATUS	CHECK AMOUNT
TMOBIL		T-MOBILE USA, INC							
	I-10/12/24-8480	CELL PHONES	R	10/28/2024	317.38		055899		317.38
TMOBIL		T-MOBILE USA, INC							
	I-10/12/24-8557	PHONES	R	10/28/2024	1,214.41		055900		1,214.41
TOPES		TOPE'S TREE SERVICE, INC.							
	I-33841	2024 TREE TRIMMING PROJECTS	R	10/28/2024	46,560.00		055901		46,560.00
TYLER		TYLER TECHNOLOGIES							
	I-025-481516	SYSTEM MIGRATION	R	10/28/2024	6,612.45		055902		
	I-025-482228	SYSTEM MIGRATION	R	10/28/2024	1,890.00		055902		8,502.45
UNITED		UNITED RENTALS (NORTH AMERICA)							
	I-239314806-001	DUMP TRUCK RENTAL UNITED	R	10/28/2024	3,741.35		055903		
	I-239712466-001	SKID LOADER OUTFALL A	R	10/28/2024	3,904.82		055903		7,646.17
USBANK		U.S. BANK							
	I-7482837	SA BOND ADMIN FEES	R	10/28/2024	4,100.00		055904		4,100.00
USBANP		U.S. BANK CORPORATE PAYMENT SY							
	I-10/07/24-1475	FRANCINE UY CC-	R	10/28/2024	1,925.64		055905		
	I-10/07/24-4549	TRAINING LODGING	R	10/28/2024	3,126.09		055905		
	I-10/07/24-4991	DON WILCOX CC	R	10/28/2024	960.78		055905		
	I-10/07/24-4998	JESSICA POTTS CC	R	10/28/2024	949.87		055905		
	I-10/07/24-5003	LUCKENBACH CC-	R	10/28/2024	241.51		055905		
	I-10/07/24-6944	HILDA RAMIREZ CC -	R	10/28/2024	302.75		055905		
	I-10/07/24-7602	MEGAN HUNTER CC	R	10/28/2024	5,928.26		055905		
	I-10/07/24-8326	KAO YANG CC -	R	10/28/2024	4,524.16		055905		
	I-10/07/24-8349	FIRE DEPT CC - FLAG HOLDER	R	10/28/2024	120.00		055905		18,079.06
UTILTE		UTILITY TELECOM GROUP, LLC							
	I-902390000000241016	CITY PHONES	R	10/28/2024	4,429.80		055908		4,429.80
VESTIS		VESTIS GROUP, INC							
	I-5110566025	PW UNIFORMS	R	10/28/2024	106.55		055909		
	I-5110566026	PW UNIFORMS	R	10/28/2024	130.97		055909		
	I-5110566030	WW UNIFORMS	R	10/28/2024	373.83		055909		
	I-5110566031	WATER UNIFORMS	R	10/28/2024	105.60		055909		716.95
WALLAC		WALLACE GROUP							
	I-63460	RECYCLED WATER PROJECT	R	10/28/2024	6,542.50		055910		
	I-63461	FRONT ST MAINT PROJ	R	10/28/2024	33,618.55		055910		40,161.05

VENDOR SET: 01 City of Soledad
BANK: APRAB Mechanics Bank
DATE RANGE: 0/00/0000 THRU 99/99/9999

VENDOR	I.D.	NAME	STATUS	CHECK DATE	INVOICE AMOUNT	DISCOUNT	CHECK NO	CHECK STATUS	CHECK AMOUNT
Z&M EN		Z&M ENTERPRISE, LLC							
	I-1077	WIPER CYLINDER KIT	R	10/28/2024	3,664.27		055911		3,664.27
AFLAC		AFLAC HEADQUARTERS							
	I-AF2202410282245	AFLAC CONTRIBUTION	R	11/01/2024	901.33		055913		
	I-AFL202410282245	AFLAC CONTRIBUTION	R	11/01/2024	1,168.77		055913		2,070.10
CALIFS		CALIFORNIA STATE DISBURSEMENT							
	I-CH 202410282245	CHILD SUPPORT CONTRIBUTION	R	11/01/2024	1,061.07		055914		1,061.07
COMM F		COMMUNITY FOUNDATION FOR MONTE							
	I-CCD202410282245	CAPITAL CAMPAIGN DONATION	R	11/01/2024	120.00		055915		120.00
PRINCI		PRINCIPAL LIFE INSURANCE COMPA							
	I-110202410282245	DENTAL INSURANCE	R	11/01/2024	3,299.28		055916		
	I-120202410282245	VISION INSURANCE	R	11/01/2024	532.92		055916		3,832.20
SEIU L		SEIU LOCAL 521							
	I-SCO202410282245	EMPLOYEE CONTRIBUTION	R	11/01/2024	23.00		055917		
	I-SEI202410282245	EMPLOYEE CONTRIBUTION	R	11/01/2024	1,323.27		055917		1,346.27
SPOA		SOLEDAD POLICE OFFICERS ASSOCI							
	I-SPO202410282245	POLICE OFFICERS CONTRIBUTIONS	R	11/01/2024	780.00		055918		780.00
STAEDD		STATE OF CALIFORNIA E.D.D.							
	I-T2 202410282245	STATE TAX W/H	R	11/01/2024	12,016.83		055919		
	I-T2 202410292246	STATE TAX W/H	R	11/01/2024	2,772.68		055919		14,789.51
STPERS		STATE OF CALIFORNIA PERS							
	I-PCR202410282245	CHIEF & LIEUTENANT	R	11/01/2024	3,447.99		055920		
	I-PEC202410282245	City of Soledad Conf PEPRA	R	11/01/2024	295.10		055920		
	I-PEP202410282245	EMPLOYEE CONTRIBUTION	R	11/01/2024	9,613.53		055920		
	I-PER202410282245	City of Soledad Regular Empl	R	11/01/2024	10,062.02		055920		
	I-PES202410282245	City of Soledad Police	R	11/01/2024	6,137.23		055920		
	I-PKE202410282245	City of Soledad Conf. Employee	R	11/01/2024	330.78		055920		
	I-PME202410282245	City of Soledad Reg Managers	R	11/01/2024	527.49		055920		
	I-PMR202410282245	City of Soledad Managers	R	11/01/2024	764.87		055920		
	I-PPE202410282245	City of Soledad Police	R	11/01/2024	2,355.08		055920		
	I-PPR202410282245	City of Soledad Police	R	11/01/2024	2,622.99		055920		
	I-PPS202410282245	City of Soledad Police	R	11/01/2024	6,132.76		055920		
	I-PRE202410282245	EMPLOYEE CONTRIBUTION	R	11/01/2024	4,702.64		055920		
	I-PRR202410282245	City of Soledad Regular Empl	R	11/01/2024	7,298.45		055920		54,290.93

VENDOR SET: 01 City of Soledad
BANK: APRAB Mechanics Bank
DATE RANGE: 0/00/0000 THRU 99/99/9999

VENDOR I.D.		NAME	STATUS	CHECK DATE	INVOICE AMOUNT	DISCOUNT	CHECK NO	CHECK STATUS	CHECK AMOUNT
SUNLIF		SUN LIFE ASSURANCE COMPANY OF							
	I-SLI202410282245	LIFE, AD&D, LTD	R	11/01/2024	1,887.49		055923		
	I-SLS202410282245	SUPPLEMENTAL	R	11/01/2024	373.59		055923		2,261.08
UNIWAY		UNITED WAY MONTEREY COUNTY							
	I-UN 202410282245	UNITED WAY CONTRIBUTIONS	R	11/01/2024	2.00		055924		2.00
VANTAG		MISSION SQUARE-303584							
	I-401202410282245	EMPLOYEE DEDUCTION	R	11/01/2024	243.42		055925		
	I-D15202410282245	DEFERRED-EMPLOYEE PORTION	R	11/01/2024	573.74		055925		
	I-D7%202410282245	Directors' 5% Ret. Contr.	R	11/01/2024	460.00		055925		
	I-DDD202410282245	DEFERRED-EMPLOYEE PORTION	R	11/01/2024	7,645.00		055925		
	I-DEF202410282245	DEFERRED-EMPLOYEE PORTION	R	11/01/2024	1,480.72		055925		10,402.88
1		JIMENEZ, ELEAZAR							
	I-000202409302239	US REFUND	R	10/29/2024	71.73		055926		71.73
1		GARCIA GONZALEZ, VER							
	I-000202409302240	US REFUND	R	10/29/2024	102.06		055927		102.06
1		LEWIS, YUSUF							
	I-000202409302241	US REFUND	R	10/29/2024	2,283.53		055928		2,283.53
1		PANTOJA MARTINE, SAL							
	I-000202410252244	US REFUND	R	10/29/2024	418.59		055929		418.59
HDLCOR		HDL COREN & CONE							
	I-SIN044367	PROPERTY TAX ADMIN OCT-DEC 24	R	10/29/2024	1,842.57		055930		1,842.57
KRYSTA		KRYSTAL CASTILLO							
	I-10/09/24	CLAIM FOR DAMAGES - DOG ATTACK	R	10/29/2024	1,155.37		055931		1,155.37
P.G.E.		PACIFIC GAS & ELECTRIC							
	I-1185069-4	Little League Park Project	H	1/28/2015	180.86		151600		180.86

* * T O T A L S * *	NO			INVOICE AMOUNT	DISCOUNTS	CHECK AMOUNT
REGULAR CHECKS:	163			1,903,211.89	0.00	1,903,211.89
HAND CHECKS:	1			180.86	0.00	180.86
DRAFTS:	0			0.00	0.00	0.00
EFT:	0			0.00	0.00	0.00
NON CHECKS:	0			0.00	0.00	0.00
VOID CHECKS:	0	VOID DEBITS	0.00			
		VOID CREDITS	0.00	0.00	0.00	

TOTAL ERRORS: 0

VENDOR SET: 01 City of Soledad
BANK: APRAB Mechanics Bank
DATE RANGE: 0/00/0000 THRU 99/99/9999

VENDOR I.D.	NAME	STATUS	CHECK DATE	INVOICE AMOUNT	DISCOUNT	CHECK NO	CHECK STATUS	CHECK AMOUNT

	NO	INVOICE AMOUNT	DISCOUNTS	CHECK AMOUNT
VENDOR SET: 01 BANK: APRAB TOTALS:	164	1,903,392.75	0.00	1,903,392.75
BANK: APRAB TOTALS:	164	1,903,392.75	0.00	1,903,392.75
REPORT TOTALS:	164	1,903,392.75	0.00	1,903,392.75

SELECTION CRITERIA

VENDOR SET: 01-City of Soledad
VENDOR: ALL
BANK CODES: All
FUNDS: All

CHECK SELECTION

CHECK RANGE: 055753 THRU 999999
DATE RANGE: 0/00/0000 THRU 99/99/9999
CHECK AMOUNT RANGE: 0.00 THRU 999,999,999.99
INCLUDE ALL VOIDS: YES

PRINT OPTIONS
SEQUENCE: CHECK NUMBER

PRINT TRANSACTIONS: YES
PRINT G/L: NO
UNPOSTED ONLY: NO
EXCLUDE UNPOSTED: NO
MANUAL ONLY: NO
STUB COMMENTS: YES
REPORT FOOTER: NO
CHECK STATUS: NO
PRINT STATUS: * - All

AGENDA ITEM NO. 3.

COUNCIL COMMUNICATION

SUBJECT: **Human Resources Activity Report**

TO: **Honorable Mayor Velazquez and City Council**

FROM: **Francine Uy, Human Resources Manager**

THROUGH: **Megan Hunter, City Manager**

MEETING DATE: **November 6, 2024**

Open Recruitments:
Associate/Senior Planner - Transferred to External Recruiter (RGS). Opened on 10/23/24. Closes on 11/13/24.
Homeless Services Coordinator - Opened on 9/17/24. Open until filled. Next review, week of 11/11/24.
Police Officer - Continuous.
Water Resources Manager - External Recruitment (RGS) Re-opened on 9/9/24. Open until filled.

Vacancy Status Update:
(1) Associate Planner/Senior Planner – Vacated 8/10/24
(1) Homeless Services Coordinator – Round one review completed on 10/25/24. Round two review week of 11/11/24.
(1) IT Manager (formally IT Director) - Coming Soon.
(1) Maintenance Worker – Interviews scheduled for the week of 11/4/24.
(5) Police Officer - Ongoing
(1) Water Reclamation Shift Supervisor – Vacated 11/26/22 following internal promotion to WR CPO. Pending incumbent's exam status. Vacancy currently backfilled with temporary staffing.
(1) Water Resources Manager – To backfill vacated City Engineer 5/13/23. Pending interview outcome.

Temporary Staffing:
(1) Water Reclamation Chief Plant Operator - Special assignment.
(1) Office Specialist (Building) - Peak workload with development and ADUs.
(1) Office Assistant (Police Department) - Peak workload in the Records Division.
(2) Maintenance Worker - (1) Parks Maintenance - Backfill for WC injury, (1) Water - Backfill for non-industrial injury.
(2) Utility Maintenance Mechanic - (1) - Backfill vacant WR Shift Supervisor, (1) - Backfill for non-industrial injury.

AGENDA ITEM NO. 4.

COUNCIL COMMUNICATION

SUBJECT: **Police Department Activity Report**

TO: **Honorable Mayor Velazquez and City Council**

FROM: **Damon C. Wasson, Chief of Police**

THROUGH: **Megan Hunter, City Manager**

MEETING DATE: **November 6, 2024**

SOLEDAD POLICE DEPARTMENT

Monthly Crime Date and Calls for Service 2024

Activity	Jan.	Feb.	March	April	May	June	July	Aug.	Sept.	Oct.	Nov.	Dec.	Yearly Totals
Murder/Attempted Murder	0	0	0	0	0	0	0	0	0	0			0
Sexual Assault	0	1	0	1	0	0	0	1	2	1			6
2023-Armed Robbery	0	0	0	0	1	0	0	0	0	0	0	0	1
Armed Robbery	0	0	0	0	0	0	1	0	0	0			1
2023-Strong Arm Robbery	1	0	0	0	1	0	0	0	0	2	0	0	4
Strong Arm Robbery	0	1	0	0	0	1	0	0	0	0			2
Aggravated Assault	3	1	4	2	6	0	3	3	2	2			26
Arson	0	0	0	0	0	0	0	0	0	0			0
Burglary	0	0	0	2	0	2	0	1	1	2			8
Larceny	0	0	0	0	0	0	0	0	0	0			0
Auto Theft	2	2	2	2	1	4	4	3	2	4			26
DUI Stops at checkpoint	0	0	0	0	0	0	0	0	1	0			1
Minor ABC/TOBACCO Violations	0	0	0	0	0	0	0	1	0	0			1
Youth Violence Related Incidents	3	3	1	0	7	3	7	8	10	5			47
Traffic Citations/Warnings Issued	115	113	110	61	82	161	79	91	106	80			998
Total Arrests	27	19	25	19	24	46	33	28	23	40			284
Dogs Impounded	0	4	0	8	6	7	2	22	12	13			74
Cats & Other Impounds	5	1	0	2	7	3	4	9	5	12			48
ACO Contacts	0	0	0	0	0	0	0	70	29	44			143
Animals transported to SPCA	4	4	0	4	3	3	2	11	5	5			41
Code Enforcement Contacts	172	178	143	134	210	118	164	32	8	28			1,187
Parking Enforcement Citations/Warnings	0	0	0	0	0	0	0	58	64	69			191
Vehicle Abatement Contacts	0	0	0	0	0	0	0	48	81	52			181
Commercial Enforcement Contacts	0	0	0	0	0	0	0	8	8	5			21
Community Policing	185	0	124	184	144	191	1,703	458	745	612			4,346
Victim Advocate Contacts	21	13	47	83	88	70	70	86	78	98			654
Domestic Violence	5	2	2	4	2	9	8	7	6	10			55
Total Calls for Service	1,479	1,299	1,075	1,057	1,372	1,557	1,375	1,360	1,185	1,431			13,190
TOTAL MONTHLY ACTIVITY	2,022	1,641	1,533	1,563	1,954	2,175	3,455	2,305	2,373	2,515			21,536

SOLEDAD POLICE DEPARTMENT
STAFFING LEVELS
Authorized Sworn (21) Non-Sworn (6)

Month	Administration	Sergeants	Patrol	FTO/Cadet	Non-Sworn	Sworn Vacancies	Total Authorized Staff
August	2	5	6	3	7	4	27
September	2	5	6	2	7	5	27
October	2	5	6	2	7	5	27
November							
December							
January							
February							
March							
April							
May							
June							

09/24/2024 to
10/27/2024

2024

Soledad Police Department

COMMUNITY ENGAGEMENT REPORT

Citizen Contacts: Officers have made approximately 450 outreach contacts during this reporting period.
Business Checks: Officers conducted 74 business outreach contacts.
Apartment/Residential contacts: Officers made 19 contacts with residents on well-being checks.
Schools: Officers conducted 9 walk-throughs and drive-bys 43 times as part of school zone enforcement throughout Traffic Enforcement Unit. Special attention continues around the school with the Traffic Unit.
City Parks: Continuous patrol and 15 walk-throughs, with park visitor contacts made. Officers had a high presence at Vosti Park when Sunday soccer games are going.
Youth Outreach: Numerous children were contacted by officers - advocate - CSO's who provided stickers and goodie bags.
Soledad Farmer's Market: Attended on 09/26, and 10/03 conducting outreach. The farmer's market is now closed for the winter and will re-open in spring of 2025.
Special Events: The department attended the Hero Event for children with disabilities at Orchard Lane Park. We also held our "Coffee with a Cop" at the police department, both events very well attended.
Facebook: 2712 Likes, 501 Comments, 202 Shares, 13,398 times photos viewed, 100,014 People Reached. We currently have 11,036 Followers, and this number increases monthly and is attributed to the hard work of the department's various units, as well as our outreach in person and on social media.
Churches: On-going visits of all churches throughout the city.
Volunteer/Reserve/Explorer Units/Misc: Reserve Officers donated 68 hours, Volunteer Unit donated 8 hours in this reporting period. Department members continue to assist with the upcoming city wine event in November, as well as the LEO Foundation "Cops Giving Tree" event in December. The department has also completed its Election Safety Operations for the upcoming election to provide a safe environment for all voters within the city.

Prepared by: Deputy Chief Fred J. Lombardi

Victim Assistance Advocate activity report- C. Zamudio

September 28rd, 2024- October 28, 2024

Referral Services: 15

On-scene crisis response: 03

Community Outreach: 07

Meetings: 09

Follow ups: 10

Social Media/ Website: 17

Victim Advocate Training: 02

Schools visited: 05

Other Details: 30

TOTAL: 98

Soledad Police Department

Department Activity Report

CSO: Ruiz	Jan.	Feb.	March	April	May	June	July	Aug.	Sept.	Oct.	Nov.	Dec.
Abandoned Vehicles												
72-Hour Tag: Public	0	0	0	0	0	0	18	10	32	24		
72-Hour Tag: Private	0	0	0	0	0	0	3	0	1	2		
Vehicles Towed	0	0	0	0	0	0	3	4	1	1		
Total AV Contacts	0	0	0	0	0	0	24	14	34	27		
Commercial Enforcement												
Commercial Enforcement Contacts	0	0	0	0	0	0	0	0	0	0		
Animal Control												
Dog Licenses Issued	0	0	0	0	0	0	4	0	0	0		
Cats In Custody	0	0	0	0	0	0	4	5	3	9		
Dogs In Custody	0	0	0	0	0	0	9	9	4	8		
Other Animals In Custody	0	0	0	0	0	0	0	0	0	0		
Animal Bites	0	0	0	0	0	0	3	2	3	0		
SPCA Transport	0	0	0	0	0	0	5	5	5	3		
Deceased Animals	0	0	0	0	0	0	2	2	0	7		
Citations	0	0	0	0	0	0	1	2	3	1		
Warning Citations	0	0	0	0	0	0	0	3	1	1		
Breeding License Applications	0	0	0	0	0	0	0	0	0	0		
Contacts regarding Breeding	0	0	0	0	0	0	0	0	0	0		
Total Animal Control Contacts	0	0	0	0	0	0	28	28	19	29		
Municipal Code Violations												
Complaints	0	0	0	0	0	0	3	2	0	0		
Warnings	0	0	0	0	0	0	6	0	0	0		
Citations	0	0	0	0	0	0	13	0	0	0		
Total Municipal Code Contacts	0	0	0	0	0	0	13	0	0	0		
Code Enforcement												
Complaints	0	0	0	0	0	0	0	0	0	0		
Warnings	0	0	0	0	0	0	0	0	2	0		
Citations	0	0	0	0	0	0	0	0	0	0		
Reports Taken	0	0	0	0	0	0	0	0	0	0		
Total Code Enforcement Contacts	0	0	0	0	0	0	0	0	0	0		
Community Policing												
Community Contacts/Events	0	0	0	0	0	0	1	0	1	1		
Calls for Service												
Other Calls for Service	0	0	0	0	0	0	90	50	75	103		

Soledad Police Department

Department Activity Report

CSO: Escarsega	Jan.	Feb.	March	April	May	June	July	Aug.	Sept.	Oct.	Nov.	Dec.
Abandoned Vehicles												
72-Hour Tag: Public	0	0	0	0	0	0	0	18	28	4		
72-Hour Tag: Private	0	0	0	0	0	0	0	3	8	10		
Vehicles Towed	0	0	0	0	0	0	0	3	1	0		
Total AV Contacts	0	0	0	0	0	0	0	24	37	14		
Commercial Enforcement												
Commercial Enforcement Contacts	0	0	0	0	0	0	0	0	0	0		
Animal Control												
Dog Licenses Issued	0	0	0	0	0	0	0	4	0	2		
Cats In Custody	0	0	0	0	0	0	0	4	2	0		
Dogs In Custody	0	0	0	0	0	0	0	9	5	2		
Other Animals In Custody	0	0	0	0	0	0	0	0	0	0		
Animal Bites	0	0	0	0	0	0	0	3	0	1		
SPCA Transport	0	0	0	0	0	0	0	5	0	1		
Deceased Animals	0	0	0	0	0	0	0	2	0	2		
Citations	0	0	0	0	0	0	0	1	0	1		
Warning Citations	0	0	0	0	0	0	0	0	0	0		
Breeding License Applications	0	0	0	0	0	0	0	0	0	0		
Contacts regarding Breeding	0	0	0	0	0	0	0	0	0	1		
Total Animal Control Contacts	0	0	0	0	0	0	0	28	7	10		
Municipal Code Violations												
Complaints	0	0	0	0	0	0	0	3	32	22		
Warnings	0	0	0	0	0	0	0	6	1	0		
Citations	0	0	0	0	0	0	0	13	19	0		
Total Municipal Code Contacts	0	0	0	0	0	0	0	22	52	22		
Code Enforcement												
Complaints	0	0	0	0	0	0	0	11	3	6		
Warnings	0	0	0	0	0	0	0	2	0	0		
Citations	0	0	0	0	0	0	0	11	0	3		
Reports Taken	0	0	0	0	0	0	0	3	1	0		
Total Code Enforcement Contacts	0	0	0	0	0	0	0	27	4	9		
Community Policing												
Community Contacts/Events	0	0	0	0	0	0	0	1	1	1		
Calls for Service												
Other Calls for Service	0	0	0	0	0	0	0	90	59	21		

Soledad Police Department

Department Activity Report CELAYA

CSO: Celaya	Jan.	Feb.	March	April	May	June	July	Aug.	Sept.	Oct.	Nov.	Dec.
Abandoned Vehicles												
72-Hour Tag: Public	0	0	0	0	0	0	0	6	6	7		
72-Hour Tag: Private	0	0	0	0	0	0	0	2	2	4		
Vehicles Towed	0	0	0	0	0	0	0	2	2	0		
Total AV Contacts	0	0	0	0	0	0	0	10	10	11		
Commercial Enforcement												
Commercial Enforcement Contacts	0	0	0	0	0	0	0	8	8	5		
Animal Control												
Dog Licenses Issued	0	0	0	0	0	0	0	0	0	0		
Cats In Custody	0	0	0	0	0	0	0	0	0	0		
Dogs In Custody	0	0	0	0	0	0	0	4	3	3		
Other Animals In Custody	0	0	0	0	0	0	0	0	0	0		
Animal Bites	0	0	0	0	0	0	0	0	0	0		
SPCA Transport	0	0	0	0	0	0	0	1	0	0		
Deceased Animals	0	0	0	0	0	0	0	0	0	2		
Citations	0	0	0	0	0	0	0	0	0	0		
Warning Citations	0	0	0	0	0	0	0	0	0	0		
Breeding License Applications	0	0	0	0	0	0	0	0	0	0		
Contacts regarding Breeding	0	0	0	0	0	0	0	0	0	0		
Total Animal Control Contacts	0	0	0	0	0	0	0	13	3	5		
Municipal Code Violations												
Complaints	0	0	0	0	0	0	0	0	7	9		
Warnings	0	0	0	0	0	0	0	0	0	5		
Citations	0	0	0	0	0	0	0	0	15	0		
Total Municipal Code Contacts	0	0	0	0	0	0	0	0	22	14		
Code Enforcement												
Complaints	0	0	0	0	0	0	0	11	2	10		
Warnings	0	0	0	0	0	0	0	2	0	4		
Citations	0	0	0	0	0	0	0	11	0	0		
Reports Taken	0	0	0	0	0	0	0	3	2	5		
Total Code Enforcement Contacts	0	0	0	0	0	0	0	27	4	19		
Community Policing												
Community Contacts/Events	0	0	0	0	0	0	0	0	1	0		
Calls for Service												
Other Calls for Service	0	0	0	0	0	0	0	21	13	22		

AGENDA ITEM NO. 5.

COUNCIL COMMUNICATION

SUBJECT: **Public Works Activity Report**

TO: **Honorable Mayor Anna Velazquez and City Council**

FROM: **Alex Ramos, Assistant Engineer**

THROUGH: **Megan Hunter, City Manager**

MEETING DATE: **November 6, 2024**

PUBLIC WORKS DEPARTMENT ACTIVITY REPORT

MEETING
DATE: November 6, 2024

Projects and Activities

- **Public Works Boss Day Appreciation Lunch**
  - The WRF hosted this year's Boss's Day on October 16, in which we had a delicious BBQ lunch. A huge thank you to all the staff that attended and the PW Works Managers and Public Works Director for all the great work they do and exemplary leadership!

- **Front Street Maintenance Project**
  - This project continues to make progress with the recent completion of the colored concrete and sidewalk underdrains. MPE is currently in the process of gearing up to perform the Change Order (if approved) for the 4" conduits across Front Street to provide power for the vacant lots and installing various truncated domes along the corridor.

- **Veteran's Park Recycled Water Project**
  - This project has been completed with the final walkthrough to occur before bringing this to council for formal approval, acceptance, and retention release.

- **Community Center Modernization Project**
  - The Community Center Kitchen is near completion with the newly applied Epoxy Floors. The contractor has recently completed the installation of the basketball goal winches, the gym door installation, and is currently working on the lighting.

- **Projects out for Bids (PlanetBids) Updates:**
  - **Upcoming Projects:**
    - Maintenance of the two one-million gallon La Cuesta Water Reservoirs to be put out to bid soon, in which Public Works shall coordinate the necessary work to service the water tanks for maintenance/routine cleaning and possibly painting the inside of the tank(s).
      - Anticipated Bid Date: Late October
      - Anticipated Close Date: Mid-November.

Water Department Activities

- **Completion of Lead Inventory**

- Public Works completed work on the city-wide lead inventory required by the state of every existing water service line in the city accounting for approximately 4300 separate service lines.

- **Annual Stormwater Report**
  - Public Works staff completed work on the City's annual Municipal Separate Storm Sewer Systems (MS4) stormwater report for submittal to the state water board this month. The city of Soledad operates under the state's MS4 permit and is required to submit a yearly report to show compliance with the permit's requirements as the city has and will continue to comply with these requirements.

- **Water Meter Grant Approval**
  - PW staff applied for and received a 1.4-million-dollar grant from the US Bureau of Reclamation. The grant is meant to improve water efficiency through the repair and replacement of approximately 1900 old and damaged water meters throughout Soledad.

- **Regional Recharge Basin Clean Up**
  - PW staff with assistance from Keith Day cleared up dirt, weed and brush from the Soledad regional storm water catch basin located north of the railroad property. The accumulated debris was from unincorporated county stormwater flows into the City's storm drain system at the top of San Vicente Road.

- **Water Valve Replacement**
  - PW staff with assistance from Grade Break repaired and installed various valve clusters on the south side of town. This will enable Water staff to perform isolated shutdowns for system maintenance instead of large area shutdowns, and also improve fire flows.

<u>Water Reclamation Facility Activities:</u>

- **WRF Preparation**
  - PW staff continued weed abatement and vermin control in preparation for levee work by US Army Corps of Engineers, projected to begin October 28, 2024.

- **WRF Levee Project**
  - The Army Core of Engineers hosted their Pre-Con Meeting at the WRF Conference room with PW Staff and the Contractor (Sea Construction). The contractor has officially broke ground with initial earthwork commencing on the 29th!

- **WRF Repairs**
  - PW Staff with assistance from Grade Break engineering assisted with repairs on a blown out 2-inch PVC pipe at the WRF that shut down station operation for about a day and a half.
  - PW Staff performed the follow list of repairs on equipment:
    - CAT Loader & attachments hydraulic flushing complete, along with replacement of fuel tank.
    - Replaced pivoting anchor bolt for Clarifier 1 skimmer through.

- **WRF Testing**
  - PW Conducted a couple of real-life sample application polymer test runs on screw-press. Will be establishing a new account with NorthStar to have access to a secondary source of chemical procurement in the event it is ever needed.

Wallace Group

Printed on Mon Oct 28, 2024 at 10:51 am PDT

Job #: 1001-0004-00 Soledad - Front Street Maintenance Project
Front St.
Soleda, California 93960

Unclassified

Description

Taken Date
10/25/2024 at 12:51 pm

Upload Date
10/25/2024 at 12:51 pm

Uploaded By
Tony Scalise

File Name
0B543EC4-FC3D-4A3B-A...

Unclassified

Description

Taken Date
10/25/2024 at 12:20 pm

Upload Date
10/25/2024 at 12:21 pm

Uploaded By
Tony Scalise

File Name
0CFEAED6-02FD-4AC6-9...

Wallace Group

Printed on Mon Oct 28, 2024 at 10:52 am PDT

Job #: 1001-0003 Soledad - Veterans Park Recycled Water Project
445 Ortiz St
Soledad, California 93960

Construction

Description

Taken Date
10/23/2024 at 08:56 am

Upload Date
10/23/2024 at 08:56 am

Uploaded By
Tony Scalise

File Name
FF3FF218-BB7E-4CBA-8...

Construction

Description

Taken Date
09/27/2024 at 01:55 pm

Upload Date
09/27/2024 at 01:57 pm

Uploaded By
Tony Scalise

File Name
B5596074-6BBB-493E-8...

Wallace Group

Printed on Mon Oct 28, 2024 at 10:52 am PDT

Job #: 1001-0003 Soledad - Veterans Park Recycled Water Project
445 Ortiz St
Soledad, California 93960

Construction

Description

Taken Date
09/16/2024 at 08:56 am

Upload Date
09/16/2024 at 09:05 am

Uploaded By
Tony Scalise

File Name
9BA6AEBB-7A1A-4BC1-B...

Gym Door Installation

Gym Door Installation

Epoxy Floor

Winches Install

Stage Electrical

PW Staff repairing blown out 2-inch PVC pipe at WRF

PW staff replacing a pivoting anchor bolt on Clarifier 1 skimmer at WRF

Soledad Recharge Basin Outfall Cleaning

https://www.facebook.com/reel/1074206314044648

AGENDA ITEM NO. 6.

COUNCIL COMMUNICATION

SUBJECT: **Fire Department Activity Report**

TO: **Honorable Mayor Velazquez and City Council**

FROM: **Jason Luckenbach, Fire Department**

THROUGH: **Megan Hunter, City Manager**

MEETING DATE: **November 6, 2024**

Fire Department - October Activity Report

City of Soledad Fire Department

525 Monterey Street, Soledad, CA 93960

STAFF REPORT

October 30th, 2024

To: Mayor and City Council

From: Jason Luckenbach, Battalion Chief

Subject: **Activity Report – October 2024**

BUSINESS INSPECTIONS / PRE-PLANS:

- (16) Business Inspections have been completed
- (6) Re-Inspections completed
- (2) Fire Department Pre-Plans completed

HYDRANT TESTING:

- (5) Hydrants Tested in the month of September.

SUSPECTED OPIOID INCIDENTS:

***No suspected Opioid Incidents ran by the Fire Department in October

EVENTS:

- 10/5/2024 - Fire Station Crew attended the Super Hero event at Orchard Lane Park.

EVENTS:

- 10/28/2024 – San Vicente Pre-School had a Fire Station Tour
- 10/29/2024 – Fire Station Crew attended the Resource Fair at Pinnacles High School

Station 37 - Call Volume

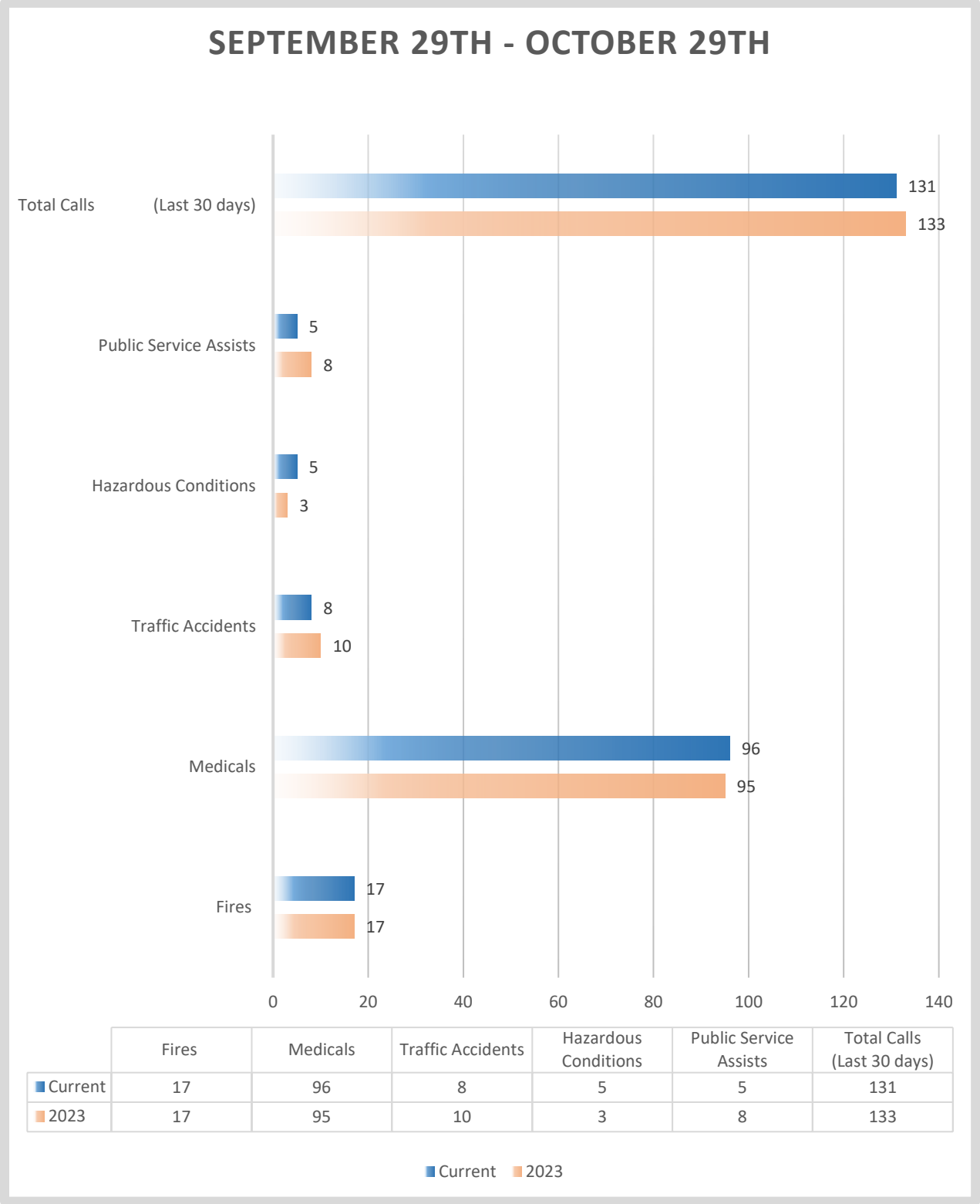

	Fires	Medicals	Traffic Accidents	Hazardous Conditions	Public Service Assists	Total Calls (Last 30 days)
Current	17	96	8	5	5	131
2023	17	95	10	3	8	133

AGENDA ITEM NO. 7.

COUNCIL COMMUNICATION

SUBJECT: **Community and Economic Development Department Activity Report**

TO: **Honorable Mayor Velazquez and City Council**

FROM: **Kao Nou Yang, Community and Economic Development Director**

THROUGH: **Megan Hunter, City Manager**

MEETING DATE: **November 6, 2024**

ECONOMIC DEVELOPMENT DIVISION UPDATES:

CDBG BUSINESS ASSISTANCE LOAN PROGRAM

As of now, $452,500 remains available in the CDBG Business Assistance Program. Staff has engaged with several potential applicants and is currently awaiting the submission of an application for a business expansion project.

In August 2024, the CDBG Notice of Funding Availability (NOFA) was issued to the public. Since then, staff has been diligently preparing the applications for this funding, which are due to the State on October 29th, 2024.

BUSINESS ENGAGEMENT

Staff continue their outreach efforts with local businesses and recently gave a presentation to the new Soledad Chamber of Commerce on October 17th. During the presentation, staff reviewed available resources for local businesses and provided assistance by answering questions related to business support programs.

ART MURAL PROJECT – CESAR CHAVEZ PARK

The mural installation at Cesar Chavez Park is progressing rapidly, with the artist making swift progress. One of the three murals, located on the public restroom containers, has been completed. The remaining two murals are nearing completion, with all artworks scheduled to be finished by late October or early November. Staff is enthusiastic about the project, as the vibrant murals have already garnered significant attention from visitors.

SOLEDAD CONTAINER VILLAGE PROJECT

As previously mentioned, the City of Soledad received a $50,000 grant from the USDA

Rural Development Program to conduct a feasibility study and develop an economic impact report for the Soledad Container Village Project. On October 15th, staff held a kickoff meeting with Kosmont Companies to discuss the study's scope and details. The study is expected to be completed within the next 6 to 9 months.

HOUSING DIVISION UPDATES:

ENCAMPMENT RESOLUTION FUND (ERF)

The County of Monterey has received the Standard Agreement from the state. The City of Soledad has started the interviewing process for an FTE Homeless Outreach Coordinator. The City of Soledad identified the vendor for the modular units for the interim shelter. The County of Monterey has projected to execute the second subrecipient agreement by the end of November, 2024.

HOMEBUYER PROGRAM

The Community and Economic Development Department has been preparing to respond to the CDBG NOFA. One of the activities for the request of funds is a new Homebuyer Program. On October 2, 2024 the City Council approved the Homebuyer Program Guidelines.

SUSD HOUSING PROJECT

The City of Soledad and the Soledad Unified School District expect to complete the property purchase before the end of October 2024. On October 23, 2024 the city council reviewed and approved the Affordable Housing Agreement.

LAS VIVIENDAS AFFORDABLE UNITS

Las Viviendas has sold about 80% of the total project units/. In the month of October, the City approved the purchase of 4 affordable units.

PLANNING DIVISION UPDATES:

SOLEDAD GENERAL PLAN

The has hired Place Works Inc. to assist in creating and updating the 2045 General plan for Soledad. Currently, the staff is working on the Land Use Alternatives. City staff hosted an interactive community out reach event for the Alternatives to gather more input and ideas on the community's focus and needs. The event was very well attended with at least 40 participants. We are gathering this feedback information and reworking the alternative. Once it has been finalized the information will be presented to the General Plan Steering committee, Planning Commission then Final approval from City Council. For more information about the General Plan on the website Seimpre Soledad - www.soledadgeneralplan2045.com , or you can get the material at City Hall.

SOLEDAD MARKETPLACE

Tractor Supply permit is officially ready to be issued. The applicant will need to come in

and pay for the permit and fees before issuance.

DaVita is currently under construction and ready to be finaled within the next couple of weeks. They did inform the City that they are anticipating to be open to the public in February of 2025.

Quick Quack Carwash has officially submitted their application for a Car Wash CUP Amendment #2 and SPR- ARC review. The staff is currently reviewing the application and have it tentative schedule for Planning Commission in December.

PANDA EXPRESS

Currently under Construction and Inspections. Everything is progressing forward, they are anticipating opening in December 2024

HOLIDAY INN

The project applicant has submitted the Site Plan and Architectural Design plan for city staff to review. The application was incomplete, and comments/ deficiencies were sent back to the applicant for additional information and submission. The city has not received any communication since August.

SUHSD HOUSING PROJECT

Staff is continuing to work with SUSD to proceed with the construction process. The applicant has submitted Building Plans to the City for an At-risk Plan Review. Comments were sent back to the applicant. The Applicant knows that all Plan Checks are At-Risk Plan Checks from now until ownership. City staff is waiting for the Applicants to purchase the property to review and work on the Lot Merger application.

MIRAMONTE (Former Miravale III)

Staff continues to work on the Certification of Completion with LAFCO. City Manager Megan Hunter has been the lead in LAFCO meetings to address the ag conservation easement efforts. Staff will continue to fulfill LAFCO requirements. Staff has also been working with the developer on the Development Agreement with the direction of the City Manager. The Development Agreement is anticipated to be presented to City Council by the end of this year or early 2025.

BUILDING DEPARTMENT UPDATES:

Please see the attached building permit log.

Permit List

49 Records

Permit #	Issued	Any Parcel Number	Site Address	Type	Project Description	Valuation Totals
240398	09/25/2024	022461016000	430 Soberanes Street	SOLAR / PV SYSTEM	SOLAR/PV SYSTEM/15 MODULES, 6.075 KW	$25,542.00
240324	09/26/2024	022461043000	240 Amador Street (UNIT A)	ACCESSORY DWELLING UNIT	CONVERT EXIST GARAGE TO ADU 456 SQF ATTACHED	$46,274.88
240400	09/26/2024	22471078000	565 BURKE CIR	SOLAR / PV SYSTEM	SOLAR/PV SYSTEM/9 MODULES, 3.555 KW	$13,754.00
240401	09/27/2024	22401065000	340 GOLDENROD ST	RESIDENTIAL RE-ROOF	REMOVE EXISTING, REPLACE WITH 40 YR COMP SHINGLES	$14,000.00
240159	09/30/2024	22361075000	334 ENTRADA DR (UNIT A)	ACCESSORY DWELLING UNIT	GARAGE CONVERSION TO ADU ADDING EXISTING BEDROOM/TOTAL SQ. FT. 631	$64,033.88
240394	09/30/2024	022461092000	101 MARKET STREET	RESIDENTIAL WATER HEATER	REPLACEMENT WATER HEATER LIKE FOR LIKE	$1,300.00
240395	09/30/2024	22461092000	101 MARKET STREET	RESIDENTIAL WATER HEATER	REPLACEMENT WATER HEATER LIKE FOR LIKE	$1,300.00
240396	09/30/2024	022461092000	101 MARKET STREET	RESIDENTIAL WALL HEATER	COMPLETE REPLACEMENT OF WALL HEATER	$1,500.00
240402	09/30/2024	022511046000	1109 San Rafael	SOLAR / PV SYSTEM	SOLAR/PV SYSTEM/8 MODULES, 3.16 KW	$13,004.00
240403	10/01/2024	22016002000	263 FRONT ST	COMMERCIAL PLUMBING	INTSALL 2-WAY CLEANOUT FOR SEWER LINE	$17,680.00
240241	10/02/2024	22514007000	629 RUSCONI DR	ACCESSORY DWELLING UNIT	Converting existing garage into ADU 495 Sq. Ft.	$50,232.60
240404	10/02/2024	022026005000	521 Front Street	COMMERCIAL PLUMBING	INSTALLATION OF A BACKFLOW DEVICE	$4,000.00
240406	10/02/2024	22142020000	1160 WALKER DR	SOLAR PV WITH ELECTRICAL PANEL UPGRADE	8 MODULES/3.16 KW /225 AMP MAIN PANEL REPLACEMENT W/200 AMP MAIN BREAKER & 1 BATTERY	$17,004.00

Permit #	Issued	Any Parcel Number	Site Address	Type	Project Description	Valuation Totals
240407	10/02/2024	22514068000	646 ASILOMAR AVE	RESIDENTIAL ELECTRICAL	ELECTRICAL/TEMP POWER/METER RELEASE FOR 646 ASILOMAR	$2,000.00
240409	10/02/2024	022223035000	2092 Hector de la Rosa Sr. Street	COMMERCIAL PLUMBING	INSTALLATION OF BACKFLOW DEVICE	$2,500.00
240363	10/03/2024	022291024	600 NESTLES ROAD	COMMERCIAL FIRE SYSTEMS	Hood fire suppression	$3,500.00
240410	10/03/2024	22431061000	190 HEAD ST	SOLAR / PV SYSTEM	SOLAR/PV SYSTEM/13 MODULES, 5.265 KW /1 BATTERY STORAGE	$17,035.00
230328	10/04/2024	22361024000	298 VIEWPOINTE ST (UNIT A)	ACCESSORY DWELLING UNIT	NEW DETACHED ADU 749 SQ. FT.	$76,008.52
240371	10/04/2024	22171044000	1515 PALM AVE (UNIT A)	ACCESSORY DWELLING UNIT	Convert Existing Detached Garage into ADU 533 Sq. Ft.	$79,508.08
240414	10/07/2024	022461044000	246 Amador Street	SOLAR / PV SYSTEM	SOLAR/PV SYSTEM/10 MODULES, 4.05 KW /1 BATTERY	$14,695.00
240419	10/09/2024	022323020000	833 LA COLINA	ACCESSORY STRUCTURES	REPLACING 80 FT. OF SIDE YARD FENCE ON ALLEY WAY 6'X8"	$1,458.00
240412	10/10/2024	-30	110 (Com.Center) Market Street	RESIDENTIAL EVCS	Installation of 2 Level 2 EV Charging Stations	$10,000.00
240415	10/10/2024	22442095000	1041 SAN ANTONIO	SOLAR / PV SYSTEM	Install 9.6kW PV System with 24 modules + 27 kWH Energy Storage System	$42,114.49
240187	10/11/2024	22161032000	433 3RD ST (UNIT A)	ACCESSORY DWELLING UNIT	New Detached ADU Pre-Approved Plans 749 SQ. FT.	$133,715.33
240422	10/11/2024	22192034000	410 RUBION CIR	SOLAR / PV SYSTEM	SOLAR/PV SYSTEM/10 MODULES, 4.05 KW	$14,695.00
240424	10/14/2024	022332010000	604 VERANO ST	RESIDENTIAL RE-ROOF	REMOVE EXISTING, REPLACE WITH 30YR COMP SHINGLES	$7,500.00
240427	10/16/2024	22151018000	1245 WALKER DR	SOLAR / PV SYSTEM	SOLAR/PV SYSTEM/21 MODULES, 7.56 KW	$66,754.00

Permit #	Issued	Any Parcel Number	Site Address	Type	Project Description	Valuation Totals
240428	10/16/2024	22043010000	215 1ST ST	RESIDENTIAL RE-ROOF	REMOVE EXISTING, REPLACE WITH SHINGLES 30 YR	$5,000.00
240313	10/17/2024	22282038000	1769 SAUSALITO PL (UNIT A)	ACCESSORY DWELLING UNIT	Garage Conversion/ADU 440 SQ. FT.	$44,651.20
240425	10/17/2024	022026012000	160 Main Street	COMMERCIAL PLUMBING	Install new Backflow Preventer	$1,500.00
240429	10/17/2024	22132018000	550 MAIN ST	RESIDENTIAL PLUMBING	Unclog pipes & replace sewer later 25 feet inside propety line	$250.00
240430	10/17/2024	022232025000	407 AZTLAN CIR	SOLAR / PV SYSTEM	SOLAR/PV SYSTEM/8 MODULES, 3.16 KW, STORAGE BATTERY (1)	$13,004.00
240431	10/18/2024	22482073000	625 SAN LUIS REY	SOLAR / PV SYSTEM	SOLAR/PV SYSTEM/20 MODULES, 8.1 KW / 1 BATTERY STORAGE	$29,390.00
240372	10/21/2024	22062029000	247 7TH ST	ACCESSORY DWELLING UNIT	JADU Attached-Garage Conversion 336 Sq. Ft.	$34,097.28
240390	10/21/2024	22085006000	256 PINE ST	RESIDENTIAL ADDITION OR REMODEL	New Addition780 sq ft: 2 bedroom/1 bath/1 family room/1 mud room	$96,750.00
240432	10/21/2024	022211006000	120 Front Street	RESIDENTIAL RE-ROOF	REMOVE EXISTING, REPLACE WITH SHINGLES	$16,000.00
240433	10/21/2024	22361043000	338 SENTINEL ST	RESIDENTIAL RE-ROOF	REMOVE EXISTING, REPLACE WITH SHINGLES MAIN DWELLING	$3,000.00
240405	10/22/2024	022223019000	1305 Front Street	COMMERCIAL SIGN REPLACEMENT	To change "Shell" to "Chevron"	$57,063.00
240434	10/22/2024	22192042000	1618 MUNRAS ST	RESIDENTIAL RE-ROOF	REMOVE EXISTING, REPLACE WITH SHINGLES	$9,000.00
240436	10/23/2024	22302010000	1260 LA PAZ CT	RESIDENTIAL RE-ROOF	REMOVE EXISTING, REPLACE WITH COMP SHINGLES	$12,000.00
240437	10/24/2024	22381022000	1306 VISTA DE SOLEDAD	SOLAR / PV SYSTEM	SOLAR/PV SYSTEM/24 MODULES, 9.72 KW	$33,468.00

Permit #	Issued	Any Parcel Number	Site Address	Type	Project Description	Valuation Totals
240438	10/24/2024	22471034000	203 LEDESMA ST	SOLAR / PV SYSTEM	ROOF MOUNT SOLAR 8 MODULES, 3.24 KW	$6,156.00
240389	10/25/2024	022291024	600 NESTLES ROAD	COMMERCIAL FIRE SYSTEMS	PANDA EXPRESS INSTALL FIRE ALARM SYSTEM	$8,188.21
240439	10/25/2024	22442095000	1041 SAN ANTONIO	RESIDENTIAL EVCS	INSTALLATION OF EV CHARGER IN GARAGE	$300.00
240440	10/28/2024	22062008000	238 6TH ST	RESIDENTIAL RE-ROOF	REMOVE EXISTING, REPLACE WITH SHINGLES	$14,800.00
240441	10/28/2024	22232045000	505 TOLTECA CIR	RESIDENTIAL RE-ROOF	REMOVE EXISTING, REPLACE WITH COMP. SHINGLES	$15,000.00
240442	10/28/2024	22042018000	1248 MONTEREY ST	RESIDENTIAL RE-ROOF	REMOVE EXISTING, REPLACE WITH COMP SHINGLES	$8,000.00
240443	10/29/2024	22154025000	1225 PALM AVE	RESIDENTIAL WINDOW REPLACEMENT	WINDOW REPLACEMENT IN BEDROOM - 5 WINDOWS "LIKE FOR LIKE"	$2,000.00
240445	10/30/2024	022411040000	412 Indian Paintbrush	SOLAR / PV SYSTEM	SOLAR/PV SYSTEM/12 MODULES, 4.92 KW / 1 BATTERY STORAGE	$28,307.00

AGENDA ITEM NO. 8.

COUNCIL COMMUNICATION

SUBJECT: **Office of Community Engagement, Department Activity Report**

TO: **Honorable Mayor Anna Velazquez and City Council**

FROM: **Jesus Valenzuela, Community Engagement Manager**

THROUGH: **Megan Hunter, City Manager**

MEETING DATE: **November 6, 2024**

Social Media Report for October 3 – October 30, 2024

Facebook
- Reach: 13.3k – 2% increase
- Content Interactions: 273 – 36.7% decrease
- Page Visits: 3k – a 37.6% decrease
- New follows: 18 new follows
- Total followers: 4,805
    - Soledad – 40.4%
    - Women – 68.8%
    - Men – 31.2%
- Most successful post: Super Hero Festival

Instagram
- Reach: 17.5k – 97.7% increase
- Content Interactions: 740 – 32.4% increase
- Visits: 1k –17% decrease
- New Followers: 98
- Total followers: 1,800
    - Soledad –42.6%
    - Women – 64.4%
    - Men – 35.6%
- Most successful post: Veteran's Day story

Twitter
- Data for Twitter is currently unavailable

General Plan Workshop
The Office of Community Engagement and Community and Economic Development held a General Plan workshop. Almost 50 residents participated, and this workshop was a

key step in getting feedback on the General Plan.

S.O.A.R.
The Office of Community Engagement joined the Hartnell Foundation's S.O.A.R. Grant (see staff report) for more information. With this grant, the City of Soledad can onboard youth to map out assets in our community and further youth community engagement.

Furthermore, we met with Ivan Mora to lay the groundwork for the Youth Council and Youth Commissioners.

Legislative Committee
With Townsend's help, we held our first Legislative Committee meeting with Members Cabrera and Ansaldo-Sanchez. With this committee in place, we will be better prepared at the State level to engage our representatives.

Public Works
Community Engagement canvassed the neighborhoods affected by the water shutoffs to support public works. We passed our door tags to an entire block on the south end of town.

AGENDA ITEM NO. 9.

CITY OF SOLEDAD
STAFF REPORT

SUBJECT: **Accept by Minute Motion an Update and Closeout of the Emergency Declaration Regarding the City's Water System from the July 31, 2024, Soledad City Council meeting.**

TO: **Honorable Mayor Velazquez and City Council**

FROM: **Donald Wilcox, Public Works Director**

THROUGH: **Megan Hunter, City Manager**

MEETING DATE: **November 6, 2024**

Recommendation

Accept by Minute Motion an Update and Closeout of the Emergency Declaration Regarding the City's Water System from the July 31, 2024, Soledad City Council meeting.

Executive Summary

On Tuesday, July 30, 2024, Well No. 11, one of Soledad's highest-producing and the only submersible potable water well was found to be out of service, and the main components, the pump and motor, needed to be replaced. Time was of the essence due to this being our highest water usage season and another well was also down, so Soledad City Council held a Special Meeting on Wednesday July 31, 2024 and issued a declaration of an emergency to relieve the City of formal bidding requirements to enable expeditious repairs to Well No. 11, and authorized the City Manager to spend an amount not to exceed $120,000 for equipment and services to get Well No. 11 back in service. A new pump and motor totaling $88,470 were ordered on August 27, 2024. The motor has arrived, and the estimated arrival date for the pump is between November 19 and December 3, 2024, as pumps are custom made to fit the well. The current status is that we have Well No. 6 back in full service so we now have four of the five wells fully functional. We are past the peak water demand season and the new pump is scheduled for delivery soon. Staff therefore recommends that we now close out this emergency declaration as we do not foresee any significant additional expenditures or procurement exemptions needed to allow expedited purchases to restore service.

Background

On Tuesday, July 30, 2024, Well No. 11, Soledad's highest producing well, was found to be out of service. This happened while Well No. 10 was down for scheduled maintenance and Well No. 6 was down due to vibration. This created a situation where the water reservoirs could not be kept full as necessary for adequate water storage as needed in case of emergency. Soledad City Council held a special meeting on July 31, 2024 in order to declare an emergency so that repairs to Well No. 11 could

be performed without delay. Since that time, Well No. 10 was placed back in full service and Well No. 6 was placed back in limited service, which enables Operators to keep all four of the City's 1 MG reservoirs full of water. The old pump/motor from Well No. 11 was shipped to a company in Texas that can evaluate it towards being rebuilt to be used as a spare, but we have not yet received an estimated cost or schedule.

Review & Analysis

A new pump and motor totaling $88,470 were ordered for Well No. 11 on August 27, 2024. The new motor has arrived but the estimated arrival date for the pump is between November 19 and December 3, 2024, as pumps are custom made to fit the well depth, aquifer, motor, system pressure, etc., which takes time. Well No. 11 remains out of service, however our other four wells are keeping the reservoirs full, and we have reached the end of the peak water system demands. The old motor that was sent out for an estimate to rebuild came with an estimate close to the price of a new motor, and since the old motor was also proprietary, all parties recommend not proceeding with rebuilding the old motor. The current status is that we now have Well No. 6 back in full service so we now have four of the five wells fully functional, we are past the peak water demand season, and the new pump is scheduled for delivery soon. Therefore, staff recommends that we now close out this emergency declaration as we do not foresee any significant additional expenditures or procurement exemptions to allow expedited purchases.

Financial Considerations

On July 31, 2024, Soledad City Council authorized repairs to Well No. 11 as necessary and up to $120,000, to be funded by the Water Operations Fund #309 – Reserves. A new pump and motor totaling $88,470 were ordered on August 27, 2024, and the motor has arrived, but the new pump has not yet been received. Once the pump is received, the contractor (Maggiora Brothers) will install the new pump/motor and staff will disinfect, sample and bring Well No. 11 back into service and pay the contractor in full.

Alternatives

- Proceed as recommended
- Provide Staff with alternate direction.

Planning/CEQA

The proposed repair work does not require analysis under the California Environmental Quality Act (CEQA), based on 14 California Code of Regulations Section 15301, which provides that repair and maintenance of existing public facilities and mechanical equipment that does not entail expansion of a former use is exempt from CEQA.

Public Notice Requirements

None required.

AGENDA ITEM NO. 10.

CITY OF SOLEDAD
STAFF REPORT

SUBJECT: **Resolution No. 6168, A Resolution of the City Council of the City of Soledad Approving In-Kind Services, Park Use Fee Waiver, and Street Closure of Front Street between Main Street and Soledad Street for the 38th Annual Christmas and Festivities Event at Cesar Chavez Park**

TO: **Mayor Velazquez and City Council**

FROM: **Darlene Noriega, Deputy City Clerk**

THROUGH: **Megan Hunter, City Manager**

MEETING DATE: **November 6, 2024**

Recommendation

It is recommended that the City Council of the City of Soledad consider and approve Resolution No. 6168, "Approving In-Kind Services, Park Use Fee Waiver and Street Closure of Front Street Between Main Street and Soledad Street for the 38th Annual Christmas and Festivities Event at Cesar Chavez Park".

Executive Summary

For many years, the Soledad-Mission Chamber of Commerce has been submitting applications for the Christmas Parade and Festivities Event to the City of Soledad. This event marks the 38th annual celebration of Christmas and Festivities in Soledad, featuring a parade, non-profit food vendors, children's games, and entertainment. The event will occur on December 07, 2024 from 2:00 pm to 8:00 pm and will be held at Cesar Chavez Park. The Christmas Committee have requested that the park use fee be waived and in-kind services for Police, Fire, and Public Works be provided to ensure the event's success.

Background

For 37 years, the Soledad-Mission Chamber of Commerce (Chamber) has been organizing annual Christmas Parades and Festivities at Cesar Chavez Park, however, this year the festivities are being organized by the Christmas Committee and the City of Soledad. The event has traditionally included a street parade, children's activities with Santa Claus, and food sales from non-profit agencies. This year's event will follow the same format as in previous years.

Review & Analysis

The Chamber has been organizing a traditional event for the past 37 years, creating a safe and enjoyable environment for local families. However, this year the Christmas events are being organized by the

Christmas Committee and the City of Soledad. Due to the positive benefit for the community, the City has long been a partner and both the Soledad Police Department, and the Fire Department (Cal Fire) have participated in the parade. The event is scheduled for December 7, 2024 from 2:00 pm to 8:00 pm, with an additional hour allocated for set-up and clean-up.

The Christmas Committee has worked to ensure the event is well-organized, requiring minimal resources from the City. As such, the Christmas Committee requests in-kind services of the Soledad Police Department to lead the parade efforts and the Public Works Department to ensure that the streets are closed. Additionally, the Soledad Fire Department (Cal Fire) will be at the parade's end to showcase Santa Claus. The parade will begin at 5:00 pm at California Gourmet Pizza on West St. and proceed south on Front St. before ending at Kidder Street. The parade route is shown in **Attachment 1**, which is provided herein.

The event will be hosted at Cesar Chavez Park as previous years. To provide a safe pedestrian area, Staff requests approval to close Front Street, from Main Street to Soledad Street. This closure will help to accommodate the Christmas festivities activities like children's games, food vendors from non-profit agencies, and entertainment for the community. The street closure and traffic flow map is shown on **Attachment 2** provided herein.

Upon the Council approval, the services rendered by the Public Works, Police, and Fire Departments will be at no cost. To ensure the efficient operation of the event, all Soledad Police Department Staff will be responsible for guiding and providing traffic control for the parade. Additional staffing includes the Fire Department who will participate in the parade and two (2) staff members from Public Works who will help with barricade set-up and take down. It is also recommended that City Council waive the $150 park reservation fee for the use of Cesar Chavez Park consistent with the Council's desire to host family friendly event for the community.

Financial Considerations

If the waiver is approved, there will be a loss of rental revenue to the City in the amount of $150 in addition to City Staff resources spent to support the event. While there is a cost for the in-kind services of staff time - approximately $1,500 to $3,500, it is difficult to estimate the true costs. The reason is that some employees volunteer, some employees are salaried and exempt, and some employees work overtime. The City does its best to minimize overtime for these events, but it is important to note that when departments budget each year, these events are accounted for. Since this is an annual event, departments include overtime to cover these costs as part of the community engagement and outreach efforts.

Alternatives

- Approve the Resolution as recommended.
- Do not approve the Resolution. This alternative is not recommended, as this is a popular event provided by the Christmas Committee, and they would not be able to provide it to its current capacity without the park use and street closures.
- Provide other direction to staff.

Planning/CEQA

Not applicable.

Public Notice Requirements

None.

Attachment(s):
Resolution No. 6168
Attachment 1
Attachment 2

RESOLUTION NO. 6168

A RESOLUTION OF THE CITY COUNCIL OF THE CITY OF SOLEDAD APPROVING IN-KIND SERVICES, PARK USE FEE WAIVER AND STREET CLOSURE OF FRONT STREET BETWEEN MAIN STREET AND SOLEDAD STREET FOR THE 38th ANNUAL CHRISTMAS AND FESTIVITIES EVENT AT CESAR CHAVEZ PARK

WHEREAS, for 37 years, the Soledad-Mission Chamber of Commerce (Chamber) has been organizing annual Christmas Parades and Festivities at Cesar Chavez Park, however, this year the Christmas events are being organized by the Christmas Committee and the City of Soledad. Due to the positive benefit for the community, the City has long been a partner; and

WHEREAS, the Christmas Committee has requested the use of the Cesar Chavez Park and a waiver of fees for their annual Christmas and Festivities Event and closure of Front Street from Main Street to Soledad Street to be held on Saturday, December 7, 2024, from 2:00 pm to 8:00 pm, with an additional hour allocated for set-up and clean-up; and

WHEREAS, this event again will include a street parade, children's activities with Santa Claus, and food sales from non-profit agencies; and

WHEREAS, the Christmas Committee also requested in-kind services of the Soledad Police Department to lead the parade efforts, the Public Works Department to ensure that the streets are closed, and the Fire Department (Cal Fire) to showcase Santa Claus at the end of the parade; and

WHEREAS, the Council desires to support safe, family friendly events that benefit the community and instill a sense of social cohesion and Soledad pride.

NOW, THEREFORE, BE IT RESOLVED by the City Council of the City of Soledad that the request of the Christmas Committee for the use of Cesar Chavez Park and fee waiver, in-kind services of Soledad Staff and the street closure of Front Street from Main Street to Soledad Street for the 38th Annual Christmas and Festivities Event at Cesar Chavez Park is hereby approved.

PASSED AND ADOPTED by the City Council of the City of Soledad, at a regular meeting duly held on the 6th day of November 2024, by the following vote:

AYES, and in favor thereof Councilmembers:

NOES, Councilmembers:

ABSENT, Councilmembers:

ABSTAIN, Councilmembers:

ANNA M. VELAZQUEZ, Mayor

ATTEST:

MEGAN HUNTER, City Clerk

Attachment 1

OCT 28 2024
CITY OF SOLEDAD
PLANNING DEPARTMENT

Attachment 2

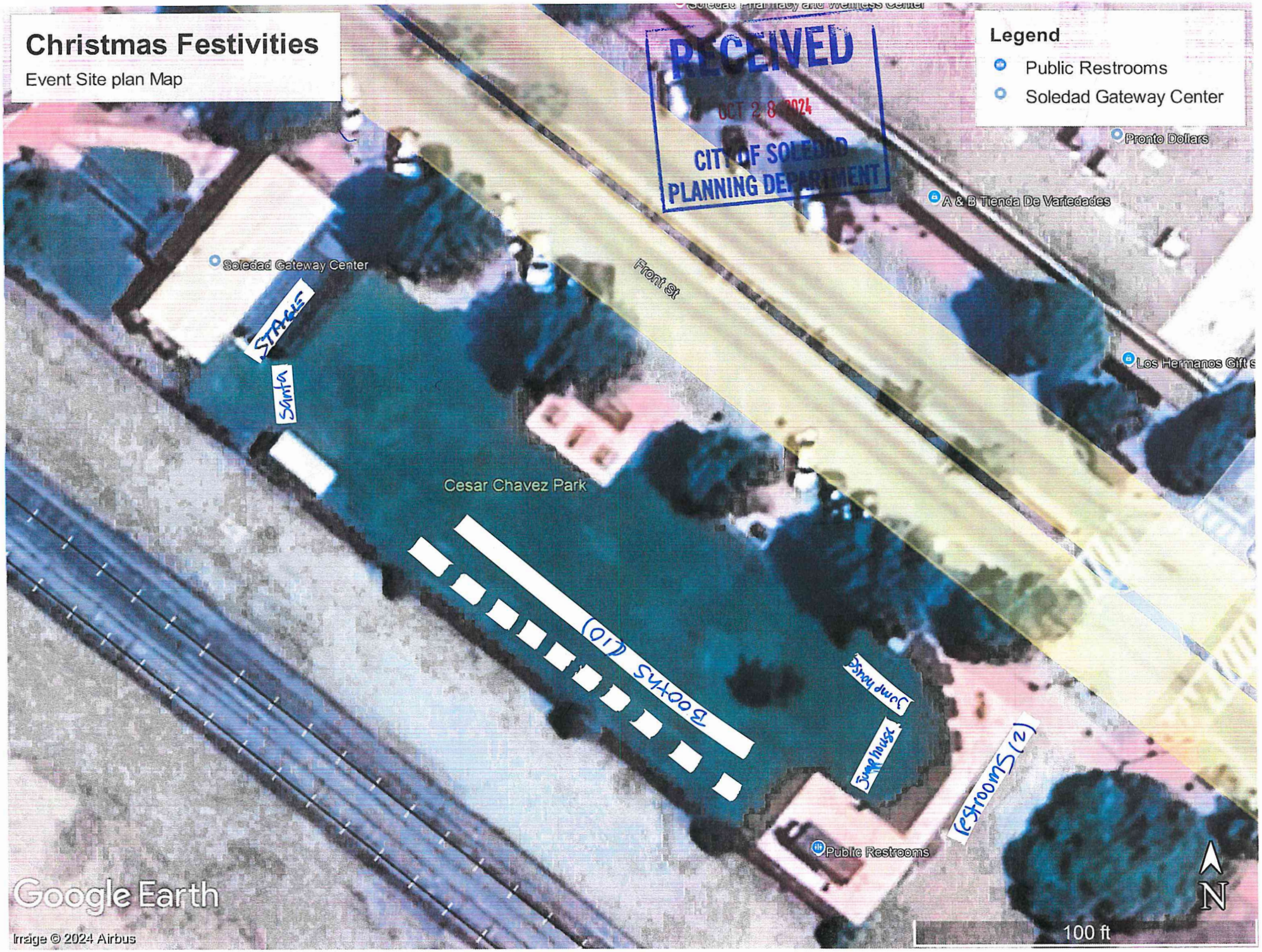

RECEIVED
OCT 28 2024
CITY OF SOLEDAD
PLANNING DEPARTMENT

AGENDA ITEM NO. 11.

CITY OF SOLEDAD
STAFF REPORT

SUBJECT: **Resolution No. 6169, A Resolution of the City Council of the City of Soledad Approving an Agreement with Cannon Corporation for a Water System Facilities – Reliability and Condition Assessment in the Amount Not to Exceed $151,700 and Authorizing the City Manager to Execute Said Agreement on Behalf of the City of Soledad**

TO: **Honorable Mayor Velazquez and City Council**

FROM: **Donald Wilcox, Public Works Director**

THROUGH: **Megan Hunter, City Manager**

MEETING DATE: **November 6, 2024**

Recommendation

It is recommended that the City Council of the City of Soledad consider and adopt Resolution No. 6169, "Approving an Agreement with Cannon Corporation for a Water System Facilities – Reliability and Condition Assessment in the Amount Not to Exceed $151,700 and Authorizing the City Manager to Execute Said Agreement on Behalf of the City of Soledad".

Executive Summary

Soledad has prepared Water System Master Plans and updates in the past, but the City has not prepared a Water System Facilities - Reliability and Condition Assessment. A Reliability and Condition Assessment looks at existing facilities, equipment and records to determine major maintenance needed. Due to several recent significant well breakdowns and one emergency action needed to best complete repairs, Council requested staff perform a reliability assessment of the water system. Staff requested a proposal from Cannon Corporation as one of the pre-qualified engineering firms with significant expertise supporting the City's water system including troubleshooting issues on Wells 9, 10 & 11. The proposal is for a not-to-exceed amount of $151,700 based upon a time and materials basis (not lump sum/flat fee) and at the rates listed within their Fee Estimate attached to their proposal.

Background

Soledad has prepared Water System Master Plans and updates in the past, but not prepared a Water System Facilities - Reliability and Condition Assessment in the past. The difference being a Master Plan envisions new facilities needed for growth whereas a Reliability and Condition Assessment looks at existing facilities, equipment and records to determine major maintenance needed. The City's Urban Water Master Plan describes the groundwater available to the City as very adequate from the Forebay Aquifer via the five City wells that are up to 920 feet deep (see attachment).

While each water well, reservoir and pump are inspected daily by City staff, and water quality also checked daily, water facilities run up to 24 hours a day and almost continually during the summer months causing gradual deterioration of the equipment, so the need for major maintenance projects must also be planned and budgeted for.

Review & Analysis

Soledad currently operates on the break-fix schedule for major maintenance of the wells, whereas preventative maintenance is necessary to assure reliability of the wells, especially in the summer, and since Soledad is isolated, there are no adjacent water systems to connect to in case of equipment breakdowns. In the Capital Improvements Plan, we schedule the next well in line to be disassembled, evaluated and repaired, but have deferred these major maintenance projects too long as is evident when we had various failures with four of our five wells over this past summer as well as our booster pump facility, which were quickly repaired to get them back on line quickly and without a thorough preventative maintenance project completed.

The City also has four one-million-gallon water reservoirs that also need major maintenance to avoid situations such as a roof near collapse like Soledad had in 2015. At least one reservoir is overdue for major maintenance.

As Soledad continues to grow, our well capacity also needs to be assessed as the City is still using the same well capacity as we did prior to the Miravale II project and has experienced growth since then. In addition, the Miramonte development will require significant additional capacity that will take years of geological and engineering work to determine the best upgrades to provide the additional capacity needed, such as increasing capacity at existing wells and/or adding additional wells. During major maintenance we can perform a yield test of the wells to see if they are able to sustainably produce more water than currently setup for. This is an expensive but valuable element of the proposed assessment.

The City's water system also has end of useful life issues with many of the major electrical components at each well, including backup generators that may be nearing Monterey Bay Air Resources District (MBARD) "tiered out" status where they will no longer issue air quality permits due to age and emissions. We are applying for grant funding for generator replacements, however grant funding for well or reservoir maintenance is not available.

City staff requested the attached scope and fee proposal from Cannon to prepare a Water System Facilities - Reliability and Condition Assessment to include:

Task 1 – Project Meetings and Coordination – fee estimate $3500

We will orchestrate and attend a project kickoff meeting with City management and staff. This meeting agenda will focus on project understanding, team involvement, project constraints, and the anticipation of design development impediments. This meeting will also include a project introduction, review of background information and project scope, and definition of the project schedule. This meeting represents a key opportunity for representatives from the City to steer the consultant team and further clarify critical elements of the project scope.

We will participate in meetings with the project team, manage the project schedule and budget, and coordinate with the appropriate project team during the duration of the project.

Task 2 – Review of Existing Documentation fee estimate $8800

We have reviewed existing data from the City regarding each facility, as built, and record drawing information for the water system facilities. We will review all existing data including the Water Master Plan (dated April 2019), available motor efficiency testing data, available pump submittal cut-sheets, tank inspection reports, available well step testing data and historic hydrogeologic well reports. We will gain an understanding of the existing service area, as well as the existing sewer model information.

PDF documents will be provided back to the City organized by folders and by facility.

Task 3 - Facility Inspections and Condition Assessment fee estimate $17,800

Cannon's civil and electrical engineers will conduct a field inspection of the various facilities and take detailed notes on the existing. The facilities will be reviewed for civil, mechanical and electrical components. Instrumentation upgrades are already being implemented for critical water facilities. Therefore, NO additional instrumentation review is being conducted as part of the condition assessment. Initial facility rated will be developed.

Task 4 – Condition Assessment Draft Report, Review and Final Report Development fee estimate $28,400

With the completion of the field inspection, a draft condition assessment will be developed for review by the City. The report will include a reliability and condition rated. Recommendation for facility improvements will be provided in the report. Upon gathering comments from the draft report, a final condition assessment report will be completed. Rehabilitation and/or replacement costs will be developed for all major items.

Task 5 - Hydrogeologic Investigation of Well 6, 7, 9 and 11 fee estimate $88,000

Cannon Corporation subconsultant Kear Groundwater will review available data for Wells 6, 7, 9 and 11 and develops reports including:

1. Summary of well data investigation with recommended action items (based on initial data review). This report will document existing conditions as well as historic conditions. One report for each well 6, 7, 9 and 11 will be completed.
2. The efforts for the Variable Rate Yield Testing and Well Efficiency Evaluation report will document a well step test for each Well 6, 7, 9 and 11 will be completed.

Kear GW previously completed these reports for Well No. 10. Similar investigation reports will be completed. A field step draw-down test will be conducted. The results of the testing will be documented and submitted in a report.

Task 6 - Presentations fee estimate $5200

One presentation of the draft report will be made to the City staff and one presentation of the final report will be made to the Council.

The Water System Facilities - Reliability and Condition Assessment will also include cost estimates for all recommended maintenance. Cost information is also necessary in order to update the CIP and Annual Budget as well as future water rate studies.

This project is broken down as shown below, with the main facility/equipment assessment cost of $63,700 and the well capacity testing cost of $88,000 for a total recommended project cost of $151,700:

Task 1 – Kickoff meeting/Site Visit $ 3,500
Task 2 – Review City Record Documents $ 8,800
Task 3 – Facilities Inspection and Condition Assessment $ 17,800
Task 4 – Condition Assessment Draft Report, Review and Final Report $ 28,400
Task 5 – Wells 6, 7 an 11 – Hydrogeologic Reports (Steps Draw-Down) $ 88,000
Task 6 – Presentation - Draft to staff and Final CA to Council $ 5,200
Total Tasks 1-6 (Time and Materials not-to-exceed): $ 151,700

Cannon Corporation has been working with the City as the water system SCADA integrator/PLC programmer and troubleshooting issues on Wells 9, 10 & 11, as well as generator upgrades for all of the wells, so they are very familiar with our water system equipment, and facilities. Therefore, staff recommends that the Council authorize the preparation of a Water System Facilities - Reliability and Condition Assessment by Cannon Corporation in the not-to-exceed amount of $151,700 and on a time and materials basis (not lump sum/flat fee) and at the rates listed within their Fee Estimate attached to their proposal. The City's standard agreement form will be used.

Financial Considerations

The Water System Facilities - Reliability and Condition Assessment estimated fees are based on a time and materials basis, charged for the level of effort expended only (not lump sum or flat fee basis) and in the not to exceed amount of $151,700. Tasks 1-4 & 6 will be funded from the City's Adopted FY 2024-25 Budget, Water Capital Projects Operating Budget Fund 309-6100-5632 in the amount of $63,700, and Task 5 will be funded from Water Capital Projects Impact Fee Fund* 779-7100-5251 in the amount of $88,000.

* - Qualifies for funding via Impact Fees under the 3 projects below as listed in the City's Development Impact Fee Justification Study:

19 - Condition Assessment $75,000
45 - New Well $192,000
46 - New Well $680,000

Alternatives

- Adopt the recommended resolution.
- Do not approve the attached resolution. This is not recommended as the City has a need to evaluate our water system and begin projects intended to sustain the City's water system.

Planning/CEQA

The proposed engineering services agreement is not a project as defined by the California Environmental Quality Act (CEQA) (CEQA Guidelines Section 15378) because it does not cause a direct or foreseeable indirect physical change on or in the environment. Any subsequent discretionary projects resulting from this action will be subjected to CEQA Review.

Public Notice Requirements

None required.

Attachment(s):
Resolution No. 6169

Exhibit A - Cannon Corporation Agreement
Soledad Wells-Forebay Aquifer

RESOLUTION NO. 6169

A RESOLUTION OF THE CITY COUNCIL OF THE CITY OF SOLEDAD APPROVING AN AGREEMENT WITH CANNON CORPORATION FOR A WATER SYSTEMS FACILITIES – RELIABILITY AND CONDITION ASSESSMENT IN THE NOT TO EXECEED AMOUNT OF $151,700 AND AUTHORIZING THE CITY MANAGER TO EXECUTE SAID AGREEMENT ON BEHALF OF THE CITY OF SOLEDAD

WHEREAS, Soledad has prepared Water System Master Plans and updates in the past, but has never prepared a Water System Facilities - Reliability and Condition Assessment; and

WHEREAS, a Master Plan plans new facilities needed for growth whereas a Reliability and Condition Assessment looks at existing facilities, equipment, and records to determine major maintenance needed; and

WHEREAS, the City's water system also has end of useful life issues with many of the major electrical components at each well, including backup generators that may be nearing Monterey Bay Air Resources District (MBARD) "tiered out" status where they will no longer issue air quality permits due to age and emissions; and

WHEREAS, staff have worked with Cannon Corporation on many City water system tasks and issues; and

WHEREAS, the proposed engineering services agreement is not a project as defined by the California Environmental Quality Act (CEQA) (CEQA Guidelines Section 15378). Because the matter does not cause a direct or foreseeable indirect physical change on or in the environment, this matter is not a project. Any subsequent discretionary projects resulting from this action will be subjected to CEQA Review; and

WHEREAS, Tasks 1-4 & 6 of the proposed work will be funded from the City's Adopted FY 2024-25 Budget, Water Capital Projects Operating Budget Fund 309-6100-5632 in the amount of $63,700, and Task 5 will be funded from Water Capital Projects Impact Fee Fund* 779-7100-5251 in the amount of $88,000; and

WHEREAS, therefore, staff recommends that Council authorize the preparation of a Water System Facilities - Reliability and Condition Assessment by Cannon Corporation in the not-to-exceed amount of $151,700 and on a time and materials basis (not lump sum/flat fee) and at the rates listed within their Fee Estimate attached to their proposal.

NOW THEREFORE, BE IT HEREBY RESOLVED, by the City Council of the City of Soledad that the Council approves an Agreement with Cannon Corporation, in an amount not to exceed $151,700 for the Water System Facilities - Reliability and Condition Assessment, a copy of which is attached hereto marked as **Exhibit A,** and by this reference incorporated herein, and authorizes the City Manager to execute said Agreement on behalf of the City of Soledad.

PASSED AND ADOPTED by the City Council of the City of Soledad at a regular meeting duly held on the 6th day of November 2024 by the following vote:

AYES, and in favor thereof, Councilmembers:

NOES, Councilmembers:

ABSENT, Councilmembers:

ABSTAIN, Councilmembers:

_____
ANNA M. VELAZQUEZ, Mayor

ATTEST:

_____
MEGAN HUNTER, City Clerk

CONSULTING SERVICES AGREEMENT BETWEEN THE CITY OF SOLEDAD AND CANNON CORPORATION

THIS AGREEMENT for consulting services is made by and between the City of Soledad ("City") and Cannon Corporation ("Consultant") (together sometimes referred to as the "Parties") as of November 6, 2024 (the "Effective Date").

Section 1. **SERVICES**. Subject to the terms and conditions set forth in this Agreement, Consultant shall provide to City the services described in the Scope of Work attached as Exhibit A at the time and place and in the manner specified therein. In the event of a conflict in or inconsistency between the terms of this Agreement and Exhibit A, the Agreement shall prevail.

1.1 **Term of Services.** The term of this Agreement shall begin on the Effective Date and shall end on December 31, 2026, the date of completion specified in Exhibit A, and Consultant shall complete the work described in Exhibit A on or before that date, unless the term of the Agreement is otherwise terminated or extended, as provided for in Section 8. The time provided to Consultant to complete the services required by this Agreement shall not affect the City's right to terminate the Agreement, as referenced in Section 8.

1.2 **Standard of Performance.** Consultant shall perform all services required pursuant to this Agreement in the manner and according to the standards observed by a competent practitioner of the profession in which Consultant is engaged.

1.3 **Assignment of Personnel.** Consultant shall assign only competent personnel to perform services pursuant to this Agreement. In the event that City, in its sole discretion, at any time during the term of this Agreement, desires the reassignment of any such persons, Consultant shall, immediately upon receiving notice from City of such desire of City, reassign such person or persons.

1.4 **Time.** Consultant shall devote such time to the performance of services pursuant to this Agreement as may be reasonably necessary to meet the standard of performance provided in Section 1.1 above and to satisfy Consultant's obligations hereunder.

1.5 **Public Works Requirements.** Because the services described in Exhibit A include "work performed during the design and preconstruction phases of construction including, but not limited to, inspection and land surveying work," the services constitute a public works within the definition of Section 1720(a)(1) of the California Labor Code. As a result, Consultant is required to comply with the provisions of the Labor Code applicable to public works, to the extent set forth in Exhibit C.

Section 2. **COMPENSATION.** City hereby agrees to pay Consultant a sum not to exceed **$151,700** notwithstanding any contrary indications that may be contained in Consultant's proposal, for services to be

performed and reimbursable costs incurred under this Agreement. In the event of a conflict between this Agreement and Consultant's proposal, attached as Exhibit A, regarding the amount of compensation, the Agreement shall prevail. City shall pay Consultant for services rendered pursuant to this Agreement at the time and in the manner set forth herein. The payments specified below shall be the only payments from City to Consultant for services rendered pursuant to this Agreement. Consultant shall submit all invoices to City in the manner specified herein. Except as specifically authorized by City in writing, Consultant shall not bill City for duplicate services performed by more than one person.

Consultant and City acknowledge and agree that compensation paid by City to Consultant under this Agreement is based upon Consultant's estimated costs of providing the services required hereunder, including salaries and benefits of employees and subcontractors of Consultant. Consequently, the parties further agree that compensation hereunder is intended to include the costs of contributions to any pensions and/or annuities to which Consultant and its employees, agents, and subcontractors may be eligible. City therefore has no responsibility for such contributions beyond compensation required under this Agreement.

2.1 **Invoices.** Consultant shall submit invoices, not more often than once a month during the term of this Agreement, based on the cost for services performed and reimbursable costs incurred prior to the invoice date. Invoices shall contain the following information:

- Serial identifications of progress bills; i.e., Progress Bill No. 1 for the first invoice, etc.;
- The beginning and ending dates of the billing period;
- A Task Summary containing the original contract amount, the amount of prior billings, the total due this period, the balance available under the Agreement, and the percentage of completion;
- At City's option, for each work item in each task, a copy of the applicable time entries or time sheets shall be submitted showing the name of the person doing the work, the hours spent by each person, a brief description of the work, and each reimbursable expense;
- The total number of hours of work performed under the Agreement by Consultant and each employee, agent, and subcontractor of Consultant performing services hereunder;
- The Consultant's signature;
- Consultant shall give separate notice to the City when the total number of hours worked by Consultant and any individual employee, agent, or subcontractor of Consultant reaches or exceeds 800 hours within a 12-month period under this Agreement and any other agreement between Consultant and City. Such notice shall include an estimate of the time necessary to complete work described in Exhibit A and the estimate of time necessary to complete work under any other agreement between Consultant and City, if applicable.

2.2 **Monthly Payment.** City shall make monthly payments, based on invoices received, for services satisfactorily performed, and for authorized reimbursable costs incurred. City

shall have 30 days from the receipt of an invoice that complies with all of the requirements above to pay Consultant.

2.3 **Final Payment.** City shall pay the last 10% of the total sum due pursuant to this Agreement within 60 days after completion of the services and submittal to City of a final invoice, if all services required have been satisfactorily performed.

2.4 **Total Payment.** City shall pay for the services to be rendered by Consultant pursuant to this Agreement. City shall not pay any additional sum for any expense or cost whatsoever incurred by Consultant in rendering services pursuant to this Agreement. City shall make no payment for any extra, further, or additional service pursuant to this Agreement.

In no event shall Consultant submit any invoice for an amount in excess of the maximum amount of compensation provided above either for a task or for the entire Agreement, unless the Agreement is modified prior to the submission of such an invoice by a properly executed change order or amendment.

2.5 **Hourly Fees.** Fees for work performed by Consultant on an hourly basis shall not exceed the amounts shown on the compensation schedule attached hereto as Exhibit B.

2.6 **Reimbursable Expenses.** Reimbursable expenses are specified below, and shall not exceed $ 0 . Expenses not listed below are not chargeable to City. Reimbursable expenses are included in the total amount of compensation provided under this Agreement that shall not be exceeded.

2.7 **Payment of Taxes.** Consultant is solely responsible for the payment of employment taxes incurred under this Agreement and any similar federal or state taxes.

2.8 **Payment upon Termination.** In the event that the City or Consultant terminates this Agreement pursuant to Section 8, the City shall compensate the Consultant for all outstanding costs and reimbursable expenses incurred for work satisfactorily completed as of the date of written notice of termination. Consultant shall maintain adequate logs and timesheets to verify costs incurred to that date.

2.9 **Authorization to Perform Services.** The Consultant is not authorized to perform any services or incur any costs whatsoever under the terms of this Agreement until receipt of authorization from the Contract Administrator.

Section 3. **FACILITIES AND EQUIPMENT.** Except as set forth herein, Consultant shall, at its sole cost and expense, provide all facilities and equipment that may be necessary to perform the services required by this Agreement. City shall make available to Consultant only the facilities and equipment listed in this section, and only under the terms and conditions set forth herein.

City shall furnish physical facilities such as desks, filing cabinets, and conference space, as may be reasonably necessary for Consultant's use while consulting with City employees and reviewing records and

the information in possession of the City. The location, quantity, and time of furnishing those facilities shall be in the sole discretion of City. In no event shall City be obligated to furnish any facility that may involve incurring any direct expense, including but not limited to computer, long-distance telephone or other communication charges, vehicles, and reproduction facilities.

Section 4. **INSURANCE REQUIREMENTS.** Before beginning any work under this Agreement, Consultant, at its own cost and expense, unless otherwise specified below, shall procure the types and amounts of insurance listed below against claims for injuries to persons or damages to property that may arise from or in connection with the performance of the work hereunder by the Consultant and its agents, representatives, employees, and subcontractors. Consistent with the following provisions, Consultant shall provide proof satisfactory to City of such insurance that meets the requirements of this section and under forms of insurance satisfactory in all respects, and that such insurance is in effect prior to beginning work to the City. Consultant shall maintain the insurance policies required by this section throughout the term of this Agreement. The cost of such insurance shall be included in the Consultant's bid. Consultant shall not allow any subcontractor to commence work on any subcontract until Consultant has obtained all insurance required herein for the subcontractor(s) and provided evidence that such insurance is in effect to City. Verification of the required insurance shall be submitted and made part of this Agreement prior to execution. Consultant shall maintain all required insurance listed herein for the duration of this Agreement.

4.1 **Workers' Compensation.** Consultant shall, at its sole cost and expense, maintain Statutory Workers' Compensation Insurance and Employer's Liability Insurance for any and all persons employed directly or indirectly by Consultant. The Statutory Workers' Compensation Insurance and Employer's Liability Insurance shall be provided with limits of not less than $_1,000,0000_ per accident. In the alternative, Consultant may rely on a self-insurance program to meet those requirements, but only if the program of self-insurance complies fully with the provisions of the California Labor Code. Determination of whether a self-insurance program meets the standards of the Labor Code shall be solely in the discretion of the Contract Administrator. The insurer, if insurance is provided, or the Consultant, if a program of self-insurance is provided, shall waive all rights of subrogation against the City and its officers, officials, employees, and volunteers for loss arising from work performed under this Agreement.

4.2 **Commercial General and Automobile Liability Insurance.**

4.2.1 **General requirements.** Consultant, at its own cost and expense, shall maintain commercial general and automobile liability insurance for the term of this Agreement in an amount not less than $ 1,000,000 per occurrence, combined single limit coverage for risks associated with the work contemplated by this Agreement. If a Commercial General Liability Insurance or an Automobile Liability form or other form with a general aggregate limit is used, either the general aggregate limit shall apply separately to the work to be performed under this Agreement or the general aggregate limit shall be at least twice the required occurrence limit. Such coverage shall include but shall not be limited to, protection against claims arising from bodily and personal injury, including death resulting

therefrom, and damage to property resulting from activities contemplated under this Agreement, including the use of owned and non-owned automobiles.

4.2.2 **Minimum scope of coverage.** Commercial general coverage shall be at least as broad as Insurance Services Office Commercial General Liability occurrence form CG 0001 (most recent edition) covering comprehensive General Liability on an "occurrence" basis. Automobile coverage shall be at least as broad as Insurance Services Office Automobile Liability form CA 0001, Code 1 (any auto). No endorsement shall be attached limiting the coverage.

4.2.3 **Additional requirements.** Each of the following shall be included in the insurance coverage or added as a certified endorsement to the policy:

a. The Insurance shall cover on an occurrence or an accident basis, and not on a claims-made basis.

b. City, its officers, officials, employees, and volunteers are to be covered as insureds as respects: liability arising out of work or operations performed by or on behalf of the Consultant; or automobiles owned, leased, hired, or borrowed by the Consultant

c. For any claims related to this Agreement or the work hereunder, the Consultant's insurance covered shall be primary insurance as respects the City, its officers, officials, employees, and volunteers. Any insurance or self-insurance maintained by the City, its officers, officials, employees, or volunteers shall be excess of the Consultant's insurance and shall not contribute with it.

d. Each insurance policy required by this clause shall be endorsed to state that coverage shall not be canceled by either party, except after 30 days' prior written notice has been provided to the City.

4.3 **Professional Liability Insurance.**

4.3.1 **General requirements.** Consultant, at its own cost and expense, shall maintain for the period covered by this Agreement professional liability insurance for licensed professionals performing work pursuant to this Agreement in an amount not less than $1,000,000 covering the licensed professionals' errors and omissions. Any deductible or self-insured retention shall not exceed $150,000 per claim.

4.3.2 **Claims-made limitations.** The following provisions shall apply if the professional liability coverage is written on a claims-made form:

a. The retroactive date of the policy must be shown and must be before the date of the Agreement.

b. Insurance must be maintained and evidence of insurance must be provided for at least five years after completion of the Agreement or the work, so long as commercially available at reasonable rates.

c. If coverage is canceled or not renewed and it is not replaced with another claims-made policy form with a retroactive date that precedes the date of this Agreement, Consultant shall purchase an extended period coverage for a minimum of five years after completion of work under this Agreement.

d. A copy of the claim reporting requirements must be submitted to the City for review prior to the commencement of any work under this Agreement.

4.3.3 **Additional Requirements.** A certified endorsement to include contractual liability shall be included in the policy

4.4 **All Policies Requirements.**

4.4.1 **Acceptability of insurers.** All insurance required by this section is to be placed with insurers with a Bests' rating of no less than A:VII.

4.4.2 **Verification of coverage.** Prior to beginning any work under this Agreement, Consultant shall furnish City with complete copies of all policies delivered to Consultant by the insurer, including complete copies of all endorsements attached to those policies. All copies of policies and certified endorsements shall show the signature of a person authorized by that insurer to bind coverage on its behalf. If the City does not receive the required insurance documents prior to the Consultant beginning work, it shall not waive the Consultant's obligation to provide them. The City reserves the right to require complete copies of all required insurance policies at any time.

4.4.3 **Deductibles and Self-Insured Retentions.** Consultant shall disclose to and obtain the written approval of City for the self-insured retentions and deductibles before beginning any of the services or work called for by any term of this Agreement. At the option of the City, either: the insurer shall reduce or eliminate such deductibles or self-insured retentions as respects the City, its officers, employees, and volunteers; or the Consultant shall provide a financial guarantee satisfactory to the City guaranteeing payment of losses and related investigations, claim administration and defense expenses.

4.4.4 **Wasting Policies.** No policy required by this Section 4 shall include a "wasting" policy limit (i.e. limit that is eroded by the cost of defense).

4.4.5 **Waiver of Subrogation.** Consultant hereby agrees to waive subrogation which any insurer or contractor may require from vendor by virtue of the payment of any loss. Consultant agrees to obtain any endorsements that may be necessary to affect this waiver of subrogation.

The Workers' Compensation policy shall be endorsed with a waiver of subrogation in favor of the entity for all work performed by the consultant, its employees, agents, and subcontractors.

4.4.6 **Subcontractors.** Consultant shall include all subcontractors as insureds under its policies or shall furnish separate certificates and certified endorsements for each subcontractor. All coverages for subcontractors shall be subject to all of the requirements stated herein.

4.5 **Remedies.** In addition to any other remedies City may have if Consultant fails to provide or maintain any insurance policies or policy endorsements to the extent and within the time herein required, City may, at its sole option exercise any of the following remedies, which are alternatives to other remedies City may have and are not the exclusive remedy for Consultant's breach:

- Obtain such insurance and deduct and retain the amount of the premiums for such insurance from any sums due under the Agreement;
- Order Consultant to stop work under this Agreement or withhold any payment that becomes due to Consultant hereunder, or both stop work and withhold any payment, until Consultant demonstrates compliance with the requirements hereof; and/or
- Terminate this Agreement.

Section 5. **INDEMNIFICATION AND CONSULTANT'S RESPONSIBILITIES.** Consultant shall, to the fullest extent allowed by law, with respect to all Services performed in connection with this Agreement, defend with counsel acceptable to City, indemnify, and hold City, its officers, employees, agents, and volunteers, harmless from and against any and all claims that arise out of, pertain to, or relate to the negligence, recklessness, or willful misconduct of the Consultant, ("Claims"). Consultant will bear all losses, costs, damages, expense and liability of every kind, nature and description that arise out of, pertain to, or relate to such Claims, whether directly or indirectly ("Liability"). Such obligations to defend, hold harmless and indemnify the City shall not apply to the extent that such Liabilities are caused by the sole negligence, active negligence, or willful misconduct of the City.

With respect to third party claims against the Consultant, the Consultant waives any and all rights of any type of express or implied indemnity against the Indemnitees.

Notwithstanding the forgoing, to the extent this Agreement is a "construction contract" as defined by California Civil Code section 2783, as may be amended from time to time, such duties of Consultant to indemnify shall not apply when to do so would be prohibited by California Civil Code Section 2782.

Section 6. STATUS OF CONSULTANT.

6.1 **Independent Contractor.** At all times during the term of this Agreement, Consultant shall be an independent contractor and shall not be an employee of City. City shall have the right to control Consultant only insofar as the results of Consultant's services rendered pursuant to this Agreement and assignment of personnel pursuant to Subparagraph 1.3; however, otherwise City shall not have the right to control the means by which Consultant accomplishes services rendered pursuant to this Agreement. Notwithstanding any other City, state, or federal policy, rule, regulation, law, or ordinance to the contrary, Consultant and any of its employees, agents, and subcontractors providing services under this Agreement shall not qualify for or become entitled to, and hereby agree to waive any and all claims to, any compensation, benefit, or any incident of employment by City, including but not limited to eligibility to enroll in the California Public Employees Retirement System (PERS) as an employee of City and entitlement to any contribution to be paid by City for employer contributions and/or employee contributions for PERS benefits.

6.2 **Consultant Not an Agent.** Except as City may specify in writing, Consultant shall have no authority, express or implied, to act on behalf of City in any capacity whatsoever as an agent. Consultant shall have no authority, express or implied, pursuant to this Agreement to bind City to any obligation whatsoever.

Section 7. LEGAL REQUIREMENTS.

7.1 **Governing Law.** The laws of the State of California shall govern this Agreement.

7.2 **Compliance with Applicable Laws.** Consultant and any subcontractors shall comply with all laws and regulations applicable to the performance of the work hereunder, including but not limited to, the California Building Code, the Americans with Disabilities Act, and any copyright, patent or trademark law. Consultant's Failure to comply with any law(s) or regulation(s) applicable to the performance of the work hereunder shall constitute a breach of contract.

7.3 **Other Governmental Regulations.** To the extent that this Agreement may be funded by fiscal assistance from another governmental entity, Consultant and any subcontractors shall comply with all applicable rules and regulations to which City is bound by the terms of such fiscal assistance program.

7.4 **Licenses and Permits.** Consultant represents and warrants to City that Consultant and its employees, agents, and any subcontractors have all licenses, permits, qualifications, and approvals of whatsoever nature that are legally required to practice their respective professions. Consultant represents and warrants to City that Consultant and its

employees, agents, any subcontractors shall, at their sole cost and expense, keep in effect at all times during the term of this Agreement any licenses, permits, and approvals that are legally required to practice their respective professions. In addition to the foregoing, Consultant and any subcontractors shall obtain and maintain during the term of this Agreement valid Business Licenses from City.

7.5 **Nondiscrimination and Equal Opportunity.** Consultant shall not discriminate, on the basis of a person's race, religion, color, national origin, age, physical or mental handicap or disability, medical condition, marital status, sex, or sexual orientation, against any employee, applicant for employment, subcontractor, bidder for a subcontract, or participant in, recipient of, or applicant for any services or programs provided by Consultant under this Agreement. Consultant shall comply with all applicable federal, state, and local laws, policies, rules, and requirements related to equal opportunity and nondiscrimination in employment, contracting, and the provision of any services that are the subject of this Agreement, including but not limited to the satisfaction of any positive obligations required of Consultant thereby.

Consultant shall include the provisions of this Subsection in any subcontract approved by the Contract Administrator or this Agreement.

Section 8. TERMINATION AND MODIFICATION.

8.1 **Termination.** City may cancel this Agreement at any time and without cause upon written notification to Consultant.

Consultant may cancel this Agreement upon 60 days' written notice to City and shall include in such notice the reasons for cancellation.

In the event of termination, Consultant shall be entitled to compensation for services performed to the effective date of termination; City, however, may condition payment of such compensation upon Consultant delivering to City any or all documents, photographs, computer software, video and audio tapes, and other materials provided to Consultant or prepared by or for Consultant or the City in connection with this Agreement.

8.2 **Extension.** City may, in its sole and exclusive discretion, extend the end date of this Agreement beyond that provided for in Subsection 1.1. Any such extension shall require a written amendment to this Agreement, as provided for herein. Consultant understands and agrees that, if City grants such an extension, City shall have no obligation to provide Consultant with compensation beyond the maximum amount provided for in this Agreement. Similarly, unless authorized by the Contract Administrator, City shall have no obligation to reimburse Consultant for any otherwise reimbursable expenses incurred during the extension period.

8.3 **Amendments.** The parties may amend this Agreement only by a writing signed by all the parties.

8.4 **Assignment and Subcontracting.** City and Consultant recognize and agree that this Agreement contemplates personal performance by Consultant and is based upon a determination of Consultant's unique personal competence, experience, and specialized personal knowledge. Moreover, a substantial inducement to City for entering into this Agreement was and is the professional reputation and competence of Consultant. Consultant may not assign this Agreement or any interest therein without the prior written approval of the Contract Administrator. Consultant shall not subcontract any portion of the performance contemplated and provided for herein, other than to the subcontractors noted in the proposal, without prior written approval of the Contract Administrator.

8.5 **Survival.** All obligations arising prior to the termination of this Agreement and all provisions of this Agreement allocating liability between City and Consultant shall survive the termination of this Agreement.

8.6 **Options upon Breach by Consultant.** If Consultant materially breaches any of the terms of this Agreement, City's remedies shall included, but not be limited to, the following:

8.6.1 Immediately terminate the Agreement;

8.6.2 Retain the plans, specifications, drawings, reports, design documents, and any other work product prepared by Consultant pursuant to this Agreement;

8.6.3 Retain a different consultant to complete the work described in Exhibit A not finished by Consultant; or

8.6.4 Charge Consultant the difference between the cost to complete the work described in Exhibit A that is unfinished at the time of breach and the amount that City would have paid Consultant pursuant to Section 2 if Consultant had completed the work.

Section 9. KEEPING AND STATUS OF RECORDS.

9.1 **Records Created as Part of Consultant's Performance.** All reports, data, maps, models, charts, studies, surveys, photographs, memoranda, plans, studies, specifications, records, files, or any other documents or materials, in electronic or any other form, that Consultant prepares or obtains pursuant to this Agreement and that relate to the matters covered hereunder shall be the property of the City. Consultant hereby agrees to deliver those documents to the City upon termination of the Agreement. It is understood and agreed that the documents and other materials, including but not limited to those described above, prepared pursuant to this Agreement are prepared specifically for the City and are not necessarily suitable for any future or other use. City and Consultant agree that, until final approval by City, all data, plans, specifications, reports and other documents are confidential and will not be released to third parties without prior written consent of both parties.

9.2 **Consultant's Books and Records.** Consultant shall maintain any and all ledgers, books of account, invoices, vouchers, canceled checks, and other records or documents evidencing or relating to charges for services or expenditures and disbursements charged to the City under this Agreement for a minimum of 3 years, or for any longer period required by law, from the date of final payment to the Consultant to this Agreement.

9.3 **Inspection and Audit of Records.** Any records or documents that Section 9.2 of this Agreement requires Consultant to maintain shall be made available for inspection, audit, and/or copying at any time during regular business hours, upon oral or written request of the City. Under California Government Code Section 8546.7, if the amount of public funds expended under this Agreement exceeds $10,000.00, the Agreement shall be subject to the examination and audit of the State Auditor, at the request of City or as part of any audit of the City, for a period of 3 years after final payment under the Agreement.

Section 10 MISCELLANEOUS PROVISIONS.

10.1 **Attorneys' Fees.** If a party to this Agreement brings any action, including an action for declaratory relief, to enforce or interpret the provision of this Agreement, the prevailing party shall be entitled to reasonable attorneys' fees in addition to any other relief to which that party may be entitled. The court may set such fees in the same action or in a separate action brought for that purpose.

10.2 **Venue.** In the event that either party brings any action against the other under this Agreement, the parties agree that trial of such action shall be vested exclusively in the state courts of California in the County of Monterey or in the United States District Court for the Northern District of California.

10.3 **Severability.** If a court of competent jurisdiction finds or rules that any provision of this Agreement is invalid, void, or unenforceable, the provisions of this Agreement not so adjudged shall remain in full force and effect. The invalidity in whole or in part of any provision of this Agreement shall not void or affect the validity of any other provision of this Agreement.

10.4 **No Implied Waiver of Breach.** The waiver of any breach of a specific provision of this Agreement does not constitute a waiver of any other breach of that term or any other term of this Agreement.

10.5 **Successors and Assigns.** The provisions of this Agreement shall inure to the benefit of and shall apply to and bind the successors and assigns of the parties.

10.6 **Use of Recycled Products.** Consultant shall prepare and submit all reports, written studies and other printed material on recycled paper to the extent it is available at equal or less cost than virgin paper.

10.7 **Conflict of Interest.** Consultant may serve other clients, but none whose activities within the corporate limits of City or whose business, regardless of location, would place Consultant in a "conflict of interest," as that term is defined in the Political Reform Act, codified at California Government Code Section 81000 *et seq.*

Consultant shall not employ any City official in the work performed pursuant to this Agreement. No officer or employee of City shall have any financial interest in this Agreement that would violate California Government Code Sections 1090 *et seq.*

Consultant hereby warrants that it is not now, nor has it been in the previous 12 months, an employee, agent, appointee, or official of the City. If Consultant was an employee, agent, appointee, or official of the City in the previous twelve months, Consultant warrants that it did not participate in any manner in the forming of this Agreement. Consultant understands that, if this Agreement is made in violation of Government Code §1090 *et seq.*, the entire Agreement is void and Consultant will not be entitled to any compensation for services performed pursuant to this Agreement, including reimbursement of expenses, and Consultant will be required to reimburse the City for any sums paid to the Consultant. Consultant understands that, in addition to the foregoing, it may be subject to criminal prosecution for a violation of Government Code § 1090 and, if applicable, will be disqualified from holding public office in the State of California.

10.8 **Solicitation.** Consultant agrees not to solicit business at any meeting, focus group, or interview related to this Agreement, either orally or through any written materials.

10.9 **Contract Administration.** This Agreement shall be administered by Don Wilcox, Public Works Directo ("Contract Administrator"). All correspondence shall be directed to or through the Contract Administrator or his or her designee.

10.10 **Notices.** Any written notice to Consultant shall be sent to:
Larry Kraemer, PE
Cannon Corporation
1050 Southwood Dr.
San Luis Obispo, CA 93401
LarryK@CannonCorp.us

Any written notice to City shall be sent to:
Megan Hunter, City Manager
City of Soledad
P.O. Box 156
Soledad, CA 93960
mhunter@cityofsoledad.gov

10.11 **Professional Seal.** Where applicable in the determination of the contract administrator, the first page of a technical report, first page of design specifications, and each page of

construction drawings shall be stamped/sealed and signed by the licensed professional responsible for the report/design preparation. The stamp/seal shall be in a block entitled "Seal and Signature of Registered Professional with report/design responsibility," as in the following example.

_____ Seal and Signature of Registered Professional with report/design responsibility.

10.12 **Integration.** This Agreement, including the scope of work attached hereto and incorporated herein as Exhibits A, B & C represents the entire and integrated agreement between City and Consultant and supersedes all prior negotiations, representations, or agreements, either written or oral. To the extent there may be a conflict between the consultant proposal terms and the agreement, the City's agreement language prevails.

Exhibit A	Scope of Services
Exhibit B	Payment Schedule
Exhibit C	Public Works Requirements

10.13 **Counterparts.** This Agreement may be executed in multiple counterparts, each of which shall be an original and all of which together shall constitute one agreement.

[SIGNATURES ON FOLLOWING PAGE]

The Parties have executed this Agreement as of the Effective Date.

CITY OF SOLEDAD

_____
Megan Hunter, City Manager

Attest:

_____
Megan Hunter, City Clerk

Approved as to Form:

_____
Michael Rodriquez, City Attorney

CONSULTANT: Cannon Corporation

_____
Larry Kraemer, PE

EXHIBIT A

SCOPE OF SERVICES

.

October 1, 2024

Mr. Donald Wilcox
Public Works Director
City of Soledad
248 Main Street
Soledad, CA 93960

PROJECT: CITY OF SOLEDAD – WATER SYSTEMS FACILITIES - RELIABILITY AND CONDITION ASSESSMENT

Dear Mr. Wilcox,

The City completed a comprehensive system wide water master plan in May 2019. The water system staff and public works engineering staff has been steadily implementing the improvements and upgrades listed in the master plan capital improvements plan. Cannon Corporation is assisting in well upgrades and SCADA PLC system upgrades on most of the system. As follow-up efforts identified in the water master plan, Cannon has prepared a cost proposal for a system-wide Water Facilities Reliability and Condition Assessment report. The intent of this report is to evaluate all the water systems for reliability and conditions.

The City recently experienced a critical reliability issue when three of the five wells went out of service for an extended duration. Cannon has recently been involved with engineering design plans for electrical upgrades including instrumentation work system wide and instrumentation upgrades for Wells 7, 10, and 11. As a result, Cannon is well positioned to provide the necessary condition assessments.

Cannon has prepared this letter proposal for a System Wide Reliability and Condition Assessment.

1. **Well No. 6 –** Data review, pump curve review/hydraulic evaluation, step-draw down testing & report, civil, mechanical, and electrical reliability, and condition assessment.
2. **Well No. 7 –** Data review, pump curve review/evaluation, step-draw down & report, civil, mechanical, and electrical reliability, and condition assessment.
3. **Well No. 9 –** Data review, pump curve review/evaluation, step-draw down testing & report, civil, mechanical, and electrical reliability, and condition assessment.
4. **Well No. 10 –** Condition assessment of existing mechanical piping. (Note: new well design already in motion {for late 2024} - new generator, ATS, and VFD design is being targeted for this well).
5. **Well No. 11 -** Data review, pump curve review/evaluation, step-draw down & report, civil and mechanical reliability and condition assessment. (Note: new VFD design is being targeted for this well in 2024.
6. **Pinnacles Tank –** Data review, review diver reports, and as-built drawings, civil, mechanical, electrical reliability, and condition assessment.

7. **La Cuesta Tank –** Data review, review diver reports and as-built drawings, civil, mechanical, electrical reliability, and condition assessment.
8. **La Cuesta Booster Pump Station –** Data Review, review as-built drawings, civil, mechanical, electrical reliability, and condition assessment.
9. **Pressure Reducing Valves –** Orchard Lane, San Vicente and Serra Lane – data review, as-built drawing, civil, mechanical, and electrical reliability and condition assessment.

Cannon has assisted various other clients with similar condition assessments in the neighboring counties of San Luis Obispo, Kern, Santa Barbara, and Ventura. The following pages list the scope and cost for each of the projects listed above.

If our proposal is acceptable to you, please have your counsel develop an agreement for authorization signatures. If you have any questions, please call me at 805-544-7407.

Sincerely,

Amando Garza, P.E.
Senior Principal Engineer

SCOPE OF WORK

This scope of work was developed based on the Water Master Plan CIP, familiarity with some of the well sites and PRV sites. We discussed the details of the existing facilities needing condition assessment efforts. The scope of works for the water facilities condition assessment is listed below.

Task 1 – Project Meetings and Coordination

We will orchestrate and attend a project kickoff meeting with City management and staff. This meeting agenda will focus on project understanding, team involvement, project constraints, and the anticipation of design development impediments. This meeting will also include a project introduction, review of background information and project scope, and definition of the project schedule. This meeting represents a key opportunity for representatives from the City to steer the consultant team and further clarify critical elements of the project scope.

We will participate in meetings with the project team, manage the project schedule and budget, and coordinate with the appropriate project team during the duration of the project.

Task 2 – Review of Existing Documentation

We have reviewed existing data from the City regarding each facility, as-built, and record drawing information for the water system facilities. We will review all existing data including the Water Master Plan (dated April 2019), available motor efficiency testing data, available pump submittal cut-sheets, tank inspection reports, available well step testing data and historic hydrogeologic well reports. We will gain an understanding of the existing service area, as well as the existing sewer model information.

PDF documents will be provided back to the City organized by folders and by facility.

Task 3 - Facility Inspections and Condition Assessment

Cannon's civil and electrical engineers will conduct a field inspection of the various facilities and take detailed notes on the existing. The facilities will be reviewed for civil, mechanical and electrical components. Instrumentation upgrades are already being implemented for critical water facilities. Therefore, NO additional instrumentation review is being conducted as part of the condition assessment. Initial facility rated will be developed.

Task 4 –Condition Assessment Draft Report, Review and Final Report Development

With the completion of the field inspection, a draft condition assessment will be developed for review by the City. The report will include a reliability and condition rated. Recommendation for facility improvements will be provided in the report. Upon gathering comments from the draft report, a final condition assessment report will be completed. Rehabilitation and/or replacement costs will be developed for all major items.

Four bounded final reports will be submitted to the City.

Task 5 - Hydrogeologic Investigation of Well 6, 7, 9 and 11

Cannon Corporation subconsultant Kear Groundwater will review available data for Wells 6, 7, 9 and 11 and develops reports including:

1. Summary of well data investigation with recommended action items (based on initial data review). This report will document existing conditions as well as historic conditions. One report for each well 6, 7, 9 and 11 will be completed.
2. The efforts for the Variable Rate Yield Testing and Well Efficiency Evaluation report will document a well step test for each Well 6, 7, 9 and 11 will be completed.

Kear GW previously completed these reports for Well No. 10. Similar investigation reports will be completed. A field step draw-down test will be conducted. The results of the testing will be documented and submitted in a report.

.

Task 6 - Presentations

One presentation of the draft report will be made to the City staff and one presentation of the final report will be made to the Council.

ASSUMPTIONS & EXCLUSIONS

The City will provide copies of applicable documents related to existing utilities within the project site, including record drawings from previous projects in the area.

Services that may accompany a project of this type are excluded from this scope of work at this time; these services include the following and may be added to our scope of work on a time and materials basis:

- Project meetings (other than those described in the scope of work).
- Permitting, including local agency liaison, application and permit processing and tracking, and permit fees.

FEES

Fees are based on the rates per the enclosed fee schedule and services will be on time and material not-to-exceed basis. will be do not include Agency checking or recording fees, or title company fees. It is our understanding that this project qualifies for California Prevailing Wages; please provide the Project DIR number.

Task 1 – Kickoff meeting/Site Visit	*$ 3,500*
Task 2 – Review City Record Documents	*$ 8,800*
Task 3 – Facilities Inspection and Condition Assessment	*$ 17,800*
Task 4 – Condition Assessment Draft Report, Review and Final Report	*$ 28,400*
Task 4 – Wells 6, 7 an 11 – Hydrogeologic Reports (Steps Draw-Down)	*$ 88,000*
Task 5 – Presentation - Draft to staff and Final CA to Council	*$ 5,200*
Total Tasks 1-5 (Time and Materials not-to-exceed):	**$ 151,700**

DELIVERABLES

- Meeting Minutes Notes
- Draft Project Report
- Final Project Report
- Electronic Documents collected on Flash Drive (organized according to facility)

ASSUMPTIONS AND EXCLUSIONS

This proposal was based on the following assumptions related to the proposed project:

- Wells No. 6, 7, 9, and 11
    - We are assuming that the City will provide electronic as-built drawings, such as CAD files or PDFs, for the Well No. 7 site and that these files are sufficient to use for background drawings for the project.
- Tanks – La Cuesta and Pinnacles tank sites
    - We are assuming that the City will provide electronic as-built drawings, such as CAD files or PDFs, for the tank sites.
- La Cuesta Booster Pump Station
    - We are assuming that the City will provide electronic as-built drawings, such as CAD files or PDFs, for the tank sites.
- Pressure Reducing Valves - Orchard Lane, San Vicente, and Serra Lane
    - We are assuming that the City will provide electronic as-built drawings, such as CAD files or PDFs, for the Well No. 11 site, and that these files are sufficient to use for background drawings for the project.

Items not specifically identified in the scope of service sections of this proposal are to be excluded from this work effort and would be considered additional services.

ACCEPTANCE OF PROPOSAL

Proposal Date:	October 1, 2024
Client:	City of Soledad
	248 Main Street
	Soledad, CA 93960
Project:	Water Facilities Condition Assessment
Scope of Work:	Condition Assessment for Water Facilities Wells 6, 7, 9,
	and 11. Cuesta and Pinnacles Tanks, PRV-(3)
Fees- T&M, NTE:	$151,700.00

Appendix A details the terms for work. Cannon bills monthly for work in progress and payment is due within 10 calendar days of receipt of the bill. Overdue amounts will be surcharged at 18 percent per annum or 1.5 percent monthly. The fees are based upon current California Prevailing Wages; please provide us with the DIR Project ID. If the client requests, or the client's schedule requires work to be done on an overtime basis, a multiplier of 1.5 will be applied to the above rates for weekdays for daily hours in excess of 8 as well as weekends and a multiplier of 2.0 for daily hours in excess of 12 and holidays.

Please indicate your acceptance of this proposal by signing below.

In witness whereof, the parties hereto have caused this agreement consisting of proposal letter, Appendix A and any other necessary and applicable documents to be executed of the date and year first above written. In Appendix A, Cannon Corporation hereinafter referred to as Cannon. The Client, as noted below, hereinafter referred to as Client.

Client: City of Soledad	Cannon
x _____	_____
Don Wilcox Public Works Director	Larry Kraemer, PE Director of Public Infrastructure
Date: _____	Date: _____

EXHIBIT B

COMPENSATION SCHEDULE

Cannon

2024/2025 Fee Schedule
Bill Rate Ranges
Subject to change

Assistant Resident Engineer I - II	$ 155 - $ 205
Associate Engineer	$ 180 - $ 240
Associate Land Surveyor	$ 210 - $ 230
Associate Landscape Architect	$ 175 - $ 215
Automation Specialist	$ 165 - $ 210
Automation Technician	$ 130 - $ 165
CAD Tech	$ 115 - $ 140
CAD Manager	$ 130 - $ 165
Construction Coordinator I - II	$ 125 - $ 160
Construction Inspector I - III	$ 120 - $ 200
Construction Manager	$ 178 - $ 235
Design Engineer	$ 150 - $ 195
Director/ Department Manager	$ 225 - $ 310
Dry Utilities Coordinator I - II	$ 170 - $ 200
Engineer Tech	$ 120 - $ 150
Engineering Assistant I - II	$ 115 - $ 140
Grant Funding Manager I - II	$ 160 - $ 225
I&E Services Coordinator	$ 120 - $ 140
Information Systems Admin/Manager	$ 135 - $ 168
Land Surveyor	$ 195 - $ 230
Landscape Architect	$ 130 - $ 200
Landscape Designer I - II	$ 120 - $ 142
Lead Automation Specialist	$ 175 - $ 209
Lead Automation Technician	$ 135 - $ 170
Lead Designer	$ 140 - $ 180
Office Engineer / Document Control I-III	$ 115 - $ 164
Plan Check Engineer I - II	$ 140 - $ 198
Planner I - III	$ 130 - $ 175
Planning Assistant	$ 115 - $ 150
Principal Automation Specialist	$ 186 - $ 232
Principal Construction Engineer	$ 210 - $ 293
Principal Designer	$ 140 - $ 200
Principal Engineer	$ 200 - $ 290

Project Designer	$ 125 - $ 179
Project Engineer	$ 153 - $ 205
Resident Engineer	$ 195 - $ 248
Sr. Associate Architect	$ 219 - $ 260
Sr. Associate Engineer	$ 180 - $ 265
Sr. Automation Specialist	$ 185 - $ 225
Sr. Automation Technician	$ 150 - $ 185
Sr. CAD Tech	$ 130 - $ 160
Sr. Construction Manager	$ 217 - $ 323
Sr. Consultant / Principal-in-Charge	$ 285 - $ 385
Sr. Land Surveyor	$ 230 - $ 275
Sr. Landscape Architect	$ 190 - $ 230
Sr. Plan Check Engineer	$ 175 - $ 228
Sr. Principal Designer	$ 145 - $ 225
Sr. Principal Engineer	$ 225 - $ 320
Sr. Project Designer	$ 135 - $ 200
Sr. Project Engineer	$ 165 - $ 225
Sr. Resident Engineer	$ 205 - $ 258
Survey Assistant	$ 115 - $ 145
Survey Technician I - V	$ 143 - $ 218
Technical Writer I - IV	$ 115 - $ 140

Survey Crew Rates - Regular	
One-Man Field	$ 210 - $ 233
Two-Man Field	$ 290 - $ 310
Three-Man Field	$ 390 - $ 410
Two-Man - HDS	$ 348 - $ 367

Survey Crew Rates - Prevailing Wage	
One-Man Field	$ 250 - $ 280
Two-Man Field	$ 389 - $ 412
Three-Man Field	$ 530 - $ 550

Electrical - Prevailing Wage	
Electrician	$ 207 - $ 254

Building and Construction Inspector - Prevailing Wage	
BCI Construction Inspector	$ 168

Forensics Engineering / Expert Testimony Fee Schedule Available Upon Request.

Other Direct Charges	
Black Line Plots	$2.00 per page
Outside Reproduction	Cost + 15%
Mylar Plots	$12.00 per sheet
Automation & Electrical Materials	Cost + 25% (+tax)
Subconsultant Fees	Cost + 15%
Technology Fee	$30/Day
Color Plots	$5.00 per page
Travel and Related Subsistence	Cost + 15%
Standard Mileage Rate	IRS Rate per mile
Airplane Mileage Rate	GSA Rate per mile

Expenses, such as special equipment, shipping costs, travel other than by automobile, parking expenses, and permit fees will be billed at the actual cost plus 15%. If the client requests, or the client's schedule requires work to be done on an overtime basis, a multiplier of 1.5 will be applied to the stated rates for weekdays for daily hours in excess of 8 as well as weekends, and a multiplier of 2.0 for daily hours in excess of 12 and holidays. If the client requests field services to be provided outside of normal working hours, a multiplier of 1.5 will be applied to the stated rates. For prevailing wage projects, if the client requests field services to be provided on any given Sunday, a multiplier of 2.0 will be applied to the stated rates; on or around an observed holiday, other rates may be applied. Survey Crews and Automation Field staff are billed portal to portal. A minimum charge of four hours will be charged for any Automation Field Service calls outside of normal working hours. The stated rates are subject to change, typically on an annual basis.

(effective 7/1/2024)

EXHIBIT C

PROVISIONS REQUIRED FOR PUBLIC WORKS CONTRACTS PURSUANT TO CALIFORNIA LABOR CODE SECTION 1720 *ET SEQ.*

HOURS OF WORK:

A. In accordance with California Labor Code Section 1810, 8 hours of labor in performance of the services described in Exhibit A shall constitute a legal day's work under this contract.

B. In accordance with California Labor Code Section 1811, the time of service of any worker employed in performance of the services described in Exhibit A is limited to eight hours during any one calendar day, and forty hours during any one calendar week, except in accordance with California Labor Code Section 1815, which provides that work in excess of eight hours during any one calendar day and forty hours during any one calendar week is permitted upon compensation for all hours worked in excess of eight hours during any one calendar day and forty hours during any one calendar week at not less than one-and-one-half times the basic rate of pay.

C. The Consultant and its subcontractors shall forfeit as a penalty to the City $25 for each worker employed in the performance of the services described in Exhibit A for each calendar day during which the worker is required or permitted to work more than 8 hours in any one calendar day, or more than 40 hours in any one calendar week, in violation of the provisions of California Labor Code Section 1810 and following.

WAGES:

A. In accordance with California Labor Code Section 1773.2, the City has determined the general prevailing wages in the locality in which the services described in Exhibit A are to be performed for each craft or type of work needed to be as published by the State of California Department of Industrial Relations, Division of Labor Statistics and Research, a copy of which is on file in the City Public Works Office and shall be made available on request. The Consultant and subcontractors engaged in the performance of the services described in Exhibit A shall pay no less than these rates to all persons engaged in performance of the services described in Exhibit A.

B. In accordance with Labor Code Section 1775, the Consultant and any subcontractors engaged in performance of the services described in Exhibit A shall comply Labor Code Section 1775, which establishes a penalty of up to $50 per day for each worker engaged in the performance of the services described in Exhibit A that the Consultant or any subcontractor pays less than the specified prevailing wage. The amount of such penalty shall be determined by the Labor Commissioner and shall be based on consideration of the mistake, inadvertence, or neglect of the Consultant or subcontractor in failing to pay the correct rate of prevailing wages, or the previous record of the Consultant or subcontractor in meeting applicable prevailing wage obligations, or the willful failure by the Consultant or subcontractor to pay the correct rates of

prevailing wages. A mistake, inadvertence, or neglect in failing to pay the correct rate of prevailing wages is not excusable if the Consultant or subcontractor had knowledge of their obligations under the California Labor Code. The Consultant or subcontractor shall pay the difference between the prevailing wage rates and the amount paid to each worker for each calendar day or portion thereof for which each worker was paid less than the prevailing wage rate. If a subcontractor worker engaged in performance of the services described in Exhibit A is not paid the general prevailing per diem wages by the subcontractor, the Consultant is not liable for any penalties therefore unless the Consultant had knowledge of that failure or unless the Consultant fails to comply with all of the following requirements:

1. The contract executed between the Consultant and the subcontractor for the performance of part of the services described in Exhibit A shall include a copy of the provisions of California Labor Code Sections 1771, 1775, 1776, 1777.5, 1813, and 1815.

2. The Consultant shall monitor payment of the specified general prevailing rate of per diem wages by the subcontractor by periodic review of the subcontractor's certified payroll records.

3. Upon becoming aware of a subcontractor's failure to pay the specified prevailing rate of wages, the Consultant shall diligently take corrective action to halt or rectify the failure, including, but not limited to, retaining sufficient funds due the subcontractor for performance of the services described in Exhibit A.

4. Prior to making final payment to the subcontractor, the Consultant shall obtain an affidavit signed under penalty of perjury from the subcontractor that the subcontractor has paid the specified general prevailing rate of per diem wages for employees engaged in the performance of the services described in Exhibit A and any amounts due pursuant to California Labor Code Section 1813.

C. In accordance with California Labor Code Section 1776, the Consultant and each subcontractor engaged in performance of the services described in Exhibit A shall keep accurate payroll records showing the name, address, social security number, work, straight time and overtime hours worked each day and week, and the actual per diem wages paid to each journeyman, apprentice, worker, or other employee employed in performance of the services described in Exhibit A. Each payroll record shall contain or be verified by a written declaration that it is made under penalty of perjury, stating both of the following:

1. The information contained in the payroll record is true and correct.

2. The employer has complied with the requirements of Sections 1771, 1811, and 1815 for any work performed by the employer's employees on the public works project.

The payroll records required pursuant to California Labor Code Section 1776 shall be certified and shall be available for inspection by the Owner and its authorized representatives, the

Division of Labor Standards Enforcement, the Division of Apprenticeship Standards of the Department of Industrial Relations and shall otherwise be available for inspection in accordance with California Labor Code Section 1776.

D. In accordance with California Labor Code Section 1777.5, the Consultant, on behalf of the Consultant and any subcontractors engaged in performance of the services described in Exhibit A, shall be responsible for ensuring compliance with California Labor Code Section 1777.5 governing employment and payment of apprentices on public works contracts.

E. In case it becomes necessary for the Consultant or any subcontractor engaged in performance of the services described in Exhibit A to employ for the services described in Exhibit A any person in a trade or occupation (except executive, supervisory, administrative, clerical, or other non manual workers as such) for which no minimum wage rate has been determined by the Director of the Department of Industrial Relations, the Contractor shall pay the minimum rate of wages specified therein for the classification which most nearly corresponds to services described in Exhibit A to be performed by that person. The minimum rate thus furnished shall be applicable as a minimum for such trade or occupation from the time of the initial employment of the person affected and during the continuance of such employment.

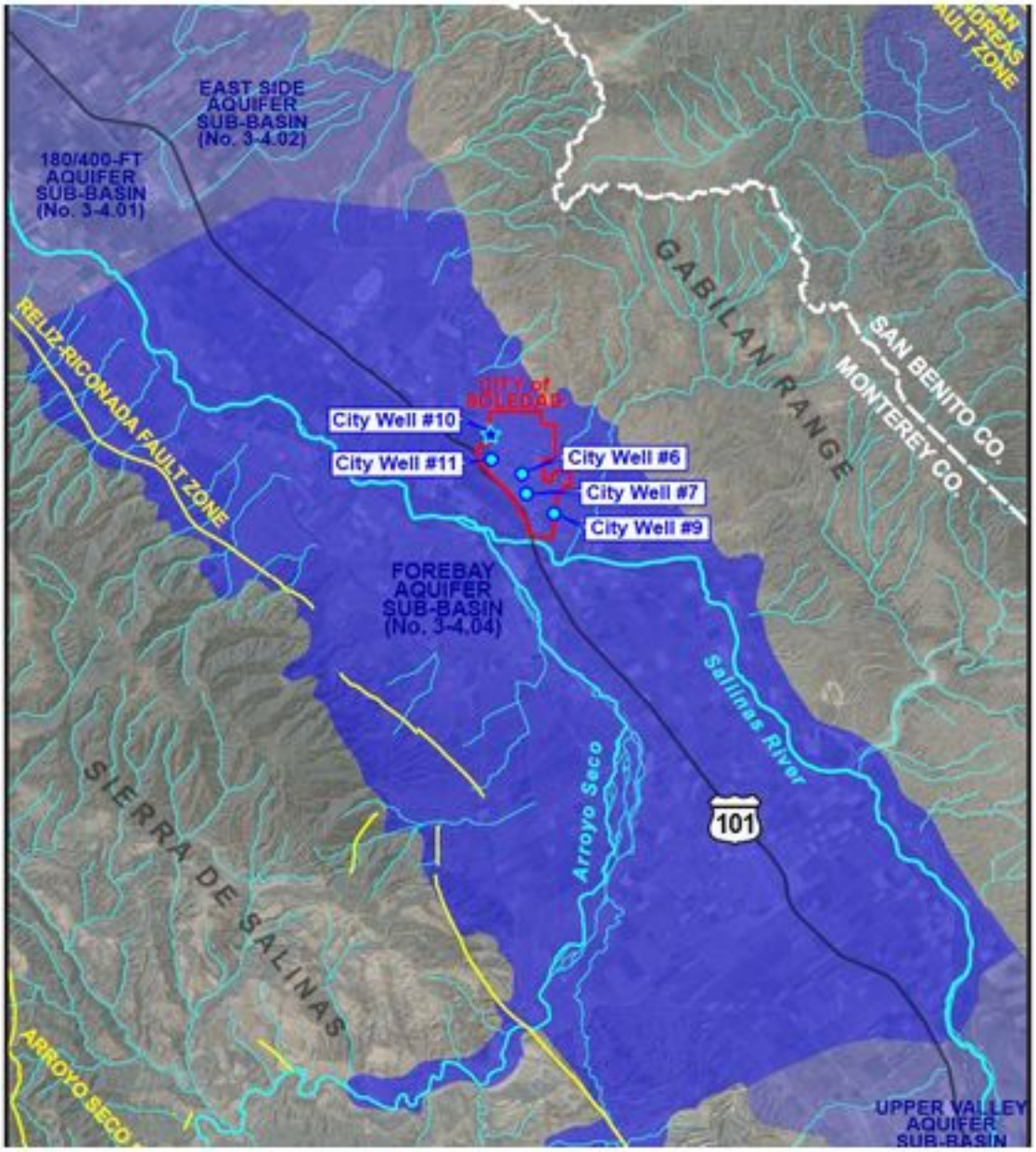
EAST SIDE
AQUIFER
SUB-BASIN
(No. 3-4.02)
180/400-FT
AQUIFER
SUB-BASIN
(No. 3-4.01)
RELIZ-RICONADA FAULT ZONE
GABILAN RANGE
SAN BENITO CO.
MONTEREY CO.
City Well #10
City Well #11
City Well #6
City Well #7
City Well #9
FOREBAY
AQUIFER
SUB-BASIN
(No. 3-4.04)
Salinas River
Arroyo Seco
101
SIERRA DE SALINAS
ARROYO SECO
UPPER VALLEY
AQUIFER
SUB-BASIN

AGENDA ITEM NO. 12.

CITY OF SOLEDAD
STAFF REPORT

SUBJECT: **Resolution No. 6170, A Resolution of the City Council of the City of Soledad Declaring Surplus Office Furniture and Authorizing the Sale, Donation or Disposal of Such Property**

TO: **Honorable Mayor Velazquez and City Council**

FROM: **Mike Howard, Finance Director**

THROUGH: **Megan Hunter, City Manager**

MEETING DATE: **November 6, 2024**

Recommendation

It is recommended that the City Council of the City of Soledad adopt Resolution No. 6170, "Declaring Surplus Office Furniture and Authorizing the Sale, Donation or Disposal of Such Property".

Executive Summary

City property is occasionally declared surplus due to age, cost of maintenance, obsolescence, or some other relevant factor. Disposal of said property cannot take place until it is formally declared surplus by the City Council. In previous years, the surplus property has consisted of vehicles, office furniture and equipment, e-waste (such as obsolete computers and peripherals), tools, equipment, unclaimed recovered property, and other miscellaneous items.

Background

Under Government State Code Section 37350 – 37351, the City can dispose of property for the City's common benefit. Since the last surplus project, dated August 2024, City staff has identified additional surplus items consisting of office furniture (seven chairs) that has been replaced as part of the City Hall Council Chambers Upgrade Project.

Review & Analysis

The seven chairs identified as surplus property are no longer needed by the City as these have been replaced as part of the upgrade project of the City Hall Council Chambers. If declared surplus by the City Council and authorized for disposal, the surplus items will be donated to a local non-profit. In the past, certain surplus equipment has been donated to local non-profit organizations.

Financial Considerations

Since the office furniture will be donated, no proceeds will be collected. The cost of replacement for

these chairs has been budgeted and will have no financial impact.

Alternatives

- Adopt Resolution No. 6170, declaring items as surplus and authorizing sale, donation, or disposal of such property;
- Take no action. This is not recommended as the City has limited storage capacity.
- Provide alternative direction to staff.

Planning/CEQA

The approval and declaration of surplus property is not considered a project for purposes of CEQA since it has no potential for resulting in either a direct or indirect impact to the environment. (See CEQA Guidelines Section 15378.)

Public Notice Requirements

None required.

Attachment(s):
Resolution No. 6170

RESOLUTION NO. 6170

A RESOLUTION OF THE CITY COUNCIL OF THE CITY OF SOLEDAD DECLARING SURPLUS EQUIPMENT AND AUTHORIZING THE SALE, DONATION, OR DISPOSAL OF SUCH PROPERTY

WHEREAS, Government State Code Section 37350 - 37351 provides for the ability of cities to dispose of property for the common benefit of the City; and

WHEREAS, the City of Soledad has accumulated material that is either obsolete, outdated or is no longer of use to the City and thus is considered surplus property; and

WHEREAS, the value, obsolescence and condition of these items make it impractical to trade the same in on future purchases of new inventory items and to obtain a maximum return for said surplus items, and as such, it is in the best interest of the City to sell, donate or dispose of the same; and

WHEREAS, the City Council of the City of Soledad has in the past declared obsolete, outdated or property no longer of use to the City as surplus property and authorized that the property be sold, destroyed or donated to other agencies for use; and

WHEREAS, staff has identified office furniture (seven chairs) and is recommending that the Council deem this office furniture as surplus property and direct staff to dispose of such property.

NOW, THEREFORE, BE IT RESOLVED by the City Council of the City of Soledad as follows:

1. Based upon the findings and recommendations of City Staff, the items of inventory belonging to said City, consisting of office furniture (seven chairs), are declared surplus to the foreseeable needs of the City; and

2. That it is deemed to be for the common benefit of the residents of said City to dispose of said inventory by sale, donation or other appropriate means.

PASSED AND ADOPTED by the City Council of the City of Soledad at a regular meeting duly held on the 6th day of November 2024 by the following vote:

AYES, and in favor of, Councilmembers:

NOES, Councilmembers:

ABSENT, Councilmembers:

ABSTAIN, Councilmembers:

_____
ANNA M. VELAZQUEZ, Mayor

ATTEST:

_____
MEGAN HUNTER, City Clerk

AGENDA ITEM NO. 13.

CITY OF SOLEDAD
STAFF REPORT

SUBJECT: **Resolution No. 6171, A Resolution of the City Council of the City of Soledad Approving the Memorandum of Understanding (MOU) Between the City of Soledad and the Hartnell College Foundation for of the S.O.A.R Ambassadors Pilot Program - Asset Mapping Project**

TO: **Honorable Mayor Velazquez and City Council**

FROM: **Jesus Valenzuela, Community Engagement Manager**

THROUGH: **Megan Hunter, City Manager**

MEETING DATE: **November 6, 2024**

Recommendation

It is recommended that the City Council consider and adopt Resolution No. 6171 "Approving the Memorandum of Understanding (MOU) Between the City of Soledad and the Hartnell College Foundation for of the S.O.A.R Ambassadors Pilot Program - Asset Mapping Project".

Executive Summary

The Student Opportunity and Achievement Rising (S.O.A.R.) Youth Ambassadors Pilot Program is an initiative funded by the Wallace Foundation and the Hartnell College Foundation to engage youth from the Salinas Valley in a comprehensive asset mapping project. This program aims to empower youth ambassadors by enhancing their civic engagement, leadership, and community advocacy skills. The pilot program, supported by multiple partners and advisors, will provide local youth with the training, mentorship, and tools to map community resources critical to workforce readiness, economic mobility, and other community needs. Through this project, S.O.A.R. Youth Ambassadors will identify assets, analyze data, and offer recommendations to support youth in the Salinas Valley. The Hartnell College Foundation will provide $10,000 to the City of Soledad to support youth participation in this initiative.

Background

The S.O.A.R. Youth Ambassadors program seeks to foster civic engagement, advocacy, and youth leadership by involving youth in community asset mapping. The pilot, building upon insights and successes of the Modern Life Skills Mentoring Initiative and the Salinas Valley 5 Cities Rising Initiatives, is specifically tailored to serve youth aged 15-18 from the Salinas Valley and, potentially, from other rural regions in Monterey and Santa Cruz counties. Through their participation, youth will gain experience in leadership, community service, and strategic thinking as they address critical issues affecting their communities, such as economic development, educational resources, and workforce readiness.

Current partners include the City of Gonzales, City of Greenfield, CHISPA, C4 Consulting, Hartnell College Foundation, RYS Consulting, and Dr. Jennifer L. Lovell.

Review & Analysis

The project includes the following components as outlined in the MOU:

1. Asset Mapping: Youth ambassadors will undertake an asset mapping project to assess resources supporting youth workforce readiness. This includes identifying gaps and opportunities in existing services and highlighting areas for improvement, particularly focusing on resources available to middle and high school youth.
2. Objectives: Key objectives include expanding knowledge, building connections, and activating youth-driven solutions to improve developmental supports within the region. The project aims to enhance youth agency and connect youth to career and college readiness opportunities.
3. Program Structure and Support: The project will operate in five phases, from initial planning through final debrief and celebration, concluding in early November. Youth ambassadors will be supported by a team of advisors, including experienced mentors and community engagement specialists, who will guide their asset mapping and analysis efforts.
4. Community Benefits: The S.O.A.R. project is anticipated to create a roadmap of resources and actionable recommendations to enhance youth services in Monterey County. This will provide local organizations with valuable insights into youth-serving opportunities, further informing city policies and programs aimed at promoting youth development and engagement.

By entering into the Memorandum of Understanding with the Hartnell College Foundation, the City would be eligible to receive $10,000 to support the Youth Ambassadors (the City's Youth Commissioners) who have already been participating in this pilot and to connect the mapping project to the work of the Youth Council.

Financial Considerations

The City will receive $10,000 to support coordination and implementation of this project and alignment with our work with the Youth Council.

Alternatives

- Adopt the Resolution approving the signing of the MOU.
- Disapprove the Resolution and provide other direction to staff.

Planning/CEQA

The City of Soledad has determined that the proposed action of approving this MOU is not a project as defined by the California Environmental Quality Act (CEQA) per Guidelines Section 15378.

Public Notice Requirements

Not required.

Attachment(s):
Resolution No. 6171
Hartnell MOU - Asset Mapping YCELD

RESOLUTION NO. 6171

A RESOLUTION OF THE CITY COUNCIL OF THE CITY OF SOLEDAD APPROVING A MEMORANDUM OF UNDERSTANDING BETWEEN THE CITY OF SOLEDAD AND THE HARTNELL COLLEGE FOUNDATION FOR THE S.O.A.R. YOUTH AMBASSADORS PILOT PROGRAM– ASSET MAPPING PROJECT

WHEREAS, The City of Soledad is committed to promoting youth development, civic engagement, and leadership opportunities that enable young people to contribute positively to their communities; and

WHEREAS, the Hartnell College Foundation's Student Opportunity and Achieving Rising (S.O.A.R.) Youth Ambassadors Pilot Program is designed to empower youth aged 15-18 from the Salinas Valley with a focus on identifying community assets that support workforce readiness and economic mobility; and

WHEREAS, the City Council finds that participation in this project aligns with the City's commitment to supporting positive youth development and that the external funding secured by program partners, including grants from the Wallace Foundation, will minimize fiscal impact on the City; and

WHEREAS, approving a Memorandum of Understanding (MOU) allows City staff to coordinate effectively with the S.O.A.R. support team and other project partners, including the cities of Gonzales and Greenfield, to facilitate implementation and encourage youth participation in the program.

NOW THEREFORE BE IT HEREBY RESOLVED that the City Council of the City of Soledad does hereby resolve as follows:

1. The City Council hereby approves the Memorandum of Understanding for the S.O.A.R. Youth Ambassadors Pilot Program – Asset Mapping Project and authorizes the City Manager to execute the same on behalf of the City.
2. The City Council authorizes City staff to take all necessary actions to coordinate with the S.O.A.R. support team, engage with youth ambassadors, and promote the program with local youth networks.
3. The City Council directs staff and Youth Ambassadors to provide periodic updates on the project's progress, outcomes, and findings as they relate to the City's community engagement objectives

PASSED AND ADOPTED by the City Council of the City of Soledad at a regular public meeting held on the 6th day of November 2024, by the following vote:

AYES, and in favor thereof Councilmembers:

NOES, Councilmembers:

ABSENT, Councilmembers:

ABSTAIN, Councilmembers:

_____
ANNA M. VELAZQUEZ, Mayor

ATTEST:

_____
MEGAN HUNTER, City Clerk

Memorandum of Understanding
Modern Life Skills Mentoring Project:
S.O.A.R. Youth Ambassadors - Asset Mapping Pilot
Regional Youth Civic Engagement & Leadership Development

I. INTRODUCTION & GENERAL INFORMATION

This Memorandum of Understanding (MOU) is provided to memorialize and formalize agreements reached between the Hartnell College Foundation and City of Soledad regarding collaborating to advance positive outcomes of the Modern Life Skills Mentoring Initiative.

Key Points of Contact

The following individuals will serve as the Key Points of Contact for this Project:

City of Soledad :
248 Main Street, Soledad, CA 93960 | https://www.cityofsoledad.com

Project Implementation & Advisor to Youth Leaders
Jesus Valenzuela
Main: (831) 356-2825 | jvalenzuela@cityofsoledad.gov

Formal Approval Authority
Megan Hunter, City Manager
Main: (831) 223-5000 | mhunter@cityofsoledad.gov

Hartnell College Foundation:
411 Central Avenue, Salinas, CA 93901 | https://hartnellfoundation.org/

Primary Contact:
Tony Amezcua - Director, Bright Futures Education Partnership
Hartnell College Foundation
Main: (831) 740-8200, Ext. 7742 | tamezcua@hartnellcollegefoundation.org

Formal Approval Authority - Professional Services Agreements
Jacqueline Cruz - Executive Director, Hartnell College Foundation
Main: (831) 755-6810 | jcruz@hartnellcollegefoundation.org

II. PROJECT SUMMARY

A. **Purpose:**
The City of Soledad will serve as a Core Partner advancing positive outcomes related to Modern Life Skills Mentoring (MLSM) Project to achieve two primary goals:

1. Engage youth leaders in the S.O.A.R. Ambassadors - Asset Mapping pilot (see Exhibit A); and
2. Continue fostering ongoing youth civic engagement and leadership development of its existing Youth Leadership Program/Youth Commissioner-Youth Council support, including addressing middle to high school youth interests related to career exploration and readiness, workforce development, and economic mobility.

B. **Context:**

A coalition of education and workforce system practitioners convened throughout 2020-2021, in the midst of a global pandemic, to discover local workforce gaps and connect youth to career pathways leading to well-paying jobs on the Central Coast of California. This coalition evolved to form the "Team Central Coast - Better Careers Design Group" anchored by Hartnell College, the Hartnell College Foundation, Monterey County Workforce Development Board, and the Santa Cruz Human Services Department and its Workforce Development Board. With leadership and technical assistance from Third Sector and funding support from the James Irvine Foundation, the team went through a human-centered design process to engage youth & their families, community-based organizations, and school staff on the Central Coast to develop a solution to local challenges.

As a result of these community engagement efforts, the need for first-generation immigrant youth to receive more guidance on career pathways to well-paying jobs, contributing to upward economic mobility for these youth and their families surfaced. Additionally, the programmatic focus on engaging youth earlier in the cradle-to-career pipeline, when they are in middle school, was an important finding from community engagement. This local context is also affirmed by national research: A national career development and work-based learning leader with 25 years of related experience remarked: "*CTE students start in middle school exploring and discovering career interests and inventories so that by the high school years, a more defined and concrete pathway can be built. This well-defined "road map" or "GPS" allows students to zoom in on the needed education and industry prerequisites, allowing for a successful, lucrative, and purposeful career."*

In response and further building upon engagement insights, the initial design phase culminated in bringing forward the Modern Life Skills Mentoring framework and pilot now ready for further development, implementation, and alignment for greater collective impact. This pilot also brought further investment from the Wallace Foundation. This investment includes support for Asset Mapping from a youth perspective to aid further insights of existing assets and opportunities to improve understanding of existing assets and opportunities related to youth career expiration, employment, and workforce readiness from a youth perspective.

C. **Performance Period**: City of Soledad will provide services as outlined within this MOU through June 30, 2025.

D. **Roles & Responsibilities**: Following are the roles and responsibilities each partner will provide to ensure Project success:

1. ***City of Soledad*** agrees to foster and support youth civic engagement & leadership development per the following considerations:

   a. Foundational Approach: Apply equity-grounded, age-appropriate positive youth development approach with special emphasis on effective civic engagement and leadership development.

   b. Core Activities

      1. Recruit and support the accountable engagement of Youth Leaders in the S.O.A.R. Ambassadors - Asset Mapping pilot experience.

      2. Mentor and advise Youth Leaders to address insights, findings, and recommendations from their S.O.A.R. Ambassadors - Asset Mapping pilot experience.

      3. Support ongoing youth civic engagement and leadership development, with special emphasis on addressing middle to high school youth interests related to civic engagement and leadership development, career exploration and readiness, workforce development, and economic mobility (e.g., continuing the regional South County Youth Summit, additional community service learning action projects, policy advocacy, etc.).

   c. Timeline: Following is a general timeline for this essential element:

      1. August 2024 - November 2024: S.O.A.R. Ambassadors - Asset Mapping Pilot

      2. August 2024 - June 2025: Ongoing Youth Civic Engagement & Leadership

   d. Contribution to Shared Learning, Continuous Improvement, & Sustainability:

      1. Participate in the Caring Connections Network and Community of Practice: Attend and contribute to meetings (generally 1.5 to 2 hours monthly) to enable networking, sharing approaches, learnings, and resources to support best practices as well as continuous improvement and evaluation.

2. Host a Caring Connections Network and Community of Practice gathering (collaborating with Project Manager to finalize Agenda).

3. Provide a written report documenting key activities and outcomes, including how funds were used.

2. ***Hartnell College Foundation*** will fulfill as the backbone organization and fiscal agent for this project, including:

   a. Distributing funds;

   b. Making available resources as appropriate to support Project success (e.g., in-kind facilities use, technology tools supporting virtual collaboration, copies of materials, etc.);

   a. Convening, coordinating, fostering connection, and facilitating continuous improvement through the assignment of Staff primary points of contact throughout the Project.

   c. Seeking additional funding to support program reach, impact, and sustainability; and

   d. Raising awareness and visibility of Project and Partners; and

III. FUNDING, BUDGET, & PAYMENT INFORMATION

In exchange for services provided as outlined in this SOW, the Hartnell College Foundation will sub-grant ***$10,000*** to the City of Soledad. These funds are to be used to:

1. Provide stipends &/or incentives for Youth Leaders participating in the SOAR Ambassadors - Asset Mapping pilot.

2. Support ongoing youth civic engagement and leadership development, with special emphasis on addressing middle to high school youth interests related to career exploration and readiness, workforce development, and economic mobility (e.g., continuing the regional South County Youth Summit, additional community service learning action projects, policy advocacy, etc.).

3. Attend and host a Caring Connections Network and Community of Practice gathering.

Disbursement of funds will be made within 30 days of approval of MOU as indicated by signing and submission of this MOU by authorized parties, accompanied by Invoice from

City of Soledad.

IV. ADDITIONAL TERMS & CONDITIONS

Mutual Hold Harmless: Hartnell College Foundation agrees to hold harmless City, including its elected and appointed councils, boards, commissions, officers, agents, employees, and representatives, from any and all claims, costs, and liability for any personal injury or property damage which may arise directly or indirectly as a result of Hartnell's activities related to this Agreement. City agrees to hold harmless Hartnell College Foundation and its elected and appointed councils, boards, commissions, officers, agents, employees, and representatives from any and all claims, costs, and liability for any personal injury or property damage that may arise directly or indirectly as a result of City's activities related to this Agreement.

V. ACCEPTANCE AND AUTHORIZATION

As indicated by their signatures below and upon the authority of their respective organizations, the following parties agree to the scope, terms and conditions defined in this MOU:

X_____ Date: _____
Megan Hunter, City Manager
City of Soledad

X_____ Date: _____
Jacqueline Cruz, Executive Director
Hartnell College Foundation

EXHIBIT A: S.O.A.R. Youth Ambassadors Pilot: Asset Mapping Project

S.O.A.R. Youth Ambassadors Pilot: ASSET MAPPING PROJECT

***S**tudent **O**pportunity and **A**chievement **R**ising across the Salinas Valley*

Who are S.O.A.R. Youth Ambassadors?

- S.O.A.R. Youth Ambassadors are youth aged 15-18 residing in the Salinas Valley* who are civically engaged in their community.
    - Opportunities for youth residing in additional rural regions in Monterey and Santa Cruz Counties will be extended contingent upon partner agreement and resource availability.
    - For this pilot, this opportunity is being extended to partners directly involved with the Modern Life Skills Mentoring Initiative and/or the Salinas Valley 5 Cities Rising Initiatives who have established youth civic engagement and leadership development programs.

What do S.O.A.R. Youth Ambassadors do?

- S.O.A.R. Youth Ambassadors:
    - Uplift youth voice, power, and influence to catalyze, shape, and bring about positive change in their communities;
    - Collaborate within and across their communities as they organize and lead to improve conditions and outcomes; and
    - Activate other stakeholders including other youth, community members, and adult leaders (e.g., policy makers, electeds, and across sectors such

as government, education, non-profit, and business) on issues critical to their communities' well-being. These include: workforce readiness and economic mobility, education, housing, healthcare, digital access and connection, sustainability, transportation, public safety, childcare, uplifting community celebratory events or milestones through arts and enrichment and other issues.

What are the S.O.A.R. Youth Ambassadors Objectives?

1. **Increasing Knowledge & Skill Development:** To increase youth knowledge and ability to expand access to the developmental assets and resources necessary for youth success and positive change;
2. **Expanding Caring Connections & Resources:** To increase connectivity and collaboration amongst youth leaders while also developing the capacity of communities to be responsive to youth interests, advocacy for co-created more effective, lasting solutions;
3. **Activating Youth Agency in Generating Solutions:** To increase critical thinking and problem solving skills that strengthen youth's positive self-identity, capacity and confidence in bringing about positive change; and
4. **Expanding Experiential & Work-based/Linked Learning Opportunities:** To provide our youth meaningful experiential/applied learning opportunities to connect to the world of work while also supporting their career and college readiness goals with a supportive mentor.

PILOT COHORT - REGIONAL ACTION PROJECT: ASSET MAPPING

Building upon insights and successes of the *Modern Life Skills Mentoring pilot*, this initial S.O.A.R. project focuses on youth engagement and leadership for community asset mapping of resources that support workforce readiness of our region's youth. Initial data suggested a need for improved resources for middle schoolers in Monterey County related to workforce development, economic mobility, and civic engagement. Community asset mapping is a strengths-based approach that identifies a community's existing resources.

This pilot cohort of S.O.A.R. Ambassadors will be engaged in an Asset Mapping project to better understand existing and needed resources that support youth readiness for in-demand, livable wage career opportunities that support their economic mobility and robust, inclusive economic development within our region. The goal of this project is to help "tell the story" of what is currently happening in rural Monterey County that supports youth development, and specifically work-based learning with special attention to crucial developmental supports for middle school to high school youth. Centering youth voices within this initiative helps to leverage their expertise and knowledge about community strengths. More specifically, our youth will:

1. **Identify existing assets**: Engage peers to ensure additional youth input and voices about organizations and services they use and find helpful.

2. Map and analyze resources, including relationships and networks: As the youth map these resources, they will receive support in the analysis of data.

3. **Highlight opportunities and gaps, advocate for data-informed action, solutions**: Collaboratively identify recommendations and areas for growth and collaboratively showcase preliminary findings.

INITIAL RESEARCH QUESTIONS

Following are representative initial research questions the youth will explore:

1. What organizations and groups do youth find supportive and useful in their community?
2. Where are there work-based learning opportunities for youth?

   Examples of specific categories include: job shadowing, work tours; career panels; informational interviews - adults who share career info; volunteer opportunities; people/orgs/agencies that help youth with developing resumes and preparing for interviews, etc.

This asset mapping project will provide grant collaborators and the community with a clearer understanding of existing resources and relationships based on youth perspectives. Youth will also collaboratively identify actionable recommendations for enhancing the impact of youth-serving organizations within the rural corridor of Monterey County. By leveraging youth insights, local organizations, collective impact initiatives, and other stakeholders can better serve youth.

EXPECTATIONS OF YOUTH

Youth leaders who sign-on to this exciting opportunity are expected to fulfill the following:

- Commit to participating in the full duration of the Project no later than Wednesday, September 2nd.
- Participate in Project Orientation & Training on Saturday, September 14th between 9am - 1pm.
- Complete assignments, communicating progress and gaining support as needed throughout the Project.
- Participate in a weekly Project Team webinar/conference call through Project completion..
- Make at least one presentation of findings and recommendations.
- Participate in Project Debrief & Celebration (likely last week of October or first week in November)

S.O.A.R. Ambassadors
Youth from the rural communities have expertise in their own experiences and have knowledge of youth assets, needs, interests, and opportunities within their communities. Their voices and perspectives are essential when assessing current assets and identifying areas for growth. Youth can leverage their social capital with other youth in the community to gather genuine reactions and data. Youth interns will be awarded stipends to participate in an introductory workshop (4 hours), research planning workshops (~3 @ 2 hour each), data collection (~4 hours), data analysis and interpretation workshops (~3 @ 2 hour each), and report writing and presentation (~2 @ 1 hour each) as well as project Debrief & Celebration. Total anticipated time commitment is approximately 25 hours per youth.

SUPPORT TEAM FOR OUR YOUTH

In addition to support from their current Advisors, our youth will benefit from direct training and support from two additional Adult Allies with a proven track record of nurturing and honoring youth voice, power, and influence and special subject matter expertise necessary for this project's success. Following is an overview of Support Team Key Roles & Responsibilities:

SUPPORT TEAM of ADULT ALLIES FOR OUR YOUTH	
Trainers & Mentors	
Jennifer L. Lovell, Ph. D, has a doctorate in Clinical Child Psychology, with a specialization in multicultural psychology and pediatric psychology. Her primary areas of scholarly interest are community-engaged research informing child and family health and wellness. She has served as an adult collaborator and supporter for three projects with the Gonzales Youth Council since February 2020. The youth-participatory action research conducted with GYC has received regional and national attention, and she has co-authored two publications with youth from these projects in peer-reviewed journals.	Rosemary Soto, RYS Consulting With nearly two decades experience initiating and collaborating to develop and execute collective impact in Monterey County, Rosemary's extensive knowledge of and experience successfully partnering and collaborating across sectors to increase assets, resources for our communities, especially members most impacted by systemic inequities, Rosemary will serve as a powerful connector and champion for our youth leaders.

● Integrate best/promising practices of asset mapping and youth participatory action research ● Develop and facilitate Asset Mapping training to orient and enable the youth leaders to gain knowledge, understanding, and skills necessary to successfully achieve project outcomes ● Document and organize materials so training/approach can be used by partners within the Caring Connections Network as appropriate, relevant ● Mentor & coach youth throughout the Project to support their success at all phases of the project -- from direct asset mapping, partner outreach, to preparing presentation, public speaking, including positioning, advocating their interests/perspectives ● Connect youth, project team to resources -- warm introductions, share resources, context, etc. ● Aid the youth to present on Project -- 2-3 presentations to priority stakeholders/strategic opportunities (e.g., City Councils, Board of Supervisors, School Boards, Salinas Valley 5 Cities, Caring Connections Network, &/or Bright Futures Steering Cmte, etc.	
Leadership Advisors	
Youth Commissioners/Councils hosted by Salinas Valley Cities* **<u>City of Gonzales:</u>** Jessica Olmedo-Albor Recreation Coordinator/ Administrative Analyst, Community Engagement Department (831) 675-4206 jalbor@ci.gonzales.ca.us Cindy Aguilar- Castañeda **C4 Consulting,** Associate Strategist - Youth Leadership Specialist (831) 442-4302 cindy@myc4strategist.com **<u>City of Greenfield:</u>** Jose Chavez Medina Community Engagement Specialist jchavez@ci.greenfield.ca.us Fabiola Lopez Community Engagement Coordinator	● Recruit youth leaders will strong probability of follow-through - ideally two consistent representatives from each partner (keeping in mind, youth stipend allocation per partner is currently $1000) ● Continue providing Advisement, Coaching, and Supervision ● Remove barriers to participation, such as transportation to in-person trainings/sessions ● Stay apprised of youth engagement, progress - support follow through, direct communication with the Mentors ● Communicate as part of support, success team ● Steward MOU/Agreement process through formal approval ● Ensure youth leaders receive their stipends

flopez@ci.greenfield.ca.us (831) 304-0116 **<u>City of Soledad:</u>** Jesus Valenzuela Community Engagement Manager jvalenzuela@cityofsoledad.com 831-356-2825 **Youth Councils hosted by Non-Profit Partner** CHISPA Teen Leadership Council (TLC) - Castroville, North County, Salinas focus Yvette Padilla, TLC Advisor ypadilla75@gmail.com 831.229.4237	
Project Management	
C4 Consulting Michelle Slade Founder & Chief Strategist (831) 521-8254 michelle@myc4strategist.com Magaly Santos Assisting Associate magaly@myc4strategist.com	● Provide project management ● Facilitate partnership, collaboration and coordination ● Advise, mentor, coach the Adult Allies ● Aid strategic positioning and visibility ● Report on project to Hartnell, and other stakeholders including Wallace Foundation which is providing the funding for this project. Magaly available to provide insights on GIS as a resource for asset mapping visualization, etc. Also, partner with Cindy for initial project management set-up.
Tony Amezcua Director, Bright Futures Education Partnership Hartnell College Foundation 411 Central Avenue, Salinas, CA 93901	● Shepherd project through Hartnell policies and standard operating procedures ● Elevate project to key stakeholders

Main: (831) 740-8200, Ext. 7742 | tamezcua@hartnellcollegefoundation.org	

TIMELINE

Phase & Timeframe*	**KEY ACTIVITIES**
Phase 1: Planning and Preparation with Core Partners	
August 2024	● Affirm with Core Partner Adult Allies' project goals,expectations, compensation, and timelines. ○ Subject Matter Experts - Training, Facilitation for Youth ○ Hosts & Advisors - S.O.A.R. Ambassadors ○ Project Management ■ Michelle Slade, C4 Consulting - Coordination ■ Tony Amezcua, Hartnell College
	● Finalize Youth Leader Roster
	Initial Asset Search: ● Use current resources (e.g., United Way 211, Bright Futures) to create an initial list of local youth-serving organizations. ● Include citizen associations (e.g., boards, youth groups, clubs) and institutions/organizations (e.g., public programs, institutions) that support youth development in the county. ● Review resources for best practices for asset mapping. ● Conduct initial meetings with youth interns who have been selected/hired for the project.
Phase 2: Prep for Launch with Youth Leaders	
September 2024	Youth-Led Project and Plan: ● Create and provide a 1-3 hour workshop for the youth on youth participatory action research and asset mapping. ● Support youth exploration of manageable project options to collect youth voices and input on youth-serving organizations for middle and high school students in the rural corridor of Monterey County. ● Support youth identification and clarification of project/research design and methodology.

Phase 3: Launch with Youth Leaders, Deep Dive into Data Collection & Analysis	
September - October 2024	Engage Youth Leaders in Orientation & Training Saturday, September 14, 2024
	Data Collection: ● Support youth interns to collect data based on their plan.
	Asset Identification: ● Work with grant collaborators to compile and organize data in a way that will be useful for goals of the project. ● Work with the youth and grant collaborators to develop a system for categorizing organizational assets (e.g., physical space, financial resources, and community relationships). ● Begin mapping relationships and interconnections between organizations/services.
	Gap Analysis ● Identify gaps in resources and opportunities for improvement.
Phase 4: Sharing Findings	
October 2024	Brief Report/Handout ● Provide and explore data visualization options with youth interns. ● Mentor youth to draft and edit a brief report/handout summarizing project findings. ● Share draft with grant collaborators and other stakeholders for feedback. ● Collaboratively generate actionable recommendations that will enhance the utilization of the asset list and address gaps. ● Reflect, incorporate feedback, and finalize the report/handout.
	Presentation ● Collaboratively showcase findings and discuss with stakeholders
Phase 5: Debrief Project & Celebrate	
End of October 2024 - Beginning of November	Youth Leaders, Mentors, and Advisor debrief the Project and celebrate.

AGENDA ITEM NO. 14.

CITY OF SOLEDAD
STAFF REPORT

SUBJECT: **Resolution No. 6174, A Resolution of the City Council of the City of Soledad Accepting the California Highway Patrol FY 24/25 CTFGP Cannabis Tax Fund Program Education and Enforcement Grant, Authorizing the City Manager to Execute the Standard Agreement, and Approving a Related Budget Amendment to the Fiscal Year 24/25 Budget**

TO: **Honorable Mayor Velazquez and City Council**

FROM: **Damon C. Wasson, Chief of Police**

THROUGH: **Megan Hunter, City Manager**

MEETING DATE: **November 6, 2024**

Recommendation

It is recommended the City Council of the City of Soledad consider and adopt Resolution No. 6174, "Accepting the California Highway Patrol FY 24/25 Cannabis Education and Enforcement Grant, Authoring the City Manager to Execute the Standard Agreement, and Approving a Related Amendment to the Fiscal Year 24/25 Budget".

Executive Summary

The Soledad Police Department (SPD) applied for the California Highway Patrol FY24/25 CTFGP Cannabis Tax Fund Grant Program. Funding for this program is allocated pursuant to California Revenue and Taxation Code Section 34019(f)(3)(B) and is contingent upon availability of funds disbursed from the California Cannabis Tax Fund to the State. As a result, the grant award and scope of work may be reduced accordingly. The Police Department received an award letter for the FY24/25 CTFGP Cannabis Tax Fund Grant Program of up to $100,000 starting on July 1, 2024. The intent of the program is to educate the public regarding the dangers of impaired driving, enforce impaired driving laws on the roadway, and improve the Soledad's effectiveness through training and development of new strategies. Staff is seeking approval from the City Council to accept the grant and implement a related budget amendment.

Background

Law Enforcement grants provide financial assistance to allied agencies for the education, prevention, and enforcement of laws related to driving under the influence of alcohol and other drugs, including cannabis, and cannabis products. The program's intent is to educate the public regarding the dangers of impaired driving, enforce impaired driving laws on the roadway, and improve the

Organization/Agency's effectiveness through training and the development of new strategies.
Nothing in this Ordinance is intended to interfere with the otherwise legal, lawful, and ordinary use of legalized cannabis, CBD, or legal cannabis analogs.

Review & Analysis

Medical use marijuana has been legal to use in California since 1996, but it was still illegal for recreational use in California until 2016, but only for adults 21 and older. Even though recreational marijuana use has been legalized in California, it is illegal to smoke it in a public place (any place tobacco smoking is prohibited), ingest marijuana when children are present, possess an open container or paraphernalia in a vehicle, ingest marijuana while driving a vehicle, or be under the influence of marijuana while operating a vehicle. Federal law considers marijuana a Schedule 1 drug, and it is still federally illegal to possess, ingest, grow, transport, and sell.

According to a 2023 CNN health report, driving under the influence of marijuana in countries where marijuana is legal has increased. The report states that documented marijuana-related traffic accidents requiring treatment in an emergency room rose 475%, and alcohol-related drug crashes grew 9.4%.

Investigating marijuana-related accidents and driving events poses a different problem than alcohol-related investigations. The standard roadside intoxilizer is ineffective at detecting marijuana-induced intoxication. New detection and testing devices, such as Oral Fluid Drug screening devices and cannabis/marijuana breath testing equipment, are needed and are provided for in the California Highway Patrol cannabis grant.

The grant funding in this program is used specifically for combating drivers impaired by those under the influence of cannabis/marijuana, DUI checkpoints, school presentations, and maintaining high visibility and educational efforts to the community.

This grant and the accompanying funds will be used to provide statistical data for future grant funding.

Financial Considerations

The financial considerations are negligible, as funding to the program for salaries, tools, and equipment comes directly from the grant. The grant award is up to $100,000 and it is also recommended that City Council approve a budget amendment in FY 24/25 to account for this funding.

Alternatives

- Adopt Resolution No. 6174.
- Do not adopt Resolution No. 6174 and provide other direction to staff.

Planning/CEQA

The City of Soledad has determined that the proposed action of accepting the grant and approval of a related budget amendment is not a project as defined by the California Environmental Quality Act (CEQA) per Guidelines Section 15378.

Public Notice Requirements

None required.

Attachment(s):
Resolution No. 6174
FY24-25 CTFGP Grant Agreement â€“ Soledad PD
Award Letter

RESOLUTION NO. 6174

A RESOLUTION OF THE CITY OF SOLEDAD ACCEPTING AND APPROVING THE STANDARD AGREEMENT FOR THE STANDARD AGREEMENT FOR THE CALIFORNIA HIGHWAY PATROL FY24/25 CTFGP CANNABIS TAX FUND PROGRAM EDUCATION AND ENFORCEMENT GRANT AND APPROVING A RELATED BUDGET AMENDMENT

WHEREAS, the Soledad Police Department (SPD) applied for the California Highway Patrol FY24/25 CTFGP Cannabis Tax Fund Grant Program; and

WHEREAS, the funding for this Grant Agreement is allocated pursuant to California Revenue and Taxation Code Section 34019(f)(3)(B) and is contingent upon availability of funds disbursed from the California Cannabis Tax Fund to the State and the grant award and scope of work to be provided under this Grant Agreement may be reduced accordingly; and

WHEREAS, The Police Department received an award letter for the FY24/25 CTFGP Cannabis Tax Fund Grant Program of up to $100,000 starting on July 1, 2024; and

WHEREAS, the grant funds will be used to provide financial assistance for the education, prevention, and enforcement of laws related to driving under the influence of alcohol and other drugs, including cannabis and cannabis products; and

WHEREAS, the intent of the program is to educate the public regarding the dangers of impaired driving, enforce impaired driving laws on the roadway, and improve the Soledad's effectiveness through training and development of new strategies; and

WHEREAS, the staff is seeking approval from the City Council to accept the grant and implement a related budget amendment.

NOW THEREFORE BE IT RESOLVED, that the City Council of the City of Soledad hereby accepts and approves the Standard Agreement for the California Highway Patrol (CHP) FY24/25 CTFGP Cannabis Tax Fund Grant, approves the related budget amendment to the fiscal year 24/25 budget to increase grant revenues not to exceed $100,000 and expenditures by the same amount, and authorize the City Manager or designee to execute any related grant documents necessary to implement said grant.

PASSED AND ADOPTED at a regular meeting of the City Council of the City of Soledad duly held on the 6ht day of November 2024, by the following vote:

AYES, and in favor thereof, Councilmembers:

NOES, Councilmembers:

ABSENT, Councilmembers:

ABSTAIN, Councilmembers:

_____
ANNA M. VELAZQUEZ, Mayor

ATTEST:

_____
MEGAN HUNTER, City Clerk

Award Number
17950

1. GRANT TITLE
FY24/25 CTFGP Law Enforcement - Soledad Police Department

2. NAME OF ORGANIZATION/AGENCY
Soledad Police Department

3. ORGANIZATION/AGENCY SECTION TO ADMINISTER GRANT
Soledad Police Department

4. PROJECT PERFORMANCE PERIOD
From: 07/01/2024 To: 06/30/2025

5. PURCHASE ORDER NUMBER

6. GRANT OPPORTUNITY INFORMATION DESCRIPTION
Law Enforcement grants provide financial assistance to allied agencies for the education, prevention, and the enforcement of laws related to driving under the influence of alcohol and other drugs, including cannabis and cannabis products.
The intent of the program is to educate the public regarding the dangers of impaired driving, enforce impaired driving laws on the roadway, and improve the Organization/Agency's effectiveness through training and development of new strategies.

7. FUNDS ALLOCATED UNDER THIS GRANT AGREEMENT SHALL NOT EXCEED $100,000.00

8. TERMS AND CONDITIONS
The Grantee agrees to complete the Project, as described in the Project Description. The Grantee's Grant Application, and the California Code of Regulations, Title 13, Division 2, Chapter 13, Sections 1890.00-1890.27, are hereby incorporated into this Grant Agreement by reference.

The parties hereto agree to comply with the Terms and Conditions of the following attachments:

- Schedule A – Project Description, Problem Statement, Goals and Objectives, and Method of Procedure
- Schedule B – Detailed Budget Estimate
- Schedule B-1 – Budget Narrative

We, the officials named below, hereby swear, under penalty of perjury under the laws of the State of California, that we are duly authorized to legally bind the Grant recipient to the above-described Grant Terms and Conditions.

IN WITNESS WHEREOF, this Grant Agreement is executed by the parties hereto.

9. APPROVAL SIGNATURES

A. AUTHORIZED OFFICIAL OF ORGANIZATION/AGENCY
Name: Damon Wasson
Title: Chief Of Police
Phone: (831) 674-5562

Address: 236 Main Street
Soledad, CA 93960

E-Mail: mike.howard@cityofsoledad.com

(Signature) *(Date)*

B. AUTHORIZED OFFICIAL OF CHP
Name: Andrew Beasley Phone: (916) 843-4360
Title: Captain Fax: (916) 322-3169

Address: 601 North 7th Street
Sacramento, CA 95811

E-Mail: ABeasley@chp.ca.gov

(Signature) *(Date)*

C. ACCOUNTING OFFICER OF CHP
Name: C. M. Jones Phone: (916) 843-3531
Title: Commander Fax: (916) 322-3159

Address: 601 North 7th Street
Sacramento, CA 95811

E-Mail: Catrina.Jones@chp.ca.gov

(Signature) *(Date)*

10. AUTHORIZED FINANCIAL CONTACT TO RECEIVE REIMBURSEMENT PAYMENTS

Name: Mike Howard
Title: Finance Manager
Phone: (831) 674-5562

Address: 248 Main Street
Soledad Ca 93960

TERMS AND CONDITIONS

Grantee shall comply with the California Code of Regulations, Title 13, Division 2, Chapter 13 Section 1890, et seq. and all other Terms and Conditions noted in this Grant Agreement. Failure by the Grantee to comply may result in the termination of this Grant Agreement by the California Highway Patrol (hereafter referred to as State). The State will have no obligation to reimburse the Grantee for any additional costs once the Grant Agreement has been terminated.

A. EXECUTION

1. The State (the California Highway Patrol) hereby awards, to the Grantee, the sum of money stated on page one of this Grant Agreement. This funding is awarded to the Grantee to carry out the Project set forth in the Project Description and the terms and conditions set forth in this Grant Agreement.

2. The funding for this Grant Agreement is allocated pursuant to California Revenue and Taxation Code Section 34019(f)(3)(B). The Grantee agrees that the State's obligation to pay any sum under this Grant Agreement is contingent upon availability of funds disbursed from the California Cannabis Tax Fund to the State. If there is insufficient funding, the State shall have the option to either: 1) terminate this Grant Agreement; whereby, no party shall have any further obligations or liabilities under this Grant Agreement, or 2) negotiate a Grant Agreement Amendment to reduce the grant award and scope of work to be provided under this Grant Agreement.

3. The Grantee is not to commence or proceed with any work in advance of receiving notice that the Grant Agreement is approved. Any work performed by the Grantee in advance of the date of approval by the State shall be deemed volunteer work and will not be reimbursed by the State.

4. The Grantee agrees to provide any additional funding, beyond what the State has agreed to provide, pursuant to this Grant Agreement, and necessary to complete or carry out the Project, as described in this Grant Agreement. Any modification or alteration of this Grant Agreement, as set forth in the Grant Application submitted by the Grantee and on file with the State, must be submitted in writing thirty (30) calendar days in advance to the State for approval.

5. The Grantee agrees to complete the Project within the timeframe indicated in the Project Performance Period, which is on page one of this Grant Agreement.

B. PROJECT ADMINISTRATION

1. The Grantee shall submit all reimbursements, progress, performance, and/or other required reports concerning the status of work performed in furtherance of this Grant Agreement on a quarterly basis, or as requested by the State.

2. The Grantee shall provide the State with a final report showing all Project expenditures, which includes all State and any other Project funding expended, within sixty (60) calendar days after completion of this Grant Agreement.

3. The Grantee shall ensure all equipment which is purchased, maintained, operated, and/or developed is available for inspection by the State.

4. Equipment purchased through this Grant Agreement shall be used for the education, prevention, and enforcement of impaired driving laws, unless the Grantee is funding a portion of the purchased price not dedicated to impaired driving and that portion is not part of the Project costs. Equipment purchased under this Grant Agreement must only be used for approved Project-related purposes, unless otherwise approved by the State in writing.

5. Prior to disposition of equipment acquired under this Grant Agreement, the Grantee shall notify the State via e-mail, and by telephone, by calling the California Highway Patrol, Impaired Driving Section, Cannabis Grants Unit at (916) 843-4360.

TERMS AND CONDITIONS

C. PROJECT TERMINATION

1. Grantee or the State may terminate this Grant Agreement at any time prior to the commencement of the Project. Once the Project has commenced, this Grant Agreement may only be terminated if the party withdrawing provides thirty (30) calendar days written notice of their intent to withdraw.

    a. If by reason of force majeure the performance hereunder is delayed or prevented, then the term end date may be extended by mutual consent for the same amount of time of such delay or prevention. The term “force majeure” shall mean any fire, flood, earthquake, or public disaster, strike, labor dispute or unrest, embargo, riot, war, insurrection or civil unrest, any act of God, any act of legally constituted authority, or any other cause beyond the Grantee’s control which would excuse the Grantee’s performance as a matter of law.

    b. Grantee agrees to provide written notice of an event of force majeure under this Grant Agreement within ten (10) calendar days of the commencement of such event, and within ten (10) calendar days after the termination of such event, unless the force majeure prohibits Grantee from reasonably giving notice within this period. Grantee will give such notice at the earliest possible time following the event of force majeure.

2. Any violations of law committed by the Grantee, misrepresentations of Project information by the Grantee to the State, submission of falsified documents by the Grantee to the State, or failure to provide records by the Grantee to the State when requested for audit or site visit purposes may be cause for termination. If the Project is terminated for the reasons described in this paragraph, the State will have no obligation to reimburse the Grantee for any additional costs once the Grant Agreement has been terminated.

3. The State may terminate this Grant Agreement and be relieved of any payments should the Grantee fail to perform the requirements of this Grant Agreement at the time and in the manner herein provided. Furthermore, the Grantee, upon termination, shall return grant funds not expended by the Grantee as of the date of termination.

4. If this Grant Agreement is terminated, the State may choose to exclude the Grantee from future Grant Opportunities.

D. FINANCIAL RECORDS

1. The Grantee agrees the State, or their designated representative, shall have the right to review and to copy all records and supporting documentation pertaining to the performance of this Grant Agreement. Grantee agrees to maintain such records for possible audit for a minimum of five (5) years after final payment, unless a longer period of records retention is stipulated or required by law. Grantee agrees to allow the auditor(s) access to such records during normal business hours and to allow interviews of any employees who might reasonably have information related to such records. Furthermore, the Grantee agrees to include a similar right for the State to audit all records and interview staff in any subcontract related to performance of this Grant Agreement.

E. HOLD HARMLESS

1. The Grantee agrees to indemnify, defend, and save harmless the State, its officials, agents and employees from any and all claims and losses accruing or resulting to any and all Grantee’s staff, contractors, subcontractors, suppliers, and other person, firm or corporation furnishing or supplying work services, materials, or supplies in connection with the performance of this Grant Agreement, and from any and all claims and losses accruing or resulting to any person, agency, firm, corporation who may be injured or damaged by the Grantee in performance of this Grant Agreement.

TERMS AND CONDITIONS

F. NONDISCRIMINATION

1. The Grantee agrees to comply with State and federal laws outlawing discrimination, including, but not limited to, those prohibiting discrimination because of sex, race, color, ancestry, religion, creed, national origin, physical disability (including HIV and AIDS), mental disability, medical condition (including cancer or genetic characteristics), sexual orientation, political affiliation, position in a labor dispute, age, marital status, and denial of statutorily-required employment-related leave. (GC 12990 [a-f] and CCR, Title 2, Section 8103.)

G. AMERICANS WITH DISABILITIES ACT

1. The Grantee assures the State it complies with the Americans with Disabilities Act (ADA) of 1990, which prohibits discrimination on the basis of disability, as well as all applicable regulations and guidelines issued pursuant to the ADA. (42 U.S.C. 12101 et seq.)

H. DRUG-FREE WORKPLACE

1. The Grantee shall comply with the requirements of the Drug-Free Workplace Act of 1990 and will provide a drug-free workplace by taking the following actions:

   a. Publish a statement notifying employees that unlawful manufacture, distribution, dispensation, possession, or use of a controlled substance is prohibited and specifying actions to be taken against employees for violations.

   b. Establish a Drug-Free Awareness Program to inform employees about:

      i. The dangers of drug abuse in the workplace.

      ii. The person's or Organization/Agency's policy of maintaining a drug-free workplace.

      iii. Any available counseling, rehabilitation, and employee assistance programs.

      iv. Penalties that may be imposed upon employees for drug abuse violations.

   c. Every employee who works on the Project will:

      i. Receive a copy of the company's drug-free workplace policy statement.

      ii. Agree to abide by the terms of the company's statement as a condition of employment on the Grant Agreement.

2. Failure to comply with these requirements may result in suspension of payments under this Grant Agreement, or termination of this Grant Agreement, or both, and Grantee may be ineligible for award of any future Grant Agreements if the department determines that any of the following has occurred:

   a. The Grantee has made false certification or violated the certification by failing to carry out the requirements, as noted above. (GC 8350 et seq.)

I. LAW ENFORCEMENT AGENCIES

1. All law enforcement Organization/Agency/Agency Grantees shall comply with California law regarding racial profiling. Specifically, law enforcement Organization/Agency/Agency Grantees shall not engage in the act of racial profiling, as defined in California Penal Code Section 13519.4.

TERMS AND CONDITIONS

J. LABOR CODE/WORKERS' COMPENSATION

1. The Grantee is advised and made aware of the provisions which require every employer to be insured against liability for Worker's Compensation or to undertake self-insurance in accordance with the provisions, and Grantee affirms to comply with such provisions before commencing the performance of the work of this Grant Agreement, (refer to Labor Code Section 3700).

K. GRANT APPLICATION INCORPORATION

1. The Grantee agrees the Grant Application and any subsequent changes or additions approved or required by the State is hereby incorporated into this Grant Agreement.

L. STATE LOBBYING

1. The Grantee is advised that none of the funds provided under this Grant Agreement may be used for any activity specifically designed to urge or influence a state or local legislator to favor or oppose the adoption of any specific legislative proposal pending before any state or local legislative body. Such activities include both direct and indirect (e.g., “grassroots”) lobbying activities, with one exception. This does not preclude a state official, whose salary is supported by this Grant Agreement, from engaging in direct communications with the state or local legislative officials, in accordance with customary state and/or local practice.

M. REPRESENTATION AND WARRANTIES

1. The Grantee represents and warrants that:

    a. It is validly existing and in good standing under the laws of the State of California, has, or will have the requisite power, authority, licenses, permits, and the like necessary to carry on its business as it is now being conducted and as contemplated in this Grant Agreement, and will, at all times, lawfully conduct its business in compliance with all applicable federal, state, and local laws, regulations, and rules.

    b. It is not a party to any Grant Agreement, written or oral, creating obligations that would prevent it from entering into this Grant Agreement or satisfying the terms herein.

    c. If the Grantee is a Nonprofit Organization/Agency, it will maintain its “Active” status with the California Secretary of State, maintain its “Current” status with the California Attorney General’s Registry of Charitable Trusts, and maintain its federal and State of California tax-exempt status. If the Grantee subcontracts with a Nonprofit as part of this Grant Agreement, the Grantee shall ensure the Nonprofit will maintain its “Active” status with the California Secretary of State, maintain its “Current” status with the California Attorney General’s Registry of Charitable Trusts, and maintain its federal and State of California tax-exempt status.

    d. All of the information in its Grant Application and all materials submitted are true and accurate.

N. AIR OR WATER POLLUTION VIOLATION

1. Under the state laws, the Grantee shall not be: (1) in violation of any order or resolution not subject to review promulgated by the State Air Resources Board or an air pollution control district; (2) subject to cease and desist order not subject to review issued pursuant to Section 13301 of the Water Code for violation of waste discharge requirements or discharge prohibitions; or (3) finally determined to be in violation of provisions of federal law relating to air or water pollution.

TERMS AND CONDITIONS

O. GRANTEE NAME CHANGE

1. Grantee agrees to immediately inform the State, in writing, of any changes to the name of the person within the Organization/Agency/Agency with delegated signing authority.

2. An Amendment is required to change the Grantee's name, as listed on this Grant Agreement. Upon receipt of legal documentation of the name change, the State will process the Amendment. Payment of invoices presented with a new name cannot be paid prior to approval of said Amendment.

P. RESOLUTION

1. A county, city, district, or other local public body shall provide the State with a copy of a resolution, order, motion, or ordinance of the local governing body, which by law, has authority to enter into a Grant Agreement, authorizing execution of the Grant Agreement.

Q. PAYEE DATA RECORD FORM STD. 204

1. This form shall be completed by all non-governmental Grantees.

R. FINANCIAL INFORMATION SYSTEM FOR CALIFORNIA GOVERNMENT AGENCY TAXPAYER ID FORM

1. This form shall be completed by all Grantees.

S. CONFLICT OF INTEREST

1. This section serves to make the Grantee aware of specific provisions related to current or former state employees. If Grantee has any questions regarding the status of any person rendering services or involved with the Grant Agreement, the Grantee shall contact the State (California Highway Patrol, Impaired Driving Section, Cannabis Grants Unit) immediately for clarification.

2. Current State Employees:

   a. No officer or employee shall engage in any employment, activity, or enterprise, from which the officer or employee receives compensation or has a financial interest, and which is sponsored or funded by any state agency, unless the employment, activity, or enterprise is required, as a condition of regular state employment.

   b. No officer or employee shall contract on their own behalf, as an independent Grantee, with any state agency to provide goods or services.

3. Former State Employees:

   a. For the two-year period from the date they left state employment, no former state officer or employee may enter into a contract in which they engaged in any of the negotiations, transactions, planning, arrangements, or any part of the decision-making process relevant to this Grant Agreement while employed in any capacity by any state agency.

   b. For the 12-month period from the date they left state employment, no former state officer or employee may enter into a contract with any state agency if they were employed by that state agency in a policy-making position in the same general subject area as the proposed Grant Agreement within the 12-month period prior to their leaving state service.

4. The authorized representative of the Grantee Organization/Agency, named within this Grant Agreement, warrants their Organization/Agency and its employees have no personal or financial interest and no present or past employment or activity, which would be incompatible with

participating in any activity related to this Grant Agreement. For the duration of this Grant Agreement, the Organization/Agency and its employees will not accept any gift, benefit, gratuity or consideration, or begin a personal or financial interest in a party who is associated with this Grant Agreement.

5. The Grantee Organization/Agency and its employees shall not disclose any financial, statistical, personal, technical, media-related, and/or other information or data derived from this Grant Agreement, made available for use by the State, for the purposes of providing services to the State, in conjunction with this Grant Agreement, except as otherwise required by law or explicitly permitted by the State in writing. The Grantee shall immediately advise the State of any person(s) who has access to confidential Project information and intends to disclose that information in violation of this Grant Agreement.

6. The Grantee will not enter into any Grant Agreement or discussions with third parties concerning materials described in paragraph five (5) prior to receiving written confirmation from the State that such third party has a Grant Agreement with the State, similar in nature to this one.

7. The Grantee warrants that only those employees who are authorized and required to use the materials described in paragraph 5 will have access to them.

8. If the Grantee violates any provisions in the above paragraphs, such action by the Grantee shall render this Grant Agreement void.

T. EQUIPMENT-USE TERMS

1. The Grantee agrees any equipment purchased under this Grant Agreement shall be used for impaired driving efforts.

2. Law Enforcement Projects:

   a. Oral Fluid Drug Screening Devices and Cannabis/Marijuana Breath Testing Equipment - The Grantee agrees to ensure all personnel using road-side drug testing equipment, including oral fluid drug testing devices and/or cannabis/marijuana breath testing devices, purchased with grant funds from this Grant Agreement, are trained to recognize alcohol and drug impairment. At a minimum, personnel using these devices should receive Standardized Field Sobriety Testing training. These personnel are also encouraged to attend Advanced Roadside Impaired Driving Enforcement and Drug Recognition Evaluator training. Prior to using these devices, the Grantee agrees to obtain permission from their local prosecutor's office, establish a policy ensuring appropriate use, and require the staff using these devices to receive appropriate training, which may include training from the manufacturer. This will help ensure the equipment is used appropriately. The Grantee shall advise the State (California Highway Patrol, Impaired Driving Section, Cannabis Grants Unit) of any legal challenges or other items of significance that may affect the use or legal acceptance of these devices. Additionally, the State may request additional information about the performance of these devices, including information about their use, accuracy, and feedback from personnel using the devices.

   b. Law Enforcement Vehicles – The Grantee agrees any law enforcement vehicles purchased with Grant funds, from this Grant Agreement, will be primarily used for the enforcement of driving under the influence laws and/or providing public education, related to the dangers of driving under the influence. Additionally, any vehicle purchased using funds from this Grant Agreement shall comply with all California Vehicle Code and California Code of Regulation requirements. The State may require the Grantee to mark these vehicles with a decal and/or emblem, indicating the vehicle is used for driving under the influence enforcement.

Schedule A

Soledad Police Department

All grant awards, including any adjustments to requested funding, were made by the Cannabis Grants Unit based on the merits of the Grant Application, scale of operation, and in accordance with the Request for Application (RFA) requirements and associated regulations. As a result, not all Project activities and items detailed in Schedule A are applicable. Refer to Schedule B - Detailed Budget Estimate for approved Budget line items and Project activities. Project activities and items that are not clearly identified/specified in the Grant Agreement must be submitted to and approved by CGU prior to purchase.

Project Description

The Soledad Police Department plans to use the fund for enforcement efforts in combating driving impairment for under the influence of marijuana. Officers will also conduct DUI checkpoints and School presentation to maintain a high visibility and educational efforts for the community.

Problem Statement & Proposed Solution

With the increasing number of marijuana consumption in the state, it is imperative that local law enforcement continue the efforts in combatting Marijuana DUI enforcement. According to the 2022 ANNUAL REPORT OF THE CALIFORNIA DUI MANAGEMENT INFORMATION SYSTEM, there has been a significant increase in DUI arrest, to include drug DUI.

The Soledad Police Department is committed in the safety of the citizens and work diligently to ensure the violators are stopped, cited or arrested. The Soledad Police Department will be conducting 16 directed traffic enforcements targeting DUI of Marijuana or other narcotics to ensure the safety of the community and the motoring public. The Soledad Traffic Division will be conducting DUI checkpoints 5-6 times a year to demonstrate to the public we are taking a positive role int the enforcement of safe driving and prosecution of violators.

Performance Measures/Scope of Work

- 16 DUI Saturation Patrols (Q1=4, Q2=4, Q3=4, Q4=4). The aim is to reduce DUI/DUID deaths by 10%, which will improve safety in the community.
- 4 DUI Checkpoints (Q1=1, Q2=1, Q3=1, Q4=1) The aim is to reduce DUI/DUID by 15%, which reduce the number of impaired drivers in the community.
- ARIDE Training (Q1=1, Q2=1, Q3=1, Q4=1) The aim is to send 1 officer per quarter.
- DPREP Checkpoint Planning (Q1=1, Q2=1, Q3=1, Q4=1) The aim is to send 1 officer per quarter.
- DRE Certification (Q1=1, Q2=1, Q3=1, Q4=1) The aim is to send 1 officer per quarter.
- DUI Enforcement Supplies (Q1=1, Q2=1, Q3=1, Q4=1) The aim is to purchase supplies as needed per quarter before any enforcement operations.
- 1 Message boards for DUI checkpoints and Educational safety messages (Q1=Purchase, Q2=Receive, Q2-4= Use to completed the DUI checkpoints and education). We will use the message boards to notify the community of an approaching DUI checkpoint and make public notifications and reminders regarding safety.
- 6 Educational Presentations at local high school (Q1=1, Q2=1, Q3=1, Q4=1). The aim is to contact at least 50 students each quarter to increase awareness of DUI. The presentations will educate students on the implications and consequences of impaired driving.

Project Performance Evaluation

Soledad Police Department statistical data sheets will be created and used to show effectiveness and capture quantitative/qualitative data.

Program Sustainability

Through statistical data, it will be presented to the city counsel and city administrators. This will assist in incorporating future funding for enforcement efforts without the assistance of grant funding. The grant will demonstrate the statistical date and progress within the first year of the grant funding.

Administrative Support

The Soledad Police Department is comprised of the following command structure:

- 1 Chief of Police
- 1 Deputy Chief of Police

Schedule A

- 5 Police Sergeants
- 5 Police Officers
- 1 Records Supervisor
- 1 Records Staff
- 1 Property/Evidence Supervisor

The Soledad Police Department has obtained grants in the past by the Chief of Police and Training Sergeant.

Schedule B

Detailed Budget Estimate

Award Number	Organization/Agency	Total Amount
17950	Soledad Police Department	$100,000.00

Cost Category	Line Item Name	Total Cost to Grant
Other Direct Costs		
	PAS Devices	$1,000.00
	Oral Fluid Drug Tester	$5,500.00
	DUI Checkpoint - Supplies	$6,340.00
Category Sub-Total		**$12,840.00**
Personnel		
	Collaborative DUI Saturation Patrol	$5,000.00
	DUI Checkpoint	$12,000.00
	DUI Saturation Patrol	$20,160.00
	Presentations	$3,000.00
Category Sub-Total		**$40,160.00**
Travel		
	DPREP Checkpoint Training - Attend Travel	$5,000.00
	ARIDE Training - Attend Travel	$10,000.00
	DRE Training - Attend Travel	$10,000.00
Category Sub-Total		**$25,000.00**
Equipment		
	Message Board	$22,000.00
Category Sub-Total		**$22,000.00**

Grant Total	**$100,000.00**

Schedule B-1
Budget Narrative

Soledad Police Department

Prior to engaging in grant-funded Saturation Patrols, DUI Checkpoints, or other enforcement activities in areas where the grantee does not have primary traffic jurisdiction, the grantee should consult with the agency having primary traffic jurisdiction.

Other Direct Costs

PAS Devices
$1,000.00
(2) Alco-Sensor IV

Oral Fluid Drug Tester
$5,500.00
Drug Test Machine

DUI Checkpoint - Supplies
$6,340.00

- 150 Traffic cones
- Stream light Rechargeable flash light $139.99 each /for 10 officers
- Traffic Safety Vest- 10 Yellow reflective traffic vests $180 each for 10 officers

Personnel

Collaborative DUI Saturation Patrol
$5,000.00
4 DUI Saturation Patrols = $9,600
2 Officers per patrol / Officer = OT $100 per hour 6 hours per patrol / 80 hours per Officer / 160 hours

Presentations
$3,000.00
6 School Presentations = $9,600 2 Officers per presentation / Officer = OT $100 per hour 2 hours per presentation / 8 hours per Officer

DUI Saturation Patrol
$20,160.00
16 DUI Saturation Patrols = $9,600
2 Officers per patrol / Officer = OT $100 per hour 6 hours per patrol / 80 hours per Officer / 160 hours

DUI Checkpoint
$12,000.00
4 DUI Checkpoints = $9,600
6 Officers per Checkpoint / Officer = OT $100 per hour
6 hours per checkpoint / 80 hours per Officer / 160 hours

Travel

DPREP Checkpoint Training - Attend Travel
$5,000.00
Checkpoint Training = $616 Sacramento, CA
2 Officers Mileage = $30 each way / 2 ways = $60 Per diem = $59 per day / 5 days = $236
Lodging = $145 per night + taxes / 1 night = $320

DRE Training - Attend Travel
$10,000.00
DRE Training = $616 San Diego, CA
2 Officers Mileage = $30 each way / 2 ways = $60 Per diem = $59 per day / 5 days = $236
Lodging = $145 per night + taxes / 1 night = $320

ARIDE Training - Attend Travel
$10,000.00
SFST Training = $616 Sacramento, CA
4 Officers Mileage = $30 each way / 2 ways = $60 Per diem = $59 per day / 5 days = $236
Lodging = $145 per night + taxes / 1 night = $320

Equipment

Message Board
$22,000.00
Electronic Message Board

State of California – Transportation Agency

GAVIN NEWSOM, Governor

DEPARTMENT OF CALIFORNIA HIGHWAY PATROL
601 North 7th Street
Sacramento, CA 95811
(916) 843-4360
(800) 735-2929 (TT/TDD)
(800) 735-2922 (Voice)

June 6, 2024

File No.: 060.15426.17369

Jesus Contreras
Soledad Police Department
236 Main Street
Soledad, CA 93960

Dear Mr. Contreras:

On behalf of the California Highway Patrol (CHP), it is my pleasure to inform you, the Soledad Police Department, is conditionally approved for Cannabis Tax Fund Grant Program (CTFGP) funding in the amount of $100,000.00. The purpose of this grant funding is to help your agency reduce and mitigate the impacts of impaired driving in your community.

The official Grant Agreement for signature is forthcoming. In order to execute your Grant Agreement, please provide documentation from a local governing body, authorizing your organization to receive this grant funding, to the Cannabis Grants Unit, by email at CGUGrants@chp.ca.gov, as soon as possible. Refer to California Code of Regulations Title 13, Division 2, Chapter 13, Section 1890.13(g) for additional information.

The CHP looks forward to partnering with you and your agency on this project in an effort to make California's roadways a safer place to travel. If you have any questions, please feel free to contact the Cannabis Grants Unit at (916) 843-4360.

Sincerely,

K. M. DAVIS, Chief
Enforcement and Planning Division

State of California
Financial Information System for California (FI$Cal)

GOVERNMENT AGENCY TAXPAYER ID FORM

2000 Evergreen Street, Suite 215
Sacramento, CA 95815
www.fiscal.ca.gov
1-855-347-2250

FI$Cal
Financial Information System for California

The principal purpose of the information provided is to establish the unique identification of the government entity.

Instructions: You may submit one form for the principal government agency and all subsidiaries sharing the same TIN. Subsidiaries with a different TIN must submit a separate form. Fields marked with an asterisk (*) are required. Hover over fields to view help information. Please print the form to sign prior to submittal. You may email the form to: vendors@fiscal.ca.gov, or fax it to (916) 576-5200, or mail it to the address above.

Principal Government Agency Name*: Soledad Police Department

Remit-To Address (Street or PO Box)*: 236 Main Street

City*: Soledad State *: CA Zip Code*+4: 93960

Government Type:
- [x] City
- [ ] County
- [ ] Special District
- [ ] Federal
- [ ] Other (Specify)

Federal Employer Identification Number (FEIN)*: 94-6000432

List other subsidiary Departments, Divisions or Units under your principal agency's jurisdiction who share the same FEIN and receives payment from the State of California.

Dept/Division/Unit Name	Complete Address
Soledad City Hall	248 Main Street Soledad, Ca 93960

Contact Person*: Damon Wasson Title: Chief of Police

Phone number*: 831-223-5141 E-mail address: damon.wasson@cityofsoledad.gov

Signature*: Date: 7/30/2024

State of California
DEPARTMENT OF CALIFORNIA HIGHWAY PATROL
GRANT AGREEMENT - Page 1

Award Number
17950

1. GRANT TITLE
FY24/25 CTFGP Law Enforcement - Soledad Police Department

2. NAME OF ORGANIZATION/AGENCY
Soledad Police Department

3. ORGANIZATION/AGENCY SECTION TO ADMINISTER GRANT
Soledad Police Department

4. PROJECT PERFORMANCE PERIOD
From: 07/01/2024 To: 06/30/2025

5. PURCHASE ORDER NUMBER

6. GRANT OPPORTUNITY INFORMATION DESCRIPTION
Law Enforcement grants provide financial assistance to allied agencies for the education, prevention, and the enforcement of laws related to driving under the influence of alcohol and other drugs, including cannabis and cannabis products.
The intent of the program is to educate the public regarding the dangers of impaired driving, enforce impaired driving laws on the roadway, and improve the Organization/Agency's effectiveness through training and development of new strategies.

7. FUNDS ALLOCATED UNDER THIS GRANT AGREEMENT SHALL NOT EXCEED $100,000.00

8. TERMS AND CONDITIONS
The Grantee agrees to complete the Project, as described in the Project Description. The Grantee's Grant Application, and the California Code of Regulations, Title 13, Division 2, Chapter 13, Sections 1890.00-1890.27, are hereby incorporated into this Grant Agreement by reference.

The parties hereto agree to comply with the Terms and Conditions of the following attachments:

- Schedule A – Project Description, Problem Statement, Goals and Objectives, and Method of Procedure
- Schedule B – Detailed Budget Estimate
- Schedule B-1 – Budget Narrative

We, the officials named below, hereby swear, under penalty of perjury under the laws of the State of California, that we are duly authorized to legally bind the Grant recipient to the above-described Grant Terms and Conditions.

IN WITNESS WHEREOF, this Grant Agreement is executed by the parties hereto.

9. APPROVAL SIGNATURES

A. AUTHORIZED OFFICIAL OF ORGANIZATION/AGENCY
Name: Damon Wasson
Title: Chief Of Police
Phone: (831) 674-5562

Address: 236 Main Street
Soledad, CA 93960

E-Mail: damon.wasson@cityofsoledad.gov

Damon Wasson Digitally signed by Damon Wasson Date: 2024.07.30 09:50:51 -07'00' — 07/30/24
(Signature) (Date)

B. AUTHORIZED OFFICIAL OF CHP
Name: Andrew Beasley Phone: (916) 843-4360
Title: Captain Fax: (916) 322-3169

Address: 601 North 7th Street
Sacramento, CA 95811

E-Mail: ABeasley@chp.ca.gov

(Signature) (Date)

C. ACCOUNTING OFFICER OF CHP
Name: C. M. Jones Phone: (916) 843-3531
Title: Commander Fax: (916) 322-3159

Address: 601 North 7th Street
Sacramento, CA 95811

E-Mail: Catrina.Jones@chp.ca.gov

(Signature) (Date)

10. AUTHORIZED FINANCIAL CONTACT TO RECEIVE REIMBURSEMENT PAYMENTS

Name: Mike Howard
Title: Finance Manager
Phone: (831) 674-5562

Address: 248 Main Street
Soledad Ca 93960

TERMS AND CONDITIONS

Grantee shall comply with the California Code of Regulations, Title 13, Division 2, Chapter 13 Section 1890, et seq. and all other Terms and Conditions noted in this Grant Agreement. Failure by the Grantee to comply may result in the termination of this Grant Agreement by the California Highway Patrol (hereafter referred to as State). The State will have no obligation to reimburse the Grantee for any additional costs once the Grant Agreement has been terminated.

A. EXECUTION

1. The State (the California Highway Patrol) hereby awards, to the Grantee, the sum of money stated on page one of this Grant Agreement. This funding is awarded to the Grantee to carry out the Project set forth in the Project Description and the terms and conditions set forth in this Grant Agreement.

2. The funding for this Grant Agreement is allocated pursuant to California Revenue and Taxation Code Section 34019(f)(3)(B). The Grantee agrees that the State's obligation to pay any sum under this Grant Agreement is contingent upon availability of funds disbursed from the California Cannabis Tax Fund to the State. If there is insufficient funding, the State shall have the option to either: 1) terminate this Grant Agreement; whereby, no party shall have any further obligations or liabilities under this Grant Agreement, or 2) negotiate a Grant Agreement Amendment to reduce the grant award and scope of work to be provided under this Grant Agreement.

3. The Grantee is not to commence or proceed with any work in advance of receiving notice that the Grant Agreement is approved. Any work performed by the Grantee in advance of the date of approval by the State shall be deemed volunteer work and will not be reimbursed by the State.

4. The Grantee agrees to provide any additional funding, beyond what the State has agreed to provide, pursuant to this Grant Agreement, and necessary to complete or carry out the Project, as described in this Grant Agreement. Any modification or alteration of this Grant Agreement, as set forth in the Grant Application submitted by the Grantee and on file with the State, must be submitted in writing thirty (30) calendar days in advance to the State for approval.

5. The Grantee agrees to complete the Project within the timeframe indicated in the Project Performance Period, which is on page one of this Grant Agreement.

B. PROJECT ADMINISTRATION

1. The Grantee shall submit all reimbursements, progress, performance, and/or other required reports concerning the status of work performed in furtherance of this Grant Agreement on a quarterly basis, or as requested by the State.

2. The Grantee shall provide the State with a final report showing all Project expenditures, which includes all State and any other Project funding expended, within sixty (60) calendar days after completion of this Grant Agreement.

3. The Grantee shall ensure all equipment which is purchased, maintained, operated, and/or developed is available for inspection by the State.

4. Equipment purchased through this Grant Agreement shall be used for the education, prevention, and enforcement of impaired driving laws, unless the Grantee is funding a portion of the purchased price not dedicated to impaired driving and that portion is not part of the Project costs. Equipment purchased under this Grant Agreement must only be used for approved Project-related purposes, unless otherwise approved by the State in writing.

5. Prior to disposition of equipment acquired under this Grant Agreement, the Grantee shall notify the State via e-mail, and by telephone, by calling the California Highway Patrol, Impaired Driving Section, Cannabis Grants Unit at (916) 843-4360.

TERMS AND CONDITIONS

C. PROJECT TERMINATION

1. Grantee or the State may terminate this Grant Agreement at any time prior to the commencement of the Project. Once the Project has commenced, this Grant Agreement may only be terminated if the party withdrawing provides thirty (30) calendar days written notice of their intent to withdraw.

    a. If by reason of force majeure the performance hereunder is delayed or prevented, then the term end date may be extended by mutual consent for the same amount of time of such delay or prevention. The term "force majeure" shall mean any fire, flood, earthquake, or public disaster, strike, labor dispute or unrest, embargo, riot, war, insurrection or civil unrest, any act of God, any act of legally constituted authority, or any other cause beyond the Grantee's control which would excuse the Grantee's performance as a matter of law.

    b. Grantee agrees to provide written notice of an event of force majeure under this Grant Agreement within ten (10) calendar days of the commencement of such event, and within ten (10) calendar days after the termination of such event, unless the force majeure prohibits Grantee from reasonably giving notice within this period. Grantee will give such notice at the earliest possible time following the event of force majeure.

2. Any violations of law committed by the Grantee, misrepresentations of Project information by the Grantee to the State, submission of falsified documents by the Grantee to the State, or failure to provide records by the Grantee to the State when requested for audit or site visit purposes may be cause for termination. If the Project is terminated for the reasons described in this paragraph, the State will have no obligation to reimburse the Grantee for any additional costs once the Grant Agreement has been terminated.

3. The State may terminate this Grant Agreement and be relieved of any payments should the Grantee fail to perform the requirements of this Grant Agreement at the time and in the manner herein provided. Furthermore, the Grantee, upon termination, shall return grant funds not expended by the Grantee as of the date of termination.

4. If this Grant Agreement is terminated, the State may choose to exclude the Grantee from future Grant Opportunities.

D. FINANCIAL RECORDS

1. The Grantee agrees the State, or their designated representative, shall have the right to review and to copy all records and supporting documentation pertaining to the performance of this Grant Agreement. Grantee agrees to maintain such records for possible audit for a minimum of five (5) years after final payment, unless a longer period of records retention is stipulated or required by law. Grantee agrees to allow the auditor(s) access to such records during normal business hours and to allow interviews of any employees who might reasonably have information related to such records. Furthermore, the Grantee agrees to include a similar right for the State to audit all records and interview staff in any subcontract related to performance of this Grant Agreement.

E. HOLD HARMLESS

1. The Grantee agrees to indemnify, defend, and save harmless the State, its officials, agents and employees from any and all claims and losses accruing or resulting to any and all Grantee's staff, contractors, subcontractors, suppliers, and other person, firm or corporation furnishing or supplying work services, materials, or supplies in connection with the performance of this Grant Agreement, and from any and all claims and losses accruing or resulting to any person, agency, firm, corporation who may be injured or damaged by the Grantee in performance of this Grant Agreement.

TERMS AND CONDITIONS

F. NONDISCRIMINATION

1. The Grantee agrees to comply with State and federal laws outlawing discrimination, including, but not limited to, those prohibiting discrimination because of sex, race, color, ancestry, religion, creed, national origin, physical disability (including HIV and AIDS), mental disability, medical condition (including cancer or genetic characteristics), sexual orientation, political affiliation, position in a labor dispute, age, marital status, and denial of statutorily-required employment-related leave. (GC 12990 [a-f] and CCR, Title 2, Section 8103.)

G. AMERICANS WITH DISABILITIES ACT

1. The Grantee assures the State it complies with the Americans with Disabilities Act (ADA) of 1990, which prohibits discrimination on the basis of disability, as well as all applicable regulations and guidelines issued pursuant to the ADA. (42 U.S.C. 12101 et seq.)

H. DRUG-FREE WORKPLACE

1. The Grantee shall comply with the requirements of the Drug-Free Workplace Act of 1990 and will provide a drug-free workplace by taking the following actions:

   a. Publish a statement notifying employees that unlawful manufacture, distribution, dispensation, possession, or use of a controlled substance is prohibited and specifying actions to be taken against employees for violations.

   b. Establish a Drug-Free Awareness Program to inform employees about:

      i. The dangers of drug abuse in the workplace.

      ii. The person's or Organization/Agency's policy of maintaining a drug-free workplace.

      iii. Any available counseling, rehabilitation, and employee assistance programs.

      iv. Penalties that may be imposed upon employees for drug abuse violations.

   c. Every employee who works on the Project will:

      i. Receive a copy of the company's drug-free workplace policy statement.

      ii. Agree to abide by the terms of the company's statement as a condition of employment on the Grant Agreement.

2. Failure to comply with these requirements may result in suspension of payments under this Grant Agreement, or termination of this Grant Agreement, or both, and Grantee may be ineligible for award of any future Grant Agreements if the department determines that any of the following has occurred:

   a. The Grantee has made false certification or violated the certification by failing to carry out the requirements, as noted above. (GC 8350 et seq.)

I. LAW ENFORCEMENT AGENCIES

1. All law enforcement Organization/Agency/Agency Grantees shall comply with California law regarding racial profiling. Specifically, law enforcement Organization/Agency/Agency Grantees shall not engage in the act of racial profiling, as defined in California Penal Code Section 13519.4.

TERMS AND CONDITIONS

J. LABOR CODE/WORKERS' COMPENSATION

1. The Grantee is advised and made aware of the provisions which require every employer to be insured against liability for Worker's Compensation or to undertake self-insurance in accordance with the provisions, and Grantee affirms to comply with such provisions before commencing the performance of the work of this Grant Agreement, (refer to Labor Code Section 3700).

K. GRANT APPLICATION INCORPORATION

1. The Grantee agrees the Grant Application and any subsequent changes or additions approved or required by the State is hereby incorporated into this Grant Agreement.

L. STATE LOBBYING

1. The Grantee is advised that none of the funds provided under this Grant Agreement may be used for any activity specifically designed to urge or influence a state or local legislator to favor or oppose the adoption of any specific legislative proposal pending before any state or local legislative body. Such activities include both direct and indirect (e.g., "grassroots") lobbying activities, with one exception. This does not preclude a state official, whose salary is supported by this Grant Agreement, from engaging in direct communications with the state or local legislative officials, in accordance with customary state and/or local practice.

M. REPRESENTATION AND WARRANTIES

1. The Grantee represents and warrants that:

   a. It is validly existing and in good standing under the laws of the State of California, has, or will have the requisite power, authority, licenses, permits, and the like necessary to carry on its business as it is now being conducted and as contemplated in this Grant Agreement, and will, at all times, lawfully conduct its business in compliance with all applicable federal, state, and local laws, regulations, and rules.

   b. It is not a party to any Grant Agreement, written or oral, creating obligations that would prevent it from entering into this Grant Agreement or satisfying the terms herein.

   c. If the Grantee is a Nonprofit Organization/Agency, it will maintain its "Active" status with the California Secretary of State, maintain its "Current" status with the California Attorney General's Registry of Charitable Trusts, and maintain its federal and State of California tax-exempt status. If the Grantee subcontracts with a Nonprofit as part of this Grant Agreement, the Grantee shall ensure the Nonprofit will maintain its "Active" status with the California Secretary of State, maintain its "Current" status with the California Attorney General's Registry of Charitable Trusts, and maintain its federal and State of California tax-exempt status.

   d. All of the information in its Grant Application and all materials submitted are true and accurate.

N. AIR OR WATER POLLUTION VIOLATION

1. Under the state laws, the Grantee shall not be: (1) in violation of any order or resolution not subject to review promulgated by the State Air Resources Board or an air pollution control district; (2) subject to cease and desist order not subject to review issued pursuant to Section 13301 of the Water Code for violation of waste discharge requirements or discharge prohibitions; or (3) finally determined to be in violation of provisions of federal law relating to air or water pollution.

TERMS AND CONDITIONS

O. GRANTEE NAME CHANGE

1. Grantee agrees to immediately inform the State, in writing, of any changes to the name of the person within the Organization/Agency/Agency with delegated signing authority.

2. An Amendment is required to change the Grantee's name, as listed on this Grant Agreement. Upon receipt of legal documentation of the name change, the State will process the Amendment. Payment of invoices presented with a new name cannot be paid prior to approval of said Amendment.

P. RESOLUTION

1. A county, city, district, or other local public body shall provide the State with a copy of a resolution, order, motion, or ordinance of the local governing body, which by law, has authority to enter into a Grant Agreement, authorizing execution of the Grant Agreement.

Q. PAYEE DATA RECORD FORM STD. 204

1. This form shall be completed by all non-governmental Grantees.

R. FINANCIAL INFORMATION SYSTEM FOR CALIFORNIA GOVERNMENT AGENCY TAXPAYER ID FORM

1. This form shall be completed by all Grantees.

S. CONFLICT OF INTEREST

1. This section serves to make the Grantee aware of specific provisions related to current or former state employees. If Grantee has any questions regarding the status of any person rendering services or involved with the Grant Agreement, the Grantee shall contact the State (California Highway Patrol, Impaired Driving Section, Cannabis Grants Unit) immediately for clarification.

2. Current State Employees:

   a. No officer or employee shall engage in any employment, activity, or enterprise, from which the officer or employee receives compensation or has a financial interest, and which is sponsored or funded by any state agency, unless the employment, activity, or enterprise is required, as a condition of regular state employment.

   b. No officer or employee shall contract on their own behalf, as an independent Grantee, with any state agency to provide goods or services.

3. Former State Employees:

   a. For the two-year period from the date they left state employment, no former state officer or employee may enter into a contract in which they engaged in any of the negotiations, transactions, planning, arrangements, or any part of the decision-making process relevant to this Grant Agreement while employed in any capacity by any state agency.

   b. For the 12-month period from the date they left state employment, no former state officer or employee may enter into a contract with any state agency if they were employed by that state agency in a policy-making position in the same general subject area as the proposed Grant Agreement within the 12-month period prior to their leaving state service.

4. The authorized representative of the Grantee Organization/Agency, named within this Grant Agreement, warrants their Organization/Agency and its employees have no personal or financial interest and no present or past employment or activity, which would be incompatible with

TERMS AND CONDITIONS

participating in any activity related to this Grant Agreement. For the duration of this Grant Agreement, the Organization/Agency and its employees will not accept any gift, benefit, gratuity or consideration, or begin a personal or financial interest in a party who is associated with this Grant Agreement.

5. The Grantee Organization/Agency and its employees shall not disclose any financial, statistical, personal, technical, media-related, and/or other information or data derived from this Grant Agreement, made available for use by the State, for the purposes of providing services to the State, in conjunction with this Grant Agreement, except as otherwise required by law or explicitly permitted by the State in writing. The Grantee shall immediately advise the State of any person(s) who has access to confidential Project information and intends to disclose that information in violation of this Grant Agreement.

6. The Grantee will not enter into any Grant Agreement or discussions with third parties concerning materials described in paragraph five (5) prior to receiving written confirmation from the State that such third party has a Grant Agreement with the State, similar in nature to this one.

7. The Grantee warrants that only those employees who are authorized and required to use the materials described in paragraph 5 will have access to them.

8. If the Grantee violates any provisions in the above paragraphs, such action by the Grantee shall render this Grant Agreement void.

T. EQUIPMENT-USE TERMS

1. The Grantee agrees any equipment purchased under this Grant Agreement shall be used for impaired driving efforts.

2. Law Enforcement Projects:

   a. Oral Fluid Drug Screening Devices and Cannabis/Marijuana Breath Testing Equipment - The Grantee agrees to ensure all personnel using road-side drug testing equipment, including oral fluid drug testing devices and/or cannabis/marijuana breath testing devices, purchased with grant funds from this Grant Agreement, are trained to recognize alcohol and drug impairment. At a minimum, personnel using these devices should receive Standardized Field Sobriety Testing training. These personnel are also encouraged to attend Advanced Roadside Impaired Driving Enforcement and Drug Recognition Evaluator training. Prior to using these devices, the Grantee agrees to obtain permission from their local prosecutor's office, establish a policy ensuring appropriate use, and require the staff using these devices to receive appropriate training, which may include training from the manufacturer. This will help ensure the equipment is used appropriately. The Grantee shall advise the State (California Highway Patrol, Impaired Driving Section, Cannabis Grants Unit) of any legal challenges or other items of significance that may affect the use or legal acceptance of these devices. Additionally, the State may request additional information about the performance of these devices, including information about their use, accuracy, and feedback from personnel using the devices.

   b. Law Enforcement Vehicles – The Grantee agrees any law enforcement vehicles purchased with Grant funds, from this Grant Agreement, will be primarily used for the enforcement of driving under the influence laws and/or providing public education, related to the dangers of driving under the influence. Additionally, any vehicle purchased using funds from this Grant Agreement shall comply with all California Vehicle Code and California Code of Regulation requirements. The State may require the Grantee to mark these vehicles with a decal and/or emblem, indicating the vehicle is used for driving under the influence enforcement.

Schedule A

Soledad Police Department

All grant awards, including any adjustments to requested funding, were made by the Cannabis Grants Unit based on the merits of the Grant Application, scale of operation, and in accordance with the Request for Application (RFA) requirements and associated regulations. As a result, not all Project activities and items detailed in Schedule A are applicable. Refer to Schedule B - Detailed Budget Estimate for approved Budget line items and Project activities. Project activities and items that are not clearly identified/specified in the Grant Agreement must be submitted to and approved by CGU prior to purchase.

Project Description

The Soledad Police Department plans to use the fund for enforcement efforts in combating driving impairment for under the influence of marijuana. Officers will also conduct DUI checkpoints and School presentation to maintain a high visibility and educational efforts for the community.

Problem Statement & Proposed Solution

With the increasing number of marijuana consumption in the state, it is imperative that local law enforcement continue the efforts in combatting Marijuana DUI enforcement. According to the 2022 ANNUAL REPORT OF THE CALIFORNIA DUI MANAGEMENT INFORMATION SYSTEM, there has been a significant increase in DUI arrest, to include drug DUI.

The Soledad Police Department is committed in the safety of the citizens and work diligently to ensure the violators are stopped, cited or arrested. The Soledad Police Department will be conducting 16 directed traffic enforcements targeting DUI of Marijuana or other narcotics to ensure the safety of the community and the motoring public. The Soledad Traffic Division will be conducting DUI checkpoints 5-6 times a year to demonstrate to the public we are taking a positive role int the enforcement of safe driving and prosecution of violators.

Performance Measures/Scope of Work

- 16 DUI Saturation Patrols (Q1=4, Q2=4, Q3=4, Q4=4). The aim is to reduce DUI/DUID deaths by 10%, which will improve safety in the community.
- 4 DUI Checkpoints (Q1=1, Q2=1, Q3=1, Q4=1) The aim is to reduce DUI/DUID by 15%, which reduce the number of impaired drivers in the community.
- ARIDE Training (Q1=1, Q2=1, Q3=1, Q4=1) The aim is to send 1 officer per quarter.
- DPREP Checkpoint Planning (Q1=1, Q2=1, Q3=1, Q4=1) The aim is to send 1 officer per quarter.
- DRE Certification (Q1=1, Q2=1, Q3=1, Q4=1) The aim is to send 1 officer per quarter.
- DUI Enforcement Supplies (Q1=1, Q2=1, Q3=1, Q4=1) The aim is to purchase supplies as needed per quarter before any enforcement operations.
- 1 Message boards for DUI checkpoints and Educational safety messages (Q1=Purchase, Q2=Receive, Q2-4= Use to completed the DUI checkpoints and education). We will use the message boards to notify the community of an approaching DUI checkpoint and make public notifications and reminders regarding safety.
- 6 Educational Presentations at local high school (Q1=1, Q2=1, Q3=1, Q4=1). The aim is to contact at least 50 students each quarter to increase awareness of DUI. The presentations will educate students on the implications and consequences of impaired driving.

Project Performance Evaluation

Soledad Police Department statistical data sheets will be created and used to show effectiveness and capture quantitative/qualitative data.

Program Sustainability

Through statistical data, it will be presented to the city counsel and city administrators. This will assist in incorporating future funding for enforcement efforts without the assistance of grant funding. The grant will demonstrate the statistical date and progress within the first year of the grant funding.

Administrative Support

The Soledad Police Department is comprised of the following command structure:

- 1 Chief of Police
- 1 Deputy Chief of Police

Schedule A

- 5 Police Sergeants
- 5 Police Officers
- 1 Records Supervisor
- 1 Records Staff
- 1 Property/Evidence Supervisor

The Soledad Police Department has obtained grants in the past by the Chief of Police and Training Sergeant.

Schedule B

Detailed Budget Estimate

Award Number	Organization/Agency	Total Amount
17950	Soledad Police Department	$100,000.00

Cost Category	Line Item Name	Total Cost to Grant
Other Direct Costs		
	PAS Devices	$1,000.00
	Oral Fluid Drug Tester	$5,500.00
	DUI Checkpoint - Supplies	$6,340.00
Category Sub-Total		**$12,840.00**
Personnel		
	Collaborative DUI Saturation Patrol	$5,000.00
	DUI Checkpoint	$12,000.00
	DUI Saturation Patrol	$20,160.00
	Presentations	$3,000.00
Category Sub-Total		**$40,160.00**
Travel		
	DPREP Checkpoint Training - Attend Travel	$5,000.00
	ARIDE Training - Attend Travel	$10,000.00
	DRE Training - Attend Travel	$10,000.00
Category Sub-Total		**$25,000.00**
Equipment		
	Message Board	$22,000.00
Category Sub-Total		**$22,000.00**

Grant Total	**$100,000.00**

Schedule B-1
Budget Narrative

Soledad Police Department

Prior to engaging in grant-funded Saturation Patrols, DUI Checkpoints, or other enforcement activities in areas where the grantee does not have primary traffic jurisdiction, the grantee should consult with the agency having primary traffic jurisdiction.

Other Direct Costs

PAS Devices
$1,000.00
(2) Alco-Sensor IV

Oral Fluid Drug Tester
$5,500.00
Drug Test Machine

DUI Checkpoint - Supplies
$6,340.00

- 150 Traffic cones
- Stream light Rechargeable flash light $139.99 each /for 10 officers
- Traffic Safety Vest- 10 Yellow reflective traffic vests $180 each for 10 officers

Personnel

Collaborative DUI Saturation Patrol
$5,000.00
4 DUI Saturation Patrols = $9,600
2 Officers per patrol / Officer = OT $100 per hour 6 hours per patrol / 80 hours per Officer / 160 hours

Presentations
$3,000.00
6 School Presentations = $9,600 2 Officers per presentation / Officer = OT $100 per hour 2 hours per presentation / 8 hours per Officer

DUI Saturation Patrol
$20,160.00
16 DUI Saturation Patrols = $9,600
2 Officers per patrol / Officer = OT $100 per hour 6 hours per patrol / 80 hours per Officer / 160 hours

DUI Checkpoint
$12,000.00
4 DUI Checkpoints = $9,600
6 Officers per Checkpoint / Officer = OT $100 per hour
6 hours per checkpoint / 80 hours per Officer / 160 hours

Travel

DPREP Checkpoint Training - Attend Travel
$5,000.00
Checkpoint Training = $616 Sacramento, CA
2 Officers Mileage = $30 each way / 2 ways = $60 Per diem = $59 per day / 5 days = $236
Lodging = $145 per night + taxes / 1 night = $320

DRE Training - Attend Travel
$10,000.00
DRE Training = $616 San Diego, CA
2 Officers Mileage = $30 each way / 2 ways = $60 Per diem = $59 per day / 5 days = $236
Lodging = $145 per night + taxes / 1 night = $320

ARIDE Training - Attend Travel
$10,000.00
SFST Training = $616 Sacramento, CA
4 Officers Mileage = $30 each way / 2 ways = $60 Per diem = $59 per day / 5 days = $236
Lodging = $145 per night + taxes / 1 night = $320

Equipment

Message Board
$22,000.00
Electronic Message Board

Department of California Highway Patrol Cannabis Tax Fund Grant Program

Quick-Reference Guide

07.01.24

CANNABIS GRANTS UNIT

Table of Contents

IMPORTANT DATES 3
QUARTERLY REPORTING 4
Performance Plan & Achievements 4
REIMBURSEMENT REQUESTS 5
Expenses and Budget Categories 5
Personnel 5
Travel 7
Equipment 9
Consultants/Contracts 10
Other Direct Costs 11
EDUCATION AND OUTREACH 11
Education Events and Presentations 11
Outreach Materials and Advertising 12
MODIFICATIONS 12
Budget Modification Request 12
Project Contact Change Request 13
PROJECT PERFORMANCE REVIEW 13
Monitoring/Site Visits 13
CLOSEOUT 14
Achievements and Expenses 14
AUDITING 14
Requirements & Principles 14

This Quick-Reference Guide was developed to provide the California Highway Patrol's (CHP), Cannabis Grants Unit (CGU), Cannabis Tax Fund Grant Program (CTFGP) Grantees, with grant program guidance. It is not intended to replace the Terms & Conditions in your Grant Agreement, or any rules established in the program regulations. All items contained in this Quick-Reference Guide are subject to change.

Please be sure to read California Code of Regulations (CCR) (Title 13, Division 2, Chapter 13) posted on the CHP's website to ensure successful participation in the program.

IMPORTANT DATES

ONE YEAR PROJECTS

FY24-25 Quarterly Reporting and Reimbursement Request Due Dates

Quarter	Reporting Period	Due Date
Q1	July 1 – September 30	October 14, 2024
Q2	October 1 – December 31	January 14, 2025
Q3	January 1 – March 31	April 14, 2025
Q4/Closeout	April 1 – June 30	August 31, 2025

TWO YEAR PROJECTS

FY24-26 Quarterly Reporting and Reimbursement Request Due Dates

Quarter	Reporting Period	Due Date
Y1 Q1	July 1 – September 30	October 14, 2024
Y1 Q2	October 1 – December 31	January 14, 2025
Y1 Q3	January 1 – March 31	April 14, 2025
Y1 Q4	April 1 – June 30	July 14, 2025
Y2 Q1	July 1 – September 30	October 14, 2025
Y2 Q2	October 1 – December 31	January 14, 2026
Y2 Q3	January 1 – March 31	April 14, 2026
Y2 Q4/Closeout	April 1 – June 30	August 31, 2026

QUARTERLY REPORTING
Performance Plan & Achievements

Grantees are required to report quarterly on achieved Project goals and activities (referred to as Achievements within the Performance Plan in the Grant Management System) that occurred during the Reporting Period. If you are not submitting Achievements and/or Expenses during any Reporting Period, a Project Status is still required (ex: Q1 – Project Status). The Project Status provides an opportunity to tell a story about the Project as a whole, including success stories, obstacles faced, and future plans (do not repeat stats from other Achievements). Please only report on grant-funded Project activities in your current Project.

Grantees will utilize the Grant Management System (GMS = AmpliFund) to submit all quarterly Achievements by the due dates listed in this guide under "Importance Dates". Please contact your Grant Administrator if a deadline cannot be met. **CGU reserves the right to request additional information, as needed**. CGU may request the following information:

Individual Project Activity Updates
- Progress
- Completed tasks
- Additional details

Required Project Status Updates

Q1-Q3 – Project Status
- Success stories
- Obstacles faced
- Future plans

Q4 – Project Status/Closeout
- Summary of completed Project
- Success Stories
- Obstacles faced
- Project goals/activities not accomplished
- Justification for unspent grant funds

Training
- Course name
- Location
- Date(s)
- Organization/Agency or entity providing training
- Roster/Certification of Completion(s), if applicable
- Clarification/justification of hours

DUI Saturation Patrol (SP)/Checkpoint (C)
- Number of patrols (SP)
- Number of cars through (C)
- Number of stops (SP)
- Number of SFST (SP/C)
- Number of DUI/DUID Arrests (SP/C)
- Number of citations/warnings (SP)
- Number of cars screened (C)

Education and Outreach
- Event/Presentation name
- Location (in-person or virtual)
- Event/Presentation dates (must be within Project Performance Period)
- Agenda/Topics covered
- Attendance list/number of attendees
- Photos of event, presentation, and/or outreach materials

Crime Lab/Coroner's Testing
- Statistical information
- Advances in Testing
- Progress in reducing turnaround time
- Number of impaired driving deaths
- Drug Trends

REIMBURSEMENT REQUESTS
Expenses and Budget Categories

Reimbursement Requests shall not be submitted until a Grant Agreement is fully executed. A Grant Agreement is deemed fully executed when an electronically signed Grant Agreement, approved Board Resolution, and completed FI$Cal Form are on file with CGU. Once Executed, a Grant Administrator will be assigned to your Organization/Agency.

Payments are issued on a reimbursement-basis only, and payment advances are not allowed. Grantees shall submit Reimbursement Requests on a quarterly basis for approved achievements and expenses relating to the Project goals and activities that occurred during the Reporting Period through the GMS. Budget Categories for requesting reimbursement may include Personnel, Travel, Equipment, Consultants/Contracts, and/or Other Direct Costs.

In the GMS, Grantees will create one Expense line item per Project activity. Do not split one Project activity across multiple Expense line items. Reimbursement Requests must be submitted by an authorized contact of the Organization/Agency. It is the responsibility of the authorized contact to verify:

- All Reimbursement Requests are eligible.
- Amounts do not exceed the budget line-item totals.
- Expense line-items are posted to the correct Budget Category and Budget line-item.
- Supporting documentation is attached and uploaded to **each** Expense line item.

Please allow enough time for the Grant Administrator to review the submitted information to ensure a Reimbursement Request is submitted by the due date. **CGU reserves the right to request additional information, as needed.**

Note: Reimbursement Requests, consisting of Expense line-items (Budget), Achievements (Performance Plans) and supporting documentation are due within 14 calendar days of the due dates, with the exception of the fourth quarter, which is due within 60 calendar days of the due date. All due dates can be found under "Important Dates". Please contact your Grant Administrator if a deadline cannot be met.

CGU reserves the right to withhold approving and/or processing Reimbursement Requests if the Grantee is, at any time, not adhering to the statutes or regulations governing the grant program, and if the Grantee has any outstanding supporting documentation, Achievements, or Project closeouts.

Personnel

Personnel costs include direct compensation for budgeted staff time and benefits for grant-funded activities. **Services must be rendered within the Project Performance Period to receive reimbursement.**

Budgeted Staff Time

Budgeted staff time costs may include staff time worked beyond the normal established work

schedule for all employees. Overtime is reimbursable at a higher than normal rate of pay, in accordance with the Grantee's established overtime policy.

Personnel/administrative costs shall be consistent with prevailing wages for contractual services or the organizational salary scale for staff.

Backfill

Backfill costs may include an overtime rate for budgeted staff time for a qualified person to replace an employee attending a training course (ex: Drug Recognition Evaluator (DRE) Training). Training course must be specified in the Grant Agreement and approved by CGU prior to staff attending the course(s).

Benefits

Benefit costs may include employer contributions or expenses for basic health care, vacation, sick leave, retirement, social security, and/ or other similar expenses. Personnel benefit costs must be calculated in proportion to the actual time worked on the Project activity.

Supporting Documentation

Personnel supporting documentation must be an official document (ex: electronic payroll report). Personnel timesheets are not required as supporting documentation; however, they must be kept on file at your Organization/Agency and readily available for auditing purposes, in addition to the electronic payroll report. For each Project activity, please ensure the following information is provided:

- Project activity name
- Project activity date
- Employee name and classification
- Number of hours worked on Project activity
- Rate of pay (notate whether regular or overtime pay)
- Salary total (rate x hours)
- Benefits percentage
- Total for salary and benefits combined

If the official document does not include all information above, please submit a supporting spreadsheet. Example below.

Project Activity	Project Activity Date	Name and Classificaiton	Hours	OT Rate	Salary Total	Benefit %	Total Personnel Cost
DUI Saturation Patrol	08/01/23	Officer Bob Smith	5.00	$79.97	$399.85	10%	$439.84
DUI Saturation Patrol	08/01/23	Sergeant Jessica Williams	5.00	$80.00	$400.00	10%	$440.00
DUI Saturation Patrol	08/25/23	Officer John Miller	4.50	$79.97	$359.87	10%	$395.85
DUI Saturation Patrol	08/25/23	Officer Joe Adams	4.50	$82.50	$371.25	10%	$408.38
DUI Saturation Patrol	08/25/23	Officer Bob Smith	4.50	$85.46	$384.57	10%	$423.03
DUI Saturation Patrol	09/02/23	Officer Joe Adams	6.00	$80.00	$480.00	10%	$528.00
DUI Saturation Patrol	09/02/23	Sergeant Jessica Williams	6.00	$79.97	$479.82	10%	$527.80
DUI Saturation Patrol	09/02/23	Officer Bob Smith	6.00	$79.97	$479.82	10%	$527.80
DUI Saturation Patrol	09/02/23	Officer John Miller	6.00	$82.50	$495.00	10%	$544.50
						TOTAL	**$4,235.19**
SFST Training	10/23/23 - 10/25/23	Officer Bob Smith	16.00	$79.97	$1,279.52	10%	$1,407.47
SFST Training	10/23/23 - 10/25/23	Officer Joe Adams	16.00	$85.46	$1,367.36	10%	$1,504.10
SFST Training	11/06/23 - 11/08/23	Officer John Miller	16.00	$80.00	$1,280.00	10%	$1,408.00
SFST Training	11/06/23 - 11/08/23	Sergeant Jessica Williams	16.00	$82.50	$1,320.00	10%	$1,452.00
						TOTAL	**$5,771.57**

Travel

Travel costs may include in-state and out-of-state Project-related conferences, seminars, workshops, and trainings approved by CGU. The most economical mode of travel, in terms of direct expenses to the Project, must be used.

NOTE: If a certain conference/training, such as SFST Training or Borkenstein Alcohol Course, requires travel and is NOT specified in the Grant Agreement, contact your Grant Administrator as soon as possible. **CGU approval must be obtained prior to travel**. To request CGU approval please provide the following information via e-mail to your Grant Administrator:

- Travel date(s)
- Location of the conference/training
- Employee Name and Classification
- Name of existing budget line item that will cover these travel costs.

Travel must occur within the Project Performance Period to receive reimbursement.

Out-of-State

Grantees shall use the out-of-state lodging reimbursement rates established by their Organization/Agency; however, meals and incidentals will be reimbursed at the State travel rates.

In-State

Grantees shall not exceed the travel rates paid to exempt, excluded, and represented State of California employees and will be reimbursed at the State travel rates. Any costs beyond State travel rates will be at the expense of the Grantee. For additional information, visit the California Department of Human Resources (CalHR) website: Travel Reimbursements - CalHR.

Travel Expense Examples

- Lodging to attend conferences/trainings (must have CGU approval prior to attending)
- Mileage (based on current State rate) or fuel expenses
- Per Diem for approved meals (based on current State rate)
- Rental car fees
- Commercial airline fares
- Parking fees
- Bridge tolls
- Taxi or bus fares

Meals cannot be claimed if they are provided by the hotel, training, conference, etc. Snacks and continental breakfasts, such as rolls, juice, and coffee, are not considered meals. Refer to CalHR for the travel timeframes for when meals can be claimed.

NOTE: Please complete one Travel Claim Form per trip, per employee, and submit with the required supporting documentation through the GMS. For each trip, per employee, submit travel expense in their entirety; do not split across multiple Reporting Periods or Expense line items in the GMS. The Start Date is the first day of paid travel and the End Date is the last day of paid travel. Your Grant Administrator will provide an electronic copy of the form.

Supporting Documentation

Travel supporting documentation may include a paid receipt, paid invoice, or paid online confirmation (ex: airline, rental car) that **must show a paid in full/zero balance. Proof of payment, stay, or travel may be requested.**

In addition to a Travel Claim Form, please ensure the following information is provided:

- Trip name
- Traveler name
- Location
- Travel dates (must be within Project Performance Period / when paid travel begins & ends)
- Purpose of trip
- Start and end time of travel (when paid travel begins & ends)
- Total expense for reimbursement, and
- Zero balance, proof of payment, stay, or proof of travel.

Lodging

Please include an itemized receipt that is pre-printed (folio) with the hotel name, address, charges, and a paid in full/zero balance.

Mileage or Ridesharing

Please include a mapped route with start/finish address and locations, and a paid in full/zero balance or proof of payment.

Per Diem

Individual receipts for meals are not required but must be kept on file at your Organization/Agency must be on file and readily available for auditing purposes. Refer to CalHR for the travel timeframes for when meals can be claimed.

Excess Lodging Request

If attending an **in-state,** CGU-approved conference, and the conference blocked room rate exceeds the State travel rate, Grantees may submit an Excess Lodging Request **prior to booking travel**.

Please copy and paste the below bullets in an e-mail (Subject line = Excess Lodging Request) to your Grant Administrator and provide an answer for **each** bullet:

- Conference name
- Location
- Conference dates (must be within Project Performance Period)
- Conference blocked room rate
- Difference between conference blocked room rate and state travel room rate
- Detailed justification for Excess Lodging Request

Excess Lodging Requests will only be allowed under special circumstances with CGU approval. Excess Lodging Requests are effective once approved by CGU. If prior CGU approval is not received, Reimbursement Requests containing an excess lodging room rate will not be approved and travel costs will be reimbursed at the State travel rate.

Equipment

Equipment costs include grant -funded purchases of non-expendable, tangible, personal property having a normal useful life of more than one year and an acquisition cost of at least $5,000 or more per asset (ex: four identical assets which cost $1,250 each, for a $5,000 total, would not be considered an equipment purchase).

Equipment not specified in the Grant Agreement must be submitted to and approved by CGU prior to purchase. Equipment should be purchased at the beginning of the Project Performance Period to ensure it is utilized when completing corresponding Project activities. Equipment must be purchased and received within the Project Performance Period to receive reimbursement.

Supporting Documentation

Equipment supporting documentation may include a paid receipt or paid invoice but **must show a paid in full/zero balance or proof of payment.** Please ensure the following information is provided:

- Vendor name
- Purchase date (must be within Project Performance Period)
- Invoice number
- Item(s) purchased
- Total expense for reimbursement
- Zero balance or proof of payment
- VIN/Serial numbers (included on invoice or in photo), and
- Photo(s) of equipment item

Paid accrued taxes must be submitted with a copy of a paid receipt or paid invoice containing a paid in full/zero balance or proof of payment for the correlating equipment purchase. Please include the tax percentage and proof of payment for the accrued taxes. **Please submit both paid accrued taxes and equipment expenses in their entirety; do not split across multiple Reporting Periods or Expense line items in the GMS.**

Messaging

Equipment, such as vehicles (ex: car, motorcycle), DUI Trailers, etc., must be marked, indicating that they are primarily used for Driving Under the Influence (DUI) Enforcement and display a message supporting DUI Enforcement.

Messaging types may include:

- Decal (ex: window, door)
- Wrap (ex: entire DUI Trailer)

Messaging examples may include:

- DUI Enforcement
- DUI/DUID Education and Outreach
- "Always Designate a Sober Driver" or other DUI message

Messaging and Grantee logos must be submitted to and approved by CGU prior to purchase/display.

NOTE: By submitting equipment supporting documentation, the Grantee certifies that equipment was added to the inventory log at the Organization/Agency and can verify the location. Any equipment purchased with grant funds may be subject to review during site visits/audits and is property of the purchasing Organization/Agency.

Equipment Management Requirements

California Code of Regulations Section 1890.19

The following requirements apply to all equipment purchased with grant funds:

- Equipment shall only be used for its intended purpose for the duration of its useful life.
- Grantees shall keep equipment purchased with grant funds maintained in safe working order and stored securely.
- To be eligible for reimbursement, Grantees must purchase and receive equipment prior to the close of the Project Performance Period.
- Lost or stolen equipment purchased with grant funds, within five years of the date of loss or theft, shall be reported immediately to CGU by the Grantee (if applicable, the Grantee shall send a copy of the police report to CGU).
- Prior to disposition of equipment purchased with grant funds, the Grantee shall notify CGU via e-mail and dispose of the equipment, in accordance with the Grantee's Organization/Agency policy.

Consultants/Contracts

Contracted services shall be utilized in direct support of Project activities. The Grantee shall be responsible for the Contractor's compliance with program regulations, the Grant Agreement, and Project requirements. Contracted services shall not affect the Grantee's overall responsibility for the management of the Project.

A copy of the Contract and/or Scope of Work must be submitted to and approved by CGU prior to commencement of work. Services must be rendered within the Project Performance Period to receive reimbursement.

While Nonprofits are categorized as Consultants/Contracts, the guidance for all Budget Categories still applies. See the applicable Budget Category in this guide for additional information.

Supporting Documentation

Consultants/Contracts supporting documentation should allow CGU to determine if invoiced expenses are permissible, reasonable, and necessary for the performance of the Project. Supporting documentation may include a paid receipt or paid invoice but must show a paid in full/zero balance or proof of payment. If applicable, please ensure the following information is provided:

- Time study, and
- Detailed activity report

Other Direct Costs

Other Direct Costs include Operational Costs. Supplies and materials may be purchased, provided the items are claimed at a cost no higher than the original purchase price paid by the Grantee.

Other Direct Costs not specified in the Grant Agreement must be submitted to and approved by CGU prior to purchase. Other Direct Costs should be purchased at the beginning of the Project Performance Period to ensure they are utilized when completing corresponding Project activities. Other Direct Costs must be purchased and received within the Project Performance Period to receive reimbursement.

Supporting Documentation

Other Direct Costs supporting documentation may include a paid receipt or paid invoice but must show a paid in full/zero balance or proof of payment. Please ensure the following information is provided:

- Vendor name
- Purchase date (must be within Project Performance Period)
- Invoice number (if applicable)
- Item(s) purchased
- Total expense for reimbursement, and
- Zero balance or proof of payment

Registration Fees

Please ensure the following information is provided:

- Conference/Training name
- Attendee name
- Location
- Conference date(s) (must be within Project Performance Period)
- Total expense for reimbursement
- Zero balance or proof of payment, and
- Proof of attendance (ex: copy of badge, agenda, handout)

EDUCATION AND OUTREACH

Education Events and Presentations

Education Events and Presentations may include community meetings, cannabis industry outreach, school outreach programs, high school/college presentations, and education programs. Prior to conducting presentations, please share the content/presentation with your Grant Administrator. **Education Events and Presentations must occur within the Project Performance Period to receive reimbursement.**

When reporting Education/Outreach Achievements, please provide:

- Photos
- Educational content
- Impact data (ex: number of attendees, list of public establishments), and
- Address/location if contact was made in person or virtual (include platforms).

Outreach Materials and Advertising

Outreach Materials and Advertising may include press releases, social media postings, brochures, flyers, PowerPoint presentations, billboards, print advertisements, and radio advertisements.

Outreach Materials and Advertising must be submitted to and approved by CGU prior to airing, publication, or distribution. Outreach Materials and Advertising should be purchased at the beginning of the Project Performance Period to ensure they are utilized when completing corresponding Project activities. Outreach Materials and Advertising must be purchased, received, and aired/run/displayed within the Project Performance Period to receive reimbursement.

Messaging

All messaging and Grantee logos must be submitted to and approved by CGU prior to purchase/display.

Messaging verbiage must include both:

- The statement, "Funded by the CHP Cannabis Tax Fund Grant Program", and
- Educational message against impaired driving

MODIFICATIONS

Budget Modification Request

Grantees seeking to reallocate grant funds to accomplish the intent of the original Grant Agreement and Project activities may submit a Budget Modification Request in Q1, Q2, or Q3. In Q4, Budget Modification Requests will only be allowed under special circumstances with CGU approval.

Please copy and paste the below bullets in an e-mail (Subject = Budget Modification Request) to your Grant Administrator and provide an answer for **each** bullet for **each** reallocation of grant funds:

- Requested item(s) and/or service(s)
- Explanation of reasons/circumstances that justify the modification
- Description of how requested item(s) and/or service(s) will positively improve the Project
- Description of potential implications if the Budget Modification is not approved
- Budget line item name(s) you are transferring *from*

- Budget line item name(s) you are transferring *to*
- Amount(s) for reallocation

Budget Modification Requests will become effective once approved by CGU. If prior CGU approval is not received, Reimbursement Requests shall be denied. CGU and the Grantee shall retain copies of all Budget Modification Request documents.

Project Contact Change Request

Grantees requesting to update personnel contacts during the Project Performance Period must submit a Project Contact Change Request.

Please copy and paste the below bullets in an e-mail (Subject = Project Contact Change Request) to your Grant Administrator and provide an answer for **each** bullet for **each** change:

- Effective date
- Current Project contact name (first and last) & title
- Telephone number
- E-mail address
- Mailing address
- New Project contact name (first and last) & title
- Telephone number
- E-mail address
- Mailing address

PROJECT PERFORMANCE REVIEW

Monitoring/Site Visits

CGU may conduct a Project Performance Review to determine progress towards the completion of the Project. Project Performance Reviews may be accomplished by desk review, questionnaire, site visits, and/or other means of review. The Project Performance Review may be conducted before, during, or at the end of the Project Performance Period.

CLOSEOUT
Achievements and Expenses

Achievements

Grantees are required to report on achieved Project goals and activities (Achievements) that occurred during the Project Performance Period, and provide a final Project Status/Closeout Achievement (ex: Q4 – Project Status/Closeout) by the due date listed in this guide under Important Dates. Please ensure the following information is provided:

- Detailed summary of completed Project
- Success stories
- Obstacles faced
- Project goals/activities not accomplished
- Justification for unspent grant funds

Expenses

In addition to Achievements, and if applicable, Grantees will submit a final Reimbursement Request with required supporting documentation **within sixty calendar days** after the completion of the Project, or the end date, as specified in the Grant Agreement or amended Grant Agreement, whichever comes first. Please ensure the following information is provided:

- Supporting documentation for Expenses
- Subcontracted work, notice of completion (if applicable), and
- Photos of completed Project goals and activities (if applicable)

Please allow enough time for the Grant Administrator to review the submitted information to ensure a Reimbursement Request is submitted by the due date. **CGU reserves the right to request additional information, as needed.**

AUDITING
Requirements & Principles

Record Retention

Grantees shall retain all documents, records, receipts, and financial accounts pertinent to the Project necessary to substantiate the purpose for which grant funds were spent, for **five years** from the expiration of the Grant Agreement.

Audit Requirements

Auditors may request, but are not limited to, the following documentation:

- Job/Source code
- Components of indirect/administrative costs reimbursed by the grant
- Reports of employees by position/title, including job descriptions and staff time/benefits reimbursed by the Grant
- Timesheets signed by the employee and supervisor for staff time reimbursed by the grant

- Invoices, canceled warrants for Contracts, materials, services, and supplies
- All Contracts and Service Agreements reimbursed by the Grant
- Vehicle records/mileage logs for transportation cost, including the Grantee's relevant policies, processes, and documentation pertaining to usage costs and mileage rates
- Vehicle Identification Numbers, equipment serial numbers, title, and photographs of equipment purchases reimbursed by the grant

Basic Principles

- Maintain complete records and keep on file at the Organization/Agency.
- Be prepared and have records readily available for an audit and/or site visit.
- Reimbursements cannot exceed actual costs expensed for a Project activity.
- Request reimbursement for Expenses only once.
- Respond to requests in a timely manner.

If you have any questions, please contact the CGU at (916) 843-4360.

AGENDA ITEM NO. 1.

CITY OF SOLEDAD
STAFF REPORT

SUBJECT: **Presentation on the Salinas Valley Safe Routes to Schools Plan**

TO: **Honorable Mayor Velazquez and City Council**

FROM: **Alex Ramos, Assistant Engineer**

THROUGH: **Megan Hunter, City Manager**

MEETING DATE: **November 6, 2024**

Recommendation

It is recommended that the City Council of the City of Soledad receive a presentation regarding the Salinas Valley Safe Routes to Schools Plan and provide input.

Executive Summary

The Salinas Valley Safe Routes to School Plan is now in a stage in which it is seeking input from the City Council in addition to an infrastructure recommendation to improve access to the eight public schools in the City of Soledad. The full executive summary of this project and the Plan for Soledad may be found as attachments to this report.

Background

The Transportation Agency for Monterey County, Monterey County Health Department, Ecology Action, and the cities of Gonzales, Soledad, Greenfield, and King City have partnered to develop the Salinas Valley Safe Routes to School Plan ("Plan"). The three-year planning process identified barriers to safe access to 22 public schools in South Monterey County cities and recommended infrastructure and non-infrastructure improvements.

The Salinas Valley Safe Routes to Schools Plan identifies barriers to safe, convenient transportation and will guide future improvements around 22 public schools in five school districts. Recommendations included in the Plan are designed to help address school-based traffic congestion and improve student health by fostering increased biking, walking, and carpooling. The project team, comprised of staff from the Transportation Agency, County Health Department, Public Works staff from the four cities, School Districts, and non-profit Ecology Action, have engaged administrators, parents, and students in school bike/walk assessments, mapping activities, street demonstrations, and surveys.

The Salinas Valley Safe Routes to School Plan kicked off in spring 2022 and started outreach in the City of Soledad in fall 2022. The planning team conducted walking audits at each of the eight public

schools in Soledad, gave 12 presentations at parent meetings, and received 208 responses to an online parent survey. In 2023, the planning team drafted and received community input on a list of infrastructure and non-infrastructure recommendations around the Soledad schools. Starting in fall 2022, the planning team planned and implemented four pilot projects, one in each city, to demonstrate some of the recommendations included in the plan and get community feedback. The Soledad pilot project was held on Front Street in 2023. The planning team also formed Steering Committees in each of the four cities. Steering Committees led a democratic process, called Participatory Budgeting, where community members vote to decide how public funds are spent. TAMC is providing up to $250,000 to each city to implement the highest-voted projects.

Review & Analysis

The project team is now seeking input on the Draft Salinas Valley Safe Routes to School Plan, including infrastructure recommendations to improve access to the eight public schools in Soledad. The Executive Summary is included as an attachment to this report, and the full Plan for Soledad is linked below. The final Plan is anticipated to be adopted in January 2025. Once the Plan has been adopted, the Cities of Gonzales, Soledad, Greenfield, and King City and TAMC staff will pursue funding to implement recommendations in the Plan.

The Plan includes Citywide recommendations for bicycle and pedestrian corridor improvements, as well as recommendations around each school site and non-infrastructure recommendations for education and encouragement programs. All recommendations are planning-level and require further analysis prior to construction.

The projects in this plan will be implemented over time as funding becomes available. With limited funding, the City of Soledad must decide how to prioritize the recommendations. The Plan identifies a list of eight high-priority corridors that were evaluated based on common grant criteria. These corridors were scored to help City staff and decision-makers prioritize projects and identify the most competitive projects for various grant opportunities. Grant programs often prioritize large-scale, corridor-wide improvements, and future grant applications are likely to focus on improvements to one or more streets in Soledad rather than individual projects.

Some projects that are low cost and have community support can be incorporated into the City's maintenance programs and installed as part of ongoing road maintenance. City staff will review the Safe Routes to Schools Plan project list when planning maintenance projects to look for ways to incorporate bike and pedestrian improvements. This allows for a highly cost-effective strategy for implementing the projects included in this plan. For larger projects, leveraging local funds with additional grant funding will be critical. Having an approved Safe Routes to Schools Plan in place is a strategy to make Salinas Valley cities more competitive in future grant applications for construction funding.

Financial Considerations

The Salinas Valley Safe Routes to School Plan was funded through a $664,127 Caltrans Sustainable Transportation Planning Grant and $126,501 of Measure X Safe Routes to School Program funds through TAMC. The City has only allocated Soledad City staff time to help develop the plan.

Alternatives

- Deemed informative presentation as received and provide feedback; or
- Deemed the informative presentation received and request additional information

Planning/CEQA

This presentation is not considered a project pursuant the California Environmental Quality Act (CEQA) Guidelines Section 15378.

Public Notice Requirements

None required.

Attachment(s):
Salinas Valley Safe Routes to Schools Plan Executive Summary
Soledad Safe Routes to Schools Plan
Soledad Draft Plan

Salinas Valley Safe Routes to Schools Plan Executive Summary

The Salinas Valley Safe Routes to Schools Plan describes community-identified needs and recommendations for infrastructure projects and programs that support walking, bicycling, and carpooling to 22 schools in Gonzales, Soledad, Greenfield, and King City. The plan also identifies possible funding sources and implementation priorities. The recommendations in this plan are aimed at supporting healthy communities, improving affordable transportation options for low-income and vulnerable residents, and helping the four cities improve safety and meet statewide goals to address climate change by reducing vehicle miles traveled.

This plan was funded with a Sustainable Communities Transportation Planning Grant from the California Department of Transportation (Caltrans) and local matching funds, and it is aligned with the regional and statewide plans and concepts included in the Caltrans District 5 Active Transportation Plan.

The vision for all students and families following the implementation of the Salinas Valley Safe Routes to Schools Plan is as follows:

- I can walk or bike to school safely.
- My trip to school helps our environment, builds healthy habits, and saves my family money.
- I am more connected to my neighborhood and community through my trip to school.
- I have the skills and confidence I need to travel to school safely without using a car.

Plan Contents

The introduction and outreach chapters include an overall introduction and a summary of outreach for the project. The remainder of the plan is divided into four sections, one for each of the four cities.

Chapter 1: Introduction.

The first chapter describes the purpose of the plan, the benefits of walking and biking to school, and the plan's relationship to other local planning efforts.

Chapter 2: Outreach.

This chapter describes the outreach goals for the project and summarizes the various outreach methods used to involve community members in the planning process.

Chapter 3: Gonzales.

- **3A. Existing Conditions.** This section describes the demographics and commute patterns of Gonzales residents, and existing bike, pedestrian, and transit facilities. It also includes an analysis of bicycle and pedestrian collisions and a description of the existing bicycle and pedestrian programs that are currently available to residents.
- **3B. Outreach.** This section describes the public outreach that took place in Gonzales, including community survey data from the temporary pilot project that was installed as part of the planning process.
- **3C. Recommendations.** This section contains profiles of each of the three school sites, with information on the existing conditions at each school and infrastructure recommendations for

DRAFT

making it easier and safer to walk and bike to school. It also includes a guide to the types of infrastructure that are recommended in this plan.

- **3D. Implementation, Reporting, and Maintenance.** The final section discusses opportunities to fund and complete the recommended projects and programs and provides a list of high-priority corridors. It also includes a list of funding sources that can be used to finance these projects and programs, and the methods the City will use to maintain current and future pedestrian and bicycle infrastructure.

Chapter 4: Greenfield.

- **4A. Existing Conditions.** This section describes the demographics and commute patterns of Greenfield residents, and existing bike, pedestrian, and transit facilities. It also includes an analysis of bicycle and pedestrian collisions and a description of the bicycle and pedestrian programs that are currently available to residents.
- **4B. Outreach.** This section describes the public outreach that took place in Greenfield, including community survey data from the temporary pilot project that was installed as part of the planning process.
- **4C. Recommendations.** This section contains profiles of each of the six school sites, with information on the existing conditions at each school and infrastructure recommendations for making it easier and safer to walk and bike to school. It also includes a guide to the types of infrastructure that are recommended in this plan.
- **4D. Implementation, Reporting, and Maintenance.** The final section discusses opportunities to fund and construct the recommended projects and programs and provides a list of high-priority corridors. It also includes a list of funding sources that can be used to finance these projects and programs, and the methods the City will use to maintain current and future pedestrian and bicycle infrastructure.

Chapter 5: King City

- **5A. Existing Conditions.** This section describes the demographics and commute patterns of King City residents, and existing bike, pedestrian, and transit facilities. It also includes an analysis of bicycle and pedestrian collisions and a description of the bicycle and pedestrian programs that are currently available to residents.
- **5B. Outreach.** This section describes the public outreach that took place in King City, including community survey data from the temporary pilot project that was installed as part of the planning process.
- **5C. Recommendations.** This section contains profiles of each of the five school sites, with information on the conditions at each school and infrastructure recommendations for making it easier and safer to walk and bike to school. It also includes a guide to the types of infrastructure that are recommended in this plan.
- **5D. Implementation, Reporting, and Maintenance.** The final section discusses opportunities to fund and construct the recommended projects and programs and provides a list of high-priority corridors. It also includes a list of funding sources that can be used to finance these projects and programs, and the methods the City will use to maintain current and future pedestrian and bicycle infrastructure.

DRAFT

Chapter 6: Soledad

- **6A. Existing Conditions.** This section describes the demographics and commute patterns of Soledad residents, and existing bike, pedestrian, and transit facilities. It also includes an analysis of bicycle and pedestrian collisions and a description of the bicycle and pedestrian programs that are currently available to residents.
- **6B. Outreach.** This section describes the public outreach that took place in Soledad, including community survey data from the temporary pilot project that was installed as part of the planning process.
- **6C. Recommendations.** This section contains profiles of each of the eight school sites, with information on the conditions at each school and infrastructure recommendations for making it easier and safer to walk and bike to school. It also includes a guide to the types of infrastructure that are recommended in this plan.
- **6D. Implementation, Reporting, and Maintenance.** The final section discusses opportunities to fund and construct the recommended projects and programs and provides a list of high-priority corridors. It also includes a list of funding sources that can be used to finance these projects and programs, and the methods the City will use to maintain current and future pedestrian and bicycle infrastructure.

Appendices: The appendices include outreach materials, survey data from the parent survey and the temporary installations, the complete project list for all 22 schools, and public comments received for all school sites.

Goals and Objectives

The cities of Gonzales, Greenfield, King City, and Soledad and partner agencies have set the following goals and objectives for the future of Safe Routes to Schools, to be accomplished through the projects and programs in this plan.

Goal 1. Encouragement: The majority of children will arrive at school by foot, bicycle, scooter, skateboard, bus, or carpool.

- Objective 1.1: Identify and promote a broad spectrum of projects to provide a connected network of active transportation options along Safe Routes to Schools corridors and connections.
- Objective 1.2: Design and construct street improvements that are accessible and comfortable for all ages and abilities. Incorporate tree planting into active transportation projects to provide shade for people who are walking and bicycling.
- Objective 1.3: Transportation Agency for Monterey County (TAMC), schools, and the cities will support events that encourage active transportation to school, such as “Walk & Roll to School,” at least twice a year.
- Objective 1.4: Work with schools and Safe Routes to Schools partners to provide walking school buses at all elementary schools.
- Objective 1.5: Work with schools and Safe Routes to Schools partners to promote Safe Routes to Schools corridors as the preferred routes to school.

DRAFT

Goal 2. Safety: Zero collisions involving bikes or pedestrians that result in injury or death.

- Objective 2.1: Prioritize Safe Routes to Schools projects that address fatal and severe-injury crashes.
- Objective 2.2: Prioritize projects on school routes that reduce traffic speeds to 25 mph or less and increase the separations between pedestrians and bicyclists and motor vehicle traffic.
- Objective 2.3: Enhance low-stress alternative routes to high-stress corridors.
- Objective 2.4: Prioritize safety over travel speed, convenience, and congestion reduction in project design.
- Objective 2.5: Crossing guards will be present at all elementary schools.
- Objective 2.6: Provide annual updates on safety projects and traffic collisions to governing bodies.

Goal 3. Education: All children in the Salinas Valley will receive traffic safety education.

- Objective 3.1: Incorporate bicycle and pedestrian safety education into the curriculum in all elementary schools.
- Objective 3.2: By second grade, all children will receive pedestrian safety training in school; by fifth grade, all children will receive bike safety training in school.
- Objective 3.3: By high school, students will know the basics of bike maintenance and have opportunities to practice these skills at school or in the community.

Goal 4. Engagement: Engage the greater community to create safe environments around schools.

- Objective 4.1: Run annual community-wide campaigns that encourage neighbors to keep eyes on the streets and drivers to slow down around schools.
- Objective 4.2: Enforce traffic laws in school zones without overburdening offenders. An example would be a diversion program that requires school-zone traffic offenders to assist with crossing guard duties (Austin, TX program model).
- Objective 4.3: Recruit volunteers from the community to assist with Safe Routes to Schools programs such as walking school buses and crossing guards.

Goal 5. Equity: Ensure that all community members have equitable access to schools and Safe Routes to Schools programming.

- Objective 5.1: Prioritize infrastructure projects that serve transportation-disadvantaged and special-needs populations.
- Objective 5.2: Provide opportunities for a diverse group of community members to take leadership roles in the development and implementation of Safe Routes to Schools projects and programs. An example would be positions on a Safe Routes to Schools steering committee.
- Objective 5.3: Provide access to active transportation and safety equipment such as bicycles, scooters, helmets, and lights.

DRAFT

Outreach Summary

Public input was the foundation of the Safe Routes to Schools Plan. The planning team developed an outreach plan and sought input from community members to understand school transportation needs and barriers and to refine their draft recommendations. Parent and student surveys, presentations at parent meetings, and walking audits with school staff all contributed to the team's understanding of barriers to walking and biking to school in Salinas Valley cities and the types of improvements community members would like to see.

In addition, Steering Committees were formed in each of the four cities to lead a participatory budgeting process. This is a democratic process in which community members decide how to spend part of a public budget. The Steering Committees were made up of representatives from each city, including students, parents, school staff, advocates, and residents. Each Steering Committee met monthly for nine months to review project recommendations and design an election process for learning from the community about the highest priority projects in the Safe Routes to Schools Plan. TAMC allocated $250,000 per city to construct the highest-priority projects.

- Parent Outreach
  - 42 presentations at virtual parent meetings
  - 1,109 responses to online parent survey
  - 26 responses to draft recommendations survey
  - 15,000+ parents reached through Parentsquare or social media
- Student Outreach
  - 1,824 responses to student survey
- Temporary Installations
  - 4 demonstration projects: on 12th Street in Greenfield, 5th Street in Gonzales, Front Street in Soledad, and Collins Street in King City
- Steering Committees
  - 4 Steering Committees formed, in Gonzales, Soledad, Greenfield, and King City
  - 21 projects awarded funding through participatory budgeting process
  - $1 million in project funding awarded from TAMC

DRAFT

Project Prioritization

Key routes to school in each of the four cities were ranked to help decision makers and City staff prioritize projects and identify the most competitive projects for various grant funding opportunities. Grant programs often prioritize larger-scale, corridor-wide improvements, and future grant applications will likely focus on improvements to one or more streets in each city.

The corridors below were evaluated on four criteria aligned with the vision and goals of this plan and with common grant criteria. Equity scores are based on two sources: free or reduced-price meal data, which is an indicator of family income, and the Healthy Places Index map, which shows data on health indicators such as education, job opportunities, and clean air and water. Each corridor was assigned a number from 0 to 100 based on the criteria in Table 1.

Table 1: Criteria for Project Prioritization

Criterion	Description	Max Points
Safety	The following points are awarded for bicycle and pedestrian collisions in the last 10 years within 150 ft of the project, for a maximum of 30 points: • 5 points per fatal or severe-injury collision. • 1 point per other visible injury or complaint-of-pain collision.	30
Access to Key Destinations	10 points for every school within 500 ft of the corridor and 5 points for every park, library, and recreation center, for a max of 25 points.	25
Equity	20 points if the project is located within an area designated as disadvantaged.	20
Community-Identified Need	15 points if the project or location was identified by 10+ members of the community during project outreach. 10 points if the project or location was identified in one or more community planning documents.	25
	TOTAL	100

Prioritized Corridor Lists

The tables below show the highest-priority corridors for Safe Routes to Schools improvements in each of the four cities.

Table 2: Prioritized Corridors, Gonzales

Street	Cross Street 1	Cross Street 2	Score
5th Street	Alta Street	Fanoe Road	**100**
Elko Street	5th Street	1st Street	**70**
Center Street	10th Street	A Street	**60**
7th Street /Cielo Vista	Alta Street	Del Monte Drive	**45**
Belden Street	10th Street	C Street	**40**
Longhorn Drive	Hereford Drive	Devon Way	**25**

Table 3: Prioritized Corridors, Greenfield

Street	Cross Street 1	Cross Street 2	Score
Apple Avenue	13thStreet	2nd Street	**100**
Oak Avenue	13thStreet	2ndStreet	**100**
Walnut Avenue	12th Street	2ndStreet	**100**
Elm Avenue	13th Street	3rd Street	**95**
El Camino Real	Cherry Avenue	Hwy 101 off-ramp	**95**
9th Street	Elm Avenue	Apple Avenue	**55**
12th Street	Harvest Way	Elm Avenue	**50**
7th Street/Moreno Avenue	Tyler Avenue	End of street	**40**

DRAFT

Table 4: Prioritized Corridors, King City

Street	Cross Street 1	Cross Street 2	Score
Broadway Street	River Drive	1st Street	**100**
Mildred Avenue	San Antonio Drive	Broadway Street	**95**
San Antonio Drive	Broadway Street	Metz Road	**80**
Russ Street	King Street	Pearl Street	**80**
Pearl Street	San Lorenzo Avenue	1st Street	**60**
King Street	Sandringham Street	Beech Street	**60**
Ellis Street	Mildred Avenue	1st Street	**55**
Collins Street	Mildred Avenue	3rd Street	**55**
Division Street	Canal Street	1st Street	**50**

Table 5: Prioritized Corridors, Soledad

Street	Cross Street 1	Cross Street 2	Score
Main Street	Gabilan Drive	Front Street	**95**
Orchard Lane/3rd Street	Palm Avenue	Terraza Street	**80**
Gabilan Drive	San Vicente Road	Bryant Canyon Road	**80**
Metz Road	East Street	Tiburon Place	**80**
Market Street	San Vicente Road	Dixi Street	**75**
Monterey Street	West Street	8th Street	**70**
West Street	Front Street	Cuesta Court	**65**
Front Street	East Street	Nestles Street	**50**

DRAFT

Participatory Budgeting Approved Projects

Participatory budgeting is a democratic process in which community members decide how to spend part of a public budget. TAMC allocated $250,000 per city to construct the highest-priority projects, and Steering Committees were formed in each of the four cities to lead a participatory budgeting process to determine the highest priority projects. The following projects were awarded funding through this process.

Table 6: Participatory Budgeting Funded Projects, Gonzales

School	Location	Project Description
All	5th Street at Hwy 101 North Entrance	Study options to install roundabout, study quick-build curb extensions, and install high-visibility crosswalks and signage.
All	5th Street at Hwy 101 South Entrance	Study options to install roundabout, study quick-build curb extensions, and install high-visibility crosswalks and signage.
All	5th Street at Rincon Road	Install curb extensions to move the existing crosswalk closer to the center line on 5th Street. Install high-visibility crosswalks on north

		and south legs of intersection. Relocate stop bar to prevent cars from encroaching on crosswalk.

Table 7: Participatory Budgeting Funded Projects, Greenfield

School	Location	Project Description
Vista Verde Middle, Oak Avenue Elementary	12th Street between Oak and Elm Avenues	Install 0.24 miles of sidewalk, high-visibility crosswalks, curb ramps, and flashing stop signs.
All schools	Citywide	Upgrade signs around all school campuses.
Arroyo Seco Academy	12th Street between Cherry Avenue and Harvest Way	Install 0.12 miles of sidewalk on 12th Street.
Vista Verde Middle, Greenfield High	Heidi Drive	Install high-visibility crosswalk and school crossing signage.

Table 8: Participatory Budgeting Funded Projects, King City

School	Location	Project Description
Chalone Peaks Middle	Intersection of San Antonio Drive and Spreckels Road	Install stop bars and high-visibility crosswalks on each leg of intersection.
King City High	Intersection of Canal Street and Division Street	Install high-visibility crosswalks and ADA-compliant curb ramps on each corner of the intersection.
Del Rey Elementary	Intersection of King Street and Russ Street	Install high-visibility crosswalks and station a crossing guard at this intersection.
Del Rey Elementary	Intersection of King Street and 3rd Street	Install high-visibility crosswalks and ADA-compliant curb ramps on each corner of the intersection.
Santa Lucia Elementary	Intersection of Russ Street and Ulrey Street	Install high-visibility crosswalks on the south and east legs of the intersection, and install advance yield markings.
Santa Lucia Elementary	Intersection of 3rdStreet and Ulrey Street	Install high-visibility crosswalks on the north, south, and west legs of the intersection.
Santa Lucia Elementary	Intersection of Collins Street and Mildred Avenue	Install high-visibility crosswalks on the north and east legs of the intersection and ADA-compliant curb ramps on the northeast, northwest, and southeast corners.
Santa Lucia Elementary	Intersection of Collins Street and Patterson Street	Install high-visibility crosswalks on the north and south legs of the intersection.
All schools	Ellis Street between Mildred Ave and 2nd Street	Install high-visibility crosswalks on the north and south legs of each intersection.
All schools	Intersection of Russ Street and Bassett Street	Install high-visibility crosswalks on the east and west legs of intersection and ADA-compliant curb ramps on each corner.

DRAFT

Table 9: Participatory Budgeting Funded Projects, Soledad

School	Location	Project Description
Jack Franscioni	Intersection of Orchard Lane and Gabilan Drive	Conduct a roundabout study. Station a second crossing guard at the intersection. Install ADA-compliant curb ramps on the northeast, northwest, and southwest corners, install stop bars and flashing stop signs on all legs, and install high-visibility crosswalk on the south leg of the intersection.
Pinnacles High	Intersection of Main Street and Gabilan Drive	Conduct a roundabout study. Dedicate two parking spaces on Main Street to a white curb loading zone for school drop-off and pick-up. Install curb extensions on the southeast and southwest corners of the intersection, and station crossing guards at the intersection, ideally one at the east and one at the west crosswalk.
Soledad High	Intersection of Benito and Gabilan Street	Install stop bars on the south leg of the intersection, install ADA-compliant curb ramps on the southwest corner, and install school-crossing pavement markings approaching the midblock crosswalk.
San Vincente Elementary	Orchard Lane, Metz Road	Install high-visibility crosswalks across side streets at Aromas Place, Cadena Drive, and Cambria Drive. Remove the current loading zone on the north side of Metz Road between Almond Acres and the midblock crosswalk, and make this a red curb. Move the loading zone to be west of the school driveway, and formalize the dirt parking lot and stripe the parking spaces.

DRAFT

Soledad Safe Routes to Schools Plan Chapter 6A. Existing Conditions

This chapter discusses current conditions in Soledad related to walking, bicycling, and transit use. This includes citywide demographics and commute trends, land use and community destinations, bicycle and pedestrian facilities, transit options, collision data related to walking and bicycling, bicycle and pedestrian projects that are currently in progress, and existing programs.

Demographics

Soledad was home to an estimated 26,966 people in 2024.[1] The city has a lower youth population than Monterey county as a whole, with 23.5% of residents being under the age of 18.[2] Seniors represent a smaller proportion, with 6% of residents being over the age of 65.[2] The median age is 35.3, which is higher than the median for Monterey County as a whole.

Among Soledad residents, 30.2% identify as white, 76% as Hispanic or Latino, and 2% as Asian. Forty-three percent of residents did not finish high school, and 27% completed high school as their highest level of education. Thirty percent of residents have at least some higher education, and 5% have either a bachelor's or a graduate degree.[2]

Active transportation investments are especially important in disadvantaged communities, which tend to have higher rates of walking and bicycling. According to the California Department of Education, 91% of students in Soledad public schools qualify for free and reduced meals, which is a sign of low-income status.[3] Fifty-seven percent of households have incomes of less than $50,000 per year, and 23% of families with children under 18 have incomes below the poverty level.[4]

Commute Trends

An estimated 6,522 Soledad residents over the age of 16 are employed, and 72% of those drive to work alone. Soledad has a higher rate of driving to work alone than Monterey County as a whole.[5]

Overall, 11% of Soledad residents carpool to work, and 2% walk. Less than 1% bike or take public transit. About 1% of residents work from home.

Although some Soledad commuters travel outside Monterey County for work, the majority (95%) stay within the county. The average commute time is 23 minutes; 29% of commuters travel for more than 30 minutes daily, and 10% for 45 minutes or more.[5]

---

[1] State of California Department of Finance, 2022. https://dof.ca.gov/forecasting/demographics/estimates/e-4-population-estimates-for-cities-counties-and-the-state-2021-2024-with-2020-census-benchmark/.

[2] Census American Community Survey 2017–2021. Selected Characteristics of US Populations, Table SO601.

[3] State of California Department of Education, 2021. https://www.cde.ca.gov/ds/ad/filessp.asp.

[4] Census American Community Survey 2017–2021. Selected Economic Characteristics, Table DP03.

[5] Census American Community Survey 2017–2021. Commuting Characteristics by Sex, Table SO801.

DRAFT

Although commute trips offer the best available data on travel modes, they represent only a percentage of trips. Comprehensive data on the percentage of Soledad residents walking or bicycling for other daily trips are not available.

Figure 1. Work Commute Travel Modes in Soledad

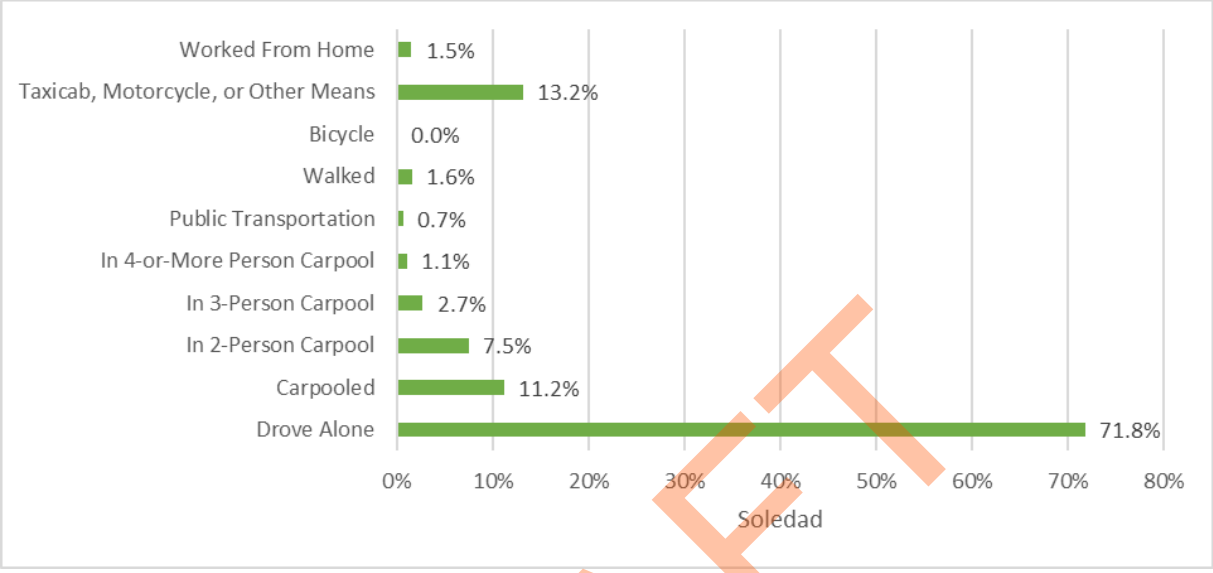

Source: U.S. Census Bureau.

Land Use and Major Destinations

Soledad is located north of Highway 101, but unlike other Salinas Valley communities the highway does not bisect the city. Public K–12 schools are located throughout the city, with several clustered on Gabilan Drive and Metz Road. Hartnell Community College recently opened a satellite campus in Soledad, on Orchard Lane at Metz Road. Commercial areas are located in the historic downtown along Front Street and in newer shopping centers at the southern end of the city. Other key destinations include parks, medical facilities, the Soledad Community Center, and the Soledad Library.

Existing Bicycle Network

There is currently only one type of bicycle facility in Soledad: class II bicycle lanes. These are on-street facilities that use striping and stencils to designate spaces for bicycle travel. They delineate the rights-of-way assigned to bicyclists and motorists and provide for more predictable movements by each user.

Soledad has the most comprehensive network of bicycle lanes among the Salinas Valley cities. Bike lanes are present on most streets adjacent to schools, including Gabilan Drive, West Street, Vista de Soledad, Orchard Lane, Main Street, and Metz Road. There are also bicycle lanes on many downtown streets, including Market Street, Monterey Street, and East Street.

DRAFT

Figure 2. Map of Soledad Bicycle Facilities

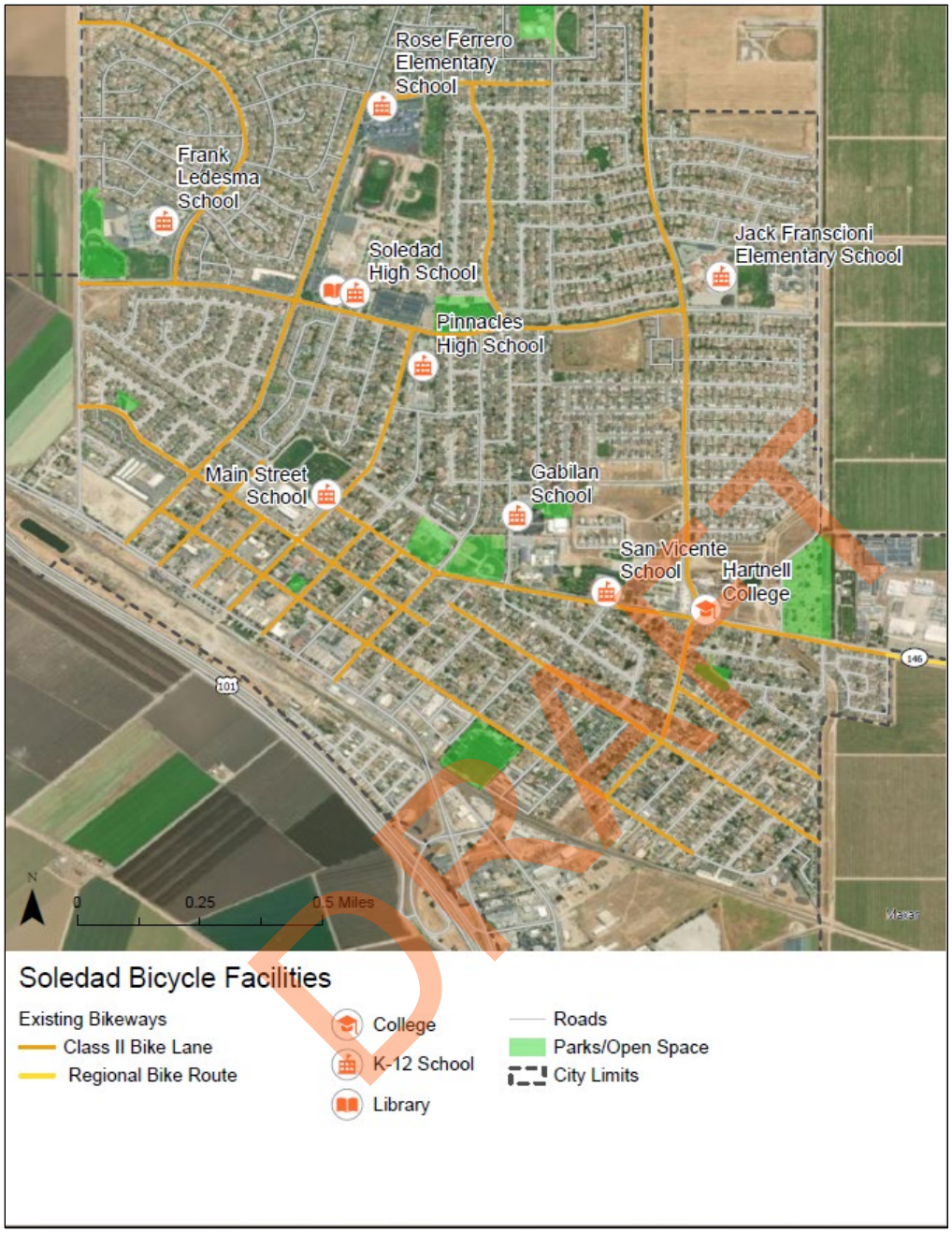

DRAFT

Existing Pedestrian Network

The City of Soledad has good sidewalk coverage, with sidewalk present on nearly all roadways. There is missing sidewalk on some roadways on the edge or outside city limits, such as the north side of Metz Road east of Bryant Canyon Road.

Curb ramps provide access between the sidewalk and the street for people with disabilities, children on bicycles, and people pushing strollers. Under the Americans with Disabilities Act (ADA), upgraded curb ramps must include warnings that are detectable by people with vision impairments. As the city repaves streets and installs roadway improvements, upgraded curb ramps are installed at intersections to comply with ADA standards.

Existing Transit Network

Soledad Unified School District offers busing to students based on age and the distance they live from their school, from ¾ of a mile for grades K–3 to more than two miles away for high school students. Busing is offered to special ed students and students who live in rural areas outside the city.

In addition to the transportation offered by school districts, Monterey-Salinas Transit (MST) offers bus transportation to the public. Youths aged 18 and younger receive discounted fares for all trips. MST bus routes were limited in Soledad at the time this report was written, though MST is working on a new circulator route within the city.

Active Transportation Safety

Bicycle and pedestrian-related collision data can be used to identify high-level collision trends and locations with high rates of bicycle and pedestrian collisions. This analysis uses data from UC Berkeley's Transportation Injury Mapping System (TIMS) over the ten-year period from 1/1/2012 to 12/31/2021. Note that the TIMS data include reported injury collisions only. Many bicycle and pedestrian collisions are not reported and therefore are not represented in this analysis.

Soledad has significant rates of collisions involving both bicyclists and pedestrians, with 37 pedestrian collisions and 9 bicyclist collisions between 2012 and 2021.[6] In the 2018 California Office of Traffic Safety crash rankings report, Soledad ranked in the top ten among cities of similar size for pedestrian collisions involving youths under 15.[7]

People walking and bicycling in Soledad are disproportionately involved in collisions relative to drivers. Data from the TIMS show that between 2012 and 2021, 40% of serious-injury and fatality collisions in Soledad involved pedestrians and 10% involved bicyclists.[8] This is disproportionate to walking and biking rates in the city, with less than 2% of work trips being made by walking or bicycling.[9]

DRAFT

---

[6] Safe Transportation Research and Education Center, University of California, Berkeley, 2021.

[7] California Office of Traffic Safety, 2018. Soledad 2018. Source: https://www.ots.ca.gov/rankings/soledad-2018/.

[8] Transportation Injury Mapping System, 2024. Statewide SWITRS Summary. Source: https://tims.berkeley.edu/summary.php?showArea=city&expandTables=false&injury=1&yearRange=10&showMap=crashes.

[9] Census American Community Survey 2015–2019 Commuting Characteristics by Sex, Table SO801.

Bicycle Safety

Over the ten-year study period, there were 9 bicycle-related injury collisions in Soledad, with an average of just under one collision per year. There were no fatal bicycle collisions in the ten-year period. One collisions caused severe injuries, 2 resulted in an "other visible injury," and 6 resulted in a "complaint of pain."

Figure 3. Annual Bicycle Collisions.

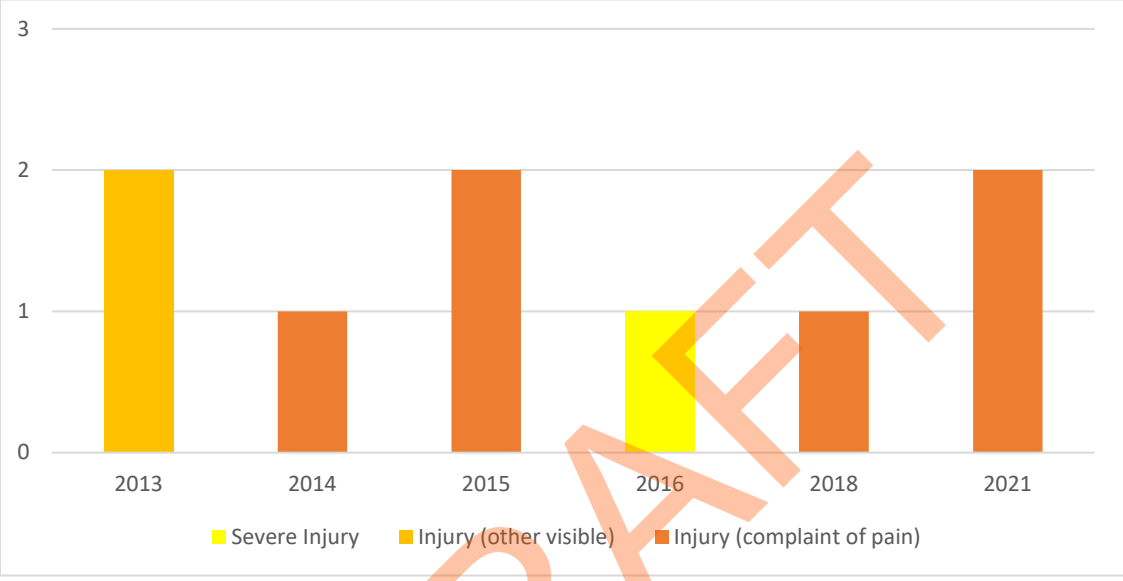

Source: UC Berkeley Transportation Injury Mapping System (TIMS).

Bicycle Collision Trends

Bicycle-related collision locations are shown in Figure 5. Key takeaways from the analysis include the following:

- **10% of collisions resulting in severe injury or fatality in Soledad involved people on bikes.** Although bicycle trips make up only a small percentage of the trips in Soledad, bicyclists are disproportionally involved in severe-injury and fatal collisions.

- **Bicycle-related collisions were distributed throughout the city.** The intersection of Front Street and East Street was the only location with more than one.

- **Bicycle collisions** were almost evenly split between streets with and without bicycle lanes. Several collisions took place on small neighborhood streets.

- **Youths aged 19 or younger were involved in 44% of bicycle collisions.** Youths aged 14 or younger were the top age group for bicycle collisions and were involved in 33% of collisions. Male bicyclists were much more likely to be involved in collisions and made up 78% of crash victims.

DRAFT

- **The most common bicycle collision factors,** according to the reporting law enforcement officer, were drivers' failure to yield (22%) and riding on the wrong side of the road (22%).

Figure 4. Severity of Bicycle Collisions

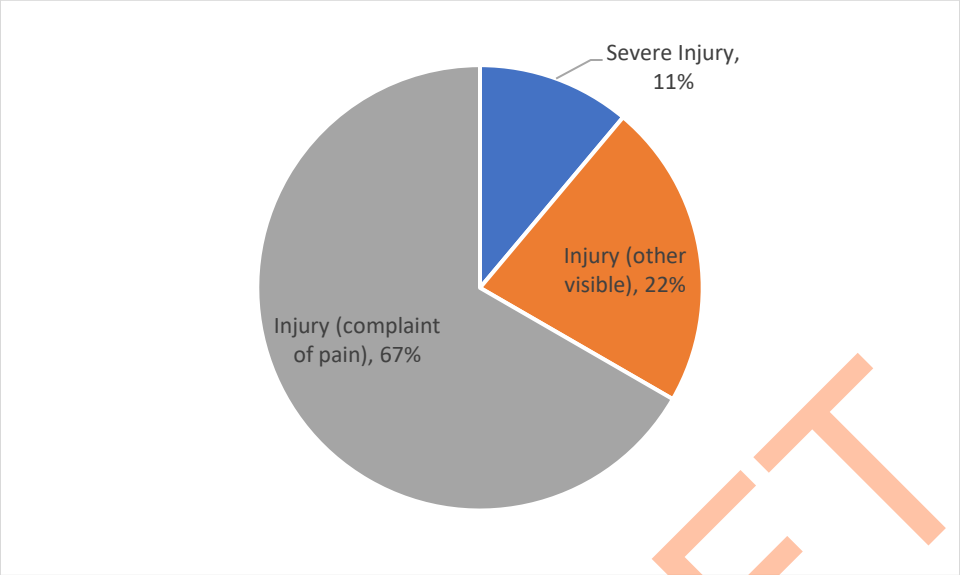

Source: UC Berkeley Transportation Injury Mapping System (TIMS).

DRAFT

Figure 5. Map of Soledad Bicycle Collisions, 2012–2021

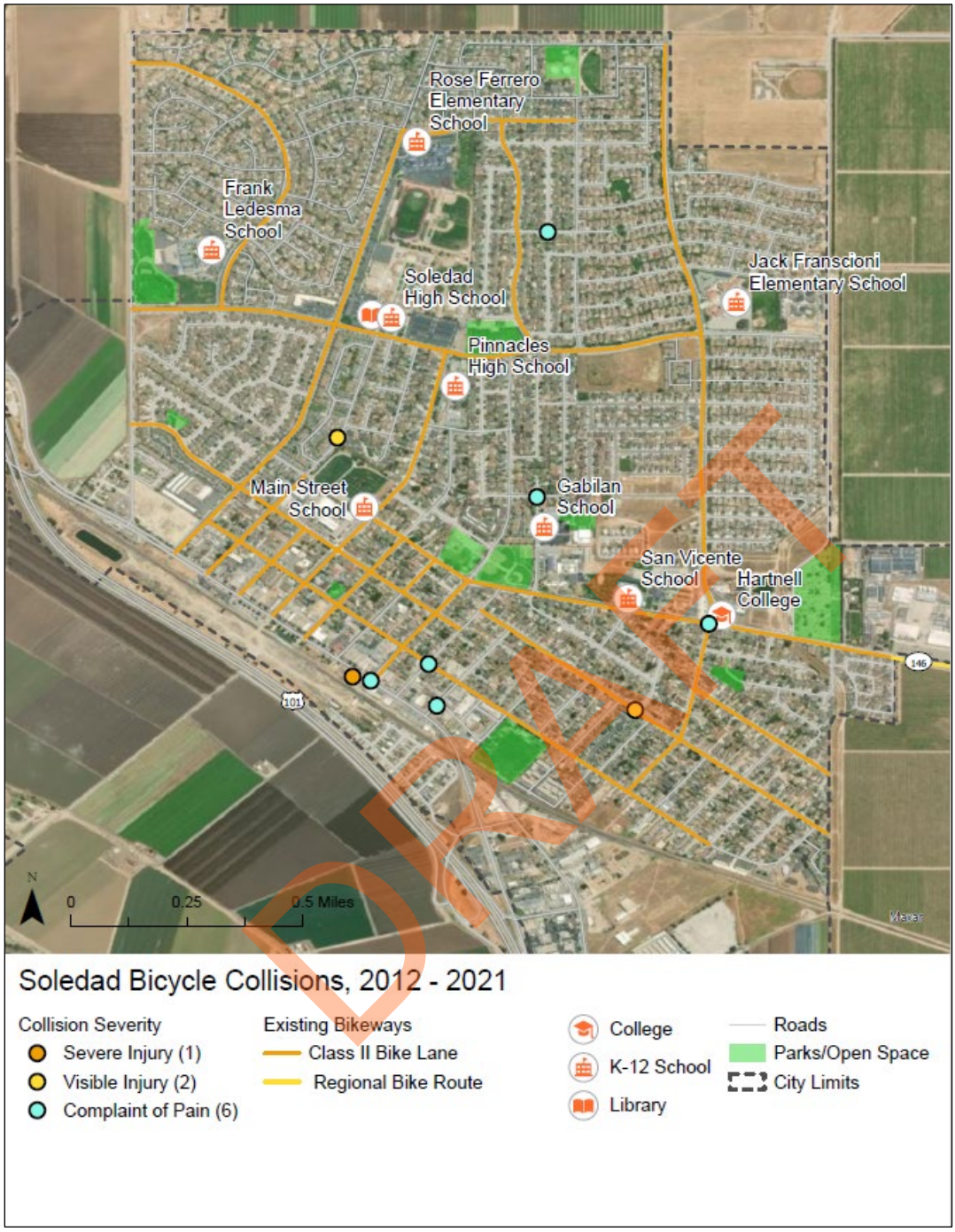

Pedestrian Safety

Over the ten-year study period, there were 37 pedestrian collisions in Soledad, with an average of nearly four per year. This increased to seven in 2018, but the upward trend did not continue. There was one fatal pedestrian collision in the ten-year period. Three collisions caused severe injuries, 10 resulted in some “other visible injury,” and 23 resulted in a “complaint of pain.”

Figure 6. Annual Pedestrian Collisions

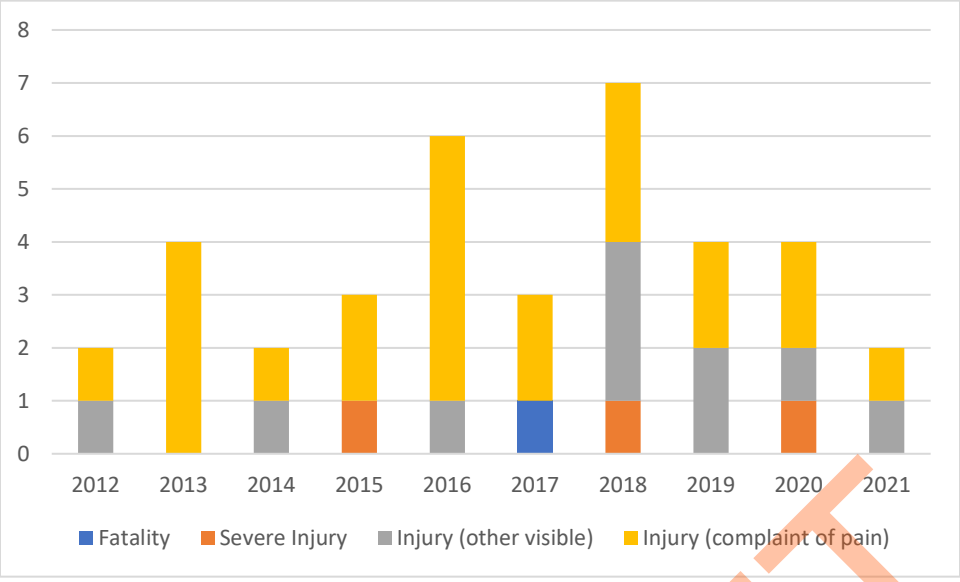

Source: UC Berkeley Transportation Injury Mapping System (TIMS).

Pedestrian Collision Trends

Pedestrian collision locations are shown in Figure 8. Key takeaways of the analysis include the following:

- **40% of fatality and severe injury collisions in Soledad involved people walking,** though only 24% of collisions involved pedestrians. Pedestrians are more likely to be killed or severely injured in collisions than drivers.

- **51% of pedestrian collisions involved youths aged 19 or younger.** Thirty-three percent involved youths under 14.

- **Monterey Street was the location with the most pedestrian collisions, with 16% of them.** Front Street was the second most common location, with 8% of pedestrian collisions. The remaining collisions were distributed throughout the City, with most occurring in the neighborhoods between Gabilan Drive and Front Street.

- **The most common type of violation,** according to the reporting law enforcement officer, was drivers' failure to yield to pedestrians at marked or unmarked crosswalks, which accounted for 38% of all collisions. The next most common violations were drivers' speed and pedestrians' failure to yield to vehicles when crossing, which both accounted for 11% of collisions. Drivers were at fault in 59% of collisions.

DRAFT

Figure 7. Severity of Pedestrian Collisions

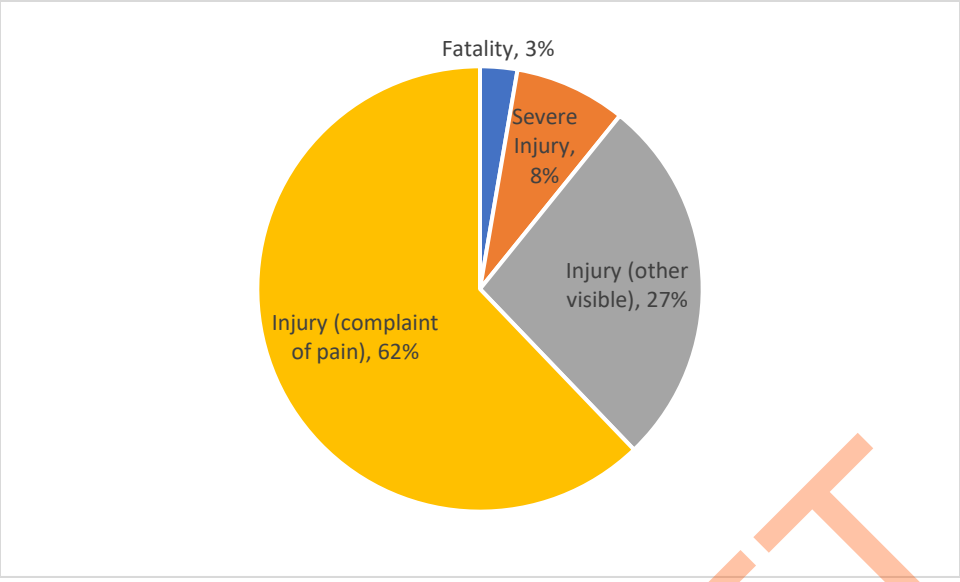

Source: UC Berkeley Transportation Injury Mapping System (TIMS).

DRAFT

Figure 8. Map of Soledad Pedestrian Collisions, 2012–2021

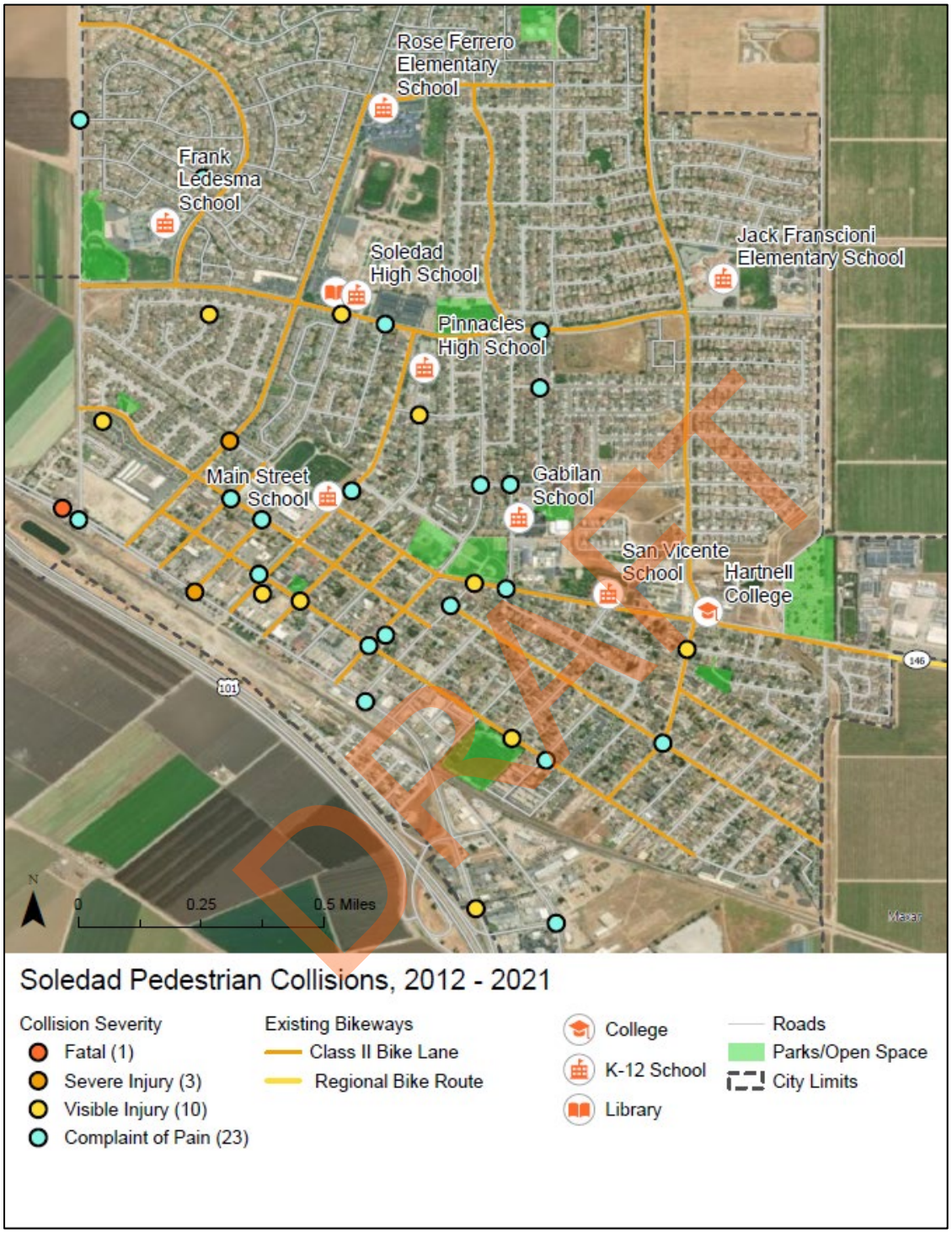

Current and Recently Completed Projects

Several projects have recently been completed or are underway to provide new bicycle and pedestrian facilities in Soledad.

Front Street Maintenance Project

In 2024, Soledad started construction of improvements on Front Street between Moranda Road and Nestles Road. This project includes roadway resurfacing, repair of existing curb, gutter, and sidewalk, tree replacement and landscaping updates, signage and striping improvements, street lighting upgrades, and art components. The project is funded with local sales tax Measure X and the American Rescue Plan (ARPA) and is expected to be completed in 2025.

HSIP Pedestrian Safety Improvements Project

Soledad received partial grant funding through the Highway Safety Improvement Program Cycles 10 and 11 to make pedestrian safety upgrades throughout the city. This includes upgrading existing crosswalks to high-visibility at intersections near five schools in Soledad. These projects are currently in the design phase, and additional funding is required before construction can take place.

West Street Road Diet

In 2023, the city of Soledad was awarded funding from TAMC for a road diet and bicycle improvements on West Street between Front Street and Gabilan Drive. The project will change the number of lanes on West Street from four to two and add buffered bike lanes, a center turn lane, and a landscaped median. The project is designed to slow traffic and was initiated in response to community concerns about speeding on West Street. The project is currently in the design phase, with construction expected in 2025.

Existing Programs

A variety of program offerings provide active transportation education and encouragement to Soledad residents. Some focus on school-aged youth, but there are also programs offering safety information, encouragement, and events for the general public.

Active Transportation Support Program

TAMC provides free racks for bicycle and skateboard parking, bike lockers, and bicycle repair stands to businesses, schools, and other organizations throughout Monterey County. The goal is to increase the amount of secure bicycle parking and ensure that it is distributed equitably throughout the county. Interested parties can apply for funding to purchase a rack at any time here: https://www.tamcmonterey.org/active-transportation-support-program.

Blue Zones Project Monterey County

Blue Zones Project is a national organization that works with communities to encourage changes that lead to healthier options for residents. Blue Zones works with governments, employers, restaurants, and school sites to encourage healthy eating, exercise, and community building. Blue Zones was launched in Monterey County in 2019 and works with schools in Soledad to encourage healthy habits. Learn more here: https://info.bluezonesproject.com/montereycounty.

DRAFT

Go 831

Go831 is a free transportation-demand management program led by the Transportation Agency for Monterey County. The program is offered countywide and provides resources and incentives for commute trips made by biking, walking, carpooling, vanpooling, or public transit. Go831 also provides resources for employers who want to start incentive programs to reduce drive-alone commute trips. Learn more here: http://www.go831.org/.

Measure X Safe Routes to Schools Program

Local sales tax Measure X, which was approved by Monterey County voters in 2016, includes $20 million for Safe Routes to Schools projects and programs through 2040. The Transportation Agency for Monterey County has developed a comprehensive Safe Routes to Schools program that offers tools, programming, and resources to schools, guardians, and communities aimed at improving safety and traffic around schools. Learn more here: https://saferoutesmonterey.org/.

Modo Youth Programs

The Bike Safe and Walk Safe programs, led by Ecology Action, provide on-the-ground training in safe walking and bicycling to second- and fifth-grade students, with the goal of empowering students and parents to walk and bike and to reduce collisions. Learn more here: https://letsmodo.org/youth-safety/.

DRAFT

Soledad Safe Routes to Schools Plan Chapter 6B. Outreach

Soledad Outreach Summary

- Parent Outreach
  - 12 presentations at virtual or in-person parent meetings
  - 208 responses to online parent survey
  - 1,824 responses to student survey
  - 0 responses to draft recommendations survey
  - Approximately 8,000+ parents reached through ParentSquare or social media
- Pilot Projects
  - 1 pilot project on Front Street
  - 119 responses to the Front Street pilot project survey
- Steering Committee
  - 20 Steering Committee members
  - 9 Steering Committee meetings
  - 246 community votes during participatory budgeting process
  - 4 projects approved for funding

DRAFT

Public Outreach

Public input was the foundation of the Safe Routes to Schools Plan and began in the fall of 2022 in Soledad. Outreach included presentations at virtual and in-person parent meetings, digital parent surveys, and tabling at community events. Walking audits were held at each school site to review current infrastructure conditions and discuss safety issues with school staff. After the draft recommendations were developed, the planning team hosted one temporary demonstration project in each city to test the draft recommendations and get feedback from the community. Finally, Steering Committees were developed in each city to lead a participatory budgeting process.

Soledad is home to many Spanish-speaking people, and enabling equitable participation was an important part of the outreach process. All outreach materials and surveys were developed in English and Spanish, and translation was available during walking audits. Parent presentations were given primarily in Spanish, and Steering Committee meetings were conducted in Spanish with English translation available.

Walking Audits

Walking audits were held at each of the eight schools in Soledad in fall 2022. Audits were held during school drop-off or pick-up to observe traffic and infrastructure conditions around the school and discuss key safety issues with school staff. School principals, community liaisons, parents, and crossing guards shared information on typical traffic patterns and safety issues for people walking and biking. These meetings were held outside, and COVID-19 protocols were maintained to ensure participants' safety.

Parent Meetings

At the beginning of planning, the team contacted school staff to request time on the agendas of scheduled virtual and in-person parent meetings, such as coffee klatches, site councils, and the English Learner Advisory Committee (ELAC). In their presentations, the team shared information about the planning process and asked parents and school staff for input on any safety issues with biking and walking around the school.

Parent and Student Surveys

An initial survey was shared with parents through school communication channels, the project's website, and social media and received 208 responses. The survey was also sent out to students and received 494 responses. The survey asked about how students typically traveled to school before COVID-19 , top concerns about letting students walk or bike to school, and current barriers to traveling to school safely.

Pilot Projects

After the draft recommendations were developed, the planning team selected one location per city for a temporary pilot project. These projects were designed to test the draft recommendations, see how the designs worked in practice, and get feedback from the community on whether they should be made permanent. See below for more information on the Soledad pilot project and community survey data.

Steering Committees

Safe Routes to School Steering Committees were formed in each of the four cities, from community representatives including students, parents, school staff, advocates, and residents. These groups met monthly for nine months and took active leadership roles in engaging the community and developing projects.

Each Steering Committee led a participatory budgeting process, a democratic process in which community members decide how to spend part of a public budget. The Transportation Agency for Monterey County allocated $250,000 per city to implement projects from the Safe Routes to Schools Plan, and Steering Committees developed a process for community members to vote on which projects should be funded.

The Soledad C developed project proposals based on the recommendations in the Safe Routes to Schools Plan and designed a process for residents to vote on the projects that were most important to them. The projects that received the most votes were recommended for funding, and Steering Committee members presented the results to the Soledad city council and received its approval in November 2023. Projects at four locations in the city were recommended for funding. The Transportation Agency board approved the city council's recommendations in February 2024. The City of Soledad will construct as many recommendations as is feasible with current construction costs. The list of projects recommended for funding in Soledad can be found in chapter 6D.

Many committee members came from communities that are traditionally underrepresented in the political process and who face obstacles to participating or who feel left out. By serving on Safe Routes to Schools Steering Committees, members gained experience in leadership and participation in local government. Steering Committees also improved connections between the planning team and each community and increased public participation in the planning. Committee members were compensated for their time to recognize the value of their work and allow for equitable participation. Dinner was

DRAFT

provided at each meeting, and childcare was provided as needed.

Front Street Pilot Project Survey Results

Highlights of the community survey data for the Front Street pilot project are provided below. The full survey data can be found in Appendix X.

The temporary installation on Front Street was located between Oak Street and Nestles Road. This section of Front Street is the only route for residents of the Santa Elena Mobile Home Park to access any of the schools in Soledad, and the only route for most residents of Soledad to access the shopping center south of Nestles Road. Front Street was selected for the pilot project because it was identified as a priority by the Soledad Steering Committee as well as community members.

At the time of the installation, there were no bicycle facilities along this section of Front Street and narrow sidewalks on both sides. The speed limit was 35 mph, but public comments indicated that drivers frequently travelled faster. The pilot project re-purposed the shoulder on Front Street to install separated bike lanes, and high-visibility crosswalks were added at the intersections of Oak Street and Nestles Road.

The Front Street pilot project was in place for one month. The planning team received 119 community survey responses during this time. The following methods were used to promote the project and collect survey responses:

- Distribution of fliers and a survey link to parents through all Soledad schools.
- Door-to-door distribution of fliers with the survey link to neighbors and businesses along Front Street.
- Mass mailings to 2,200 households in the neighborhoods around the pilot project.
- Social media posts.
- Banners and pre-stamped surveys placed along Front Street.
- Presentation to City Council before the pilot was installed.

Survey Results

- Sixteen percent of survey respondents walked or biked on Front Street during the pilot project. Eighty-five percent of respondents drove through the pilot.
- Fifty-eight percent of respondents reported having a positive experience with the high-visibility crosswalks, and 46% had positive experiences with the separated bike lanes.
- Among all respondents, 21% said that they walked or biked more because of the pilot project. Among people who walked and biked through the pilot project, 63% said that they walked or biked more during the pilot.
- Among all respondents, 37% indicated that they would like to see the temporary changes made permanent, 22% were undecided, and 40% did not want to see the changes become permanent.
- Among people who walked and biked through the pilot project, 74% wanted to see the temporary changes made permanent, 21% were undecided, and 5% said they did not want to see the changes become permanent.
- Forty-eight percent said that they would either definitely or probably use the new facility if it became permanent.

DRAFT

Figure 9. Front Street Pilot Project Survey Data (all respondents)

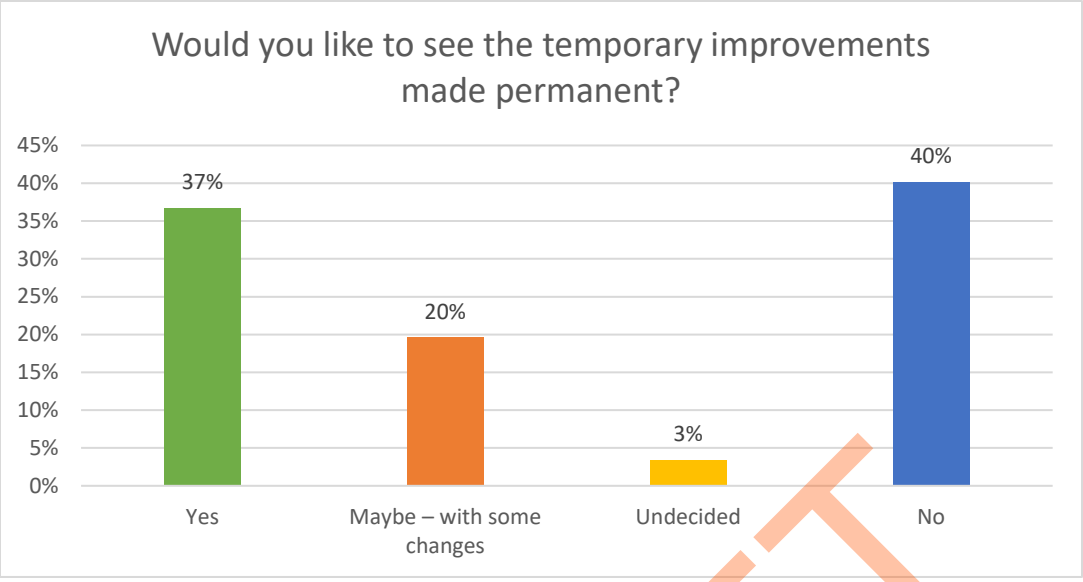

Figure 10. Front Street Pilot Project Survey Data (all respondents)

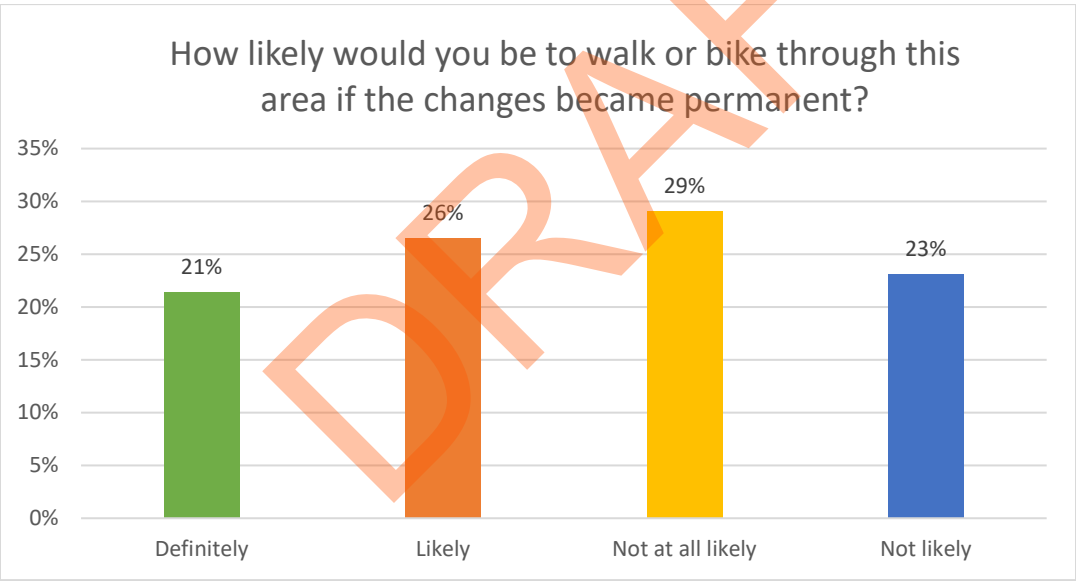

DRAFT

Next Steps

Feedback on the pilot project varied, with people who walked or biked through it expressing more support than people who drove through it. Many of the comments expressed a desire for a project that was more aesthetically pleasing.

One option for the City to pursue would be widening the sidewalk to allow pedestrians and cyclists to share space elevated from the motor vehicle lanes. The City will pursue funding for future improvements along Front Street and is currently working on a maintenance project to repave Front Street from Moranda Road to Nestles Road.

Soledad Safe Routes to Schools Plan
Chapter 6C. Recommendations

School Profiles

The school-level infrastructure recommendations in this chapter are the core of the Safe Routes to Schools Plan. They were designed to address the specific challenges at each school site to increase the safety of families walking and biking and encourage more active transportation trips to school. This chapter contains information on the current conditions at each school, observations from the walking audit, and a list of infrastructure recommendations. Schools are organized alphabetically. School-specific non-infrastructure recommendations are also listed under each school's profile, and citywide non-infrastructure recommendations are listed at the end.

A guide to the various types of infrastructure treatments mentioned in this chapter starts on page xx.

Safe Routes to Schools Corridors

Safe Routes to Schools corridors are streets that have been identified as key routes to Soledad schools. These streets may be good candidates for corridor-level improvements in the future to slow traffic, improve intersections and crossings, and create a safe and comfortable environment for students to walk and bike to school.

DRAFT

Figure 11. Map of Soledad Safe Routes to School Corridors

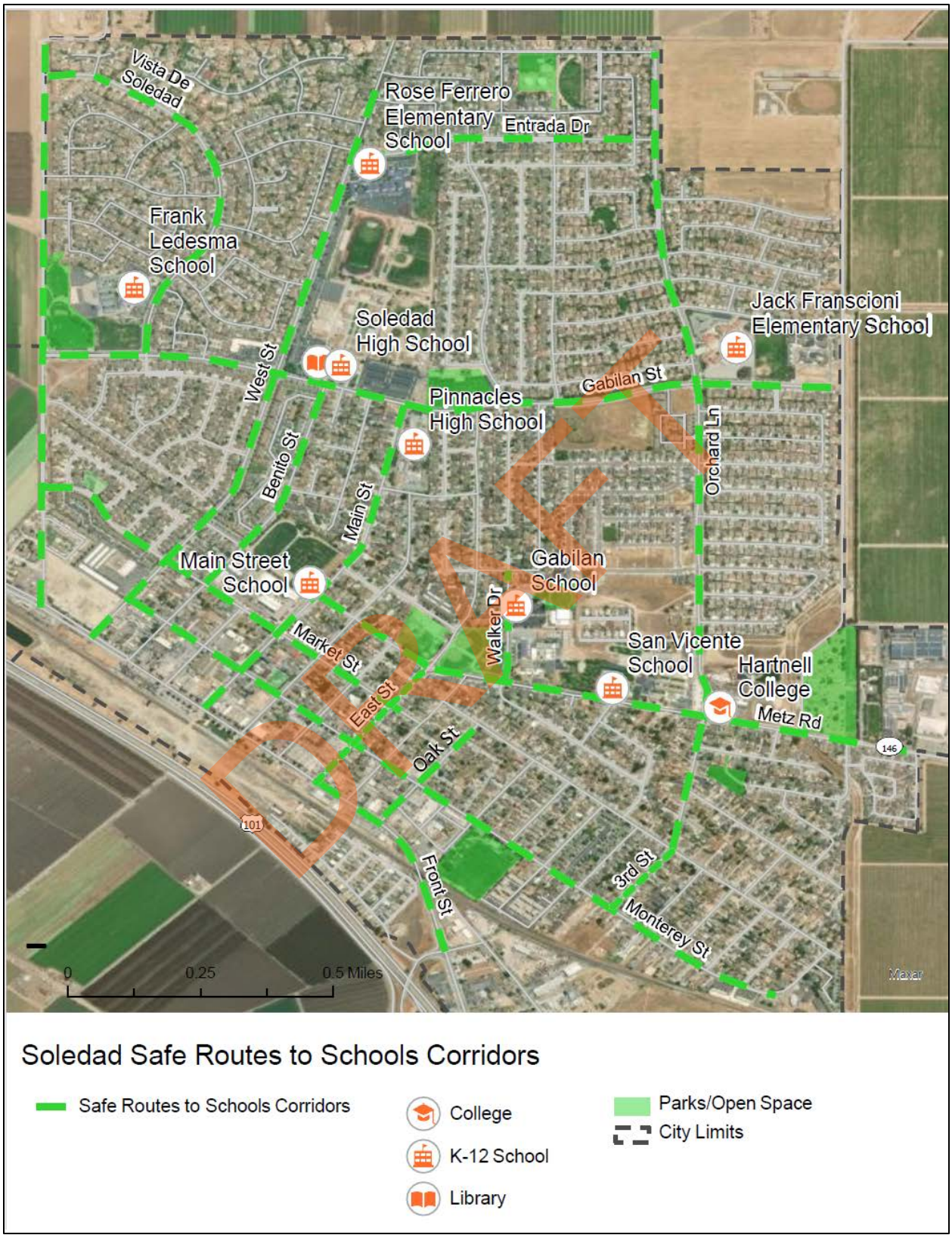

Recommendation Process

The recommendations in this Safe Routes to Schools Plan were developed in response to public input on the barriers to getting to each school site safely. Public comments from parent surveys, parent meetings, and walking audits were reviewed, and where feasible, recommendations were developed to address each issue. This process included the evaluation of existing conditions around each school.

After the draft recommendations were developed, recommendation maps in English and Spanish were shared with each school along with a short survey asking for feedback. Each school was also offered another round of bilingual parent presentations to share the draft recommendations and collect feedback from parents and school staff. The planning team reviewed the feedback on the draft recommendations and adjusted them where feasible.

All recommendations are planning-level and require further analysis before construction. All recommendations for new marked traffic control devices, including crosswalks, must also meet the guidelines of the California Manual of Uniform Traffic Control Devices policies to be installed.

Guide to Bicycle & Pedestrian Infrastructure Recommendations

- **Bike lane conflict markings** are used to highlight "conflict zones," where traffic lanes and bike lanes cross. This helps drivers know where to expect people on bikes.
- **Class I shared use paths** are paved rights-of-way, completely separated from streets, which support multi-use recreation and transportation opportunities for walkers, bicyclists, skaters, and wheelchair users.
- **Class II bike lanes** are on-street bicycle facilities that use striping and stencils to designate spaces for bicycle travel.
- **Class IIB buffered bicycle lanes** include a striped buffer between the bike lane and the vehicle lane, which provides greater separation and comfort for people biking.
- **Class III bicycle routes** are designated for bicycle travel with signage and shared-use pavement markings, or "sharrows," and are shared with motor vehicles.
- **Class IV separated bikeways or cycle tracks** are separated from the vehicle lane by a physical barrier, such as parked cars, planters, or plastic posts, providing greater safety for bicyclists.
- **Curb extensions** are additions to the sidewalk installed at intersections or mid-block crosswalks to shorten the crossing distance and make pedestrians more visible to drivers.
- **Flashing stop signs** have flashing lights embedded on them to increase their visibility.
- **High-visibility crosswalks**, or "ladder style" crosswalks, are more visible to drivers than crosswalks consisting of just two lines.
- **Neighborhood traffic circles** are small roundabouts installed on neighborhood streets to slow traffic and create a safer and more comfortable environment for people walking and biking.
- **Pedestrian hybrid beacons** are lights used to control traffic at unsignalized locations to help pedestrians cross the street. They are often used on larger roadways with three or more lanes.
- **Pedestrian refuge islands** are protected spaces in the center of a crosswalk that reduce crossing and pedestrians' exposure to vehicle traffic.
- **Protected intersection treatments** keep bicyclists physically separate from motor vehicles up to the intersection, which provides more comfort and safety for people of all ages and abilities.

DRAFT

- **Rectangular rapid flashing beacons (RRFBs)** are used at uncontrolled intersections or mid-block crosswalks to alert drivers to people waiting to cross the street.
- **Roundabouts** are circular intersections where drivers travel counterclockwise around a center island. They have been shown to reduce crashes and improve safety for people walking.
- **Shared-lane markings ("sharrows")** are used on streets where bicycles and motor vehicles share the same travel lane. Sharrows direct bicyclists to the safest position in the roadway, alert drivers that bicyclists may be sharing the lane, and encourage safe passing of bicyclists by motorists.
- **Traffic calming** consists of various measures such as speed humps, traffic circles, and chicanes used to slow vehicle traffic on residential streets and improve safety and conditions for walkers and bicyclists. Traffic calming measures must be requested and supported by neighborhood residents in order to be installed.

Citywide Bicycle and Pedestrian Network Recommendations

The map below shows existing bicycle and pedestrian facilities along with recommendations for bicycle and pedestrian corridor improvements throughout Soledad. A description of each facility type can be found above.

#	Street	Cross Street 1	Cross Street 2	Recommendation
	West Street	Front Street	Gabilan Drive	Reduce travel lanes from four to two, with landscaped median.
	West Street	Front Street	End of Street	Install separated bikeway.
	San Vicente Road	Vista de Soledad	Market Street	Install a shared-use path on the east side of San Vicente Road.
	Market Street	San Vicente Road	Dixi Street	Install buffered bike lanes.
	Monterey Street	West Street	8th Street	Install buffered bike lanes.
	Gabilan Drive	San Vicente Road	Rojos Way	Study feasibility of road diet along entire street.
	Gabilan Drive	San Vicente Road	Rojos Way	Install separated bikeway.
	Orchard Lane	Terraza Street	Metz Road	Install separated bikeway.
	Front Street	Oak Street	Nestles Road	Widen sidewalk. Consider raised class IV bicycle lanes at the level of the sidewalk.
	Front Street	East Street	Oak Street	Install buffered bike lanes.
	Front Street	East Street	San Vicente Road	Install sharrows and bike route signage.
	Front Street	Oak Street	Nestles Road	Study options to construct bicycle and pedestrian bridge across rail line between the Santa Elena

DRAFT

				Mobile Home Park and Front Street.
	Kidder Street	Front Street	North Street	Install bike lanes on east side of street.
	Oak Street	Front Street	Palm Avenue	Install sharrows and bike route signage.
		Nestles Road	4th Street	Install ADA-compliant curb ramps on the southwest and northeast corners of the intersection.
		Nestles Road	4th Street	Install high-visibility crosswalks on the north and west legs of the intersection.
		Nestles Road	4th Street	Install curb extensions on the northwest and the southwest corners of the intersection.
		Front Street	Oak Street	Install high-visibility crosswalks and curb extensions.
		Nestles Road	Front Street	Install high-visibility crosswalks on the north, east, and west legs of the intersection.
		Oak Street	Front Street	Install high-visibility crosswalks on the north and east legs of the intersection.
		East Street	Front Street	Install high-visibility crosswalks on the north and west legs of the intersection.
		East Street	Front Street	Install curb extension on the northwest corner of the intersection.
	Metz Road	Orchard Lane	East Street	Study long-term options for moving the bike lane to be next to the curb, to prevent drivers from crossing the bike lane to park. This could mean creating space on the curb extensions for the bike lane to continue, similarly to the bike lane at the Metz Road/East Street roundabout.
	Metz Road	Orchard Lane	East Street	In the short term, paint the bike lane green in conflict zones like those in front of school loading zones and parking lots.

DRAFT

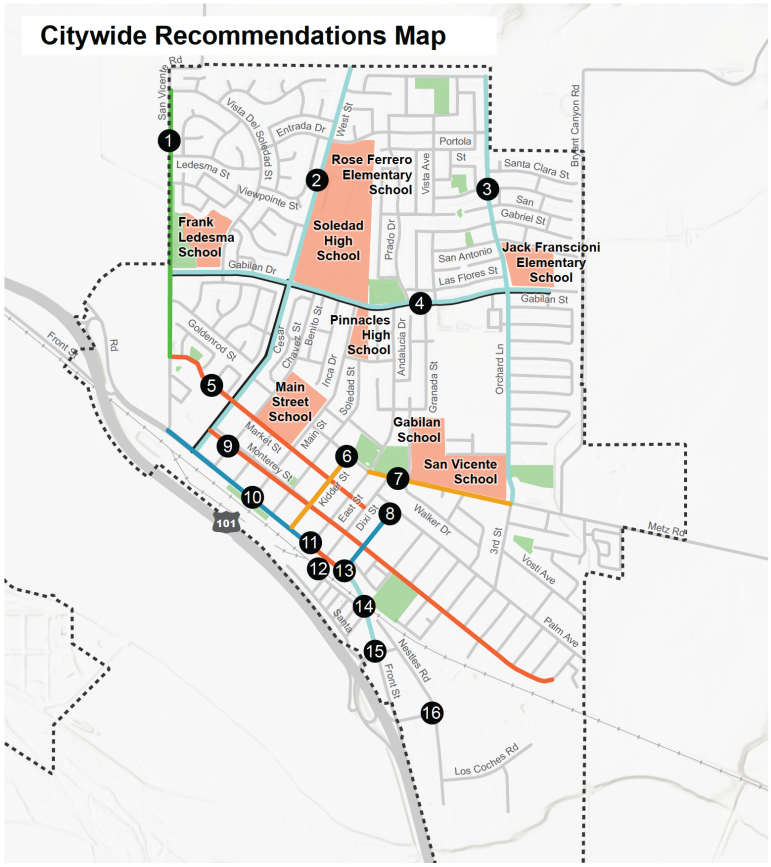

CORRIDOR RECOMMENDATIONS

- Class I Shared-Use Path
- Class II Bike Lane
- Class IIB Buffered Bike Lane
- Class III Bike Route
- Class IV Protected Bike Lane
- Traffic Calming

BOUNDARIES

- School Property
- City Limits
- Parks

Recommendations

1. **San Vicente Rd from Vista De Soledad to Market St:** Install a shared-use path on the east side of San Vicente Road.
2. **West St between Front St and end of Street:** Install separated bikeway along the length of West Street. Reduce travel lanes from four to two lanes with landscaped median from Front Street to Gabilan Drive.
3. **Orchard Ln between Terraza St and Metz Rd:** Install separated bikeway.
4. **Gabilan Dr between San Vicente Rd and Rojos Way:** Install separated bikeway. Study feasibility of road diet along the entire street.
5. **Market St between San Vicente Rd and Dixi St:** Install buffered bike lanes.
6. **Kidder St between Front St and North St:** Install bike lanes on the east side of Kidder Street.

Continued on the next page

N 0 0.35 0.7 MILES alta

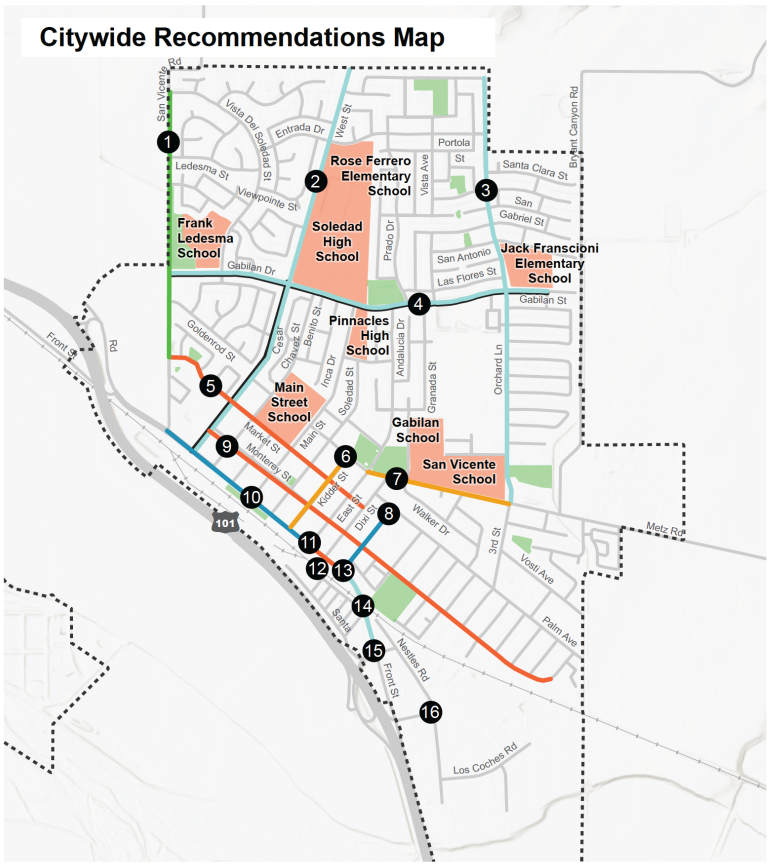
Citywide Recommendations Map
Rose Ferrero Elementary School
Soledad High School
Frank Ledesma School
Pinnacles High School
Main Street School
Gabilan School
San Vicente School
Jack Franscioni Elementary School
Vista De Soledad St
Entrada Dr
West St
Portola St
Santa Clara St
Bryant Canyon Rd
Ledesma St
Viewpointe St
San Gabriel St
Prado Dr
Vista Ave
San Antonio
Las Flores St
Gabilan St
Gabilan Dr
Goldenrod St
Cesar Chavez St
Benito St
Inca Dr
Andalucia Dr
Granada St
Orchard Ln
Soledad St
Main St
Market St
Monterey St
Kidder St
East St
Dos St
Walker Dr
3rd St
Vosti Ave
Palm Ave
Metz Rd
Nestles Rd
Los Coches Rd
Front St
San Vicente Rd
101
1
2
3
4
5
6
7
8
9
10
11
12
13
14
15
16
CORRIDOR RECOMMENDATIONS
Class I Shared-Use Path
Class II Bike Lane
Class IIB Buffered Bike Lane
Class III Bike Route
Class IV Protected Bike Lane
Traffic Calming
BOUNDARIES
School Property
City Limits
Parks
Recommendations (continued)
7 Metz Rd between Orchard Ln and East St: Short term- Paint the bike lane with green markings in conflict zones, such as in front of school loading zones and parking lots. Long term- Explore options for relocating the bike lanes to be adjacent to the curb to prevent drivers from crossing the bike lane when parking. This may include incorporating space on the curb extensions to allow the bike lane to continue, similar to the design at the Metz Road/East Street roundabout.
8 Oak St between Front St and Palm Ave: Install sharrows and bike route signages.
9 Monterey St between West St and 8th St: Install buffered bike lanes.
10 Front St between East St and San Vicente Rd: Install sharrows and bike route signages.
11 Front St and East St: Install high-visibility crosswalks on the north and west legs of the intersection. Install a curb extension on the northwest corner of the intersection.
Continued on the next page
N
0
0.35
0.7 MILES
alta

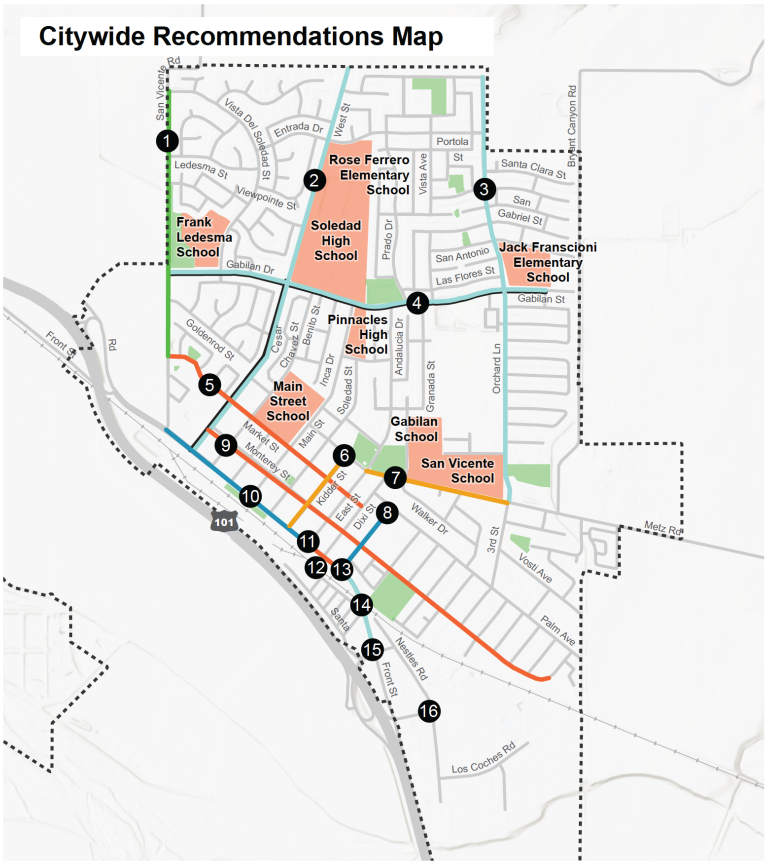

CORRIDOR RECOMMENDATIONS

- Class I Shared-Use Path
- Class II Bike Lane
- Class IIB Buffered Bike Lane
- Class III Bike Route
- Class IV Protected Bike Lane
- Traffic Calming

BOUNDARIES

- School Property
- City Limits
- Parks

Recommendations (continued)

12 **Front St between East St and Oak St:** Install buffered bike lanes.

13 **Oak St and Front St:** Install high-visibility crosswalks on the north and east legs of the intersection. Install curb extensions.

14 **Front St between Oak St and Nestle Rd:** Widen the sidewalk. Consider installing raised Class IV separated bike lanes at sidewalk level. Study options to construct a bicycle and pedestrian bridge across the rail line between Santa Elena Mobile Home Park and Front Street.

15 **Nestles Rd and Front St:** Install high-visibility crosswalks on the north, east, and west legs of the intersection.

16 **Nestles Rd and 4th St:** Install high-visibility crosswalks on the north and west legs of the intersection. Install ADA-compliant curb ramps and curb extensions on the southwest and the northwest corners of the intersection.

N 0 0.35 0.7 MILES alta

Frank Ledesma Elementary

Frank Ledesma Elementary School is located at the western edge of Soledad, and it draws students primarily from the surrounding neighborhoods (see Figure 12).

Grade levels	Number of students	Students qualifying for free or reduced meals	Students residing within 1 mile of school	Students using active transportation (based on 48 survey responses)
K–6	488	90.4%	82%	38%

Figure 12. Map of Frank Ledesma Elementary School Area

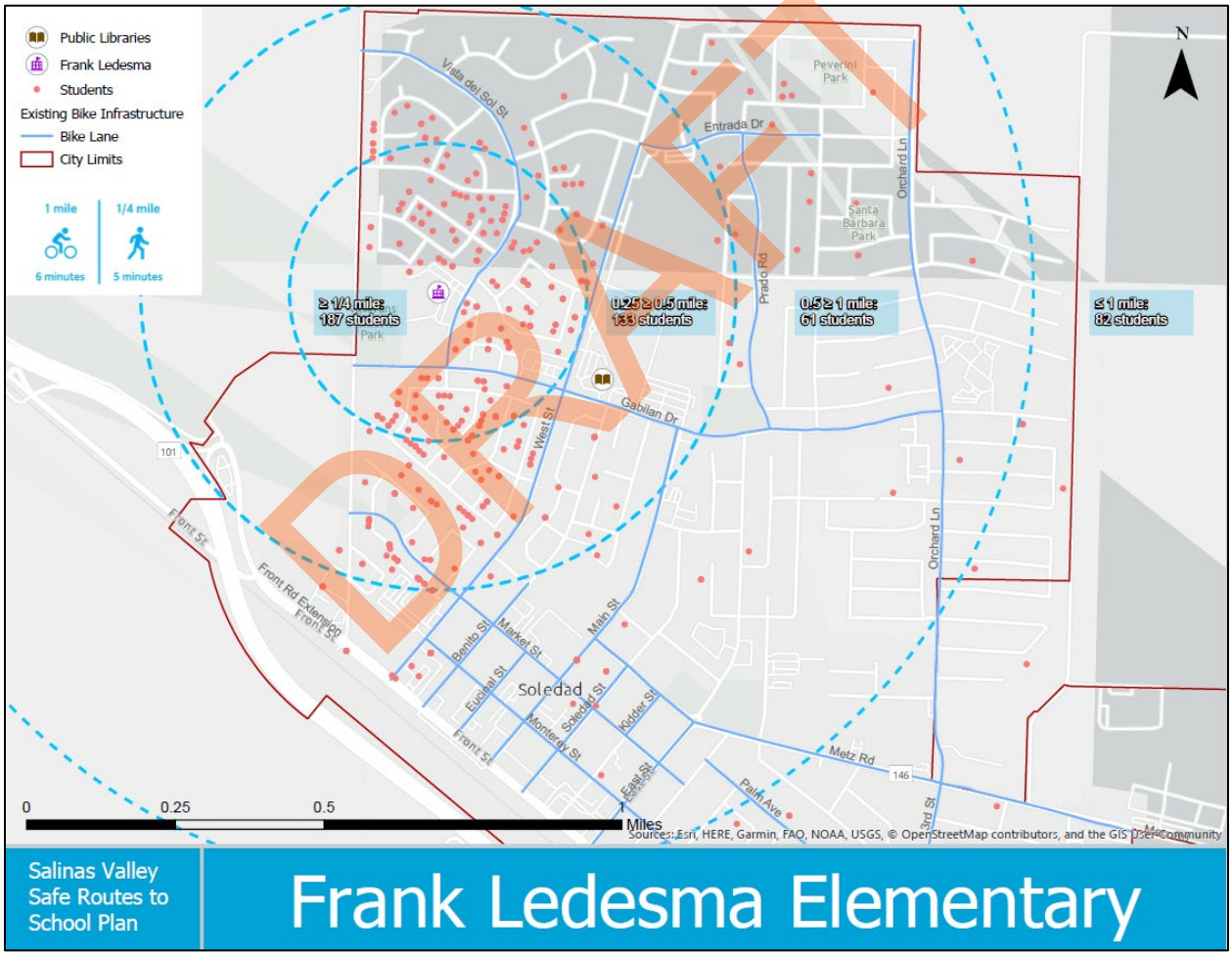

DRAFT

Parent Survey

Frank Ledesma Elementary School parents were asked to complete a bilingual survey about their attitudes toward walking and biking to school in the fall of 2022, and 48 responses were received. The full survey report is in Appendix X.

The survey asked parents to select the most important factors in their decisions whether to allow their children to walk or bike to school. The top issues for parents are listed in the graph below.

Figure 13. Parents' Concerns about Children Walking or Biking to School (respondents could select more than one)

Top Concerns	Frank Ledesma Elementary
Amount of traffic along route	36%
Speed of traffic along route	32%
Time	28%
Child's before- or after-school activities	28%
Distance	24%
Safety of intersections and crossings	24%
Convenience of driving	24%
Weather or climate	24%

Current Infrastructure Conditions

Motorist Conditions

- Frank Ledesma Elementary has two parking areas and two drop-off loops off Vista de Soledad. Parking spaces in the lot are reserved for staff and visitors.
- At the time of the audit, the drop-off area at the front of the school was closed to parent vehicles in the morning, and the drop-off loop on the north side of campus was open. After school, the front drop-off area was open and the north drop-off loop was reserved for buses.
- Drop-offs take place in the drop-off loops and employee parking lot, and on the street on Vista de Soledad. There is some congestion before and after school, primarily because of slow traffic flow within the loop.
- School bus drop-off takes place in the drop-off loop on the north side of campus.
- Gabilan Drive is a primary emergency response route. During the audit, some parents parked on the north side of Gabilan Drive and walked in with their students.
- Many parents dropped off students on both sides of Vista de Soledad near the school.

Pedestrian Conditions

- There are complete sidewalks on both sides of Vista de Soledad.
- The intersection of Vista de Soledad and Gabilan Drive is a four-way stop with high-visibility crosswalks. Pedestrians crossing Gabilan Drive must cross five lanes of traffic.
- There are no marked crosswalks across Vista de Soledad between Gabilan Drive and Franscioni Street, past the school driveways. The intersection of Vista de Soledad at Franscioni Street is not stop-controlled and has high-visibility yellow crosswalks in place.
- At the time of the audit, there were no crossing guards present.

Bicycling Conditions

- There are class II bike lanes on both sides of Vista de Soledad and Gabilan Drive.

DRAFT

Recommended Infrastructure Improvements around Frank Ledesma Elementary School

Table 1 lists recommendations for Frank Ledesma Elementary School, and the map below shows their locations in relation to the school.

Table 1. Recommendations for Frank Ledesma Elementary

#	Street	Cross Street 1	Cross Street 2	Issue	Recommendation
	Vista de Soledad	San Vicente Road	Gabilan Way	Concerns about traffic speeds.	Install chokers along length of street.
		Vista de Soledad	Gabilan Drive	Key route to school, concerns about drivers not yielding to people crossing.	Conduct intersection improvement study. If a roundabout is not feasible, install curb extensions on northeast and northwest corners of the intersection.
		Vista de Soledad	Gabilan Drive	Key route to school, concerns about drivers not yielding to people crossing.	Install two flashing stop signs at each Gabilan Drive approach.
		San Vicente Road	Gabilan Drive	Concerns about drivers not yielding to people crossing.	Conduct intersection improvement study at this location.
		School driveway (south exit)		Drivers entering through parking lot exit.	Install "Do not enter" signage at parking lot exit.
		School parking lot		Lot is narrow, and there are near misses with drivers pulling in and out of parking spots who don't see other cars or students walking by.	Consider closing the parking lot and only allowing drop-off and pick-up in front of the entrance. In the longer term, consider staffing the parking lot with monitors who can direct parents where to park and when to exit to prevent vehicles from pulling out at all times.
		School driveway exit		Left turns back up traffic in lot.	Designate one of the parking lot exits as right-turn only, with the other allowing left turns, to better continue traffic flow.
		School driveway		Traffic backs up in lot when bus drivers have to	Station a staff member or volunteer to monitor the cones

DRAFT

		bus loop		move cones.	in the school driveway loop to allow bus drivers into the bus loop. This can prevent traffic backups when bus drivers would have to park and move the cones themselves.
		Vista de Soledad	Franscioni Street	Main school crosswalk. Reports of drivers not yielding to pedestrians.	Install curb extensions on the northeast, northwest, and southeast corners of the intersection. Consider quick-build curb extensions.
		Vista de Soledad	Franscioni Street	Main school crosswalk. Reports of drivers not yielding to pedestrians.	Install RRFBs at the north and east crosswalks.
	San Vicente Road	Vista de Soledad	Market Street	No bike facilities. Students traveling to school.	Install a shared-use path on the east side of San Vicente Road.
	Gabilan Drive	San Vicente Road	Rojos Way	Concerns about student safety while crossing four lanes of traffic. Gaps in bike facilities.	Study feasibility of road diet along entire street.
	Gabilan Drive	San Vicente Road	Rojos Way	Standard bike lanes provide less safety and can be uncomfortable for many people, especially when located next to higher speed roadways.	Install separated bikeway.

DRAFT

Frank Ledesma School SRTS Recommendations Map

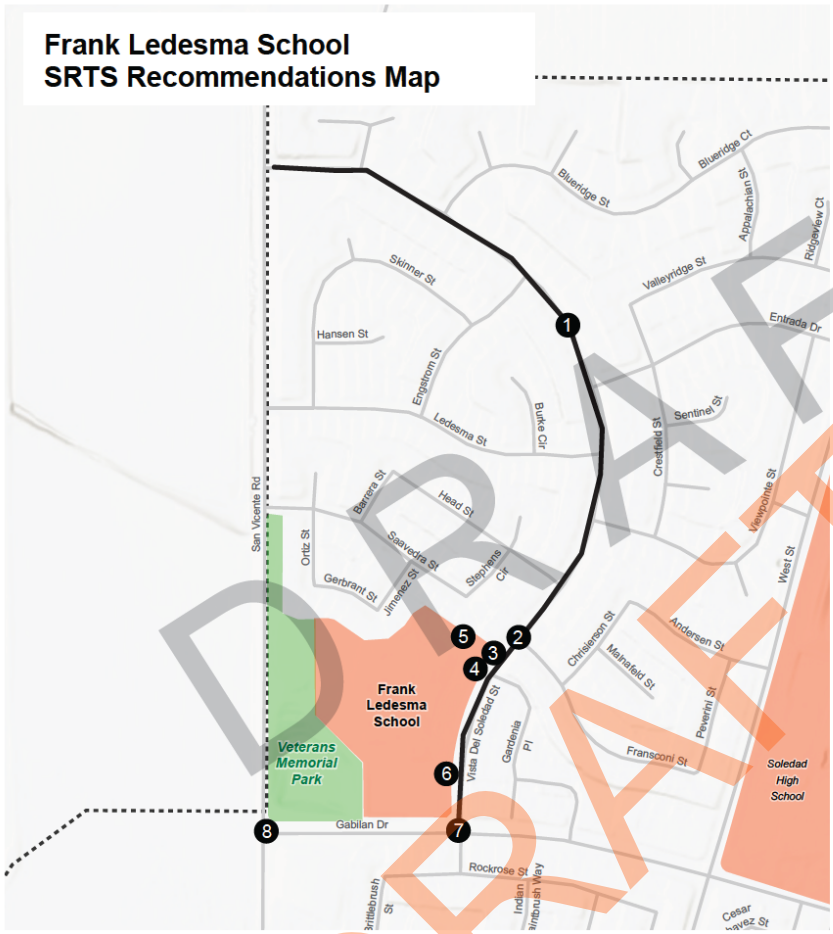

LINEAR RECOMMENDATIONS

Traffic Calming

BOUNDARIES

School Property City Limits

Parks

Recommendations

1. **Vista De Soledad St between San Vicente Rd and Gabilan Dr:** Install midblock chokers along length of street to prevent speeding and u-turns behaviors near the school.
2. **Vista De Soledad St and Franscioni St:** Install Rectangular Rapid Flashing Beacon (RRFB) on the north and east crosswalks. Install curb extensions* on the northeast, northwest, and southeast corners of the intersection.
   *Consider quick-build curb extensions.
3. **School Driveway Bus Loop:** Station a staff member or volunteer to manage the cones at the school driveway loop to allow bus drivers access to the bus loop. This will help prevent traffic backups caused when bus drivers have to park and move the cones themselves.
4. **School Driveway Exit:** Designate one of the parking lot exits as "Right Turn Only," while allowing left turns at the other exit to improve traffic flow.

Continued on the next page

0 0.1 0.2 MILES

alta

DRAFT

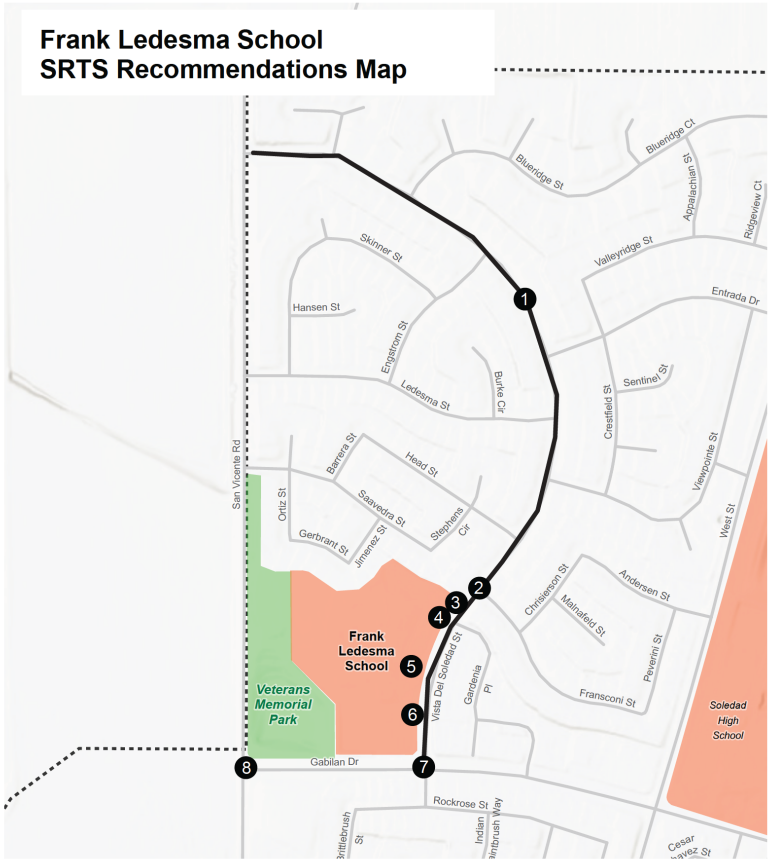

CORRIDOR RECOMMENDATIONS

Traffic Calming

BOUNDARIES

School Property

City Limits

Parks

Recommendations (Continued)

5 **School Parking Lot:** Consider closing the school parking lot and only allowing drop-off/ pick-up in the areas in front of the entrance. In the longer term, consider staffing the parking lot with monitors to direct parents on where to park and when to exit, preventing vehicles from pulling out at all times.

6 **School Parking Lot Exit:** Install a "Do Not Enter" signage at the school parking lot exit.

7 **Gabilan Dr and Vista De Soledad St:** Install 2 flashing stop signs at each Gabilan Drive approach. Conduct intersection improvement study for a roundabout at this location. If a roundabout is found to be infeasible, install curb extensions on the northeast and northwest corners of the intersection.

8 **San Vicente Rd and Gabilan Dr:** Conduct intersection improvement study for a roundabout at this location.

N

0 0.1 0.2 MILES

alta

Gabilan Elementary

Gabilan Elementary School is located in central Soledad adjacent to the Soledad Recreational Center, and it draws students primarily from the surrounding neighborhoods (see Figure 14).

Grade levels	Number of students	Students qualifying for free or reduced meals	Students residing within 1 mile of school	Students using active transportation (based on 28 survey responses)
K–6	488	92.8%	92%	21%

Figure 14. Map of Gabilan Elementary School Area

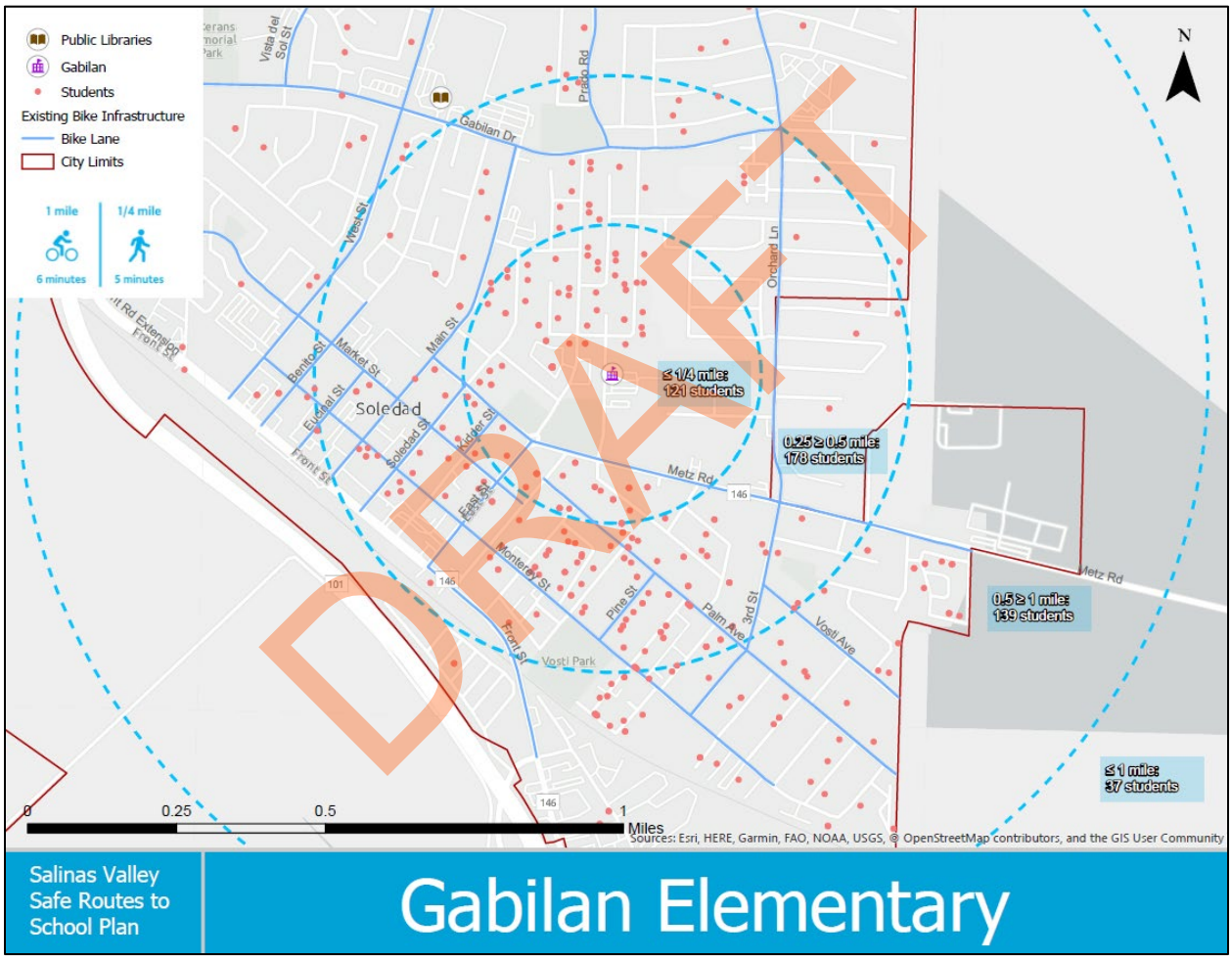

Parent Survey

Gabilan Elementary School parents were asked to complete a bilingual survey about their attitudes toward walking and biking to school in the fall of 2022, and 28 responses were received. The full survey report is in Appendix X.

The survey asked parents to select the most important factors in their decisions whether to allow their

children to walk or bike to school. The top issues for parents are listed in Figure 15, below.

Figure 15. Parents' Concerns about Children Walking or Biking to School (respondents could select more than one)

Top Concerns	Gabilan Elementary
Amount of traffic along route	52%
Speed of traffic along route	44%
Distance	44%
Safety of intersections and crossings	44%
Time	36%

Current Infrastructure Conditions

Motorist Conditions

- Gabilan Elementary School has a drop-off loop off Walker Drive and a parking lot immediately north of the loop. Parking spaces in the lot are reserved for staff and some visitors.
- At the time of the audit, drop-offs took place in the drop-off loop and curbside along Walker Drive and Metz Road. There is congestion on Walker Drive before and after school.
- School bus drop-off takes place on a designated bus loop off Metz Road.
- Metz Road is an arterial street, part of the city's truck route network, and a primary emergency response route.

Pedestrian Conditions

- There are complete sidewalks on both sides of Walker Drive and Metz Road.
- The intersection of Walker Drive and Metz Road is a four-way stop with high-visibility crosswalks on Walker Drive and an offset high-visibility crosswalk with a pedestrian refuge island across Metz Road.
- There is a crosswalk with curb extensions across Walker Drive just north of the school campus that connects to a path through Jesse Gallardo Park.
- At the time of the audit, there was a crossing guard at the crosswalk north of campus on Walker Dr and one at the Walker Drive and Metz Road intersection.

Bicycling Conditions

- There are class II bike lanes on both sides of Metz Road. There are no bicycle facilities on Walker Drive or other neighborhood streets.

Recommended Infrastructure Improvements around Gabilan Elementary School

Table 2 lists recommendations for Gabilan Elementary School, and the map below shows their locations in relation to the school.

DRAFT

Table 2. Recommendations for Gabilan Elementary

#	Street	Cross Street 1	Cross Street 2	Issue	Recommendation
		Park Street	Monterey Street	Reports of drivers not yielding to people crossing the street.	Install stop signs on the east and west legs of the intersection.
		Park Street	Monterey Street	No marked crosswalks. Reports of drivers not yielding to people crossing the street.	Install high-visibility crosswalks on all legs of the intersection.
		Park Street	Monterey Street	Reports of drivers not yielding to people crossing the street.	Install curb extensions on all corners of the intersection. Consider quick-build curb extensions.
		Oak Street	Monterey Street	Pedestrian route to school.	Install high-visibility crosswalks on all legs of the intersection.
		Oak Street	Monterey Street	Pedestrian route to school.	Install curb extensions on all corners of the intersection. Consider quick-build curb extensions.
		Dixi Street	Monterey Street	Pedestrian route to school. Project identified in Local Roadway Safety Plan.	Install RRFB at east leg of intersection.
		Dixi Street	Monterey Street	Pedestrian route to school.	Install high-visibility crosswalk at east leg of the intersection.
		East Street	Monterey Street	Pedestrian route to school.	Install high-visibility crosswalks on all legs of the intersection.
		East Street	Monterey Street	Pedestrian route to school. Project identified in Local Roadway Safety Plan.	Install curb extensions on the northeast and southeast corners of the intersection.* Consider quick-build curb extensions.
		Dixi Street	Palm Avenue	Pedestrian route to school. Pedestrian collision at this intersection.	Install high-visibility crosswalks on the north and east legs of the intersection.
		Dixi Street	Palm Avenue	Pedestrian route to school. Pedestrian collision at this intersection.	Install ADA-compliant curb ramps on the northeast and southeast corners of the intersection.
		Walker Drive	Metz Road	Reports of drivers not yielding to people crossing the street.	Install an RRFB at the east leg of the intersection.
		Walker Drive	Metz Road	Reports of drivers not yielding to people crossing the street.	Install stop bars at the north and south legs of the intersection.

DRAFT

		Dixi Street	Metz Road	Pedestrian route to school. Pedestrian collision at this intersection.	Install high-visibility crosswalk on the south leg of the intersection.
		East Street	Metz Road	Reports of drivers speeding through roundabout and not yielding to people crossing.	Work with the police department and schools to distribute flyers about how to properly use a roundabout.
		Soledad Community Center		Parents dropping off students across Walker Dr, students running across street in traffic to get to school.	Create program to encourage parents to park in the community center parking lot to drop-off and pick-up their students, rather than parking on Walker Drive
		Gabilan Driveway Loop		Students dropped off in outer loop are walking across traffic to reach sidewalk.	Consider closing one lane of driveway loop to prevent students from walking between cars. This could also slow drop-off and pick-up and encourage more parents to use the park-and-walk system at the community center.
		Andalucia Drive	Ticino Street	Reports of drivers not yielding to pedestrians.	Install high-visibility crosswalks on the west and south legs of the intersection.
		Andalucia Drive	Granada Street	Pedestrian route to school.	Install high-visibility crosswalks on the east, west, and south legs of the crosswalk.
	Kidder Street	Front Street	North Street	No bike facilities.	Install bike lanes on east side of street.
	Oak Street	Front Street	Palm Avenue	No bike facilities.	Install sharrows and bike route signage.
	Metz Road	Orchard Lane	East Street	Driver observed pulling over to the curb without checking for student in the bike lane, nearly causing a collision.	Study long-term options for moving the bike lane to be next to the curb to prevent drivers from crossing the bike lane to park. This could mean creating space on the curb extensions for the bike lane to continue, similarly to the bike lane at the Metz Road/East Street roundabout.
	Metz Road	Orchard Lane	East Street	Driver observed pulling over to the curb without checking for student in the bike lane, nearly causing a collision.	In the short term, paint the bike lane green in conflict zones, like in front of school loading zones and parking lots.

***The City's priority is safety improvements at uncontrolled intersections. Curb extensions at stop-controlled intersections are a lower priority for installation.**

DRAFT

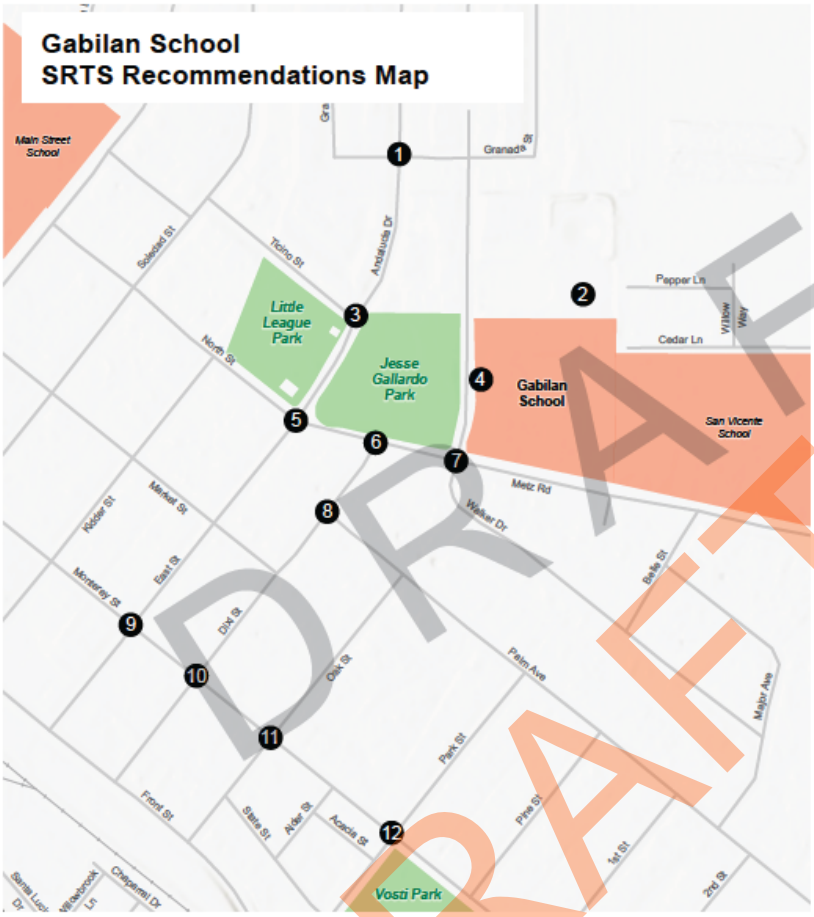

BOUNDARIES

School Property City Limits

Parks

Recommendations

1. **Granada St and Andalucia Dr:** Install high-visibility crosswalks on the east, west, and south legs of the crosswalk.
2. **Soledad Community Center:** Create a program encouraging parents to park in the community center parking lot to drop-off/pick-up their students, rather than parking on Walker Drive.
3. **Andalucia Dr and Ticino St:** Install high-visibility crosswalks on the west and south legs of the intersection.
4. **Gabilan Driveway Loop:** Consider closing one lane of the driveway loop to prevent students from walking in-between cars. This can also slow down drop-off/pick-up traffic and can encourage more parents to utilize the park and walk system at the community center.
5. **East St and Metz Rd:** Work with the police department and schools to distribute flyers about how to properly use a roundabout.
6. **Dixi St and Metz Rd:** Install a high-visibility crosswalk on the south leg of the intersection.
7. **Walker Dr and Metz Rd:** Install Rectangular Flashing Beacon (RRFB) on the east leg of the intersection. Install stop bars on the north and south legs of the intersection.

Continued on the next page

0 0.09 0.17 MILES

alta

DRAFT

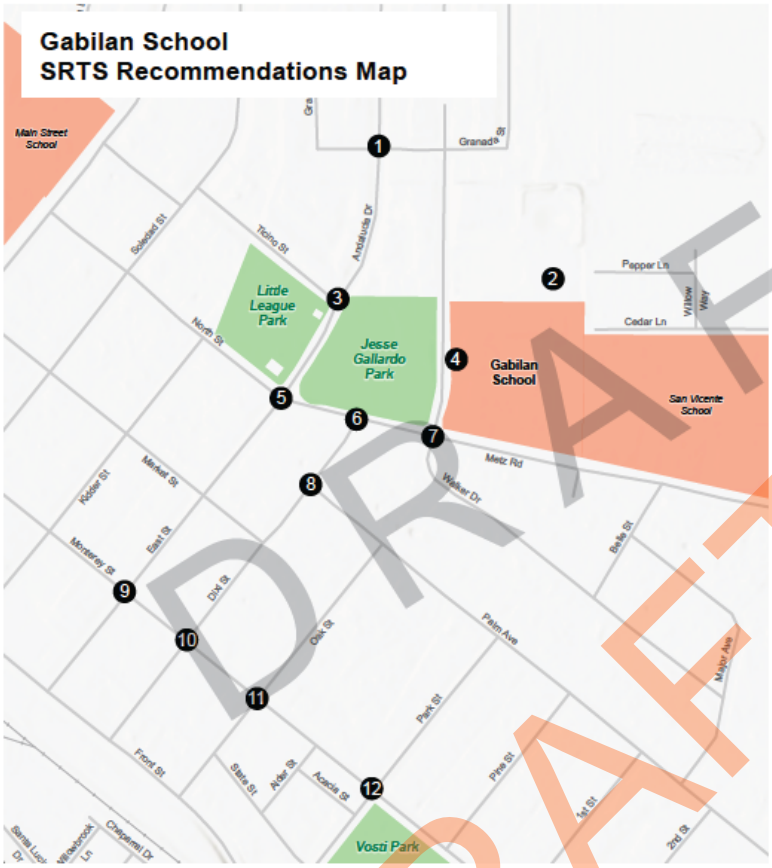

BOUNDARIES

School Property City Limits

Parks

Recommendations (Continued)

8 **Palm Ave and Dixi St:** Install high-visibility crosswalks on the north and east legs of the intersection. Install ADA-compliant curb ramps on the northeast and southeast corners of the intersection.

9 **East St and Monterey St:** Install high-visibility crosswalks on all legs of the intersection. Install curb extensions* on the northeast and southeast corners of the intersection.
*Consider quick-build curb extensions.

10 **Monterey St and Dixi St:** Install Rectangular Flashing Beacon (RRFB) on the east leg of the intersection. Install a high-visibility crosswalk on the east leg of the intersection.

11 **Monterey St and Oak St:** Install high-visibility crosswalks on all legs of the intersection. Install curb extensions* on all corners of the intersection.
*Consider quick-build curb extensions.

12 **Monterey St and Park St:** Install high-visibility crosswalks on all legs of the intersection. Install stop signs on the east and west legs of the intersection. Install curb extensions* on all corners of the intersection.
*Consider quick-build curb extensions.

N 0 0.09 0.17 MILES alta

DRAFT

Jack Franscioni Elementary

Jack Franscioni Elementary School is located in eastern Soledad, and it draws students primarily from the surrounding neighborhoods (see Figure 16).

Grade levels	Number of students	Students qualifying for free or reduced meals	Students residing within 1 mile of school	Students using active transportation (based on 40 survey responses)
K–6	510	87.6%	78%	28%

Figure 16. Map of Jack Franscioni Elementary School Area

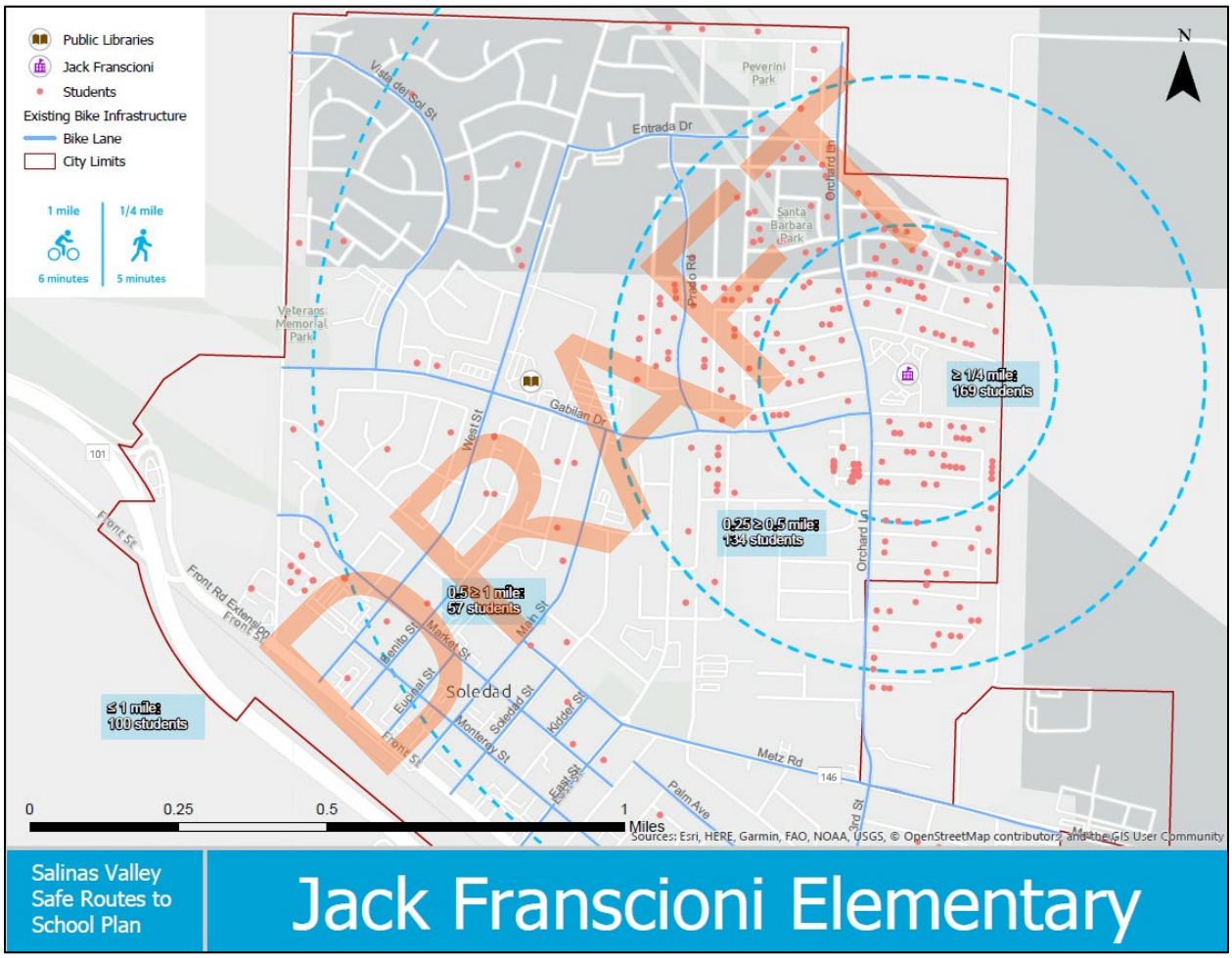

Parent Survey

Jack Franscioni Elementary School parents were asked to complete a bilingual survey about their attitudes toward walking and biking to school in the fall of 2022, and 40 responses were received. The full survey report is in Appendix X.

The survey asked parents to select the most important factors in their decisions whether to allow their

children to walk or bike to school. The top issues for parents are listed in Figure 17, below.

Figure 17. Parents' Concerns about Children Walking or Biking to School (respondents could select more than one)

Top Concerns	Jack Franscioni Elementary
Convenience of driving	35%
Speed of traffic along route	35%
Distance	30%
Time	30%
Safety of intersections and crossings	30%
Sidewalks or pathways	30%
Violence or crime	30%
Adults to walk or bike with	30%

Current Infrastructure Conditions

Motorist Conditions

- Jack Franscioni Elementary has a drop-off loop and a parking lot off Orchard Lane. Parking spaces in the lot are reserved for staff and visitors.
- At the time of the audit, drop-offs took place in the drop-off loop, in the employee parking lot, and on San Antonio Street
- School bus drop-off takes place on a designated space in the parking lot near the drop-off loop.
- Orchard Lane and Gabilan Drive are primary emergency response routes. The intersection of Orchard and Gabilan is also used by students and parents going to Soledad High, and there is traffic congestion at the intersection before and after school.

Pedestrian Conditions

- There are complete sidewalks on both sides of Orchard Lane and San Antonio Street.
- The intersection of Orchard Lane and San Antonio St is a four-way stop with high-visibility crosswalks and curb extensions.
- The intersection of Orchard Lane and Gabilan Drive is a four-way stop with high-visibility crosswalks.
- At the time of the audit there were crossing guards present at the intersections of Orchard Lane with San Antonio Street and with Gabilan Drive.

Bicycling Conditions

- There are class II bike lanes on both sides of Orchard Lane and Gabilan Drive near the school. The bike lane striping is faded in several locations, especially on Gabilan Drive. There are no bicycle facilities on other neighborhood streets.

DRAFT

Recommended Infrastructure Improvements around Jack Franscioni Elementary School

Table 3 lists recommendations for Jack Franscioni Elementary School, and the map below shows their locations in relation to the school.

Table 3. Recommendations for Jack Franscioni Elementary

#	Street	Cross Street 1	Cross Street 2	Issue	Recommendation
		Orchard Lane	Gabilan Drive	Many comments about difficulty crossing this intersection, drivers not yielding to people crossing, and difficulty for the crossing guard to serve all legs of the intersection.	Conduct intersection improvement study at this location.
		Orchard Lane	Gabilan Drive	Intersection is very large, and crossing guard cannot effectively assist people on all legs.	Station a second crossing guard at this intersection.
		Orchard Lane	Gabilan Drive	Many comments about difficulty crossing this intersection, drivers not yielding to people crossing, and difficulty for the crossing guard in controlling traffic.	Install flashing stop signs, stop bars, and high-visibility crosswalks on all legs of the intersection. Install ADA-compliant curb ramps on the northeast, northwest, and southwest corners of the intersection.
		School property		Students crossing intersection of Orchard and Gabilan to reach vendors after school.	Do not allow vendors on school property. Install signage near school disallowing vendors to set up near school sidewalks.
		Driveway entrance (Orchard Lane)		Drivers exiting through parking lot entrance.	Install "Wrong way" signage facing parking lot so drivers do not exit onto Orchard Lane.
		Driveway exit (San Antonio Street)		Drivers entering through parking lot exit.	Install "Do not enter" signage facing street so drivers do not enter the parking lot from San Antonio Street
		Driveway exit (San Antonio		Limited visibility for drivers exiting school parking lot.	Extend red curbs on either side of the San Antonio Street driveway exit to

DRAFT

		Street)			improve visibility.
		Orchard Lane	San Antonio Street	Missing curb ramps.	Install ADA-compliant curb ramps on all corners of the intersection.
		Orchard Lane	San Antonio Street	Families crossing on all legs of intersection.	Install high-visibility crosswalk on the north leg of the intersection.
		Orchard Lane	San Antonio Street	Missing stop bars.	Install stop bars on all legs of the intersection.
		Orchard Lane	San Gabriel	Reports of speeding on Orchard Lane.	Install traffic circle.
		Orchard Lane	Entrada Drive	Pedestrian route to school.	Install high-visibility crosswalk at west leg of the intersection.
	Gabilan Drive	San Vicente Road	Rojos Way	Concerns about student safety while crossing four lanes of traffic. Gaps in bike facilities.	Study feasibility of road diet along entire street.
	Gabilan Drive	San Vicente Road	Rojos Way	Standard bike lanes provide less safety and can be uncomfortable for many people, especially when located next to higher-speed roadways.	Install separated bikeway.
	Orchard Lane	Terraza Street	Metz Road	Standard bike lanes provide less safety and can be uncomfortable for many people, especially when located next to higher-speed roadways.	Install separated bikeway.

DRAFT

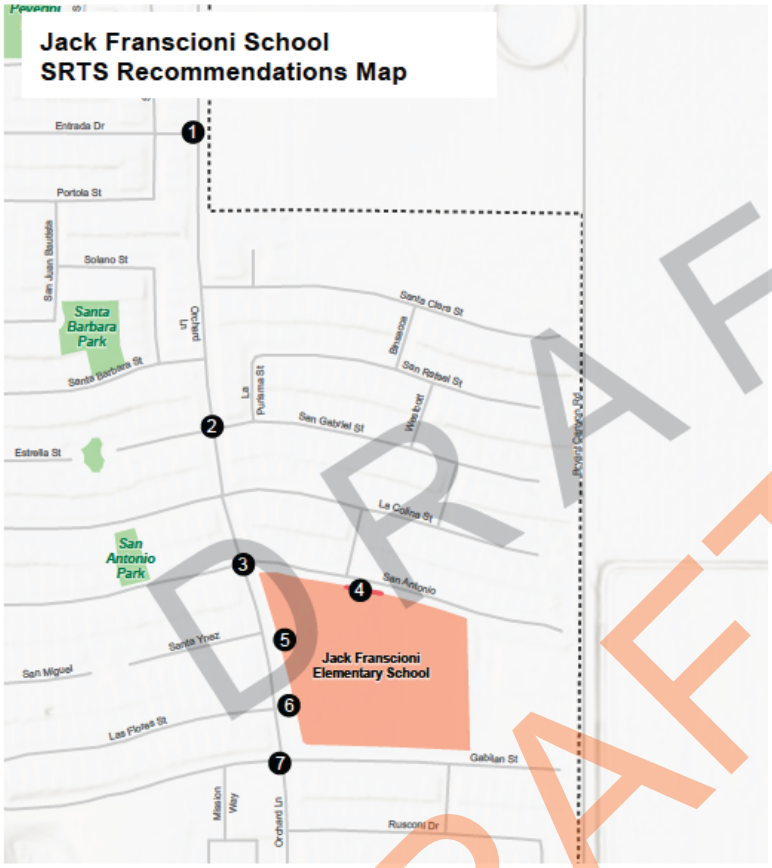

LINEAR RECOMMENDATIONS

Red Curb

BOUNDARIES

School Property City Limits

Parks

Recommendations

1. **Orchard Ln and Entrada Dr:** Install a high-visibility crosswalk on the west leg of the intersection.
2. **San Gabriel and Orchard Ln:** Install a traffic circle.
3. **San Antonio St and Orchard Ln:** Install a high-visibility crosswalk on the north leg of the intersection. Install stop bars on all legs of the intersection. Install ADA-compliant curb ramps on all corners of the intersection.
4. **School Driveway Exit:** Install "Do Not Enter" signage facing the street so drivers do not enter the parking lot from San Antonio Street. Extend red curb on either side of the school driveway exit on San Antonio Street to improve visibility.
5. **School Driveway Entrance:** Install "Wrong Way" signage facing the parking lot so drivers do not exit onto Orchard Lane.
6. **School Property:** Do not allow vendors on school property. Install signages near the school disallowing vendors to set up near school sidewalks.

Continued on the next page

0 0.09 0.17 MILES

alta

DRAFT

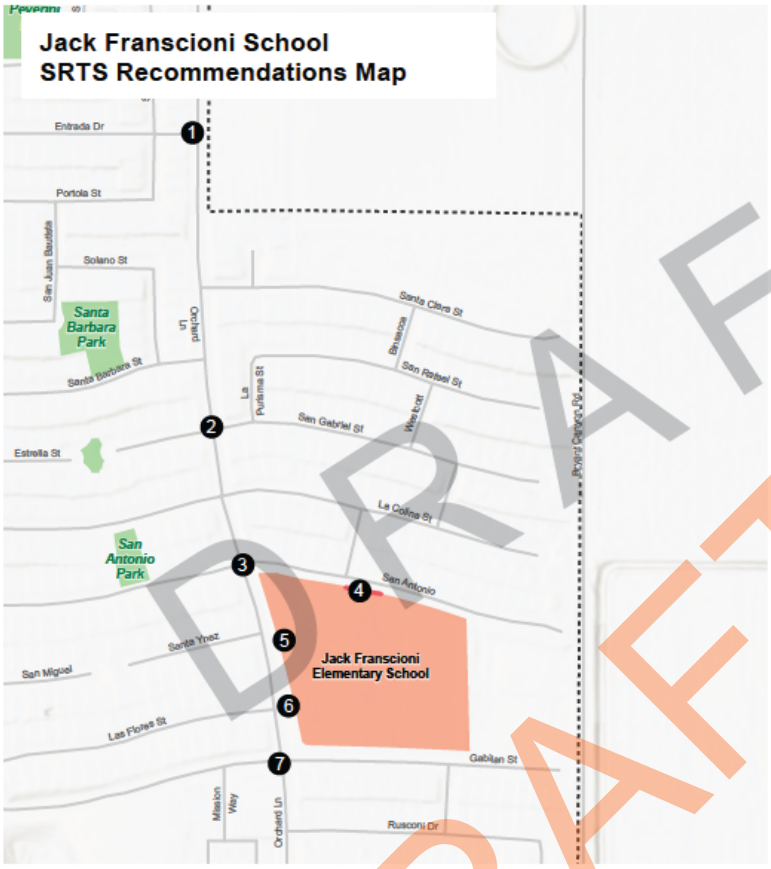

LINEAR RECOMMENDATIONS

Red Curb

BOUNDARIES

School Property City Limits

Parks

Recommendations (Continued)

7 **Orchard Ln and Gabilan Dr:** Install a high-visibility crosswalk on the south leg of the intersection. Install ADA-compliant curb ramps on the northeast, northwest, and southwest corners of the intersection. Install stop bars on all legs of the intersection. Install flashing stop signs on all legs of the intersection. Station a second crossing guard at this intersection. Conduct intersection improvement study for a roundabout at this location.

0 0.09 0.17 MILES

alta

DRAFT

Main Street Middle

Main Street Middle School is located in central Soledad, and it draws students from throughout the city, being the only local middle school (see Figure 18).

Grade levels	Number of students	Students qualifying for free or reduced meals	Students residing within 1 mile of school	Students using active transportation (based on 18 survey responses)
7–8	792	93.7%	83%	22%

Figure 18. Map of Main Street Middle School Area

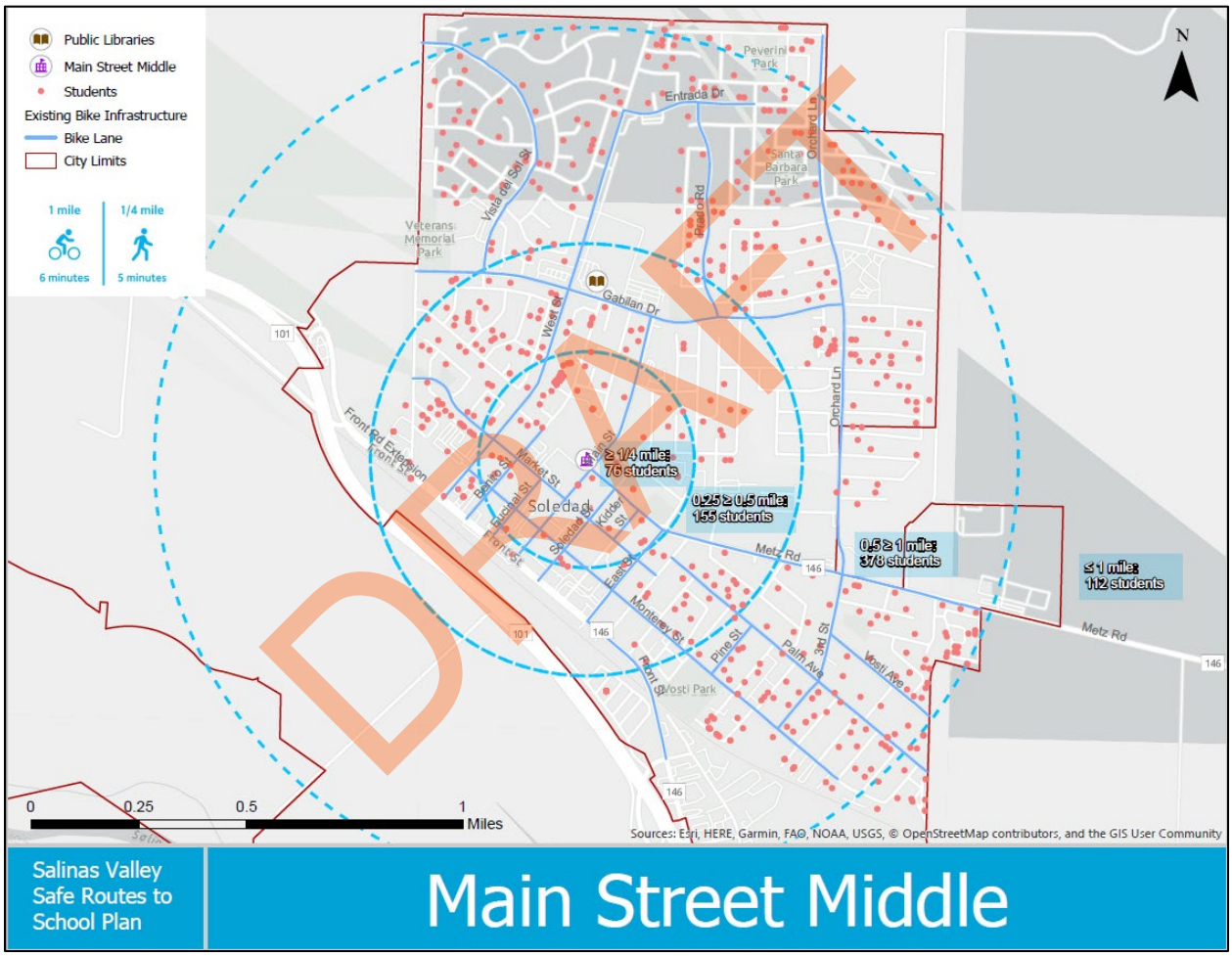

DRAFT

Parent Survey

Main Street Middle School parents were asked to complete a bilingual survey about their attitudes toward walking and biking to school in the fall of 2022, and 18 responses were received. The full survey report is in Appendix X.

The survey asked parents to select the most important factors in their decisions whether to allow their children to walk or bike to school. The top issues are listed in the graph below.

Figure 19. Parents' Concerns about Children Walking or Biking to School (respondents could select more than one)

Top Concerns	Main Street Middle
Speed of traffic along route	63%
Safety of intersections and crossings	50%
Amount of traffic along route	44%
Child's before or after-school activities	44%
Adults to walk or bike with	38%

Current Infrastructure Conditions

Motorist Conditions

- Main Street Middle School has a drop-off loop off Main Street and a parking lot off Market Street. Spaces in the lot are reserved for staff and visitors.
- At the time of the audit, drop-offs took place mostly in the drop-off loop, with some in the parking lot. Minimal congestion near the loop was observed.
- School bus drop-off takes place on the designated bus loop in the parking lot off Market Street.
- Main Street is an arterial street and Market Street is a collector street.
- Some of the drop-offs occur on-street along Market Street.

Pedestrian Conditions

- There are complete sidewalks on both sides of Main Street and Market Street.
- The intersection of Main Street and Market Street is a four-way stop and has high-visibility crosswalks with curb extensions.
- There are high-visibility crosswalks and curb extensions at the intersection of Market Street and Encinal Street.
- There are standard marked crosswalks at the intersection of Market and Benito Streets, and no marked crosswalks at the intersection of Market and West Streets.
- At the time of the audit, there were no crossing guards present.

Bicycling Conditions

- There are class II bike lanes on Main Street, Market Street, Monterey Street, and West Street.

DRAFT

Recommended Infrastructure Improvements around Main Street Middle School

Table 4 lists recommendations for Main Street Middle School, and the map below shows their locations in relation to the school.

Table 4. Recommendations for Main Street Middle

#	Street	Cross Street 1	Cross Street 2	Issue	Recommendation
		Main Street	Monterey Street	Pedestrian collisions at this intersection.	Install curb extensions on all corners of the intersection.*
		Main Street	Monterey Street	Pedestrian collisions at this intersection.	Install high-visibility crosswalks on all legs of the intersection.
		Benito Street	Monterey Street	Missing curb ramps.	Install ADA-compliant curb ramps on the northeast corner of the intersection.
		Soledad Street	Market Street	Pedestrian route to school.	Install high-visibility crosswalks at north and south legs of the intersection.
		Main Street	Market Street	Key route to school, reports of drivers not yielding to pedestrians.	Install flashing stop signs on all legs of intersection.
		Encinal Street	Market Street	Near misses reported, drivers turning right onto Market are not always looking for students crossing.	Install RRFB at the east side of the crosswalk.
		Benito Street	Market Street	Key route to school, high volumes of cars and students crossing.	Install curb extensions on all corners of the intersection.
		Benito Street	Market Street	Key route to school, high volumes of cars and students crossing.	Install high-visibility crosswalks on all legs of the intersection.
		Benito Street	Market Street	Key route to school, high volumes of cars and students crossing.	Install flashing stop signs on all legs of intersection.
		West Street	Market Street	Missing curb ramps.	Install ADA-compliant curb ramps on all corners of the intersection.
		West Street	Market Street	Key route to school, high volumes of students crossing.	Install high-visibility crosswalks on all legs of the intersection.
		Main Street	North Street	Key route to school, high volumes of students crossing.	Install flashing stop signs at north and east legs of the intersection.

DRAFT

		Main Street	North Street	Key route to school, high volumes of students crossing.	Install curb extensions on all corners of the intersection.
		Benito Street	North Street	Missing curb ramps.	Install ADA-compliant curb ramps on the northeast corner of the intersection.
		Benito Street	North Street	Key route to school, high volumes of students crossing.	Install high-visibility crosswalks at the north and west legs of the intersection.
		Soledad Street	Ticino Street	Missing curb ramps.	Install ADA-compliant curb ramps on the northeast and southeast corners of the intersection.
		Soledad Street	Ticino Street	Reports of drivers not yielding for people crossing.	Install high-visibility crosswalks at the north, east, and west legs of the intersection.
		Main Street	Ticino Street	Missing stop bars.	Install stop bars at the north and east legs of the intersection.
		Main Street	Ticino Street	Pedestrian route to school.	Install curb extensions on the northeast, northwest, and southeast corners of the intersection.*
	West Street	Front Street	Gabilan Drive	Reports of speeding.	Reduce travel lanes from four to two, with landscaped median.
	West Street	Front Street	End of Street	Standard bike lanes provide less safety than separated bikeways and can be uncomfortable for many people, especially when located next to higher-speed roadways.	Install separated bikeway.
	Market Street	San Vicente Road	Dixi Street	Standard bike lanes can be uncomfortable for many people. Buffered bike lanes provide more space between bicyclists and cars.	Install buffered bike lanes.
	Monterey Street	West Street	8th Street	Standard bike lanes can be uncomfortable for many people. Buffered bike lanes provide more space between bicyclists and cars.	Install buffered bike lanes.

***The City's priority is safety improvements at uncontrolled intersections. Curb extensions at stop-controlled intersections are a lower priority for installation.**

DRAFT

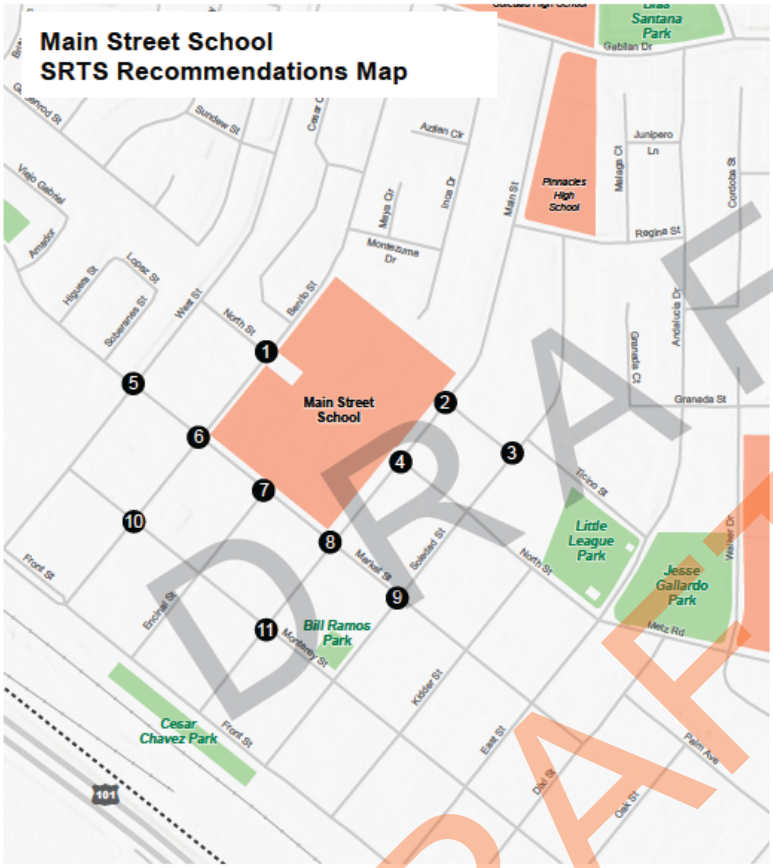

BOUNDARIES

School Property City Limits

Parks

Recommendations

1. **Benito St and North St:** Install high-visibility crosswalks on the north and west legs of the intersection. Install an ADA-compliant curb ramp on the northeast corner of the intersection.
2. **Main St and Ticino St:** Install curb extensions on the northeast, northwest, and southeast corners of the intersection. Install stop bars on the north and east legs of the intersection.
3. **Soledad St and Ticino St:** Install high-visibility crosswalks on the north, east, and west legs of the intersection. Install ADA-compliant curb ramps on the northeast and southeast corners of the intersection.
4. **Main St and North St:** Install curb extensions on all corners of the intersection. Install flashing stop signs on the north and east legs of the intersection.
5. **Market St and West St:** Install high-visibility crosswalks on all legs of the intersection. Install ADA-compliant curb ramps on all corners of the intersection.
6. **Market St and Benito St:** Install high-visibility crosswalks on all legs of the intersection. Install curb extensions on all corners of the intersection. Install flashing stop signs on all legs of intersection.

Continued on the next page

0 0.1 0.2 MILES

alta

DRAFT

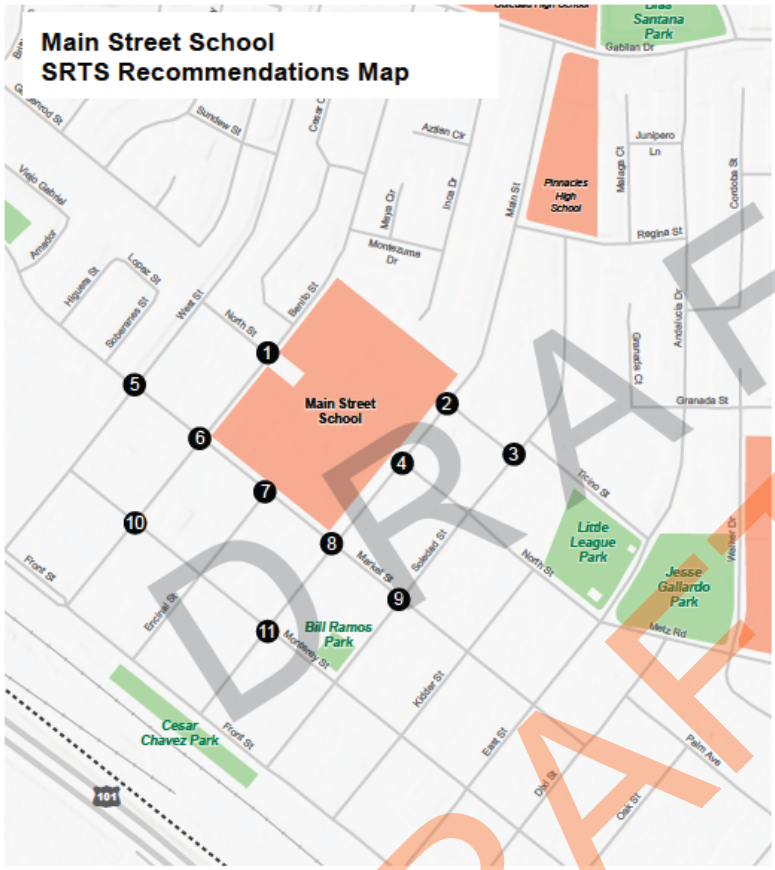

BOUNDARIES

School Property City Limits

Parks

Recommendations (Continued)

7. **Market St and Encinal St:** Install Rectangular Rapid Flashing Beacon (RRFB) on the east crosswalk.
8. **Market St and Main St:** Install flashing stop signs on all legs of intersection.
9. **Soledad St and Market St:** Install high-visibility crosswalks on the north and south legs of the intersection.
10. **Monterey St and Benito St:** Install an ADA-compliant curb ramp on the northeast corner of the intersection.
11. **Monterey St and Main St:** Install high-visibility crosswalks on all legs of the intersection. Install curb extensions on all corners of the intersection.

DRAFT

Pinnacles High

Pinnacles High School is located in Central Soledad adjacent to Soledad High School, and it draws students from throughout the city for its various programs (see Figure 20).

Grade levels	Number of students	Students qualifying for free or reduced meals	Students residing within 1 mile of school	Students using active transportation (based on 18 survey responses)
9–12	31	90.3%	83%	39%

Figure 20. Map of Pinnacles High School Area

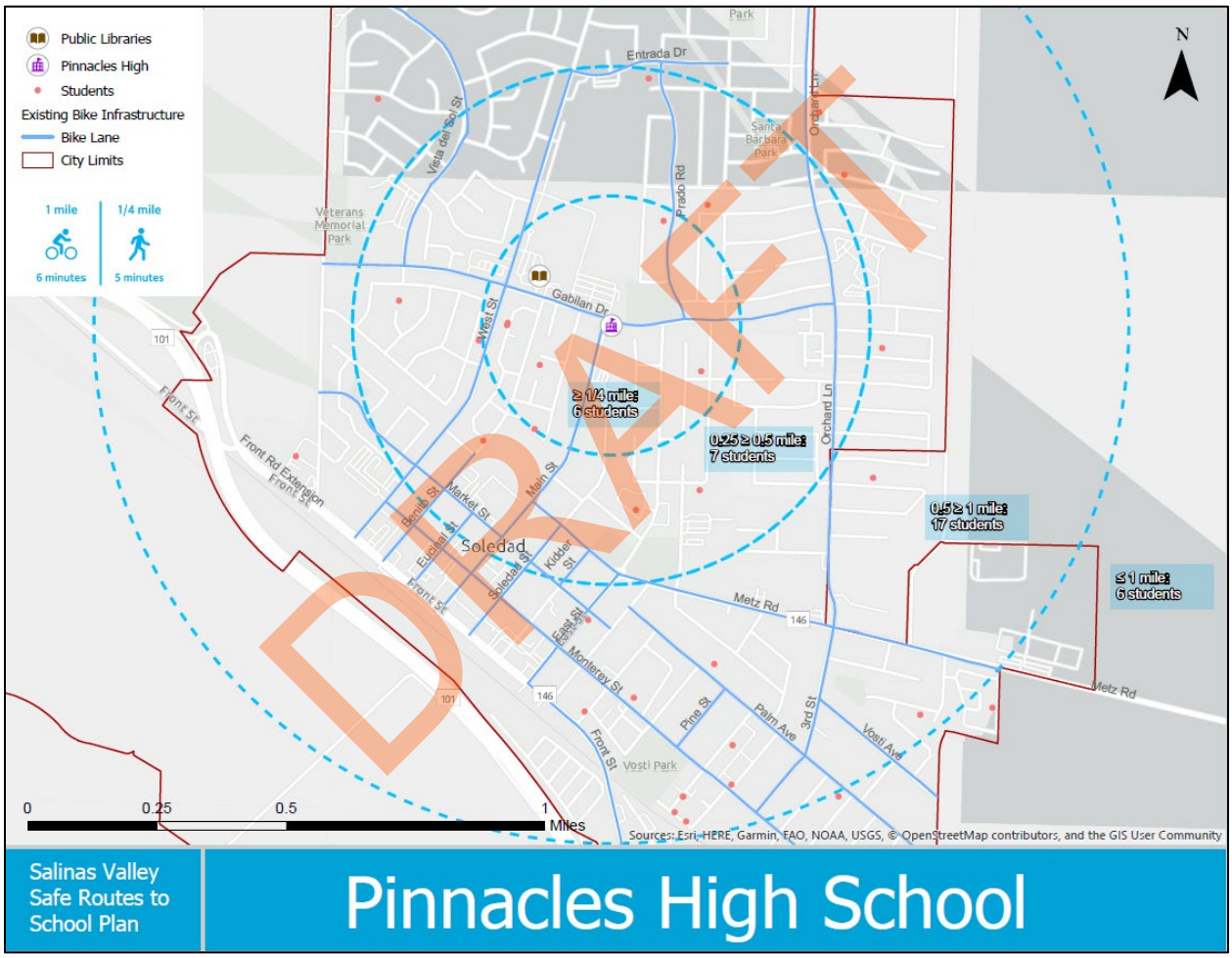

Parent Survey

Pinnacles High School parents were asked to complete a bilingual survey about their attitudes toward walking and biking to school in fall 2022, and 18 responses were received. The full survey report is in Appendix X.

The survey asked parents to select the most important factors in their decisions whether to allow their children to walk or bike to school. The top issues for parents are listed in the graph below.

Figure 21. Parents' Concerns about Children Walking or Biking to School (respondents could select more than one)

Top Concerns	Pinnacles High
Amount of traffic along route	60%
Convenience of driving	60%
Safety of intersections and crossings	20%
Speed of traffic along route	20%
Time	20%
My child already walks or bikes to/from school	20%
Weather or climate	20%
Crossing guards	20%
Sidewalks or pathways	20%
Adults to walk or bike with	20%
Child's before or after-school activities	20%

Current Infrastructure Conditions

Motorist Conditions

- At the time of the audit, Pinnacles High School did not have a designated drop-off loop or area, and parking spaces in its small lot were reserved for staff. The parking lot is also used for trash pick-up and deliveries, which discourages staff from using the lot to avoid getting boxed in.
- At the time of the audit, drop-off took place on-street along Main Street and Gabilan Drive, where there is limited on-street parking.
- School bus drop-off takes place in the Soledad High parking lot. Pinnacles High has space at Soledad High as well as at its primary building on Main Street.
- Gabilan Drive is an arterial street and a primary emergency response route.
- Pinnacles High starts later than Soledad High, so students arrive after traffic on Gabilan Drive has subsided. School staff are arriving on campus during high school drop-off traffic.

Pedestrian Conditions

- There are complete sidewalks on both sides of Main Street and Gabilan Drive.
- The intersection of Main Street and Gabilan Drive is a three-way stop and has high-visibility crosswalks. The fourth leg of the intersection is the driveway to the high school parking lot.
- There are no marked crosswalks across Main Street between Gabilan Drive and Ticino Street. There are high-visibility crosswalks at the intersection of Main Street and Ticino Street.
- At the time of the audit, there were no crossing guards present. The schools have had crossing guards at the intersection of Main Street and Gabilan Drive in the past but have been unable to keep anyone in the position due to safety concerns.

DRAFT

Bicycling Conditions

- There are class II bike lanes on both sides of Main Street and Gabilan Drive. There is a gap in the eastbound bike lane on Gabilan Drive between Benito Street and Main Street.
- There are no bicycle facilities on other neighborhood streets.

Recommended Infrastructure Improvements around Pinnacles High School

Table 5 lists recommendations for Pinnacles High, and the map below shows their locations in relation to the school.

Table 5. Recommendations for Pinnacles High

#	Street	Cross Street 1	Cross Street 2	Issue	Recommendation
		Granada Street	Walker Drive	Pedestrian collision at this intersection.	Install high-visibility crosswalks on the east and south legs of the intersection.
		Main Street	Regina Street	Pedestrian route to school. Reports of drivers not yielding to people crossing.	Install curb extensions on the northeast and southeast corners of the intersection.*
		Main Street	Regina Street	Pedestrian route to school. Reports of drivers not yielding to people crossing.	Install high-visibility crosswalks on the east and south legs of the intersection.
		Grenada Street	Serra Lane	Pedestrian collision at this intersection.	Install high-visibility crosswalks on the north and south legs of the intersection.
		Toledo Street	Gabilan Drive	Pedestrian route to school.	Install high-visibility crosswalks on the north and east legs of the intersection.
		Toledo Street	Gabilan Drive	Pedestrian route to school.	Install stop bars on all legs of the intersection.
		Prado Drive	Gabilan Drive	Pedestrian route to school. Drivers turning onto Gabilan do not always check for pedestrians crossing.	Install curb extensions on the northeast and northwest corners of the intersection. Consider quick-build curb extensions.

DRAFT

		Prado Drive	Gabilan Drive	Pedestrian route to school. Drivers turning onto Gabilan do not always check for pedestrians crossing.	Install a high-visibility crosswalk on the north leg of the intersection.
		Main Street	In front of school	No dedicated drop-off zone, and on-street parking is frequently full. Dop-off in small school parking lot creates safety concerns.	Designate two parking spaces of space on Main St as a white-curb loading zone for school drop-off and pick-up.
		Main Street	Gabilan Drive	Many comments about safety at this intersection. Schools stationed a crossing guard here in the past but could not continue because the guard felt unsafe. Drivers turn in all directions, not yielding to people crossing.	Conduct intersection improvement study at this location. If a roundabout is not warranted, install curb extensions on the southeast and southwest corners of the intersection.
		Main Street	Gabilan Drive	Many comments about safety at this intersection. Schools stationed crossing guards here in the past but could not continue because the guards felt unsafe. One crossing guard was not enough to serve everyone crossing.	Station crossing guards at this intersection, ideally one at the east and one on the west crosswalk.
	Gabilan Drive	San Vicente Road	Rojos Way	Concerns about student safety while crossing four lanes of traffic. Gaps in bike facilities.	Study feasibility of road diet along entire street.
	Gabilan Drive	San Vicente Road	Rojos Way	Standard bike lanes provide less safety and can be uncomfortable for many people, especially when located next to higher-speed roadways.	Install separated bikeway.

***The City's priority is safety improvements at uncontrolled intersections. Curb extensions at stop-controlled intersections are a lower priority for installation.**

DRAFT

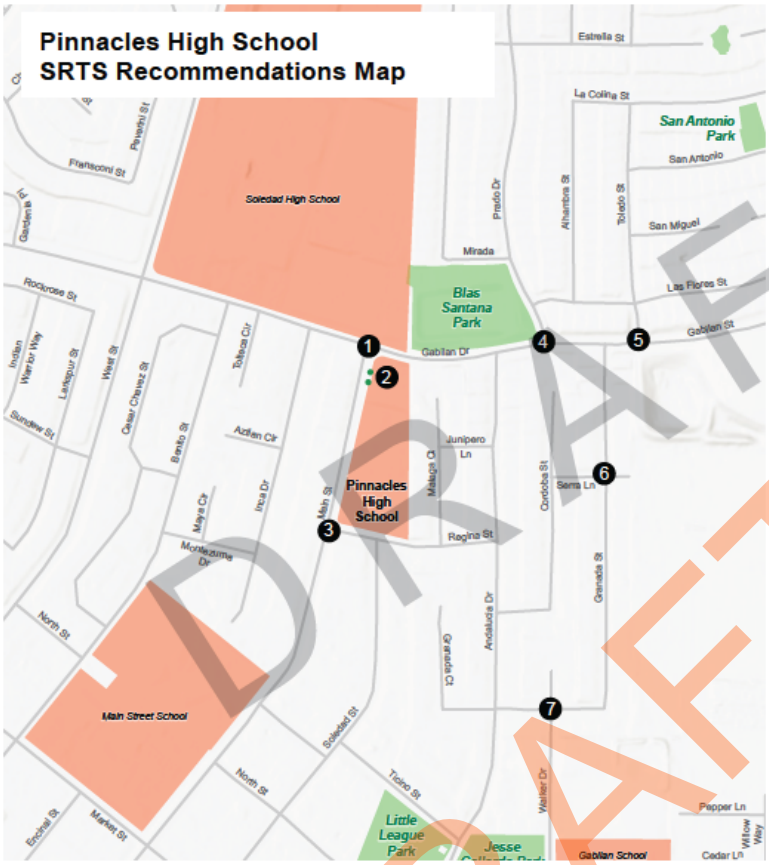
Pinnacles High School
SRTS Recommendations Map
Estrella St
La Colina St
San Antonio Park
San Antonio
San Miguel
Las Flores St
Gabilan St
Gabilan Dr
Mirada
Prado Dr
Alhambra St
Toledo St
Soledad High School
Blas Santana Park
Rodcrose St
Indian Warrior Way
Landgraf St
West St
Cesar Chavez St
Sunview St
Tolosa Cir
Azilan Cir
Benito St
Maya Cir
Inca Dr
Montezuma Dr
Main St
Pinnacles High School
Malaga Ct
Junipero Ln
Regina St
Sierra Ln
Cordoba St
Granada St
Andalusia Dr
Granada Ct
North St
Main Street School
Soledad St
Toro St
Walker Dr
Pepper Ln
Willow Way
Cedar Ln
Encinal St
Market St
Little League Park
Jesse
Gabilan School
1
2
3
4
5
6
7
LINEAR RECOMMENDATIONS
Loading Zone
BOUNDARIES
School Property
City Limits
Parks
Recommendations
1 Gabilan Dr and Main St: Install curb extensions on the southeast and southwest corners of the intersection. Conduct intersection improvement study for a roundabout at this location. Station crossing guards at this intersection, ideally one at the east crosswalk and one at the west crosswalk.
2 School Loading Zone on Main St: Dedicate two parking spaces on Main Street as white-curb loading zone for school drop-off/pick-up.
3 Regina St and Main St: Install high-visibility crosswalks on the east and south legs of the intersection. Install curb extensions on the northeast and southeast corners of the intersection.
4 Prado Dr and Gabilan Dr: Install a high-visibility crosswalk on the north leg of the intersection. Install curb extensions* on the northeast and northwest corners of the intersection.
*Consider quick-build curb extensions.
5 Toledo St and Gabilan Dr: Install high-visibility crosswalks on the north and east legs of the intersection. Install stop bars on all legs of the intersection.
Continued on the next page
N
0
0.1
0.2 MILES
alta

DRAFT

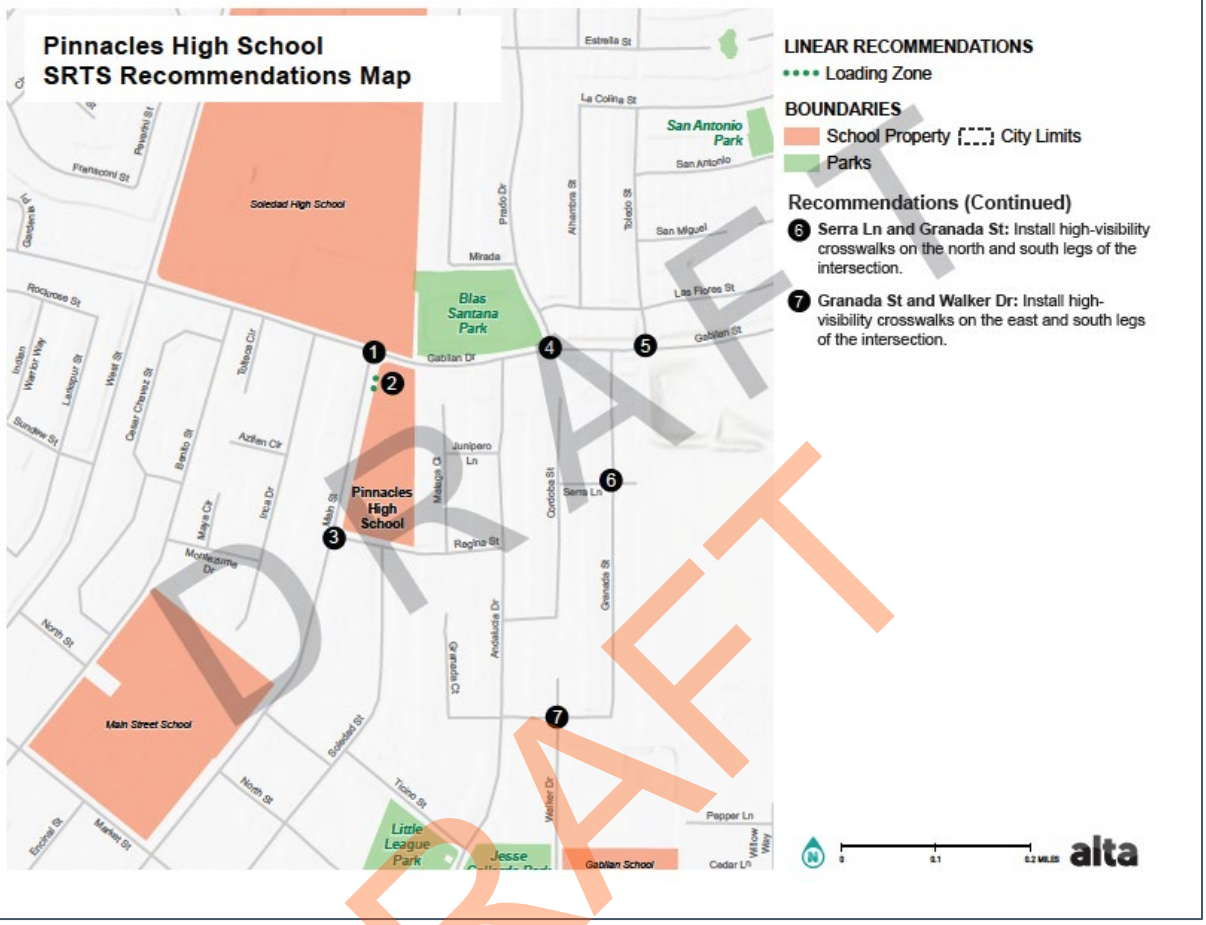
Pinnacles High School
SRTS Recommendations Map
LINEAR RECOMMENDATIONS
Loading Zone
BOUNDARIES
School Property
City Limits
Parks
Recommendations (Continued)
6 Serra Ln and Granada St: Install high-visibility crosswalks on the north and south legs of the intersection.
7 Granada St and Walker Dr: Install high-visibility crosswalks on the east and south legs of the intersection.
Soledad High School
Blas Santana Park
San Antonio Park
Pinnacles High School
Main Street School
Little League Park
Jesse
Gabilan School
Estrella St
La Colina St
San Antonio
San Miguel
Las Flores St
Gabilan St
Gabilan Dr
Mirada
Prado Dr
Alhambra St
Toledo St
Rockrose St
Franciscini St
Pavarini St
Garden St
Indian Warrior Way
Larkspur St
West St
Cesar Chavez St
Sundew St
Tulasa Cir
Brento St
Aztlan Cir
Maya Cir
Inca Dr
Montezuma Dr
Main St
Malaga Ct
Junipero Ln
Cordoba St
Serra Ln
Regina St
Granada St
Andalucia Dr
Granada Ct
Walker Dr
Pepper Ln
Willow Way
Cedar Ln
North St
Soledad St
Tolino St
Enchiel St
Market St
0
0.1
0.2 MILES
alta

DRAFT

Rose Ferrero Elementary

Rose Ferrero Elementary School is located in northern Soledad adjacent to Soledad High School, and it draws students primarily from the surrounding neighborhoods (see Figure 22).

Grade levels	Number of students	Students qualifying for free or reduced meals	Students residing within 1 mile of school	Students using active transportation (based on 17 survey responses)
K–6	461	88.5%	88%	24%

Figure 22. Map of Rose Ferrero Elementary School Area

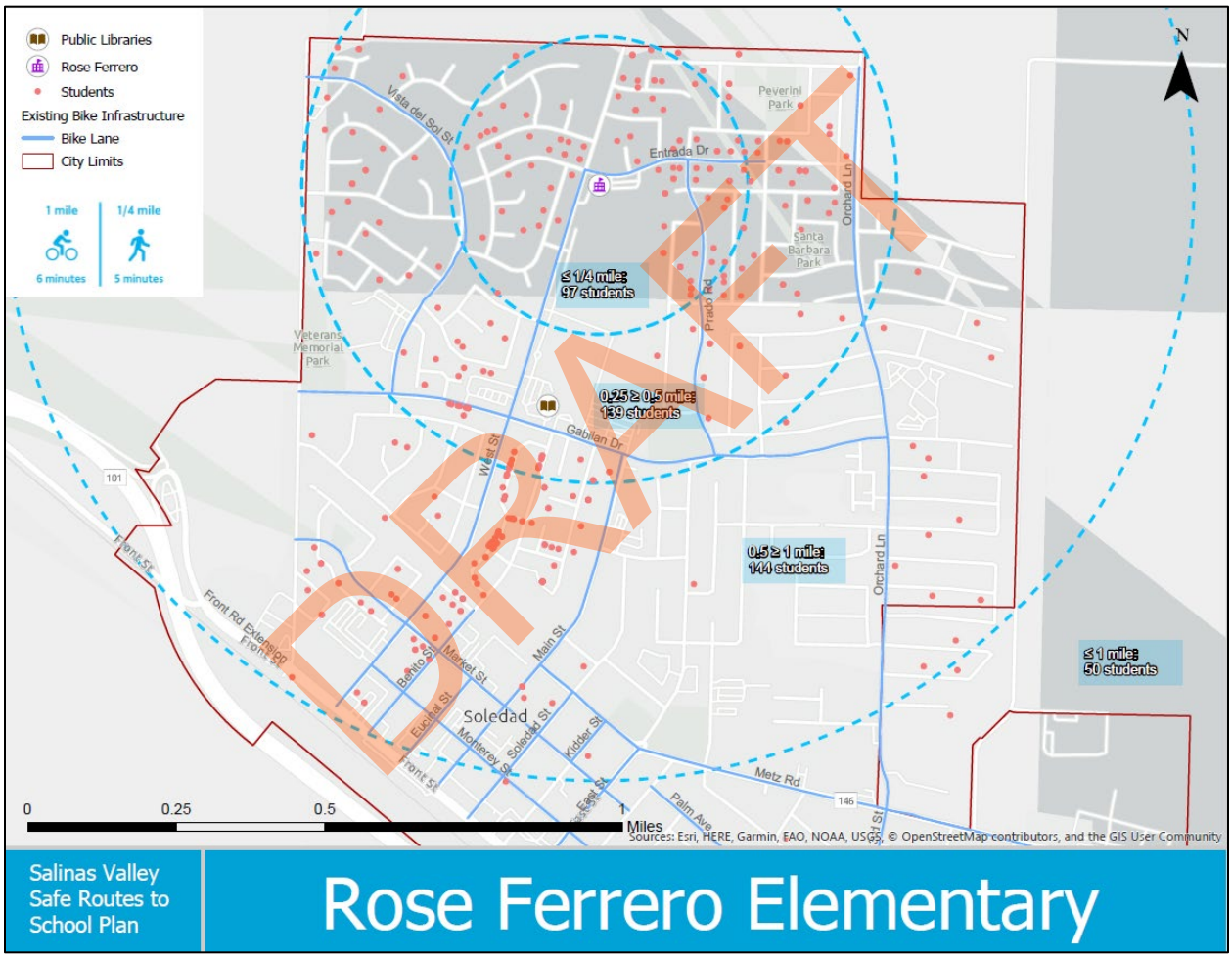

Parent Survey

Rose Ferrero Elementary School parents were asked to complete a bilingual survey about their attitudes toward walking and biking to school in the fall of 2022, and 17 responses were received. The full survey report is in Appendix X.

The survey asked parents to select the most important factors in their decisions whether to allow their children to walk or bike to school. The top issues for parents are listed in the graph below.

Figure 23. Parents' Concerns about Children Walking or Biking to School (respondents could select more than one)

Top Concerns	Rose Ferrero Elementary
Safety of intersections and crossings	54%
Amount of traffic along route	46%
Convenience of driving	46%
Speed of traffic along route	46%
Time	38%
Weather or climate	38%
Crossing guards	38%

Current Infrastructure Conditions

Motorist Conditions

- Rose Ferrero Elementary School has two drop-off loops and two parking lots off West Street and Entrada Drive. Spaces in the lot are mostly reserved for staff, with some for visitors.
- At the time of the audit, drop-off took place in the parking lot off Entrada Drive. Parents were not supposed to drop students off in the parking lot/loop off of West Street, and the drop-off lane in that lot was reserved for buses.
- Drop-off and pick-up also took place on Entrada Drive. There was traffic congestion on Entrada Drive before and after school.

Pedestrian Conditions

- There are complete sidewalks on both sides of Entrada Drive and West Street.
- The intersection of Entrada Drive and West Street is a four-way stop with high-visibility crosswalks on three legs.
- There are no marked crosswalks on West Street between Anderson Street and Entrada Drive.
- At the time of audit, there was one crossing guard present at the intersection of Entrada Drive and West Street.

Bicycling Conditions

- There are class II bike lanes on both sides of West Street south of Entrada Drive and on Entrada Street between West Street and Vista Avenue. There are no bicycle facilities on other smaller neighborhood streets.

DRAFT

Recommended Infrastructure Improvements around Rose Ferrero Elementary School

Table 6 lists recommendations for Rose Ferrero Elementary School, and the map below shows their locations in relation to the school.

Table 6. Recommendations for Rose Ferrero Elementary

#	Street	Cross Street 1	Cross Street 2	Issue	Recommendation
	Prado Drive	Gabilan Drive	Entrada Road	Reports of speeding.	Install chokers along the length of the street.
	Entrada Drive	School driveway exit		Limited visibility for drivers exiting parking lot.	Install a red curb to improve visibility of the driveway exit.
	Entrada Drive	Vista de Soledad	Orchard Lane	Reports of speeding, drivers doing U-turns near parking lot exit.	Install midblock chokers to prevent speeding and U-turns near school.
	School driveway on West Street			Parking lot off West Street is for bus drop-off only.	Install "No drop-off" signage at parking lot entrance.
	School driveway on West Street			Parking lot off West Street is for bus drop-off only. Parent drop-off blocks access for buses.	Block the driveway entrance during drop-off and pick-up with cones. A staff person should monitor the entrance to allow entry to buses and staff.
	School driveway on West Street			Entry and exit at both driveways makes bus access more difficult.	Stripe the parking lot for one-way travel (enter on West Street, exit on Entrada Drive).
	School driveway exit on Entrada Drive			Entry and exit at both driveways makes bus access more difficult.	Install "Do not enter" signage at driveway exit.
	School loop on Entrada Drive			Parents parking in school loop to drop off students.	Have a staff person or volunteer monitor loop traffic and keep vehicles moving.
		Entrada Drive	West Street	Key pedestrian route to school.	Conduct intersection improvement study. If a roundabout is not feasible, install curb extensions on all

DRAFT

					corners of the intersection.
		Entrada Drive	West Street	Key pedestrian route to school. Families park past Entrada Drive to walk to school.	Install a high-visibility crosswalk on the north leg of the intersection.
		Entrada Drive	Prado Drive	Pedestrian route to school.	Install curb extensions on all corners of the intersection.* Consider quick-build curb extensions.
		Entrada Drive	Prado Drive	Pedestrian route to school. No marked crosswalks.	Install high-visibility crosswalks on all legs of the intersection.
	School parking lots			Traffic congestion in drop-off loop and on Entrada Road makes pick-up difficult and creates safety concerns, with families walking across Entrada to get to school.	Consider closing the school drop-off/pick-up loop and require parents to park in the school parking lot. Students will not be released from the school until the parent is at the door for pick-up.
	West Street	Front Street	End of Street	Standard bike lanes provide less safety and can be uncomfortable for many people, especially when located next to higher-speed roadways.	Install a separated bikeway.
		West Street	Gabilan Street	Pedestrian route to school. Reports that people do not feel safe crossing here.	Station a crossing guard at this intersection.
		West Street	Gabilan Street	Pedestrian route to school. Large intersection, reports that people do not feel safe crossing here.	Conduct intersection improvement study. Consider protected intersection treatments.

***City priority is safety improvements at uncontrolled intersections. Curb extensions at stop-controlled intersections are a lower priority for installation.**

DRAFT

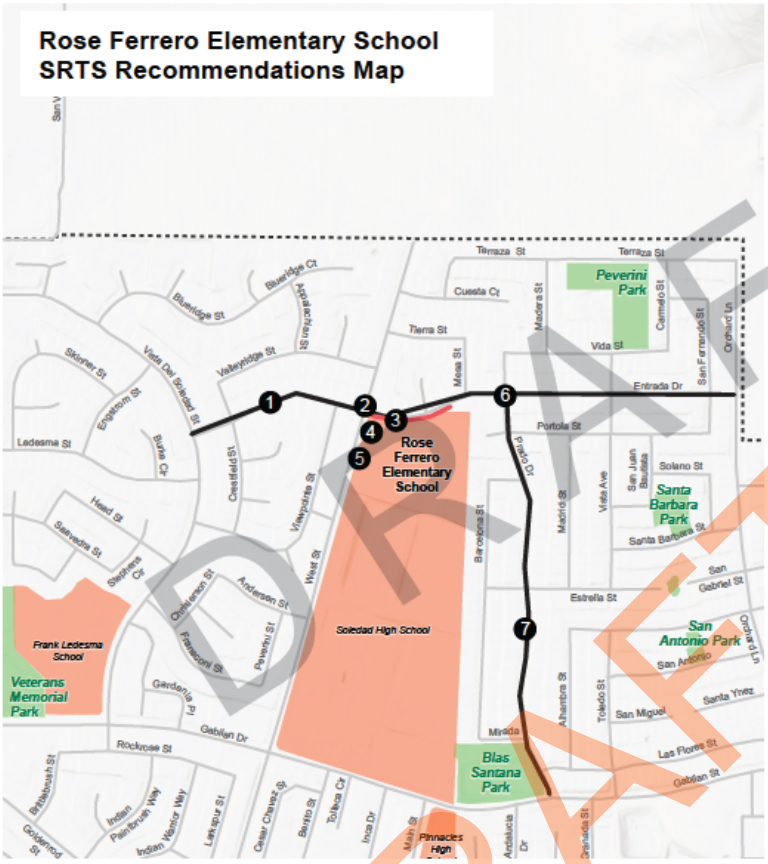
Rose Ferrero Elementary School
SRTS Recommendations Map
Rose Ferrero Elementary School
Soledad High School
Peverini Park
Santa Barbara Park
San Antonio Park
Blas Santana Park
Frank Ledesma School
Veterans Memorial Park
Pinnacles High
Terraza St
Cuesta Ct
Tierra St
Vida St
Entrada Dr
Portola St
Solano St
Estrella St
Minda
Ledesma St
Head St
Rockrose St
Gabilan Dr
Las Flores St
Santa Ynez
San Miguel
San Antonio
Madera St
Mesa St
Madrid St
Vista Ave
Toledo St
Alhambre St
Barcelona St
Andalucia Dr
Granada St
Orchard Ln
San Fernando St
Cermeño St
Vista Del Soledad St
Valleyridge St
Bluerdge St
Bluerdge Ct
Skinner St
Engelsen St
Burke Ct
Cressfield St
Valleyridge St
West St
Anderson St
Chatterton St
Franconi St
Powerhi St
Stephens Cir
Salinedra St
Gardenia Pl
Brittenbush St
Indian Paintbrush Way
Indian Wandor Way
Lawspur St
Cesar Chavez St
Barrio St
Tolteca Cir
Inca Dr
Main St
San Juan Bautista
San Gabriel St
Santa Barbara St
Pablo Dr
LINEAR RECOMMENDATIONS
Red Curb
Traffic Calming
BOUNDARIES
School Property
City Limits
Parks
Recommendations
1 Entrada Dr between Vista De Soledad St and Orchard Ln: Install midblock chokers to prevent speeding and u-turns behaviors near the school.
2 Entrada Dr and West St: Install a high-visibility crosswalk on the north leg of the intersection. Conduct intersection improvement study for a roundabout. If a roundabout is found to be infeasible, install curb extensions on all corners of the intersection.
3 Entrada Dr and School Driveway: Install a "Do Not Enter" signage at the school driveway exit. Install red curb on Entrada Drive between West Street and the school driveway exit to improve visibility near the school driveway exit.
4 School Driveway: Stripe the school driveway for one-way traffic, with entry on West Street and exit on Entrada Drive. Assign a staff member or volunteer to monitor loop traffic and ensure vehicles keep moving.
Continued on the next page
0
0.15
0.3 MILES
alta

DRAFT

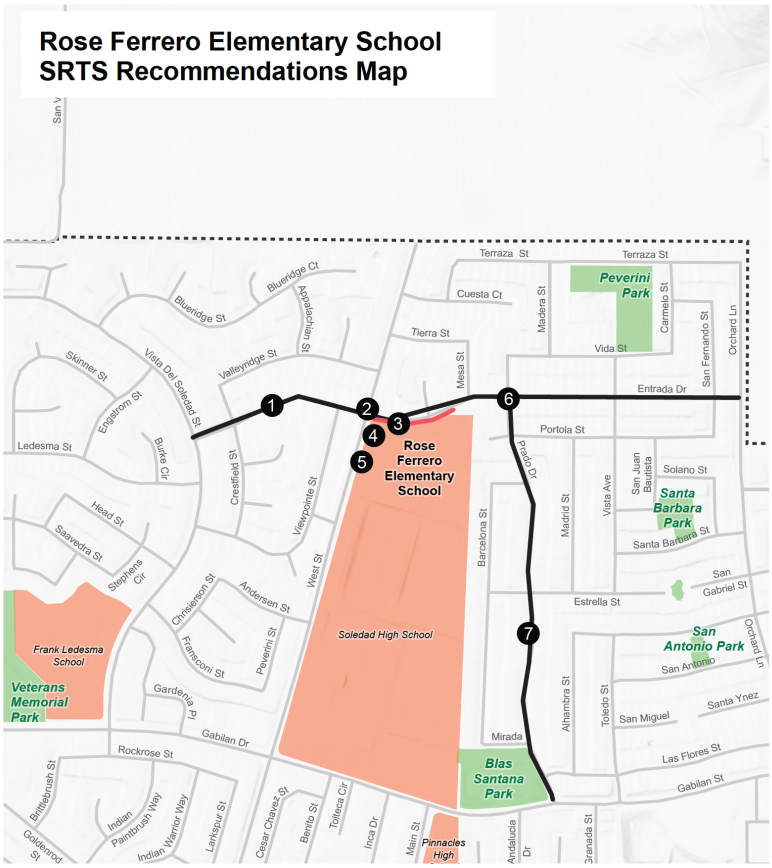

CORRIDOR RECOMMENDATIONS

Traffic Calming

LINEAR RECOMMENDATIONS

Red Curb

BOUNDARIES

School Property

City Limits

Parks

Recommendations (Continued)

5 **School Parking lot:** Consider closing the school drop-off/pick-up loop and require parents to park in the school parking lot during pick-up hours. Students will only be released when a parent arrives at the door for pick-up.

6 **Entrada St and Prado Dr:** Install high-visibility crosswalks on all legs of the intersection. Install curb extensions* on all corners of the intersection.
*Consider quick-build curb extensions.

7 **Prado Dr between Gabilan Dr and Entrada Dr:** Install midblock chokers to prevent speeding and u-turns behaviors near the school.

N 0 0.15 0.3 MILES alta

San Vicente Elementary

San Vicente Elementary School is located in central Soledad adjacent to the new Hartnell College campus, and it draws students primarily from the surrounding neighborhoods (see Figure 24).

Grade levels	Number of students	Students qualifying for free or reduced meals	Students residing within 1 mile of school	Students using active transportation (based on 8 survey responses)
K–6	555	92.8%	87%	63%

Figure 24. Map of San Vicente Elementary School Area

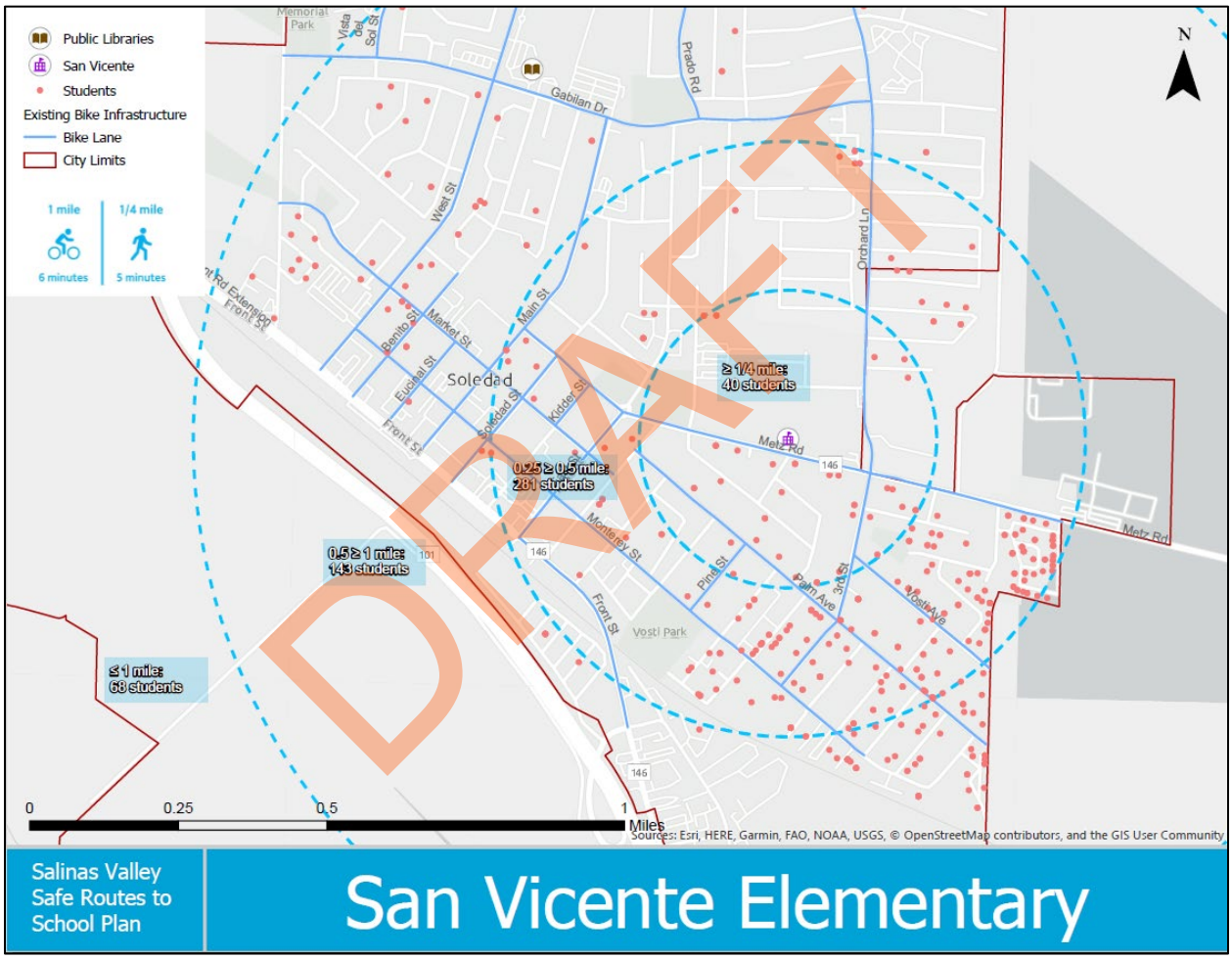

Parent Survey

San Vicente Elementary School parents were asked to complete a bilingual survey about their attitudes toward walking and biking to school in the fall of 2022, and 8 responses were received. The full survey report is in Appendix X.

The survey asked parents to select the most important factors in their decisions whether to allow their children to walk or bike to school. The top issues for parents are listed in the graph below.

Figure 25. Parents' Concerns about Children Walking or Biking to School (respondents could select more than one)

Top Concerns	San Vicente Elementary
Weather or climate	80%
Safety of intersections and crossings	60%
Amount of traffic along route	60%
Speed of traffic along route	40%
Crossing guards	40%
Adults to walk or bike with	40%

Current Infrastructure Conditions

Motorist Conditions

- At the time of the audit, San Vicente Elementary had a small drop-off area in front of its main office off Metz Road, and a parking lot in back of campus off Orchard Lane. Spaces in the lot were reserved for staff.
- At the time of the audit, drop-off took place in small area in the dirt lot at the corner of Metz and Orchard, and on Metz Road in front of the school.
- During the audit there was heavy traffic congestion on Metz Road in front of the school.
- School bus drop-off takes place in the parking lot at the back of campus off Orchard Lane.
- Metz Road is an arterial street, part of the City's truck route network, and a primary emergency response route.

Pedestrian Conditions

- There are complete sidewalks on both sides of Metz Road and Orchard Lane near the school. Sidewalk on the north side of Metz Road ends east of Bryant Canyon Road.
- The intersection of Metz Road and Orchard Lane is a four-way stop with high-visibility crosswalks on three legs.
- There is a high-visibility crosswalk on Metz Road in front of the school, with curb extensions and a pedestrian median island.
- During the audit, there were conflicts between vehicles westbound on Metz Road, vehicles exiting the school parking lot, and vehicles pulling out of on-street parking spaces on Metz. These movements took place at the mid-block crosswalk and resulted in several near-misses when drivers did not check for pedestrians in the crosswalk.
- At the time of the audit, there were crossing guards present at the intersection of Metz Road and Orchard Lane and at the mid-block crosswalk in front of the school.

Bicycling Conditions

- There are class II bike lanes on both sides of Metz Road, Orchard Lane, and 3rd Street. There are no bicycle facilities on other nearby neighborhood streets.

DRAFT

Recommended Infrastructure Improvements around San Vicente Elementary School

Table 7 lists recommendations for San Vicente Elementary School, and the map below shows their locations in relation to the school.

Table 7. Recommendations for San Vicente Elementary

#	Street	Cross Street 1	Cross Street 2	Issue	Recommendation
		3rd Street	Palm Avenue	Pedestrian route to school. Reports of drivers not yielding to pedestrians.	Install curb extensions on all corners of the intersection.* Consider quick-build curb extensions.
		3rd Street	Palm Avenue	Pedestrian route to school. Reports of drivers not yielding to pedestrians.	Restripe all crosswalks at the intersection.
		Orchard Lane	Metz Road	Pedestrian route to school. Large intersection with lots of truck traffic, and the slip lane is less safe for people walking.	Conduct an intersection improvement study.
		Metz Road	In front of school	Crossing guards reported frequent safety concerns with drivers not stopping for people crossing. The stop paddle being used during the audit was small and not easily visible.	Provide crossing guard with a flashing paddle or a larger stop paddle.
		Metz Road	Belle Street	Driver U-turns create conflicts with people crossing the street.	Install “No U-turn” signage on the island on Metz Road to prevent drivers from U-turning around it.
		Orchard Lane	Aromas Place	Pedestrian route to school.	Install high-visibility crosswalk on the east leg of the intersection.
		Orchard Lane	Cadena Drive	Pedestrian route to school.	Install high-visibility crosswalk on the east leg of the intersection.
		Orchard Lane	Cambria Drive	Pedestrian route to school.	Install high-visibility crosswalks on the east and west leg of the intersection.
	Metz Road	Almond Acres	School driveway	Conflicts between drivers pulling away from curb, drivers exiting school lot, and pedestrians crossing	Remove the current loading zone on the north side of Metz Road between Almond Acres and the midblock crosswalk, and make this

DRAFT

				created a significant safety hazard.	a red curb. Move the loading zone to west of the school driveway.
		Dirt lot		Drivers pulling in and out of lot and people walking through lot created an unsafe situation.	Formalize this parking lot with parking spaces.
		School parking lots		Loop is small and did not accommodate drop-off traffic well. Parents exiting lot created conflicts with pedestrians crossing the street.	Consider closing the school drop-off/pick-up loop and require parents to park in the school parking lot or the dirt lot. Students will not be released from the school until the parent is at the door for pick-up.
	Metz Road	Orchard Lane	East Street	Driver observed pulling over to the curb without checking for a student in the bike lane, nearly causing a collision.	Study long-term options for moving the bike lane to be next to the curb, to prevent drivers from crossing the bike lane to park. This could mean creating space on the curb extensions for the bike lane to continue, similarly to the bike lane at the Metz Road/East Street roundabout.
	Metz Road	Orchard Lane	East Street	Driver observed pulling over to the curb without checking for a student in the bike lane, nearly causing a collision.	In the short term, paint the bike lane green in conflict zones, like in front of school loading zones and parking lots.
	Orchard Lane	Terraza Street	Metz Road	Standard bike lanes provide less safety and can be uncomfortable for many people, especially when located next to higher-speed roadways.	Install separated bikeway.

***The City's priority is safety improvements at uncontrolled intersections. Curb extensions at stop-controlled intersections are a lower priority for installation.**

DRAFT

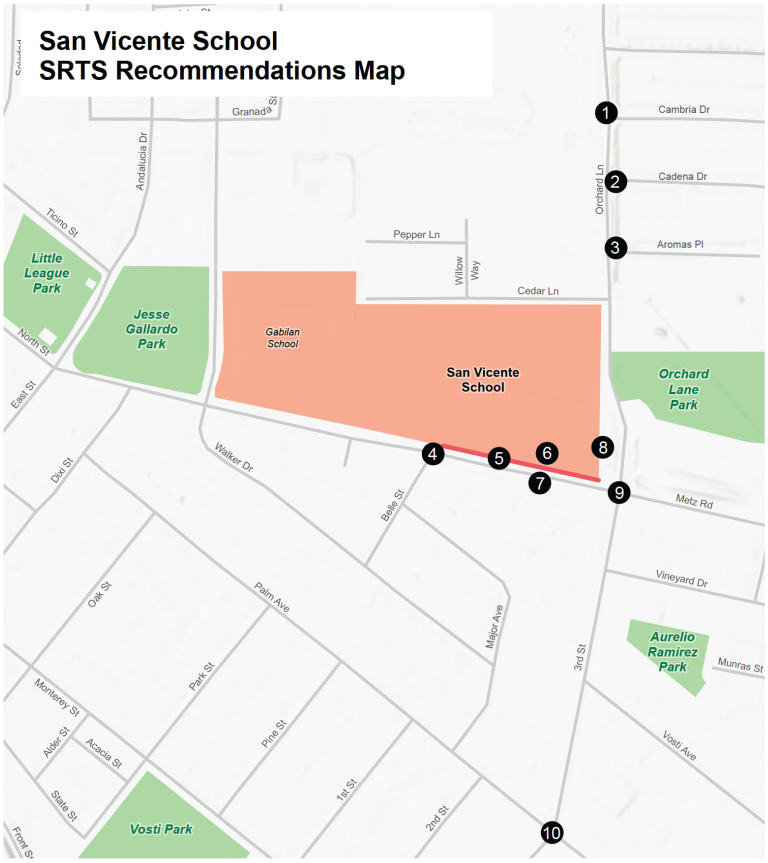

LINEAR RECOMMENDATIONS

Red Curb

BOUNDARIES

School Property City Limits

Parks

Recommendations

1. **Cambria Dr and Orchard Ln:** Install high-visibility crosswalks on the east and west legs of the intersection.
2. **Cadena Dr and Orchard Ln:** Install a high-visibility crosswalk on the east leg of the intersection.
3. **Aromas Pl and Orchard Ln:** Install a high-visibility crosswalk on the east leg of the intersection.
4. **Metz Rd and Belle St:** Install a "No U-Turn" sign on the island on Metz Road to prevent drivers from making U-turns around the island.
5. **Metz Rd between Almond Acres and Belle St:** Remove the current loading zone on the north side of Metz Road between Almond Acres and the midblock crosswalk, and designate this area as a red curb. Relocate the loading zone to the west of the school driveway, between Belle Street and the midblock crosswalk.
6. **School Parking Lots:** Consider closing the school drop-off/pick-up loop and require parents to park in the school parking lot or the dirt lot during pick-up hours. Students will only be released when a parent arrives at the door for pick-up.

Continued on the next page

N 0 0.09 0.17 MILES alta

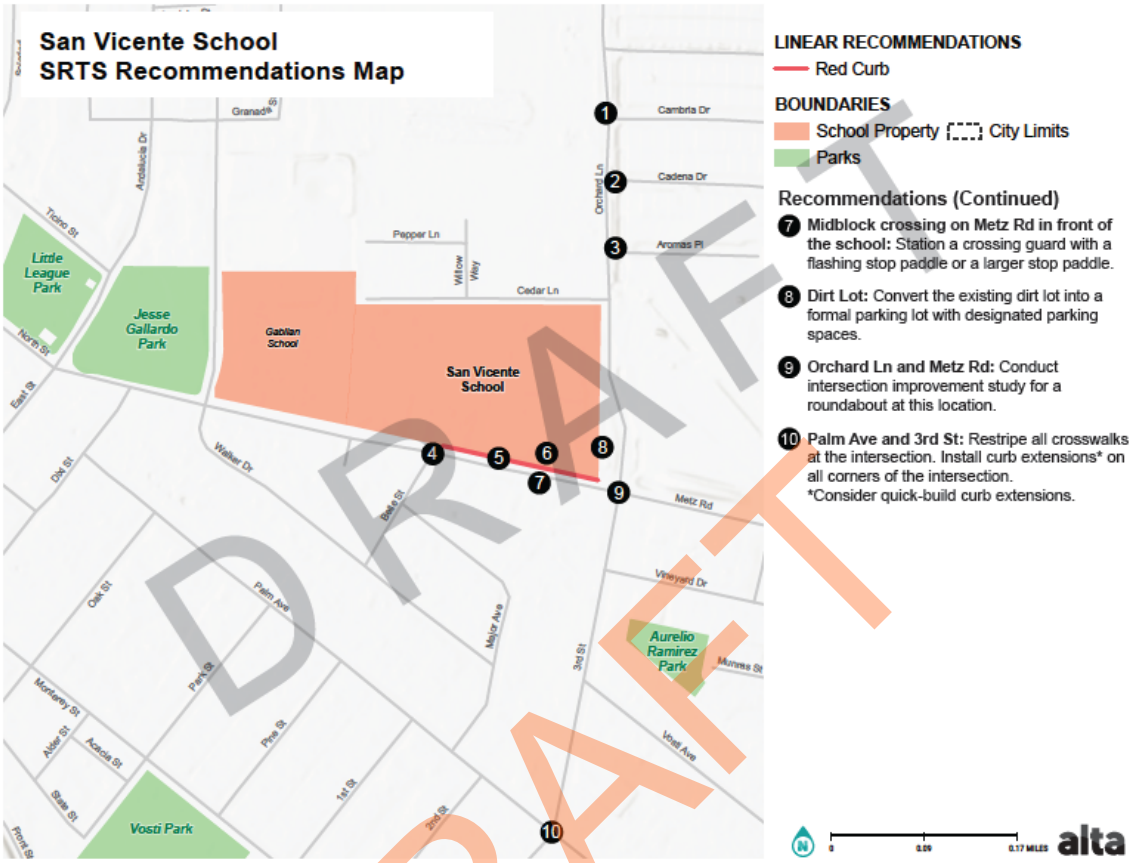
San Vicente School
SRTS Recommendations Map
LINEAR RECOMMENDATIONS
Red Curb
BOUNDARIES
School Property
City Limits
Parks
Recommendations (Continued)
7 Midblock crossing on Metz Rd in front of the school: Station a crossing guard with a flashing stop paddle or a larger stop paddle.
8 Dirt Lot: Convert the existing dirt lot into a formal parking lot with designated parking spaces.
9 Orchard Ln and Metz Rd: Conduct intersection improvement study for a roundabout at this location.
10 Palm Ave and 3rd St: Restripe all crosswalks at the intersection. Install curb extensions* on all corners of the intersection.
*Consider quick-build curb extensions.
Little League Park
Jesse Gallardo Park
Gabilan School
San Vicente School
Aurelio Ramirez Park
Vosti Park
Cambria Dr
Cadena Dr
Aromas Pl
Pepper Ln
Cedar Ln
Metz Rd
Vineyard Dr
Walker Dr
Palm Ave
Major Ave
3rd St
Orchard Ln
Andalucia Dr
Granada
Tioleo St
North St
East St
Oak St
Park St
Pine St
1st St
2nd St
Monterey St
Alder St
Acacia St
State St
Vosti Ave
Munras St
alta

DRAFT

Soledad High

Soledad High School is located in central Soledad, adjacent to Pinnacles High School, and it draws students from the entire city, being the only local high school (see Figure 26).

Grade levels	Number of students	Students qualifying for free or reduced meals	Students residing within 1 mile of school	Students using active transportation (based on 31 survey responses)
9–12	1595	88.8%	75%	29%

Figure 26. Map of Soledad High School Area

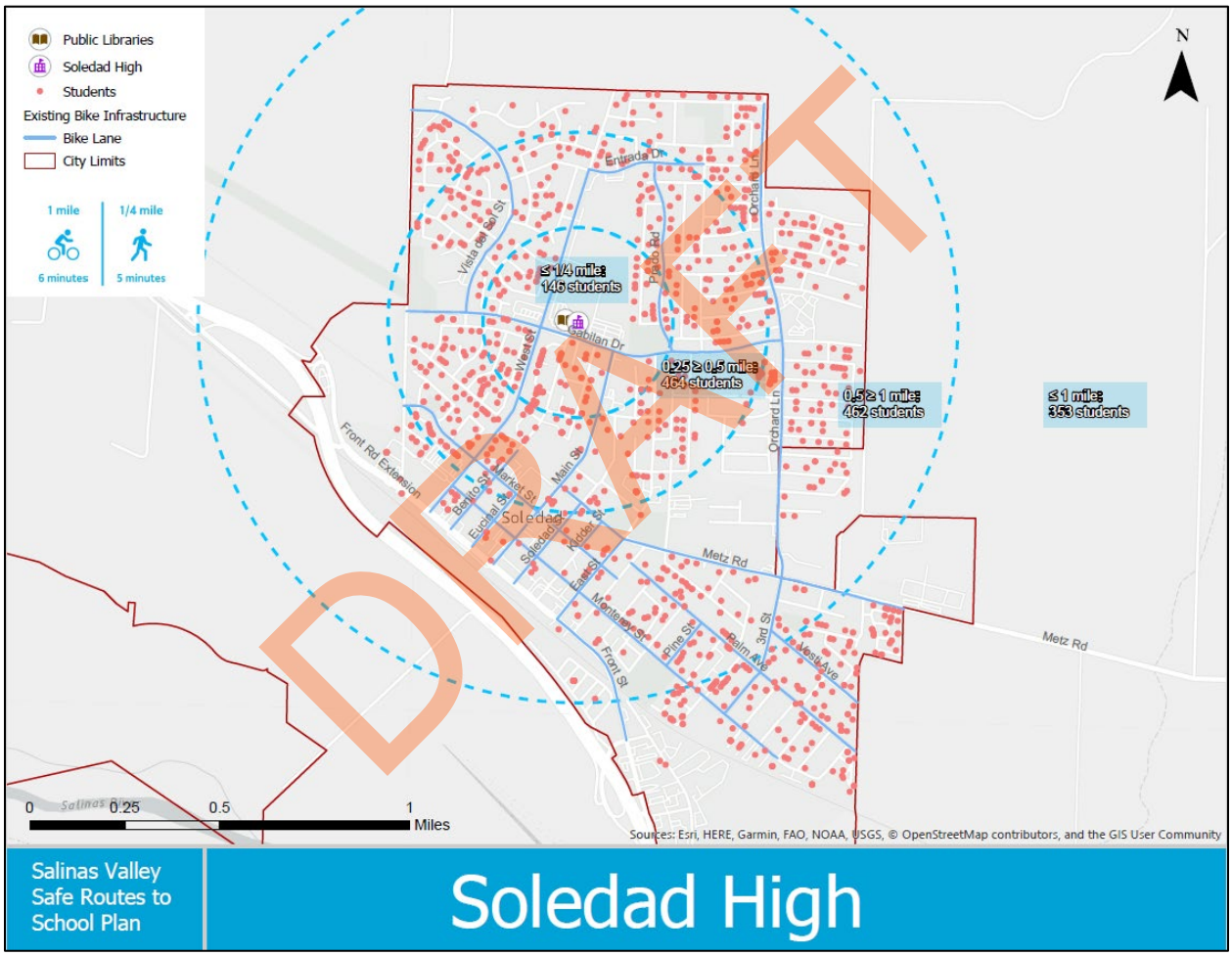

DRAFT

Parent Survey

Soledad High School parents were asked to complete a bilingual survey about their attitudes toward walking and biking to school in the fall of 2022, and 31 responses were received. The full survey report is in Appendix X.

The survey asked parents to select the most important factors in their decisions whether to allow their children to walk or bike to school. The top issues are listed in the graph below.

Figure 27. Parents' Concerns about Children Walking or Biking to School (respondents could select more than one)

Top Concerns	Soledad High
Safety of intersections and crossings	38%
Speed of traffic along route	31%
Distance	31%
Amount of traffic along route	31%
Time	31%

Current Infrastructure Conditions

Motorist Conditions

- Soledad High has a large drop-off loop and parking lot off Gabilan Drive, another circular drop-off loop off Gabilan Drive, and another large parking lot off West Street. There is no reserved staff parking. Student and visitor spaces are located on the lot off Gabilan Drive.
- Drop-off takes place mainly in the circular drop-off loop off Gabilan Drive with some in the parking lot. The volume of traffic on Gabilan creates problems, with drivers turning left into and out of the school loop resulting in significant congestion before and after school.
- School bus drop-off takes place in the designated bus loop adjacent to the parking lot off Gabilan Drive.
- Gabilan Drive is an arterial street and a primary emergency response route. There is traffic congestion on Gabilan Drive before and after school.
- Some drop-offs also occur in the apartment parking spaces along Benito Street. On-street parking is not allowed on Gabilan Drive in front of the school.

Pedestrian Conditions

- There are complete sidewalks on both sides of Gabilan Drive and Benito Street.
- The intersection of Gabilan Drive and Benito Street is uncontrolled but has high-visibility yellow crosswalks across two legs. There is a pedestrian median island in the Gabilan Drive crossing.
- The intersection of Gabilan Drive and Main Street is a three-way stop with high visibility yellow crosswalks on three legs. The fourth leg is the driveway to the high school parking lot.
- At the time of audit, the school principal served as crossing guard at the intersection of Gabilan Drive and Benito Street.
- The intersection of Gabilan Drive and West Street is signalized and has high-visibility yellow crosswalks on all four legs.

Bicycling Conditions

- There are class II bike lanes on both sides of West Street, Main Street, and Gabilan Drive. There is a gap in the eastbound bike lane on Gabilan Drive between Benito Street and Main Street.

DRAFT

Recommended Infrastructure Improvements around Soledad High School

Table 8 lists recommendations for Soledad High School, and the map below shows their locations in relation to the school.

Table 8. Recommendations for Soledad High

#	Street	Cross Street 1	Cross Street 2	Issue	Recommendation
		Benito Street	Gabilan Street	Main school crossing. Safety concerns over drivers exiting loop, through traffic on Gabilan Street, and students crossing the street.	Install stop bars on the south leg of the intersection and ADA-compliant curb ramps on the southwest corner. Install a HAWK signal at the midblock crosswalk. Install "School crossing" pavement markings approaching the midblock crosswalk.
		School drop-off loop		Drivers exiting loop create conflicts with students crossing the street. More space needed for parent drop-off in parking lot.	Allow buses to park in the loop, and allow drop-off and pick-up by parents in the school parking lot. Consider relocating special education bus drop-off.
		Soledad east parking lot		Students walk through the park and parking lot to get to school. If parent drop-off were redirected to the parking lot, this would create conflicts.	Extend the parking lot crosswalk all the way to the east side of the parking lot for students walking from Blas Santana Park. Station a staff member or volunteer to direct pedestrians to use the crosswalk to get to school.
		Blas Santana Park		Students walk through the park and parking lot to get to school. If parent drop-off were redirected to the parking lot, this would create conflicts.	Construct a path through Blas Santana Park to prevent students from walking in all directions through the park.
		West Street	Gabilan Street	Pedestrian route to school. Reports that people do not feel safe crossing here.	Station a crossing guard at this intersection.

DRAFT

		West Street	Gabilan Street	Pedestrian route to school. Large intersection, reports that people do not feel safe crossing here.	Conduct intersection improvement study. Consider protected intersection treatments.
		West Street	Anderson Street	Pedestrian route to school. Project identified in Local Roadway Safety Plan.	Install high-visibility crosswalks and overhead HAWK signal.
		West Street	Anderson Street	Missing school signage.	Install "School crossing" signage at all legs of the intersection.
	Gabilan Drive	San Vicente Road	Rojos Way	Concerns about student safety while crossing four lanes of traffic. Gaps in bike facilities.	Study feasibility of a road diet along entire street.
	Gabilan Drive	San Vicente Road	Rojos Way	Standard bike lanes provide less safety and can be uncomfortable for many people, especially when located next to higher speed roadways.	Install separated bikeway.
	West Street	Front Street	Gabilan Drive	Reports of speeding.	Reduce travel lanes from four to two lanes with landscaped median.
	West Street	Front Street	End of Street	Standard bike lanes provide less safety than separated bikeways and can be uncomfortable for many people, especially when located next to higher-speed roadways.	Install separated bikeway.

DRAFT

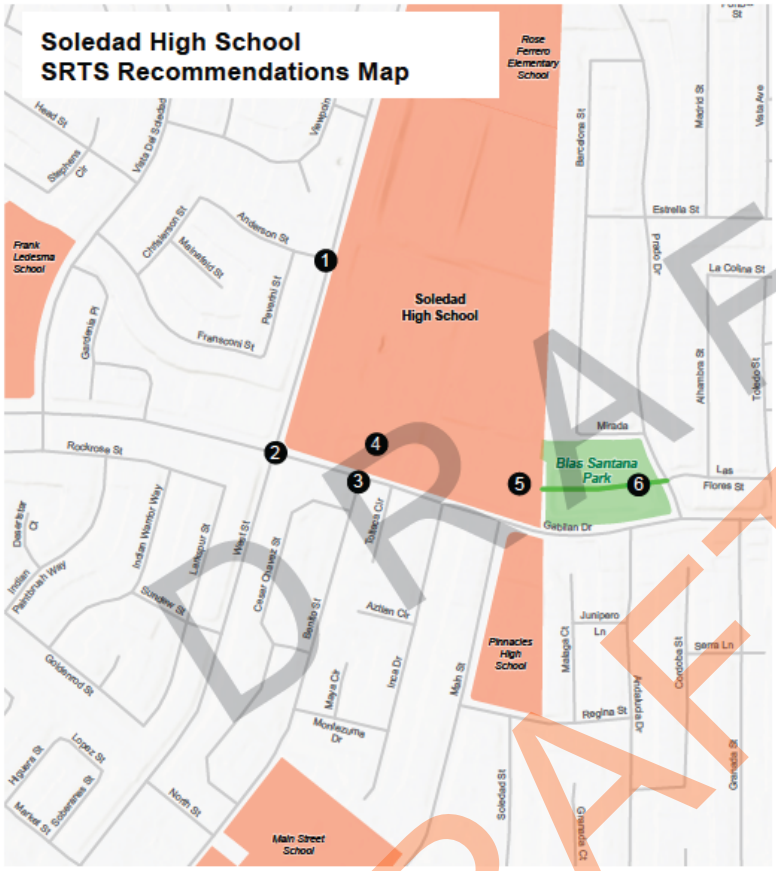
Soledad High School
SRTS Recommendations Map
Rose Ferrero Elementary School
Frank Ledesma School
Soledad High School
Blas Santana Park
Pinnacles High School
Main Street School
Gabilan Dr
Rockrose St
Anderson St
Christenson St
Mansfield St
Panetti St
Franciscini St
Gardenia Pl
Barcelona St
Madrid St
Vista Ave
Estrella St
Prado Dr
La Colina St
Alhambra St
Toledo St
Mirada
Las Flores St
Tolteca Cir
Aztlan Cir
Inca Dr
Maya Cir
Montezuma Dr
Benito St
Main St
Soledad St
Malaga Ct
Junipero Ln
Cordoba St
Sierra Ln
Regina St
Andalucia Dr
Granada St
Granada Ct
Indian Wambo Way
Indian Paintbrush Way
Desert Star Ct
Sunglow St
Lakepoint St
West St
Cesar Chavez St
Goldenrod St
Higuera St
Lopez St
Market St
Soledad St
North St
Vista Del Sol
Viewpoint
Heald St
Stephens Ct
LINEAR RECOMMENDATIONS
Class I
BOUNDARIES
School Property
City Limits
Parks
Recommendations
1 West St and Anderson St: Install high-visibility crosswalks and a Pedestrian Hybrid Beacon (HAWK) signal at this intersection. Install school crossing signage on all legs of the intersection.
2 Gabilan Dr and West St: Station a crossing guard at this intersection. Conduct intersection improvement study for a roundabout at this location. Consider protected intersection treatments.
3 Gabilan Dr and Benito St: Install an ADA-compliant curb ramp on the southwest corner of the intersection. Install a stop bar on the south leg of the intersection. Install school crossing pavement markings approaching the midblock crosswalk. Install a Pedestrain Hybrid Beacon (HAWK) signal at the midblock crosswalk.
4 School Drop-off Loop: Allow buses to park in the loop, and relocate the parent drop-off/pick-up areas to the school parking lot. Consider relocating the drop-off area for special education buses.
Continued on the next page
0
0.1
0.2 MILES
alta

DRAFT

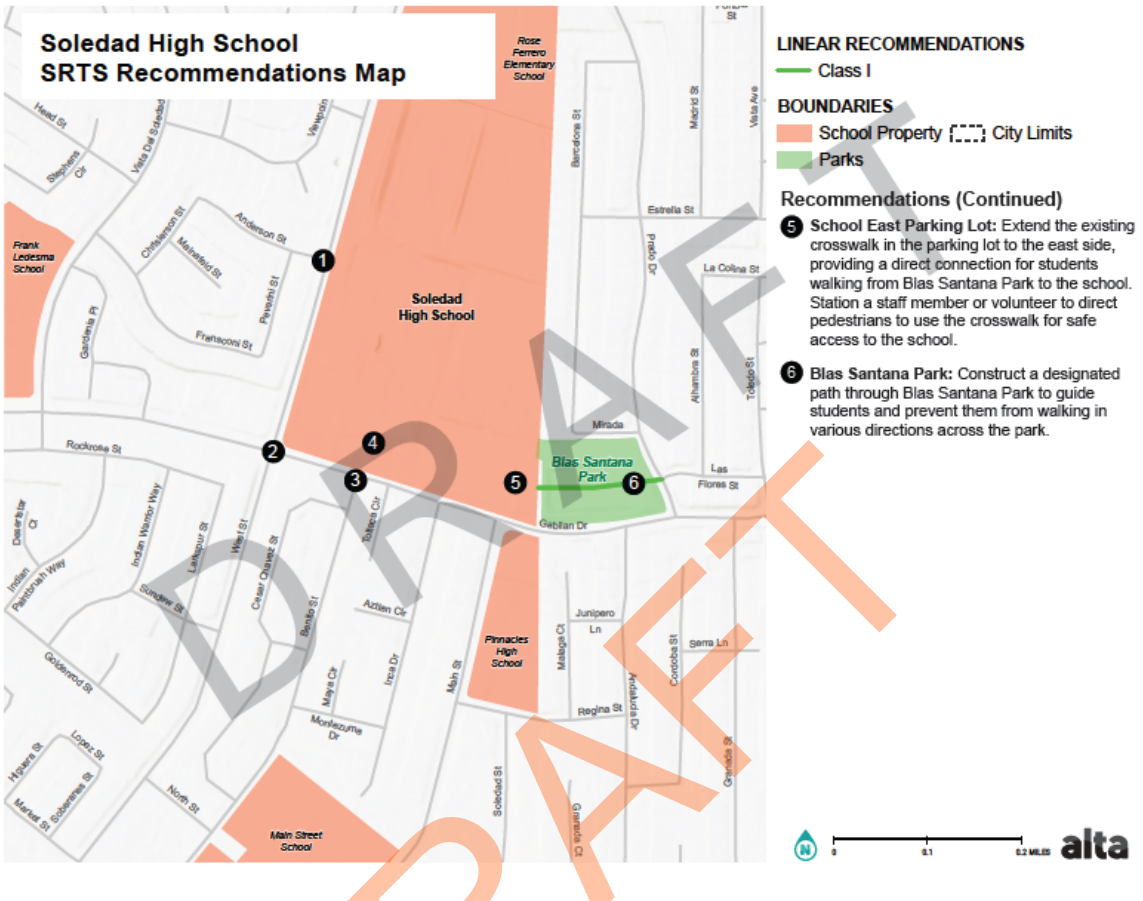
Soledad High School
SRTS Recommendations Map
LINEAR RECOMMENDATIONS
Class I
BOUNDARIES
School Property
City Limits
Parks
Recommendations (Continued)
5 School East Parking Lot: Extend the existing crosswalk in the parking lot to the east side, providing a direct connection for students walking from Blas Santana Park to the school. Station a staff member or volunteer to direct pedestrians to use the crosswalk for safe access to the school.
6 Blas Santana Park: Construct a designated path through Blas Santana Park to guide students and prevent them from walking in various directions across the park.
Soledad High School
Blas Santana Park
Rose Ferrero Elementary School
Frank Ledesma School
Pinnacles High School
Main Street School
Head St
Stephens Cir
Vista Del Soledad
Vaughn
Anderson St
Chittenden St
Mansfield St
Pavoni St
Frantoni St
Gardenia Pl
Rockrose St
Desert Star Ct
Indian Paintbrush Way
Indian Warrior Way
Sundew St
Lakepoint St
Weir St
Cesar Chavez St
Bendo St
Tolteca Cir
Aztlan Cir
Goldenrod St
Maya Cir
Inca Dr
Montezuma Dr
Main St
Hipiera St
Lopez St
Marlat St
Soberanes St
North St
Soledad St
Gabilan Dr
Mirada
Estrella St
Barcelona St
Madrid St
Vista Ave
Prado Dr
La Colina St
Alhambra St
Toledo St
Las Flores St
Malaga Ct
Junipero Ln
Cordoba St
Sierra Ln
Andalucia Dr
Regina St
Granada St
Granada Ct
0
0.1
0.2 MILES
alta
DRAFT
DRAFT

Policy and Program Recommendations

The recommendations below are for all school sites and are arranged by implementing agency and type of program. Some recommendations are listed under multiple organizations that could take the lead on implementation.

Transportation Agency for Monterey County (TAMC)

Education

- Support the Street Smarts traffic-safety education campaign, including information on how to use new infrastructure like roundabouts, class IV separated bikeways, and pedestrian hybrid beacons.
- Install traffic gardens at elementary schools and parks to provide spaces for traffic safety education.
- Promote the TAMC program that allows citizens to report sidewalk and bicycle facility hazards on Soledad roadways.

Encouragement

- Work with schools to develop SchoolPool carpooling programs, with incentives for participation such as priority parking spaces and drop-off lanes.
- Develop a bar-code scanner program that notifies parents when students arrive at school.
- Develop a pilot program to structure school drop-off times and locations by grade level, and align it with education programs.
- Promote the TAMC Safe Routes website (https://saferoutesmonterey.org/) as a community resource for establishing walking school buses, finding safety information, etc.
- Continue to provide bike and skateboard racks to schools through the Bicycle Secure program.

Equity

- Design and implement public outreach and engagement that is broadly accessible and provides means for all to participate.
- Provide an equitable share of transportation investments to underserved, racially diverse communities to improve their health, safety, and quality of life.

DRAFT

School District

Education

- Incorporate traffic safety education into school curriculums.
- Work with TAMC and other Safe Routes to Schools partners to provide bicycle and pedestrian safety education and training at every elementary school.

Encouragement

- Adopt a district-wide policy supporting active transportation projects and programs.
- Establish a Safe Routes to Schools contact at the district level to act as the point person for education, programs, and events.
- Provide orientation to principals and school staff on Safe Routes to Schools programs and best practices, including traffic management.
- Where a bus stop for one school is near another school, relocate the bus stop or adjust pick-up

times to reduce congestion.
- Promote events that encourage active transportation, such as Walk and Bike to School Day.
- Use the TAMC Bicycle Secure program to provide secure bike, scooter, and skateboard parking at each school site.
- Consider the use of electric school buses.

Engagement

- Reassess crossing guard funding and recruiting structures to allow at least one crossing guard per school for both morning drop-off and afternoon pick-up times or develop a volunteer crossing guard program to recruit and motivate volunteers.

City of Soledad: Police, Parks and Recreation, and Public Works Departments

Education

- Train police officers to teach traffic safety, with a focus on driver safety, and accurately report collisions involving bicyclists or pedestrians.
- Incorporate bike/walk safety trainings or helmet giveaways into Parks and Recreation Department messaging, after-school programs, and events.
- Host a public outreach event regarding citywide safety improvements to educate the community on engineering, public works, and police department undertakings that will improve pedestrian safety.

Encouragement

- Support and promote bike and pedestrian encouragement activities such as Bike Month, Ciclovía, and Walk and Bike to School Day.
- Apply for Bicycle Friendly Community designation through the League of American Bicyclists (could involve city staff and community volunteers).

School Sites

Education

- Distribute a traffic circulation plan and bike and pedestrian safety information to parents at the beginning of the school year through all available channels (email, handouts, parent meetings, back to school nights, etc.).
- Hold school safety assemblies for students at the beginning of the school year to go over safe walking, biking, and drop-off practices.
- Pass out bike maps, resource lists, and bike cage information to students every fall, and conduct annual bike safety clinics.
- Incorporate active transportation into social and emotional learning curriculums.
- Incorporate Chalk Your Walk programs into arts curriculums.
- Develop a curriculum for teaching students about the climate impacts of transportation, transportation infrastructure, and the built environment.
- For high school students, promote bus routes for school transportation, develop carpool incentive programs, and offer bike maintenance courses through a Regional Occupation Center

DRAFT

(ROP) program.

- For high school students, expand health leadership groups to include active transportation issues, such as student bike/pedestrian counts, active transportation projects, and Safe Routes to Schools support for younger students.
- Provide information to school staff about active-transportation and carpooling options, including electric bikes.

Encouragement

- Incorporate active transportation and support for Walk and Bike to School Day into existing school health policies.
- Designate an administrative staff member as the Safe Routes to Schools contact at each school.
- Work to achieve Blue Zones Project school certification.
- Host biannual Walk and Bike to School Day events.
- Develop walking and rolling school bus programs with incentives for participation.
- Develop SchoolPool carpooling programs with incentives for participation, including priority parking spaces and drop-off lanes.
- Establish and encourage use of park-and-walk/ride locations.
- Promote and incentivize middle- and high-school bike clubs, mountain bike clubs, and skateboard clubs.
- Promote and incentivize family walking and biking groups to encourage more eyes on the street, potentially through existing parent groups.
- Stagger school start times between grade levels to disperse drop-off traffic.
- Stagger school start times for schools within two blocks of each other.
- Adjust school delivery times to avoid drop-off periods.
- Develop partnerships with arts programs to install public art along routes to schools.
- Add active-transportation information to school staff signatures.
- Pursue grant funding through the Specialized Outride program to bring bikes and bike education to middle schools.

Engagement

- When possible, have school staff or volunteers help with traffic control in parking lots for 15 minutes before and after school.
- Pursue the AAA School Safety Patrol program to engage students in transportation safety (Monterey Park Elementary is a model).

Non-Profits and Monterey County Health Department

Education

- Develop an annual crossing guard training program.
- Develop programs and events to provide parents and guardians with traffic safety education, such as the following:
    - Offer community traffic safety education events on weekends.
    - Provide traffic safety messaging at established parent meetings and events, such as back-to-school nights and spring open houses.

DRAFT

    - Locate traffic-safety education staff members at schools to talk to parents during drop-off.
    - Work with parent leaders to develop parent-driven programs.
    - Provide training and tips on using the school drop-off loop.
- Provide driver safety training targeting youths and seniors. Consider partnering with the Soledad Police Department or insurance companies to provide discounts for participation.
- Provide bike and pedestrian safety training during after-school programs, such as the YMCA and the Boys and Girls Club.
- Provide pedestrian safety education and training to second graders, including classroom education and on-blacktop or neighborhood walking instruction.
- Provide bicycle safety education and training to fifth graders, including classroom education and on-bike safety rodeos taught by certified safety instructors.
- Develop a vertical education program with specific safety messaging for each grade level.
- Develop programs or events to provide family-focused bike- and walk-safety trainings.
- Pass out bike maps, resource lists, and bike cage information to students every fall, and conduct annual bike safety clinics. Work with Family Resource Centers to offer bike and pedestrian education and support.
- Develop a curriculum for teaching students about the climate impacts of transportation, transportation infrastructure, and the built environment.
- For high school students, promote bus routes for school transportation, develop carpool incentive programs, and offer bike maintenance courses through an ROP program.
- For high school students, expand health leadership groups to include active transportation issues, such as student bike/pedestrian counts, active transportation projects, and Safe Routes to Schools support for younger students.
- Support the Street Smarts traffic safety education campaign, including information on how to use new infrastructure like roundabouts and sharrows.
- Promote City programs allow citizens to report sidewalk hazards.

Encouragement

- Provide orientation for principals and school staff on Safe Routes to Schools programs and best practices.
- Develop year-round walking or rolling school bus programs with incentives for participation.
- Develop a walking/rolling school bus toolkit and training presentation for parent volunteers.
- Develop SchoolPool carpooling programs, with incentives for participation such as priority parking spaces and drop-off lanes.
- Develop a social media campaign focused on students and school staff to encourage more biking and walking.
- Consider a program to provide free bus passes to students.
- Offer middle- and high-school bike clubs, mountain bike clubs, scooter clubs, and skateboard clubs.
- Coordinate family walking and biking groups to encourage more eyes on the street.
- Develop and promote earn-a-bike or bike-loan programs, in which students earn a bike by riding frequently or maintaining perfect attendance. Explore partnerships with the Soledad Police

DRAFT

Department to provide abandoned bikes to students.

- Organize helmet giveaway events for students and families.
- Develop programs to install public art along routes to schools.
- Consider a neighborhood grant program to support programs such as walking school buses.

Equity

- Include members of disadvantaged communities as stakeholders and consider language accessibility in program development. Emphasize the relationship between health and active transportation in all program messaging.
- Provide bilingual materials and staff for all programs.
- Conduct an audit of past policies that have limited access to safe transportation options, and propose new policies to address those inequities.

Monterey-Salinas Transit (MST)

Encouragement

- Consider a program to provide free bus passes to students.
- Expand bus routes to serve middle and high schools that are not currently served by MST, including Soledad High and Main Street Middle.

DRAFT

Soledad Safe Routes to Schools Plan Chapter 6D. Implementation, Reporting, and Maintenance

Implementation and Reporting

The projects in this plan will be implemented over time as funding becomes available. With limited funding, the City of Soledad must decide how to prioritize the recommendations.

Some projects that are low cost and have community support can be incorporated into the City's maintenance programs and installed using maintenance funds. For larger projects, leveraging local funds with additional grant funding will be critical. There are also projects that require either private property acquisition or coordination with Caltrans. Though these are high-cost projects that will take many years to fund, design, and construct, they are included here as part of a long-term vision for the future of transportation in Soledad.

The City of Soledad has the opportunity to make bicycle and pedestrian improvements as part of ongoing road maintenance. The City is required to upgrade curb ramps to Americans with Disabilities Act standards during major road resurfacing projects. Many resurfacing projects also provide a chance to restripe roadways and install improvements such as high-visibility crosswalks, class IIB buffered bike lanes, green bike lane treatments, and class IV separated bikeways for a relatively low additional cost. Traffic signal maintenance and upgrades also provide opportunities to install countdown pedestrian signal heads, leading pedestrian interval signal phasing, and video detection for bicyclists. City staff will review the Safe Routes to Schools Plan project list when planning maintenance projects to look for ways to incorporate bike and pedestrian improvements. This allows for a highly cost-effective strategy for implementing the projects included in this plan.

Installing bicycle and pedestrian improvements as part of regularly scheduled maintenance is part of the "quick-build" approach to bicycle and pedestrian facilities, in which local jurisdictions construct facilities faster using low-cost materials. Materials such as paint, planters, and plastic posts are less expensive initially than new pavement or changes to curb alignments, but they have greater ongoing maintenance costs. Quick-build is best suited to temporary trial projects that can be adjusted in response to the success of the design and community feedback. More information on the quick-build approach can be found in the *Quick-Build Guide* developed by the California Bicycle Coalition and Alta Planning + Design.[1]

Projects from this plan can also be installed as future development occurs in Soledad. This Safe Routes to Schools Plan provides a list of projects that can be used to mitigate impacts of land-use development by reducing vehicle miles traveled. In 2013, California lawmakers approved Senate Bill 743, which considers vehicle miles traveled as a metric to determine impacts in transportation analysis under the California Environmental Quality Act (CEQA). Jurisdictions are no longer required to use traffic

[1] California Bicycle Coalition website, Quick Build Bikeway Networks: https://www.calbike.org/our_initiatives/quick-build-bikeway-networks-for-safer-streets/.

DRAFT

congestion or level of service as a metric, though they can still enforce those through consistency with the agency's General Plan. In addition, the traditional level-of-service metric may still be relevant to CEQA as it relates to impacts on public services, including emergency response and transit. The state released guidelines in 2018 that recommended the use of vehicle miles traveled as the key metric for analyzing transportation impacts. The Safe Routes to Schools Plan is a resource that the city and developers can use for project ideas to improve biking and walking facilities and reduce vehicle miles traveled.

This chapter includes a list of roadways that are high priorities for future improvements on the basis of criteria aligned with the vision and goals of this plan. Individual projects will be prioritized for funding through the Monterey County Regional Transportation Plan and the City's Capital Improvement Program (CIP). Reporting on project funding, design, and construction will be provided through updates to the city council and the public during the annual CIP update process.

For projects within Caltrans rights of way, all improvements must be consistent with Highway Access Management Plans, and Caltrans maintenance agreements are required before new construction.

Corridor Prioritization

Key routes to school in Soledad were ranked to help City staff and decisionmakers prioritize projects and identify the most competitive for various grant opportunities. Grant programs often prioritize larger-scale, corridor-wide improvements, and future grant applications are likely to focus on improvements to one or more streets in Soledad rather than individual projects.

The corridors below were evaluated using four criteria aligned with the vision and goals of this plan and with common grant application criteria. Equity scores are based on two sources: free or reduced price meal data, as an indicator of family income, and the Healthy Places Index map, which shows data on health indicators such as education, job opportunities, and clean air and water. Each corridor was assigned a number from 0 to 100 based on the criteria in Table 9.

Table 9: Criteria for Corridor Prioritization

Criteria	Description	Max Points
Safety	Points awarded for bicycle and pedestrian collisions in the last 10 years within 150 ft of the project, for a max of 30: • 5 points per fatal or severe-injury collision • 1 point per other visible injury or complaint-of-pain collision	30
Access to Key Destinations	10 points for every school within 500 ft of the corridor, and 5 points for every park, library, and recreation center, for a max of 25.	25
Equity	20 points if the project is located within an area designated as disadvantaged.	20
Community-Identified Need	15 points if the project or location was identified by 10+ members of the community during project outreach. 10 points if the project or location was identified in one or more community planning documents.	25
	TOTAL	100

DRAFT

Prioritized Corridor List

Table 10, below, shows the highest-priority corridors for Safe Routes to Schools improvements in the City of Soledad. High-priority corridors are also shown below on Figure 28.

Table 10: Prioritized Corridors

Street	Cross Street 1	Cross Street 2	Score
Main Street	Gabilan Drive	Front Street	**95**
Orchard Lane/3rd Street	Palm Avenue	Terraza Street	**80**
Gabilan Drive	San Vicente Road	Bryant Canyon Road	**80**
Metz Road	East Street	Tiburon Place	**80**
Market Street	San Vicente Road	Dixi Street	**75**
Monterey Street	West Street	8th Street	**70**
West Street	Front Street	Cuesta Court	**65**
Front Street	East Street	Nestles Street	**50**

DRAFT

Figure 28. Map of High-Priority Corridors in Soledad

Participatory Budgeting Funded Projects

The Soledad Steering Committee led a participatory budgeting process in which community members decided democratically how to spend part of the public budget. TAMC allocated $250,000 per city to implement projects from the Safe Routes to Schools Plan, and Steering Committees developed a process for community members to vote on which projects should be funded.

The Soledad election was held in May 2023. People over the age of 14 who lived or worked in Soledad were eligible to vote, and voting could be done online or at 11 sites throughout the city. In total, 246 ballots were received, which identified four projects as the highest priorities for community members. Steering Committee members presented the results to the Soledad City Council for approval in November 2023 and received approval. Projects funded through participatory budgeting will begin implementation as soon as 2025. The City of Soledad will construct as many recommendations as is feasible with current construction costs.

Table 11: Participatory Budgeting Funded Projects

School	Location	Project Description
Jack Franscioni	Intersection of Orchard Lane and Gabilan Drive	• Conduct roundabout study. • Station a second crossing guard at the intersection. • Install ADA-compliant curb ramps on the northeast, northwest, and southwest corners of the intersection. • Install stop bars and flashing stop signs on all legs of the intersection. • Install high-visibility crosswalk on south leg of the intersection.
Pinnacles High	Intersection of Main Street and Gabilan Drive	• Conduct roundabout study. • Designate two parking spaces on Main Street as a white curb loading zone for school drop-off and pick-up. • Install curb extensions on the southeast and southwest corners of the intersection. • Station crossing guards at this intersection, ideally one on the east and one on the west crosswalk.
Soledad High	Intersection of Benito Street and Gabilan Street	• Install stop bars on the south leg of the intersection. • Install ADA-compliant curb ramps on the southwest corner of the intersection. • Install "School crossing" pavement markings approaching the midblock crosswalk.
San Vincente Elementary	Orchard Lane, Metz Road	• Install high-visibility crosswalks across side streets at Aromas Place, Cadena Drive, and Cambria Drive. • Remove the current loading zone on the north side of Metz Road between Almond Acres and the midblock crosswalk, and make this a red curb. Move the loading zone to be west of the school driveway. • Formalize the dirt parking lot, and stripe parking spaces.

DRAFT

Funding Sources

Table 12 lists potential grant and program funding sources that can be used to implement the projects described in this plan. Most state and federal funding sources require local matching funds.

Table 12: Funding Sources for Active Transportation

Funding Source	Capital Improvements	Evaluation & Planning	Education, Encouragement & Enforcement Programs	Maintenance
Local				
Measure X: Regional Sales Tax	X	X	X	X
Transportation Development Act	X	X	X	X
City General Funds	X	X	X	X
City Gas Tax Revenues	X	X	X	X
Foundations	X	X	X	
Businesses and Corporations	X		X	
Regional Surface Transportation Program: Competitive Funds	X	X	X	X
Regional Surface Transportation Program: Formula Funds	X	X	X	X
Developer Impact Fees	X			
State				
Active Transportation Program	X	X	X	
California Office of Traffic Safety			X	
AB 2766	X	X	X	
State Highway Operations and Protection Program (SHOPP)	X	X		
State Transportation Improvement Program (STIP)	X			
Federal				
Surface Transportation Block Grant/Regional Surface Transportation Program Exchange (STBG/RSTPX)	X	X	X	
Highway Safety Improvement Program	X		X	
Rebuilding American Infrastructure with Sustainability and Equity (RAISE) Program	X			

DRAFT

Safe Streets 4 All Program	X			
American Rescue Plan Act	X	X	X	X

Measure X

To address an ongoing shortage of transportation funding, Monterey County voters approved Measure X in 2016, establishing a 3/8-percent sales tax that will provide approximately $20 million annually for local transportation projects over the next thirty years. Sixty percent of the funds are distributed by formula to cities and the County of Monterey for road maintenance, repair, and safety projects. This funding, together with funding in the Pedestrian and Bike Safety and Mobility category, can be used for Safe Routes to Schools projects.

Figure 29: Measure X Expenditure Categories

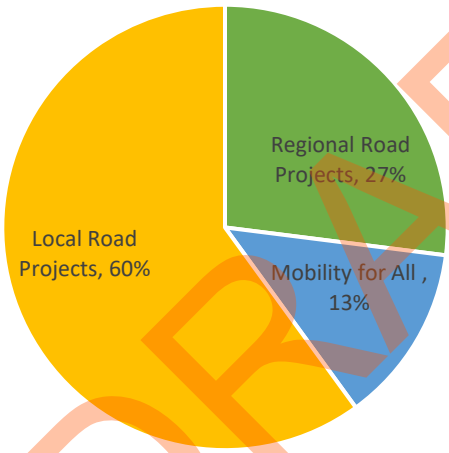

Source: Transportation Agency for Monterey County.

DRAFT

Maintenance

The need for maintenance of bicycle and pedestrian facilities is often reported by residents walking and bicycling on local roadways. There are several ways to report maintenance issues in and around the City of Soledad:

- Maintenance issues in Soledad can be reported through the City of Soledad website: https://www.cityofsoledad.com/report-issue/.
- The Transportation Agency for Monterey County (TAMC) maintains the Bicycle Service Request program through a webpage on which any issue in Monterey County related to bicycle safety can be reported: https://www.tamcmonterey.org/bike-service-request-form.[2] Reports are forwarded to the appropriate jurisdiction for action.

[2] Transportation Agency for Monterey County, 2024. Measure X. Source: https://www.tamcmonterey.org/measure-x.

- Maintenance issues on state highways can be reported to Caltrans: https://csr.dot.ca.gov/.

The City of Soledad is responsible for maintaining pavement on roads that it has accepted for maintenance. The City also maintains signage, signals, striping, guardrails, and other traffic-safety devices, walls and other retaining structures, and drainage facilities serving the roadway.

The City of Soledad currently employs the following maintenance policies and procedures to keep bicycle and pedestrian facilities in good repair:

- Bike lanes that are contiguous with any City-maintained roadway are maintained by the City as part of the roadway. The City strives to sweep bike lanes as part of its normal street sweeping program.
- According to the California Streets and Highways Code Section 5610, adjacent property owners are responsible for the maintenance of sidewalks along the frontage of their properties.
- According to the Streets and Highways Code, a set amount of maintenance funding is provided by the gas tax, and the City is charged with maintaining roadways as well as those funds allow. The City of Soledad has a Pavement Management Program (PMP) which has evaluated the street network and determined a pavement condition index for each segment. The PMP is updated periodically and serves as the basis for directing the maintenance, repair, and rehabilitation of street segments within the City. The City works to maximize the funding it receives to provide the greatest benefit to the greatest number of road users.

DRAFT

Safe Routes to School

Salinas Valley Safe Routes to School Plan

Draft Plan

Soledad City Council
November 6th, 2024

Project Overview

- 22 schools in Gonzales, Soledad, Greenfield & King City
- Partnership between TAMC, MCHD, Ecology Action, Cities, and school districts
- Funded by Caltrans Planning Grant & Measure X
- 2022 – 2024
- Steering Committees for each city

Plan Goals

- Improve safety for people walking and biking
- Reduce traffic congestion
- Healthier kids
- Support future grant applications

A Community-Based Process

Parent Outreach
Fall 2022

Walking Audits & Parent Surveys
Fall 2022

Recommendations
Spring 2023

Steering Committee
2023 - 2024

Pilot Project
Fall 2023

Final Plan
2024

Draft Plan Outreach

- 12 presentations at parent meetings
- 208 responses to parent survey, 1,824 responses to student survey
- 119 responses to Front Street pilot project survey
- 246 community votes during Participatory Budgeting process

Draft Plan Overview

- High-level goals and objectives
- List of prioritized corridors
- Citywide corridor recommendations
- Infrastructure and program recommendations for each school

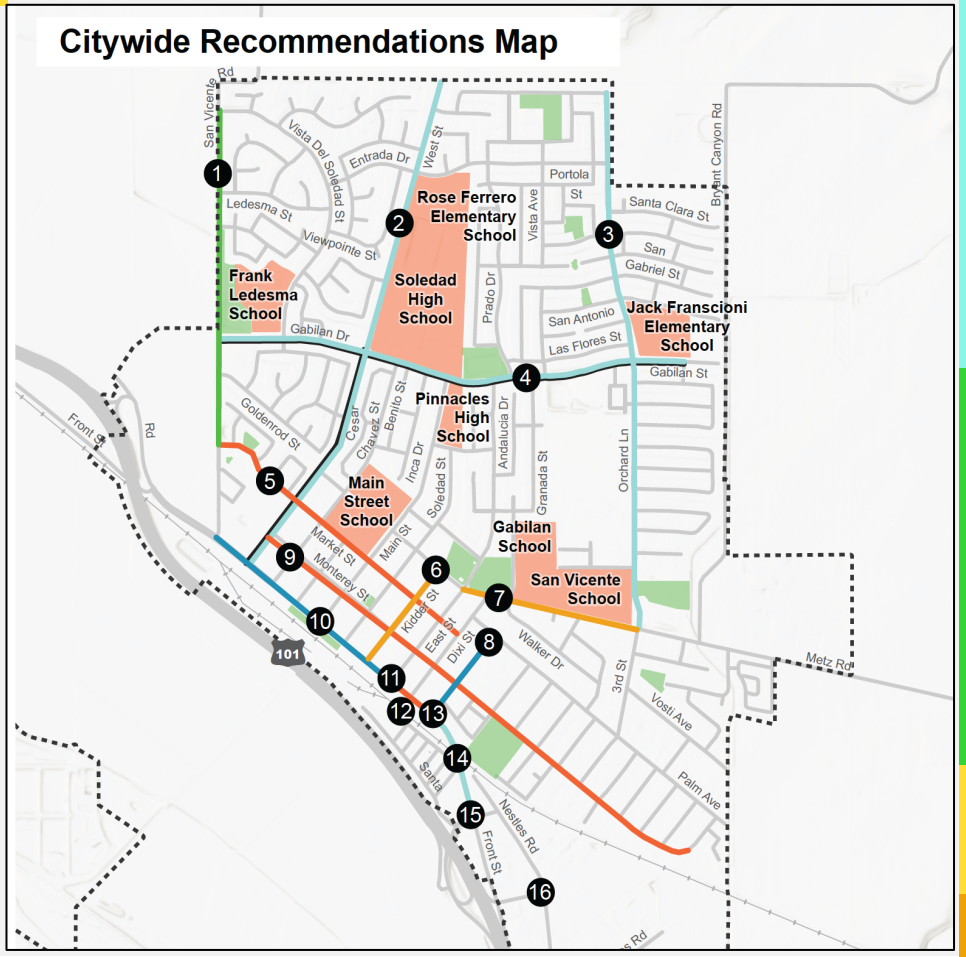

Plan Implementation

- Plan is a tool to help the City prioritize projects and seek funding
- Some projects can be implemented during regular road maintenance
- Quick-build projects offer lower-cost option to implement projects

Image source: City of Austin

Safe Routes to School

Questions or Comments?

AGENDA ITEM NO. 2.

CITY OF SOLEDAD
STAFF REPORT

SUBJECT: **Resolution No. 6172, a Resolution of the City Council of the City of Soledad Approving a Contract Change Order for Construction Services with Monterey Peninsula Engineering for the Amount of $123,000 plus a 20% Construction Contingency ($24,600) for a total Not-to-Exceed Amount of $147,000 for the Front Street Maintenance Project and Authorizing the City Manager to Execute Said Contract Change Order on Behalf of the City of Soledad**

TO: **Honorable Mayor Anna Velazquez and City Council**

FROM: **Alex Ramos, Assistant Engineer; Don Wilcox, Public Works Director**

THROUGH: **Megan Hunter City Manager**

MEETING DATE: **November 6, 2024**

Recommendation

It is recommended that the City Council of the City of Soledad Consider and Adopt Resolution No. 6172, "A Resolution of the City Council of the City of Soledad Approving a Contract Change Order for Construction Services with Monterey Peninsula Engineering for the Amount of $123,000 Plus a 20% Contingency for a Total Not-to-Exceed Amount of $147,600 for the Front Street Maintenance Project and Authorizing the City Manager to Execute said Contract Change Order on Behalf of the City of Soledad".

Executive Summary

As part of the ongoing Front Street Maintenance Project, staff have discussed ways to incorporate additional improvements to bring vibrancy to the Downtown and facilitate the future development of the city- owned properties. Thus, Public Works staff requested contractor pricing and a proposed change order to install two 4-inch conduits at three selected locations to provide future power (Primary and Secondary) to the city-owned parcels. Since this work will involve trenching across Front Street, a construction contingency is also recommended as part of the change order to account for any potential utility conflicts for installation of this conduit. The Council has contemplated this work as part of the identified ARPA project to facilitate the development of the Shipping Container Village. Therefore, staff recommends that the Council approve the Contract Change Order in the amount not to exceed $147,000.

Background

Front Street is an existing two-lane arterial that runs from H. De La Rosa (4th Street) to Moranda Road,

paralleling Highway 101 and spans about 1.5 miles in length. Over the years, Front Street has undergone a major revamp as part of the 2003 Front Street Revitalization Project in which a portion of the street corridor from Benito St. to East St. provided two 14' travel lanes, diagonal parking on both sides, decorative streetlights in the downtown corridor, a 10' landscape median, 14' sidewalk on the west and 10' sidewalk on the east. Additionally, curb extensions (bulb-outs) were included and located at five intersections with benches, seating opportunities, and colored, decorative concrete sidewalks.

Due to existing tree root uplift, significant curb, gutter, and sidewalk areas have been damaged, resulting in drainage issues, ADA, and pedestrian accessibility issues, and even preventing certain businesses from opening their front doors. Bollards at the curb extensions are in disrepair and could be enhanced to provide better lighting for pedestrian and vehicular traffic [MR1] . Four traffic signal lights are located along the corridor at San Vicente Road, East Street, Oak Street, and Nestles Road. North of Benito St. and south of East St., the street geometrics include center turn pockets, bike lanes, parallel parking, and standard curb, gutter, and sidewalk.

On August 3, 2022, City Council approved the consulting services agreement Task Order No. 4 with Harris & Associates to Provide Engineering Support Services for the Front Street Maintenance Project for $221,079.

On May 1, 2024, City Council approved the consulting service agreement with Wallace Group for Construction Management and Inspection Services for the Front Street Maintenance Project for a total not-to-exceed amount of $329,813.

On May 15, 2024, City Council approved a contract for Construction Services with Monterey Peninsula Engineering (MPE) for a total not-to-exceed amount of $3,916,245 for the Front Street Maintenance Project.

[MR1]Where possible we want to avoid making outright admissions as to deficiencies in City improvements and facilities. This kind of language could be used in a lawsuit against the City after an accident.

Review & Analysis

The Front Street Maintenance Project has been progressing smoothly with the completion of the colored concrete, the removal of light bollards, the removal of trees, and the additional concrete items at a few locations along the corridor. As previously mentioned to the Council during the award of the contract for construction services with MPE for the Front Street Maintenance Project, staff have discussed incorporating enhancements such as decorative crosswalks, art, lighting, and landscaping to bring attention and ultimately transform the Downtown. Staff is currently working on pricing to bring some of these items forward to a later date for council consideration and approval.

In addition to these enhancements, staff is recommending that MPE bring power connections to the city-owned parcels across the street. To allow for the future construction of the Shipping Container Village and provide development-friendly parcels, staff has asked for contractor pricing for the installation of conduit across Front Street to provide power from the East Side PG&E transformers of Front Street to the city-owned parcels on the West Side. In anticipation of future development and the future Shipping Container Village, as part of this project, it is proposed that MPE will be installing two 4-inch conduits (Primary and Secondary Power) that will be available for the three identified city-owned parcels across Front Street. Linking this work to the roadway project will eliminate the need to tear up the newly completed street after this project is completed. Sewer connections have already been

provided to the two vacant city-owned lots, and incorporating the conduits will now enable these lots to be fully connected to the utility services. The three parcels supported by this project include:

APN: 022-211-011 – Park & Ride Lot
022-211-017 – Vacant City-Owned Parcel Between Soledad St & Kidder St.

022-211-022 – Vacant City-Owned Parcel Between Kidder St. & East St.

If it is determined that the existing transformers found on the East Side of Front Street have the capacity and are adequately sized to provide power to the vacant lots through a single transformer, the City will only be running conduit across Front Street at two locations as opposed to three, resulting in a credit. Additionally, Staff recommends a construction contingency as the contractor may encounter potential conflicts with unknown elements found while trenching across the street. Front Street used to be the old Highway 101 route before becoming Front Street and as result, staff have encountered structural sections in the old concrete while trenching across it and other utilities that were not addressed with the conversion. The contingency of $24,600 will allow the project to proceed if any of these issues are encountered during construction.

Financial Considerations

This Contract Change Order is part of the Front Street Improvement Project and is to be funded by the allocation of the American Rescue Plan Act (ARPA) from the previous reallocation taken to council earlier this year.

Original Construction Contract Amount - $3,729,757
Construction Contingency -$186,488 Previously Approved

CCO 1 - $123,000 (Funded through ARPA)
20% Contingency ($24,600)

New Construction Contract Amount – $3,940,845

Alternatives

- Approve the resolution as presented; or
- Modify the resolution; or
- Do not approve the Resolution. This is not recommended as the items will promote future growth and development opportunities for the City in the core Front Street Corridor.

Planning/CEQA

The proposed project is categorically exempt under Class 1 Existing Facilities, having met the qualifying criteria provided under CEQA Guidelines Section 15301. Class 1 consists of the operation, repair, maintenance, permitting, leasing, licensing, or minor alteration of existing public or private structures, facilities, mechanical equipment, or topographical features involving negligible or no expansion of existing or former use. Section 15301 provides some, but does not limit the project scope to, examples of such projects, existing highways and streets, sidewalks, gutters, bicycle and pedestrian trails, and similar facilities (this includes road grading for the purpose of public safety and other alterations such as the addition of bicycle facilities, including but not limited to bicycle parking, bicycle-share facilities and bicycle lanes, transit improvements such as bus lanes, pedestrian crossings, street trees, and other similar alterations that do not create additional automobile lanes). As detailed

above, the Front Street Maintenance Project would be categorized under this description.

Public Notice Requirements

None required.

Attachment(s):
Resolution No. 6172
Exhibit A

RESOLUTION NO. 6172

A RESOLUTION OF THE CITY COUNCIL OF THE CITY OF SOLEDAD APPROVING A CONTRACT CHANGE ORDER FOR CONSTRUCTION SERVICES WITH MONTEREY PENINSULA ENGINEERING FOR THE AMOUNT OF $123,000 PLUS A 20% CONTINGENCY ($24,600) FOR A TOTAL NOT-TO-EXCEED AMOUNT OF $147,600 THE FRONT STREET MAINTENANCE PROJECT AND AUTHORIZING THE CITY MANAGER TO EXECUTE SAID CONTRACT CHANGE ORDER ON BEHALF OF THE CITY OF SOLEDAD

WHEREAS, Front Street is an existing two-lane arterial that runs from H. De La Rosa (4th Street) to Moranda Road, paralleling Highway 101, and spans about 1.5 miles in length; and

WHEREAS, over the years, Front Street has undergone a major revamp as part of the 2003 Front Street Revitalization Project in which, sidewalks parking, landscaping, and street configurations were addressed; and

WHEREAS, due to existing tree uproot issues experienced along the downtown Front Street Corridor, significant curb, gutter, and sidewalks have been damaged resulting in drainage issues, ADA and pedestrian accessibility issues, and preventing certain businesses from opening their front doors; and

WHEREAS, the Front Street Maintenance Project will address the pavement treatment and address the existing issues caused by the tree root uplift along the Front Street Downtown corridor along with safety concerns; and

WHEREAS, as previously discussed during the Council approval of the Construction Services with Monterey Peninsula Engineering (MPE), Staff is planning and in discussions of potential enhancements under the Front Street Maintenance Project in the form of decorative crosswalks, art, lighting, and other various components to bring attention and ultimately transforming the core Front Street Downtown; and

WHEREAS, to promote growth and provide development-friendly and shovel ready parcels, Staff requested pricing from the contractor for the installation of conduits across Front Street to provide power from the East Side transformers of Front Street to the City-owned parcels on the West Side; and

WHEREAS, in anticipation of future development and the future Container Village, as part of this project, MPE will be installing two 4-inch conduits (Primary and Secondary) that will be available for any development to access to serve any of three identified city-owned parcels across Front Street eliminating the need to tear up the newly completed street and associated costs; and

WHEREAS, the identified city-owned parcels are as follows:

APN: 022-211-011 – Park & Ride Lot

022-211-017 – City Owned Parcel Between Soledad St & Kidder St.
022-211-022 – City Owned Parcel Between Kidder St. & East St.; and

WHEREAS, Staff recommends a construction contingency as the contractor may encounter potential conflicts performing this work while trenching across the street as it once used to be the old Highway 101 route before ultimately becoming Front Street; and

WHEREAS, staff, therefore, recommends approval of a contract change order for Construction Services with MPE for the amount of $123,000 plus a 20% construction contingency (24,600) for a total not-to-exceed amount of $147,600 for the Front Street Maintenance; and

WHEREAS, this contract change order and construction contingency is part of the enhancement for the core Front Street Downtown and is to be funded by the allocation of the American Rescue Plan Act (ARPA) from the previous reallocation taken to council earlier this year; and

WHEREAS, this contract change order and construction contingency is part of the enhancement for the core Front Street Downtown and is to be funded by the allocation of the American Rescue Plan Act (ARPA) from the previous reallocation taken to council earlier this year; and

WHEREAS, this project is Categorically Exempt under Class 1 Existing Facilities, having met the qualifying criteria provided under CEQA Guidelines Section 15301.

NOW THEREFORE, BE IT HEREBY RESOLVED, by the City Council of the City of Soledad that a Contract Change Order for Construction Services with Monterey Peninsula Engineering in the amount of $123,000 plus a 20% Construction Contingency for a total not-to-exceed amount of $147,600, a copy of the Change Order is attached hereto as **"Exhibit A"**, and by this reference incorporated herein, is hereby approved and the City Manager is hereby authorized and directed to execute the same on behalf of the City.

PASSED AND ADOPTED by the City Council of the City of Soledad at a regular meeting duly held on the 6th day of November 2024 by the following vote:

AYES, and in favor thereof, Councilmembers:

NOES, Councilmembers:

ABSENT, Councilmembers:

ABSTAIN, Councilmembers:

_____

ANNA M. VELAZQUEZ, Mayor

ATTEST:

MEGAN HUNTER, City Clerk

Exhibit A

City of Soledad

10/17/2024

CONTRACT CHANGE ORDER

CCO Number	CIP Number	Change Order Requested by:		Project Name
1	T23-01	[x] Engineer	[ ] Contractor	Front St Improvements Project

CONTRACTOR: Monterey Peninsula Engineering (MPE)

You are directed to do the following described work not included in the plans and specification for this contract. **NOTE: this change order is not effective until all approval signatures are received.**

Change Required:

This change order incorporates all labor, equipment, and materials for the addition of installing two 4-inch conduits per location. The crossing locations are provided below:

1) STA 38+65 - Park and Ride
2) STA 45+75 - Vacant Lot between Soledad St and Kidder St
3) STA 50+21 - Vacant Lot between Kidder St and East St

Prior to starting work, existing utilities will be potholed. Trenches and conduits will be installed in accordance with UG-1: General Greenbook PG&E Document 038139 Rev #16 dated 06/30/2023. At each crossing location, two 4-inch schedule 40 PVC conduits will be installed with a minimum separation of 12-inches and a minimum cover of 36-inches from top of pipe to finish surface. Sand bedding will be utilized in the pipe zone and a 2-sack slurry, colored red, will be utilized to backfill to the bottom of pavement elevation. The asphalt roadway surface will be restored following completion of the work. The conduits will be mandrelled and locatable mule tape installed. The conduits will be capped and stubbed within 1-ft of back of curb. A PG&E representative will need to observe the conduit installation, backfill, and mandrel testing with PG&E coordination being assisted by on-site inspector Tony Scalise.

Total compensation for CCO_#01 is a lump sum of $123,000.00

Note, it is expected that buried concrete will be encountered from historic highway 101. Due to the uncertain nature, additional time to remove this concrete is not included in this change order and will be tracked on a time and materials (T&M) basis if warranted.

Cost Summary:		**Comments**
Original Contract Amount	**$ 3,729,756.75**	
Current Contract Amount	**$ 3,729,756.75**	
Current Change Order	**$ 123,000.00**	
Pending Revised Contract Amount	**$ 3,852,756.75**	

Net Cost of this Change Order: **$ 123,000.00** [X] increase [ ] decrease

Net Time for this Change Order: **0** [ ] increase [ ] decrease

CHANGE IN CONTRACT PRICE		CHANGE IN CONTRACT TIME (Calendar Days)	
Original Contact Price:	**$ 3,729,756.75**	Original Contact Time:	**120**
Net Change from Previous Change Orders:	**$ -**	Net Change from Previous Change Orders:	**0**
Net Change from this Change Order:	**$ 123,000.00**	Net Change from this Change Order:	**12**
New Contract Price:	**$ 3,852,756.75**	New Contract Time:	**132**

Construction Manager Approval (Wallace Group)		
SIGNATURE:	(PRINT NAME & TITLE) **Zachary Teske, Project Manager**	DATE 10/22/24
City Manager's Approval		
SIGNATURE:	(PRINT NAME & TITLE) **Megan Hunter** **City Manager**	DATE

We the undersigned contractor, have given careful consideration to the change proposed and agree, if this proposal is approved, that we will provide all equipment, furnish the materials, except as may otherwise be noted above, and perform all services necessary for the work above specified, and will accept as full payment therefore the price shown above.

CONTRACTOR'S ACCEPTANCE (Monterey Peninsula Engineering)		
SIGNATURE:	(PRINT NAME & TITLE) **Peter Bruno** **Project Manager**	DATE

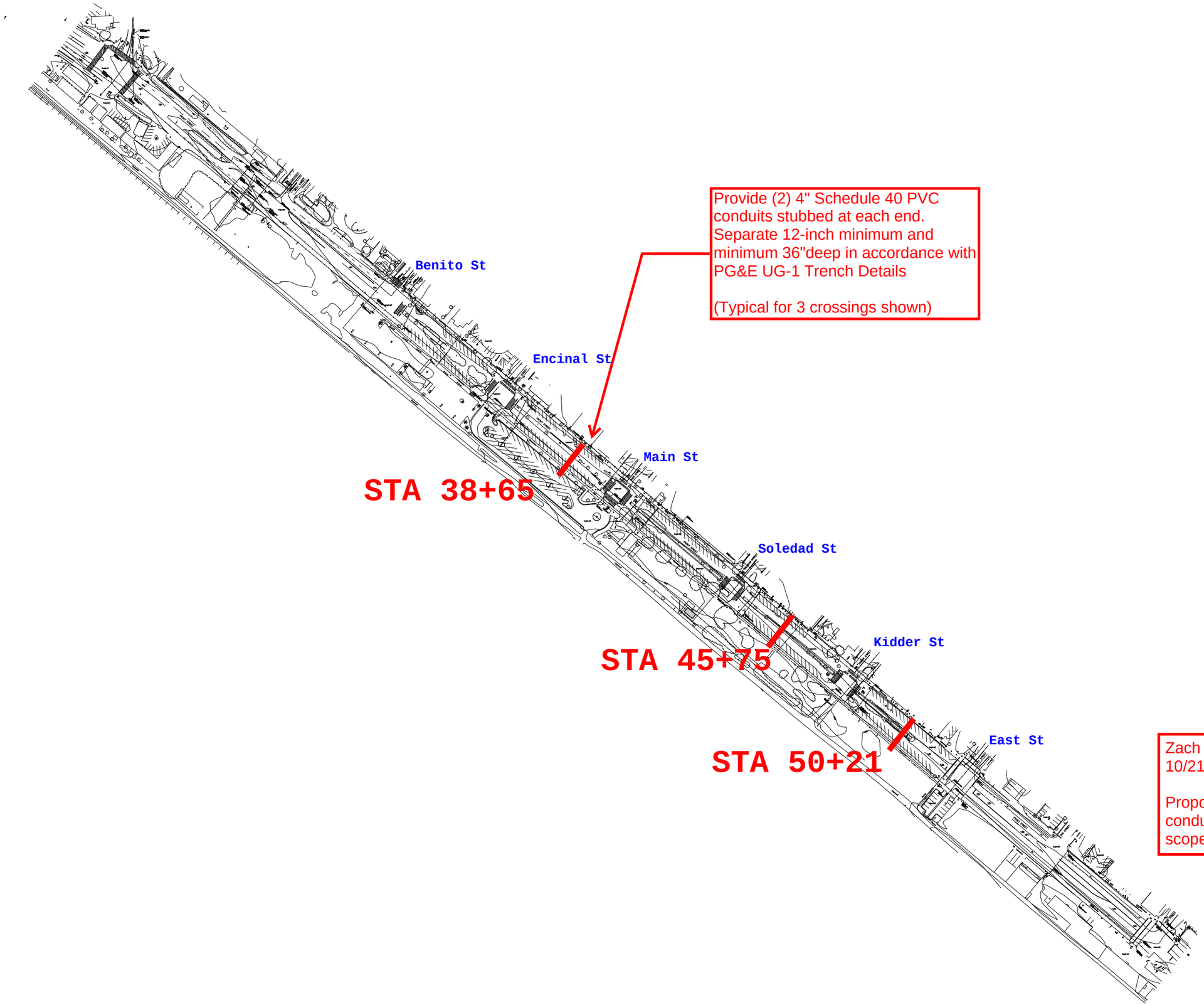

Provide (2) 4" Schedule 40 PVC conduits stubbed at each end. Separate 12-inch minimum and minimum 36"deep in accordance with PG&E UG-1 Trench Details

(Typical for 3 crossings shown)

Zach Teske
10/21/24

Proposed underground conduits for future buildout scope.

G:\Projects\2023jobs\23-074.00 Soledad Container Village\Clients\Arch\02 04 17 23\UTILITIES\XR-UTILITIES.dwg, 7/18/2024 3:37:46 PM, DWG To PDF.pc3

MONTEREY PENINSULA ENGINEERING
CONTRACTORS & ENGINEERS
P.O. BOX 2317
MONTEREY, CA 93942
(831) 384-4081

October, 4th 2024

Zachary Teske
Wallace Group
Director of Construction Management
612 Clarion Court
San Luis Obispo, CA 93401
805–226-9132
Zacharyt@Wallacegroup.us

Re: 4" conduit Crossings

M.P.E. proposes to provide all labor, equipment, and materials as required to install approximately 510LF of 4" Sched. 40 conduit as directed in the email sent by Tony Scalise on 9/3/24 Re: Front Street – 4" Conduit Pricing/ Tree Well Conduit

Work to be Performed (Extra Work):

- ***Saw cutting***
- ***Potholing (estimated 5 pothole locations per crossing)***
- ***Install approximately 510LF of ~~empty~~ 4" Conduit*** Sch-40 PVC with locatable mule tape
  - ***2 EA conduits per crossing***
- ***Backfill/patch 3 EA crossings (trench dimensions 30" wide 40" Deep)***
  - ***Slurry backfill / plates for cure***
  - ***~~4" thick cold mix patch~~*** hot mix asphalt resurfacing

Notes:

- *Conduits will be capped within 1 ft of back of curb*
- *If any concrete under existing AC is encountered, all related costs will be recorded and billed on T&M*
- *Includes traffic control for each day*
- *Includes 1 month of CMS board rental*
- *All work to be performed at the direction of The City of Soledad*

Total Change: $123,000.00

It is mutually agreed that for such change the contract price is **increased** by **$123,000.00 (one hundred twenty three thousand dollars, and zero cents)**
(estimated 10 days necessary)

M.P.E. specifically excludes the following items:

- Engineering, permits, and/or fees, other than included in original Contract
- All bonds, as-builts, and/or construction staking, other than included in original Contract
- ~~All construction testing~~ **Mandrel is required**
- SWPPP installation and/or maintenance, other than included in original Contract
- Repairs to any concrete hardscape
- Electrical wire
- Connecting conduits into electrical vaults or pull boxes
- Electrical vaults or pull boxes
- ~~Coordination with PGE~~ **PG&E to observe installation. City to assist with scheduling and coordination**
- Any items not specifically listed above

Please review the above cost proposal and, if acceptable, issue a change order for the work described. In addition, we request a Contract Time Extension of ten (10) **working** day(s) or ~~ten (10)~~ **calendar** **12** day(s). If you have any questions, please feel free to contact me by phone at (831) 277-4191, or by email at peterbmpe@gmail.com

Sincerely,

Peter Bruno

Peter Bruno
Estimator / Project Manager

AGENDA ITEM NO. 3.

CITY OF SOLEDAD
STAFF REPORT

SUBJECT: **Resolution No. 6173, a Resolution of the City Council of the City of Soledad Approving a Contract Change Order for Construction Services with David Construction & Management, Inc. in the Amount of $66,287 Plus a 20% Construction Contingency of $13,260 for a Total Not-To-Exceed Amount of $79,547 for the Soledad Community Center Building Modernization Project And Authorizing the City Manager to Execute Said Contract Change Order on Behalf of the City of Soledad**

TO: **Honorable Mayor Anna Velazquez and the City Council**

FROM: **Alex Ramos, Assistant Engineer**

THROUGH: **Megan Hunter, City Manager**

MEETING DATE: **November 6, 2024**

Recommendation

It is recommended that the City Council of the City of Soledad Consider and Adopt Resolution No. 6173, "A Resolution of the City Council of the City of Soledad Approving a Contract Change Order for Construction Services with David Construction & Management, Inc in the Amount of $66,287 Plus a 20% Construction Contingency of $13,260 for a Total Not-to-Exceed Amount of $79,547 for the Soledad Community Center Building Modernization Project and Authorizing the City Manager to Execute said Contract Change Order and Task Order Amendment on Behalf of the City of Soledad".

Executive Summary

The Soledad Community Center is over thirty years. When the City took over the building in 2021 after it was leased to the YMCA for the majority of that time, Staff discovered that the building was in need of multiple repairs with years of deferred maintenance. Fortunately, the City received significant funding through the American Rescue Plan Act (ARPA) to undertake significant upgrades to the Community Center awarding a contract to David Construction and Management, Inc. However, Staff did not expect to encounter the number of challenges with the project from a cut water pipe, mold, to improper wiring. These discoveries needed to be resolved but resulted in numerous change orders. Change Order No. 5 (CCO #5) should be the last for this contract and will address the electrical work needed to achieve code compliance including installation of in-fixture battery packs, rekeying of the doors, and improvements to the front door including an ADA push button. Staff is therefore recommending that the City Council approve the contract change order for $66,287 plus a 20% construction contingency of $13,260 for a total not-to-exceed amount of $79,547 for the Soledad Community Center Building Modernization Project and allow the one-time use of General Fund operating reserve.

Background

The Soledad Community Center was constructed in 1993, and while there have been various repairs over the years when it was leased to the YMCA, the facility is currently in need of a comprehensive overhaul. Staff first identified the kitchen as a priority as it was not compliant with the County Health Code because the stove hood lacked fire suppression, there was no grease trap, and there were porous floor tiles. The kitchen also needed new stoves, heating racks, and an ice machine.

Additionally, various improvements to the Soledad Community Center have been identified, including the gym and stage lighting upgrades and the replacement of the ADA stage lift that has been inoperable for years. Other components included interior and exterior doors to ensure ADA accessibility to the entire facility, emergency generators as the Soledad Community Center acts as an EOC, a new trash enclosure, and parking lot upgrades.

On October 19, 2022, the City Council approved an Agreement between the City of Soledad and In Studio Architecture for the Design and Construction Management of the Soledad Community Center Building Modernization Project as Task Order #1. Under this Task Order, In-Studio Architecture (ISA) was tasked with the kitchen remodel design. On December 7, 2022, the City Council approved Task Order 1B Under an Agreement Between the City of Soledad and In Studio Architecture for the design and construction management of the Soledad Community Center Building Modernization Project. Under Task Order 1B ISA was to provide a design for the upgrades and repairs identified in the overall facility assessment of the Soledad Community Center.

On December 6, 2023, the City received an award notification that the Community Center received a $50,000 grant from T-Mobile to fund new stage lighting and an ADA lift to be completed by December 31, 2024.

On April 9, 2024, the City Council approved a contract for construction services with David Construction & Management, Inc. for the Soledad Community Center Building Modernization Project (previously known as the Soledad Community Center Remodel Project) for the total amount of $787,169 for the base bid of the project.

On September 4, 2024, the City council approved a contract change order for construction services with David Construction & Management, Inc. for the Soledad Community Center Building Modernization Project for a total no-to-exceed amount of $253,957.

Review & Analysis

As the Community Center Building Modernization Project is nearing completion, the kitchen remodel (base bid) is scheduled to be completed by mid-November. The City Council also approved a bid alternative for the gym lighting and gym winches which is currently in construction and expected to be finished in January.

The most recently completed work for this project include the exterior flatwork, the newly installed doors, and the gym winches. Given the new installation of the doors within the facility, Staff recommends rekeying all facility doors. The Community Center is a highly used facility with multiple events and parties throughout the year and serves as the cooling center for the community. Having a master key for City Staff will improve reaction time and enable Staff to open any portion of the facility without looking for a specific set of keys in an emergency as they do now. The cost of completing this additional item is included as part of this change order.

To fully achieve ADA-compliant accessibility to the facility, part of this change order includes the cost associated with improving the front doors of the building through the installation of ADA push button actuators commonly seen in retail stores and other heavily populated buildings.

Additionally, with the ongoing work in the Gym/Stage area, two issues with the existing lighting infrastructure were brought to Staff's attention. To achieve the Title 24 Lighting Requirements for the building's existing lighting in the Gym/Stage Area, the current infrastructure will not support the required components (PowPak modules) to bring the building into compliance. This will require the contractor to install in-fixture battery packs not part of the original change order for the PowPaks or original scope. Unfortunately, during the construction of the building or repairs over the years, the inverter has been removed or not installed. The second issue is with the emergency lighting and exit signs. The current exit signs need to be upgraded as they are old and do not produce enough light levels required per code. The emergency lights located at the corners of the gym are tied to a switch that, in the event of a power outage, needs to stay on with the exit lights. Therefore, the contractor will need to rewire to provide a constant power source to the 4 fixtures by tapping into those same wires the exit lights are on. This may also require some minor demo, painting, and repairs to make the modifications.

This significant investment in the Community Center addressed roughly half of the improvements identified by ISA in their evaluation of facility needs. The City still needs to repair the HVAC system, replace the generator, construct a compliant trash enclosure, remodel the bathrooms by the kitchen to ADA standards, install EV charging stations, improve the parking lot and add lighting, and upgrade the landscaping and is seeking other funding to complete this work. Although an RFP was issued for a consultant to support the capital campaign for the building, the City did not receive a response. Jessica Potts, the Parks and Recreation Director has been reaching out to potential consultants to support this effort with renewed efforts beginning January 2025.

Staff is recommending that the City Council approve the Contract Change Order for $66,287, plus a 20% construction contingency of $13,260, for a total not-to-exceed amount of $79,547.

A full description of the items in this change order is attached to this Staff Report as "Exhibit A."

Financial Considerations

Staff is continuously reviewing our expenditures for the American Rescue Plan Act (ARPA) funding, and it appears that the funding has been exhausted. If there are any ARPA projects that are underspent or remaining interest, those funds will first be applied to this change order. It is recommended that the Council approve the use of the General Fund Operating Reserve for the balance as this is a one-time expense and we have set aside enough to meet our reserve target.

Original Construction Contract Amount - $749,685.13
Construction Contingency - $37,484.26
New Contingency $13,260

CCO #1 - $36, 073
CCO #2 - $14, 228
CCO #3 - $253,957
CCO #4 - $8,967 (Approved Administratively)
CCO #5 – $66,287
New Const. Contract Amount - $1,179,941.39

Alternatives

- Approve the resolution as presented; or
- Modify the resolution; or
- Do not approve the Resolution. This is not recommended, as the items in the change order must bring the lighting into Title 24 Lighting Requirements and achieve code compliance.

Planning/CEQA

The proposed project is categorically exempt under Class 1 Existing Facilities, having met the qualifying criteria provided under CEQA Guidelines Section 15301. Class 1 consists of the operation, repair, maintenance, permitting, leasing, licensing, or minor alteration of existing public or private structures, facilities, mechanical equipment, or topographical features, involving negligible or no expansion of existing or former use. Section 15301 provides some, but does not limit project scope to, examples of such projects, including interior or exterior alterations involving interior partitions, plumbing, and electrical conveyances. As detailed above, the proposed Project would be categorized under this description.

Public Notice Requirements

None Required

Attachment(s):
Resolution No. 6173
Exhibit A
CC Project Presentation

RESOLUTION NO. 6173

A RESOLUTION OF THE CITY COUNCIL OF THE CITY OF SOLEDAD APPROVING A CONTRACT CHANGE ORDER FOR CONSTRUCTION SERVICES WITH DAVID CONSTRUCTION & MANAGEMENT, INC IN THE AMOUNT OF $66,287 PLUS A 20% CONSTRUCTION CONTINGENCY OF $13,260 FOR A TOTAL NOT-TO-EXCEED AMOUNT OF $79,547 FOR THE SOLEDAD COMMUNITY CENTER BUILDING MODERNIZATION PROJECT AND AUTHORIZING THE CITY MANAGER TO EXECUTE SAID CONTRACT CHANGE ORDER ON BEHALF OF THE CITY OF SOLEDAD

WHEREAS, the Soledad Community Center was constructed in 1993, and while there have been various repairs and replacements over the years, the facility is in need of a comprehensive overhaul; and

WHEREAS, on October 19, 2022, the City Council approved an Agreement between the City of Soledad and In Studio Architecture for the design and construction management of the Soledad Community Center Remodel Project focused on the kitchen remodel; and

WHEREAS, on December 7, 2022, the City Council approved Task Order 1B under an agreement between the City of Soledad and In Studio Architecture to broaden the scope of the design work to include the entire Soledad Community Center and not just the kitchen; and

WHEREAS, on April 9, 2024, the City Council approved a contract for construction services with David Construction & Management, Inc. for the Soledad Community Center Remodel Project; and

WHEREAS, the base bid of the Soledad Community Center Building Modernization Project is expected to be completed by mid-November and the additional alternative work for the gym lighting and winches is expected to be completed by January; and

WHEREAS, given the new installation of the doors within the facility, Staff is recommending that the facility be rekeyed to provide the Soledad Community Center Staff a master key to avoid any confusion with identifying keys in the event of emergencies; and

WHEREAS, to fully achieve an ADA-accessible facility, the Staff is recommending improvements to the heavy front doors including the installation of an ADA push button actuators; and

WHEREAS, with the ongoing work in the Gym/Stage area, it was discovered that the lighting was not configured as shown in the as built plans with a missing inverter and emergency lighting connected to a switch, and to fix these deficiencies and achieve the Title 24 Lighting Requirements, additional electrical work and the installation of in-fixture battery packs is required;

WHEREAS, Staff recommends approval of Contract Change Order for David Construction & Management, Inc. in the amount of $66,287 plus a 20% construction contingency of $13,260 for a total not-to-exceed amount of $79,547 to rekey the doors, improve the front door with an ADA push button, and address the electrical issues to bring the gym lighting up to code compliance and adding a dimmable feature; and

WHEREAS, this project is Categorically Exempt under Class 1 Existing Facilities, having met the qualifying criteria provided under CEQA Guidelines Section 15301; and

WHEREAS, the Contract Change Order for the Soledad Community Center Building Modernization Project shall be funded through and remaining ARPA funding and General Fund Operating Reserves.

NOW THEREFORE, BE IT HEREBY RESOLVED, by the Council of the City of Soledad that a Contract Change Order for Construction Services with David Construction & Management, Inc. in the amount of $66,287 plus a 20% Construction Contingency of $13,260 for a total not to exceed amount of $79,547, a copy of the Change Order is attached hereto as **"Exhibit A"** and by this reference incorporated herein, is hereby approved and the City Manager is hereby authorized and directed to execute the same on behalf of the City; and

BE IT FURTHER RESOLVED, by the Council of the City of Soledad approve the use of General Fund Operating Reserves for this one time expense.

PASSED AND ADOPTED by the City Council of the City of Soledad at a regular meeting duly held on the 6th day of November 2024 by the following vote:

AYES, and in favor thereof, Councilmembers:
NOES, Councilmembers:
ABSENT, Councilmembers:
ABSTAIN, Councilmembers:

ANNA M. VELAZQUEZ, Mayor

ATTEST:

MEGAN HUNTER, City Clerk

October 24, 2024

CONTRACT CHANGE ORDER NO. 5

TO AN AGREEMENT BETWEEN THE CITY OF SOLEDAD AND DAVID CONSTRUCTION & MANAGEMENT FOR THE COMMUNITY CENTER MODERNIZATION PROJECT

WHEREAS, the City of Soledad, a municipal corporation of the State of California entered into an agreement dated April 9, 2024, with David Construction & Management for a total price of $749,685.13 for the Community Center Modernization Project.

1. REASON FOR CHANGE.

This Contract Change Order No. 5 encompasses the changes listed in the description below:

a. Rekeying specified doors within the Soledad Community Center to a new master key schedule. Keying will be to 5 tiers, resulting in a total of 20 keys.

b. To enable full ADA-compliant accessibility to the facility, ADA push buttons-4.75" push plates are to be installed on walls (one on the exterior and one on the interior). Additionally, ADA Door operators will install electrical flex conduit to be carried from the existing electrical panel within the building reception office area and up through the ceiling.

c. In-Fixture Battery Packs will need to be installed in lieu of the remote inverter option as the current electrical infrastructure does not match what the as-builts have and the facility is missing the inverter. Therefore, additional costs will be required to make the switch, upgrade the exit signs to meet the lighting level per code and switch the 4 emergency light fixtures to the hotwire circuit as the exit lights remain on in the event of an outage.

Please refer to the attached document for a full description of changes in the scope of work.

2. DESCRIPTION OF CHANGE.

a. Rekeying Doors

b. Provide/Install ADA Actuators

c. Gym Lighting Scope Modification / Adds

CCO No. 5 Total $66,287

3. **CONTRACT COST SUMMARY.**

Original Contract Amount	**$749,685.13**
Contingency	$50,744.26
CCO1	$36,073.00
CCO2	$14,228.00
CCO3	$253,957.00
CCO4	$8,967.00
CCO5	$66,287.00
New Total Amount	**$1,179,941.39**

APPROVED:

_____ _____

Megan Hunter Date
City Manager
City of Soledad

ACCEPTED:

We, the undersigned contractor, have given careful consideration to the change proposed and hereby agree, if this proposal is approved, that we will provide all equipment, furnish all materials, except as may otherwise be noted above, and perform all services necessary for the work above specified, and will accept as full payment therefore the prices shown above.

DAVID CONSTRUCTION & MANAGEMENT

_____ _____

By: Date

END OF CONTRACT CHANGE ORDER NO.5

DAVID CONSTRUCTION

DAVID CONSTRUCTION & MANAGEMENT INC
747 WOODBRIDGE STREET, SUITE 110
SAN LUIS OBISPO, CA 93401
(805) 206-8224

24026 CHANGE ESTIMATE LOG

SOLEDAD COMMUNITY CENTER BUILDING MODERNIZATION

JOB NUMBER: 24026
CONTRACT NO: F23-08
PROJECT TITLE: SOLEDAD COMMUNITY CENTER BUILDING MODERNIZATION
PROJECT LOCATION: 560 WALKER DRIVE, SOLEDAD, CA 93960
PW ENGINEERING TECH: LUIS VARGAS / IN STUDIO ARCHITECTURE (ISA) - (831) 262-1664
PW INSPECTOR: ALEX RAMOS / CITY OF SOLEDAD - (831) 665-3859
PROJECT MANAGER: DAVID PICKERING | (805) 206-8224
SUPERINTENDENT: TRAVIS ERICKSON | (805) 635-1127

LAST UPDATED ON: 10/4/2024
CONTRACT AWARD: $749,685.13

Approved
Not Accepted
Need Approval (Submitted)

CE #	REV #	PCO #	CHANGE SOURCE	DESCRIPTION OF CHANGE	DATE CE INITIATED	SUBMITTED DATE	SUBMITTED AMOUNT	SUBMITTED CA DAYS	RESUB DATE	RESUB DATE	APPROVED Date	APPROVED Amount	APPROVED Days	PRIME C.O.	STATUS	COST CODE	NOTES
Alt. 01	1			Gym Lighting and Winches (Re-Qualified 08/21/24)	08/21/24	08/21/24	$ 140,300.00	60.0	N/A	N/A	9/4/2024	$ 140,300.00		003			
1	0		RFI 06	Hood Substitution Modification - 12" Canopy	07/24/24	07/24/24	$ 7,085.00	30	N/A	N/A	8/5/2024	$ 7,085.00	30	001	EXECUTED		
2A	0		RFI 07/15	Exterior Flatwork Elevation Issue - Deduct Only	07/17/24	08/27/24	$ (21,915.00)	0.0	N/A	N/A	8/27/2024	$ (21,915.00)	0.0	002	EXECUTED		
2B	0		RFI 07/15	Exterior Flatwork Elevation Issue - Pothole & Elevation Issues	07/17/24	08/09/24	$ 39,471.00	10.0	N/A	N/A	9/4/2024	$ 39,471.00					
3	0		RFI 09	GFCI to Cabinets and South Wall Electrical	07/17/24	08/05/24	$ 4,617.00	1.0	N/A	N/A	8/8/2024	$ 4,617.00	1.0	001	EXECUTED		
4	0		RFI 10	Stage Wall and Ceiling Finishes	07/17/24	08/05/24	$ 19,122.00	3.0			9/4/2024	$ 19,122.00					
5	0		RFI 11	Remove Door 119A and Infill Opening (Credit)	07/17/24	08/05/24	$ (4,660.00)	0.0	N/A	N/A	8/8/2024	$ (4,660.00)	0.0	001	EXECUTED		
6	0		RFI 12	Grease Interceptor Conflict	07/19/24	08/09/24	$ 6,851.00	3.0	N/A	N/A	9/4/2024	$ 6,851.00					
7	0		INCIDENT	Kitchen Waterline Repair	07/22/24	08/09/24	$ 9,053.00	3.0	N/A	N/A	9/4/2024	$ 9,053.00					
8	0		RFI 14	Mold Remediation / Drywall and FRP	07/24/24	08/05/24	$ 16,814.00	3.0	N/A	N/A	8/8/2024	$ 16,814.00	3.0	001	EXECUTED		
9	0		RFI 16	Rekeying All Community Center Doors	07/30/24	10/03/24	$ 3,379.00	2.0									
10	0		MTG	Refurbish 2 Pairs of Main Entrance Storefront Doors		08/05/24	$ 12,217.00	2.0	N/A	N/A	8/8/2024	$ 12,217.00	2.0	001	EXECUTED		
11A	0		MTG	Substitute Epoxy Flooring and Cove - Quartz Finish	08/12/24	08/12/24	$ 29,235.00	5.0	N/A	N/A	8/12/2024	$ -	0.0	N/A	REJECTED		Cited ADD 3:02 - Addendum
11B	0		MTG	Substitute Epoxy Flooring and Cove - Terra Crete Finish	08/12/24	08/12/24	$ 67,229.00	5.0	N/A	N/A	8/12/2024	$ -	0.0	N/A	REJECTED		Cited ADD 3:02 - Addendum
12A	0		DISCOVERY	Wood Rot - Kitchen Perimeter 4' to Ceiling	08/27/24	08/27/24	$ 36,143.00	7.5	N/A	N/A	8/27/2024	$ 36,143.00	7.5	002	EXECUTED		
12B	0		DISCOVERY	Wood Rot - South Wall Wood Rot	08/27/24	08/27/24	$ 37,988.00	7.5	N/A	N/A	9/4/2024	$ 37,988.00					
13	0		MTG	Add ADA Push Buttons on Single Pair Entrance Doors	08/13/24	10/03/24	$ 31,711.00	3.0									
14	0		MTG	Replace Frame, Door, Hardware, Patch Stucco - #135B	09/20/24	01/00/00	$ -	0.0									
15	0		RFI 17	PowPak Modules for Power Conversion with Pico Switches	08/22/24	10/03/24	$ 5,306.00	2.0									
16	0		MTG	Vent Proximity Code Discrepancy @ Air Handler Location	10/04/24	10/04/24	$ 3,661.00	1.0									
							$347,143.00	145				$ 303,086.00	44				

Base Contract Award	$	749,685.13
Awarded CO's/Alt's:	$	303,086.00
Current Contract:	$	1,052,771.13

DAVID CONSTRUCTION & MANAGEMENT INC
747 WOODBRIDGE STREET, SUITE 110
SAN LUIS OBISPO, CA 93401
(805) 206-8224

UPDATED BY: David Pickering
UPDATED ON: 10/4/2024

Added performance days 2

24026 - CE009_RFI 16 Rekey all Doors to Master Key

DESCRIPTION OF SCOPE: Rekey specified doors at Soledad Community Center to new master key schedule. Keying will be to 5 tiers, resulting in a total of 20 keys.

Clarification:

Existing cylinder cores to be removed, re-keyed, and reinstalled. New keys will be cut. All work will be performed on site.

Pricing is as Follows:

ITEM	DESCRIPTION	QTY	UNIT	SUB/EQUIP UNIT COST	SUB/EQUIP EXTENDED COST	MATERIAL UNIT COST	MATERIAL EXTENDED COST	LABOR UNIT HOUR	LABOR EXTENDED HOURS
	Prime Contractor				$ -				-
	Supervision	0.04	MO	10000.00	$ 400.00		$ -		-
	Project Management	0.02	MO	12000.00	$ 240.00		$ -		-
	Admin	0.04	MO	8000.00	$ 320.00		$ -		-
	Field Overhead		MO	8500.00	$ -		$ -		-
					$ -		$ -		-
					$ -		$ -		-
	Door Keying				$ -		$ -		-
SUBCONTRACTOR (Staley Construction)	Rekey facility doors per attached keying schedule.	1	LS	1823.00	$ 1,823.00		$ -		-

Equipment Total	$ 2,783	Sub Total	$ -	Total Hours	-
		Sales Tax	$ -	Labor Rate	$ 95.00
		Material Total	$ -	Labor Total	$ -

Qualifications:

Quote excludes new doors being provided/installed per current project contract which already includes keying.

Net Change		$	2,783
Overhead @	8.00%	$	223
Profit @	7.00%	$	210
Insurance @	2.00%	$	64
BOND @	3.00%	$	98
TOTAL		**$**	**3,379**

Customer Sign: _____

Accepted Date: _____

Staley Construction Inc
755 Vertin Ave
Suite F
Salinas, CA 93901

PROPOSAL

CHANGE NUMBER: 04

TO

David Construction
747 Woodbridge
Suite #110
San Luis Obispo, CA 93401

CONTACT PHONE	DATE
(831) 757-1250	9/17/24

JOB NAME/LOCATION

Soledad Community Center Modernization
560 Walker Drive

CONTRACT/JOB NUMBER	JOB PHONE
24-32	

We hereby agree to the change(s) or additional work specified below:

Staley Construction is providing a cost to re-key the Soledad Community Building per the attached schedule.

Material includes new cut keys, and the required pin for the cylinder cores.

Labor includes removal of cylinder core, re-keying of core, and re-installation of the core. All work will need to be performed on site.

Pricing as follows:

Material: $ 311

Labor: $ 1,512 (Prevailing wage rates included)

Total for this work: $ 1,823

NOTE: This Change Order becomes part of and in conformance with the existing contract.

We Agree hereby to make the change(s) specified above at this price. **1,823.00**

Date of agreement: _____
Authorized
Signature _____
(CONTRACTOR)

Payments will be made as follows:

Accepted The above prices and specifications of this Change Order are satisfactory and are hereby accepted. All work to be performed under same terms and conditions as specified in original contract unless otherwise stipulated.

Authorized
Signature _____

Date of Acceptance: _____

Printed using A-Systems JobView 24.0 (www.a-systems.net).

SOLEDAD COMMUNITY CENTER BUILDING MODERNIZATION

STALEY CONSTRUCTION KEYING SCHEDULE - 20 KEYS TOTAL

DOOR #	WRITTEN NO	ROOM NO.	ROOM DESCRIPTION	KEY TYPES			MASTER 3 KEYS	OPENING STAFF 8 KEYS	FACILITY OPERATORS			NOTE
				KEY	*FOB*	*NO KEY*			LEVEL 1 3 KEYS	LEVEL 2 3 KEYS	MAINTENANCE 3 KEYS	
101C	1a	101	Entrance - Storefront (Exterior)	X			X	X				
101D	1b	101	Entrance - Storefront (Exterior)	X			X	X				
N/A	2	103	Office 1	X			X			X		
N/A	3	104	Office 2	X			X					
N/A	4	116	Janitor Closet	X			X		X	X	X	
119B	5a	119	Exercise Room	X			X		X	X	X	New / Staley Door - Interior PH(Exit Device) and Hallway side - Locked at all times with Lever/key to unlock.
119C	5b	119	Exercise Room	X			X		X	X	X	
N/A	6	121	Electrical Room	X			X			X	X	
N/A	7	130	Water Heater Room	X			X			X	X	
N/A	8	136	Concession Booth	X			X		X	X	X	
124A	9	124	Kitchen	X			X		X	X	X	New / Staley Door
125A	10	125	Men's Bathroom	X			X		X	X	X	
126A	11	126	Women's Bathroom	X			X		X	X	X	
133A	12	133	Corridor #4 / Side Entry / Storefront	X			X	X				
134A	13	134	Multipurpose Rm - SE / Storefront	X			X	X				
134B	14	134	Multipurpose Rm - NE / Storefront	X			X	X				
134C	15	134	Multipurpose Rm - SW / Storefront (Exterior)	X			X		X	X	X	
134D	16	134	Multipurpose Rm - NW / Storefront (Exterior)	X			X		X	X	X	

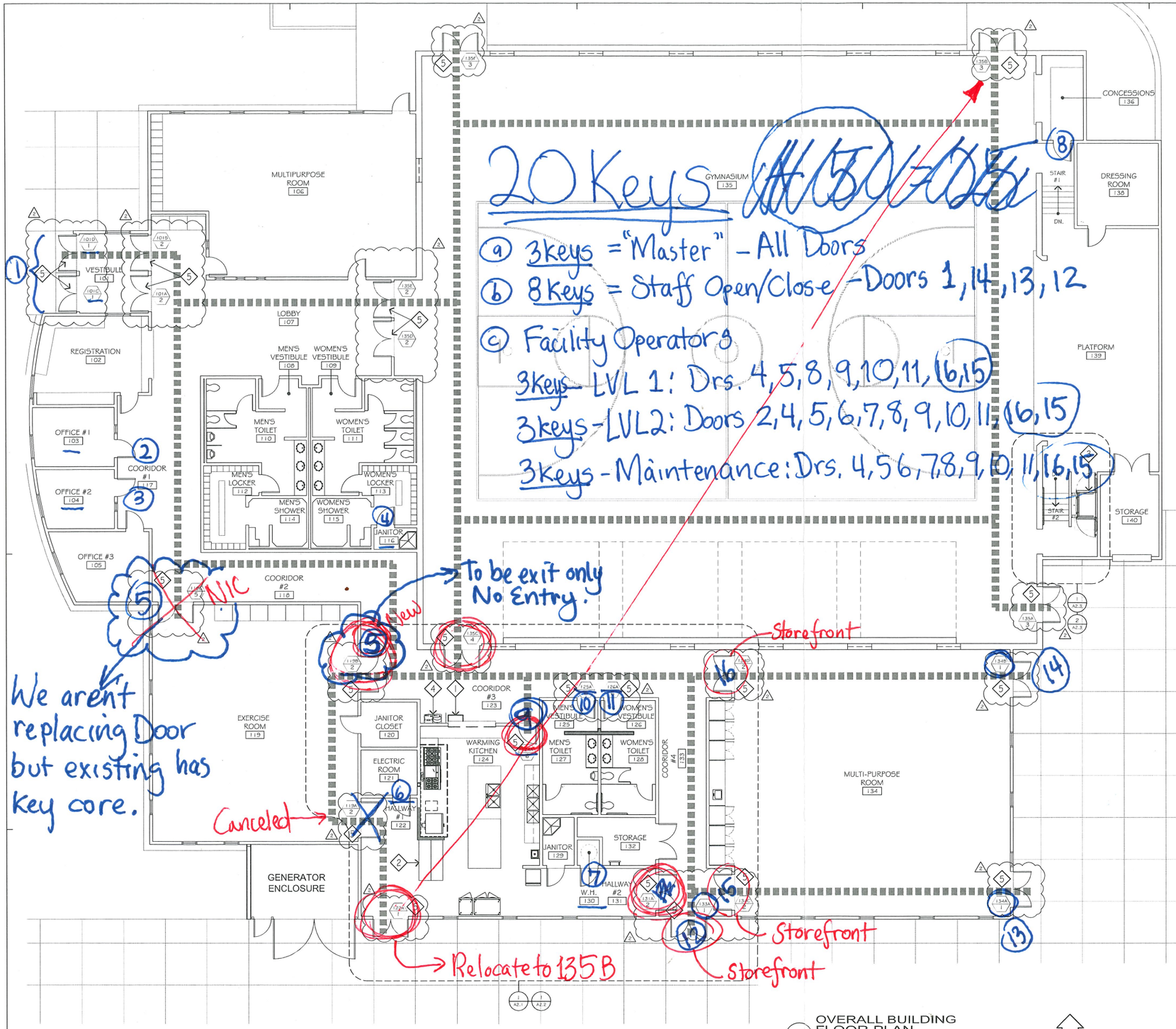

1 OVERALL BUILDING FLOOR PLAN
SCALE : 1/8" = 1'-0"
8 0 8 16 FEET

N

GENERAL NOTES

1. EVERYTHING (E) TO REMAIN, U.O.N.
2. G.C. TO VERIFY ALL DIMENSIONS IN FIELD AND COORDINATE ALL WORK, NOTIFY ARCHITECT OF ANY DISCREPANCIES PRIOR TO COMMENCEMENT OF WORK.
3. WHERE (N) DOORS INDICATED REMOVE (E) DOOR & FRAME
4. SEE SHEET A7.1 FOR DOOR SCHEDULE

KEYED NOTES

1. (N) FOLDING ACCESSIBLE SERVICE COUNTER
2. (N) CHILDREN'S WORKSTATION LOWER COUNTER AND CASEWORK
3. (N) ACCESSIBLE LIFT
4. (N) DOUBLE HEIGHT ACCESSIBLE DRINKING FOUNTAIN AND BOTTLE FILLER
5. (N) SEE SHEET A6.4 FOR DOOR FLOOR CLEARANCE, & A7.1 FOR THRESHOLD DOOR

LEGEND

- 2x - STUD WALLS
- (N) 2 X 6 - STUD WALL @ 16" O.C.
- ACCESSIBLE ROUTE WITHIN BUILDING. MIN. 5' WIDE OR GREATER

IN STUDIO ARCHITECTURE
250 MAIN STREET
SALINAS, CA 93901
831.320.2655

DATES
△1 PLAN CHECK REVISIONS 8-17-2023
△2 PLAN CHECK REVISIONS 10-27-2023

THE INFORMATION ON THIS PLAN IS THE PROPERTY OF IN STUDIO ARCHITECTURE. UNAUTHORIZED USE PROHIBITED

LICENSED ARCHITECT ALEX REYNOSO No. C 29184 Exp. 02/28/25 STATE OF CALIFORNIA

CLIENT
CITY OF SOLEDAD

Reviewed for Code Compliance
04/04/2024
CSG CONSULTANTS, INC.

PROJECT
COMMUNITY CENTER BLDG. MODERNIZATION
560 WALKER DR.
SOLEDAD, CA 93960

SHEET
BUILDING FLOOR PLAN

PROJECT NUMBER:	2251
ISSUED:	10-26-2023
DRAWN BY:	RG/JR
CHECKED BY:	LV/AR
FILENAME:	

A2.0

DAVID CONSTRUCTION

DAVID CONSTRUCTION & MANAGEMENT INC
747 WOODBRIDGE STREET, SUITE 110
SAN LUIS OBISPO, CA 93401
(805) 206-8224

UPDATED BY: David Pickering
UPDATED ON: 10/4/2024

Added performance days 3

24026 - CE013_PROVIDE & INSTALL ADA DOOR AUTOMATION

DESCRIPTION OF SCOPE: To modify single door passage at primary building entrance with automated door door operators via ADA wall-mounted push buttons and ADA door operators (electronic closers). This addition will promote wheelchair accessibility in and out of community center

Clarification:

ADA Push buttons - 4.75" push plates to be installed on walls (with raised box) mounted to walls (one on exterior and one on interior - right of reception check in window) without cutting into wall (not recessed). Per last OAC meeting, city requested trasmitters be hardwired for push buttons. Low voltage wiring to be terminated at button boxes.

ADA Door Operators - Electrical flex conduit to be carried from existing electrical panel within building reception office area and up through ceiling. Two punchouts will be made through wall and into framing of storefront and Hollow Metal frame where 120V wiring will be intercepted at location of new incoming LCN 9530 Senior Swing Door closer per manufacturer requirements. Mounting of ADA door operator (Closer) to be in manner to preserve condition of existing store front and interior doors.

Sourcing power to ADA push buttons and door operators require cutting into walls to feed electrical to operators to new locations. Following install, build back will require patch back and painting touch up of walls.

Pricing is as Follows:

ITEM	DESCRIPTION	QTY	UNIT	SUB/EQUIP UNIT COST	SUB/EQUIP EXTENDED COST	MATERIAL UNIT COST	MATERIAL EXTENDED COST	LABOR UNIT HOUR	LABOR EXTENDED HOURS
	Prime Contractor				$ -				-
	Supervision	0.1	MO	10000.00	$ 1,000.00		$ -		-
	Project Management	0.1	MO	12000.00	$ 1,200.00		$ -		-
	Admin	0.05	MO	8000.00	$ 400.00		$ -		-
	Add ADA Push Buttons and Door Operators				$ -		$ -		-
SUBCONTRACTOR (Watt Electric)	Source Electrical to Push Buttons (2Qty) and Operators (2Qty)	1	LS	4268.00	$ 4,268.00		$ -		-
SUBCONTRACTOR (King City Glass Services, Inc.)	Provide and install new 4.75" push buttons/boxes/transmitters and LCN-9530 Senior Swing Door Closers for two doors.	1	LS	16970.03	$ 16,970.03		$ -		-
DCM (Self-Perform)	Patch and build back walls where opended during electrical installation				$ -		$ -		-
	- Temp facilities	2	LOC		$ -		$ -		-
	+ Mask/cover floor, walls (protection)	1	LS		$ -	150.00	$ 150.00	1.00	1.0
	- Demo	2	LOC		$ -		$ -		-
	+ Demo drywall (allow accessibility for wire)	1	LS		$ -	25.00	$ 25.00	2.00	2.0
	- Drywall								
	+ Drywall Patch-back	2	LOC		$ -	115.00	$ 230.00	4.00	8.0
	+ Plaster / Hand Texture	2	LOC		$ -	50.00	$ 100.00	5.00	10.0
	- Paint				$ -		$ -		-
	+ Rm 102 Touch Up	1	EA		$ -	100.00	$ 100.00	4.00	4.0
	+ Rm 107 Touch up	1	EA		$ -	100.00	$ 100.00	4.00	4.0
					$ -		$ -		-
	- Cleanup	1	EA		$ -		$ -	1.00	1.0
					$ -		$ -		-
					$ -		$ -		-
					$ -		$ -		-
				Equipment Total	$ 23,838	Sub Total	$ 705.00	otal Hours	30
						Sales Tax	$ 56.40	abor Rate	$ 95.00
						Material Total	$ 761.40	abor Total	$ 2,850

Qualifications:

Net Change		$ 27,449
Overhead @	8.00%	$ 2,196
Profit @	7.00%	$ 2,075
Insurance @	2.00%	$ 634
BOND @	3.00%	$ 971
TOTAL		**$ 33,326**

Customer Sign: _____
Accepted Date: _____

DIR #: 1000028373 **CSLB#: 898355**

CHANGE ORDER PROPOSAL

October 1st, 2024

SUBTIER TO PACWEST GENERAL

Attention: David Pickering
Change Order Description: ADA Push Button
Project: Soledad Community Center Reno
COR #: 006
Additional Days to Schedule: 2

David;

Watt Electric, Inc. is pleased to provide our Change Order proposal for the subject project. Our proposal is based on the documents listed below, on file at our office.

Base Price	**$ 4,268.00**

Please note the following inclusions, exclusions, and clarifications as qualifications to this change order proposal.

Documents:

- N/A

Inclusions:

- Provide and install necessary labor, conduit, breakers and wire per the inclusions below.
- Install 2 new breakers, one per door motor.
- Run conduit from existing panel to each door motor and terminate wire. Single point of connection only.
- Install 2 gang box for ADA push button at location to be determined. Run empty conduit or flexible metal conduit with pull string, dependent on location and requirements, from ADA Push Button to door motor.

Exclusions:

- Permits and/or fees (utility, inspection, air quality control, engineering, etc.).
- Removal and or displacement of any Hazardous Materials.
- Cutting, patching or painting except electrical touchup.
- Overtime, shift work, and/or premium time labor.
- Any allowances, and/or contingencies not specifically noted in this proposal.
- Costs incurred due to unforeseen conditions.
- WEI will not be responsible for damage or loss of work due to power interruption during the normal course of this change order work.

DIR #: 1000028373 **CSLB#: 898355**

Clarifications:

- ADA Push Buttons, Door motors and all associated equipment to be furnished and installed by others.
- Any required programming or setup of ADA equipment to be by others.
- Low voltage cabling or connections to be provided and installed by others.
- Quotation is based on a **normal (40) hour work week** and our Standard Terms and Conditions.
- This proposal is valid for 30 days.
- This bid is based upon use of industry standard, code compliant materials and methods.
- This proposal letter shall be incorporated in its entirety into the Subcontract Agreement and is based upon a mutually accepted construction schedule.
- Watt Electric is currently signatory to the IBEW for its work. The IBEW claims work in the following craft as incidental work: Laborers, Operating Engineers, Cement Finishers, and Carpenters. Jurisdictional disputes must be handled through whichever governing body that handles these disputes between union crafts and not between Watt Electric and the General Contractor.

IMPORTANT NOTE: The construction industry is currently experiencing extreme volatility in the electrical basic materials markets. Copper wire, EMT conduit (and all other steel products including fittings, boxes, and supports), and PVC conduit (including fittings and elbows) are currently demonstrating large fluctuations in price, widespread shortages, and delivery lead time issues. Because of this, the pricing in this bid can be guaranteed for no more than 30 days. In addition, because of the extreme shortages of the chemicals used to manufacture PVC conduit and PVC manufacturer supply chain and production disruptions, all our suppliers are seeing severely extended lead times, and in some cases, complete unavailability. Watt Electric, Inc. will make every effort to supply the needed PVC to construct the underground conduit system for this project, but please be aware that PVC conduit may be unavailable at the time of construction commencement due to factors out of WEI's control.

Should you have any questions or if we may be of further assistance, please do not hesitate to contact Terry Adams @ (831) 275-5562 regarding this proposal.

Sincerely,

Terry Adams
Project Manager/Estimator
Watt Electric, Inc.

IG CITY GLASS SERVICES
LIC. # 1043961 C-17 BAR # 291575
304 SOUTH FIRST STREET
KING CITY, CA 93930
PH:(831) 385-3295 FAX:(831) 385-4561

ORIGINAL

Federal Tax ID: 83-0634144

P/O#:

Taken By: HECTOR
Installer:
SalesRep:

Cust State Tax ID:
Cust Fed Tax ID:
Ship Via:

Adv. Code:

Workorder: KC08128
Date: 9/16/2024
Time: 04:10 PM

Bill To: CAS

DAVID CONSTRUCTION
DAVID CONST. & MGT INC.
747 WOODBRIDGE SUITE 110
SAN LUIS OBISPO, CA 93401

(805) 206-8224

Sold To: CAS

LCN 9530 ADA DOOR OPERATOR
MAIN ENTRY/ LOBBY DOORS
560 WALKER DRIVE
SOLEDAD, CA 93960

Qty	Part Number	Description	List	Disc%	Sell	Total
1	CONTRACT	PRICE INCLUDES MATERIAL, TAX, & LABOR	$16,970.03	0	$16,970.03	$16,970.03

Note: *** PRELIMINARY ESTIMATE *** SUPPLY AND INSTALL 2 LCN 9530 SENIOR SWING ADA DOOR OPERATORS 4 WIRELESS PUSH PAD (((WHEELCHAIR ACCESS)) . OPERATORS TO BE INSTALLED ON (LOOKING FROM OUTSIDE) R/H MAIN ENTRY R/H LOBBY DOOR .. DAVID CONST WILL BE SUPPLYING POWER TO LOCATION OF ADA DOOR CLOSER ...

PER:

Sub Total:	$16,970.03
Tax:	$0.00
Total:	$16,970.03
Balance:	**$16,970.03**

Customer's Signature:_____

224 Valle Verde
Hollister, Ca 95023
Phone: 831-902-5373
Lic#987621

Request for Change Order

Date: October 4, 2024

General Contractor: David Construction

Job: Community Center Building

Pages: 1

RFI:

Description:

four (4) Drywall patches

Labor & Materials:
Patching in four (4) locations
Hang, tape, top, skim: texture to match
Masking

Change Order price: $ 5,800.00

PRICE COMPARISON - DCM TO PERFORM WORK AS COST SAVINGS TO CITY

4.75 INCH SQUARE PUSH PLATES

STAINLESS STEEL ACTUATORS

LEARN MORE

click or scan

DESCRIPTION

BEA's **4.75 INCH SQUARE PUSH PLATES** improve overall door access, enhance accessibility for those with limited mobility or disabilities and seamlessly integrate with an automatic door's activation.

These ADA-compliant push plates are available in a variety of popular design options, including alternative accessibility artwork. This product may be hard wired to the door operator or connected to BEA's line of wireless transmitters.

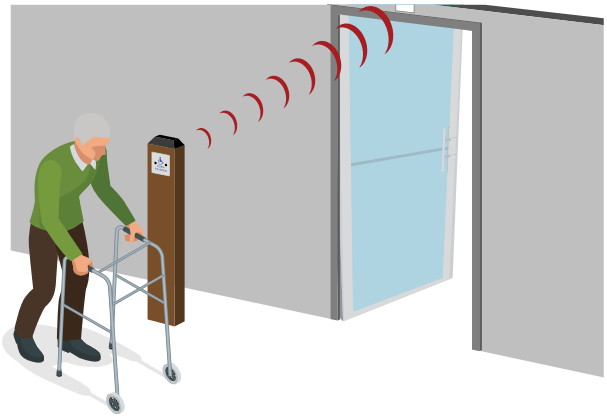

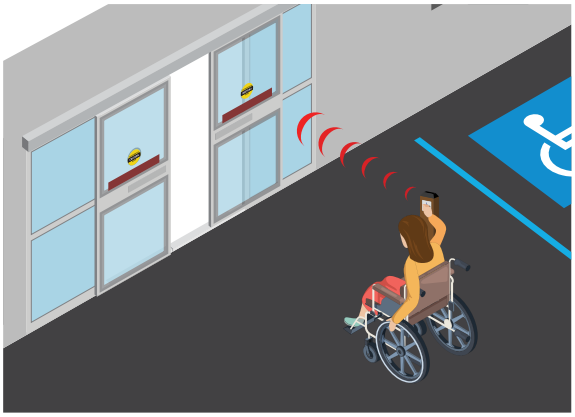

Robust Design

1/16 inch thick stainless steel for maximum durability

Vandal Resistant

Concealed fasteners to minimize vandalism

Available In Complete Kits

Complete kits available including plates, mounting boxes and optional wireless devices for ease of ordering

Enhances Accessibility

ADA-compliant push plates are available in a variety of popular face-plate graphic options

Highly Compatible And Customizable

Compatible with both surface and flush mount boxes; various text, graphic and logo options available

APPLICATIONS

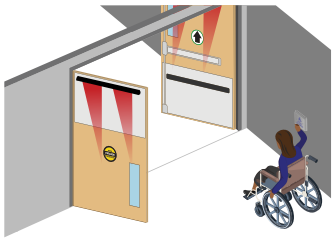

Low Energy Doors

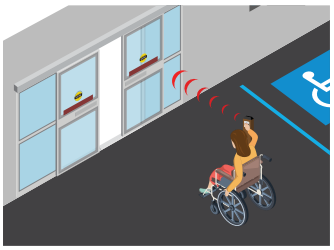

Wireless Compatibility

Request-To-Exit

TECHNICAL SPECIFICATIONS

Faceplate Material	16 gauge, 304 2B Stainless Steel
Backplate Material	⅛" thick, Aluminum
Mounting Screws	Stainless Steel, 6-32 × 1" & 8-32 × 1" Allen Head Size: 5/64
Cherry Switch	Single-pole, 15 A, COM / NO / NC, UL Recognized
Compatible Wireless Frequencies	900, 433, or 300 MHz

PRODUCT SERIES

10PBS
4.75" Square - "Push to Open" text only

10PBS1
4.75" Square - "Push to Open" text & handicap logo

10PBSLL
4.75" Square - Handicap logo only

10PBS10
4.75" Square - Plain face

10PBSE
4.75" Square - "Push to Exit" text only

10PBS1B
4.75" Square - "Push to Open" text & handicap logo - White text on blue plate

10PBS1SB
4.75" Square - "Push to Open" text & handicap logo - Blue text on satin brass plate

10PBS1AL
4.75" Square - "Push to Open" text & alternate handicap logo

20.0044	Screw kit for all 4 ¾" square plates include: (2) #6 and (2) #8 screws (2) flag connectors (1) hex key
10BOX475SQFM	PBS series flush mount box (4 ¾" square)
10BOX475SQSM	PBS series surface mount box (4 ¾" square)
10WRSQ475	PBS series weather ring (4 ¾" square)

DISCLAIMER Information is supplied upon the condition that the persons receiving it will make their own determination as to its suitability for their purposes prior to use. In no event will BEA be responsible for damages of any nature whatsoever resulting from the use of or reliance upon information from this document or the products to which the information refers. BEA has the right without liability to change descriptions and specifications at any time.

BEA AMERICAS / RIDC Park West / 100 Enterprise Drive / Pittsburgh, PA
T 1-800-523-2462 / **F** 1-888-523-2462 / **E** info-us@BEAsensors.com

PUSH PLATE FAMILY

Stainless steel push plates

(US version)

Visit website for available languages of this document.

Images shown below are "Text & Logo" versions.

See table "Push Plate Models" on the following page for all available varieties.

4.5" ROUND

4.5" SQUARE

4.75" SQUARE

6" ROUND

6" SQUARE

JAMB
(with and without microswitch)

SINGLE GANG

VESTIBULE

ACCESSORIES

BOLLARDS

BOXES

TRANSMITTERS & RECEIVERS

900 MHz

TRANSMITTER, RECEIVER, LOGIC

BR2-900

LOGIC MODULE

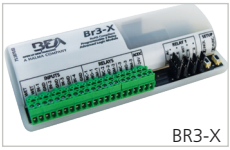

BR3-X

READ BEFORE BEGINNING INSTALLATION/PROGRAMMING/SET-UP

PRECAUTIONS

- ❑ Shut off all power going to header before attempting any wiring procedures.
- ❑ Maintain a clean and safe environment when working in public areas.
- ❑ Constantly be aware of pedestrian traffic around the door area.
- ❑ Always stop pedestrian traffic through the doorway when performing tests that may result in unexpected reactions by the door.
- ❑ *ESD (electrostatic discharge)*: Circuit boards are vulnerable to damage by electrostatic discharge. Before handling any board, ensure you dissipate your body's ESD charge.
- ❑ Always check placement of all wiring before powering up to ensure that moving door parts will not catch any wires and cause damage to equipment.
- ❑ Ensure compliance with all applicable safety standards (i.e. ANSI A156.10) upon completion of installation.
- ❑ DO NOT attempt any internal repair of the components. All repairs and/or component replacements must be performed by BEA, Inc. Unauthorized disassembly or repair:
  1. May jeopardize personal safety and may expose one to the risk of electrical shock.
  2. May adversely affect the safe and reliable performance of the product resulting in a voided warranty.

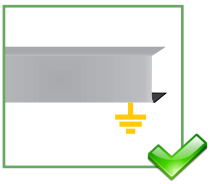

The door control system and the header cover profile must be correctly grounded.

Only trained and qualified personnel are recommended to install and set up the sensor.

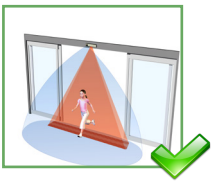

Always test the proper operation of the installation before leaving the premises.

The warranty is invalid if unauthorized repairs are made or attempted by unauthorized personnel.

MOUNTING & WIRING

1. Mark and drill the appropriate holes for mounting.

   10PBJMS (4-stud) plate: jigsaw required for the hole

   10PBS45: face plate must be removed before wiring (using Phillips screwdriver)

2. Wire the push plate to the door controller or radio-controlled transmitter using the NO and COM contacts.

   If installing the Jamb with Microswitch (10PBJM1, 10PBJMS1, 10PBJML, or 10PBJMLL), wire-nut the microswitch to the door controller using the NO and COM contacts.

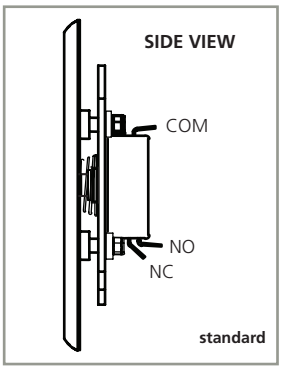

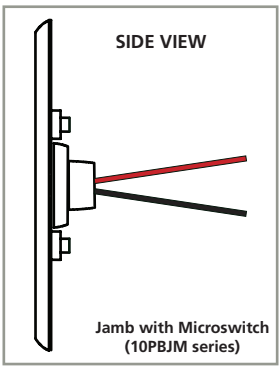

MOUNTING & WIRING (cont.)

NOTE: The following accessories must be installed before securing push plate to the box:

- ***adapter plate*** *(10BRINGC for double-gang boxes and 50.5016 for vestibule plates)*
- ***weather ring*** *(10WRSQ475, 10WRRND45, 10WRRND6)*

3. For all push plates except the 4.5" square, thread each hex-head screw **¾ of the way** into the electrical enclosure. Leave about ½" of the screw unthreaded. See note below for type of screw to use.

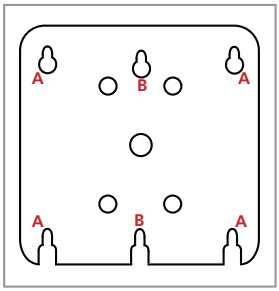

The 6" and 4.75" push plates contain 2 sizes of screws:
larger screws = corners of 4×4 electrical type boxes (A, left)
smaller screws = single/double-gang electrical boxes (B, left)

4.75" square shown here

The 4.5" plate (see image, right) requires #6 Phillips screws for both single- and double-gang installations. Once the back plate is secured, the face plate must be reattached.

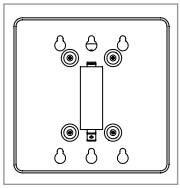

4. Install the push plate onto the box (see image, right), aligning the applicable keyholes with the hex screws. Slide the push plate down, and then secure the push plate to the box by tightening the screws using the provided hex key.
5. Test for proper push-plate activation.

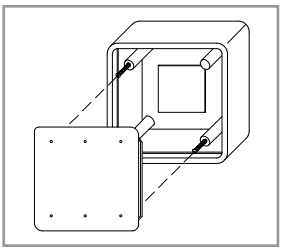

MAINTENANCE

Clean the push plates using only a damp, non-abrasive cloth.

Regular cleaning with harsh solvents or abrasive materials may cause deterioration of the paint or coating.

BEA, INC. INSTALLATION/SERVICE COMPLIANCE EXPECTATIONS

BEA, Inc., the sensor manufacturer, cannot be held responsible for incorrect installations or incorrect adjustments of the sensor/device; therefore, BEA, Inc. does not guarantee any use of the sensor/device outside of its intended purpose.

BEA, Inc. strongly recommends that installation and service technicians be AAADM-certified for pedestrian doors, IDA-certified for doors/gates, and factory-trained for the type of door/gate system.

Installers and service personnel are responsible for executing a risk assessment following each installation/service performed, ensuring that the sensor/device system performance is compliant with local, national, and international regulations, codes, and standards.

Once installation or service work is complete, a safety inspection of the door/gate shall be performed per the door/gate manufacturer's recommendations and/or per AAADM/ANSI/DASMA guidelines (where applicable) for best industry practices. Safety inspections must be performed during each service call – examples of these safety inspections can be found on an AAADM safety information label (e.g. ANSI/DASMA 102, ANSI/DASMA 107, UL294, UL325, and International Building Code).

Verify that all appropriate industry signage, warning labels, and placards are in place.

9530 Series

The 9530 Senior Swing by LCN is an ADA door operator that is a two-in-one swing door operator. Senior Swing operator when activated, opens doors automatically for wheelchair access, yet allows for manual operation for regular pedestrian traffic.

Features

Certifications	Grade 1 - ANSI A156.19, UL325/228, UL1998, ADA, 100 Hour Salt Spray, Meets BAA - Buy American Act
Fluid	All Weather Fluid
Handing	Handed
Door width	▪ Minimum 33"- 48" ▪ Single door - width per leaf 33" minimum to 48" maximum
Warranty	2 years

Fasteners	Machine Screws (MS)
Mounting	Single door, surface mount, offset pivot, butt hinge, pull side
Arms	Standard arm (3077T)
Finishes/colors/ powder coat	▪ 628 Aluminum, Anodized ▪ 710 Dark Brown, Anodized

Special templates Customized installation templates or products may be available to solve non-standard applications. Contact LCN Product Support for assistance.

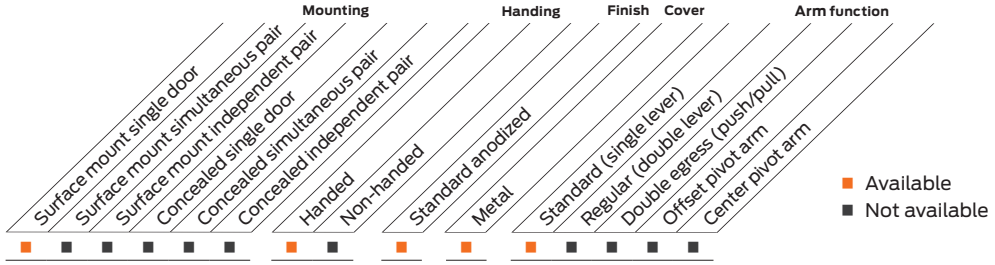

Mounting details

Top jamb single door mounting

Offset pivot/butt hinge, center pivot, pull

Note: Cannot be used with swing clear hinges, pocket pivots or balanced doors.

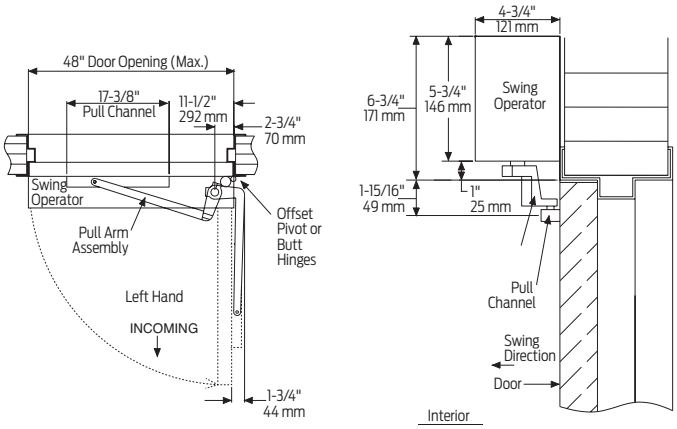

Hollow metal frame

The 18 plate is 1/4" thick and will need to be ordered 3 1/2" longer than the header to allow for mounting the angle brackets to the vertical side jambs. See illustration below.

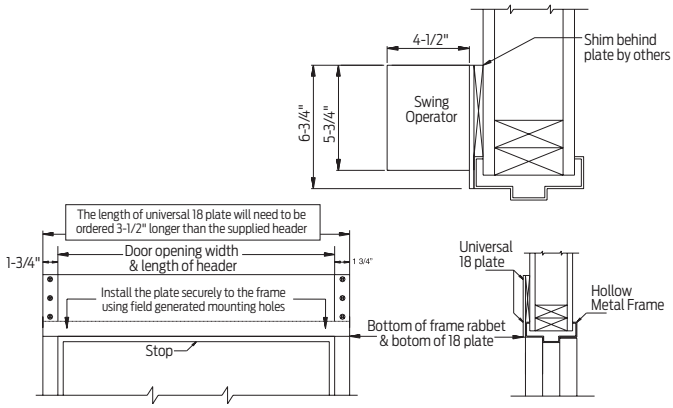

Note: Suggested installation.

Butt hinges	Should not exceed 5" (127 mm) in width
Reveal	Should not exceed 4" (102 mm)
Top rail	Minimum 2 3/4" (70 mm)
Head frame	Minimum 1 3/4" (44 mm); face frame 6 3/4" (171 mm) total operator clearance
Opening and closing time	▪ Variable by adjustments to the electronic control box ▪ Maximum hold open time adjustable up to approximately 32 seconds
System diagram	See page 45 for typical system wiring and page 44 for electrical data
Maximum opening	Template allows 90 degree power opening and 90 degree manual opening

Notes:
- Push 'N Go permits non-switch activation with a power boost providing additional latching force
- Electromechanical unit with microprocessor control
- Digital keypad for easy setup
- 36" header length is standard. Specify 33" - 48" max
- Double Door Header available up to 98", specify other length 49"- 98" max
- Consult factory regarding this option
- Adjustable hold open period of 2 - 32 seconds in automatic or manual mode
- Actuators available separately, see pages 100-117

Accessories

Motor gearbox

9530-3454
Standard Motor Gearbox (MGB)
- Senior Swing
- Handed
- Driving mechanism for operator
- Provides maximum 15 lbs opening force

Control box

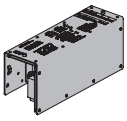

9530-3462
Standard Controller (CTRL)
- Electronic controlling device for Senior Swing

Arm

9530-3077PLCM
Standard Arm Assembly with Track Roller (STDTRKARM2)
- Handed
- Track roller included (includes 3038, 3077T, 3034 and 73)

9530-3077T
Standard Arm (STDTRKARM)
- Handed
- Track roller not included

Track

9530-3038
Track
- Non-handed
- Includes 3034 and 73

9530-73
Track End Cap
- Black plastic end caps

9530-3034
Roller
- Quiet low friction roller assembly

Header

9530-3572HL
Standard Mounting Header (HDR)
- Standard
- Single door, single operator
- Specify length 33" to 48" maximum

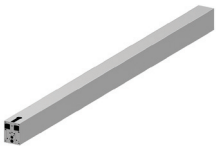

9530-3572DD
Double Door Header (HDR2)
- Standard
- Double door, single operator
- Specify length 49" to 48" maximum

Brackets

9530-275
Mounting Bracket
- Motor gearbox mounting bracket for 2 ¾" offset pivot or butt hinge installations
- Front bracket

9530-3018
Rear Mounting Bracket
- Motor gearbox mounting bracket
- Rear bracket

9530-334-1
Angle Brackets (HLB)
- Mounting bracket for surface applications (includes 2 mounting brackets)

End cap

9530-334
Header End Caps
- With openings for wiring

9530-334-2
Dress plates (HLD)
- Metal finish end cap

Installation accessories

9530-11A
Spindle Plate
- Hides bottom of motor gearbox
- Completes header box
- Cutout allows for motor gearbox shaft
- For 2 ¾" offset pivot or butt hinge installations

9530-12
Filler
- Plate blank
- Completes length of header box (specify length)

9530-18
Mounting Plate
- Optional mounting plate for standard hollow metal door frames
- Specify length 36 ½" to 101 ½" maximum, when angle brackets
- Specify length 33" to 98" maximum when using dress plates

NOTE: The length of a universal 18 plate will need to be ordered 3-1/2″ longer than the supplied header when using angle brackets

Ordering information

How-to-order 9530 Series operators

1. Specify hand

☐ Right hand (RH)
☐ Left hand (LH)

2. Specify header/length

☐ Standard Mounting Header (HDR)
(Specify length 33" to 48")
☐ Double Door Header (HDR2)
(Specify length 49" to 98")

3. Select finish

☐ Standard anodized finish _____
Aluminum, Clear Anodized (628)
or Dark Bronze, Anodized (710)

Operator will be shipped with:

- Standard motor gearbox (1 LH and 1 RH)
- Standard control box (2 ea)
- Header (at specified length, 36" standard)
- Standard Arm (3077T)
- Standard track with track roller
- Machine screws
(unless options listed below are selected)

Operator options

Mounting plate

☐ Plate, ___ (Specify Length 33" to 101 ½")

Table of sizes

Door width

Indicates recommended range of door width for operator.
Note: For all Senior Swing Series. Single Door - Width per leaf 33" minimum, 48" maximum.

9540 Series

The 9540 Senior Swing by LCN is an ADA door operator that is a two-in-one swing door operator. Senior Swing operator when activated, opens doors automatically for wheelchair access, yet allows for manual operation for regular pedestrian traffic.

Features

Certifications	Grade 1 - ANSI A156.19, UL325/228, UL1998, ADA, 100 Hour Salt Spray, Meets BAA - Buy American Act
Fluid	All Weather Fluid
Handing	Handed
Door width	▪ Combined width min 33"- 48" ▪ Single door - width per leaf 33" minimum to 48" maximum
Warranty	2 years

Fasteners	Machine Screws (MS)
Mounting	Single door, surface mount, offset pivot, butt hinge, push side
Arms	Regular Arm (3077)
Finishes/colors/ powder coat	▪ 628 Aluminum, Anodized ▪ 710 Dark Brown, Anodized

Special templates | Customized installation templates or products may be available to solve non-standard applications. Contact LCN Product Support for assistance.

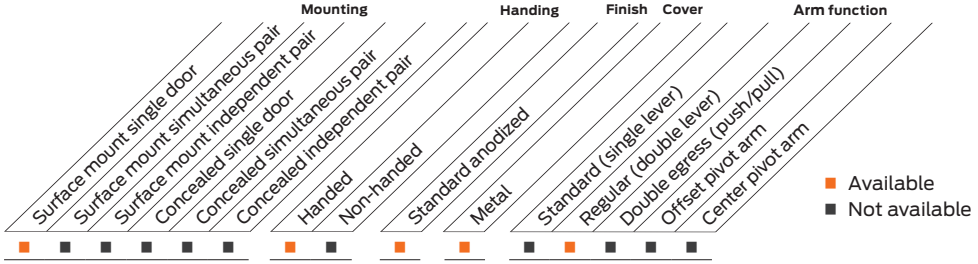

⚠ IMPORTANT ⚠

These instructions are presented in step-by-step sequence. It is very important that installation begins with "1. Pre-Installation Site and Product Check" (page 4) and continues as directed after each section.

⚠ WARNING ⚠

Always disconnect main power to the operator prior to replacing.

Table of Contents

General 2
1 Pre-Installation Site and Product Check (Surface and Concealed) 3
2 Header Installation (Concealed) 4
3 Header Installation (Surface) 5
4 AC Power and Ground Wiring (Surface and Concealed) 7
5 Operator Installation (Surface and Concealed) 8
6 Pivot Block Installation (Concealed, Center Pivoted) 9
7 Breakaway or Fixed Stop Installation (Concealed, Center Pivoted) 10
8 Control Box Installation (Surface and Concealed) 11
9 Control Box Wiring (Surface and Concealed) 12
10 Finger Guard Installation (Concealed, Center Pivoted) 13
11 Door and Arm Installation (Concealed, Center Pivoted) 14
12 Arm Installation (Surface and Concealed) 16
13 Glazing (Surface and Concealed) 16
14 Control Box Functions (Surface and Concealed) 16
15 Plate Installation (Surface and Concealed) 17
16 Release for Service (Surface and Concealed) 17

General

The Senior Swing is an automatic electromechanical swinging door operator for a single door, simultaneously operated, or independently operated pair of doors. The concealed application operates center pivoted, offset pivoted, or butt hung/hinged doors. The surface application operates balanced (push side only), center pivoted, offset pivoted, or butt hung/hinged doors in either push or pull mode.

When activated, the Senior Swing drives the door to the full open position, then electrical power is turned off and the door is closed by spring force. The activating circuit opens the door from any position in the closing swing. During a power failure, the Senior Swing acts as a manual door closer (size 3). Door opening and closing cycles, including opening speed, back check speed, hold open time delay, closing speed, and latch position, are adjustable.

1 Pre-Installation Site and Product Check (Surface and Concealed)

⚠ IMPORTANT ⚠

Do not install the Senior Swing unless all of the following conditions are correct.

1a Check that the product model is correct for the required application.

1b Check that all parts listed on the bill of material are in the shipping container.

1c Check architectural and final approved shop drawings for position of frame and openings.

1d For concealed applications, check that the opening allows 1/4” at each side and at the top so that the frame and the header can be plumbed square and caulked.

1e For surface mount applications onto 2” frames, consult factory to determine if mounting plate is required.

1f Special tool may be required for installation of rivet nuts.

1g Check for sufficient header clearances:

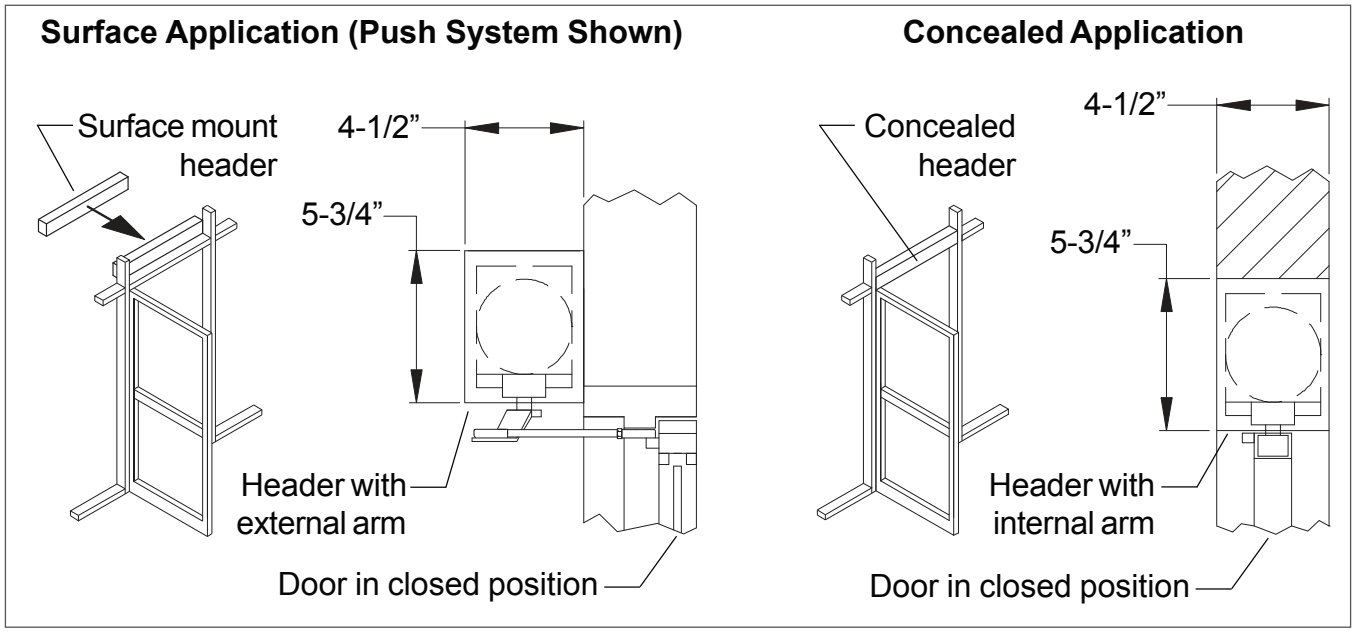

1h For a ramped floor, check that the break in the grade occurs at the edge of the 2” threshold and slopes away from the entrance to allow proper door swing or panic breakaway.

1i Check that a 120 volt, single phase, 60 Hz, fused, 15 amp, 3-wire power supply is available at the side jamb with approximately 12” of wire available to connect to the operator. UL approved type flexible conduit is recommended for the 120 volt power line.
The 120 volt power supply must be a dedicated circuit from the main circuit breaker panel and must not be connected into a building lighting system operating fluorescent lights.

- For concealed applications, continue with “2. Header Installation (Concealed)” on page 5.
- For surface applications, continue with “3. Header Installation (Surface)” on page 6.

2 Header Installation (Concealed)

ⓘ **Note: Install concealed application headers so there is 1/8” between the bottom of the header and the top of the door.**

2a Prepare existing jamb tubes using template 740069, then install four 1/4-20 rivet nuts inside each jamb tube.

2b Align the header with the jamb tubes. For headers with a single operator, position the end of the header containing the operator brackets near the pivot side of the opening (Figure 2-1). Secure the header to the jamb tubes with four 1/4-20 hex head screws at each end (Figure 2-2).

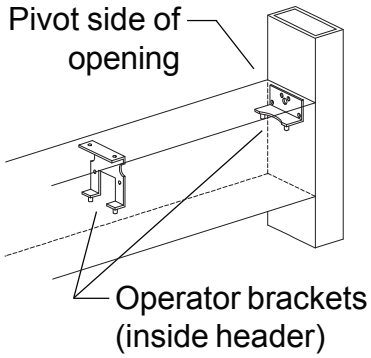

Figure 2-1

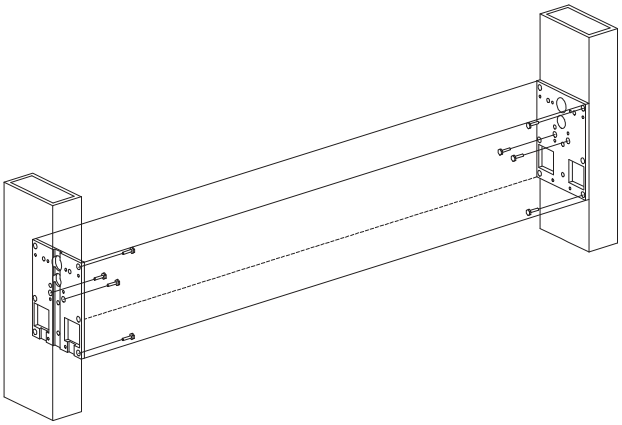

Figure 2-2

2c Stand the header/jamb tube assembly in the opening.

2d Feed the 120 volt power conduit into the header (Figure 2-3). Leave 12” minimum of wire inside the header for final hookup.

2e Shim and square the side jamb tubes in position, then secure the jamb tubes in the opening.

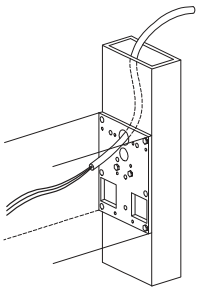

Figure 2-3

- Continue with “4. AC Power and Ground Wiring (Surface and Concealed)” on page 8.

3 Header Installation (Surface)

3a For a header with two operators (for a simultaneously operated pair of doors), designate one end of the header as the companion operator end. (It does not matter which end.)

3b Refer to Figure 3-1 and step 3.3 and prepare wire access holes appropriate for the application in the header using template 740070. Be sure to position edge “A” of template 740070 as shown in Figure 3-1.

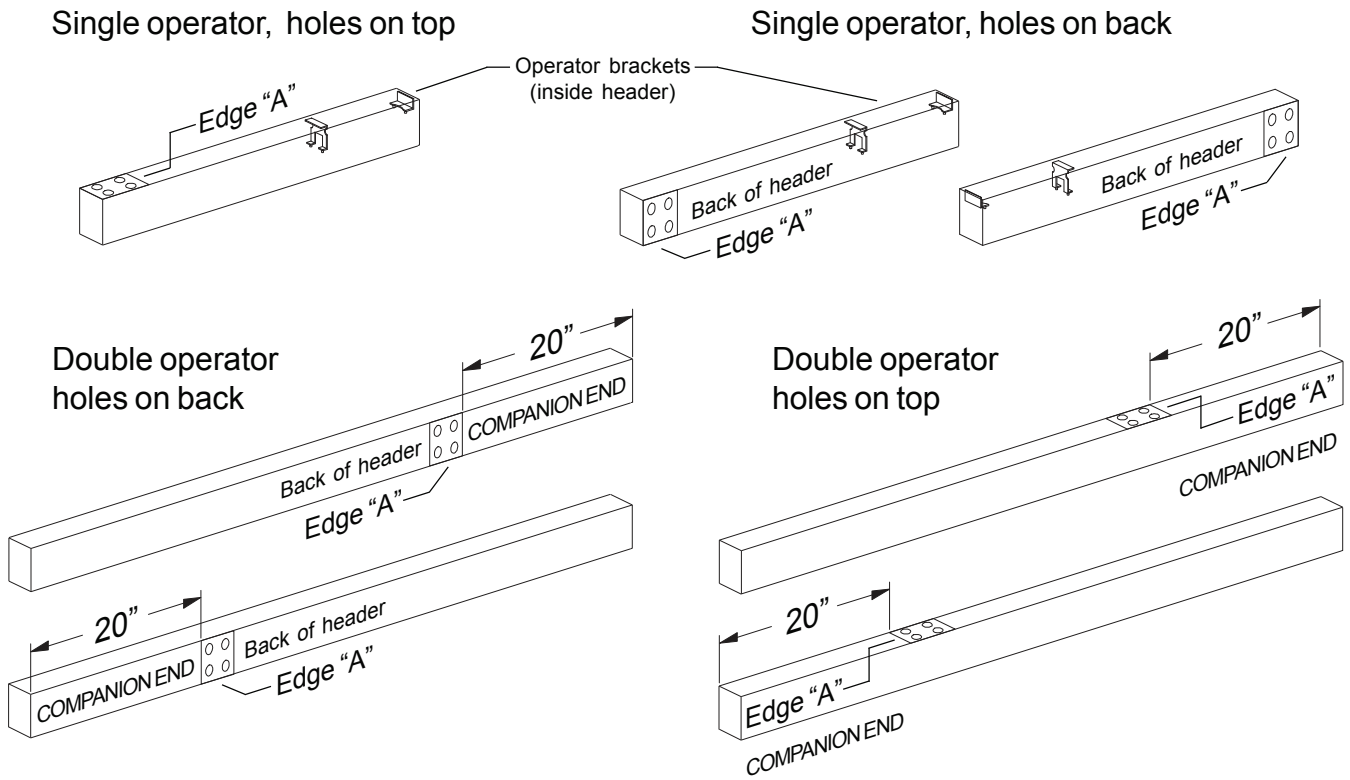

Figure 3-1

3c Install horizontal mounting brackets on the header per the instructions supplied with the brackets (Figure 3-2). Make sure the horizontal mounting brackets are oriented so the wire access holes in the header (see step 3.2) face up or face the door and, for single operator headers, the operator brackets inside the header are near the hinge side of the opening.

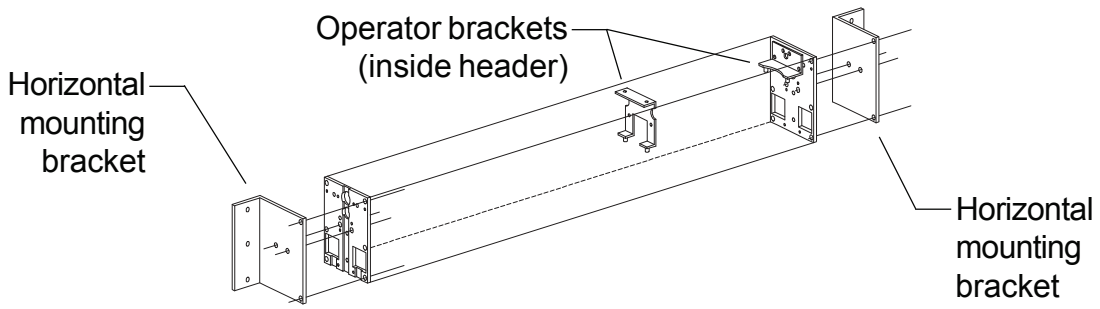

Figure 3-2

ⓘ **NOTE: Install surface applied headers with the following spacing between the bottom of the header and the top of the door:**
Pull arm application: 1-1/8”
Push arm application: 1”

3d For aluminum storefront or aluminum tube frame, install the header with horizontal mounting brackets to the jams per the instructions supplied with the horizontal mounting brackets (Figure 3-3).

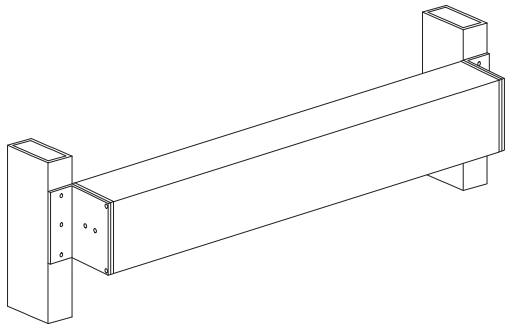

Figure 3-3

3e Hollow metal and wood frames require the use of a -18 mounting plate, sold separately (Figure 3-4).

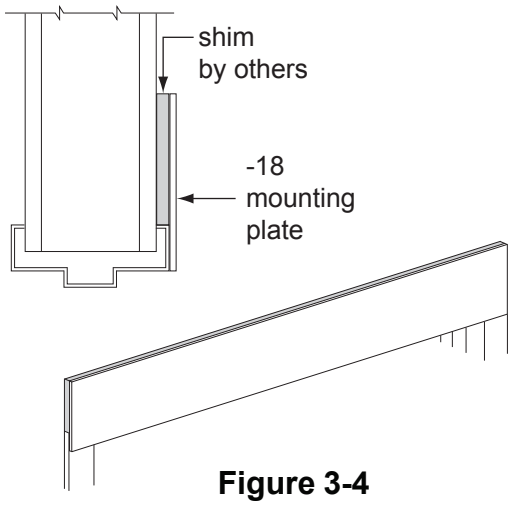

Figure 3-4

3f Feed the 120 volt power conduit into the header (Figure 3-5). Leave 12” minimum of wire inside the header for final hookup.

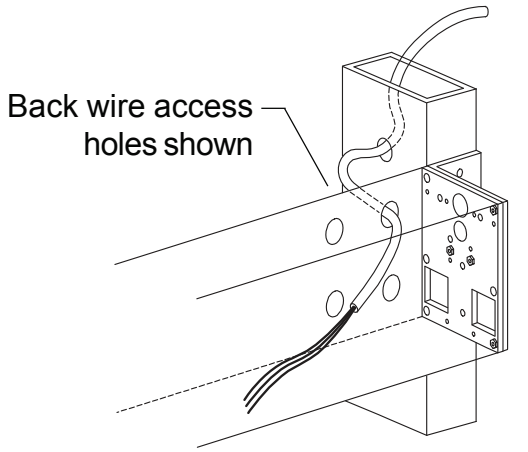

Figure 3-5

- Continue with “4. AC Power and Ground Wiring (Surface and Concealed)” on page 8.

4 AC Power and Ground Wiring (Surface and Concealed)

4a Connect the 120 volt power wires to the AC power cable (part number 761463) and header end plate as shown in Figure 4-1.

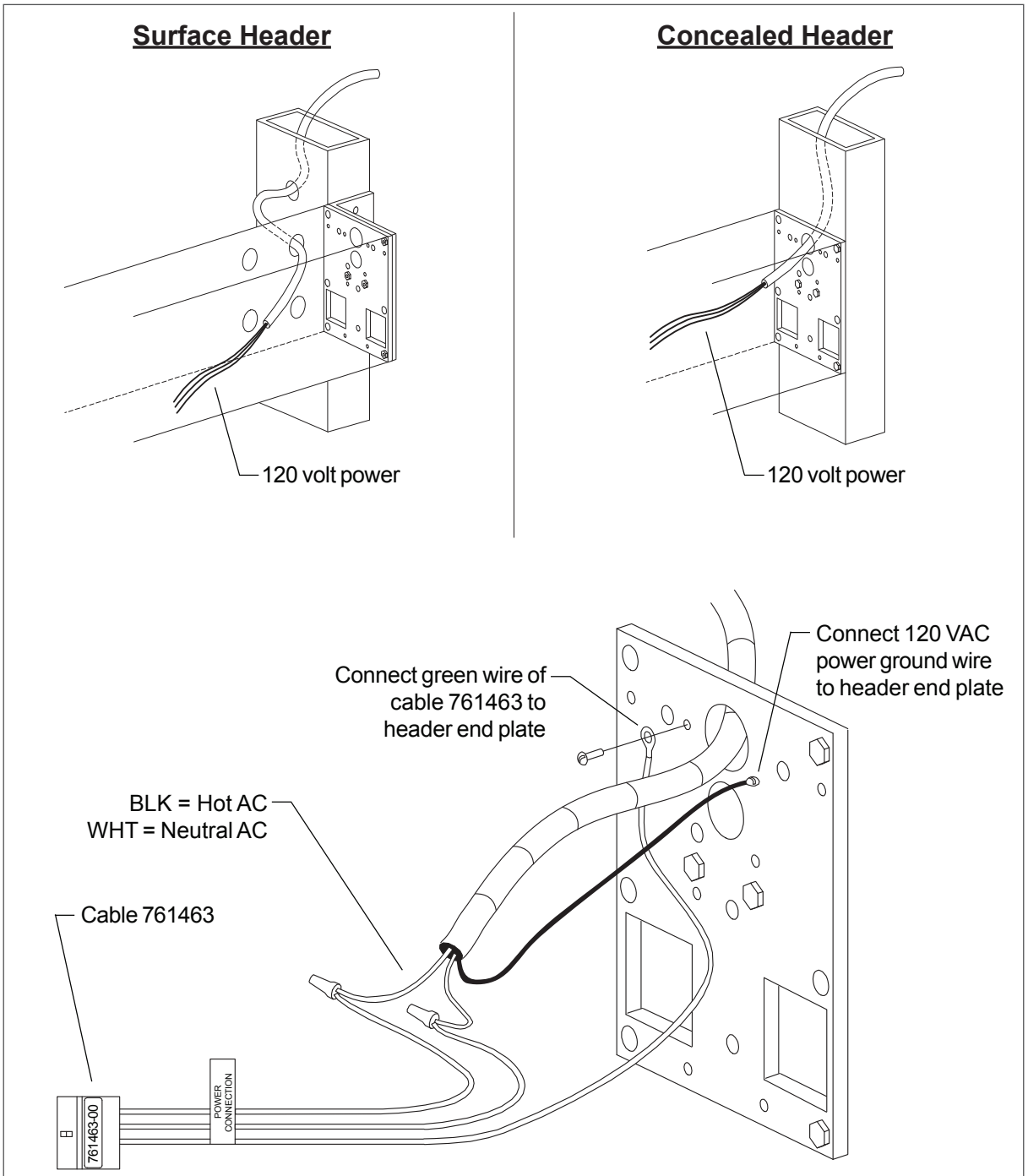

Figure 4-1

- Continue with “5. Operator Installation (Surface and Concealed)” on page 9.

5 Operator Installation (Surface and Concealed)

5a For double operator systems with differently handed operators, make sure that the correct operator is installed in each end of the header. The handing of the operator (R.H. or L.H.) is indicated on a label on the operator.

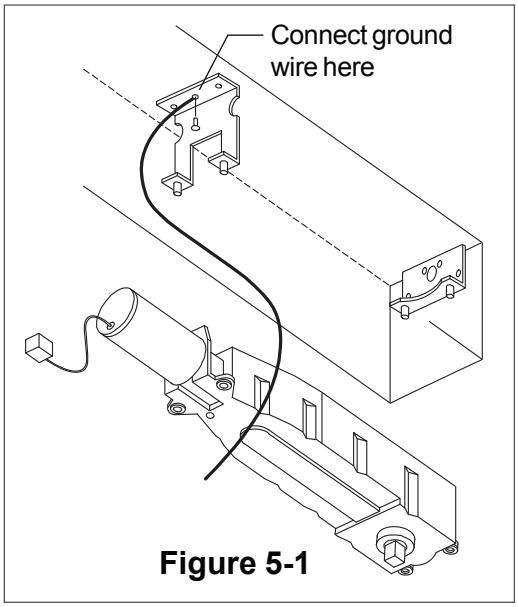

Figure 5-1

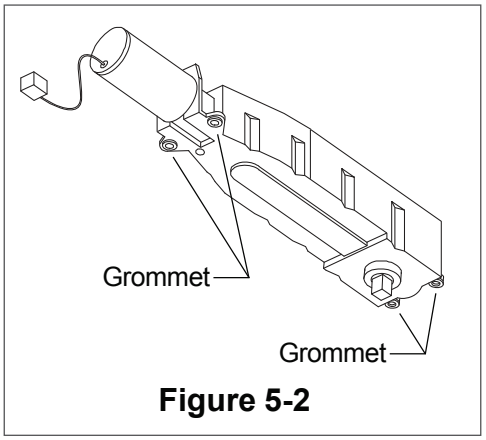

Figure 5-2

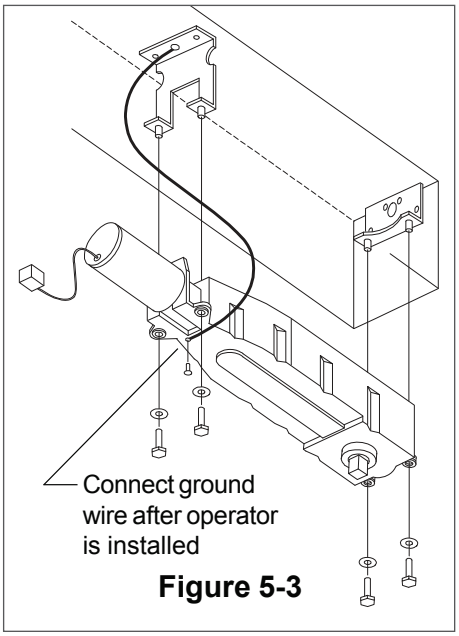

Figure 5-3

5b Connect the end of the green operator ground wire to the rear operator mounting bracket in the header (Figure 5-1) using the #10-32 hex head green ground screw supplied in the operator screw pack.

5c Make sure there is a rubber grommet inside each of the four operator mounting holes (Figure 5-2).

5d Line up the four mounting holes on the operator with the four mounting studs on the operator brackets (Figure 5-3). Make sure that the operator cable (with 6-pin connector) is hanging down freely and push the operator up onto the mounting studs. Make sure cables are not pinched when operator is installed. (The mounting studs fit snugly into the grommets, and firm pressure may be required to get the operator into position.)

5e Secure the operator to the header using four 5/16-18 hex head screws and washers (Figure 5-3). Tighten the screws until they make contact with the mounting studs on the operator brackets.

5f Connect the other end of the green ground wire to the small hole in the bottom of the operator (Figure 5-3).

5g For a header with two operators, install the second operator in the same manner.

- For center pivoted doors, continue with “6. Pivot Block Installation (Concealed, Center Pivoted)” on page 10.
- For other doors, continue with “8. Control Box Installation (Surface and Concealed)” on page 12.

6 Pivot Block Installation (Concealed, Center Pivoted)

ⓘ **NOTE: This section is applicable ONLY if using the factory supplied lower pivot block (with pivot post attached) on center pivoted doors. If not being used, continue with "7. Breakaway or Fixed Stop Installation (Concealed, Center Pivoted)" on page 11.**

6a Position the lower pivot block (Figure 6-1) as shown in Figure 6-2 oriented so the pivot post is 2-3/4" or 3-3/4" (nominal) from the jamb, as necessary.

6b Use the pivot block as a guide and mark and prepare four mounting holes for appropriate fasteners for the mounting surface.

6c Secure the pivot block in place with appropriate fasteners (Figure 6-3).

ⓘ **NOTE: Pivot block shown installed for a door with a 3-3/4" mounting point. For 2-3/4" mounting point, reverse pivot.**

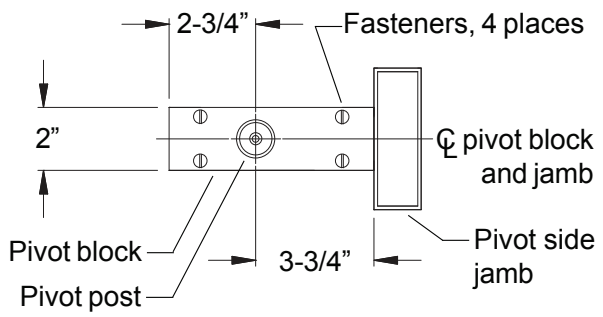

Figure 6-1. Top view of lower pivot block.

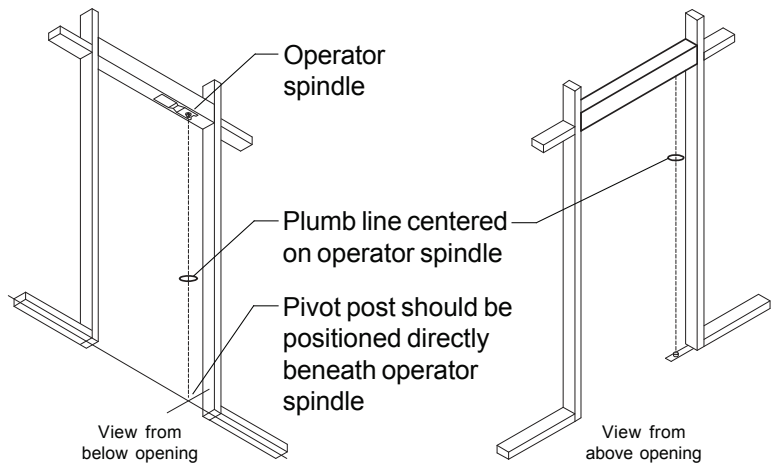

Figure 6-2

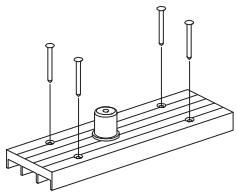

Figure 6-3

- Continue with "7. Breakaway or Fixed Stop Installation (Concealed, Center Pivoted)" on page 11.

7 Breakaway or Fixed Stop Installation (Concealed, Center Pivoted)

ⓘ **NOTE: This section is applicable ONLY to center pivoted doors using the factory supplied breakaway or fixed stop. If not being used, continue with "8. Control Box Installation (Surface and Concealed)" on page 12.**

Breakaway and Fixed Stop Operation

The function of the breakaway or fixed stop is to act as a mechanical stop on an inswinging door so the door cannot normally be opened in the outswinging direction.

The **breakaway stop** differs from the fixed stop in that, in a panic or fire condition, when approximately 50 lbs. of force is applied on the door from the inswinging side, the door will open in the outswinging direction. When this occurs, a switch in the breakaway stop disables the automatic operation of the door. The door then remains inoperative and in the breakaway position until it is manually pushed back through the opening to the inswinging side. This action resets the breakaway stop and restores automatic operation.

7a Orient the breakaway stop according to the directions on the switch label (Figure 7-1). The "OPENING DIRECTION OF DOOR" arrow should point in the direction that the door opens during normal operation.

Figure 7-1

7b Install the breakaway or fixed stop inside the header approximately 2-1/4" from the latch end using the four #8-32 x 3/4" screws supplied with the stop (Figure 7-2). Mounting holes for the stop have been prepared in the header at the factory.

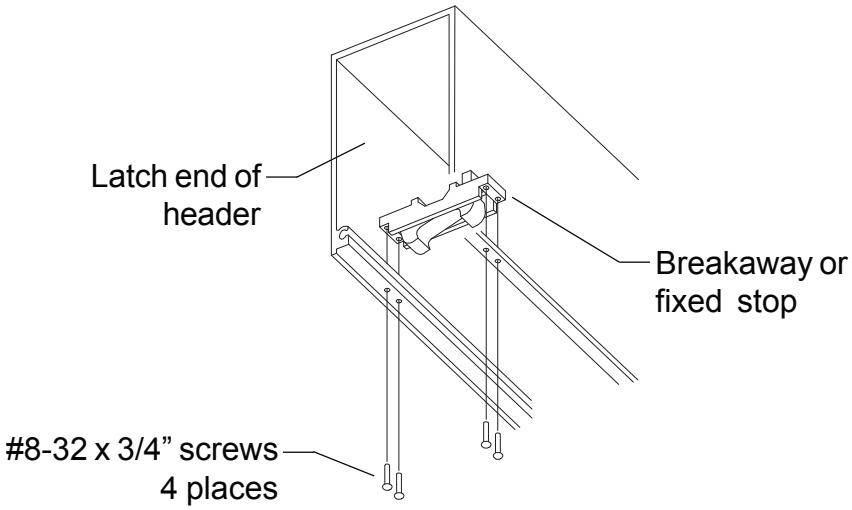

Figure 7-2

- Continue with "8. Control Box Installation (Surface and Concealed)" on page 12.

DAVID CONSTRUCTION & MANAGEMENT INC
747 WOODBRIDGE STREET, SUITE 110
SAN LUIS OBISPO, CA 93401
(805) 206-8224

UPDATED BY: David Pickering
UPDATED ON: 10/31/2024

Added performance days 2~3

24026 - CE017_GYM LIGHTING SCOPE MODIFICATION / ADDS

DESCRIPTION OF SCOPE: Changes applied to electrical drawings via ISA/Aurum Consulting Engineers. Changes were made as a result of onsite coordination by all shareholders on 10/14/2024 to discuss limitations of current scope and code compliance, given sizable deficiencies with existing electrical infrastructure. As a result, DCM was provided revised submittal package 26C response and amended electrical drawing set (E0.1, E5.2, E6.3) on 10/25/2024 for reconsideration of added cost impacts. The following scope changes were applied to modified drawings.

Gym Lighting - Remote inverter option was changed out for the In-Fixture Battery packs

Existing exit signs were substituted out with one that had attached bug eye lights as an option to add lighting at walls and exits where determined to be too dim on account of new revised lighting levels. Emergency circuit requires rewiring to remove switching and provide constant power for 4qty emergency fixtures.

New light fixtures per Submittal 26C R2 response and revised fixture schedule requires tracing wiring to confirm full power dimming circuiting is available.

Pricing is as Follows:

ITEM	DESCRIPTION	QTY	UNIT	SUB/EQUIP UNIT COST	SUB/EQUIP EXTENDED COST	MATERIAL UNIT COST	MATERIAL EXTENDED COST	LABOR UNIT HOUR	LABOR EXTENDED HOURS
	Prime Contractor				$ -				-
	Supervision	0.1	MO	10000.00	$ 1,000.00		$ -		-
	Project Management	0.1	MO	12000.00	$ 1,200.00		$ -		-
	Admin	0.05	MO	8000.00	$ 400.00		$ -		-
	Modified Gym Lighting Infrastructure				$ -		$ -		-
SUBCONTRACTOR (Watt Electric)	Added Costs from change out of light fixtures and added miscellaneous modifications to emergency exit electrical as specified.	1	LS	19500.00	$ 19,500.00		$ -		-
DCM (Self-Perform)	Contingency added finishes from revision to gym lighting scope and rerouting of surface mounted modules.				$ -		$ -		-
	- Temp facilities	1	LOC		$ -		$ -		-
	+ Mask/cover floor, walls (protection during finishes)	1	LS		$ -	150.00	$ 150.00	1.00	1.0
	- Demo	1	LOC		$ -		$ -		-
	+ Demo drywall	1	LS		$ -	0.00	$ -	2.00	2.0

ITEM	DESCRIPTION	QTY	UNIT	SUB/EQUIP UNIT COST	SUB/EQUIP EXTENDED COST	MATERIAL UNIT COST	MATERIAL EXTENDED COST	LABOR UNIT HOUR	LABOR EXTENDED HOURS
	- Drywall								
	+ Drywall Patch-back	1	LOC		$ -	115.00	$ 115.00	5.00	5.0
	+ Plaster / Hand Texture	1	LOC		$ -	50.00	$ 50.00	5.00	5.0
	- Paint				$ -		$ -		-
	+ Touch up around stage wall only	1	EA		$ -	200.00	$ 200.00	4.00	4.0
	- Cleanup	1	EA		$ -		$ -	1.00	1.0
				Equipment Total	$ 22,100	Sub Total	$ 515.00	Total Hours	18
						Sales Tax	$ 41.20	Labor Rate	$ 95.00
						Material Total	$ 556.20	Labor Total	$ 1,710

Qualifications:

Finish Contingency is for touchups around back wall at gym stage only. Price does not include overhead conduit painting in Gym area. Finish scope in gym ceiling would require added rentals (scissor lift which has not been included in above contingency pricing). Electrical paneling/boxes not to be painted.

Net Change		$	24,366
Overhead @	8.00%	$	1,949
Profit @	7.00%	$	1,842
Insurance @	2.00%	$	563
BOND @	3.00%	$	862
TOTAL		**$**	**29,582**

Customer Sign: _____

Accepted Date: _____

DIR #: 1000028373 **CSLB#: 898355**

CHANGE ORDER PROPOSAL

Sept. 30th, 2024

Attention: David Pickering
Change Order Description: Gym Lighting
Project: Soledad Community Center Reno
COR #: 001 - Revised Gym Lighting

David;

Watt Electric, Inc. is pleased to provide our Change Order proposal for the subject project. Our proposal is based on the documents listed below, on file at our office.

Gym Lighting (COR 001)	**$ 19,500.00**

Please note the following inclusions, exclusions, and clarifications as qualifications to this change order proposal.

Documents:

- Revised Electrical Drawings, dated 05/25/23.

Inclusions:

Gym Lights

- Provide and install new fixtures per revised fixture schedule.
- Trace wiring to confirm full power dimming circuiting is available.
- Rewire existing emergency circuit to remove switching and provide constant power for 4 (four) emergency fixtures.

Exclusions:

- Disposal of existing fixtures to be by others.
- Permits and/or fees (utility, inspection, air quality control, engineering, etc.).
- Removal and or displacement of any Hazardous Materials.
- Cutting, patching or painting except electrical touchup.
- Overtime, shift work, and/or premium time labor.
- Any allowances, and/or contingencies not specifically noted in this proposal.
- Costs incurred due to unforeseen conditions.
- WEI will not be responsible for damage or loss of work due to power interruption during the normal course of this change order work.

DIR #: 1000028373 **CSLB#: 898355**

Clarifications:

- Many locations throughout this work require reuse of existing circuits. Every effort will be made to preserve these circuits, but should any sections require replacement or additional work this will be at additional cost.
- Quotation is based on a **normal (40) hour work week** and our Standard Terms and Conditions.
- This proposal is valid for 30 days.
- This bid is based upon use of industry standard, code compliant materials and methods.
- This proposal letter shall be incorporated in its entirety into the Subcontract Agreement and is based upon a mutually accepted construction schedule.
- Watt Electric is currently signatory to the IBEW for its work. The IBEW claims work in the following craft as incidental work: Laborers, Operating Engineers, Cement Finishers, and Carpenters. Jurisdictional disputes must be handled through whichever governing body that handles these disputes between union crafts and not between Watt Electric and the General Contractor.

IMPORTANT NOTE: The construction industry is currently experiencing extreme volatility in the electrical basic materials markets. Copper wire, EMT conduit (and all other steel products including fittings, boxes, and supports), and PVC conduit (including fittings and elbows) are currently demonstrating large fluctuations in price, widespread shortages, and delivery lead time issues. Because of this, the pricing in this bid can be guaranteed for no more than 30 days. In addition, because of the extreme shortages of the chemicals used to manufacture PVC conduit and PVC manufacturer supply chain and production disruptions, all our suppliers are seeing severely extended lead times, and in some cases, complete unavailability. Watt Electric, Inc. will make every effort to supply the needed PVC to construct the underground conduit system for this project, but please be aware that PVC conduit may be unavailable at the time of construction commencement due to factors out of WEI's control.

Should you have any questions or if we may be of further assistance, please do not hesitate to contact Terry Adams @ (831) 275-5562 regarding this proposal.

Sincerely,

Terry Adams
Project Manager/Estimator
Watt Electric, Inc.

GENERAL CONSTRUCTION NOTES

1. CONTRACTOR SHALL COMPLY WITH ALL APPLICABLE CODES AND REGULATIONS. MATERIALS AND EQUIPMENT SHALL BE U.L. LISTED AND LABELED FOR THE APPLICATION.
2. THE CONTRACTOR SHALL OBTAIN AND PAY FOR ALL PERMITS, LICENSES AND INSPECTION FEES REQUIRED BY THIS CONTRACT WORK.
3. CONTRACTOR SHALL VISIT THE PROJECT SITE PRIOR TO BIDDING AND ALLOW FOR ALL FIELD CONDITIONS. THE CONTRACTOR SHALL BE RESPONSIBLE FOR ALL ELECTRICAL WORK NOTED AND CALLED OUT ON ALL CONTRACT DOCUMENTS. THE CONTRACTOR SHALL OBTAIN INFORMATION AND BE FAMILIAR WITH ALL OTHER TRADES WORK. THE CONTRACTOR SHALL BE RESPONSIBLE FOR COORDINATION BETWEEN OTHER TRADES ON PROJECT.
4. CONTRACTOR SHALL BE RESPONSIBLE FOR THE SAFETY OF PERSONS AND PROPERTY AND SHALL PROVIDE INSURANCE COVERAGE AS NECESSARY FOR LIABILITY AND PERSONAL, PROPERTY DAMAGE, TO FULLY PROTECT THE OWNER, ARCHITECT AND ENGINEER FROM ANY AND ALL CLAIMS RESULTING FROM THIS WORK.
5. CONTRACTOR SHALL MAINTAIN RECORD DRAWINGS AT THE PROJECT SITE INDICATING ALL MODIFICATIONS TO ELECTRICAL SYSTEMS. THE CONTRACTOR SHALL AT THE CONCLUSION OF THE PROJECT PROVIDE ACCURATE "AS-BUILT" DRAWINGS ACCEPTABLE TO THE ARCHITECT.
6. ALL MATERIALS PROVIDED TO THE PROJECT SHALL BE NEW. THE CONTRACTOR SHALL BE RESPONSIBLE TO PROVIDE AND INSTALL ALL INCIDENTAL MATERIALS REQUIRED FOR A COMPLETE INSTALLATION.
7. CONTRACTOR SHALL PROVIDE TO THE ARCHITECT A CONSTRUCTION SCHEDULE OF ELECTRICAL WORK. THE CONSTRUCTION SCHEDULE SHALL IDENTIFY ALL SIGNIFICANT MILESTONES WITH COMPLETION DATES.
8. CONTRACTOR SHALL PROVIDE ALL REQUIRED "CUTTING, PATCHING, EXCAVATION, BACKFILL AND REPAIRS" NECESSARY TO RESTORE DAMAGED SURFACES TO EQUAL OR BETTER THAN ORIGINAL CONDITIONS EXISTING AT START OF WORK.
9. CONTRACTOR SHALL BE RESPONSIBLE FOR PAINTING ALL EXPOSED CONDUITS AND ELECTRICAL EQUIPMENT. REFER TO ARCHITECTS PAINTING SECTION FOR REQUIREMENTS.
10. ALL ELECTRICAL EQUIPMENT INSTALLED OUTDOORS SHALL BE WEATHERPROOF. EXTERIOR CONDUITS RUN INTO BUILDINGS SHALL BE INSTALLED WITH FLASHING, CAULKED AND SEALED. CONDUITS FOR EXTERIOR ELECTRICAL DEVICES SHALL BE RUN INSIDE BUILDING UNLESS OTHERWISE NOTED ON DRAWINGS.
11. ALL CONDUITS UNLESS OTHERWISE NOTED ON DRAWINGS SHALL HAVE AS A MINIMUM: TWO (2) #12s WITH ONE (1) #12 GROUND. "TICK" MARKS SHOWN ON CIRCUITRY ARE FOR ROUGH ESTIMATING ONLY. THE CONTRACTOR SHALL BE RESPONSIBLE FOR ALL WIRES AND WIRE SIZES REQUIRED BY LATEST CODE.
12. ALL BRANCH CIRCUITS SHALL HAVE INDIVIDUAL NEUTRALS. SHARED NEUTRALS ON MULTIWIRE CIRCUITS IS NOT ALLOWED.
13. ALL 120/277V LIGHT SWITCHES AND WALL OCCUPANT SENSORS SHALL HAVE A NEUTRAL INSTALLED TO THE DEVICE BOX EXCEPT WHERE A CONDUIT OR SURFACE RACEWAY SYSTEM IS INSTALLED.
14. COORDINATE ALL CONDUIT RUNS, ELECTRICAL EQUIPMENT AND PANELS WITH ALL OTHER WORK TO AVOID CONFLICTS.
15. SEE ARCHITECTURAL DOCUMENTS FOR EXACT PLACEMENT OF LIGHTING FIXTURES AND DEVICES. THE ELECTRICAL CONTRACTOR SHALL BE RESPONSIBLE FOR VERIFICATION OF CEILING TYPES FROM ARCHITECTURAL DOCUMENTS AND PROVIDE AND INSTALL ALL REQUIRED FIXTURE MOUNTING HARDWARE. PROVIDE AND INSTALL U.L. LISTED FIRE STOP ENCLOSURES FOR ALL RECESSED FIXTURES IN FIRE RATED CEILINGS.
16. FROM ALL NEW FLUSH MOUNT PANELS; THE CONTRACTOR SHALL STUB UP INTO ACCESSIBLE CEILING SPACE A MINIMUM OF FOUR (4) 3/4" CONDUITS FOR FUTURE USE.
17. CONTRACTOR SHALL, PRIOR TO BID, FIELD VERIFY ALL REQUIREMENTS FOR MODIFYING THE EXISTING CLOCK, DATA, AND INTERCOM SYSTEMS TO ACCOMMODATE ADDITIONS NOTED. THE CONTRACTOR SHALL PROVIDE ALL MATERIALS NEEDED TO MAKE A FULLY OPERATIONAL SYSTEM AT THE CONCLUSION OF PROJECT WORK.
18. CONTRACTOR SHALL PROVIDE IN EVERY NEW EMPTY CONDUIT A DRAW STRING FOR USE IN FUTURE CONSTRUCTION.
19. ALL CONDUIT SHALL BE CONCEALED WHERE POSSIBLE. CUT AND PATCH EXISTING WALLS WHERE NECESSARY. WHERE IT IS NECESSARY TO CUT OR BORE EXISTING STRUCTURAL WALLS FOR NEW ELECTRICAL WORK OBTAIN PERMISSION FROM THE ARCHITECT PRIOR TO STARTING WORK. REUSE EXISTING CONDUIT WHERE POSSIBLE.
20. WHERE IT IS NOT POSSIBLE TO REUSE EXISTING CONDUIT OR RUN NEW CONCEALED CONDUIT USE NON-METALLIC SURFACE RACEWAY AND BOXES. ROUTING OF ALL NON-METALLIC RACEWAYS SHALL BE APPROVED BY THE ARCHITECT OR OWNER'S REPRESENTATIVE PRIOR TO ROUGH-IN.
21. EXTENSION RINGS OR RESET BOXES TO BE FLUSH WITH NEW WALL THICKNESS.
22. CONTRACTOR SHALL BE RESPONSIBLE FOR ALL DAMAGE TO EXISTING UNDERGROUND SYSTEMS (GAS, WATER, TELEPHONE, ELECTRICAL, SEWER, ETC.). THE CONTRACTOR SHALL REPAIR & PAY ALL EXPENSES FOR DAMAGE TO EXISTING UNDERGROUND SYSTEMS AS A RESULT OF NEW WORK. REPAIR TO DAMAGED UNDERGROUND SYSTEMS SHALL BE TO THE OWNERS SATISFACTION WITHOUT EXTRA EXPENSE TO THE OWNER.
23. EXISTING WIRING SHOWN HAS BEEN TAKEN FROM OLD PLANS AND IS ASSUMED TO BE CORRECT. ELECTRICAL CONTRACTOR SHALL FIELD VERIFY ACTUAL CONDITIONS AND MAKE ADJUSTMENTS TO SUIT ACTUAL CONDITIONS AND TO MEET THE INTENT OF THE CONTRACT DOCUMENTS.
24. WHERE NON-METALLIC SHEATHED CONDUCTORS ARE FOUND, THE CONTRACTOR SHALL REMOVE TO FULLEST EXTENT PER THE GENERAL DEMOLITION NOTES AND REPLACE WITH CONDUIT. METAL CLAD CABLE WILL BE PERMITTED ON A CASE-BY-CASE BASIS ONLY BY WRITTEN APPROVAL FROM THE ARCHITECT.
25. ALL INSTALLATION OF EXPOSED SURFACE MOUNTED RACEWAY IN PUBLIC AREAS SHALL BE REVIEWED BY ARCHITECT BEFORE ROUGH-IN. CONTRACTOR IS TO DETERMINE THE ACCESSIBILITY OF ATTIC, FURRED SPACE, HOLLOW MULLIONS, ETC. IN EACH AREA AND REVIEW WITH ARCHITECT. IF SYSTEM CAN BE ROUTED CONCEALED EITHER BY FISHING OR ACCESSIBILITY, CONTRACTOR IS TO DO SO. IF INACCESSIBILITY IS DETERMINED, CONTRACTOR SHALL INSTALL SURFACE MOUNTED RACEWAY IN THE MOST AESTHETICALLY PLEASING MEANS AS DETERMINED BY THE ARCHITECT. NO ALLOWANCE FOR ADDITIONAL COMPENSATION DUE TO ROUTING AS DIRECTED BY THE ARCHITECT WILL BE MADE.

ELECTRICAL SYMBOLS & ABBREVIATIONS

SYMBOLS & ABBREVIATIONS SHOWN ARE FOR GENERAL USE. DISREGARD THOSE WHICH DO NOT APPEAR ON THE PLANS.

- FLUORESCENT OR LED LUMINAIRE - SEE SCHEDULE
- EMERGENCY OR NIGHT LIGHT
- STRIP FLUORESCENT OR LED LUMINAIRE - SEE SCHEDULE
- LUMINAIRE - RECESSED - SEE SCHEDULE
- RECESSED WALL WASHER
- LUMINAIRE - SURFACE MOUNTED - SEE SCHEDULE
- LUMINAIRE - POLE OR POST MOUNTED - SEE SCHEDULE
- LUMINAIRE - WALL MOUNTED SEE SCHEDULE
- BOLLARD OR PATH LIGHT - SEE SCHEDULE
- EXIT LIGHT - DIRECTIONAL ARROWS AS INDICATED - SEE SCHEDULE
- TRACK LIGHTING - SEE SCHEDULE
- EMERGENCY LIGHT
- DIGITAL DUAL TECHNOLOGY OCC. SENSOR
- LIGHTING CONTROL OCCUPANCY SENSOR CORNER MOUNTED
- DRC — DIMMER ROOM CONTROLLER
- PC — PLUG LOAD CONTROLLER
- RC — ROOM LIGHTING CONTROLLER
- LCP — LIGHTING CONTROL PANEL
- DL — DIGITAL DAYLIGHT SENSOR
- $ — SINGLE POLE SWITCH **
- $a — SINGLE POLE SWITCH, ** a = CIRCUIT CONTROLLED
- $3 — THREE WAY SWITCH**
- $4 — FOUR WAY SWITCH**
- $M — MANUAL MOTOR STARTER
- $K — KEY OPERATED SWITCH**
- LIGHTING DIMMER**
- DIGITAL ON/OFF SWITCH **
- $D — DIGITAL DIMMER SWITCH **
- $M# — DIGITAL MULTI SCENE LIGHTING SWITCH **
- $S — DIGITAL DUAL TECHNOLOGY WALL OCC. SENSOR **
- WALL OCCUPANCY SENSOR **
- DOUBLE SWITCHED WALL OCCUPANCY SENSOR **
- DIMMING DUAL TECHNOLOGY WALL SWITCH OCCUPANCY SENSOR **
- 2-BUTTON DIMMING DUAL TECHNOLOGY WALL SWITCH OCCUPANCY SENSOR **
- SECURITY DOOR CONTACTS
- MD — SECURITY MOTION DETECTOR
- SC — CCTV CAMERA
- KP — SECURITY SYSTEM KEYPAD
- DOOR BELL PUSHBUTTON
- CH — DOOR CHIME WITH LED
- RECEPTACLE - DUPLEX *
- DUPLEX RECEPTACLE MOUNTED ABOVE COUNTER - FIELD VERIFY HEIGHT
- GFCI CONVENIENCE RECEPTACLE - DUPLEX *
- GFCI CONVENIENCE DUPLEX RECEPTACLE MOUNTED ABOVE COUNTER - FIELD VERIFY HEIGHT
- RECEPTACLE DOUBLE DUPLEX *
- HALF SWITCHED DUPLEX RECEPTACLE *
- SINGLE RECEPTACLE *
- DUPLEX RECEPTACLE - CEILING MOUNTED
- HC — LETTER INDICATES DUPLEX HALF CONTROLLED RECEPTACLE *
- C — LETTER INDICATES DUPLEX FULLY CONTROLLED RECEPTACLE *
- FLOOR MOUNTED DUPLEX RECEPTACLE
- FLOOR MOUNTED BOX
- POWER OUTLET - SEE PLANS FOR NEMA TYPE *
- POWER POLE
- WALL TELEPHONE OUTLET **
- [#] VOICE/DATA WALL OUTLET *
- [#] VOICE/DATA OUTLET MOUNTED ABOVE COUNTER - FIELD VERIFY HEIGHT
- [#] SURFACE MOUNTED VOICE/DATA WALL OUTLET *
- [#] SURFACE MOUNTED VOICE/DATA OUTLET MOUNTED ABOVE COUNTER - FIELD VERIFY HEIGHT
- WIRELESS ACCESS POINT (WAP) - CEILING MOUNTED
- WIRELESS ACCESS POINT (WAP) - WALL MOUNTED - FIELD VERIFY HEIGHT
- [#] VOICE/DATA OUTLET - FLOOR MOUNTED
- TV OUTLET *
- [#] VOICE/DATA OUTLET - CEILING MOUNTED
- S — INTERIOR SPEAKERS CEILING MOUNTED
- S — INTERIOR SPEAKERS WALL MOUNTED
- C — CLOCK +8'-0" AFF U.O.N. VERIFY BEFORE INSTALLATION
- PANELBOARD - FLUSH MOUNTED
- EQUIPMENT PANEL - FLUSH MOUNTED
- PANELBOARD - SURFACE MOUNTED
- EQUIPMENT PANEL - SURFACE MOUNTED
- M — METER W/ CURRENT TRANSFORMER
- J / J — JUNCTION BOX - CEILING OR WALL MOUNTED, SIZE PER CODE, TAPE AND TAG WIRES
- MOTOR CONNECTION
- NON-FUSED DISCONNECT SWITCH
- FUSED DISCONNECT SWITCH; FUSED WITH DUAL-ELEMENT FUSES SIZED PER EQUIPMENT MFGR'S NAMEPLATE DATA
- COMBINATION STARTER/FUSED DISCONNECT SWITCH; FUSED DISCONNECT SWITCH ELEMENT FUSES SIZED PER EQUIPMENT MFGRS NAMEPLATE DATA
- MAGNETIC STARTER - NEMA SIZE INDICATED NEMA 3R ENCLOSURE UNLESS OTHERWISE SPECIFIED
- CIRCUIT BREAKER
- GROUND ROD WITH GROUNDWELL BOX
- GROUND ELECTRODE
- NORMALLY OPEN CONTACT
- NORMALLY CLOSED CONTACT
- TRANSFORMER - SEE SINGLE LINE FOR SIZE
- PULLBOX
- ERMS
- FLEX CONDUIT WITH CONNECTION
- CONDUIT - UP
- CONDUIT - DOWN
- E — CONDUIT EMERGENCY SYSTEM
- LV — LOW VOLTAGE WIRING
- SURFACE METAL OR NON-METALLIC RACEWAY
- CONDUIT - CONCEALED IN WALLS OR CEILING
- CONDUIT - EXISTING
- CONDUIT - BELOW SLAB OR UNDERGROUND: 3/4"MIN.
- CAPPED OR STUB-OUT CONDUIT
- CONDUIT CONTINUATION
- #10 — CONDUIT - HOME RUN TO PANEL, TERMINAL CABINET, ETC. RUNS MARKED WITH CROSSHATCHES INDICATE NUMBER OF #12 AWG WIRES WHEN MORE THAN TWO. SIZE CONDUIT ACCORDING TO SPECIFICATIONS AND APPLICABLE CODE. CROSS HATCHES WITH NUMBER ADJACENT INDICATES WIRE SIZE OTHER THAN #12 AWG.
- 2 — SHEET NOTE REFERENCE SYMBOL; SEE ASSOCIATED NOTE ON SAME SHEET
- 3 — SCHEDULE SYMBOL; SEE ASSOCIATED NOTE ON SAME SHEET
- 2 — DETAIL NOTE REFERENCE SYMBOL SEE ASSOCIATED NOTE ON SAME DETAIL
- F301 — FEEDER DESIGNATION; SEE ASSOCIATED NOTE ON SAME DETAIL
- 1 / E3.0 — DETAIL NUMBER; DETAIL OR SECTION REFERENCE; SHEET NUMBER
- 1 — INDICATES QUANTITY OF TELEPHONE OUTLETS
- 2 — INDICATES QUANTITY OF DATA OUTLETS

ABBREVIATIONS

A	AMPERE
AFF	ABOVE FINISHED FLOOR
ALUM/AL	ALUMINUM
ARCH	ARCHITECT
AWG	AMERICAN WIRE GAUGE
BKR	BREAKER
C	CONDUIT
CATV	CABLE TV
CB	CIRCUIT BREAKER
CCTV	CLOSED CIRCUIT TV
CKT	CIRCUIT
CL	CENTER LINE
CLG	CEILING
C.O.	CONDUIT ONLY
CTR	CENTER
D	DIMMER
DIM	DIMENSION
DIST	DISTRIBUTION
(E)	EXISTING
EC	ELECTRICAL CONTRACTOR
(EL)	EVENING LIGHT
EM	EMERGENCY
EMT	ELECTRICAL METALLIC TUBING
ERMS	ENERGY REDUCTION MAINTENANCE SWITCH
EQUIP	EQUIPMENT
EV	ELECTRICAL VEHICLE
FA	FIRE ALARM
FACP	FIRE ALARM CONTROL PANEL
FC	FOOT CANDLE
FIN	FINISH
FL	FLOOR
FLA	FULL LOAD AMPS
FLUOR	FLUORESCENT
(F)	FUTURE
GC	GENERAL CONTRACTOR
GFCI GFI	GROUND FAULT INTERRUPTING
GND, G	GROUND
GRS	GALVANIZED RIGID STEEL
HT	HEIGHT
IC	INTERCOM
IDF	INTERMEDIATE DISTRIBUTION FRAME
INCAND	INCANDESCENT
JB	JUNCTION BOX
KV	KILOVOLT
KVA	KILOVOLT AMPERES
KW	KILOWATT
LCP	LIGHTING CONTROL PANEL
LTG	LIGHTING
LV	LOW VOLTAGE
KCM	THOUSAND CIRCULAR MILS
M.B.	MAIN CIRCUIT BREAKER
MCA	MINIMUM CIRCUIT AMPS
MDF	MAIN DISTRIBUTION FRAME
MECH	MECHANICAL
MH	METAL HALIDE
MLO	MAIN LUGS ONLY
MPOE	MAIN POINT OF ENTRANCE
MTD	MOUNTED
MTG	MOUNTING
MOCP	MAXIMUM OVER CURRENT PROTECTION
(N)	NEW
NIC	NOT IN CONTRACT
NIEC	NOT IN ELECTRICAL CONTRACT
(NL)	NIGHT LIGHT
NO.	NUMBER
NOM	NOMINAL
NTS	NOT TO SCALE
OAH	OVERALL HEIGHT
OC	ON CENTER
OH	OVERHEAD
OFCI	OWNER FURNACED CONTRACTOR INSTALLED
PA	PUBLIC ADDRESS
PB	PULL BOX
PF	POWER FACTOR
PH	PHASE
PIR	PASSIVE INFRARED
PNL	PANEL
PV	PHOTOVOLTAIC
PVC	POLYVINYL CHLORIDE
PWR	POWER
(R)	RELOCATE
(RP)	REMOVABLE POLE
RECPT'S	RECEPTACLES
REQD	REQUIRED
REQMT'S	REQUIREMENT(S)
SHT	SHEET
SLD	SINGLE LINE DIAGRAM
STC	SYSTEMS TERMINATION CABINET
SW	SWITCH
SWBD	SWITCHBOARD
TTB	TELEPHONE TERMINAL BACKBOARD
TYP	TYPICAL
UON	UNLESS OTHERWISE NOTED
UG	UNDERGROUND
V	VOLT
VD	VOLTAGE DROP
W	WATT
W/	WITH
WP	WEATHERPROOF
XFMR	TRANSFORMER

FIRE ALARM

NOTE: SEE FIRE ALARM DRAWINGS FOR QUANTITIES AND MOUNTING HEIGHTS.

- P — MANUAL PULL STATION
- STROBE ONLY
- HORN ONLY
- M — MINI HORN
- HORN/STROBE
- CHIME/STROBE
- HEAT DETECTOR
- SMOKE DETECTOR
- CO — CARBON MONOXIDE ALARM
- DUCT SMOKE DETECTOR
- TAMPER SWITCH
- FLOW SWITCH
- POST INDICATING VALVE
- FIRE SMOKE DAMPER
- BELL (GONG)
- FCP — FIRE ALARM CONTROL PANEL
- APS — AUXILIARY POWER SUPPLY
- FSA — FIRE SYSTEM ANNUNCIATOR
- FTR — FIRE ALARM TRANSPONDER OR TRANSMITTER
- ESR — ELEVATOR STATUS/RECALL
- FAC — FIRE ALARM COMMUNICATOR
- ANN — REMOTE ANNUNCIATORS
- EOL — END OF LINE

* +15" A.F.F. TO BOTTOM OF BOX, U.O.N.
** +48" A.F.F. TO TOP OF BOX, U.O.N.
[#] NUMBER IN BRACKETS DENOTES NUMBER OF CABLE DROPS WHEN MORE THAN (2).

LIGHT FIXTURE SCHEDULE

FIXTURE NOTES:

1. ALL LED LIGHT FIXTURE DRIVERS SHALL BE ELECTRONIC TYPE, 10% TOTAL HARMONIC DISTORTION MAXIMUM.
2. ALL LED LIGHT MODULES SHALL BE ENERGY SAVING 3500° K, 80 CRI MINIMUM, U.O.N. (SEE SPECIFICATIONS FOR MORE INFORMATION).
3. ALL LED DRIVERS (AND ASSOC. FIXTS.) SHALL HAVE MANUFACTURER'S CERTIFICATION OF COMPLIANCE WITH CALIFORNIA ENERGY COMMISSION STANDARDS AND REQUIREMENTS, WHERE SUCH ARE USED IN CONDITIONED SPACES.
4. EXIT SIGNS , EMERGENCY LIGHTS AND LIGHT FIXTURES WITH EMERGENCY BATTERY BACK-UP SHALL SUPPLY A MINIMUM DURATION OF 90 MINUTES OF POWER IN THE EVENT OF A POWER OUTAGE/FAILURE.
5. ALL RECESSED LIGHT FIXTURES SHALL BE U.L. APPROVED FOR ZERO CLEARANCE INSULATION COVER WHEN INSTALLED IN INSULATED CEILINGS.

TYPE	DESCRIPTION	LAMPS	MANUFACTURER
A	2' x 2' T-BAR MOUNTED LED FIXTURE, DIE FORMED WHITE C.R.S. HOUSING WITH IMPACT-RESISTANT SYMMETRIC DIFFUSED ACRYLIC OPTIC, INSET DOOR; FINISH PER ARCHITECT, "SP=ELV LINE VOLTAGE DIMMING DRIVER", 120V.	98W LED 10,286LM	KENALL LIGHTING CSEDI LED 2x2 SERIES
AE	SAME AS FIXTURE TYPE "A" EXCEPT WITH INTEGRAL EMERGENCY BATTERY BACKUP.	98W LED 10,286LM	KENALL LIGHTING CSEDI LED 2x2 SERIES
A1	2' x 2' T-BAR MOUNTED LED FIXTURE, DIE FORMED WHITE C.R.S. HOUSING WITH ROUND CENTER OPTICS, ANGLED DOOR; HIGHT OUTPUT LIGHT ENGINE, FINISH PER ARCHITECT, 0-10V DIMMING ELECTRONIC DRIVER, 120V.	48.0W LED 5523LM	HE WILLIAMS ATS1 LED 2x4 SERIES
A1E	SAME AS FIXTURE TYPE "A1E" EXCEPT WITH INTEGRAL EMERGENCY BATTERY PACK.	48.0W LED 5523LM	HE WILLIAMS ATS1 LED 2x4 SERIES

LIGHT FIXTURE SCHEDULE (CONTINUED)

TYPE	DESCRIPTION	LAMPS	MANUFACTURER
B	2' x 2' T-BAR MOUNTED LED FIXTURE. DIE FORMED AND WELDED STEEL WASH-DOWN HOUSING, CLEAR ACRYLIC DIFFUSER , UNIVERSAL 0-10V DIMMING ELECTRONIC DRIVER, 120V. FINISH PER ARCHITECT.	54.4W LED 6513LM	HE WILLIAMS 50 SERIES
E	EXIT LIGHT AND 6 WATT EMERGENCY BUG-EYE, WIRE GUARD, HIGH LUMEN OUTPUT, LED, BATTERY BACKUP, RED LETTERS, WHITE BACKGROUND, SEE PLANS FOR MOUNTING, NUMBER OF FACES AND ARROWS, 120V.	FURN. WITH FIXT.	DUAL-LITE EVCHL SERIES
XA	15.6" W x 26.3" L POLE MOUNTED LED FIXTURE, DIE CAST AL HOUSING, VERIFY FIXTURE AND POLE FINISH WITH ARCHITECT, TYPE 3 DISTRIBUTION WITH COMFORT OPTICS, NEUTRAL WHITE, WITH EMERGENCY BATTERY PACK, UNIVERSAL VOLTAGE. MOUNT ON 20' ROUND POLE.	75W LED 3000°K	GARDCO SIGNIFY P26 SERIES POLE: SRS-20-4.0 SERIES
XA1	SAME AS FIXTURE TYPE "XA", EXCEPT (2) HEAD FIXTURE WITH FIXTURES LOCATED AT 180 DEGREES.	(2)75W LED 3000°K	GARDCO SIGNIFY P26 SERIES POLE: SRS-20-4.0 SERIES
XA2	SAME AS FIXTURE TYPE "XA", EXCEPT WITH EXTERNAL HOUSE SIDE SHIELD.	75W LED 3000°K	GARDCO SIGNIFY P26 SERIES POLE: SRS-20-4.0 SERIES
XB	42"H x 8"DIA. ROUND BOLLARD. DIE-CAST ALUMINUM BEVEL TOP WITH DIE-CAST ZINC LOUVER CONNECTED TO AN EXTRUDED ALUMINUM LOWER HOUSING. 360° DISTRIBUTION, MARINE GRADE PAINT, NATURAL ALUMINUM COLOR. UNIVERSAL VOLTAGE DRIVER, LOW LEVEL (8W) MOTION RESPONSE.	41W LED 3000°K	GARDCO SIGNIFY BRM832

APPLICABLE CODES & STANDARDS

CODES:

1. 2022 CALIFORNIA ADMINISTRATIVE CODE C.A.C., PART 1, TITLE 24, C.C.R.
2. 2022 CALIFORNIA BUILDING CODE (CBC) C.C.R., TITLE 24, VOL. 1 & 2 BASED ON THE 2021 INTERNATIONAL BUILDING CODE (IBC) WITH CALIFORNIA AMENDMENTS.
3. 2022 CALIFORNIA ELECTRICAL CODE (CEC) C.C.R., TITLE 24, PART 3 BASED ON THE 2020 NATIONAL ELECTRICAL CODE (NEC) WITH CALIFORNIA AMENDMENTS.
4. 2022 CALIFORNIA MECHANICAL CODE (CMC) C.C.R., TITLE 24, PART 4 BASED ON THE 2021 UNIFORM MECHANICAL CODE (UMC) WITH CALIFORNIA AMENDMENTS.
5. 2022 CALIFORNIA PLUMBING CODE (CPC) C.C.R., TITLE 24, PART 5 BASED ON THE 2021 UNIFORM PLUMBING CODE (UPC) WITH CALIFORNIA AMENDMENTS.
6. 2022 CALIFORNIA ENERGY CODE C.C.R., TITLE 24, PART 6.
7. 2022 CALIFORNIA FIRE CODE (CFC) C.C.R., TITLE 24, PART 9 BASED ON THE 2021 INTERNATIONAL FIRE CODE (IFC) WITH CALIFORNIA AMENDMENTS.
8. 2022 CALIFORNIA GREEN BUILDING STANDARDS CODE C.C.R., TITLE 24, PART 11.
9. 2022 CALIFORNIA REFERENCED STANDARDS CODE C.C.R., TITLE 24, PART 12.
10. TITLE 19 C.C.R., PUBLIC SAFETY, STATE FIRE MARSHAL REGULATIONS.
11. NATIONAL FIRE ALARM CODE (NFPA 72) 2019.
12. CITY OF SOLEDAD ORDINANCES, CODES, AND REGULATIONS.

STANDARDS:

1. AMERICAN NATIONAL STANDARDS INSTITUTE (ANSI)
2. ELECTRONICS INDUSTRIES ASSOCIATION (EIA)
3. INSTITUTE OF ELECTRICAL AND ELECTRONIC ENGINEERS (IEEE)
4. NATIONAL ELECTRICAL MANUFACTURERS ASSOCIATION (NEMA)
5. NATIONAL ELECTRICAL TESTING ASSOCIATION (NETA)
6. UNDERWRITER LABORATORIES (UL)
7. CALIFORNIA OCCUPATIONAL SAFETY AND HEALTH ACT STANDARDS (CAL/OSHA)

SHEET INDEX

E0.1 SYMBOLS, ABBREVIATIONS, LIGHT FIXTURE SCHEDULE, CODES, STANDARDS, NOTES & SHEET INDEX.
E0.2 CALIFORNIA ENERGY COMPLIANCE TITLE 24 (BUILDING INTERIOR).
E0.3 CALIFORNIA ENERGY COMPLIANCE TITLE 24 (BUILDING EXTERIOR).
E1.1 ELECTRICAL SINGLE LINE DIAGRAM.
E1.2 PANELBOARD SCHEDULES.
E2.1 ELECTRICAL SITE PLAN.
E2.2 BUILDING FLOOR PLAN.
E3.1 KITCHEN & RESTROOM ELECTRICAL DEMOLITION PLAN.
E3.2 GYM & STAGE LIGHTING DEMOLITION PLAN.
E4.1 KITCHEN & RESTROOM POWER PLAN.
E5.1 KITCHEN & RESTROOM LIGHTING PLAN.
E5.2 GYM & STAGE LIGHTING PLAN.
E6.1 ELECTRICAL DETAILS.
E6.2 ELECTRICAL DETAILS.
E6.3 ELECTRICAL DETAILS. 1
E6.4 ELECTRICAL DETAILS.
E7.1 ELECTRICAL SPECIFICATIONS.
E7.2 ELECTRICAL SPECIFICATIONS.

IN STUDIO ARCHITECTURE
250 MAIN STREET
SALINAS, CA 93901
831.320.2655

DATES 1 PLAN CHECK 08.11.23

THE INFORMATION ON THESE PLANS IS PROPERTY OF IN STUDIO ARCHITECTURE. UNAUTHORIZED USE IS PROHIBITED.

AURUM CONSULTING ENGINEERS MONTEREY BAY, INC.
Project No. 22-407.00
404 W. Franklin St. • Suite 100 • Monterey, CA 93940
T.831.646.3330 • F.831.646.3336 • www.acemb.com

These drawings are instruments of service and are the property of AURUM CONSULTING ENGINEERS MONTEREY BAY, INC. All designs and other information in the drawings are for use on the specified project and shall not be used otherwise without the expressed written permission of AURUM CONSULTING ENGINEERS MONTEREY BAY, INC.

REGISTERED PROFESSIONAL ENGINEER ELDRIDGE O. BELL No. E17789 EXP. 6/30/25 ELECTRICAL STATE OF CALIFORNIA

CLIENT

CITY OF SOLEDAD

PROJECT

COMMUNITY CENTER BLDG. MODERNIZATION

560 WALKER DR.
SOLEDAD, CA 93960

SHEET

SYMBOLS, ABBREVIATIONS, LIGHT FIXTURE SCHEDULE, CODES, STANDARDS, NOTES & SHEET INDEX

PROJECT NUMBER:	2251
ISSUED:	05-25-2023
DRAWN BY:	RG/JR
CHECKED BY:	LV/AR
FILENAME:	

E0.1

GENERAL NOTE:

SEE SHEET E6.3 FOR LIGHTING CONTROLS AND SEQUENCE OF OPERATION.

SHEET NOTES

1. CONTRACTOR SHALL RECONNECT NEW LIGHT FIXTURE TO EXISTING PRESERVED LIGHTING CIRCUIT AND CONTROL WIRING.
2. CONTRACTOR SHALL CONNECT NEW LIGHT FIXTURE WITH EMERGENCY BATTERY BACKUP TO NEAREST UNSWITCH HOT LIGHTING CIRCUIT. PULL NEW UNSWITCHED HOT WIRING WHERE NEEDED AND CONNECT TO EMERGENCY BATTERY BACKUP.
3. CONTRACTOR SHALL RECONNECT NEW LINE VOLTAGE DIMMING SWITCH TO EXISTING PRESERVED LIGHTING CONTROL WIRING FOR LIGHTS.
4. CONTRACTOR SHALL PROVIDE AND INSTALL NEW VIVE HUB CONTROL SYSTEM, ALONG WITH NEW DIMMING CONTROLS, SHOWN IN SAME LOCATION AS EXISTING DEMOLISHED PANEL. RECONNECT EXISTING PRESERVED SWITCHING WIRING TO NEW DIMMING CONTROLS. SPLICE AND EXTEND CIRCUITS AS NEEDED TO RECONNECT TO NEW PANEL.
5. CONTRACTOR SHALL CONNECT NEW EXIT SIGN FIXTURE TO EXISTING PRESERVED UNSWITCH HOT LIGHTING CIRCUIT. PULL NEW UNSWITCHED HOT WIRING WHERE NEEDED AND CONNECT TO EXIT SIGN.
6. NOTE NOT USED.

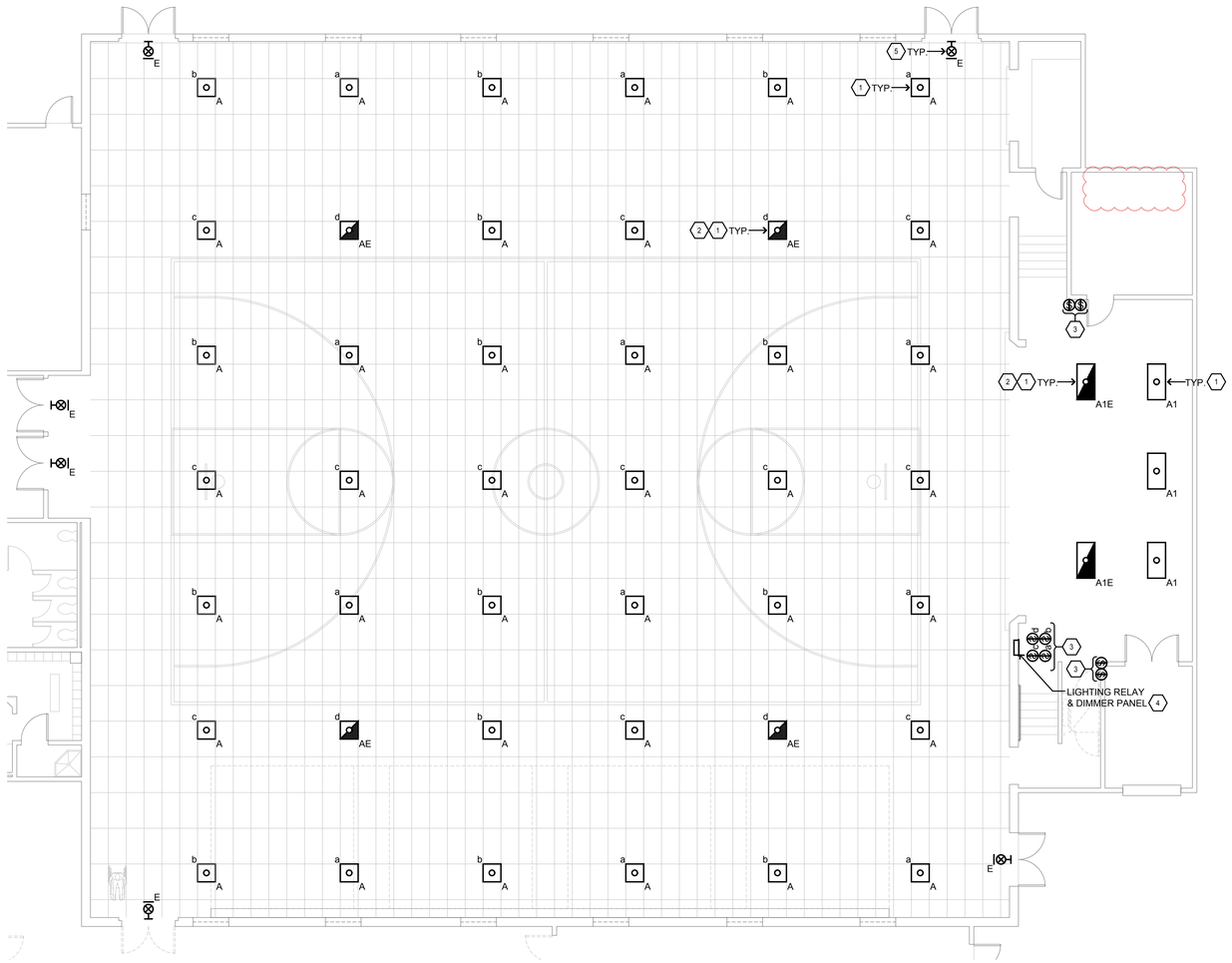

SCALE: 1/8"=1'-0"

NORTH

IN STUDIO ARCHITECTURE
250 MAIN STREET
SALINAS, CA 93901
831.320.2655

DATES

THE INFORMATION ON THESE PLANS IS PROPERTY OF IN STUDIO ARCHITECTURE. UNAUTHORIZED USE IS PROHIBITED.

AURUM CONSULTING ENGINEERS MONTEREY BAY, INC.
Project No. 22-407.00
404 W. Franklin St. • Suite 100 • Monterey, CA 93940
T.831.646.3330 • F.831.646.3336 • www.acemb.com

These drawings are instruments of service and are the property of AURUM CONSULTING ENGINEERS MONTEREY BAY, INC. All designs and other information in the drawings are for use on the specified project and shall not be used otherwise without the expressed written permission of AURUM CONSULTING ENGINEERS MONTEREY BAY, INC.

REGISTERED PROFESSIONAL ENGINEER
CLAYTON O. BUTT
Lic. #17776
Exp. 6/30/24
ELECTRICAL
STATE OF CALIFORNIA

CLIENT

CITY OF SOLEDAD

PROJECT

COMMUNITY CENTER BLDG. MODERNIZATION

560 WALKER DR.
SOLEDAD, CA 93960

SHEET

GYM & STAGE LIGHTING PLAN

PROJECT NUMBER:	2251
ISSUED:	05-25-2023
DRAWN BY:	RG/JR
CHECKED BY:	LV/AR
FILENAME:	

E5.2

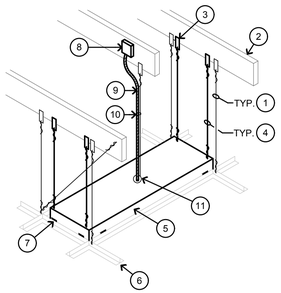

DETAIL NOTES:

1. EXISTING "T-BAR" CEILING GRID SUPPORT WIRE.
2. EXISTING CEILING STRUCTURE.
3. TYPICAL ANCHOR TO CEILING STRUCTURE, SAME AS APPROVED GRID WIRE ANCHOR.
4. ONE #12 GA TAUT WIRE AT EACH CORNER OF FIXTURE W/ FOUR (4) FULL TURNS FOR EACH #12 WIRE IN 1 ½" DISTANCE. (BY ELECTRICAL CONTRACTOR).
5. LIGHT FIXTURE.
6. CEILING GRID SYSTEM BY OTHERS.
7. EARTHQUAKE CLIPS, 4 EA. TYP.
8. ANCHOR FIXTURE OUTLET BOX TO CEILING STRUCTURE
9. ½" FLEX CONDUIT, 2#12 & 1#12GND.
10. IF FLEX CONDUIT LENGTH EXCEEDS 6 FOOT, FASTEN FLEX CONDUIT TO FLEX CONDUIT SUPPORT WIRE PER N.E.C. SPACING.
11. CONNECT FLEX CONDUIT SUPPORT WIRE TO FIXTURE.

FIXTURE MOUNTING GENERAL NOTES:

A. ATTACH ALL LIGHT FIXTURES TO THE CEILING GRID RUNNERS TO RESIST A HORIZONTAL FORCE EQUAL TO THE WEIGHT OF THE FIXTURE.

B. FLUSH OR RECESSED LIGHT FIXTURE WEIGHING LESS THAN 56 POUNDS MAY BE SUPPORTED DIRECTLY ON THE RUNNERS OF A HEAVY DUTY GRID SYSTEM BUT, IN ADDITION, THE FIXTURES MUST HAVE A MINIMUM OF TWO (2) #12 GAUGE SLACK SAFETY WIRES ATTACHED TO THE DIAGONAL CORNERS & ANCHORED TO THE STRUCTURE ABOVE. LIGHT FIXTURES IN A MEDIUM DUTY GRID SYSTEM MUST HAVE TAUT SAFETY WIRES.

C. ALL FLUSH OR RECESSED LIGHT FIXTURES WEIGHING 56 POUNDS OR MORE MUST BE INDEPENDENTLY SUPPORTED BY NO LESS THAN FOUR (4) TAUT #12 GAUGE WIRES. EACH "TAUT" WIRE SHALL BE ATTACHED TO THE STRUCTURE REGARDLESS OF THE TYPE OF CEILING GRID SYSTEM USED.

D. THE FOUR (4) TAUT #12 GAUGE WIRES INCLUDING THEIR ATTACHMENT TO THE STRUCTURE NOTED ABOVE, MUST BE CAPABLE OF SUPPORTING FOUR (4) TIMES THE WEIGHT OF THE COMPLETE UNIT.

6 T-BAR MOUNTING FIXTURE DETAIL

NO SCALE

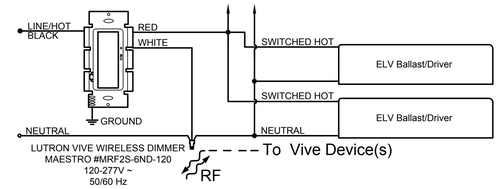

4 LINE VOLTAGE ELV DIMMING WIRING DIAGRAM

NO SCALE

3 DETAIL NOT USED

NO SCALE

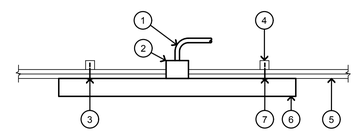

DETAIL NOTES:

1. BRANCH CIRCUIT CONDUIT.
2. FIXTURE OUTLET BOX.
3. ALL SCREWS TO HAVE MIN. 1½" PENETRATION INTO FRAMING.
4. 2 x _ JOIST OR BLOCKING.
5. FINISHED CLG. MATERIAL. (SEE ARCH).
6. SURFACE MOUNT FIXTURE.
7. FASTEN FIXTURE TO FRAMING W/ ¼" DIA. LAG SCREW AT EACH CORNER.

GENERAL NOTE:

A. PRE-DRILL ALL FRAMING TO MINIMIZE POSSIBILITY OF SPLITTING BLOCKING.

2 SURFACE MOUNTED FIXTURE DETAIL

NO SCALE

SEE FLOOR PLANS FOR INSTALLATION LOCATION

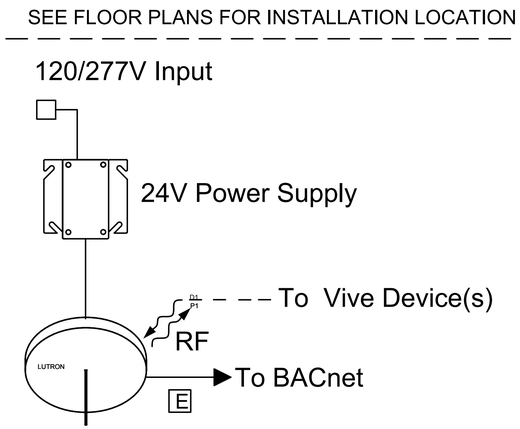

QTY: SEE FLOOR PLANS
HJS-1-FM
UPremium Vive Hub, flush-mount adapter, and power supply.

HJS-1-FM to communicate with smartphone, tablet, or computer using built in wifi. Smartphone, tablet, or computer to be provided by others. Multiple Vive Hubs to communicate using wifi devices; still operating independently.

5 INTERIOR VIVE HUB GYM LIGHTING CONTROL SYSTEM

NO SCALE

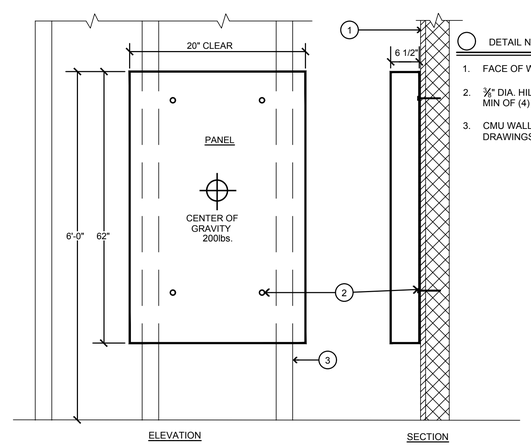

DETAIL NOTES:

1. FACE OF WALL
2. ⅜" DIA. HILTI KB3 ANCHOR WITH 2½" EMBEDMENT, MIN OF (4) PENETRATIONS PER PANEL.
3. CMU WALL FOR FRAMING. SEE STRUCTURAL DRAWINGS.

1 SURFACE MTD PANEL DETAIL

NO SCALE

IN STUDIO ARCHITECTURE
250 MAIN STREET
SALINAS, CA 93901
831.320.2655

DATES

THE INFORMATION ON THESE PLANS IS PROPERTY OF IN STUDIO ARCHITECTURE. UNAUTHORIZED USE IS PROHIBITED.

AURUM CONSULTING ENGINEERS MONTEREY BAY, INC.
Project No. 22-407.00
404 W. Franklin St. • Suite 100 • Monterey, CA 93940
T.831.646.3330 • F.831.646.3336 • www.acemb.com

These drawings are instruments of service and are the property of AURUM CONSULTING ENGINEERS MONTEREY BAY, INC. All designs and other information in the drawings are for use on the specified project and shall not be used otherwise without the expressed written permission of AURUM CONSULTING ENGINEERS MONTEREY BAY, INC.

REGISTERED PROFESSIONAL ENGINEER
ELDRIDGE O. BRUTE
No. E17776
Exp. 6/30/24
ELECTRICAL
STATE OF CALIFORNIA

CLIENT

CITY OF SOLEDAD

PROJECT

COMMUNITY CENTER BLDG. MODERNIZATION

560 WALKER DR.
SOLEDAD, CA 93960

SHEET

ELECTRICAL DETAILS

PROJECT NUMBER:	2251
ISSUED:	05-25-2023
DRAWN BY:	RG/JR
CHECKED BY:	LV/AR
FILENAME:	

E6.3

DAVID CONSTRUCTION

SUBMITTAL TRANSMITTAL

Project: SOLEDAD COMMUNITY CENTER BLDG. MODERN. Awarded: EXECUTED 05/01/2024

560 WALKER DRIVE, SOLEDAD, CA 93960 Project Number: F23-08 / DCM NO. 24026

TRANSMITTAL A

To: ALEX RAMOS Date: 09/27/2024 Submittal No. 26C

From: DAVID CONSTRUCTION & MANAGEMENT By: DAVID PICKERING ☐ Resubmission

Qty.	Reference / Number	Title / Description / Manufacturer	Spec. Section Title and Paragraph / Drawing Detail Reference
01	N/A	ELECTRICAL - GYM LIGHTING FIXTURES	26 00 00 (ADD ALT)

- ■ Submitted for review and approval
- ☐ Resubmitted for review and approval
- ■ Complies with contract requirements
- ■ Will be available to meet construction schedule
- ☐ A/E review time included in construction schedule
- ☐ Substitution involved - Substitution request attached
- ☐ If substitution involved, submission includes point-by-point comparative data or preliminary details
- ☐ Items included in submission will be ordered immediately upon receipt of approval

Other remarks on above submission: ☐ One copy retained by sender

TRANSMITTAL B

To (A/E): Attn: Date Rec'd by Contractor:

From (Contractor): By: Date Trnsmt'd by Contractor:

- ☐ Approved
- ☐ Approved as noted
- ☐ Revise / Resubmit
- ☐ Rejected / Resubmit

Other remarks on above submission: ☐ One copy retained by sender

TRANSMITTAL C

To (Contractor): DAVID CONSTRUCTION & MANAGEMENT Attn: DAVID PICKERING Date Rec'd by A/E:

From (A/E): ☐ Other By: Date Trnsmt'd by A/E:

- ☐ Approved
- ☐ Approved as noted
- ☐ Not subject to review
- ☐ No action required
- ☐ Revise / Resubmit
- ☐ Rejected / Resubmit
- ☐ Approved as noted / Resubmit
- ☐ Provide file copy with corrections identified
- ☐ Sepia copies only returned
- ☐ Point-by-point comparative data required to complete approval process
- ☐ Submission Incomplete / Resubmit

Other remarks on above submission: ☐ One copy retained by sender

TRANSMITTAL D

To (Subcontractor): Attn: Date Rec'd by Contractor:

From (Contractor): By: Date Trnsmt'd by Contractor:

Copies: ☐ Owner ☐ Consultants ☐ ☐ ☐ ☐ One copy retained by sender

September 1996
CSI Form 12.1A

Peninsula
1001 Bing Street
San Carlos, CA 94070
(650) 591-5571

South Bay
255 Commercial Street
San Jose, CA 95112
(408) 297-2200

East Bay
1340 Galaxy Way
Concord, CA 94520
(925) 671-7870

www.cedbayarea.com

Soledad Community Center Gym

Sep 26 2024

Lighting Submittals for Approval

SUBMITTAL REVIEW

AURUM CONSULTING ENGINEERS, INC.

- [ ] NO EXCEPTIONS TAKEN
- [ ] REVISE AND SUBMIT
- [x] MAKE CORRECTIONS NOTED
- [ ] REJECTED

The review is only to check for general conformance with the information given in the drawings and specifications. The review and/or comments do not relieve the contractor from compliance with the intentions and requirements of the contract document.

BY Riley Schofield DATE 10/24/24

Team

Contractor Watt Electric

1. See comments on submittal below for corrections to make.
2. See elevation detail on page 51 for mounting of lighting relay control panel, and lighting control equipment.

Prepared By

Michelle Jacobs - CED Bay Area
mjacobs@cedbayarea.com
1001 Bing Street
San Carlos, CA - California 94070, USA

CED Bay Area
Gold Star Service Since 1957
Peninsula
1001 Bing Street
San Carlos, CA 94070
(650) 591-5571
South Bay
255 Commercial Street
San Jose, CA 95112
(408) 297-2200
East Bay
1340 Galaxy Way
Concord, CA 94520
(925) 671-7870
www.cedbayarea.com

Soledad Community Center Gym

Lighting Submittals for Approval

Table of Contents

Datasheets

New Section			
Type	Manufacturer	Model Number	Pg.
A	KENALL	CSEDI-22-90L-35K8-DIM1-120-2F-4H-SYM	1
AE	KENALL	CSEDI-22-90L-35K8-DIM1-120-2F-4H-SYM	4
E	DUAL LITE	LES-??-??-R-??-WE	7
INV	BODINE	ELIS250I2UO30ADI2 - (ELI-S-250)	11
	WATTSTOPPER	LMCP24-10V 115/277-24HD	14
	WATTSTOPPER	LENC24S	18
	WATTSTOPPER	LMDM-101-W-U	20
	WATTSTOPPER	LMCT-100-2-U	22

Job Name : Soledad Community Center Gym
Manufacturer : KENALL
Model Number : CSEDI-22-90L-35K8-DIM1-120-2F-4H-SYM

Type : A

PROJECT INFORMATION

Job Name _____

Fixture Type _____

Catalog Number _____

Approved by _____

SIMPLESEAL™

CSEDI SERIES – LED – INSET DOOR

PRODUCT FEATURES:

- High-output, high-CRI LED lamp sources for accurate color rendition and lighting performance
- Diffused high-efficiency lens for reduced glare
- Recessed ceiling mount; grid or flange - 1'×4', 2'×2', 2'×4'
- Suitable for universal installation into 1.0" and 1.5" grid or flange (drywall) ceilings
- One piece inset doorframe, secured to housing with aircraft cables

1'×4' 2'×2' 2'×4'

SPECIFICATIONS

HOUSING: Standard 24-gauge (optional 20-gauge) cold rolled steel, hole-free, one-piece, seam-welded construction.18-gauge housing flange with mitered and welded corners. White TGIC polyester powder coat finish – 5-step pre-treatment. Salt spray test: 1,000 hours; Reflectance: 92%.

DOORFRAME: 18-gauge CRS. One-piece inset-style construction with welded corners. Gloss white TGIC polyester powder coat finish with 5-stage pre-treatment. Doorframe secured to housing with stainless steel aircraft cables and captive, flush-mounted Phillips-head fasteners. Closed-cell silicone gasket seals doorframe to housing.

OPTICS: Symmetric optic includes diffused, impact-resistant acrylic lens.

ELECTRICAL: Available 3000K, 3500K, 4000K and 5000K color temperatures with maximum 3-step MacAdam variation allowance. 120-277VAC and 347VAC, 50/60Hz electrical input with serviceable high power factor electronic, constant-current driver (<20% THD, >0.95 PF). Standard 0-10V dimming with 1-100% range with dim to dark capabilities (non dim-to-dark with 347V; 660µA maximum source current). Optional 0-10V dimming with 0.1-100% range and dim-to-dark capabilities via eldoLED SOLOdrive series driver (n/a 347V input; ≤0.5V required from dimming control for dim-to-dark operation; 800µA max. source current).

SENSOR & CONTROLS: Optional sensor available with compatible third party controls. To see the full list of compatible controls, click here.

INSTALLATION: Non-IC recessed ceiling mounting into grid and flange application types. Flange installation utilizes inclu
1" and 1.5" T-bar ceilings. Universal installation into grid or flange (drywall) ceiling applications. See Options for continuo

PHOTOMETRICS: Photometry tested to the IESNA LM-79-08 standard. For additional photometric data, please go to ww

WARRANTY: Limited five (5) year LED warranty.

LISTINGS: Luminaire is certified to UL standards by Intertek Testing Laboratories for Wet Location. Certified IP65 per IEC
labs rated BSL 1 and 2. Meets FED-STD-209E/Class 1 (ISO 3) Cleanrooms. Suitable for EU GMP Grade A cleanrooms. Suita
otherwise noted. CSEDI24 is participating in Declare.

Contractor shall coordinate with manufacturer to provide "SP=ELV Dimming Driver", for use with existing line voltage dimming wiring.

LED IP65 NSF ISO 3 Class 1 CCEA Approved BSL 1-2 Declare.

ORDERING INFORMATION (Ex: CSEDI-24-67L-40K8-DIM1-DV-2F-4H-SYM)

Model	Size	Lamp Power	Lamp Color	Driver	Voltage	Doorframe	Housing	Optics	Options	Accessories
CSEDI								SYM		

Size
- **14** 1'×4'
- **22** 2'×2'
- **24** 2'×4'

Lamp Power

1'×4'
- **45L** 45 Watt LED
- **67L** 67 Watt LED
- **90L** 90 Watt LED

2'×2'
- **45LD** 45 Watt Dual-Row LED
- **67L** 67 Watt LED
- **90L** 90 Watt LED

2'×4'
- **45LD** 45 Watt Dual-Row LED
- **67L** 67 Watt LED
- **90L** 90 Watt LED
- **135L** 135 Watt LED
- **180L** 180 Watt LED

Lamp Color
- **30K8** 3000K / 82 CRI min.
- **35K8** 3500K / 82 CRI min.
- **40K8** 4000K / 82 CRI min.
- **50K8** 5000K / 82 CRI min.

Driver Type
- ~~**DIM1** 0-10V Dimming to 1%~~
- **DIM01** 0-10V Dimming to 0.1% (n/a with 347V)

Voltage
- **DV** 120-277VAC, 50/60Hz
- **120** 120VAC
- **277** 277VAC
- **347** 347VAC

Doorframe Options
- **5F** 20-Ga Type 304 SS Brushed
- **2F** 18-Ga CRS (STD)
- **AF** Anodized Aluminum
- **PAF** Painted Fabricated Aluminum

Housing Options
- **4H** 24-Ga CRS (STD)
- **2H** 20-Ga CRS
- **5H** 20-Ga Type 304 SS
- **PAH** .050" Painted Aluminum

Optics
- **SYM** Symmetric, Diffused DR Acrylic

Options
- **LEL‡** 8.4W Emergency Battery Pack
- **20KV** 20KV/KA Surge Protection per IEEE/ANSI C62.41.2 Cat. A
- **AMF▲** Antimicrobial Finish
- **FS** Fuse & Holder
- **HJ** Sealed Wireway
- **MS** Motion Sensor (n/a with 347 Voltage Option)
- **RF•** Radio Frequency Filter
- **RM†** Continuous Row Mounting
- **2C** Two Circuit Wiring (1'x4'-45L single circuit operation will yield uneven lens luminance)

Accessories
- **IF*†** Install Frame

* Add .375" to ceiling cut out dimensions
† Only available when installed in drywall ceilings (flange mount)
• Voltage specific selection required
‡ n/a with 180L lamp option or 347V input; voltage-specific selection required and height of fixture is 5.875" when specified with 135L lamp option; 0°C/32°F min. operating environment.
▲ Applied only to exposed painted surfaces of luminaire (not available on stainless steel doorframes)

Click HERE for CSEDI 'Fast Track' Ordering Options
Ships in 5 days

www.kenall.com | P: 800-4-Kenall | F: 262-891-9700 | 10200 55th Street Kenosha, Wisconsin 53144, USA
A brand of legrand
This product is able to comply with the latest domestic preference legislation, such as the Buy American Act (BAA), Trade Agreement Ace (TAA), Build America, Buy America Act (BABA), and others. It may be covered by patents found at www.kenall.com/patents.Content of specification sheets is subject to change; please consult www.kenall.com for current product details. ©2024 Kenall Mfg.Co.

CSEDI_14_22_24-061622

For additional photometry, go to www.kenall.com

SIMPLESEAL™

CSEDI SERIES – TECHNICAL DATA

PERFORMANCE

Model	Lamp Type	Initial Delivered Lumens @ 25°C	Efficacy (lm/W)	Input Power (W)	Drive Current (mA)	Estd. L70 LED Life (Hrs)
CSEDI14	45L-30K8	5,241	107	49	100	80,000
	45L-35K8	5,403	110			
	45L-40K8	5,587	114			
	45L-50K8	5,810	119			
	67L-30K8	8,028	112	72	75	80,000
	67L-35K8	8,277	115			
	67L-40K8	8,559	119			
	67L-50K8	8,901	124			
	90L-30K8	10,243	105	98	100	60,000
	90L-35K8	10,560	108			
	90L-40K8	10,920	111			
	90L-50K8	11,357	116			
CSEDI22	45LD-30K8	5,069	103	49	100	80,000
	45LD-35K8	5,226	107			
	45LD-40K8	5,404	110			
	45LD-50K8	5,620	115			
	67L-30K8	7,765	108	72	75	80,000
	67L-35K8	8,005	111			
	67L-40K8	8,278	115			
	67L-50K8	8,609	120			
	90L-30K8	9,978	102	98	100	60,000
	90L-35K8	10,286	105			
	90L-40K8	10,637	109			
	90L-50K8	11,062	113			
CSEDI24	45LD-30K8	5,851	127	46	50	100,000
	45LD-35K8	6,238	136			
	45LD-40K8	6,347	138			
	45LD-50K8	6,601	143			
	67L-30K8	8,139	113	72	75	80,000
	67L-35K8	8,677	121			
	67L-40K8	8,828	123			
	67L-50K8	9,181	128			
	90L-30K8	10,641	109	98	100	60,000
	90L-35K8	10,970	112			
	90L-40K8	11,344	116			
	90L-50K8	11,798	120			
	135L-30K8	15,084	103	147	100	60,000
	135L-35K8	15,550	106			
	135L-40K8	16,081	109			
	135L-50K8	16,724	114			
	180L-30K8	20,568	105	196	100	60,000
	180L-35K8	21,203	108			
	180L-40K8	21,927	112			
	180L-50K8	22,804	116			

Displayed information is for selected luminaires only. Additional wattages and color temperatures are also available.
Visit www.kenall.com for additional information.

www.kenall.com | P: 800-4-Kenall | F: 262-891-9700 | 10200 55th Street Kenosha, Wisconsin 53144, USA
A brand of legrand

This product is able to comply with the latest domestic preference legislation, such as the Buy American Act (BAA), Trade Agreement Ace (TAA), Build America, Buy America Act (BABA), and others. It may be covered by patents found at www.kenall.com/patents.Content of specification sheets is subject to change; please consult www.kenall.com for current product details. ©2024 Kenall Mfg.Co.

CSEDI_14_22_24-061622

Job Name : Soledad Community Center Gym
Manufacturer : KENALL
Model Number : CSEDI-22-90L-35K8-DIM1-120-2F-4H-SYM

Type : A

SIMPLESEAL™

CSEDI SERIES – TECHNICAL DATA

PERFORMANCE

Model: CSEDI-14-67L-40K8-DIM1-DV-2F-2H-SYM

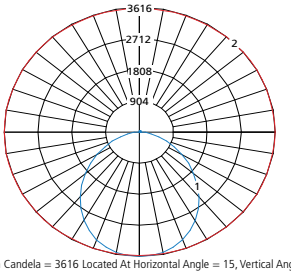

Maximum Candela = 3616 Located At Horizontal Angle = 15, Vertical Angle = 5

1 - Vertical Plane Through Horizontal Angles (15-195) (Through Max. Cd.)
2 - Horizontal Cone Through Vertical Angle (5) (Through Max. Cd.)

Model: CSEDI-22-90L-40K8-DIM1-DV-2F-2H-SYM

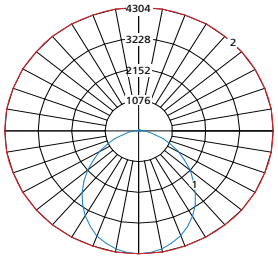

Max Candela = 4304 Located At Horizontal Angle = 0, Vertical Angle = 0

1 - Vertical Plane Through Horizontal Angles (0 - 180) (Through Max. Cd.)
2 - Horizontal Cone Through Vertical Angle (0) (Through Max. Cd.)

Model: CSEDI-24-180L-40K8-DIM1-DV-2F-2H-SYM

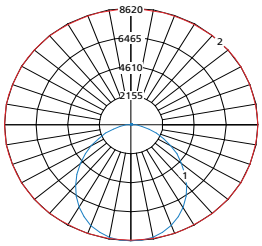

Max Candela = 8620 Located At Horizontal Angle = 0, Vertical Angle = 5

1 - Vertical Plane Through Horizontal Angles (0 - 180) (Through Max. Cd.)
2 - Horizontal Cone Through Vertical Angle (5) (Through Max. Cd.)

DIMENSIONAL DATA

GASKET PROFILE

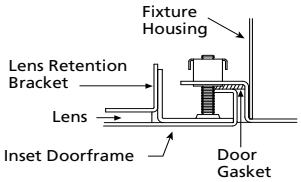

CROSS SECTION

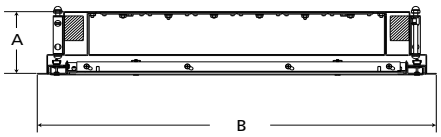

CEILING CUTOUT

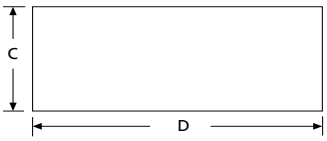

DIMENSIONAL DATA (IN INCHES & CENTIMETERS)

	A	B	C	D
12×48	4.20	11.75 × 47.75	10.85	46.85
30.48cm×121.92cm	10.67	29.85 × 121.29	27.56	119.00
24×24	4.20	23.75 × 23.75	22.85	22.85
60.96cm×60.96cm	10.67	60.33 × 60.33	58.04	58.04
24×48	4.20	23.75 × 47.75	22.85	46.85
60.96cm×121.92cm	10.67	60.33 × 121.29	58.04	119.00

* Add .375" (.95cm) to ceiling cut out dimensions when IF Option is specified

** Height is 5.875" (15 cm) with 135L lamp option when ordered in conjunction with LEL option.

www.kenall.com | P: 800-4-Kenall | F: 262-891-9700 | 10200 55th Street Kenosha, Wisconsin 53144, USA
A brand of legrand
This product is able to comply with the latest domestic preference legislation, such as the Buy American Act (BAA), Trade Agreement Ace (TAA), Build America, Buy America Act (BABA), and others. It may be covered by patents found at www.kenall.com/patents.Content of specification sheets is subject to change; please consult www.kenall.com for current product details. ©2024 Kenall Mfg.Co.

CSEDI_14_22_24-061622

Job Name : Soledad Community Center Gym
Manufacturer : KENALL
Model Number : CSEDI-22-90L-35K8-DIM1-120-2F-4H-SYM

Type : AE

PROJECT INFORMATION

Job Name _____

Fixture Type _____

Catalog Number _____

Approved by _____

SIMPLESEAL™

CSEDI SERIES – LED – INSET DOOR

PRODUCT FEATURES:

- High-output, high-CRI LED lamp sources for accurate color rendition and lighting performance
- Diffused high-efficiency lens for reduced glare
- Recessed ceiling mount; grid or flange - 1'×4', 2'×2', 2'×4'
- Suitable for universal installation into 1.0" and 1.5" grid or flange (drywall) ceilings
- One piece inset doorframe, secured to housing with aircraft cables

1'×4' 2'×2' 2'×4'

SPECIFICATIONS

HOUSING: Standard 24-gauge (optional 20-gauge) cold rolled steel, hole-free, one-piece, seam-welded construction.18-gauge housing flange with mitered and welded corners. White TGIC polyester powder coat finish – 5-step pre-treatment. Salt spray test: 1,000 hours; Reflectance: 92%.

DOORFRAME: 18-gauge CRS. One-piece inset-style construction with welded corners. Gloss white TGIC polyester powder coat finish with 5-stage pre-treatment. Doorframe secured to housing with stainless steel aircraft cables and captive, flush-mounted Phillips-head fasteners. Closed-cell silicone gasket seals doorframe to housing.

OPTICS: Symmetric optic includes diffused, impact-resistant acrylic lens.

ELECTRICAL: Available 3000K, 3500K, 4000K and 5000K color temperatures with maximum 3-step MacAdam variation allowance. 120-277VAC and 347VAC, 50/60Hz electrical input with serviceable high power factor electronic, constant-current driver (<20% THD, >0.95 PF). Standard 0-10V dimming with 1-100% range with dim to dark capabilities (non dim-to-dark with 347V; 660µA maximum source current). Optional 0-10V dimming with 0.1-100% range and dim-to-dark capabilities via eldoLED SOLOdrive series driver (n/a 347V input; ≤0.5V required from dimming control for dim-to-dark operation; 800µA max. source current).

SENSOR & CONTROLS: Optional sensor available with compatible third party controls. To see the full list of compatible controls, click here.

INSTALLATION: Non-IC recessed ceiling mounting into grid and flange application types. Flange installation utilizes inclu 1" and 1.5" T-bar ceilings. Universal installation into grid or flange (drywall) ceiling applications. See Options for continuo

PHOTOMETRICS: Photometry tested to the IESNA LM-79-08 standard. For additional photometric data, please go to ww

WARRANTY: Limited five (5) year LED warranty.

LISTINGS: Luminaire is certified to UL standards by Intertek Testing Laboratories for Wet Location. Certified IP65 per IEC labs rated BSL 1 and 2. Meets FED-STD-209E/Class 1 (ISO 3) Cleanrooms. Suitable for EU GMP Grade A cleanrooms. Suita otherwise noted. CSEDI24 is participating in Declare.

Contractor shall coordinate with manufacturer to provide "SP=ELV Dimming Driver", for use with existing line voltage dimming wiring.

LED | ETL | IP65 | NSF | ISO 3 Class 1 | CCEA Approved | BSL 1-2 | Declare.

ORDERING INFORMATION (Ex: CSEDI-24-67L-40K8-DIM1-DV-2F-4H-SYM)

Model	Size	Lamp Power	Lamp Color	Driver	Voltage	Doorframe	Housing	Optics	Options	Accessories
CSEDI								SYM		

Size
- **14** 1'×4'
- **22** 2'×2'
- **24** 2'×4'

Lamp Power

1'×4'
- **45L** 45 Watt LED
- **67L** 67 Watt LED
- **90L** 90 Watt LED

2'×2'
- **45LD** 45 Watt Dual-Row LED
- **67L** 67 Watt LED
- **90L** 90 Watt LED

2'×4'
- **45LD** 45 Watt Dual-Row LED
- **67L** 67 Watt LED
- **90L** 90 Watt LED
- **135L** 135 Watt LED
- **180L** 180 Watt LED

Lamp Color
- **30K8** 3000K / 82 CRI min.
- **35K8** 3500K / 82 CRI min.
- **40K8** 4000K / 82 CRI min.
- **50K8** 5000K / 82 CRI min.

Driver Type
- ~~**DIM1** 0-10V Dimming to 1%~~
- **DIM01** 0-10V Dimming to 0.1% (n/a with 347V)

Voltage
- **DV** 120-277VAC, 50/60Hz
- **120** 120VAC
- **277** 277VAC
- **347** 347VAC

Doorframe Options
- **5F** 20-Ga Type 304 SS Brushed
- **2F** 18-Ga CRS (STD)
- **AF** Anodized Aluminum
- **PAF** Painted Fabricated Aluminum

Housing Options
- **4H** 24-Ga CRS (STD)
- **2H** 20-Ga CRS
- **5H** 20-Ga Type 304 SS
- **PAH** .050" Painted Aluminum

Optics
- **SYM** Symmetric, Diffused DR Acrylic

Options
- **LEL‡** 8.4W Emergency Battery Pack
- **20KV** 20KV/KA Surge Protection per IEEE/ANSI C62.41.2 Cat. A
- **AMF▲** Antimicrobial Finish
- **FS** Fuse & Holder
- **HJ** Sealed Wireway
- **MS** Motion Sensor (n/a with 347 Voltage Option)
- **RF•** Radio Frequency Filter
- **RM†** Continuous Row Mounting
- **2C** Two Circuit Wiring (1'x4'-45L single circuit operation will yield uneven lens luminance)

Accessories
- **IF*†** Install Frame

* Add
† Onl ceil
• Volt
‡ n/a sele spe ope
▲ App (not available on stainless steel doorframes)

Contractor shall coordinate with manufacturer to provide LEL - Emergency battery pack option for emergency fixtures in place of remote mounted inverter.

Click HERE for CSEDI 'Fast Track' Ordering Options

Ships in 5 days

www.kenall.com | P: 800-4-Kenall | F: 262-891-9700 | 10200 55th Street Kenosha, Wisconsin 53144, USA

A brand of legrand

This product is able to comply with the latest domestic preference legislation, such as the Buy American Act (BAA), Trade Agreement Ace (TAA), Build America, Buy America Act (BABA), and others. It may be covered by patents found at www.kenall.com/patents.Content of specification sheets is subject to change; please consult www.kenall.com for current product details. ©2024 Kenall Mfg.Co.

CSEDI_14_22_24-061622

For additional photometry, go to www.kenall.com

SIMPLESEAL™

CSEDI SERIES – TECHNICAL DATA

PERFORMANCE

Model	Lamp Type	Initial Delivered Lumens @ 25°C	Efficacy (lm/W)	Input Power (W)	Drive Current (mA)	Estd. L70 LED Life (Hrs)
CSEDI14	45L-30K8	5,241	107	49	100	80,000
	45L-35K8	5,403	110			
	45L-40K8	5,587	114			
	45L-50K8	5,810	119			
	67L-30K8	8,028	112	72	75	80,000
	67L-35K8	8,277	115			
	67L-40K8	8,559	119			
	67L-50K8	8,901	124			
	90L-30K8	10,243	105	98	100	60,000
	90L-35K8	10,560	108			
	90L-40K8	10,920	111			
	90L-50K8	11,357	116			
CSEDI22	45LD-30K8	5,069	103	49	100	80,000
	45LD-35K8	5,226	107			
	45LD-40K8	5,404	110			
	45LD-50K8	5,620	115			
	67L-30K8	7,765	108	72	75	80,000
	67L-35K8	8,005	111			
	67L-40K8	8,278	115			
	67L-50K8	8,609	120			
	90L-30K8	9,978	102	98	100	60,000
	90L-35K8	10,286	105			
	90L-40K8	10,637	109			
	90L-50K8	11,062	113			
CSEDI24	45LD-30K8	5,851	127	46	50	100,000
	45LD-35K8	6,238	136			
	45LD-40K8	6,347	138			
	45LD-50K8	6,601	143			
	67L-30K8	8,139	113	72	75	80,000
	67L-35K8	8,677	121			
	67L-40K8	8,828	123			
	67L-50K8	9,181	128			
	90L-30K8	10,641	109	98	100	60,000
	90L-35K8	10,970	112			
	90L-40K8	11,344	116			
	90L-50K8	11,798	120			
	135L-30K8	15,084	103	147	100	60,000
	135L-35K8	15,550	106			
	135L-40K8	16,081	109			
	135L-50K8	16,724	114			
	180L-30K8	20,568	105	196	100	60,000
	180L-35K8	21,203	108			
	180L-40K8	21,927	112			
	180L-50K8	22,804	116			

Displayed information is for selected luminaires only. Additional wattages and color temperatures are also available.
Visit www.kenall.com for additional information.

www.kenall.com | P: 800-4-Kenall | F: 262-891-9700 | 10200 55th Street Kenosha, Wisconsin 53144, USA
A brand of legrand

This product is able to comply with the latest domestic preference legislation, such as the Buy American Act (BAA), Trade Agreement Ace (TAA), Build America, Buy America Act (BABA), and others. It may be covered by patents found at www.kenall.com/patents.Content of specification sheets is subject to change; please consult www.kenall.com for current product details. ©2024 Kenall Mfg.Co.

CSEDI_14_22_24-061622

Job Name : Soledad Community Center Gym
Manufacturer : KENALL
Model Number : CSEDI-22-90L-35K8-DIM1-120-2F-4H-SYM

Type : **AE**

SIMPLESEAL™

CSEDI SERIES – TECHNICAL DATA

PERFORMANCE

Model: CSEDI-14-67L-40K8-DIM1-DV-2F-2H-SYM

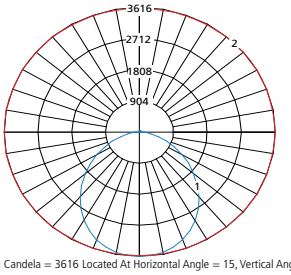

Maximum Candela = 3616 Located At Horizontal Angle = 15, Vertical Angle = 5

1 - Vertical Plane Through Horizontal Angles (15-195) (Through Max. Cd.)
2 - Horizontal Cone Through Vertical Angle (5) (Through Max. Cd.)

Model: CSEDI-22-90L-40K8-DIM1-DV-2F-2H-SYM

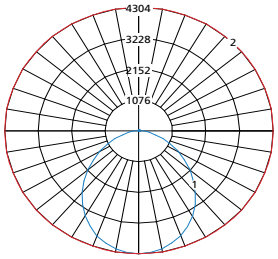

Max Candela = 4304 Located At Horizontal Angle = 0, Vertical Angle = 0

1 - Vertical Plane Through Horizontal Angles (0 - 180) (Through Max. Cd.)
2 - Horizontal Cone Through Vertical Angle (0) (Through Max. Cd.)

Model: CSEDI-24-180L-40K8-DIM1-DV-2F-2H-SYM

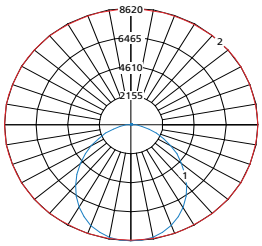

Max Candela = 8620 Located At Horizontal Angle = 0, Vertical Angle = 5

1 - Vertical Plane Through Horizontal Angles (0 - 180) (Through Max. Cd.)
2 - Horizontal Cone Through Vertical Angle (5) (Through Max. Cd.)

DIMENSIONAL DATA

GASKET PROFILE

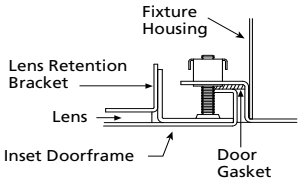

CROSS SECTION

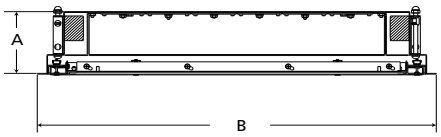

CEILING CUTOUT

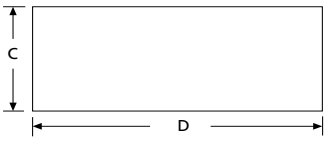

DIMENSIONAL DATA (IN INCHES & CENTIMETERS)

	A	B	C	D
12×48	4.20	11.75 × 47.75	10.85	46.85
30.48cm×121.92cm	10.67	29.85 × 121.29	27.56	119.00
24×24	4.20	23.75 × 23.75	22.85	22.85
60.96cm×60.96cm	10.67	60.33 × 60.33	58.04	58.04
24×48	4.20	23.75 × 47.75	22.85	46.85
60.96cm×121.92cm	10.67	60.33 × 121.29	58.04	119.00

* Add .375" (.95cm) to ceiling cut out dimensions when IF Option is specified

** Height is 5.875" (15 cm) with 135L lamp option when ordered in conjunction with LEL option.

www.kenall.com | P: 800-4-Kenall | F: 262-891-9700 | 10200 55th Street Kenosha, Wisconsin 53144, USA
A brand of legrand
This product is able to comply with the latest domestic preference legislation, such as the Buy American Act (BAA), Trade Agreement Ace (TAA), Build America, Buy America Act (BABA), and others. It may be covered by patents found at www.kenall.com/patents.Content of specification sheets is subject to change; please consult www.kenall.com for current product details. ©2024 Kenall Mfg.Co.

CSEDI_14_22_24-061622

Job Name : Soledad Community Center Gym
Manufacturer : DUAL LITE
Model Number : LES-??-??-R-??-WE

Type : E

DUAL LITE®

LES Series

SURFACE-MOUNT EDGE-LIT LED EXIT SIGN

See attached substitute exit sign with bug eye lighting.

DATE:	LOCATION:
TYPE:	PROJECT:
CATALOG #:	

FEATURES

- Easy to install
- AC and Emergency operation
- Long-life LED lamps
- Ceiling, wall or end mounted models for surface installations
- Extruded aluminum construction
- Available in six color finishes: white, black, satin aluminum, satin brass, chrome, and dark bronze
- Molded acrylic plaque
- Clear acrylic plaque standard
- Optional: White plaque background
- Optional: Mirror plaque background
- Optional: Special Wording
- Temperature Range: 20°C - 30°C (68°F - 86°F)
- UL 924 Listed
- NFPA 101 (Life Safety Code)
- NFPA 70 (National Electrical Code)

Ceiling Mount

Ceiling Mount Emergency

Wall Mount

Wall Mount Emergency

End Mount

End Mount Emergency

UL924 | CEC T20 COMPLIANT | NFPA 70 | NFPA 101 | SPECTRON® Self-Testing/Self-Diagnostic Electronic System

SERVICE PROGRAMS

QS10

SPECIFICATIONS

APPLICATION

- The LES Series provides bright, even letter illumination in an energy-saving LED edge-lit exit sign configuration
- AC or Emergency operation with optional Spectron® Self-test/self-diagnostic circuitry
- Special Wording ("SW") option allows customizing the stencil field to convey important information

CONSTRUCTION

- Water-clear injection-molded acrylic EXIT plaque is available with clear, white or mirror backgrounds
- High strength extruded aluminum trim available in six finishes
- Exit face design in single or double face with red or green letters
- Custom printed directional chevron arrows
- Standard EXIT stencil with 6" letters and ¾" stroke

INSTALLATION

- Mounts to standard electrical boxes up to 4" square via universal adapter plate and mounting canopy assembly
- All mounting hardware is fully concealed

ILLUMINATION

- Exit face illumination is provided by energy saving, long life red or green LEDs
- Exceeds UL 924 requirements for brightness and uniformity

COMPLIANCES

- UL 924 Listed
- NFPA 70
- NFPA 101
- CEC T20 Compliant

WARRANTY

- 5 year warranty
- Battery: 2 years full, 8 years pro-rata

KEY DATA	
Wattage Range	2.2 - 5.0W
Reported Life (Hours)	60,000
Input Current Range	120/277VAC, 60 Hz

Current

currentlighting.com/dual-lite

© 2022 HLI Solutions, Inc. All rights reserved. Information and specifications subject to change without notice. All values are design or typical values when measured under laboratory conditions.

DUAL LITE®

LES Series

SURFACE-MOUNT EDGE-LIT LED EXIT SIGN

DATE: | LOCATION:
TYPE: | PROJECT:
CATALOG #:

Gray Shading = Service Program Limit of 50 Luminaries

QS10

ORDERING GUIDE

Example: LESWDRDNA-W

CATALOG # _____

LES								–	
Model	**Mounting**	**Faces**	**Letter Color**	**Directional Arrows**	**Finish**	**Operation**	**Self-Diagnostic**		**Options**
LES Edge-lit Exit	**C** Ceiling Mount **W** Wall Mount **E** End Mount **ADVISE**	**S** Single **D** Double* *Not for use with wall mounted models **ADVISE**	**R** Red **G** Green	**X** No Arrows EXIT **R** Right Arrow* EXIT>
L Left Arrow* <EXIT **D** Double Arrows <EXIT>
C L/R Arrows** <Exit/Exit>
* Not for use with double face models. Use "C" L/R arrow designator
** Double face models only. Provides reversible right or left arrow indicator
ADVISE	**N** Satin Aluminum **W** White **C** Chrome [1] **B** Black **S** Satin Brass **Z** Dark Bronze For White (W) and Satin Aluminum (N) finishes, the canopy color is White. For all other finishes, the canopy is Black	**A** AC Only **E** Emergency	**Blank** None **I** Spectron® self-testing/ self-diagnostic electronics [2]		**SW** See available special wording choices on page 4 [3,4] **W** White plaque background **M** Mirror-plaque background [5]

Notes:
1 Chrome available only with AC Only Operation (A).
2 For use with emergency models only
3 Specify special wording code from page 3 when ordering. Example: SW41
4 Some special wording signs not available with directional arrows.
5 Double face models standard with mirror background without selecting "M". For optional white background, select "W".

ELECTRONICS

Available with AC, emergency and Spectron® self-test/self-diagnostic electronics option. Emergency and self-diagnostic models equipped with isolation transformer and fully automatic constant current solid state charger with sealed maintenance-free nickel-cadmium battery. All emergency models with 90-minute run-time. All components mounted inside housing. Includes test switch and AC-on indicator. Transient/surge protection, low voltage disconnect and AC lock-out features included. Battery recharge within UL time standards. Includes pre-stripped AC input pigtail leads.

Power Factor, Average: .8 (lagging)
Battery Type: Maintenance-free sealed nickel cadmium battery
AC Input: 120/277VAC, 60 Hz.
Operating Temperature Range: 20°C to 30°C (68°F to 86°F)
Weight: 3.6 lbs (1.6 kg) (AC Only model)

POWER CONSUMPTION (120/277VAC)

Model	Single Face	Double Face
Red AC Only	2.2 watts	3.4 watts
Green AC Only	2.5 watts	4.0 watts
Red Emergency	3.3 watts	4.5 watts
Green Emergency	3.6 watts	5.0 watts

* Wattage figures include LED lamps, transformer and electronics power requirements.

© 2022 HLI Solutions, Inc. All rights reserved. Information and specifications subject to change without notice. All values are design or typical values when measured under laboratory conditions.

Job Name : Soledad Community Center Gym
Manufacturer : DUAL LITE
Model Number : LES-??-??-R-??-WE

Type : E

LES Series

SURFACE-MOUNT EDGE-LIT LED EXIT SIGN

DIMENSIONS

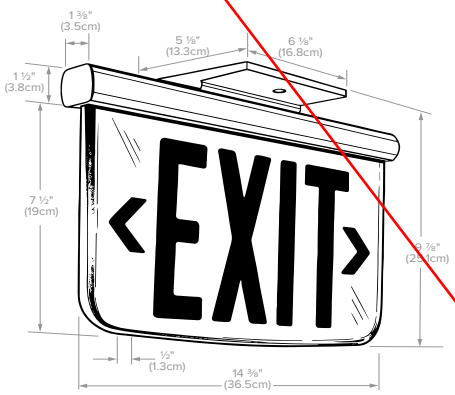

Ceiling Mount

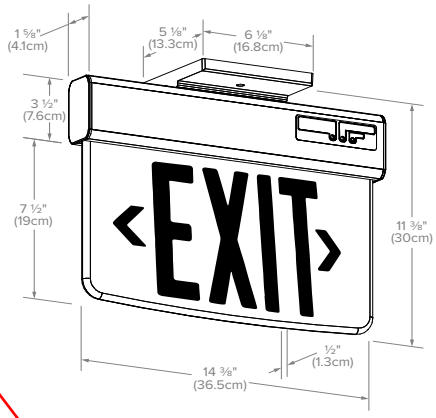

Emergency Ceiling Mount

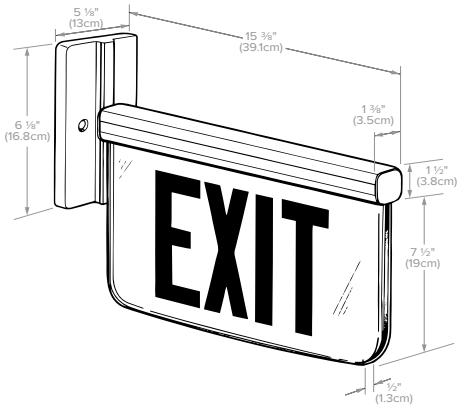

End Mount

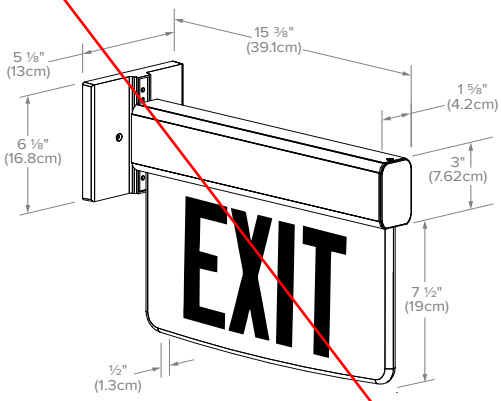

Emergency End Mount

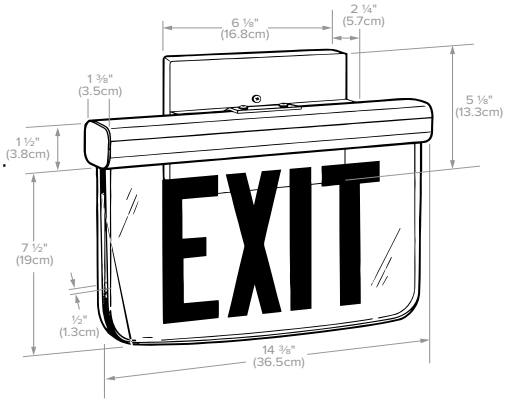

Wall Mount

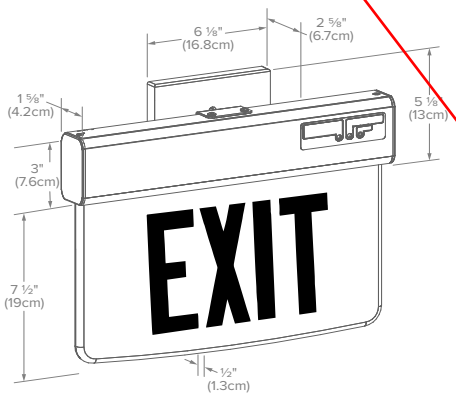

Emergency Wall Mount

© 2022 HLI Solutions, Inc. All rights reserved. Information and specifications subject to change without notice. All values are design or typical values when measured under laboratory conditions.

LES Series

SURFACE-MOUNT EDGE-LIT LED EXIT SIGN

SPECIAL WORDING

LES Series architectural surface-mounted LED edge-lit exit signs feature an option for standard or custom special-wording. The images below represent standard special-worded signs available for the LES Series. The artwork and silk-screening for the standard signs shown below were previously developed therefore pricing for these special-worded signs do not incur a setup charge.

If your special-worded requirements do not appear on this page, please contact the factory to request your custom special-wording sign. Custom special wording signs incur a one time set-up charge for each development.

STANDARD SPECIAL WORDING SIGNS WITH DIRECTIONAL ARROWS

SW118

SW41 (Arabic/Exit)

SW13

SW10

SW69

SW11

STANDARD SPECIAL WORDING SIGNS WITHOUT DIRECTIONAL ARROWS

SW4

SW3

SW31

SW2

STANDARD SPECIAL WORDING SIGNS

Category	Special Wording Number		Description
EXIT	SW	2	NOT AN EXIT
	SW	142	EXIT (TEXT IS INVERTED)
	SW	144	EXIT (W/ WHEELCHAIR SYMBOL)
DO NOT ENTER	SW	3	IN USE
EVACUATION	SW	10	AREA OF REFUGE
	SW	11	AREA OF REFUGE WITH WHEELCHAIR SYMBOL
	SW	13	AREA OF RESCUE ASSISTANCE WITH WHEELCHAIR SYMBOL
	SW	48	STAIRS
	SW	117	TO AREA/OF REFUGE
	SW	149	AREA OF RESCUE
LABORATORY	SW	4	X-RAY IN USE
	SW	21	BEAM ON
	SW	28	MRI IN USE
	SW	31	LASER IN USE
	SW	62	RADIATION IN USE
	SW	57	CT IN USE
	SW	166	TESTING IN PROGRESS
RESTROOM/ FACILITIES	SW	30	ROOM IN USE
	SW	118	HANDICAPPED (SYMBOL ONLY)
	SW	167	RESTROOM OCCUPIED
	SW	168	ELEVATOR
	SW	169	MEN (NO ARROWS/CHEVRONS)
	SW	170	WOMEN (NO ARROWS/CHEVRONS)
INTERNATIONAL EXITS	SW	41	ARABIC/ EXIT
	SW	69	SALIDA
	SW	165	SALIDA (INVERTED TEXT)
AREA/ALERTS	SW	9	ON AIR
	SW	178	EMERGENCY CALL STATION

NOTE: Special worded signs do not meet letter size requirements of UL 924.

Special Wording Option example

© 2022 HLI Solutions, Inc. All rights reserved. Information and specifications subject to change without notice. All values are design or typical values when measured under laboratory conditions.

DUAL LITE®

EVCHL Series

HIGH LUMEN COMBINATION EXIT/EMERGENCY LIGHT

DATE:	LOCATION:
TYPE:	PROJECT:
CATALOG #:	

EV FAMILY

FEATURES

- High lumen output exit and emergency light for wall, ceiling or end mounting commercial applications
- Self-Test/Self-Diagnostics are standard
- Impact resistant, flame rated and UV stable white or black thermoplastic housing
- Full lumen output over 90 minutes of battery discharge
- Long-life Lithium Iron Phosphate battery
- Models available without lamp heads to support remote lamp heads

UL924 NFPA 70 NFPA 101 SPECTRON Self-Testing/Self-Diagnostic Electronics System TITLE 20

Provide and install exit sign with emergency bug eye lights and wire guard option.

SPECIFICATIONS

APPLICATION

- The EVCHL Series is a high lumen output combination exit and emergency light designed to provide 90 minutes of illumination when primary power is lost
- Apply in large open spaces or higher mounting height applications where high lumen output is required
- Fully adjustable LED lamp heads
- No-head models provide 12 watts to run multiple remotes
- Damp Location Listed for basements or stairwells

CONSTRUCTION

- The EVCHL Series has a flame-rated, UV stable thermoplastic housing with a lightly textured white or black finish
- Includes additional faceplate for single or double-face application
- Lamp heads include die-cast heat dissipating heatsink with impact and scratch resistant UV stabilized thermoplastic
- LED lens are made of acrylic
- Snap-in directional chevrons are field selectable

INSTALLATION

- Backplate includes a Universal mounting template for wall mounting to outlet box
- Ceiling and end mounting uses the supplied canopy to standard 3-½" or 4" square or octagonal electrical boxes
- End mount option allows both lamp heads to be installed on one side
- Exit housing snaps to canopy

ILLUMINATION

- The EVCHL is designed for full lumen output across the entire 90 minutes of emergency operation
- Lamp heads are fully adjustable
- Exit illumination is provided by colored diffuser and matching green or red LEDs

COMPLIANCES

- Listed to UL924 Standard, NFPA 101, NFPA 70
- Damp Location Listed Optional
- CEC T20 Compliant

WARRANTY

- LED Lifetime Warranty
- Full 5 year warranty
- LED Lifetime Warranty on Emergency Unit

KEY DATA	
Lamp Color	Cool White, 5000K
Total Lamp Output	6W Lamps, 589 lumens per lamp head, 1178 lumens total
Number of Lamps	2 lamp heads with 3 high-power LEDs per head
System Efficacy	98.16 lm/W
Rated Lifecycle	> 100,000hrs or 10 years
Input Voltage	120 or 277VAC, 50 or 60 Hz

© 2022 HLI Solutions, Inc. All rights reserved. Information and specifications subject to change without notice. All values are design or typical values when measured under laboratory conditions.

DUAL LITE®

EVCHL Series

HIGH LUMEN COMBINATION EXIT/EMERGENCY LIGHT

DATE:	LOCATION:
TYPE:	PROJECT:
CATALOG #:	

ORDERING GUIDE

Example: EVHCLURW12-06L

CATALOG #

EVCHL	U			12	–	
Model	**Faces**	**Letter Color**	**Finish**	**Capacity**		**Options**
EVCHL High Lumen Combination Exit/ Emergency Light	**U** Universal Single/ Double Face	**R** Red **G** Green	**W** White **B** Black	**12** 12 Watts		**0** No Lamp-Heads [1] **06L** 6 Watt Lamps

Accessories

☐ **EVHCR2** Indoor Remote

☐ **EVODW** Outdoor Remote

☐ **WGTW** Wire Guard
16" H x 20" L x 7⅞" D

Notes:

1 The no-head option(-0) will run 2 each EVHCR2 Indoor remotes, or 4 each EVO double head Outdoor remotes for 90 minutes

ELECTRONICS

Upon failure of the normal utility power, an LED driver is automatically activated to power the emergency LED lamp-heads and EXIT LED's. Upon resumption of normal utility power, the LED driver is turned off, and the battery is recharged through a micro-controller based 3-stage charger. The battery is a maintenance-free Lithium Iron Phosphate (LiFePO) type. The EVCHL Series accepts dual-voltage input of 120 or 277VAC at 50 or 60 Hz. A low voltage battery disconnect (LVD) feature protects the battery from severe damage during prolonged power failures. Manual testing is available at any time using the push-to-test button.

STANDARD FEATURES INCLUDE

- External push-to-test switch and AC-on indicator
- Battery re-charge within 24 hours
- AC Lock-out circuit
- Low voltage battery disconnect

SPECTRON FEATURES

- Self-diagnostics monitors LED status, LED load transfer circuit, battery capacity and charger function and displays any fault detection by means of a flashing code
- Self-Test feature automatically runs a 1 minute test once a month and an alternating 30 or 60 minute test once every 6 months. Multi-color LED indicator provides visible fault detection and charging status
- User initiated 1 or 90-minute system test feature
- 15 minute re-transfer delay
- Automatic unit transfer in brown-out conditions (below 80% of nominal AC input voltage)

MAXIMUM POWER CONSUMPTION

	AC Voltage	Hz.	Amps.	Watts	Power Factor
EVHCL	120	60	0.11	6.5	0.5
	277	60	0.14	7.2	0.2

© 2022 HLI Solutions, Inc. All rights reserved. Information and specifications subject to change without notice. All values are design or typical values when measured under laboratory conditions.

DATE: | LOCATION:

TYPE: | PROJECT:

CATALOG #:

EVCHL Series

HIGH LUMEN COMBINATION EXIT/EMERGENCY LIGHT

DIMENSIONS

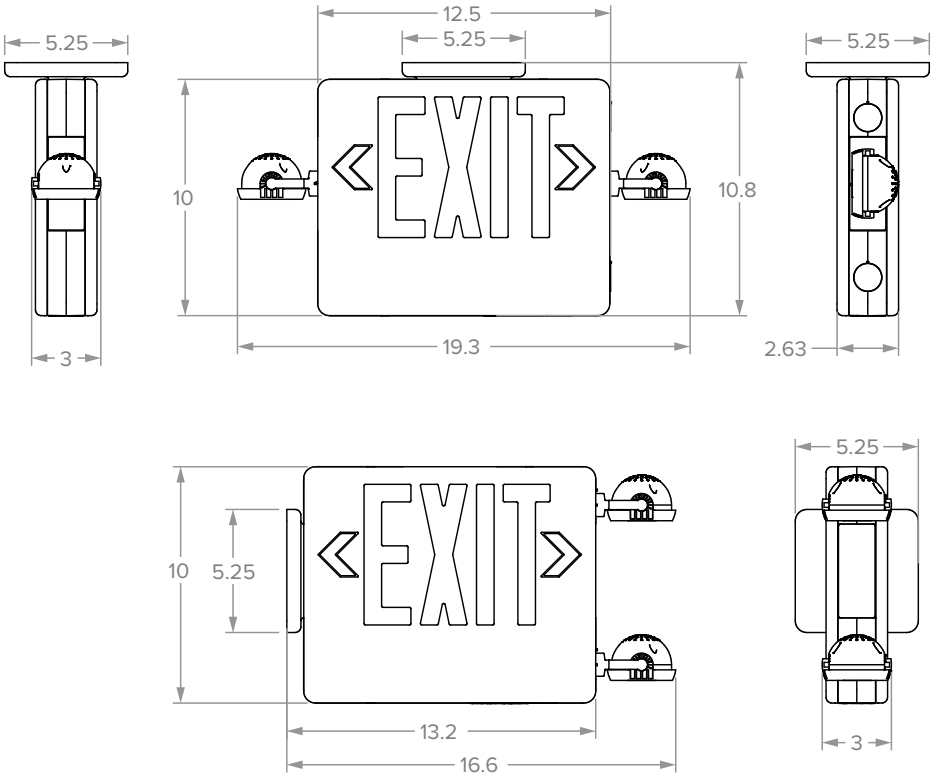

APPLICATION INFORMATION

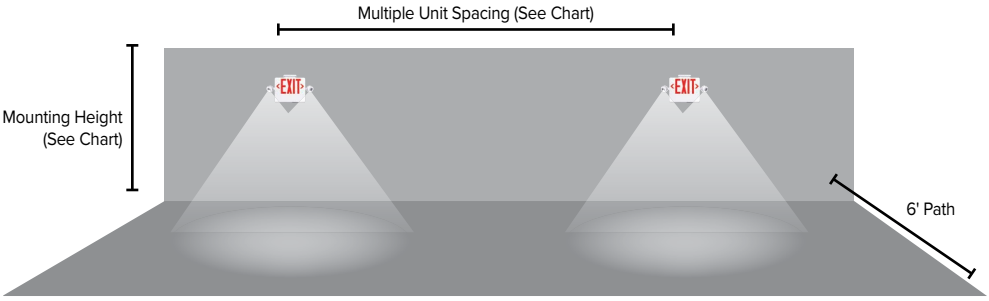

Single Unit Coverage (See Chart)

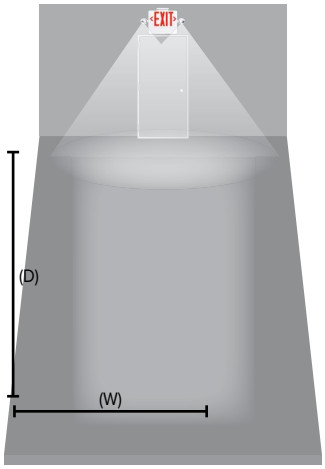

*Multiple unit spacing based on 6' path

Industrial Parameters Ceiling Height=30', Reflectance=10/10/10, Ceiling Mount Multiple Unit Spacing, 6'Path

EVCHL, 696 lumens, 10 watts		
Mounting Height	7.5'	9'
Mult. Unit Spacing @1 FC Avg	85'	85'
Mult. Unit Spacing @1 FC Min	27'	29'

1 fc Average		1 fc Minimum	
Depth (D)	Width (W)	Depth (D)	Width (W)
25'	10'	3	10'

Meets Life Safety Code minimum illuminance of 0.1 fc and average illuminance of 1.0 fc. Assumes open space with no obstructions, mounting height of 7.5', ceiling height of 9' and reflectances of 80/50/20. Photometry files available on the Dual-Lite website.

© 2022 HLI Solutions, Inc. All rights reserved. Information and specifications subject to change without notice. All values are design or typical values when measured under laboratory conditions.

Job Name : Soledad Community Center Gym
Manufacturer : BODINE
Model Number : ELIS250I2UO30ADI2 - (ELI-S-250)

Type : INV

bodine

Emergency Backup

Inverter

ELI-S-250

Project:
Location:
Cat.No:
Type:
Qty:
Notes:

Sinusoidal (Sine Wave) Output
250 VA Output Power Maximum
Automatic Output Voltage Select
Automatic Dimming (0 to 10V) of Connected Load (maximum 800 W*)

Product order number:
ELIS250I2UO30ADI2

12 NC number:
913702485501

See markup on page 7 for providing in-fixture emergency battery pack.

Specifications

UL Listed for US and Canada
Listed to UL924 and tested to CSA 22.2, No. 141
For Field Installation (Indoor and Damp)

Maximum Output Power
250 VA

Maximum Connected Load Power
800 W*

Illumination Time
90 Minutes

AC Input Voltage
120 VAC, 60 Hz or 277 VAC, 60 Hz

AC Input Current, (battery charging)
1000 mA Max, 120Vac or
360 mA Max, 277Vac

Battery: 2 ea. required
12V (nominal), 35Ah
Maintenance-Free Sealed Lead Acid Battery

Recharge Time
24 Hours

Charging Indicator Light / Test Switch
Integrated LED Test Switch

Output Voltage, Automatically Selected
120 VAC +/- 10%, or 277 VAC +/- 10%

Output Frequency
60 Hz, ± 5%

Transfer Time
2 to 5 seconds

Temperature Rating (Ambient)
68° F to 86° F (20° C to 30° C)

Dimensions
12.0" H x 12.5" W x 10.0" D
(317mm x 305mm x 254mm)

Weight
Enclosure and Electronics only: 16 lbs. (7.26 Kg)
Batteries: 23.15 lbs. ea. (10.5 kg)
Batteries total: 46.3 lbs. (21 kg)

Warranty
Electronics: 5 years full
Battery: 3 years full, 7 years pro rata

Benefits

- Automatic output voltage select
- Automatic dimming (0 to 10V) of connected load
- Automatic code-compliant testing (Self-testing)
- Automatic load monitoring after commissioning (new UL 924 requirement)
- Meets CEC Title 20 (California Energy Commission) efficiency standards.
- Works with LED and fluorescent fixtures
- Ideal for (but not limited to) screw-base LED lamps
- Compatible with AC (line voltage) driven TLED lamps
- Remote-mounting up to 1,000 feet maximum
- 2-hour emergency run-time version available

Dimensions

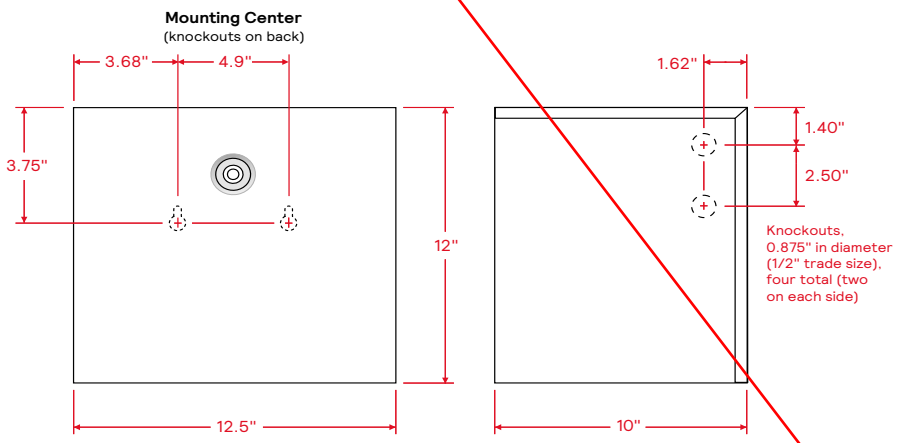

* Note: A total connected load of 800W is only possible with very specific loads that have been tested at the factory.
Other loads rated at this maximum power level may be possible, but they should be pre-tested at the factory or by the local electrical shop before specification or field installation.

ELI-S-250

Sinusoidal dimmable emergency backup inverter

Application

The Bodine ELI-S-250 Emergency Lighting Inverter works in conjunction with fluorescent, LED, or incandescent fixtures to create an emergency lighting system. The ELI-S-250 operates at a maximum output power of 250 VA. It allows the connected fixture(s) to be on, off, switched or dimmed without affecting emergency operation. Each unit consists of two sealed lead acid batteries, charger and electronic circuitry in one steel case. The ELI-S-250 provides power to the input side of the fixture, including the AC ballast/driver, and can be used with indoor or outdoor emergency fixture applications. The ELI-S-250 is NOT suitable for use with HID lighting nor is it rated for outdoor mounting location.

Operation

Upon failure of normal power, the ELI-S-250 begins providing emergency power to the connected lighting load for a minimum of 90 minutes. A low voltage disconnect circuit protects the inverter batteries from damage by deep discharge during prolonged power failures. When normal power is restored, the ELI-S-250 automatically returns to charge mode. The battery capacity is fully restored in 24 hours.

Installation

The ELI-S-250 does not affect normal fixture operation and may be used with a switched or unswitched fixture. It can be installed in close proximity to the fixture or remote from the fixture (using suitable wiring).

Commissioning

The ELI-S-250 requires initial calibration as part of the full product installation in order to accurately monitor the load for changes (new UL 924 requirement). See installation instructions for details.

Dimming

The ELI-S-250 features a dimming control output of 0-10 volts. This dimming capability allows a string of multiple fixtures to be driven in emergency mode at a combined 250 VA maximum. For example, fifteen 40W (input) LED fixtures may be connected to one ELI-S-250 and automatically dimmed for emergency operation to 40% of normal power input, providing each LED fixture with approximately 16W of input power. See diagram below.* The emergency mode output dimming voltage is automatically controlled by the ELI-S-250 electronic circuitry to maintain 250 VA output throughout the emergency event. The ELI-S-250 passes the normal room dimming control voltage (0 to 10V) where used, in the normal (non-emergency) mode so normal dimming operation of the connected fixtures is not affected.

Specification

Emergency lighting shall be provided by using a standard fixture or group of fixtures powered with a Bodine ELI-S-250. Each ELI-S-250 unit consists of two maintenance-free Sealed-Lead-Acid batteries, and electronic battery charging and output generation circuitry contained in one 12.0"H x 12.5"W x 10.0"D metal case. The ELI-S-250 unit shall be capable of powering any combination of dimmable fluorescent and/or LED lighting fixtures rated at a total of 800W input power at 20°C to 30°C for a minimum of 90 minutes by the use of 0 to 10v dimming control, utilized to reduce the input of said luminaires to a total of 250 VA input power during Emergency operation, regardless of local switch or dimmer position. The ELI-S-250 shall allow the connected fixture(s) to be on, off, switched or dimmed without affecting emergency operation. The ELI-S-250 unit shall exceed emergency standards set forth by the current NEC and CEC. It shall be UL Listed for the US and Canada, suitable for damp locations, and warranted for five years from date of manufacturing.

Emergency Illumination

The ELI-S-250 supports 250 VA of emergency power for a minimum of 90 minutes.

Code Compliance

The ELI-S-250 has been tested by Underwriters Laboratories in accordance with the standards set forth in UL 924, "Emergency Lighting and Power Equipment". The ELI-S-250 is UL Listed for field installation. Emergency illumination time exceeds the National Electrical Code (NEC), Life Safety Code (NFPA-LSC), National Building Code of Canada (NBC), National Fire Code of Canada (NFC) and UL 90-minute requirements.

Warranty

The ELI-S-250 is warranted for five (5) years from the date of manufacture. This warranty excludes the batteries, which have a warranty of three (3) years full, seven (7) years pro rata. This warranty covers only properly installed Bodine ELI-S-250 emergency units used under normal conditions. For the warranty period, Bodine Emergency Lighting will, at its option, repair or replace without charge a defective inverter provided it is returned to the factory transportation prepaid on inspection will be conducted to determine if the unit is defective under the terms of the warranty. Repair or replacement, as stated above, shall constitute the purchaser's exclusive warranty, which does not extend to transportation, installation, labor or any other charges; nor does it apply to any equipment of another manufacturer used in conjunction with the inverter.

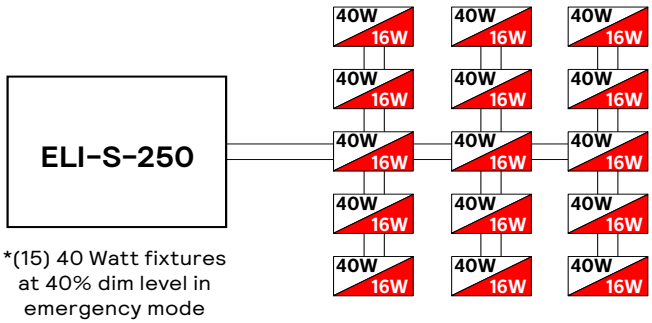

*(15) 40 Watt fixtures at 40% dim level in emergency mode

ELI-S-250

Sinusoidal dimmable emergency backup inverter

Schematic

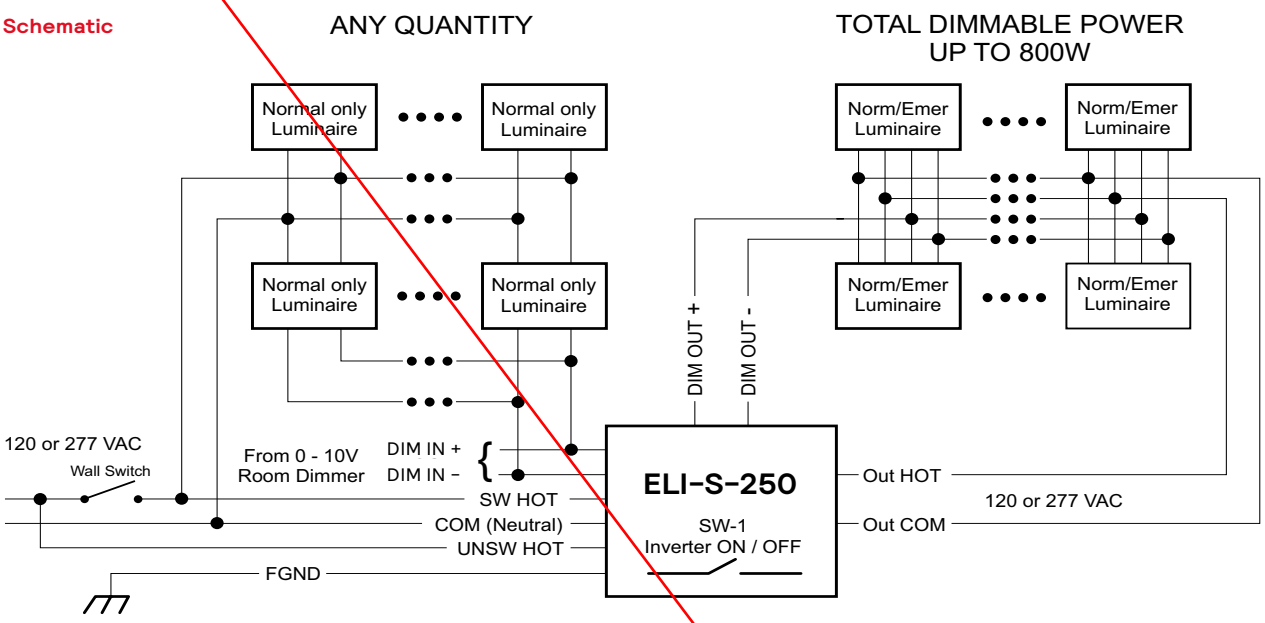

Ordering Guide

example: ELIS250I2UO30ADI2

Product Category	VA	Case	Input Voltage	Temperature		Type/Harness	Packaging	Generation
ELIS	250	I2	U	O	30	AD	I	2
ELIS Emergency Lighting Inverter Sinusoidal	**250**	**I2** (see page 1 for case dimensions)	**U** 120-277V	**O** Min. Temp. 20°C	**30** Max. Case Temp. 30°C	**AD** Automatic Dimming	**I** Individual Pack	**2** Gen 2

signify

© 2023 Signify Holding. All rights reserved. The information provided herein is subject to change, without notice. Signify does not give any representation or warranty as to the accuracy or completeness of the information included herein and shall not be liable for any action in reliance thereon. The information presented in this document is not intended as any commercial offer and does not form part of any quotation or contract, unless otherwise agreed by Signify.

Signify North America Corporation
400 Crossing Blvd, Suite 600
Bridgewater, NJ 08807
Telephone: 855-486-2216

Signify Canada Ltd.
281 Hillmount Road,
Markham, ON, Canada L6C 2S3
Telephone: 800-668-9008

All trademarks are owned by Signify Holding or their respective owners.

Job Name : Soledad Community Center Gym
Manufacturer : WATTSTOPPER
Model Number : LMCP24-10V 115/277-24HD

Type :

See attached Vive Hub Equipment cut sheet for revised time clock and control system requirements.

legrand

WATTSTOPPER®

RELAY PANEL INTERIORS

LMCP SERIES

Dimming panels dim 0-10V lighting loads as well as switch lighting and plug loads

Switching panels switch lighting and plug loads

Runs scheduled and photocell events autonomously

HDR relays include a switch for manual override even when panel is powered off

Compatible with Digital Lighting Management switches, sensors and input devices

Native BACnet communications for network control solutions

Easy setup via LMCT-100-2 handheld configuration tool

99 control groups accessible via handheld configuration tool

RoHS

ASHRAE BACnet®

DESCRIPTION

The LMCP panel series is designed to provide 0-10V dimming and switching for the control of building lighting and plug loads. The panels can be networked together to enable automation through out an entire facility.

Digital lighting management devices such as switches, occupancy sensors, daylight sensors, and other devices connect to the panel to switch loads On or Off via the relay or to dim loads using the 0-10V capability on the dimming panel.

OPERATION

Relays in each LMCP panel can be assigned to up to 99 automation groups in any combination. Each group can respond to unique scheduled events and light/dark photocell operations set up via an LMCT-100-2 handheld configuration tool. A group can also respond to schedules sent from a Network Controller or a BACnet-enabled building automation system (BAS). Individual loads, or groups of loads, can also be controlled by DLM digital switches, dimmers, occupancy sensors, LMLS series daylight sensors, and LMIN-104 input modules. Controls are assigned to relays using Push n' Learn™ directly from the user input device, or via an LMCT-100-2.

NETWORKING

Multiple panels may be networked together for global control operation without the use of a Network Controller or BAS. The LMCP panel also provides a native-BACnet integration solution via BACnet MS/TP. Relay, group, and control device status, including occupancy sensor status, are available as BACnet objects. When a Wattstopper Network Controller is used, it will automatically recognize LMCP panels and map them to the browser-based user interface so that they can be configured with minimal additional setup.

APPLICATIONS

LMCP panels provide effective, code-compliant control of building exterior lighting as well as larger interior areas that are not suited for DLM distributed controls. Recommended applications include office building lobbies, corridors, loading docks, etc., as well as school gymnasiums, commons areas, hallways, any space with a hard cap ceiling, or an open ceiling where view of load controllers is not desired. LMCP panels are also ideal for retrofit scenarios where mounting control equipment near existing branch circuit breakers is beneficial and digital switch and sensor devices and load parameter configurability are required to meet complex operational sequences.

FEATURES

- Standard single pole heavy duty relays UL and cUL listed for both lighting and plug loads
- Available in Dimming or Switching configurations
- Available in interiors sized for 8, 24, or 48 relays maximum
- Runs event-based schedule routines independently (does not require BAS or Network Controller)
- Supports astronomical, time-based, and photocell-based event types
- Two free-topology DLM Category 5e local networks for DLM sensors, switches, and LMIN-104 interface module
- LMCT-100-2 handheld config tool recommended for setup
- Panel can provide accessory power for low voltage network devices such as NB-ROUTER
- BAA/TAA-compliant
- DIN-rail feature used to mount an NB-ROUTER for BACnet IP (LMCP24/48 only)

PROJECT		LOCATION/ TYPE	

DIGITAL LIGHT MANAGEMENT | Lighting Control Panels

SPECIFICATIONS

- Input voltage options, 120/277V, 120/347V, 50/60 Hz
- For 0–10V models:
  - Sinks up to 100 mA per 0-10V input (50 fixtures at 2mA each)
  - 0-10V signal will open on loss of power to panel, or via contact on LMRD-x-10V cards
- Class 2 connection to two independent DLM local networks: 24VDC output, up to 250mA across 2 RJ45 ports per local network
- Free-topology DLM local network segments may include digital switches and sensors; Category 5e cable, up to 1,000 ft. total per local network
- Terminals for connection to DLM segment network (BACnet MS/TP)
- Segment network parameters:
  - Wattstopper LM-MSTP wire
  - Linear topology; 4000 ft. maximum per segment
- Accessory power available:
  - LMCP8, N/A
  - LMCP24, 650 mA @ 15VDC, 400 mA @ 24VDC
  - LMCP48, 650 mA @ 15VDC, 400 mA @ 24VDC
- Weight of interior, including transformer(s): LMCP8, 12lbs; LMCP24, 27 lbs; LMCP48, 35 lbs.
- HDR relays:
  - Coil voltage, 24 VDC, pulse ON and pulse OFF
  - Mechanically latched contacts
  - ½" K.O. mounting, LV plug-connection, individually replaceable
  - UL listed for receptacle circuit control
  - Contact ratings:
    - 30 amps ballast @ 277V
    - 20 amps ballast @ 347V
    - 16 amps e-ballast @ 120V
    - 10 amps e-ballast @ 277V
    - 20 amps tungsten @ 120V
    - 30 amps resistive @ 347V
    - 20 amps receptacle load @ 120V
    - 1.5 HP @ 120V
  - SCCR (short circuit current rating) 14,000 amps with HDR Heavy Duty Relay
- Upon loss of power, date and time info is maintained for 14+ days. Programming info (including schedules) is maintained for the life of the product.
- Operating conditions: for indoor use only; 32–140°F (0-60°C); 5-95% RH, non-condensing
- UL and cUL Listed (E207852), Complementary Listed to Emergency Lighting Equipment UL924
- OSHPD (OSP) Approved (Certification No: OSP-0257)
- Five year warranty

CONNECTING

Sample DLM Panel Connection Diagram with Switching Loads

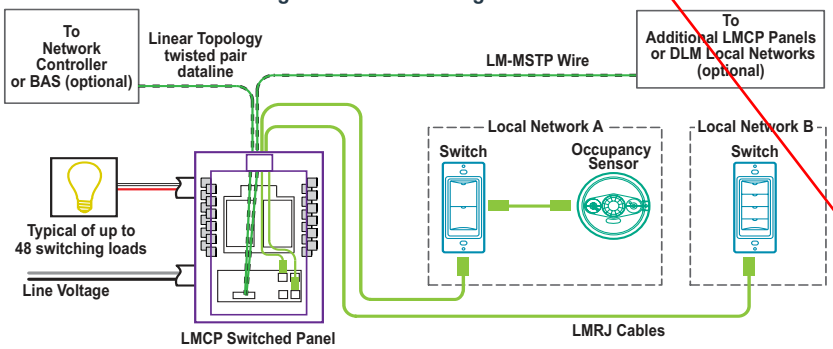

Sample DLM Panel Connection Diagram with 0–10V Dimming Loads

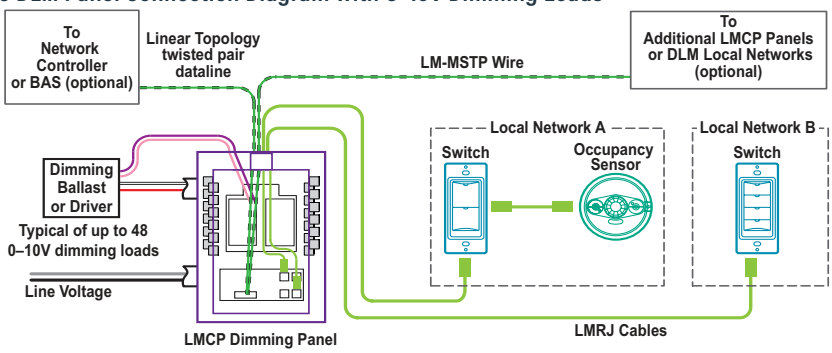

WATTSTOPPER®

legrand

CONNECTING

LMIN-104 Connection and Wiring Diagram

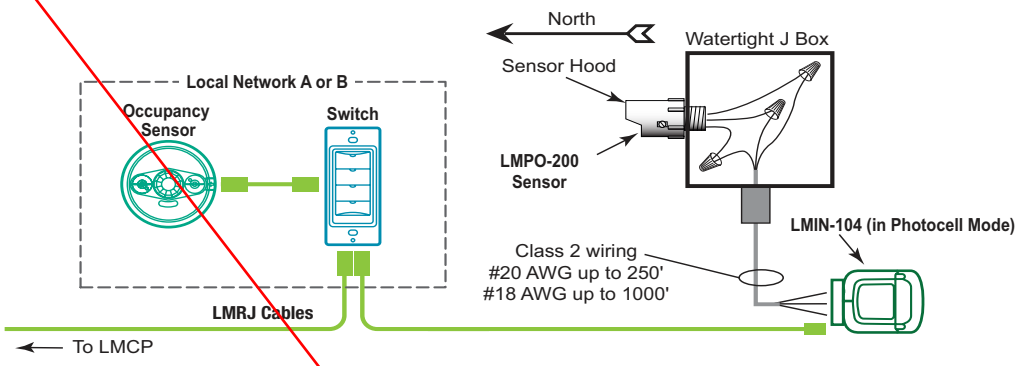

0–10V AND NETWORK WIRING

The Class 2 wire-way at the top of the LMCP panel is designed to provide separation between Class 1 wiring and BACnet/IRB network wiring. All 0–10V wires must originate as Class 2, or be reclassified. The 0–10V are routed through grommets in the top of the Class 1/Class 2 barrier. The BACnet/IRB wires are routed through the wire-way.

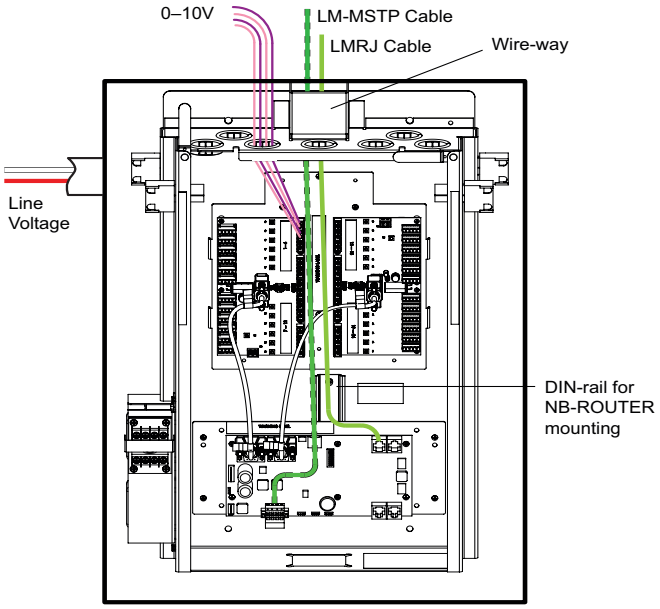

SET UP AND DIAGNOSTICS

LMCP Set Up using LMCT-100-2 Handheld Configuration Tool

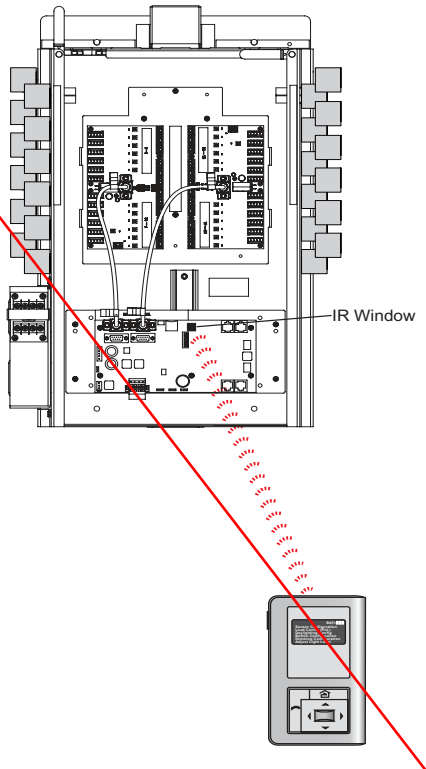

PANEL ENCLOSURE DIMENSIONS

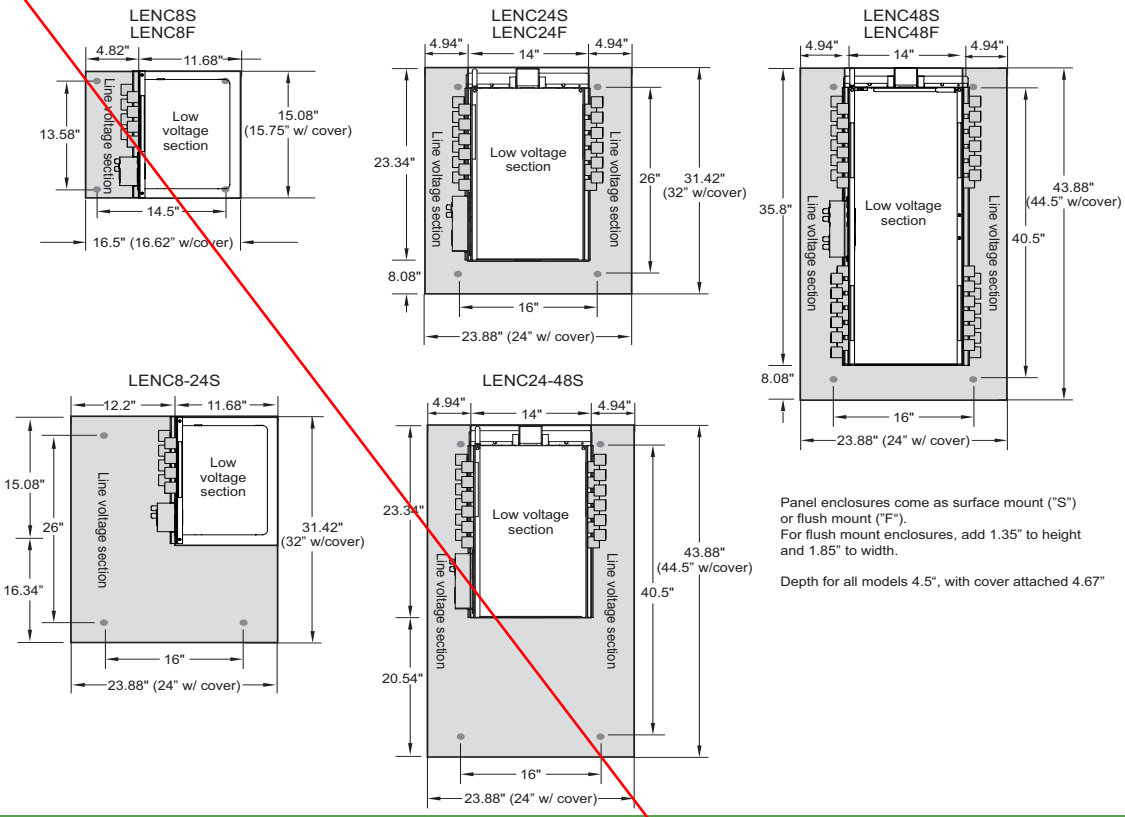

Panel enclosures come as surface mount ("S") or flush mount ("F").
For flush mount enclosures, add 1.35" to height and 1.85" to width.

Depth for all models 4.5", with cover attached 4.67"

ORDERING INFORMATION

Interior Capacity	Installed Options: Voltage Options	Relay Count	Emergency Relays	Coil Voltage
Dimming Panels				
☐ LMCP8-10V	☐ 115/277	___ HDR relays / 0-10V outputs installed (max of interior capacity)	___ EM relay count (Not available in 8-relay size panels; max. of 24 in 24-relay or 48-relay size interior)	☐ 115
☐ LMCP24-10V	☐ 115/347			☐ 240*
☐ LMCP48-10V				☐ 277
				☐ 347
Switching Panels				
☐ LMCP8	☐ 115/277	___ HDR relays installed (max of interior capacity)	___ EM relay count (Not available in 8-relay size panels; max. of 24 in 24-relay or 48-relay size interior)	☐ 115
☐ LMCP24	☐ 115/347			☐ 240*
☐ LMCP48				☐ 277
				☐ 347
☐ LMCT-100-2	Wireless Configuration Tool			

* 240VAC single phase only

Ordering Notes
All LMCPx and LMCPx-10V panels are BAA/TAA Compliant
LMCP panels are compatible with LENC enclosures (order separately)
See EM-IN cut sheet for emergency relay functionality
See Application Note for field mounting NB-ROUTER and accessory cables (order separately)

BACnet® is a registered trademark of ASHRAE.

Pub. No. 27485r7 Rev. 6/2024

Job Name : Soledad Community Center Gym
Manufacturer : WATTSTOPPER
Model Number : LENC24S

Type :

WATTSTOPPER®

legrand

PANEL ENCLOSURES

LENC

16-gauge all steel tubs with galvineal finish

Screw on, powder coated cover permits temporary hanging via key hole screw slots

Surface mounting with back mounting holes, screw cover

Lockable door access to Class 2 panel section, meets NFPA 70

Studs provided for quick installation of panel interior section

UL and cUL listed; five year warranty

DESCRIPTION

LENC panel enclosures are designed specifically to work with all configurations of LMCP panel interiors containing 8 to 48 relays. The enclosures are provided with integral mounting studs that are configured to accept the panel interior making the installation quick and easy. Covers are secured to the tubs with screws and have keyhole style mounting. This allows the cover to be temporarily hung on the tub during the construction phase of the project. All covers have hinged doors that expose only the low voltage (Class 2) section of the panel and are equipped with key locks and two keys each. All LENC enclosures are NEMA 1 rated. Consult factory for other NEMA rated applications.

APPLICATIONS

Enclosures rated for 24 or 48 relay capacity have space provided at the bottom for optional mounting plates (DMP) to accept DIN rail mounted accessories such as multi-pole contactors and ELCU-100 Emergency Lighting Control Units. Standard LENC24 and LENC48 enclosures will accommodate up to six four pole contactors (requires DMP mounting plate) or four ELCU-100 units (requires DMP-1EM mounting plate). LENC8-24 and LENC24-48 enclosures have additional space provided and will accommodate up to twelve four pole contactors (requires DMP-2 mounting plate) or 12 ELCU-100 units (requires DMP-3EM mounting plate).

DIN RAIL MOUNTING OPTIONS

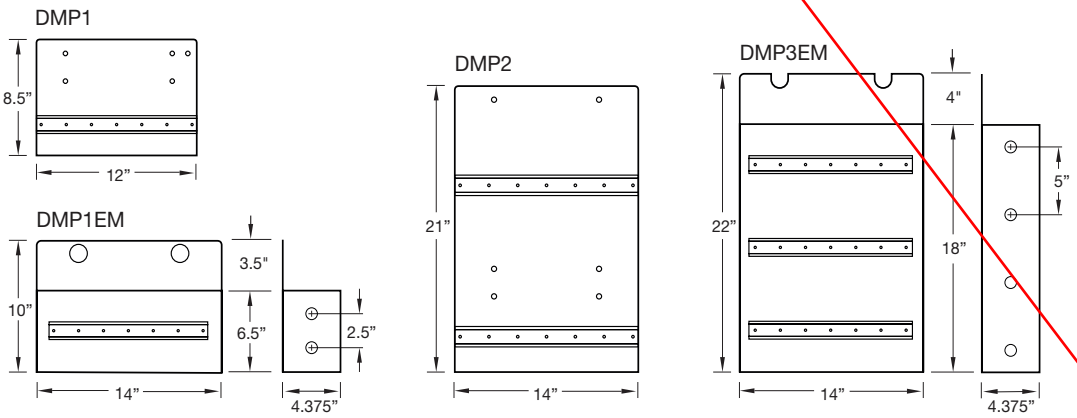

PROJECT		LOCATION/ TYPE	

TUB DIMENSIONS

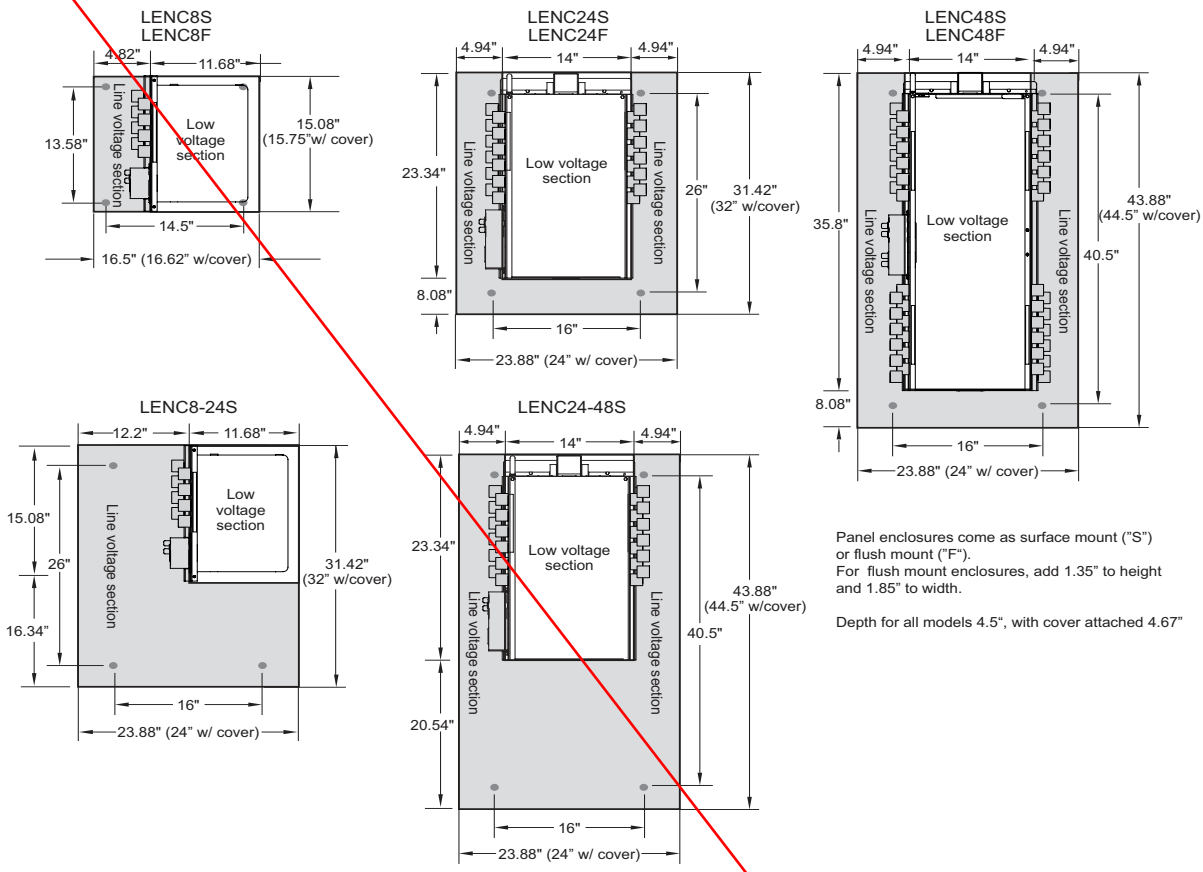

Panel enclosures come as surface mount ("S") or flush mount ("F").
For flush mount enclosures, add 1.35" to height and 1.85" to width.

Depth for all models 4.5", with cover attached 4.67"

ORDERING INFORMATION

Catalog #		Description	Overall Dimensions Including Cover (HxWxD)	Overall Weight
☐	LENC8S	8 relay capacity, surface mount	15.75" x 16.62" x 4.67"	18 lbs.
☐	LENC8F	8 relay capacity, flush mount	17.10" x 18.48" x 4.67"	20 lbs.
☐	LENC8-24S	8 relay capacity with 24 size tub, surface mount	32.00" x 24.00" x 4.67"	45 lbs.
☐	LENC24S	24 relay capacity, surface mount	32.00" x 24.00" x 4.67"	45 lbs.
☐	LENC24F	24 relay capacity, flush mount	33.35" x 25.85" x 4.67"	50 lbs.
☐	LENC24-48S	24 relay capacity with 48 size tub	44.50" x 24.00" x 4.67"	62 lbs.
☐	LENC48S	48 relay capacity, surface mount	44.50" x 24.00" x 4.67"	62 lbs.
☐	LENC48F	48 relay capacity, flush mount	45.85" x 25.85" x 4.67"	66 lbs.
☐	DMP	Mounting Plate, one DIN rail for up to 6 contactors	8" x 12" x 0.34"	1.86 lbs.
☐	DMP-2	Mounting Plate, one DIN rail for up to 12 contactors	21" x 14" x 0.34"	5.30 lbs.
☐	DMP-1EM	Mounting Plate, one DIN rail with barrier for up to 4 ELCU-100s	10" x 14" x 4.39"	3.64 lbs.
☐	DMP-3EM	Mounting Plate, three DIN rails with barrier for up to 12 ELCU-100s	22" x 14" x 4.39"	7.60 lbs.

27224r1 Rev 03/2021

Job Name : Soledad Community Center Gym
Manufacturer : WATTSTOPPER
Model Number : LMDM-101-W-U

Type :

See attached equipment cut sheets at the end of submittal for revised dimming controls for control via existing line voltage wiring.

WATTSTOPPER®

legrand

DIMMING WALL SWITCH

LMDM-101

Low voltage switch for control of dimmable loads

Component of Digital Lighting Management integrated control system

Plugs to other components using Cat 5e cables with RJ45 connectors eliminating wiring errors

LED bar graph indicates relative light level of controlled load

Active Dim feature enables temporary adjustment of any selected load

Plug n' Go automatic configuration and Push n' Learn for personalization

DESCRIPTION

The LMDM-101 Dimming Wall Switch is a low voltage device for dimming control of one or more lighting loads. It is part of a Digital Lighting Management (DLM) system and can dim load(s) connected to DLM dimming room controllers and switch load(s) connected to DLM on/off room controllers.

OPERATION

The LMDM-101 operates on Class 2 power supplied to a DLM local network by one or more room controllers. Plug n' Go automatic configuration assigns all loads connected to dimming room controllers to the dimming switch upon system startup. When multiple switches are installed, default operation is for multi-way control; each switch controls all of the loads on the system. Dimming switches may be reconfigured using Push n' Learn to control only selected loads. The LMDM-101 may be used to raise or lower light levels, recall a preset level and turn lights on or off. In Active Dim mode, users can temporarily adjust the level of any dimmable load or scene on the local network by selecting a load or scene button.

LED INDICATORS AND IR COMMUNICATIONS

A single blue LED shows the on/off status of the load(s) assigned to the dimming switch. An LED array in the bezel of the switch tracks progress of a fade and indicates the output level to the load. Each dimming switch may be personalized in the field with custom-engraved buttons. The IR transceiver in the LMDM-101 allows two-way communication for both wireless configuration, using Push n' Learn and the LMCT-100-2 wireless configuration tool, and system operation, using handheld remotes.

APPLICATIONS

The LMDM-101 is ideal for use in applications where dimming control is desired, such as conference and board rooms, classrooms, training centers and private offices. Used together with the LMSW-105 DLM Scene Switch, the LMDM-101 works as part of a flexible scene-based preset dimming system. Digital Lighting Management's Active Dim feature gives designers the option of reducing wall clutter by facilitating scene setting without the need for individual dimming switches for each load.

FEATURES

- Hidden configuration button for easy access to Push n' Learn
- Used with DLM dimming room controller
- Digital Lighting Management components plug together on a free-topology Category 5e DLM local network
- Provides full function dimming control in multi-way applications, such as 3-way, 4-way, and beyond
- Infrared (IR) transceiver for wireless configuration and control
- LED status indicator
- Sleek single gang device fits decorator wall plates
- Six color options and custom engraving options; standard buttons may be replaced in the field
- The product meets the materials restrictions of RoHS
- BAA/TAA-compliant models available

PROJECT		LOCATION/ TYPE	

DIGITAL LIGHT MANAGEMENT | Personal Controls

legrand

SPECIFICATIONS

- Input voltage: 24VDC from DLM local network
- Current consumption: 5mA
- DLM local network connection: 2 RJ45 ports
- Control button with LED status indicator
- 7-LED dimming level indicator
- Infrared (IR) transceiver
- Hidden configuration button for access to Push n' Learn mode
- Operating conditions: for indoor use only; 32-131°F (0-55°C); 5-95% RH, non-condensing
- UL and cUL listed
- FCC part 15 compliant
- Five year warranty

CONTROLS & DIMENSIONS

Controls

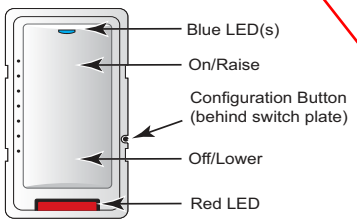

Dimensions

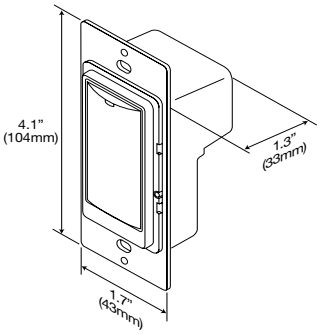

MOUNTING & CONNECTING

Mounting

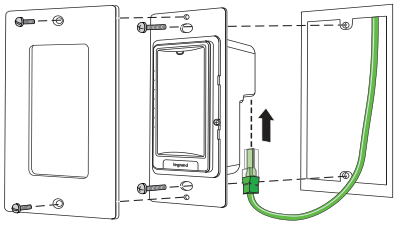

LMDM-100 Dimming Wall Switches fit in standard single gang boxes.

Sample Connection Diagram with 0-10 Volt Dimming

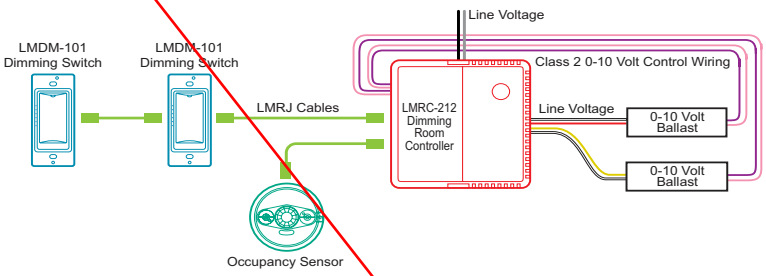

Plug DLM local network components together in any configuration using Cat 5e cables with RJ45 connectors.

ORDERING INFORMATION

Catalog #	Color	Description
☐ LMDM-101-W	White	1-Button Dimming Wall Switch
☐ LMDM-101-W-U	White	1-Button Dimming Wall Switch, BAA/TAA compliant*
☐ LMDM-101-LA	Light Almond	1-Button Dimming Wall Switch
☐ LMDM-101-I	Ivory	1-Button Dimming Wall Switch
☐ LMDM-101-I-U	Ivory	1-Button Dimming Wall Switch, BAA/TAA compliant*
☐ LMDM-101-G	Gray	1-Button Dimming Wall Switch
☐ LMDM-101-B	Black	1-Button Dimming Wall Switch
☐ LMDM-101-R	Red	1-Button Dimming Wall Switch
☐ LMCT-100-2		Digital Wireless Configuration Tool

Switches do not include face plates. Order decorator style plate separately.
*Product is compliant with Buy American Act and Trade Agreement Act.

27392r3 Rev 02/22

WATTSTOPPER®

legrand

WIRELESS CONFIGURATION TOOL WITH USB

LMCT-100-2

Wireless advanced configuration capabilities for Digital Lighting Management systems

Component of Digital Lighting Management integrated control systems

Easy-to-read OLED screen

Micro-USB port allows easy updating of firmware.

2-way IR communication for data upload, download, confirmation and storage

Easy-to-use navigation pad

Configures occupancy sensors, switches, room controllers, photosensors and DLM relay panels

RoHS

DESCRIPTION

The LMCT-100-2 Wireless Configuration Tool is a handheld tool for advanced remote configuration of any Wattstopper Digital Lighting Management (DLM) system. The tool enables system and device modifications via pushbutton, without ladders or tools, as well as easy duplication of settings between DLM local networks.

OPERATION

Powered by three AAA batteries, the LMCT-100-2 features an easy-to-read organic LED (OLED) screen and bi-directional communication with IR-enabled DLM devices. Its intuitive navigation pad provides a familiar interface for users who can see the current system parameters of a DLM local network and make changes by navigating through simple menus. Adjustable occupancy sensor parameters include sensitivity, time delay and trigger modes. Load parameter settings (also referred to as Push n' Learn™) include blink warning, Auto- or Manual-on mode, and re-assigning specific loads to different sensors. Button configuration options include type (load or scene), mode, fade times and scene lock. Dimming parameters include low/high trim, preset level and lamp burn in time. Daylighting adjustments include operating mode, setpoints, fade times and time delays. The LMCT is also used to adjust the light level of dimmed loads. As new DLM products are released, a micro-USB port allows for easy firmware updates via software.

CONFIGURATION AND PERSONALIZATION

The LMCT-100-2 simplifies the replication of occupancy sensor settings from one DLM local network to another and facilitates scene setting. It can store up to nine sensor profiles and assign them to sensors in any DLM local network. For projects where identical settings may be desired across a large number of spaces, this capability provides a streamlined method of configuration. Settings can be copied throughout a building or in different buildings. The LMCT also allows manual adjustment of individual load levels. This powerful feature allows different lighting scenes to be set and stored without the need for dimming switches in each space. Scenes can be recalled by scene switches or multi-button switches configured for scene control.

APPLICATIONS

Designers and installers can use the LMCT-100-2 to ensure conformity with design intent. It simplifies changes to occupancy sensor settings, load configurations and dimming parameters by making the adjustment process ladder-free. An LMCT-100-2 is required for calibrating the LMLS-500 photosensor. The self-calibrating LMLS-400 does not require the use of an LMCT-100-2 unless operating parameters need to be adjusted. The LMCT-100-2 is also required for configuration and maintenance of LMCP series relay control panels.

FEATURES

- Remotely reconfigures and reports DLM occupancy sensor parameters: PIR and ultrasonic sensitivity; time delay; walk through mode; trigger mode (for dual technology sensors)
- Remotely reconfigures and reports DLM dimming parameters: load type (dim/switch); low/high trim; preset on level; lamp burn-in
- Manually adjusts light level of dimmed loads to facilitate scene setting
- Remotely configures, reconfigures and reports DLM photosensor settings: light levels; operating mode (on/off, bi-level, tri-level, dimming); setpoints; time delays; fade times; test mode
- Micro-USB port provided for firmware updates, allowing easy updates for support of new DLM products
- The product meets the materials restrictions of RoHS

PROJECT		LOCATION/ TYPE	

DIGITAL LIGHT MANAGEMENT | Configuration Tools

SPECIFICATIONS

- Three AAA 1.5 volt batteries (included)
- OLED display 1.4"W x .75"H (36mm x 19mm)
- Infrared (IR) transceiver (36kHz frequency)
- IR range: up to 32' (10m)
- Micro-USB port for firmware updating
- Includes carrying case with belt clip
- Operating temperature: 32-104°F (0-40°C)
- FCC part 15 compliant
- Five year warranty

CONFIGURATION MENUS

LMCT-100-2 Handheld Remote with Menu Screens

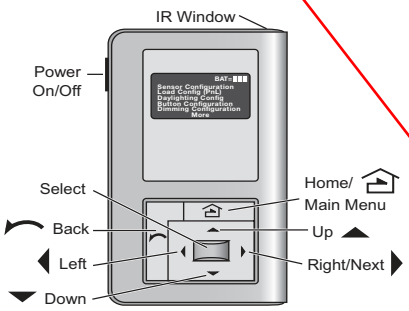

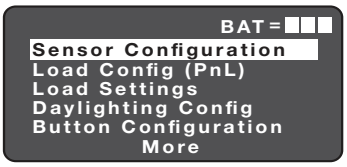

Up or Down Button

Select Button

The Home (or Main) menu displays after the power-up process completes. It contains information on the battery status and six menu choices.

The Sensor Configuration function enables users to change sensor parameters, including time delay and sensitivity, save configurations, enter test mode and apply saved configurations.

Dimensions

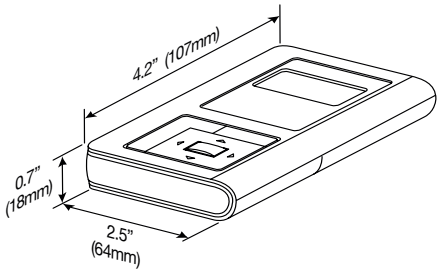

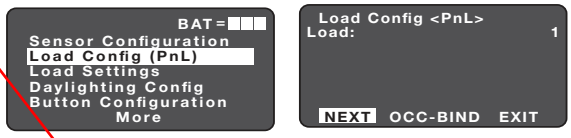

The Load Configuration function (also referred to as Push n' Learn) enables users to identify load numbers, view and change load parameters and load bindings to sensors.

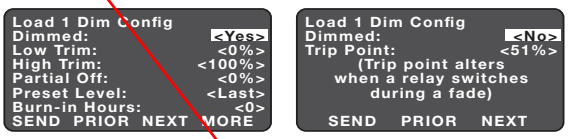

The Dimming Configuration function enables users to customize parameters for performance and savings. Setting a high level trim below 100% saves energy and increases lamp life.

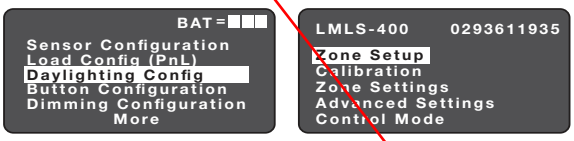

The Daylighting Configuration function enables users to initiate automatic calibration of the LMLS-400, calibrate the LMLS-500, and adjust setpoints and other parameters for both photosensors and enter test mode.

ORDERING INFORMATION

Catalog #	Description
LMCT-100-2	Wireless Configuration Tool with USB
LMCT-100-2-U	Wireless Configuration Tool with USB, BAA/TAA compliant*

*Product is compliant with Buy American Act and Trade Agreement Act

26837r1 Rev 03/21

369904n 1 11.11.22

Vive Maestro Wireless Dimmers and Switches

The Maestro Wireless solution incorporates Maestro Wireless load controls, wireless sensors, and wireless remote controls, which provide a system that delivers energy savings, convenience, and ease of installation.

Maestro Wireless dimmers and switches use Lutron patented Clear Connect RF Technology, which enables wireless communication with Radio Powr Savr sensors and Pico remote controls for light control and general switched loads.

These products are also compatible with the Vive hub which enables a simple setup process using a standard web browser on any Wi-Fi enabled phone, tablet or computer. It also enables control and monitoring of all Vive devices. The Vive hub can be added at any time. System reprogramming will be required. For a complete list of features supported with the Vive hub, see specification submittal 369902.

Note for Replacement: MRF2S - the “S” model can replace the non-”S” model.

Features

- The Maestro Wireless solution provides dimming/switching of multiple load types, occupancy/vacancy sensing, and daylight harvesting.
- Lutron patented Clear Connect RF Technology works through walls and floors.
- Incorporates advanced features such as fade ON/fade OFF, high-end trim, and rapid full-ON (a Vive hub is required to set high-end trim).
- Controls include Front Accessible Service Switch (FASS) for safe lamp replacement.
- Two-wire dimmers and switches available for retrofit applications.
- Power failure memory: If power is interrupted, the control will return to its previously set level prior to interruption.

Receiving Devices
Maestro Wireless Controls

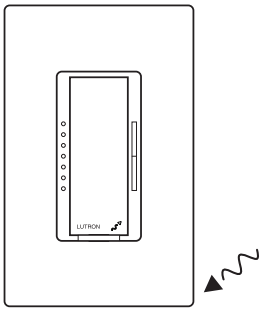

Neutral and Non-Neutral Dimmers

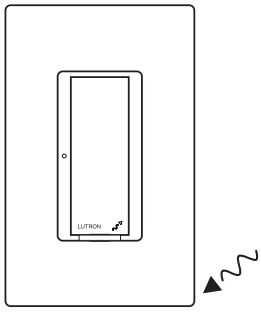

Neutral and Non-Neutral Switches

Transmitting Devices
Radio Powr Savr Sensors

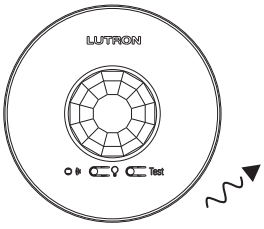

Ceiling-Mounted Occupancy and Vacancy Sensors

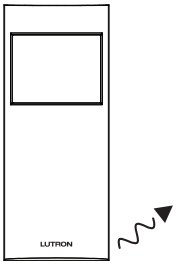

Wall-Mounted Occupancy and Vacancy Sensors

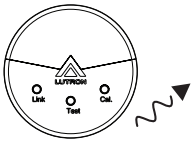

Daylight Sensors

Pico Remote Controls

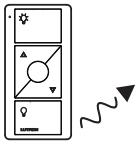

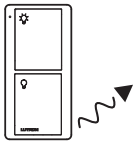

Provide and install powered dimmer switch shown to connect to existing line voltage control wiring for gym lighting for ELV dimming.

Maestro Wireless Dimmers

Models Available

Dimmers

Dimmer

CFL/LED/Halogen/Incandescent

MRF2S-6CL-XX[1]	150 W CFL/LED Dimmer 600 W/600 VA Incandescent, 120 V~ 250 W (6 max) Lutron Hi-lume 1% 2-wire (LTE) LED drivers
MRF2S-6ND-120-XX[1,2]	600 W/600 VA Spec-Grade Neutral Wire Dimmer, 120 V~ 150 W CFL/LED Dimmer 350 W (8 max) Lutron Hi-lume 1% 2-wire (LTE) LED drivers

Electronic Low-Voltage Dimmer

MRF2S-6ELV120-XX[1]	600 W ELV Dimmer 120 V~ (neutral required) 150 W CFL/LED Dimmer

Companion Dimmers

Companion Dimmer

Claro Gloss Finishes

MA-R-XX[1,2]	Companion Dimmer 120 V~

Satin Colors Satin Finishes

MSC-AD-XX[1]	Companion Dimmer 120 V~

1 "XX" in the model number represents color/finish code. See **Colors and Finishes** at end of document.

2 BAA-compliant model numbers available. Add a "U" prefix to the model number. For a complete list of BAA/TAA compliant products please visit our website at Lutron.com/BAA and select "Download BAA Product List".

Ganging and Derating

When combining controls in the same wallbox, derating is required.

Dimmer Load Type and Capacity

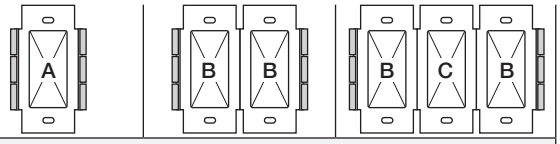

No Neutral Required

Control	Voltage	Load Type	Minimum Load	Maximum Load		
				A: Not Ganged	B: End of Gang	C: Middle of Gang
MRF2S-6CL [1,2,3]	120 V~	CFL/LED	See lamp list	See *Mixing Lamp Types*		
		Incandescent/Halogen	50 W	600 W	500 W	400 W
		Hi-lume 1% 2-wire (LTE) LED driver	1 driver	250 W (6 drivers)	250 W (6 drivers)	250 W (6 drivers)

Neutral Required

Control	Voltage	Load Type	Minimum Load	Maximum Load		
				A: Not Ganged	B: End of Gang	C: Middle of Gang
MRF2S-6ELV120 [1,2]	120 V~	ELV	5 W	600 W	500 W	400 W
		CFL/LED	See lamp list	See *Mixing Lamp Types*		
MRF2S-6ND-120 [1,2,3]	120 V~	Incandescent/Halogen	25 W	600 W	500 W	400 W
		MLV [2]	25 W/VA	450 W/600 VA	400 W/500 VA	300 W/400 VA
		CFL/LED	See lamp list	See *Mixing Lamp Types*		
		Hi-lume 1% 2-wire (LTE) LED driver	1 driver	350 W (8 drivers)	350 W (8 drivers)	350 W (8 drivers)

Note: Do not mix ELV and MLV load types on a single control.

1 Dimmer Load Type:
- MRF2S-6CL is designed for use with permanently-installed incandescent, CFL, LED, or tungsten halogen only.
- MRF2S-6ND-120 is designed for use with permanently-installed incandescent, CFL, LED, magnetic low-voltage, or tungsten halogen only. Can control Power Modules (PHPM-PA-DV, PHPM-3F-DV-WH, PHPM-WBX-DV-WH, and GRX-TVI) and legacy interfaces Hi-Power 2•4•6 Boosters (HP-2, HP-4, HP-6).
- MRF2S-6ELV120 is designed for use with permanently-installed electronic low-voltage, incandescent, CFL, LED or tungsten/halogen only. Do not install dimmers to control receptacles or motor-operated appliances.

2 Low-Voltage Applications:
- Use MRF2S-6ND-120 with magnetic (core and coil) low-voltage transformers only. Not for use with electronic (solid-state) low-voltage transformers.
- Use MRF2S-6ELV120 with electronic (solid-state) low-voltage transformers only. Operation of a low-voltage circuit with lamps inoperative or removed may result in transformer overheating and premature failure. Lutron strongly recommends the following:
  - Do not operate low-voltage circuits without operative lamps in place.
  - Replace burned-out lamps as quickly as possible.
  - Use transformers that incorporate thermal protection or fused transformer primary windings to prevent transformer failure due to overcurrent.
- See Application Note #559 for dimming low voltage LEDs.

3 BAA-compliant model numbers available. Add a "U" prefix to the model number. For a complete list of BAA/TAA compliant products please visit our website at Lutron.com/BAA and select "Download BAA Product List".

Mixing Lamp Types

Mixing lamp types (using a combination of CFL/LED, and Incandescent/Halogen bulbs) and ganging with other dimmers or electronic switches may reduce maximum wattage, as shown.

Example: If fins from one side of dimmer are removed and you have two 24 W bulbs installed (total CFL Wattage = 48 W), you may add up to 300 W of incandescent or halogen lighting.

Example: If a dimmer is installed in location "B" above and there are two 24 W CFL bulbs installed (Total CFL Wattage = 48 W), you may add up to 300 W of incandescent or halogen lighting.

Do not remove outside fins on ends of ganged controls (shaded areas below)

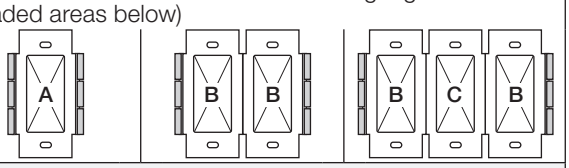

Total CFL/LED Wattage		Total Incandescent/Halogen Wattage				
		A: Not Ganged		B: End of Gang		C: Middle of Gang
MRF2S-6CL						
0 W	+	50 W–600 W	Or	50 W–500 W	Or	50 W–400 W
1 W–25 W	+	0 W–500 W	Or	0 W–400 W	Or	0 W–300 W
26 W–50 W	+	0 W–400 W	Or	0 W–300 W	Or	0 W–200 W
51 W–75 W	+	0 W–300 W	Or	0 W–200 W	Or	0 W–100 W
76 W–100 W	+	0 W–200 W	Or	0 W–100 W	Or	0 W–50 W
101 W–125 W	+	0 W–100 W	Or	0 W–50 W	Or	0 W
126 W–150 W	+	0 W	Or	0 W	Or	0 W

Job Name:

Job Number:

Model Numbers:

Maestro Wireless Switches

Models Available

Switches

Lighting and motor loads

MRF2S-6ANS-XX[1,2,4]	6 A Lighting / 3 A Fan (1/10 HP motor), Electronic Switch 120 V~
MRF2S-8ANS120-XX[1,2,4]	8 A Lighting, 5.8 A Fan (1/4 HP motor), Spec-Grade Electronic Switch 120 V~
MRF2S-8S-DV-XX[2,3,4]	8 A Lighting, 3 A Fan (1/10 HP motor, 120 V~ only), Spec-Grade Electronic Switch 120–277 V~, no neutral wire required

Switch

Companion Switches

Claro Gloss Finishes

MA-AS-XX[2,4]	Companion Switch 120 V~

Satin Colors Satin Finishes

MSC-AS-XX[4]	Companion Switch 120 V~

Companion Switch

1 Neutral wire required.

2 BAA-compliant model numbers available. Add a “U” prefix to the model number. For a complete list of BAA/TAA compliant products please visit our website at Lutron.com/BAA and select “Download BAA Product List”.

3 May require LUT-MLC (included with MRF2S-8S-DV models) to ensure proper function with low-wattage load types. See page 11 for details. If controlling Type B TLED bulbs, consult Application Note 812 (P/N 048812) on www.lutron.com

4 “XX” in the model number represents color / finish code. See **Colors and Finishes** at end of document.

Ganging and Derating

When combining controls in the same wallbox, derating is required.

Switch Load Type and Capacity

Neutral Required

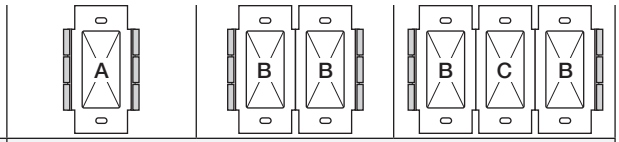

Control	Voltage	Load Type	Minimum Load	Maximum Load		
				A: Not Ganged	B: End of Gang	C: Middle of Gang
MRF2S-8ANS120 [1,2,5]	120 V~	Lighting	25 W	8 A	6.5 A	5 A
		Fan Motor	0.2 A	1/4 HP (5.8 A)	1/4 HP (5.8 A)	1/6 HP (4.4 A)
MRF2-6ANS [1]	120 V~	Lighting	25 W	6 A	5 A	3.5 A
		Fan Motor	0.2 A	1/10 HP (3 A)	1/10 HP (3 A)	1/10 HP (3 A)

No Neutral Required

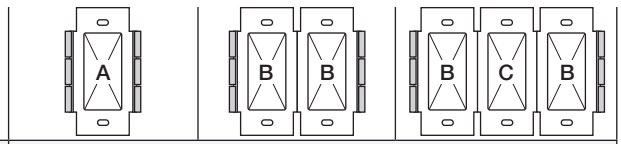

Control	Voltage	Load Type	Minimum Load	Maximum Load		
				A: Not Ganged	B: End of Gang	C: Middle of Gang
MRF2S-8S-DV [1,5]	120–277 V~	Incandescent/Halogen	25 W	8 A	8 A/7 A[4]	7 A
	120–277 V~	Fluorescent/LED/CFL	40 W (LUT-MLC)[3]	8 A	8 A/7 A[4]	7 A
	120 V~	Fan Motor	0.4 A	1/10 HP (3 A)	1/10 HP (3 A)	1/10 HP (3 A)

1 Switch Load Type:
- MRF2S-8ANS120 is designed for use with permanently-installed lighting loads and with fan motor loads up to 1/4 HP (5.8 A).
- MRF2S-8S-DV is designed for use with permanently-installed lighting loads and with fan motor loads up to 1/10 HP (3 A, 120 V~ only).
- MRF2-6ANS is designed for use with permanently-installed lighting loads and with fan motor loads up to 1/10 HP (3 A).

2 For loads larger than 8 A (120 V~), the MRF2S-8ANS120 switch can be used with the PHPM-SW-DV-WH power booster.

3 The LUT-MLC ensures proper function with low-wattage fluorescent, CFL, and LED load types. See page 11 for details.

4 Maximum load for double-gang application is 8 A. Triple-gang application derates maximum load to 7 A.

5 BAA-compliant model numbers available. Add a “U” prefix to the model number. For a complete list of BAA/TAA compliant products please visit our website at Lutron.com/BAA and select “Download BAA Product List”.

Specifications

Regulatory Approvals

- UL® Listed.
- cUL® Listed (MRF2S-6CL only).
- CSA Certified (except for MRF2S-6CL).
- FCC Approved. Complies with the limits for a Class B digital device, pursuant to Part 15 of the FCC Rules.
- Industry Canada Certified.
- The following model numbers have been tested and found compliant with UL 2043 for use in air handling spaces: MRF2S-6CL-GR, MRF2S-6ELV-GR, MRF2S-6ND-GR. However, the RMJS-PNE-DV Phase Selectable PowPak is the recommended solution for these applications.

Power

Operating voltage:

- 120 V∼ 50/60 Hz (all models)
- 277 V∼ 50/60 Hz (MRF2S-8S-DV)

Environment

- Ambient operating temperature: 32 °F to 104 °F (0 °C to 40 °C)
- 0% to 90% humidity, non-condensing.
- Indoor use only.
- All drivers and ballasts used with Vive wireless controls must comply with the limits for a Class A device pursuant to Part 15 of the FCC Rules.

Key Design Features

Dimmers

- On a single-tap, lights fade UP or DOWN.
- On a double-tap, lights go to full ON.
- Light levels can be fine-tuned by pressing and holding the dimming rocker until the desired light level is reached.
- Two-wire dimmers available.

Switches

- On a single-tap, lights turn ON or OFF.
- Two-wire switches available.

All RF Local Controls

- Tested to withstand electrostatic discharge without damage or memory loss, in accordance with IEC 61000-4-2.
- Tested to withstand surge voltages without damage or loss of operation, in accordance with IEEE C62.41-1991 Recommended Practice on Surge Voltages in Low-Voltage AC Power Circuits.
- Controls always operate locally and do not require system control.
- Power failure memory: should power be interrupted, the control will return to its previously-set level prior to the interruption when power is restored.
- Uses conventional 3-way and 4-way wiring.
- Multiple location control from dimmer/switch and up to nine companion dimmers/switches.
- Use Lutron Designer (Claro and Satin Colors) wallplates or designer-style wallplates from other manufacturers. Wallplates are sold separately.
- Lutron Claro and Satin Colors wallplates snap on with no visible means of attachment.
- Requires a one-gang U.S. wallbox; 3½ in (89 mm) deep recommended, 2¼ in (57 mm) deep minimum.
- Green indicator lights.

System Communications and Capacity

- Maestro Wireless controls communicate with the Pico remote controls and Radio Power Savr sensors through radio frequency (RF).
- Receives wireless inputs from up to 10 Pico remote controls, 10 Radio Powr Savr occupancy/vacancy sensors, and 1 Radio Powr Savr daylight sensor
- Maestro Wireless local controls must be located within 60 ft (18 m) line-of-sight or 30 ft (9 m) through walls, of Radio Power Savr sensors. The 60 ft (18 m) range is not reduced by a ceiling tile obstruction.
- Maestro Wireless local controls must be located within 60 ft (18 m) line-of-sight or 30 ft (9 m) through walls, of a Pico remote control. The 60 ft (18 m) range is not reduced by a ceiling tile obstruction.

Dimensions

All dimensions are shown as: in (mm)

Front View **Side View**

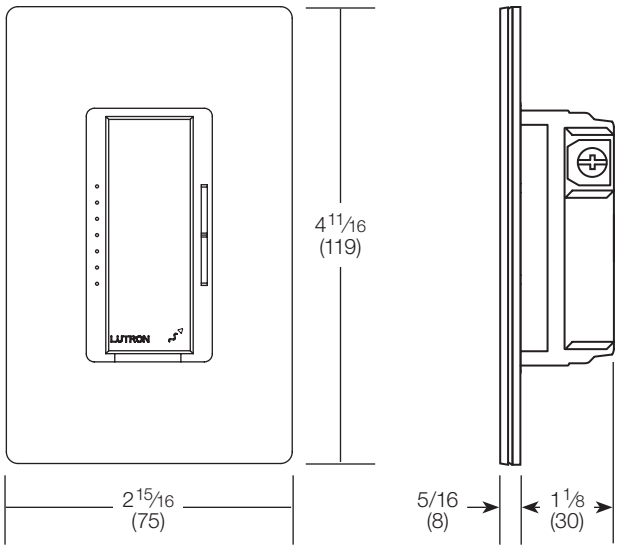

Mounting

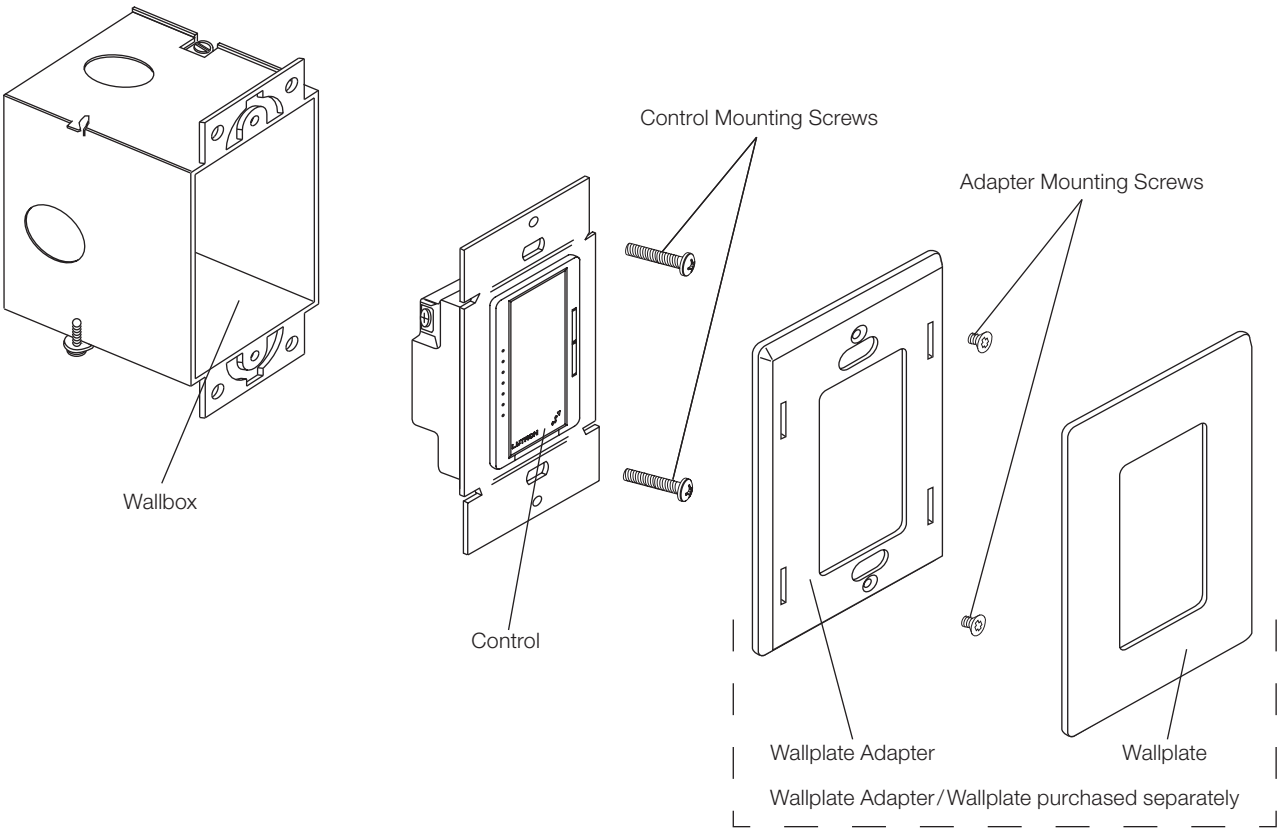

Job Name:	Model Numbers:	
Job Number:		

Operation

Dimmer

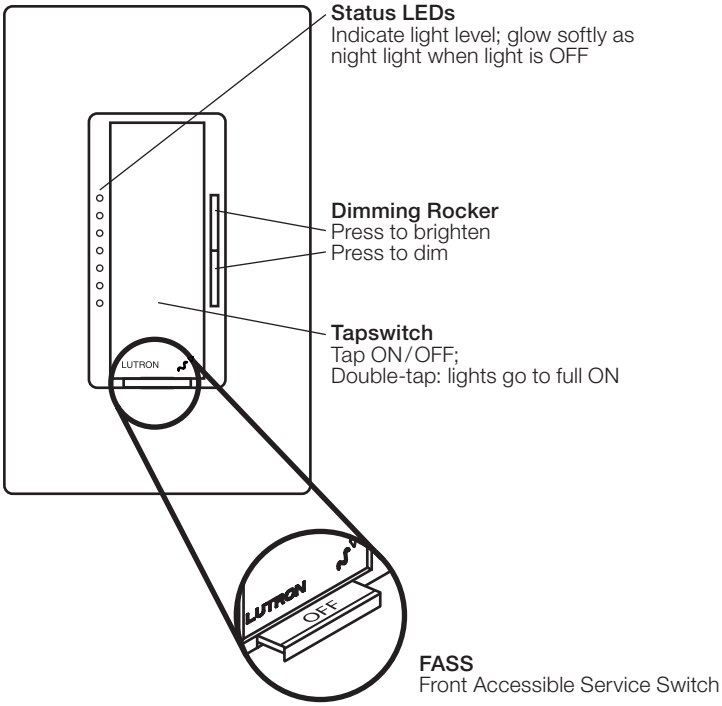

Switch

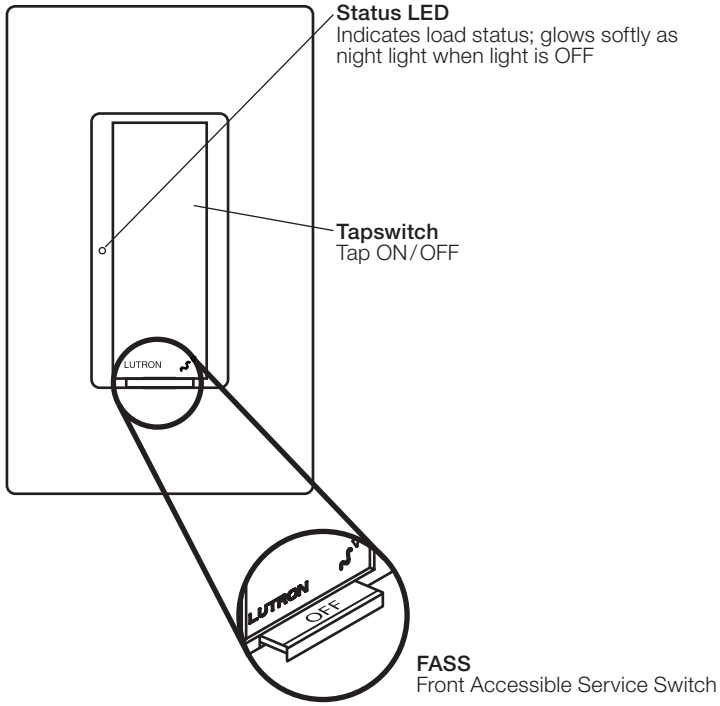

FASS Front Accessible Service Switch

Important Notice: To service load, remove power by pulling the FASS out completely on either the dimmer/switch or companion dimmer/switch. After servicing load, push the FASS back in fully to restore power to the control.

Wiring Diagrams

Single-Location Dimmer Installation without Neutral
MRF2S-6CL

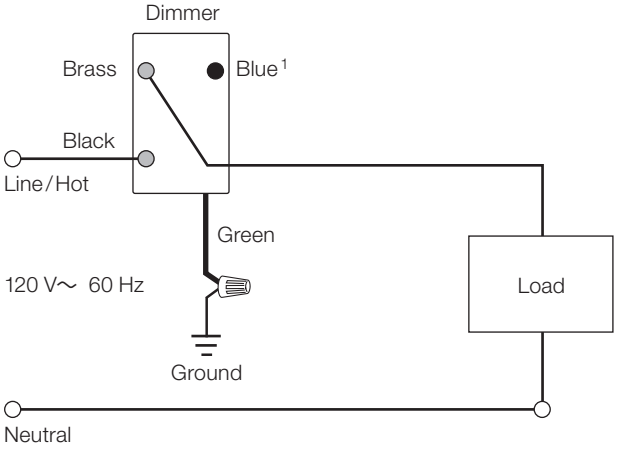

Multi-Location Dimmer Installation without Neutral[2]
MRF2S-6CL with MA-R/MSC-AD

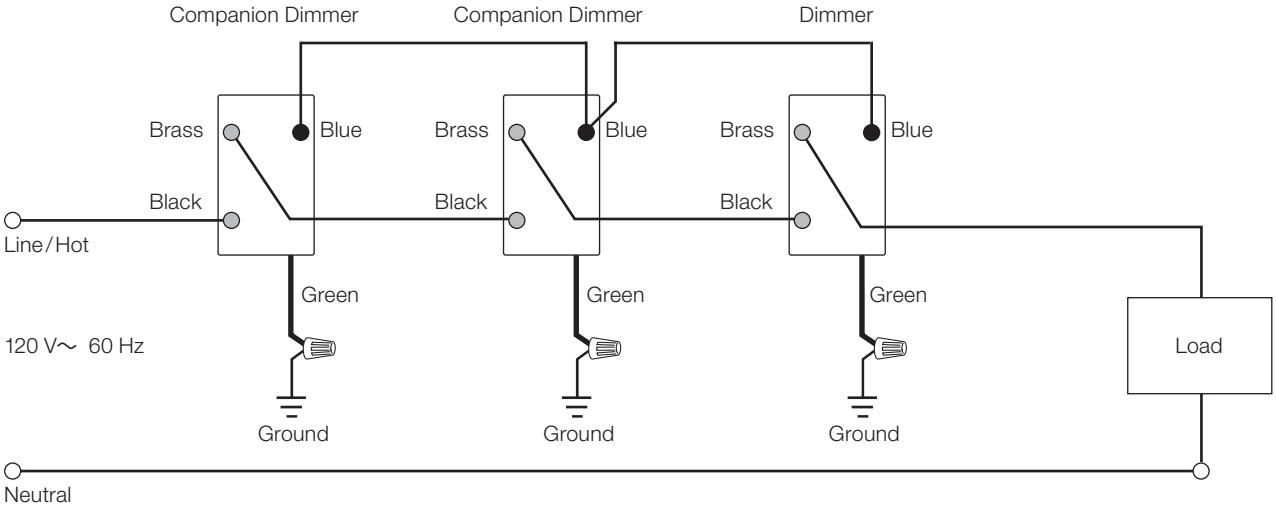

1 When using controls in single location installations, tighten the blue terminal without any wires attached. Do not connect the blue terminal to any other wiring or to ground.

2 Up to nine Maestro companion dimmers may be connected to the Maestro Wireless dimmer. Total blue terminal wire length may be up to 250 ft (76 m).

Wiring Diagrams (continued)

Single-Location Dimmer/Switch Installation with Neutral
MRF2S-6ND-120, -6ELV120, -8ANS120, and -6ANS

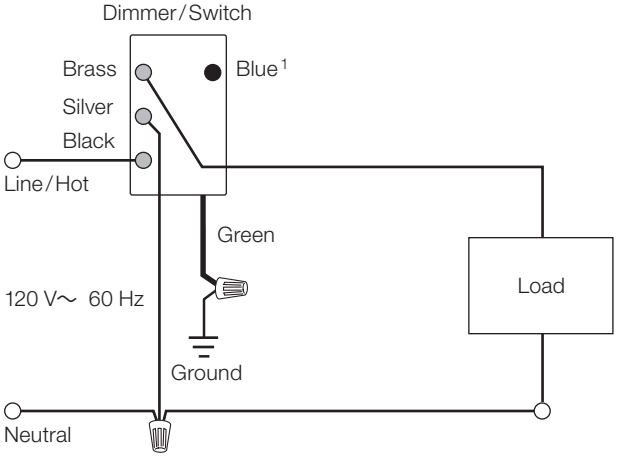

Multi-Location Dimmer/Switch Installation with Neutral[2,3]
MRF2S-6ND-120 and -6ELV120 with MA-R/MSC-AD or MRF2S-8ANS120 and -6ANS with MA-AS/MSC-AS

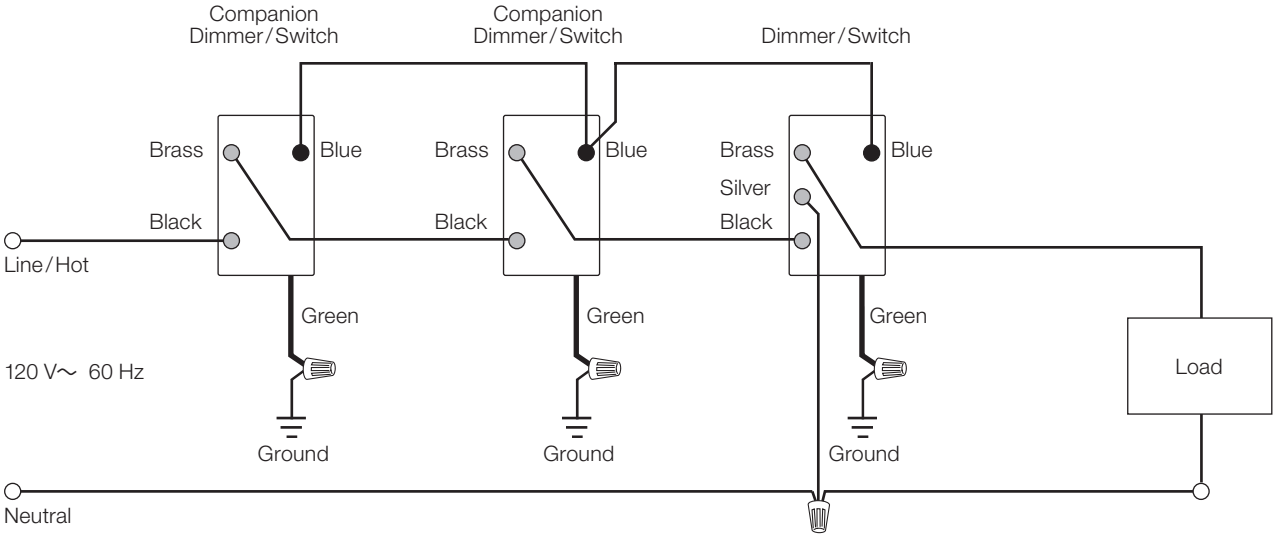

1 When using controls in single location installations, tighten the blue terminal without any wires attached. Do not connect the blue terminal to any other wiring or to ground.
2 Up to nine Maestro companion dimmers/switches may be connected to the Maestro Wireless dimmer/switch. Total blue terminal wire length may be up to 250 ft (76 m).
3 Neutral-wire dimmers/switches must be connected on the Load side of a multi-location installation.

Wiring Diagrams (continued)

Single-Location Switch Installation with LUT-MLC[1]
MRF2S-8S-DV

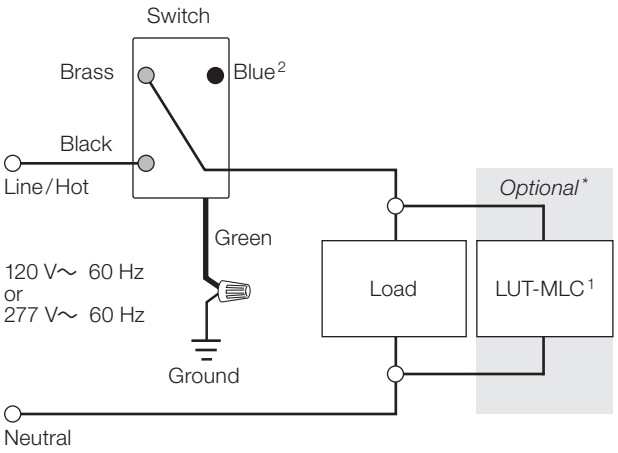

*** Optional Procedure:**
Using LUT-MLC with MRF2S-8S-DV-XX

- Install MRF2S-8S-DV-XX first without LUT-MLC to see if required. Check for problems with load.
- Problems can occur when low-wattage loads are used (< 40 W).
- If controlling Type B TLED bulbs, consult Application Note 812 (P/N 048812) on www.lutron.com
- Watch for flickering loads when dimmer is in electronic OFF state.
- If required, LUT-MLC can be installed between switched hot and neutral in wallbox if neutral is present, or in any fixture on the switched circuit.

Multi-Location Switch Installation with LUT-MLC[1,2,3]
MRF2S-8S-DV with MA-AS/MA-AS-277 or MSC-AS/MSC-AS-277[4]

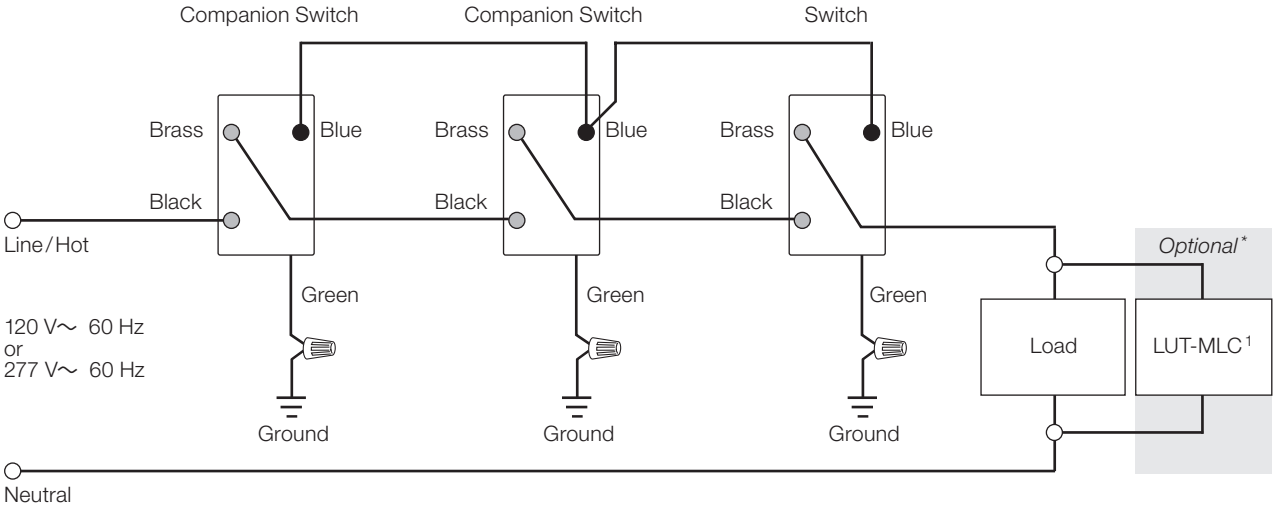

1 A LUT-MLC ensures proper function when fluorescent, CFL, or LED loads are used. Install the LUT-MLC inside a load fixture or in a separate J-box within the circuit.
2 When using controls in single-location installations, tighten the blue terminal without any wires attached. Do not connect the blue terminal to any other wiring or to ground.
3 Up to nine Maestro companion switches may be connected to the Maestro Wireless switch. Total blue terminal wire length may be up to 250 ft (76 m).
4 Requires MA-AS/MSC-AS for 120 V~ applications, and MA-AS-277/MSC-AS-277 for 277 V~ applications.

Wiring Diagrams (continued)

Single-Location Switch Installation with Power Booster Single Feed
MRF2S-8ANS120 and -6ANS with PHPM-SW-DV-WH

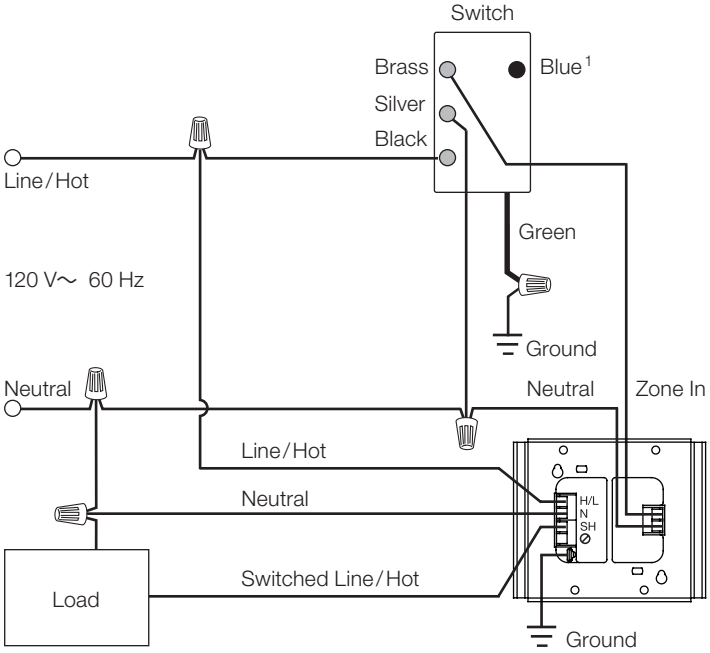

Multi-Location Switch Installation with Power Booster Single Feed[2,3]
MRF2S-8ANS120 and -6ANS with MA-AS/MSC-AS and PHPM-SW-DV-WH

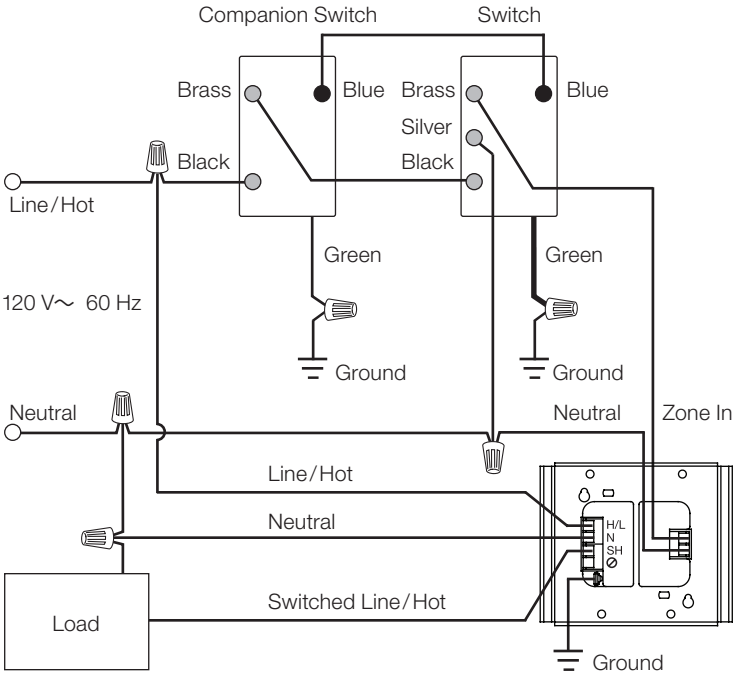

1 When using controls in single-location installations, tighten the blue terminal. Do not connect the blue terminal to any other wiring or to ground.
2 Up to nine Maestro companion switches may be connected to the Maestro Wireless switch. Total blue terminal wire length may be up to 250 ft (76 m).
3 Neutral-wire switches must be connected on the Load side of a multi-location installation.

Wiring Diagrams (continued)

Single-Location Switch Installation with Power Booster Dual Feed
MRF2S-8ANS120 and -6ANS with PHPM-SW-DV-WH

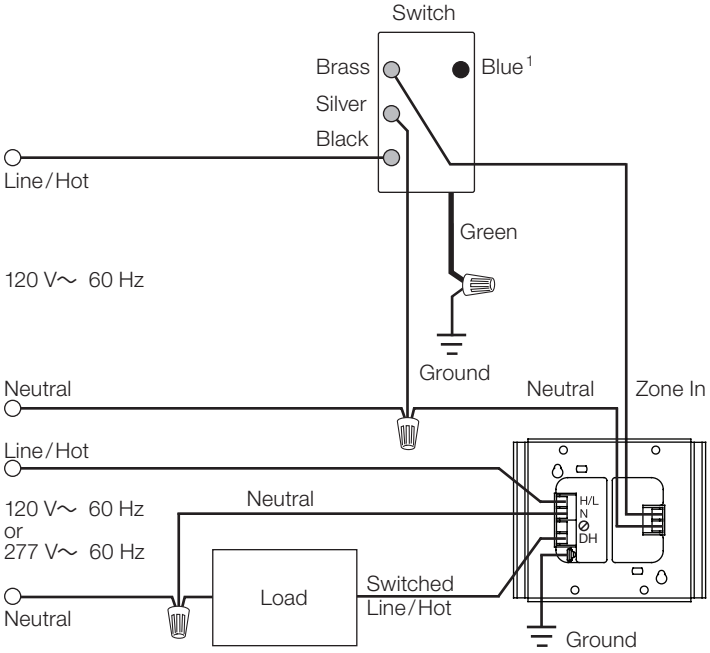

Multi-Location Switch Installation with Power Booster Dual Feed[1,2]
MRF2S-8ANS120 and -6ANS with MA-AS/MSC-AS and PHPM-SW-DV-WH

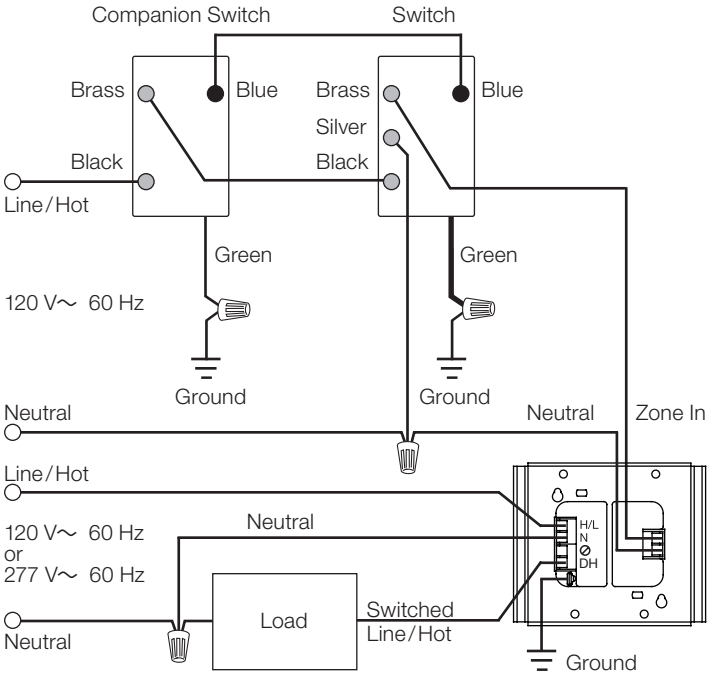

1 When using controls in single-location installations, tighten the blue terminal. Do not connect the blue terminal to any other wiring or to ground.
2 Up to nine Maestro companion switches may be connected to the Maestro Wireless switch. Total blue terminal wire length may be up to 250 ft (76 m).
3 Neutral-wire switches must be connected on the Load side of a multi-location installation.

Wiring Diagrams (continued)

Single-Location Dimmer Installation with Power Booster Single Feed
MRF2S-6ND-120 with PHPM-PA-DV-WH

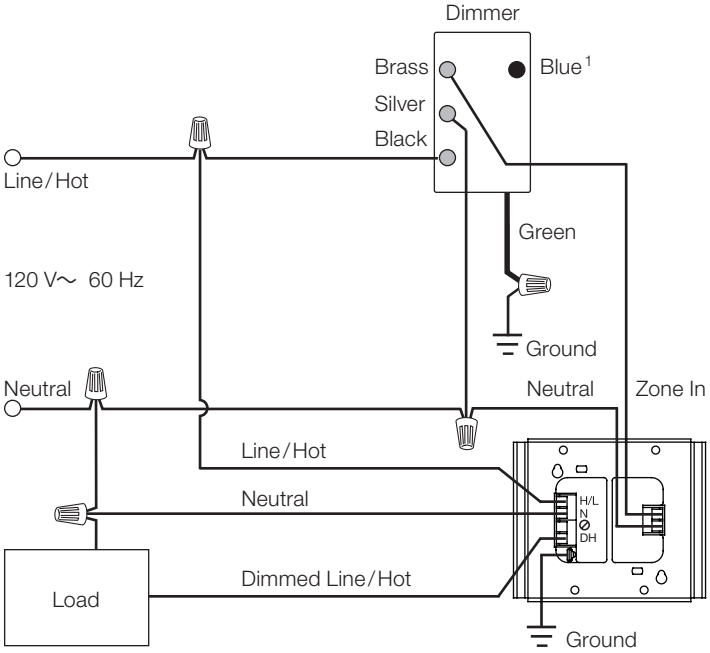

Multi-Location Dimmer Installation with Power Booster Single Feed [2,3]
MRF2S-6ND-120 with MA-R/MSC-AD and PHPM-PA-DV-WH

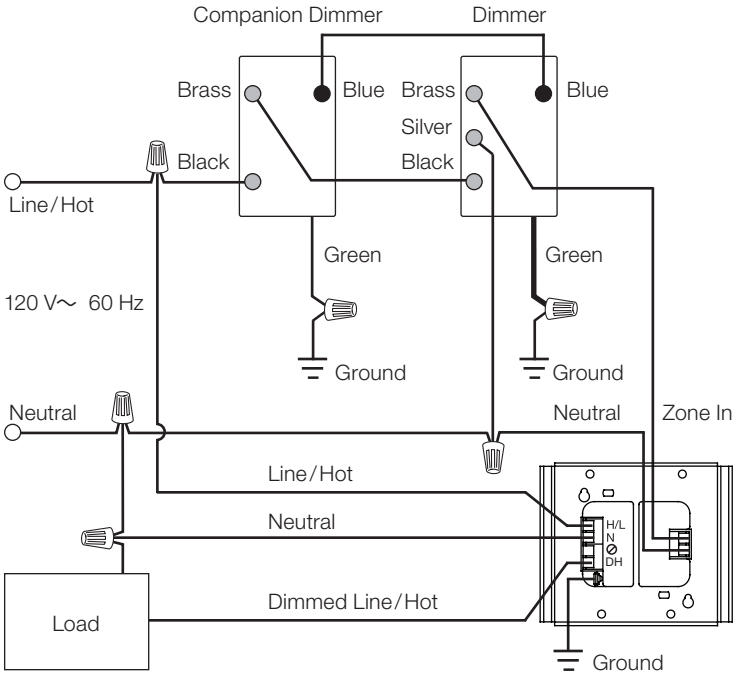

1 When using controls in single-location installations, tighten the blue terminal. Do not connect the blue terminal to any other wiring or to ground.
2 Up to nine Maestro companion dimmers may be connected to the Maestro Wireless dimmer. Total blue terminal wire length may be up to 250 ft (76 m).
3 Neutral-wire dimmers must be connected on the Load side of a multi-location installation.

Wiring Diagrams (continued)

Single-Location Dimmer Installation with Power Booster Dual Feed
MRF2S-6ND-120 with PHPM-PA-DV-WH

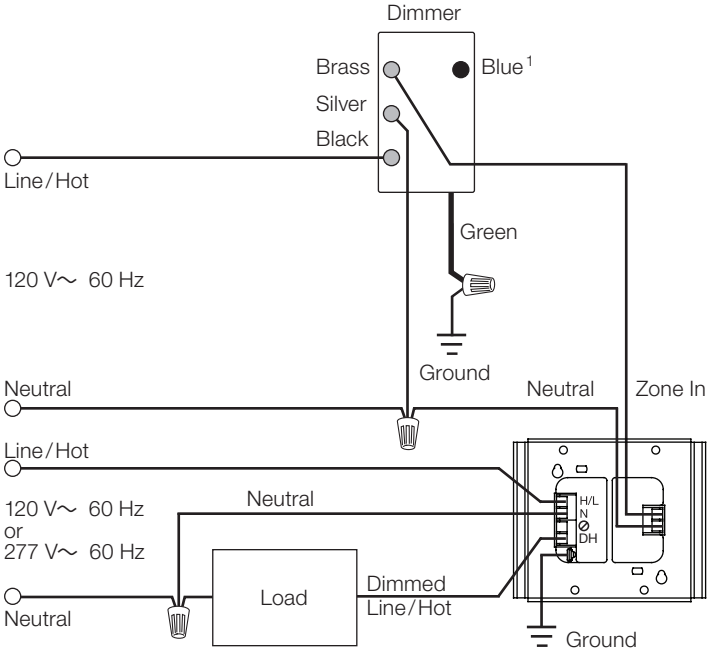

Multi-Location Dimmer Installation with Power Booster Dual Feed[2,3]
MRF2S-6ND-120 with MA-R/MSC-AD and PHPM-PA-DV-WH

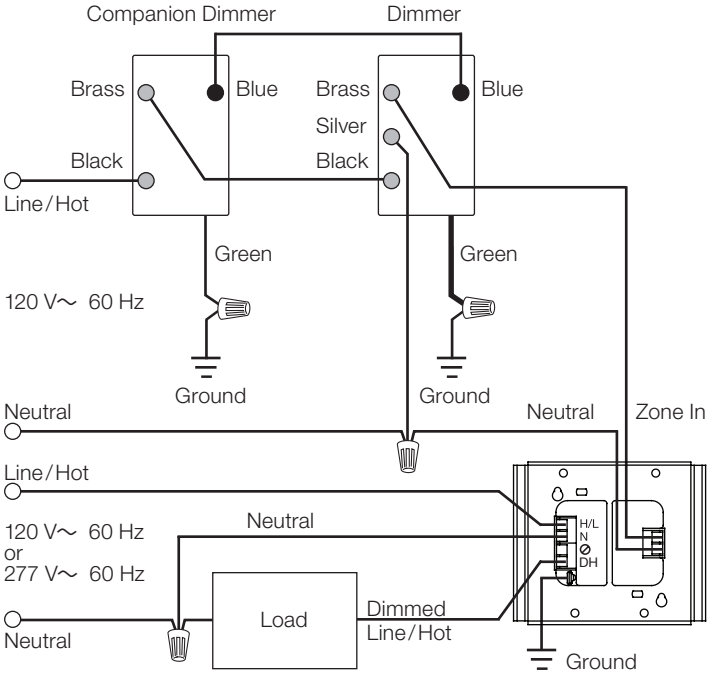

1 When using controls in single-location installations, tighten the blue terminal. Do not connect the blue terminal to any other wiring or to ground.
2 Up to nine Maestro companion dimmers may be connected to the Maestro Wireless dimmer. Total blue terminal wire length may be up to 250 ft (76 m).
3 Neutral-wire dimmers must be connected on the Load side of a multi-location installation.

Colors and Finishes

Gloss Finishes

White
WH

Ivory
IV

Almond
AL

Light Almond
LA

Gray
GR

Brown
BR

Black
BL

Satin Finishes

Snow White
SW

Midnight
MN

Taupe
TP

Biscuit
BI

Palladium
PD

Hot
HT

For the latest color offerings please see our website:
http://www.lutron.com/satincolors

Metal Finish (wallplate only)

Stainless Steel
SS

When using Stainless Steel wallplates, it is recommended that you order the dimmer/switch in Midnight (MN).

- Due to printing limitations, colors and finishes shown cannot be guaranteed to perfectly match actual product colors.
- Color chip keychains are available for more precise color matching:
  Gloss Finishes: DG-CK-1
  Satin Finishes: SC-CK-1

The Lutron logo, Lutron, Maestro, Maestro Wireless, Clear Connect, Pico, Claro, Vive, FASS, Hi-Power 2•4•6, Radio Powr Savr, Hi-lume, and the design of the Pico remote are trademarks or registered trademarks of Lutron Electronics Co., Inc. in the US and/or other countries.

All other product names, logos, and brands are property of their respective owners.

Job Name:	Model Numbers:	
Job Number:		

Provide and install equipment shown for connection of dimmer switch to existing line voltage control wiring for gym lighting line voltage dimming.

369835j 1 01.10.2024

Phase-Adaptive Power Module

- Provides dimming control for 1 zone of a full 16 A lighting load.
- May be used to dim incandescent, halogen, electronic low-voltage, magnetic low-voltage, neon/cold cathode.
- Phase-adaptive technology automatically selects leading-edge or trailing-edge dimming for low-voltage transformers.
- Up to 3 power modules may be controlled by a single dimmer (C5-BMJ- will control only 1 module).
- Use PHPM-WBX- models for 3-wire fluorescent dimmer input and PHPM-PA- models for 2-wire input.
- PHPM-WBX- models can be used in conjunction with BCI-0-10 for 0–10 V dimming applications. For more information, see Application Note #516 (Lutron P/N 048516) at www.lutron.com
- Models available for control voltage of 120 V~ only or 220–277 V~.
- Models available for load voltage of 120 V~ only or 120–277 V~.
- Compatible with 220/240 V~, non-CE systems. Contact Lutron for specific system applications.
- Not for use with non-dim loads.

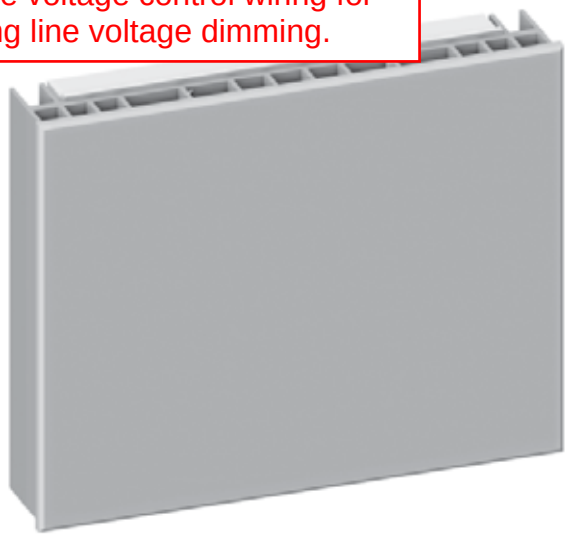

Works with 120 V~ or 220–277 V~ versions of:

- Lutron in-wall neutral wire dimmers; see approved list in the Dimmers and Switches Specification Guide (Lutron P/N 3671746) at www.lutron.com (see Lighting Load Interfaces section)
- GRAFIK Eye QS control units*
- LP, LCP, and GP dimming panels**
- HomeWorks QS remote power panels**
- HomeWorks QS in-line dimmer
- HomeWorks QS DIN-rail power modules
- EcoSystem interface C5-BMJ-XXX†
- Energi Savr Node PRO LED+ phase-adaptive fixture controller
- RadioRA 2 neutral wire dimmers; see approved list in the specification submittal (Lutron P/N 369225) at www.lutron.com
- HomeWorks QS neutral wire dimmers; see approved list in the specification submittal (Lutron P/N 369305) at www.lutron.com
- Caséta Wireless neutral wire dimmers; see approved list in the specification submittal (Lutron P/N 369987) at www.lutron.com
- Vive PowPak phase select dimming modules; see specification submittal (Lutron P/N 3691150) at www.lutron.com

*For PHPM-PA- models, set load type to “power module”.
**For PHPM-PA- models, set load type to “incandescent”.
†Use only PHPM-WBX models with this product; using PHPM-PA- models is not recommended

Models and Capacities

Control Voltage[1, 2]	Load Voltage[1, 2]	Load Capacity	Model Number[3, 4]
120 V~	120 V~	16 A	PHPM-PA-120-WH
120 V~	120–277 V~	16 A	PHPM-PA-DV-WH
220–277 V~	120–277 V~	16 A	PHPM-PA-277/DV
120 V~	120 V~	16 A	PHPM-WBX-120-WH
120 V~	120–277 V~	16 A	PHPM-WBX-DV-WH
220–277 V~	120–277 V~	16 A	PHPM-WBX-277/DV

[1] All voltages are phase-to-neutral.
[2] For explanation of “control voltage” and “load voltage”, see page 5.
[3] Use PHPM-PA- models for incandescent/halogen dimmers and set the controller load type to “power module” or “incandescent”.
[4] Use PHPM-WBX- models for 3-wire fluorescent dimmers and set the controller load type to “fluorescent”.

LUTRON SPECIFICATION SUBMITTAL Page 1

Job Name:	Model Numbers:	
Job Number:		

Specifications

Power

Control voltage	120 V∼ only	PHPM-PA-120-WH
		PHPM-PA-DV-WH
		PHPM-WBX-120-WH
		PHPM-WBX-DV-WH
	220–277 V∼	PHPM-PA-277/DV
		PHPM-WBX-277/DV
Load voltage	120 V∼ only	PHPM-PA-120-WH
		PHPM-WBX-120-WH
	120–277 V∼	PHPM-PA-DV-WH
		PHPM-PA-277/DV
		PHPM-WBX-DV-WH
		PHPM-WBX-277/DV

- Capacity: Full 16 A
  120 V∼: 1920 W
  120–277 V∼: 1920–4432 W
  220–240 V∼: 3520–3840 W
- Frequency: 50/60 Hz
- Load (output) power: Phase independent of control device/control voltage

Sources/Load Types

- Operates these sources with a smooth, continuous, Square Law dimming curve:
  - Incandescent (tungsten)
  - Halogen
  - Magnetic low-voltage transformer (iron core)
  - Electronic (solid-state) low-voltage transformer (must be manufacturer-approved for reverse-phase control dimming)
  - Neon/Cold cathode
- Incandescent and electronic low-voltage sources may be controlled on the same circuit/control zone. Up to 30% of the capacity of the unit can be used for incandescent lighting.
- Incandescent and magnetic low-voltage sources may be controlled on the same circuit/control zone. Up to 30% of the capacity of the unit can be used for incandescent lighting.
- Electronic low-voltage and magnetic low-voltage sources may NOT be controlled on the same circuit/control zone.
- PHPM-PA- and PHPM-WBX- models are not for use with non-dim loads. Use switching power module (PHPM-SW-DV-WH) for non-dim loads.
- Minimum load on power module is 10 W.
- Output must be directly connected to the load. Load side switching is not recommended.

Key Design Features

- Automatically selects between forward-phase/leading edge (e.g., magnetic low-voltage) and reverse-phase/trailing edge (e.g., electronic low-voltage) dimming/output based on connected load.
- Patented RTISS Equipped circuitry compensates in real time for incoming line voltage variations: Compensates for +/–2% change in RMS voltage/cycle and +/–2% Hz change in frequency/second.
- Provides air-gap off.
- Module protects itself during most temporary over-current and over-voltage conditions.
- Two LEDs on front of unit provide diagnostic information (visible when faceplate is removed).

Terminals

- Each terminal accepts up to two 12 AWG (2.5 mm^2) wires.

Environment

- 32 to 104 °F (0 to 40 °C). Relative humidity less than 90% non-condensing.
- Indoor use only.
- Maximum heat output of module: 135 BTU/hour.

Mounting

- Surface or recess mount.
- Power module is UL tested and approved for use in spaces designed for environmental air handling.

Regulatory Approvals

- Models: PHPM-PA-120-WH, PHPM-PA-DV-WH, PHPM-WBX-120-WH, PHPM-WBX-DV-WH
  - cULus® listed
  - NOM certified
  - RoHS compliant
  - Complies with requirements for use in other spaces used for environmental air (plenums) per NEC® 2014 300.22(C)(3).
- Models: PHPM-PA-120-WH, PHPM-WBX-120-WH
  - CSA certified
- Models: PHPM-PA-277/DV, PHPM-WBX-277/DV
  - UL
  - RoHS compliant
  - Complies with requirements for use in other spaces used for environmental air (plenums) per NEC® 2014 300.22(C)(3).

Specifications (continued)

⚠ **WARNING — Entrapment hazard —** May result in serious injury or death. These controls should only be used to control equipment which is visible from every control location.

⚠ **WARNING – Fire hazard –** May result in serious injury or death. Only use these controls to operate approved load and equipment types.

IMPORTANT NOTE:

Examples of such equipment which must not be operated by these controls include (but are not limited to) motorized gates, garage doors, industrial doors, microwave ovens, heating pads, fireplaces, space heaters, etc. It is the installer's responsibility to ensure that the equipment being controlled is visible from every control location and that only suitable equipment is connected to these controls. Failure to do so could result in serious injury or death.

Dimensions and Mounting

- Mount in 2-gang U.S. wallbox, 3.5 in (89 mm) deep or 4 × 4 in (102 × 102 mm) junction box, 2.1 in (53 mm) deep.
- For indoor use only.
- This device generates heat; mount only where ambient temperature is 32 to 104 °F (0 to 40 °C).
- Mount with arrows facing up to ensure adequate cooling.
- Allow 4.5 in (114 mm) above and below faceplates when mounting several modules in a vertical layout.
- Units may butt together when mounted in a horizontal layout.
- Mount so line (mains) voltage wiring is at least 6 ft (1.8 m) from sound or electronic equipment and wiring.
- Mount within 7° of true vertical.

Front View

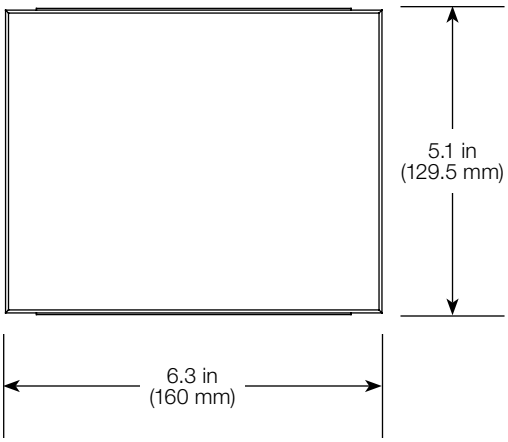

Side View

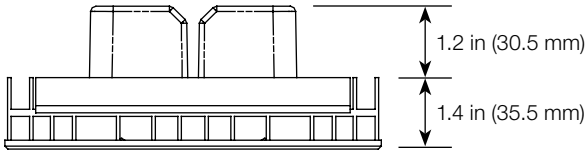

Mounting Methods

Mount to 2-gang U.S. wallbox

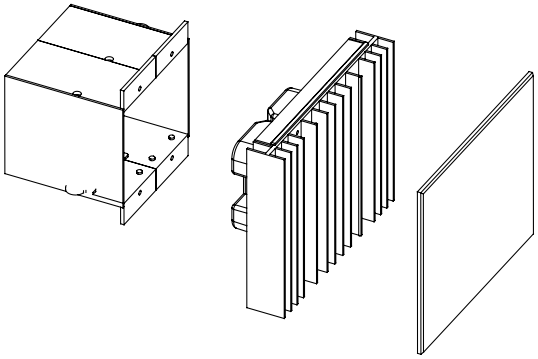

Mount to 4 × 4 in (102 × 102 mm), 2.1 in (53 mm) deep U.S. junction box

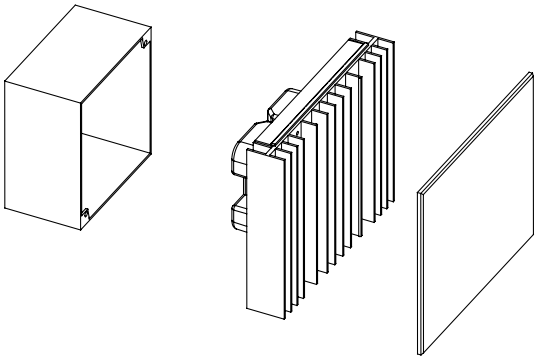

Mount to 4 × 4 in (102 × 102 mm), 2.1 in (53 mm) deep U.S. junction box with barrier
(for 277 V∼ loads if required by local electrical code)

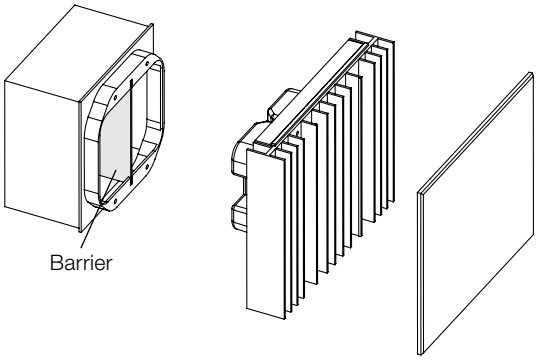

Wiring

- 12 AWG (2.5 mm^2) copper (Cu) wires (75 °C/167 °F minimum) for input power and load circuit.
- Strip 1/2 in (12 mm) insulation from wires before connecting.
- Run separate neutral for load circuit; no common neutrals.
- May be used with GFI breaker protected loads. Load circuit wiring (from GFI breaker to power module to load) must be run in its own non-metallic conduit, or nuisance tripping may occur. Maximum 100 ft (30.5 m) between power module and load.
- May be used with AFI breaker protected loads. Maximum load on AFI circuit is 1000 W. Exceeding 1000 W may cause nuisance tripping of AFI breaker.

Wiring to a Dimmer

Single Power Module to Single Control Device: Combined Power Feed for Control and Load Sides

- The power module may be on the same circuit/control zone as the control unit only if the total load does not exceed the rating of the breaker.
- Use PHPM-WBX- models for 3-wire fluorescent dimmers and PHPM-PA- models for other dimmer types.
- PHPM-PA-DV-WH and PHPM-WBX-DV-WH are included as 120 V~ only because of limits on zone-in voltages.
- For specific wire colors, see the wallbox lighting controls catalog (Lutron P/N 3691746) at www.lutron.com/wallbox

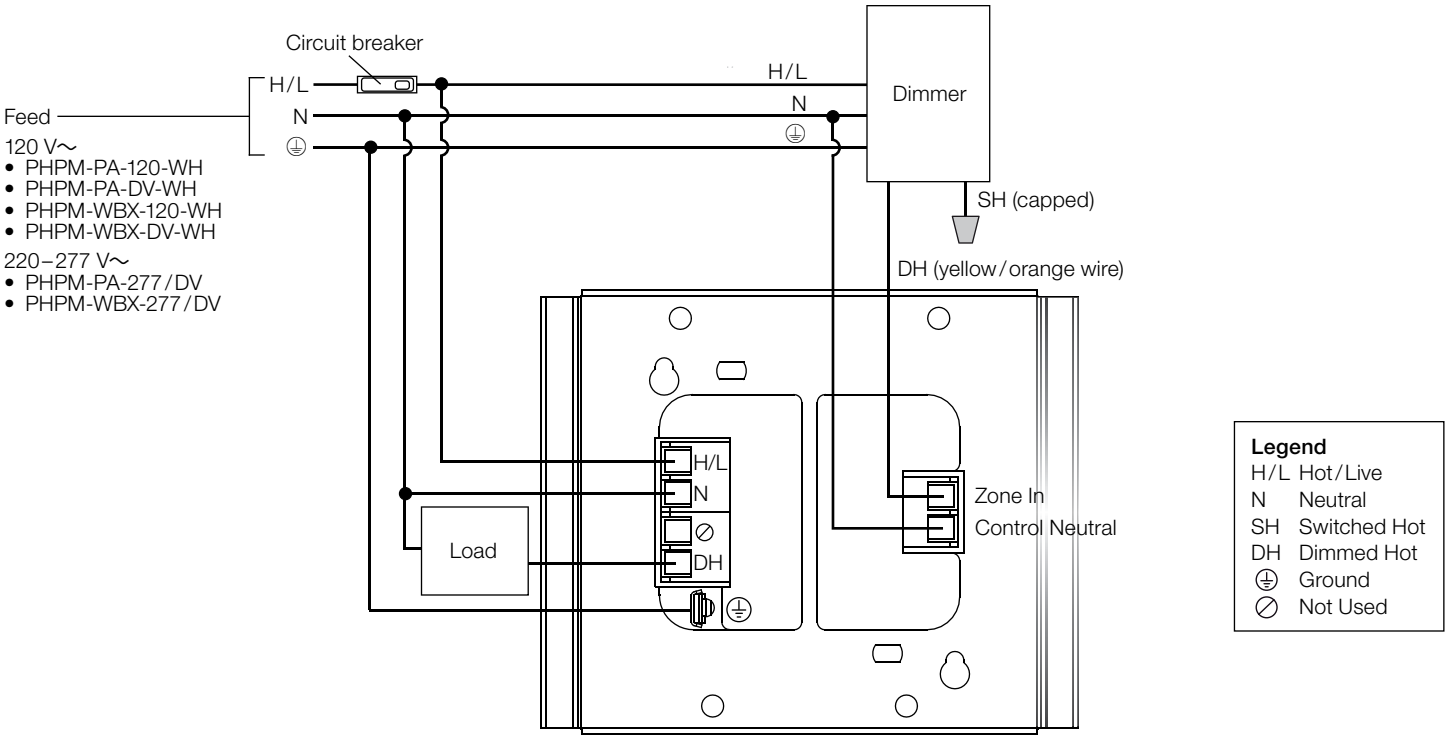

(continued on next page…)

Wiring to a Dimmer (continued)

Single Power Module to Single Control Device: Separate Power Feeds for Control and Load Sides

- The load breaker may be on a different phase from the control breaker.
- Use PHPM-WBX- models for 3-wire fluorescent dimmers and PHPM-PA- models for other dimmer types.
- Load feed must not exceed voltage rating of the load[1]; control feed must not exceed voltage rating of the dimmer[2].
- For specific wire colors, see the wallbox lighting controls catalog (Lutron P/N 3691746) at www.lutron.com/wallbox

[1] "Load feed" and "load voltage" refer to the circuit powering the load dimmed by the power module.
[2] "Control feed" and "control voltage" refer to the circuit powering the dimmer that controls the power module.

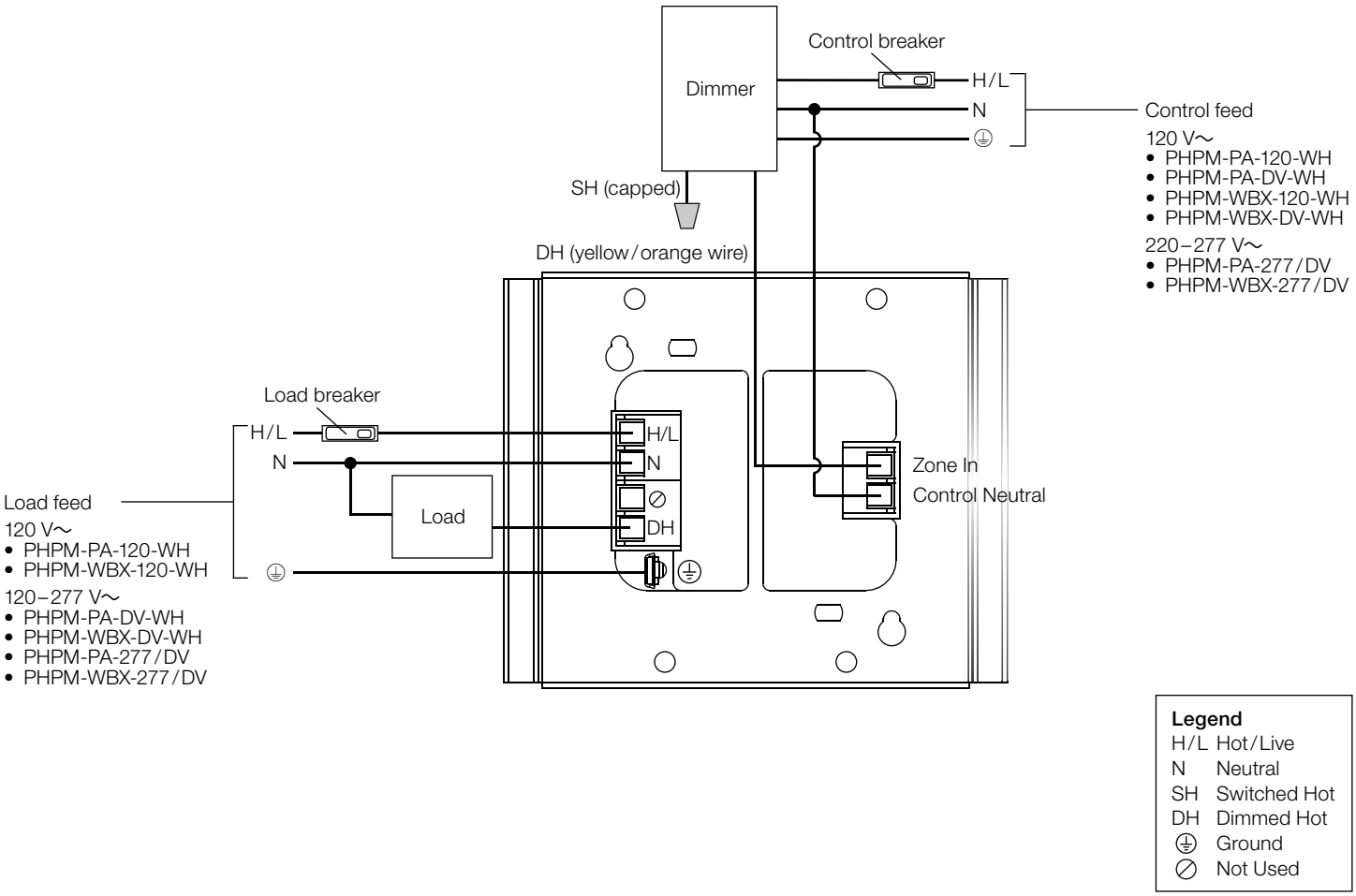

(continued on next page…)

Wiring to a Dimmer (continued)

Multiple Power Modules to Single Control Device

- Shown with separate feeds for control and loads. All breakers must be turned off prior to installing or servicing the modules. Up to 3 power modules may be wired to a single dimmer.
- Use PHPM-WBX- models for 3-wire fluorescent dimmers and PHPM-PA- models for other dimmer types.
- Load feed must not exceed voltage rating of the load; control feed must not exceed voltage rating of the dimmer.
- For specific wire colors, see the wallbox lighting controls catalog (Lutron P/N 3691746) at www.lutron.com/wallbox

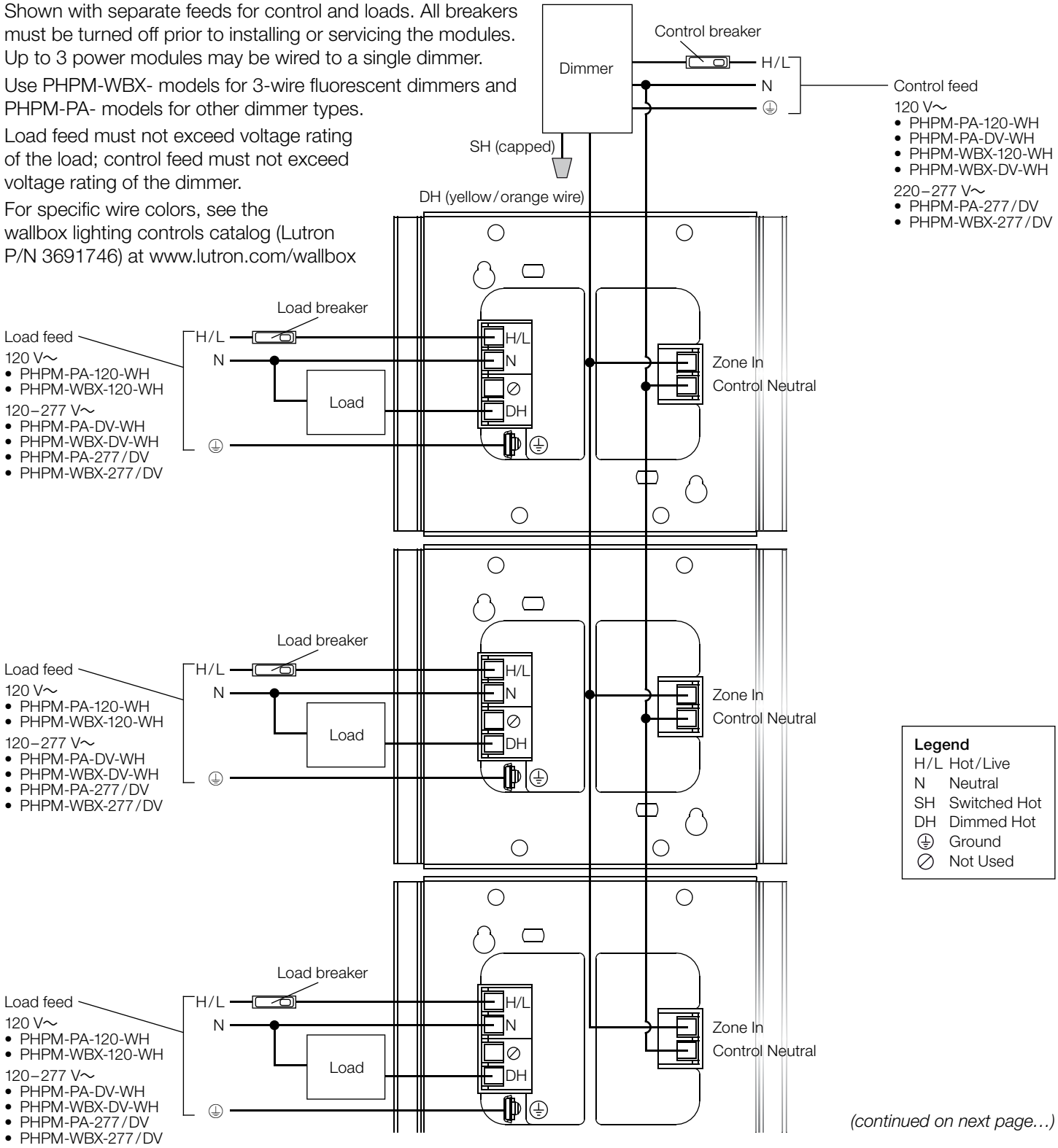

(continued on next page…)

Wiring to a Dimmer (continued)

Single Power Module to Multiple Control Devices

- The power module may be on the same circuit / control zone as the control unit only if the total load does not exceed the rating of the breaker.
- Use PHPM-WBX- models for 3-wire fluorescent dimmers and PHPM-PA- models for other dimmer types.
- Load feed must not exceed voltage rating of the load; control feed must not exceed voltage rating of the dimmer.
- For specific wire colors, see the wallbox lighting controls catalog (Lutron P/N 3691746) at www.lutron.com/wallbox

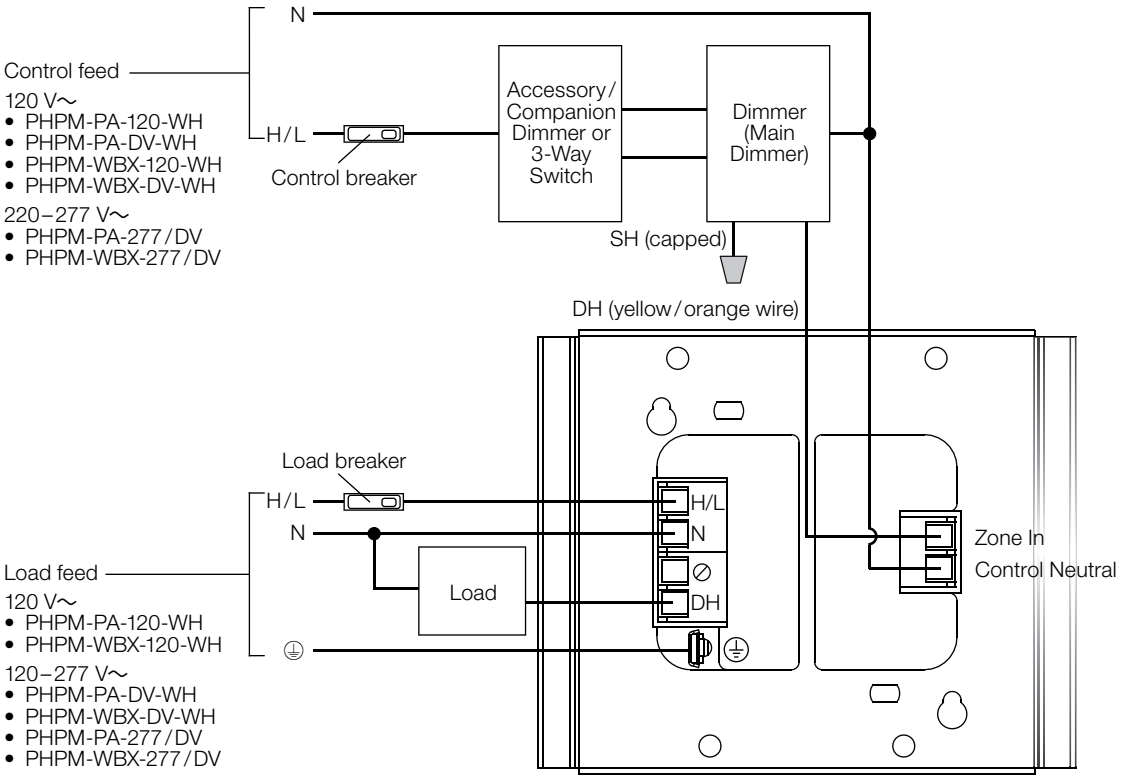

Legend

H / L	Hot / Live
N	Neutral
SH	Switched Hot
DH	Dimmed Hot
⏚	Ground
⊘	Not Used

Wiring to a GRAFIK Eye QS

Single Power Module to Single Control Device: Separate Power Feeds for Control and Load Sides

- The load type for the output must be set appropriately on the panel's circuit selector (for an LP or GP panel), on the controller (for an LCP panel), or in the HomeWorks software (for a HomeWorks panel).
  - For PHPM-PA- models, set load type to "incandescent".
  - For PHPM-WBX- models, set load type to "fluorescent".
- Load feed must not exceed voltage rating of the load; control feed must not exceed voltage rating of the dimmer.
- For specific wire colors, see the wallbox lighting controls catalog (Lutron P/N 3691746) at www.lutron.com/wallbox

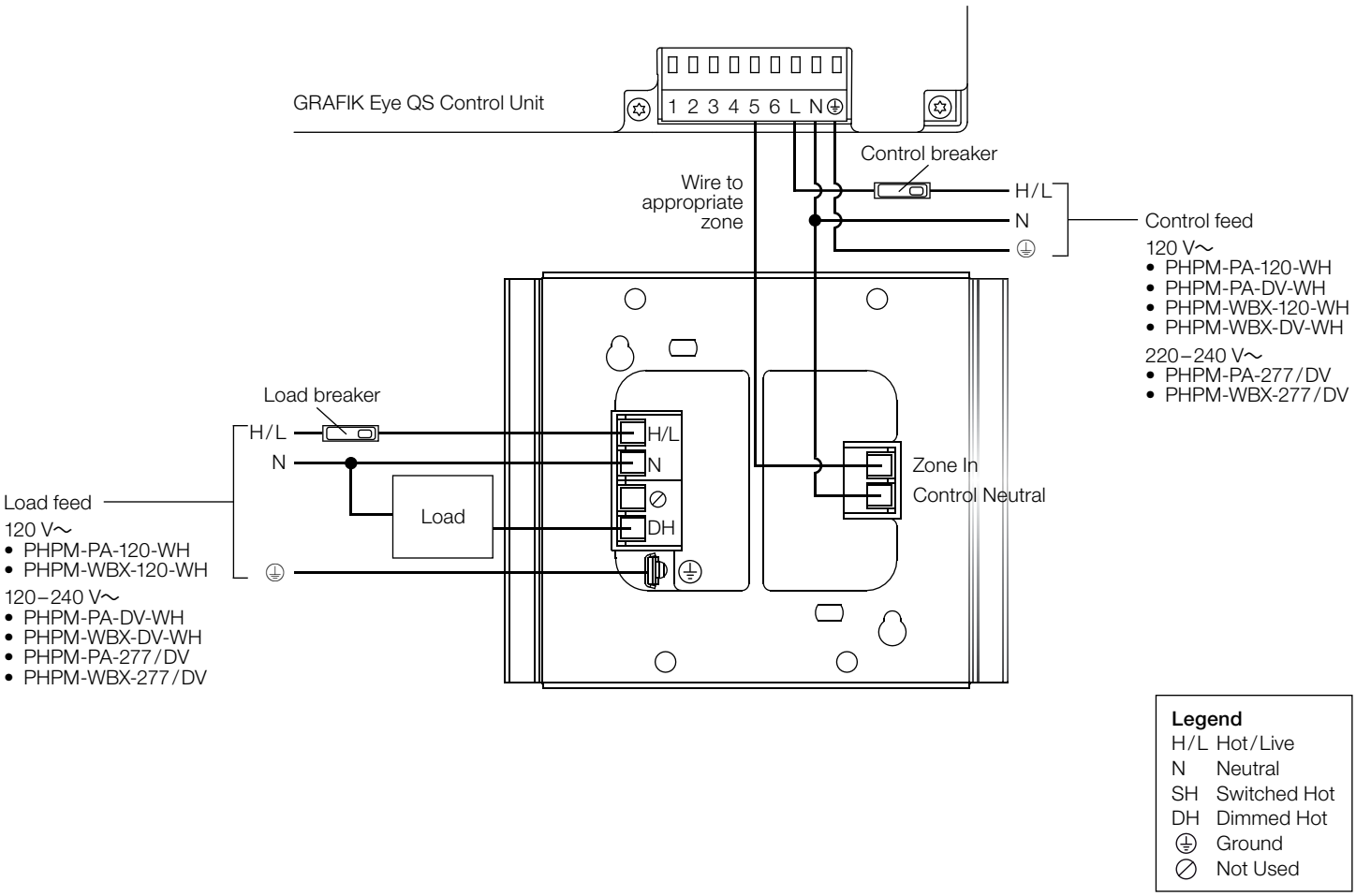

369835j 10 01.10.2024

Wiring to an EcoSystem C5-BMJ Interface (for PHPM-WBX- models only)

Single Power Module to Single Dimming Module: Separate Power Feeds for Control and Load Sides

- The load breaker may be on a different phase from the control breaker.
- Use PHPM-WBX- models only.
- Load feed must not exceed voltage rating of the load.
- For specific wire colors, see the wallbox lighting controls catalog (Lutron P/N 3691746) at www.lutron.com/wallbox

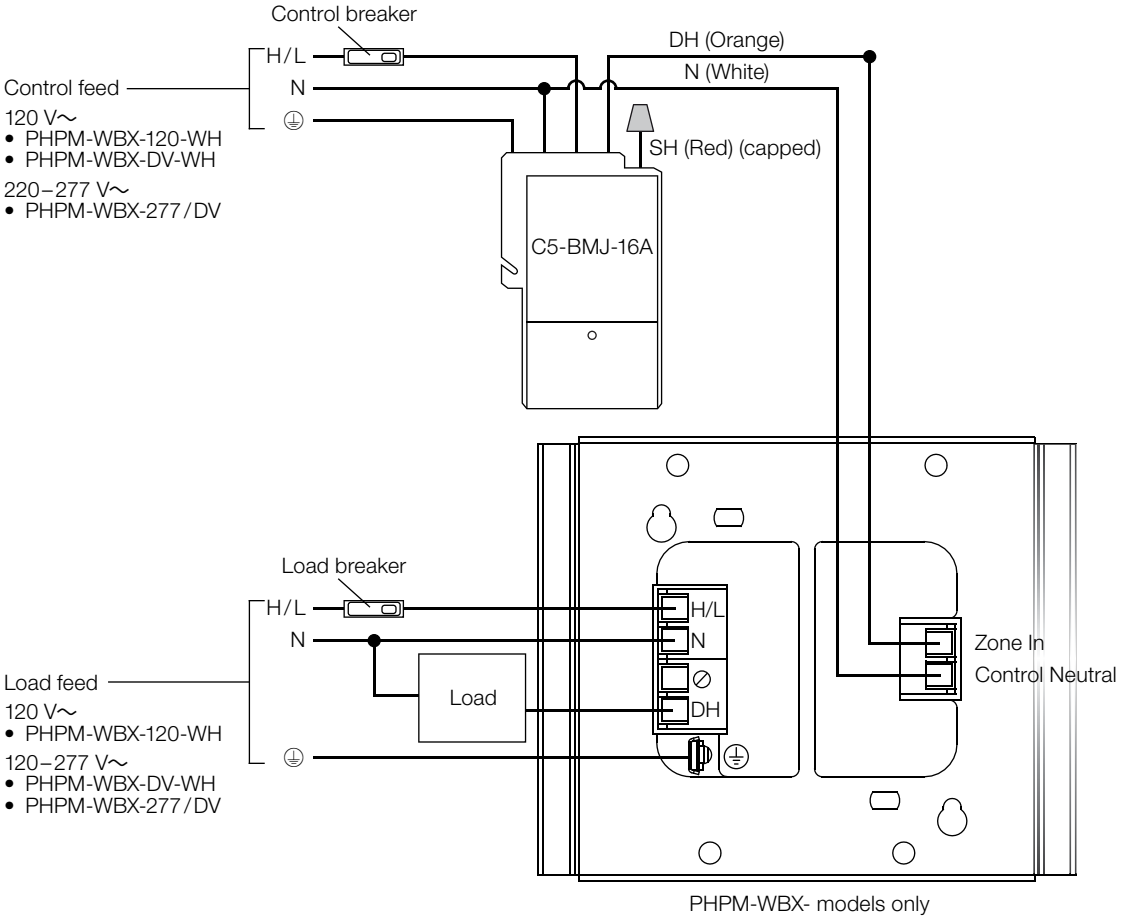

Legend

H/L	Hot/Live
N	Neutral
SH	Switched Hot
DH	Dimmed Hot
⏚	Ground
⊘	Not Used

Job Name:	Model Numbers:	
Job Number:		

369835j 11 01.10.2024

Wiring to an LP, GP, LCP, or HomeWorks Panel

Single or Multiple Power Modules to Single Power Panel

- The load type for the output must be set appropriately on the panel's circuit selector (for an LP or GP panel), on the controller (for an LCP panel), or in the HomeWorks software (for a HomeWorks panel).
  - For PHPM-PA- models, set load type to "incandescent".
  - For PHPM-WBX- models, set load type to "fluorescent".
- Load feed must not exceed voltage rating of the load.
- For specific wire colors, see the wallbox lighting controls catalog (Lutron P/N 3691746) at www.lutron.com/wallbox

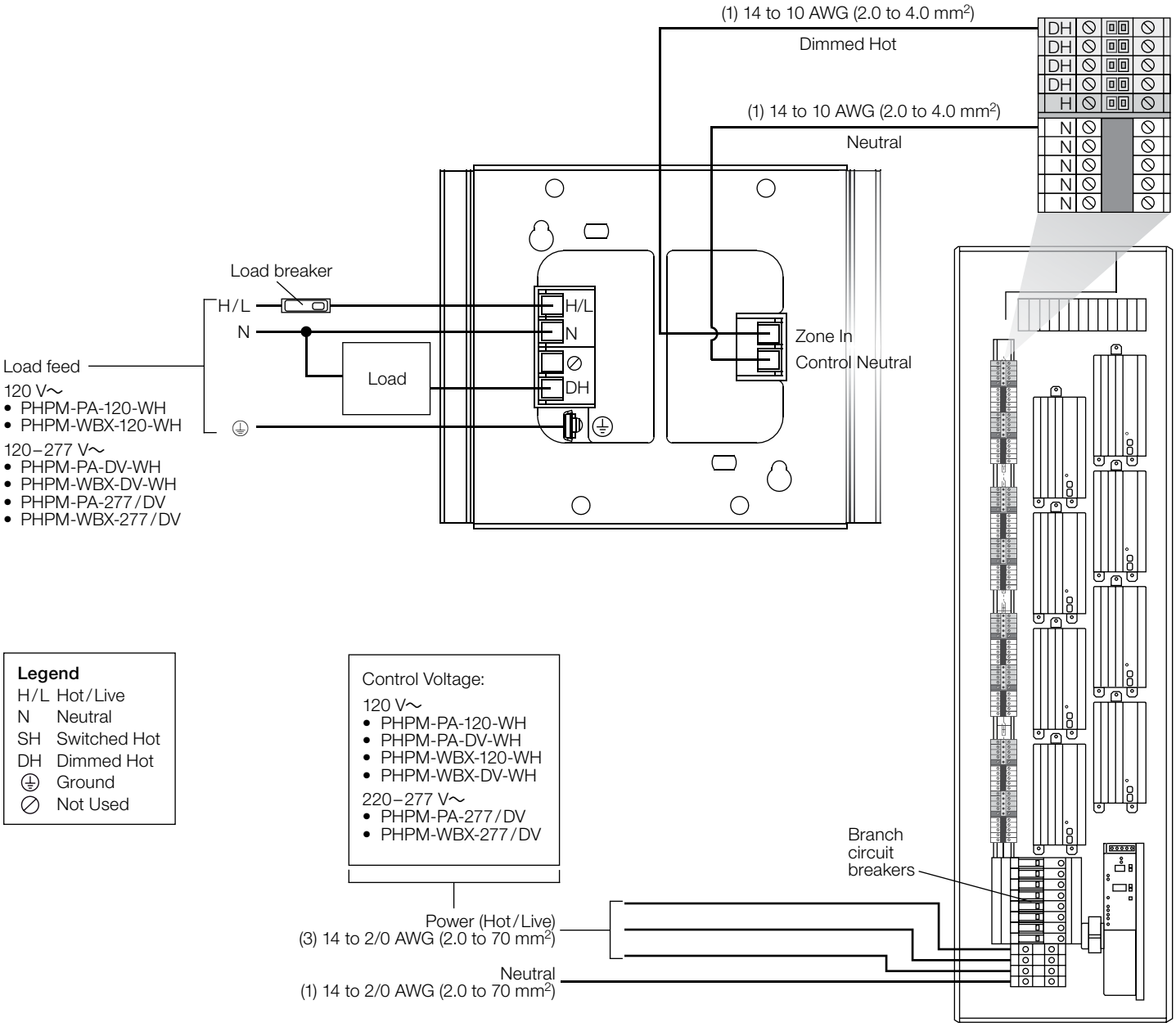

Lutron, the Lutron logo, GRAFIK Eye, HomeWorks, EcoSystem, RadioRA, RadioRA 2, Energi Savr Node, LED+, and RTISS Equipped are trademarks or registered trademarks of Lutron Electronics Co., Inc. in the US and/or other countries. All other product names, logos, and brands are property of their respective owners.

Job Name:	Model Numbers:	
Job Number:		

Wiring to an Energi Savr Node PRO LED+ Phase Adaptive Fixture Controller

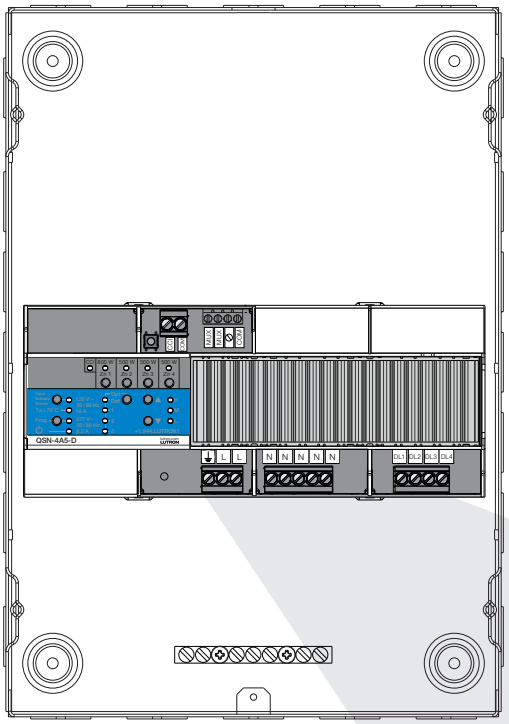

Single or Multiple Power Modules to Single Power Panel

- The load type for the output must be set appropriately.
  - For PHPM-PA- models, set load type to “forward-phase”.
- Load feed must not exceed voltage rating of the load.
- Not Compatible with PHPM-WBX- models.
- Up to three power modules may be wired to an output.

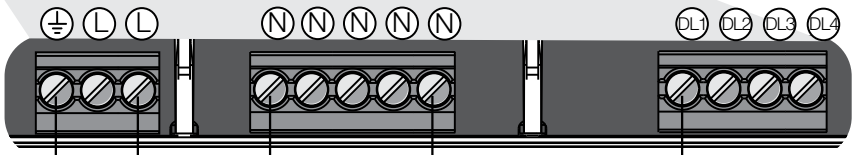

Control Voltage:

120 V~
- PHPM-PA-120-WH
- PHPM-PA-DV-WH

277 V~
- PHPM-PA-277/DV

Control Feed (120/277 V~)

L/H

N

N

DL

Load breaker

L/H

N

Load feed

120 V~
- PHPM-PA-120-WH

277 V~
- PHPM-PA-DV-WH
- PHPM-PA-277/DV

Lighting Loads

L/H
N
DL

Zone In
Control
Neutral

Legend

L/H	Line/Hot
N	Neutral
DL	Dimmed Line
⏚	Earth/Ground
⊘	Not Used

Job Name:	Model Numbers:	
Job Number:		

369902v 1 07.24.23

Vive Wireless Hub

The Vive hub provides a connection point for Lutron Vive devices such as PowPak wireless dimming and switching modules, PowPak Wireless Fixture Controllers, PowPak 20 A Relay Modules, Maestro Wireless dimmers and switches, Wireless Receptacle controls, Pico remote controls, Radio Powr Savr occupancy sensors, and daylight sensors. For a complete list of compatible devices, see the last page of this document.

For more information on the Vive hub, including training materials, design information and software updates, please visit www.lutron.com/vive

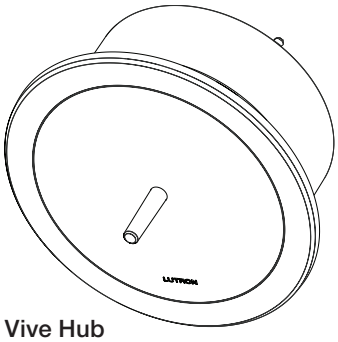

Vive Hub

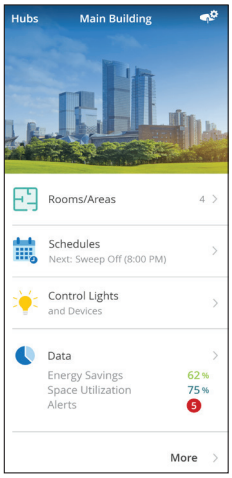

Vive Hub Dashboard

Provide and install equipment shown for time clock and lighting control system for gym lighting in place of Wattstopper Relay Control panel.

Features

- Can be easily programmed with any Wi-Fi enabled iOS® or Android® compatible device using the free Lutron Vive app (available for download from the *App Store* or Google Play®) or by using web-based software.
- iOS® and Android® Apps – Helper apps act as an intermediary between Vive systems and the Lutron Cloud without the need of a permanent internet connection. It connects to hubs when on-site and passes data back and forth when the smart device reconnects to the Internet. Visit www.lutron.com/VivePrivacyNotice for more about this data.
  - Registration of jobs/users for extended warranty.
  - Manage multiple jobs with contacts and job info.
  - Invite facility users to have access to hubs/job.
  - Automatically send handoff documentation personalized to your firm to facility management team. Including programming user guide, online "How-to" videos, and support number.
  - Connection to hub browser user interface for setup. Normal web browser still works and the app is not required.
  - Connection to hub browser dashboard for control and monitor. Normal web browser still works and the app is not required.
  - Backup the database to the Lutron Cloud for hub replacement.
  - Download reports that list the inventory of hubs and devices commissioned in your job.
- Communicates with controls on a floor using Lutron wireless Clear Connect technology.
- Distributed system architecture.
  - Wireless sensors and controls must be located within 60 ft (18 m) line of sight, or 30 ft (9 m) through walls, of the associated device.
- Supports timeclock events based on both sunrise and sunset or fixed time-of-day.
- Timeclock events can control individual devices, areas, or groups of areas.
  - Note: This feature is not available once a hub is paired with a Vive Vue server.
- Uses Lutron RF signal strength measurements to find devices nearby for quick association and programming without having to climb ladders.
- Dashboard of current status for control and monitoring of the system. Also shows current energy usage.
- Integrated multi-color LED provides feedback on what mode the hub is in.
- Connects directly to any smartphone, tablet or computer using built in Wi-Fi. 2.4 GHz 802.11b/g. using WPA2 Security.
- Each hub presents a dashboard of devices and areas which it controls.
- If all the hubs on a job are networked using Ethernet, you can easily navigate from one hub to another to view its dashboard.

continued on next page . . .

Job Name:	Model Numbers:	
Job Number:		

Features ***(continued)***

- Ethernet 10/100 Mbps connection for:
  - Native BACnet®/IP (see Lutron P/N 369996 at www.lutron.com for PIC Statement) integration into Building Management Systems (HJS-2-XX only). The Vive Hub has been tested by BACnet® Testing Laboratories (BTL) and is certified to comply with all necessary interoperability requirements.
  - Network multiple Vive hubs together as an independent system or as part of an existing building network.
  - Native OpenADR® support, to manage Automatic Demand Response/Load Shed events dictated by a utility company.
  - Each Vive hub hosts a unique virtual BACnet® network. As such, each Vive hub requires a unique BACnet® network number.
- Firmware upgradable for future features and security patches.
- Password protected access.
- Flush-mount or surface-mount options available.
- Supported on most devices that use an HTML5 compliant browser (iOS®, Android®, Windows®, *Mac*).
- Required browsers are Google® Chrome® and *Safari*.
- Supports HTTPS.
- Recommended configurations for smart devices:

Device	OS Version
iPhone 6, *iPhone* 6 plus or newer	iOS® 11.0 or later
Supported on most Android® devices running Android® 6.0 or later.	Android® 6.0 or later

- Daylighting Setpoint Tweaking – If the lights are too bright or too dim while using daylighting, adjust the settings in real time from a smart device to alter the setpoint for the light level that is maintained between natural and electric light. Older devices (released prior to September 2017) can be adjusted but may take a minute to reach desired level because of a of slow fade. New devices will respond immediately.
- Daylighting-to-Low-End or Daylighting-to-Off - The Vive system will allow the user to select either daylighting-to-low-end or daylighting-to-off on an area by area basis.
  - Requires Vive hub software 01.08 or higher.
- Customer Supplied Security Certificates
  - Provides customers the abiltiy to load their own authentication certificates for their specific domain.
  - Provides customers using the Vive hub application to use secure browser communications without receiving any authentication warnings due to the self-signed certificates that are shipped with the hubs.
  - Requires Vive hub software 01.08 or higher.
- Timeclock Occupancy Sensor Settings Changes
  - Requires devices shipped after September 2017. Devices shipped prior to that date will be displayed as "unsupported" in the software UI. Allows timeclock events to change the behavior of occupancy settings based on time of day. For example, change the unoccupied level of corridors/hallways from 25% during the day, and off at night. The following settings can be changed:
  - Occupied Level – The level the lights go to when occupied. Changes are not applied immediately to currently occupied spaces, but will change the next time the space goes occupied to minimize distraction.
  - Unoccupied Level – The level the lights go to when unoccupied. Changes are applied immediately to spaces not currently occupied.
  - Enable/Disable Occupancy – Change whether devices will respond to the occupancy sensor.
  - Timeout of the sensors (requires FC-VSENSOR). LRF2 sensors still require this setting to be set on the sensor.
- 365-day schedulable timeclock with exceptions for holidays.
  - Allows scheduling events 10 years in advance.
  - Set recurring events with exceptions on holidays.
  - Allows scheduling events on specific day of the year.
- Measured energy data for PowPak Wireless Fixture Control accurate to ±2% or 0.5 W, whichever is higher.
- Measured energy data is available for the Vive Integral Fixture Control when paired with a driver that supports measured power. See Lutron specification submittal (P/N 3691039) at www.lutron.com for more information.
- Provides calculated energy data for PowPak modules and Maestro dimmers or switches.
- Create and edit areas.

Features ***(continued)***

- Tune area light levels by trimming the high-end and low-end output to save energy.
- Adjust occupancy settings. Create occupancy groups.
- Can extend the RF range of up to 15 Pico remote controls per Vive hub. These remotes can be set up to control any device within the 71 ft (22 m) range of that Vive hub.
- RF range of occupancy sensors can be extended for up to 14 areas per Vive hub. In a range extended area, an occupancy sensor can control any device in that area, regardless of distance between sensor and device. Requires Vive hub software 01.09 or higher.
- Configurable Fade Time
  - Up to 90 minutes for timeclock events and scenes.
    - Limited to 90 seconds for FCJS-ECO, FCJS-ECO-EM, RMJS-ECO32-SZ, DFCSJ-OEM-RF, and DFCSJ-OEM-OCC devices.
    - NOTE: This feature is not available once a hub is paired with a Vive Vue server.
  - Up to 90 seconds for Pico remote control programming.
    - Fade time may differ between buttons on the same Pico remote control.
    - Single fade time applies to all programming for a button.
- Automatic Demand Response/Load Shed
  - Load Shedding will physically dim the lights to a programmable level to help meet the requirements for the California Title 24 Building Energy Efficiency Standards–Automatic Demand Response.
  - OpenADR® 2.0b compliant (requires Vive hub software 01.09 or higher).
  - May be enabled (or disabled) via any of the following methods:
    - The first contact closure input (CCI 1)
    - BACnet® integration
    - OpenADR® integration
  - OpenADR® requires access to utility companies over the Internet, so the hub must be connected via Ethernet to use OpenADR®.
- Alerts
  - View run-time issues which may prevent devices from operating as expected, such as low batteries or missing devices.
- API Integration
  - To integrate with third-party devices, systems, and software, RESTful APIs are available over the Ethernet.
- Scenes
  - Scenes can control individual devices, areas, or groups of areas on demand.
  - May be activated via any of the following methods:
    - The second contact closure input (CCI 2)
    - API integration
    - Manual activation in the app
  - Maximum of 50 scenes are supported.
  - Requires Vive hub software 01.13 or higher.
- Override and lockout support for the emergency devices.
  - Activate override and lockout manually, using LUT-ELI-3PH or with an integration device such as a fire alarm. This will send the emergency lights to the defined levels and lock out the controls (Pico remotes and sensors) in the case of a fire alarm or security incident.
  - May be activated via any of the following methods:
    - The second contact closure input (CCI 2)
    - API integration
    - Manual activation in the app
  - Supports all red-label emergency PowPak devices.
  - Requires Vive hub software 01.13 or higher.

  Note: Vive hub has been evaluated by UL for use in emergency lighting systems in accordance with standard UL 924 when paired with the LUT-ELI-3PH Emergency Lighting Interface. Requires Vive hub software 01.13 or higher.
- Programmable CCI
  - The second contact closure input (CCI 2) can be programmed to activate a scene or override and lockout emergency devices in case of a fire alarm.
  - Scene activation
    - Set a scene to activate using the second contact closure input (CCI 2) on the Vive hub.
  - Override & Lockout support activation (fire alarm, security incident)
    - Provides the ability to command all red-label emergency load controllers to programmable light levels and lockout the controls.
  - Requires Vive hub software 01.13 or higher
- Occupancy Dependency
  - Occupancy sensors in one room/area can control devices in other rooms/areas.
  - Radio Powr Savr occupancy sensors and Maestro Wireless 0–10 V⎓ dimmers and switches with sensor only.
  - Requires Vive hub software 01.14 or higher
- Manually select dimming module phase in the app (supported devices only).

Specifications

Regulatory Approvals

- cULus Listed
- FCC approved. Complies with the limits for a Class B device, pursuant to Part 15 of the FCC rules.
- IC
- COFETEL
- NOM

Power/Performance

- Input to power supply:
  120 – 277 V~ 50/60 Hz 0.6 A
- Input to Vive hub:
  24 V⎓ 350 mA

System Limits

- HJS-1, HJS-2 support up to 700 Lutron Wireless devices. HJS-0 supports 75 Lutron Wireless devices. Devices must be located within 71 ft (22 m) of the Vive hub.
- Any given load device can be controlled by 10 occupancy sensors, 10 Pico remote controls and 1 daylight sensor (Pico remote controls and sensors must be located within 30 ft [9 m] of the load device they are controlling).

Mounting

- Vive hub units should be mounted in the middle of non-metal ceiling tile or drywall, visible from inside the space.
- Installation near metal, other than a junction box, may reduce RF range. Hub should be at least 12 in (305 mm) away from metal objects.
- Use surface-mount version for mounting to a hard or cement ceiling.
- Power supply mounts to a standard 4 in x 4 in (101 mm x 101 mm) square junction box.
- Power supply must be mounted within 100 ft (31 m) of the Vive hub. Wiring should be 24 AWG to 12 AWG (0.2 mm^2 to 2.5 mm^2).

Environment

- For indoor use only.
- 32 to 104 °F (0 to 40 °C).
- Relative humidity less than 90% non-condensing.

Contact Closure Input Terminals

- First contact closure input (CCI 1) is to be used for initiating load shed only. Load shedding will physically dim the lights to a programmable level to help meet the requirements for The California Title 24 Building Energy Efficiency Standards Automatic Demand Response.
- The second contact closure input (CCI 2) may be programmed to activate an emergency or scene. If activating a scene, a "deactivation" behavior may be set in the scene in order to set two behaviors for the one input.
- Accepts only maintained inputs.
- Off-state leakage current must be less than 100 µA.
- Open circuit voltage: 24 V⎓ maximum.
- Input wiring: 24 AWG to 12 AWG (0.2 mm^2 to 2.5 mm^2).
- Contact Closure Inputs on multiple hubs can be wired in parallel. **DO NOT** wire inputs in parallel with other equipment as it can cause the inputs on either of the devices to falsely trigger.
- Up to 4 hubs in parallel.
- To ensure proper operation of Contact Closure Inputs, a PS-J-20W-UNV power supply may not be used to provide power to more than one hub.
- Inputs must be dry contact closure, solid state, open collector, or active-low (NPN)/active high (PNP) output.
  - Open collector NPN or active-low on-state voltage must be less than 2 V⎓ and sink 3.0 mA.
  - Open collector PNP or active-high on-state voltage must be greater than 12 V⎓ and source 3.0 mA.

Programming

- The Vive hub is meant to be permanently installed. It is **NOT** intended to be used as a programming tool that can be removed from the site after commissioning. Various Vive system features are dependent on the hub for proper functionality. In addition, users and other maintainers will be forced to recommission the entire system in order to make simple changes or additions if the hub is not installed on-site as part of the commissioned system.

Warranty

- 1 year limited warranty. The customer can register the product to increase the warranty period from 1 year to 5 years. Please visit www.lutron.com/TechnicalDocumentLibrary/369-119_Wallbox_Warranty.pdf for warranty details.

369902v 5 07.24.23

How to Build a Model Number

Example

HJS – 1 – FM

Frequency
Type
Mounting

Frequency Band

J = 433.05–434.79 MHz

Type

0 = Starter Vive hub without BACnet® limited to 75 devices (Available as HJS-0-FM only)
1 = Vive hub without BACnet®
2 = Premium Vive hub with BACnet®

Mounting

FM = Flush-Mount (non-metal ceiling tiles or drywall)
SM = Surface-Mount (cement)

Available Vive Hub Model Numbers (includes power supply and mounting adapter)

HJS-0-FM - Starter hub, flush-mount adapter and power supply
HJS-1-FM - Vive hub, flush-mount adapter and power supply
HJS-1-SM - Vive hub, surface-mount adapter and power supply
HJS-2-FM - Premium Vive hub, flush-mount adapter and power supply
HJS-2-SM - Premium Vive hub, surface-mount adapter and power supply
HJS-UPDATE - Software upgrade license to add BACnet to HJS-0 and HJS-1 hubs
HJS-DEVICES - Software upgrade license expands device limit to 700 devices for HJS-0 hubs

Replacement Part Model Numbers

PS-J-20W-UNV	Vive hub external power supply
H-MOUNT-FM	Flush-mount installation adapter
H-MOUNT-SM	Surface-mount installation adapter

Ethernet Switch Model Numbers (sold separately)

All switches are unmanaged 10/100/1000 Mbps. This IT gear is a suggested list. IT provided gear that is equivalent or better is sufficient. Enterprise level gear recommended.

ETH-SWITCH-16	16 port
ETH-SWITCH-24	24 port
ETH-SWITCH-24-1M	24 port, 1 multi-mode fiber
ETH-SWITCH-24-2M	24 port, 2 multi-mode fiber
ETH-SWITCH-24-1S	24 port, 1 single-mode fiber
ETH-SWITCH-24-2S	24 port, 2 single-mode fiber

Dimensions

Dimensions are shown as: in (mm)

Vive Hub

Top View

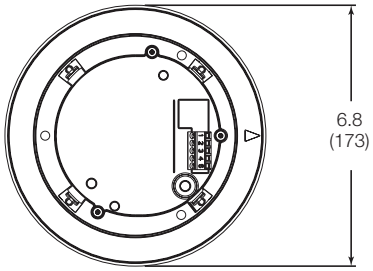

Side View

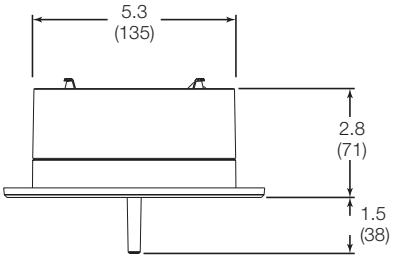

Flush-mount Adapter

Top View

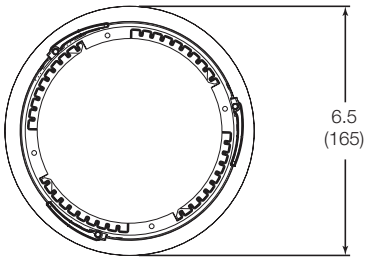

Side View

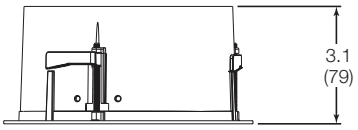

Flush-mount Adapter Details

- Requires a 6 in (153 mm) hole to be cut in the ceiling for mounting.

Surface-mount Adapter

Top View

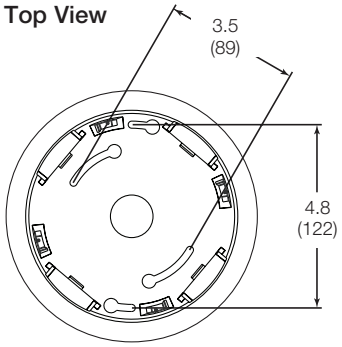

Side View

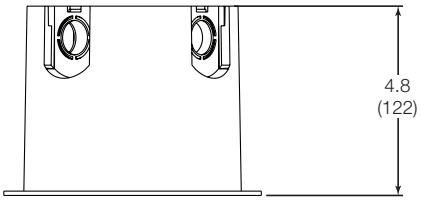

Surface-mount Adapter Details

- Knockouts for 1/2 in or 3/4 in (13 mm or 19 mm) conduit.

Power Supply

Top View

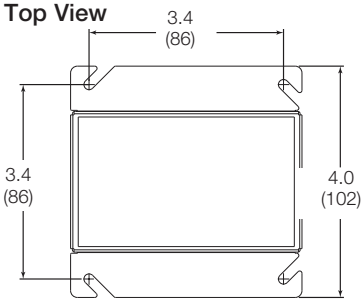

Side View

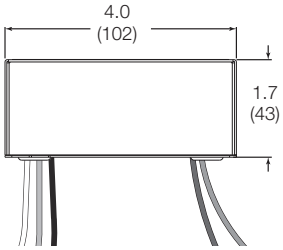

Range Diagrams

All wireless devices to be associated to the Vive hub must be within 71 ft (22 m) of the Vive hub and must be on the same floor as the Vive hub.

Note: Vive hubs should be mounted greater than 10 ft (3 m) apart on the same floor.

Note: A corporate Wi-Fi network can interfere with the Wi-Fi on the Vive hub. Where a corporate Wi-Fi network exists, it is recommended to do the following:

- Connect the Vive hub to the corporate network using the Ethernet connection on the hub and disable Wi-Fi on the hub.

Note: Vive hubs should be mounted greater than 10 ft (3 m) from a Wi-Fi router or access point.

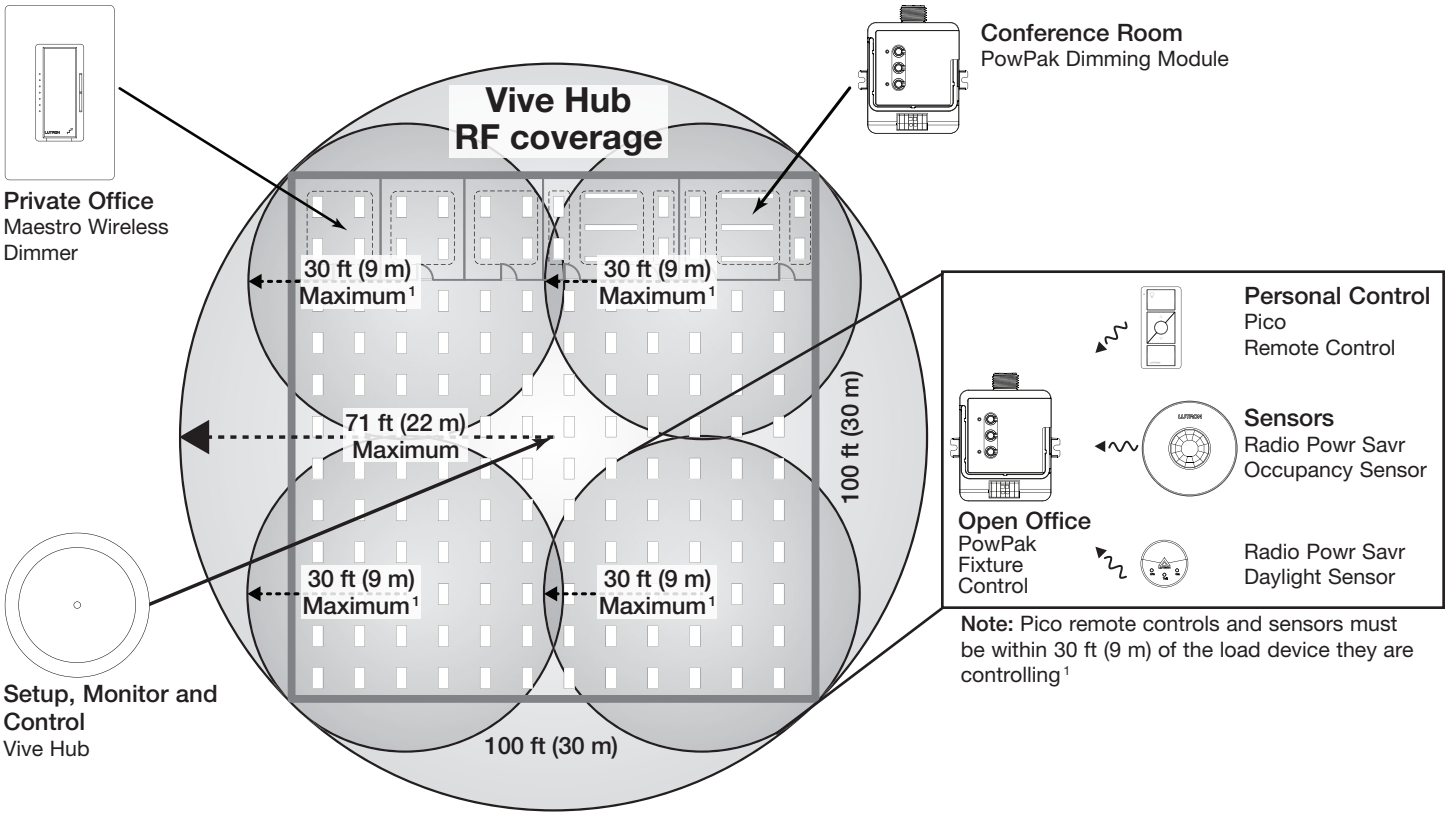

[1] Wireless sensors and controls must be located within 60 ft (18 m) line of sight, or 30 ft (9 m), through walls, of the associated device.

Range with multiple Vive hubs

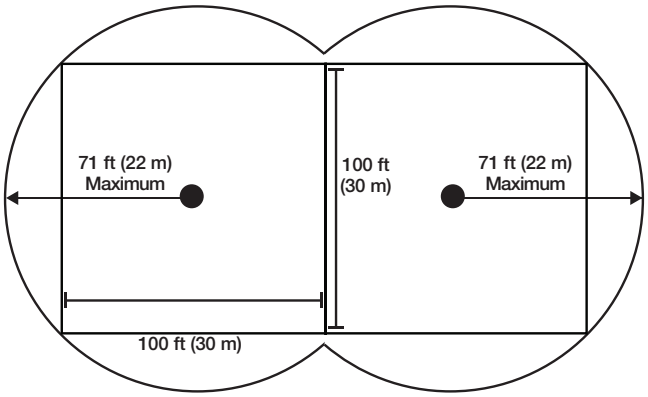

Wiring

Product Overview
(Flush-mount adapter)

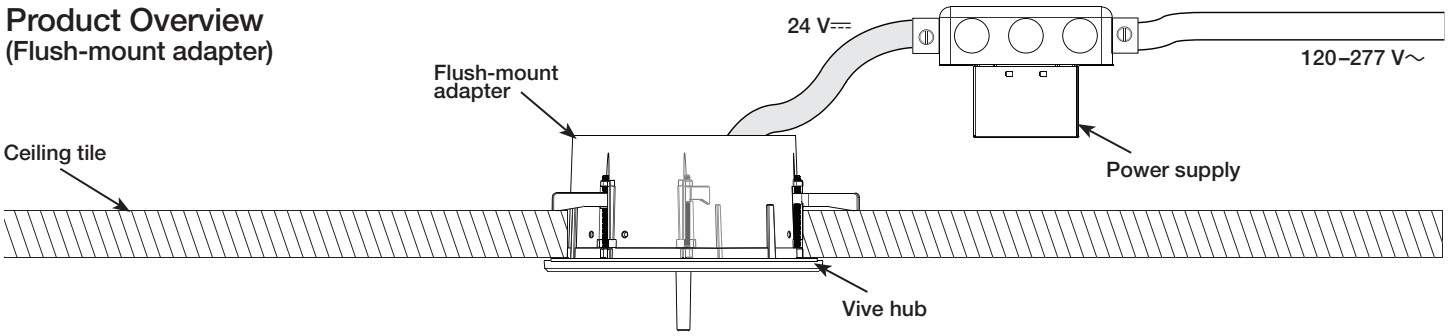

See Lutron Application Note #628 (P/N 048628) at www.lutron.com for information on wiring Emergency Lighting with a Vive System.

Product Overview
(Surface-mount adapter)

Note: For Chicago plenum space applications the power supply has a metal enclosure and can be mounted in the plenum space. The Vive hub cannot be mounted in the plenum space and needs to be mounted outside the plenum space on the surface of the ceiling.

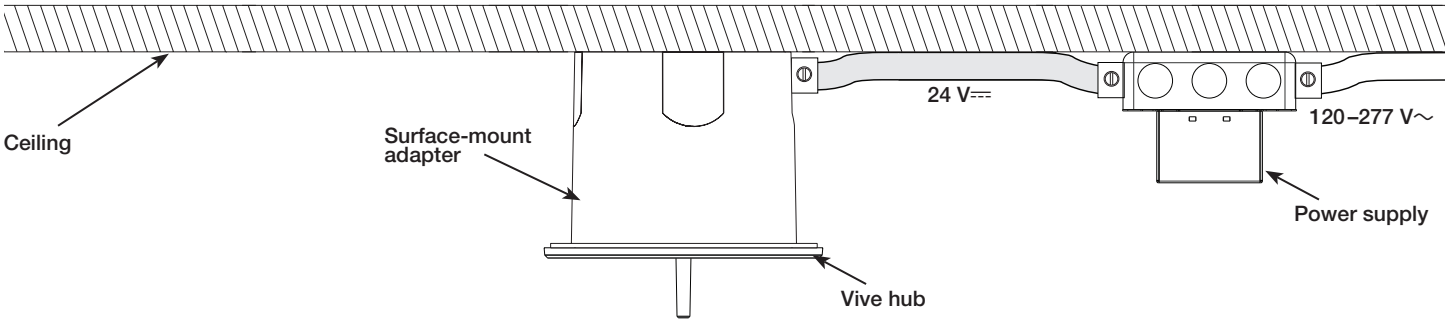

Vive Hub

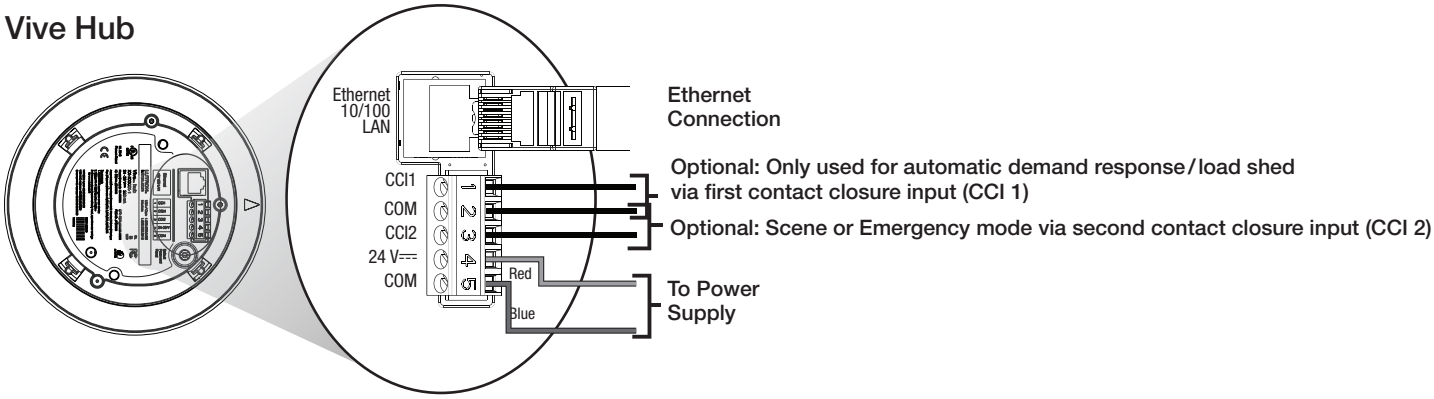

Vive Security Statement

Lutron takes the security of the Vive Lighting Control System very seriously.

The Vive Lighting Control System has been designed and engineered with attention to security since its inception. Lutron has engaged security experts and independent testing firms throughout the entire development of the Vive Lighting Control System. Lutron is committed to security and continuous improvement throughout the Vive product lifecycle.

The Vive Lighting Control System uses a multi-tiered approach to security and National Institute of Standards and Technology (NIST) recommended techniques for security.

They include:

1. An architecture that isolates the wired Ethernet network from the wireless network, which strictly limits the possibility of the Vive Wi-Fi being used to access the corporate network and gain confidential information
2. A distributed security architecture with each hub having its own unique keys that would limit any potential breach to only a small area of the system
3. Multiple levels of password protection (Wi-Fi network and the hubs themselves), with built-in rules that force the user to enter a strong password
4. NIST-recommended best practices including salting and SCrypt for securely storing usernames and passwords
5. AES 128-bit encryption for network communications
6. HTTPS (TLS 1.2) protocol for securing connections to the hub over the wired network
7. WPA2 technology for securing connections to the hub over the Wi-Fi network
8. Azure provided encryption-at-rest technologies

The Vive hub can be deployed in one of two ways:

- Dedicated Lutron Network
- Connected to the corporate IT network via Ethernet. The Vive hub must be connected via Ethernet to access certain features such as BACnet® for BMS integration or OpenADR® integration. Lutron advises following best practices in this instance, including separating the business information network and the building infrastructure network. Use of a VLAN or physically separated networks is recommended for secure deployment.

Dedicated Lutron Network Deployment

The Vive hub is not connected to the building network. Wi-Fi is used to connect to a smart device such as a phone, tablet, or PC for commissioning and configuration only. The Vive hub serves web pages for setup and maintenance via a password-protected connection. The Wi-Fi SSID can be set to not broadcast. The Vive hub Wi-Fi may be disabled if desired.

Corporate IT Network Deployment

The Vive hub may be deployed with a fixed Ethernet IP address or served over DHCP. Once the IT network is operational, the Vive hub will serve password protected web pages for access and maintenance. The Vive hub Wi-Fi may be disabled if desired. The Vive hub reserves the IP subnet 192.168.3.0/24 for its Wi-Fi, so the hub cannot be assigned an Ethernet IP address in that range.

The Vive hub acts as a Wi-Fi access point purely for the configuration and commissioning of the Vive system. It is not a substitute for your building's normal Wi-Fi access point. The Vive hub does not act as a bridge between wireless and wired networks.

It is strongly recommended that local IT security professionals be involved with the network configuration and set-up to ensure the installation meets their security needs.

Dedicated Network

Wi-Fi Only

Ports Used

- No IT configuration needed

Corporate Network

Single Hub

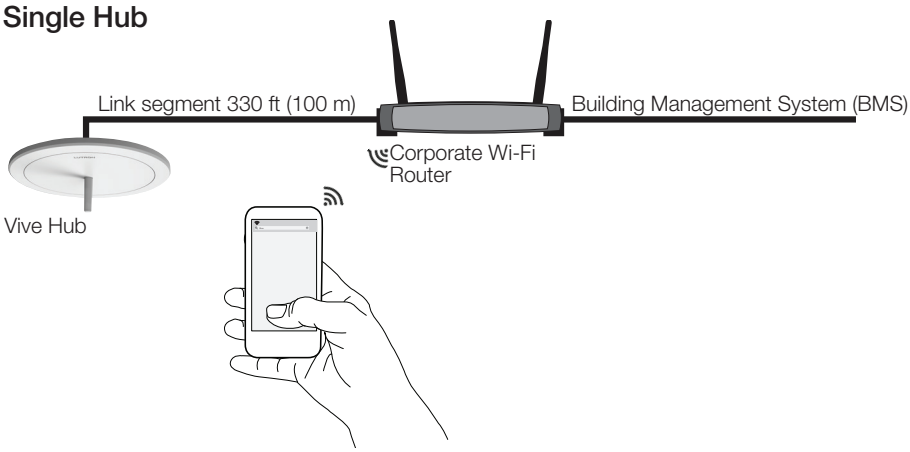

Ports Used

Traffic	Port	Type	Connection	Description
Outbound	47808 (configurable)	UDP	Ethernet	Used for BACnet® integration into Building Management Systems
	80	TCP		Used to discover the Vive hub when mDNS is not available
	5353	UDP	Ethernet	Used to discover the Vive hub via mDNS
	Configurable	TCP	Ethernet	Used for OpenADR®. Specified by utility company
Inbound	443	TCP	Both Ethernet and Wi-Fi	Used to serve user interface to smart device
	80	TCP		Used by other Vive hubs to proxy
	8081	TCP	Ethernet	Used for local LEAP connections to integrations and Vive Vue
	8083	TCP	Ethernet	Used for local LAP connections to integrations and Vive Vue
	8444	TCP	Ethernet	Used to communicate with the Vive Vue server
	47808 (configurable)	UDP	Ethernet	Used for BACnet® integration into Building Management Systems
	5353	UDP	Ethernet	Used to discover the Vive hub via mDNS

Corporate Network *(continued)*

Multiple Hubs

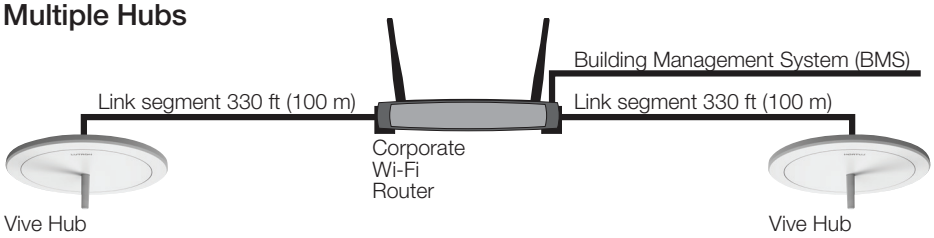

Ports Used

Traffic	Port	Type	Connection	Description
Outbound	47808 (configurable)	UDP	Ethernet	Used for BACnet® integration into Building Management Systems
	80	TCP		Used to discover the Vive hub when mDNS is not available
	5353	UDP	Ethernet	Used to discover the Vive hub via mDNS
	Configurable	TCP	Ethernet	Used for OpenADR®. Specified by utility company
Inbound	443	TCP	Both Ethernet and Wi-Fi	Used to serve user interface to smart device
	80	TCP		Used by other Vive hubs to proxy
	8081	TCP	Ethernet	Used for local LEAP connections to integrations and Vive Vue
	8083	TCP	Ethernet	Used for local LAP connections to integrations and Vive Vue
	8444	TCP	Ethernet	Used to communicate with the Vive Vue server
	47808 (configurable)	UDP	Ethernet	Used for BACnet® integration into Building Management Systems
	5353	UDP	Ethernet	Used to discover the Vive hub via mDNS

Inter-Hub Link Wiring

Notes

- The inter-hub wiring is considered IEC PELV/NEC® Class 2; do not run in the same conduit as line (mains) voltage wiring.
- Wiring distance for any single link segment is 330 ft (100 m) max; use Lutron-provided or third-party Ethernet switches for longer distances (see page 3).
- Up to 64 hubs can be networked together.
- Up to 100 hubs can be networked together when Vive Vue is used.
- Hubs communicate over the inter-hub link using multicast UDP or TCP; a dedicated network is recommended but not required.
- The Wi-Fi access port cannot be used to create an ad hoc network for use as the inter-hub communication link.

Compatible Devices

- **Maestro Wireless Dimmers and Switches**
  - MRF2S-6CL-XX[1]
  - MRF2S-6ELV120-XX[1]
  - MRF2S-8S-DV-XX[1]
  - UMRF2S-8S-DV-XX[1]
  - MRF2S-8ANS120-XX[1]
  - UMRF2S-8ANS120XX[1]
  - MRF2S-6ANS-XX[1]
  - MRF2S-6ND-120-XX[1]
- **Maestro Wireless Companion Dimmers and Switches**
  - MA-R-XX[1]
  - MSC-AD-XX[1]
  - MA-AS-XX[1]
  - MSC-AS-XX[1]
- **Maestro Wireless 0-10V Dimmers and Switches with Sensor[2]**
  - MRF2S-8SD010-XX
  - MRF2S-8SS-XX
  - MRF2S-8SDV010-XX
  - MRF2S-8SSV-XX
- **PowPak Modules**
  - FCJS-010
  - FCJS-010-EM
  - FCJS-ECO
  - FCJS-ECO-EM
  - RMJS-ECO32-SZ
  - RMJS-8T-DV-B
  - RMJS-8T-DV-B-EM
  - URMJS-8T-DV-B
  - RMJS-16RCCO1DV-B
  - URMJS-16RCCO1DVB
  - RMJS-16R-DV-B
  - RMJS-16R-DV-B-EM
  - URMJS-16R-DV-B
  - RMJS-5RCCO1-DV-B
  - RMJS-5R-DV-B
  - RMJS-20R-DV-B
  - RMJS-20RCCO1DV-B
  - RMJS-CCO1-24-B
  - URMJS-CCO1-24B
- **In-Line Phase Control Dimmers[3,4]**
  - RMQS-250-NE
  - RMQS-250-NE-EM4
- **Dimming Modules**
  - RMJS-5T-347
  - RMJS-5T-347-EM
  - RMJS-PNE-DV[5]
  - RMJS-PNE-DV-EM[5]

1 "XX" denotes color code and "YYY" denotes button marking code.
2 Requires Vive hub software 01.09 or higher.
3 Requires Vive hub software 01.12 or higher.
4 Israel and Hong Kong only.
5 Requires Vive hub software 01.13 or higher.

Compatible Devices *(continued)*

- **Pico Wireless Controls**[1]
  - PJ2-2B-GXX-YYY
  - PJ2-2BRL-GXX-YYY
  - PJ2-3B-GXX-YYY
  - PJ2-3BRL-GXX-YYY
  - PJ2-4B-GXX-EL1[2]
  - PJ2-4B-GXX-EL2[2]
  - PJ2-4B-GXX-L01[2]
  - PJ2-4B-GXX-L21[2]
  - PJ2-4B-GXX-L31[2]
  - PJ2-4B-GXX-PY4[2]
  - PJN-2B-GXX-L01
  - PJN-3BRL-GXX-L01
  - PQ2-2B-TXX-L01[3]
  - PQ2-2BRL-TXX-L01[3]
  - PQ2-3B-TXX-L01[3]
  - PQ2-3BRL-TXX-L01[3]
  - PQ2-4B-TXX-L21P[2,3]
  - PQ2-4B-TXX-L01[2,3]
  - PQ2-4B-TXX-L31[2,3]
  - PQ2-4B-GXX-EL1[2,3]
  - PQ2-4B-GXX-EL2[2,3]
  - PQ2-4B-GXX-PY4[2,3]
  - PJL-2B-GXX-YYY
  - PJL-2BRL-GXX-YYY
  - PJL-3BRL-GXX-YYY
- **Wireless Occupancy and Daylight Sensors**
  - LRF2-OCR2B-P-WH
  - LRF2-VCR2B-P-WH
  - LRF2-OHLB-P-WH
  - LRF2-OKLB-P-WH
  - LRF2-OWLB-P-WH
  - LRF2-VHLB-P-WH
  - LRF2-VKLB-P-WH
  - LRF2-VWLB-P-WH
  - LRF2-DCRB-WH
  - LRF7-OCR2B-P-WH[3]
  - LRF7-OHLB-P-WH[3]
  - LRF7-OKLB-P-WH[3]
  - LRF7-OWLB-P-WH[3]
  - LRF7-DCRB-WH[3]
- **Energy Retrofit Kits**
  - MRF2S-1S8A-1OC
  - MRF2S-1S8A-1OH
  - MRF2S-1S8A-1OK
  - MRF2S-1S8A-1OW
  - MRF2S-1S8A-1VC
  - MRF2S-2S8A-1OW
- **Wireless Receptacle Controls**
  - CAR2S-15-STR-XX[1]
  - CAR2S-20-STR-XX[1]
  - CAR2S-15-DTR-XX[1]
  - CAR2S-20-DTR-XX[1]
- **Wireless Fixture Controls**
  - DFCSJ-OEM-RF
  - DFCSJ-OEM-OCC
  - DFC-OEM-DBI

1 "XX" denotes color code and "YYY" denotes button marking code.
2 Button programming is only for all devices paired to the Pico remote control. These Pico remote controls are unable to have their buttons be individually assigned to different rooms.
3 Israel and Hong Kong only.

The Lutron logo, Lutron, Clear Connect, Maestro, Maestro Wireless, Pico, PowPak, Radio Powr Savr, Vive Vue, and Vive are trademarks or registered trademarks of Lutron Electronics Co., Inc. in the US and/or other countries.
Bonjour, Mac, Safari and iPhone are trademarks of Apple Inc., registered in the U.S. and other countries.
App Store is a service mark of Apple Inc., registered in the U.S. and other countries.
All other product names, logos, and brands are property of their respective owners.

Gym Lighting Controls Elevation Mounting Detail

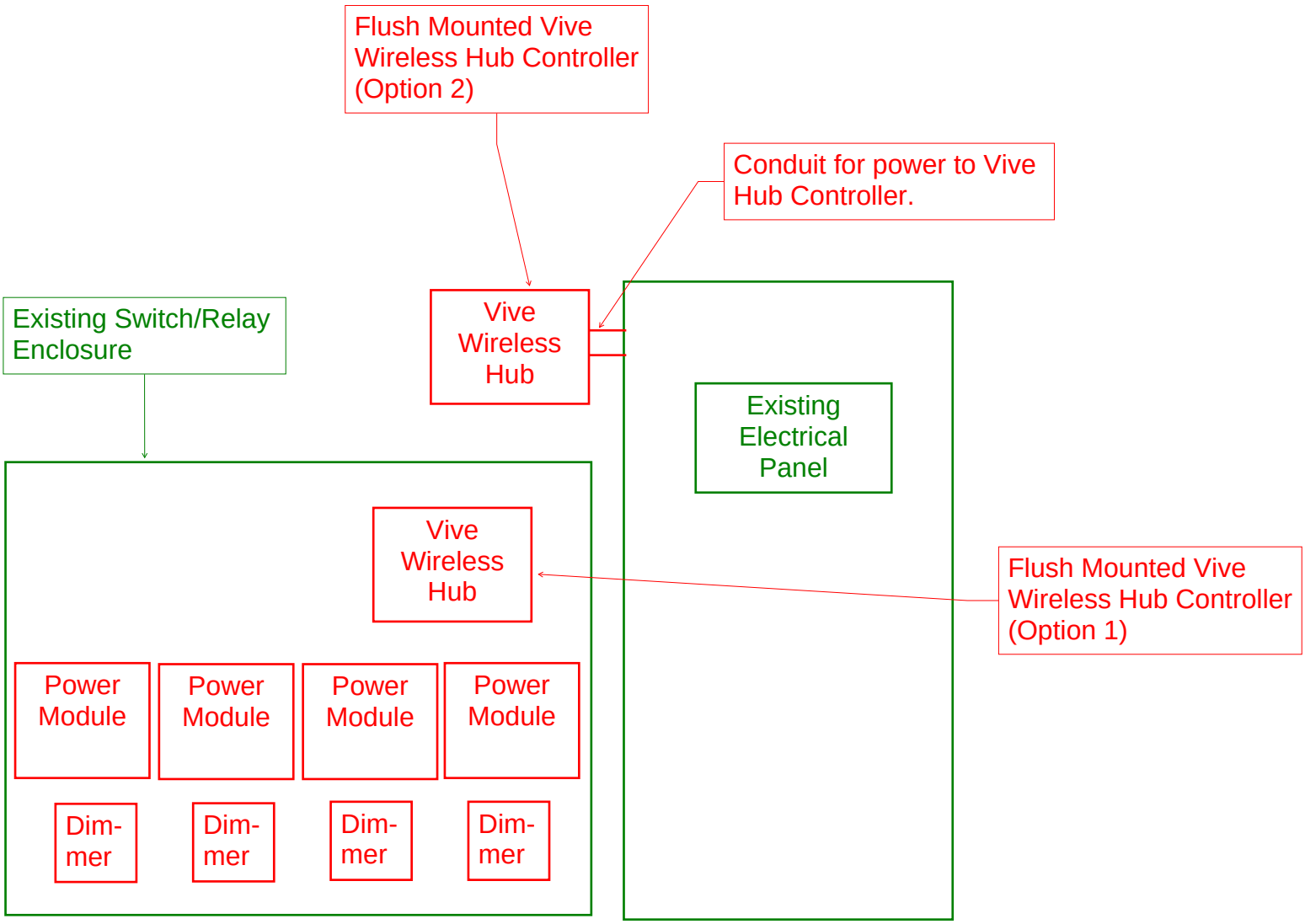

Community Center Modernization Project

City of Soledad Public Works Dept.

Overview

- Background
- Base Bid Project
- Kitchen Remodel
- Change Order
- Alt Work
- Remaining Items
- CDBG

Background

- The Community Center was constructed in 1993, and although various repairs and replacements have taken place over the years, the facility direly needed a comprehensive repairs and upgrades project to bring the facility to current City and County Health Codes.

- Council Approved a Construction Services Contract with David Construction & Management for the total not to exceed amount of $787,169.40 on April 9, 2024.

Base Bid Project

- Kitchen Remodel
- Stage Lift
- Stage Lighting & Electrical

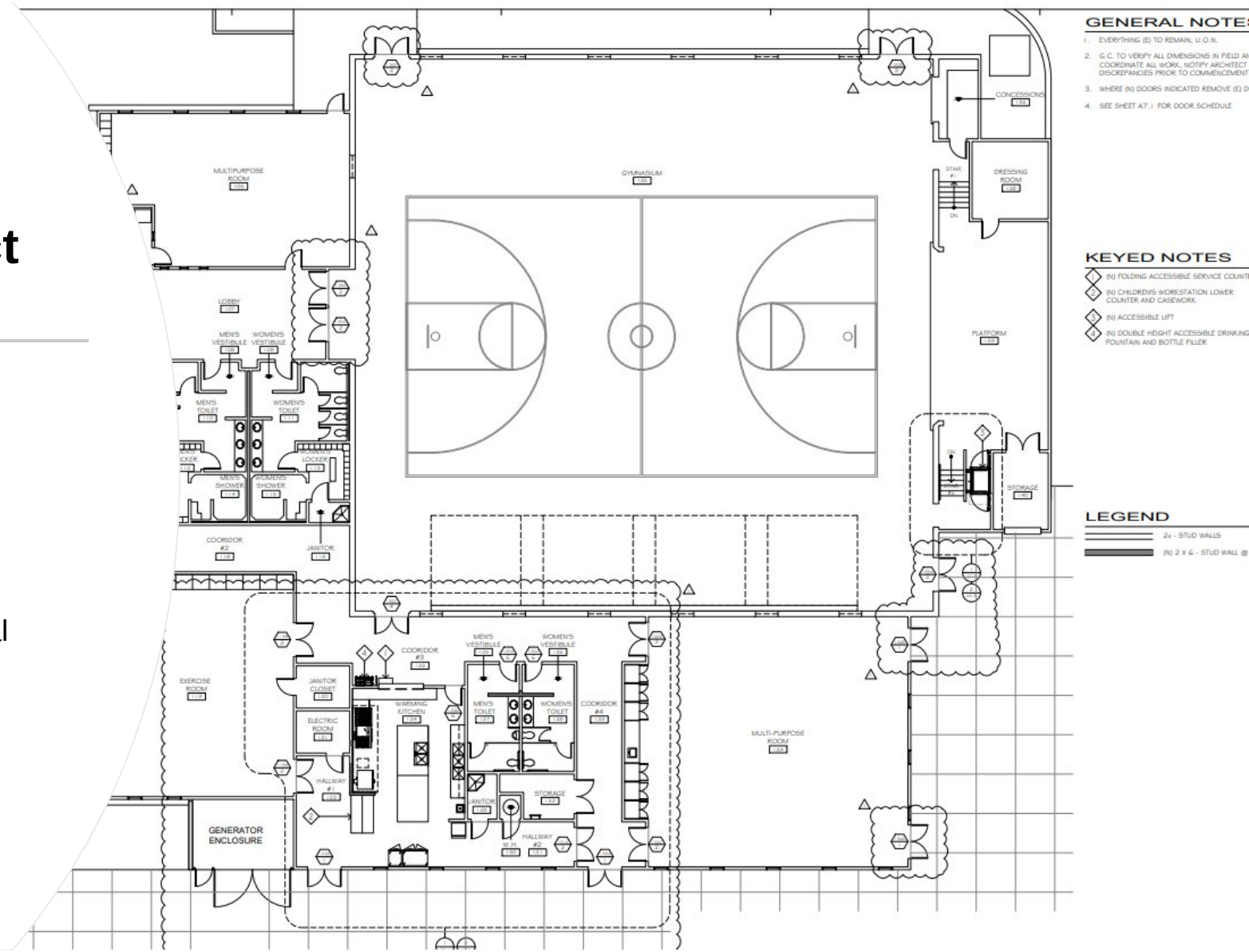

Kitchen Remodel

- Kitchen and Base Project is nearly completed with a tentative schedule of completion the first full week of November.
- Epoxy Floors finished the curing process, and the final installation of kitchen equipment is to be completed before the paint finishing is performed.

Change Orders

- Approved Change Orders to Date:
  - CCO #1 – $36,073.00: Included substitutions for the exhaust hood, GFCI, and additional electrical work in the Kitchen, Mold Remediation, and the front door refurbishments.
  - CCO #2 - $14,228.00: This included the mold remediation(demo and replacement) along the perimeter in the kitchen also this included a deduction from the site work scope.
  - CCO #3 - $252,785.00: Included performing corrective demolition and reinstallation of the flatwork/walkway between ADA Parking Stalls, Stage Wall and Ceiling finishes, grease interceptor conflict, kitchen waterline repair, wood rot repairs on the south wall, and approval of Alt 1 for Gym lighting and Winches.
  - CCO #4 - $8,967.00: Included PowPak Modules for Power Conversion with Pico Switches and the Vent Code Discrepancy and the work to make it compliant.

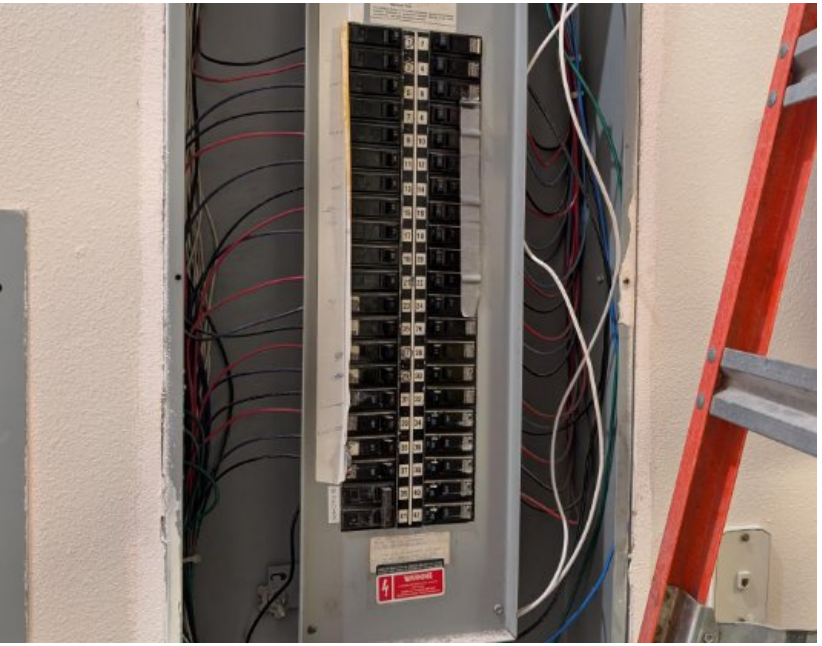

Alt Work

- The Community Center Modernization Project Bid Alternates:
  - Alt 1: For the Gym Lighting - $128,678.48
  - Alt 2: Restroom Remodel - $183,240.01
  - Alt 3: Sitework/Trash Enclosure/ Parking Lot Lighting - $142,674.4

  - City Council approved through Change Order No. 3 Bid Alt #1 with the addition of the winches for a total of $140,300 on September 4th, 2024.

Remaining Items

- Future Change Order# 5 - $79,544.40 to address some of the following items:
  - Stage/Gym Lighting Issues, the existing infrastructure does not support the PowPak Modules that would satisfy the dimmable requirements under Title 24 Lighting Requirements of the California Building Standards Code. Therefore, there is anticipated additional costs for the additional efforts and electrical work associated with this item.

  - Emergency Light Hotwire Issues: Currently, the emergency lighting is tied to a light switch fixture in the Gym, which direly needs to be diverted to a permanent power source in the event of an emergency.