CHARLES TOWN UTILITY BOARD
AGENDA

WEDNESDAY, MAY 25, 2022

Regular Meeting | **661 South George Street, Charles Town, WV 25414** | **4:00 PM**

CALL TO ORDER

1. **APPROVAL OF MINUTES**
   a. Approval of April 27, 2022 Regular Meeting Minutes
   UB Minutes 4.27.22.pdf

2. **PUBLIC COMMENT**
   This portion of the agenda is designed for members of the general public to share thoughts on items of interest in the community. By law, Board members may ask clarifying questions or discuss procedural matters but are not permitted to discuss the policy merits of any issue unless it is scheduled for discussion.

   The public is invited to attend this meeting in person or via webcast (www.ctubwv.com- Board Meetings - Meeting Agendas and Minutes 2022) or by accessing the following zoom link:

   https://us06web.zoom.us/j/85087928984?pwd=dHlyRmVYejFlTmdIQUhZdU9admlJdz09

   Meeting ID: 850 8792 8984
   Passcode: 785440
   +1 301 715 8592 US

3. **UNFINISHED BUSINESS**
   a. Distressed Utility Updates - Possible Executive Session Under: WV State Code Section §6-9A-4(b)(9) - To consider matters involving or affecting the purchase, sale or lease of property, advance construction planning, the investment of public funds or other matters involving commercial competition, which if made public, might adversely affect the financial or other interest of the state or any political subdivision and involving contract matters.
   i. WV PSC Case No. 21-0260-S-DU Shenandoah Junction Public Sewer
   ii. WV PSC Case No. 21-0818-S-DU Cave Road Utilities, LLC

4. **NEW BUSINESS**
   a. T-Mobile 1st Lease Amendment - Sawgrass Drive
   T-Mobile 1st Amd -Sawgrass Dr.pdf

b. GDF - Draft Water Facility Plan Update (Water Treatment Plant)
Water System Facility Plan Update-Apr2022.pdf
c. PNGI Draft Permit
PNGI Draft Permit.pdf
d. Addison and Haines Civil Action Update - Possible Executive Session of the Board pursuant to the following statutory exception to the Open Governmental Proceeds Act): WV State Code Section §6-9A-4(b)(12) – To discuss any matter which, by express provision of federal law, or state statute or rule of court is rendered confidential, or which is not considered a public record within the meaning of the Freedom of Information Act, specifically in this case, matters protected by Attorney-Client Privilege.
e. RK&K Task Order No. 21- Addison
RKK Task Order - Addison.pdf
f. Draft CTUB Service Area Map and Discussion
CTUB Water Service Delineation.pdf
g. Discussion on Personnel Matter- Possible Executive Session Under: WV State Code Section §6-9A-4(b)(2)(A) – Matters arising from the appointment, employment of an employee.

5. **MANAGER REPORTS**
   a. Utility Manager Report
   UM Report 5.25.22.pdf
   Revenue & Expense April.pdf
   b. Chairman Report

6. **APPROVAL OF BILLS**
   a. May 11, 2022
   Board Report 5.11.22.pdf
   b. May 25, 2022
   Board Report 5.25.22.pdf

7. **ADJOURNMENT**

8. **INFORMATION ONLY**
   a. Next Meeting - June 8, 2022 at 4:00 PM

April 27, 2022

The Charles Town Utility Board held a regular meeting on April 27, 2022 at 4:00 P.M. Members of the Board present were Bob Trainor, Duke Pierson, Tommy Stocks, Jacquelyn Milliron and Jeff Whitten. Also present were Kristen Stolipher, April Shultz, Hoy Shingleton and Ashley Stottlemyer. The Chairman called for changes or corrections to the April 13, 2022 regular meeting minutes. Jacquelyn suggested changes and with no objections, the Board unanimously approved the minutes as amended. The Board received no public comments.

The Chairman next opened the floor for discussion on the Project Reimbursement. As a follow up to the discussion at the last meeting, Kristen provided the reimbursement would be specifically for the reimbursement through the bond issue for the renewal and replacement project costs. As the discussion came up at City Council as well, Kristen explained this is a global issue the Board should weigh in on. The reimbursement would cover the completed tasks that have been paid to date for the renewal and replacement project and the collection project. John Kunkle presented an analysis and the justifications for receiving the reimbursed costs through the Bond issue. John Stump also answered questions from the Board. The Board provided discussions. Staff will draft a policy regarding reimbursement and bring it back to the Board at the next meeting.

Next, the Board discussed Resolution No. 2022-03 – Approval of Fiscal Year 2023 Water and Sewer Budgets. Kristen and April provided feedback to the Board on the changes for the fiscal year. The Board held discussions. Staff will look into the next step of rate equalization in the fall. Motion by Tommy, second by Duke, the Board unanimously approved Resolution No. 2022-03, fiscal year 2023 water and sewer budgets.

The Board next discussed the Renewal and Replacement Schedule and Funding Submission. Kristen provided a draft schedule for the renewal and replacement project, including the bond and bidding schedules. Also included are the submissions for earmarked funding from Senator Capito's Congressionally Directed Spending. With the help from Region 9, Kristen submitted requests for the 2022 sewer collection system project.

Next discussed by the Board was the CTUB customer billing for sewer customers currently billed by JUI. As a follow-up to the discussion held at the last meeting, Kristen mentioned the current contract is $3.50 per bill. The proposed contract is at $5.50 per bill with a 3% annual increase. Staff prepared a cost comparison for CTUB to either move forward with the proposed JUI contract or purchase the monthly meter readings and handle the billing in-house. The Board held discussions. Staff proposed to move forward with the cheaper option, to receive the meter readings from JUI and handle the billing in-house. This change in agreement will need to be submitted and approved by the PSC. Motion by Duke, second by Tommy, the Board unanimously approved staff to evaluate costs associated with the proposed JUI contract and if a lower rate cannot be negotiated then move forward with the option to handle the billing of those customers in-house.

The Utility Manager Report was next addressed. Kristen briefed the Board on this month's sewer and water efforts including a PVC liner demo on May 19th near Brook Street and continued litigation for a sewerage backup lawsuit. Jacquelyn followed up with questions regarding the Wendy's pump station and new pump capacity. The Board held discussions.

The Chairman informed the Board of the possibility of not being the Chairman for the next meeting as there may be a new City Manager to fulfill those duties. Jacquelyn mentioned a correspondence from the Safe Drinking Water Collaborative regarding a Drinking Water Week Proclamation. The Board next discussed the Approval of Bills. Motion by Tommy, second by Duke, the Board unanimously approved the payment of bills.

Next, motion by Duke, second by Jacquelyn, the Board unanimously approved convening into Executive Session to discuss Distressed Utility Updates for Shenandoah Junction Public Sewer (Case No. 21-0260-S-DU) and Cave Road Utilities, LLC (Case No. 21-0818-S-DU) - Possible Executive Session Under: WV State Code Section §6-9A-4(b)(9) - To consider matters involving or affecting the purchase, sale or lease of property, advance construction planning, the investment of public funds or other matters involving commercial competition, which if made public, might adversely affect the financial or other interest of the state or any political subdivision and involving contract matters and Tolbert Complaint Case WV PSC Case No. 22-0265-LRR-WS-C – Possible Executive Session of the Board pursuant to the following statutory exception to the Open Governmental Proceeds Act): WV State Code Section §6-9A-4(b)(12) – To discuss any matter which, by express provision of federal law, or state statute or rule of court is rendered confidential, or which is not considered a public record within the meaning of the Freedom of Information Act, specifically in this case, matters protected by Attorney-Client Privilege. The Board declared executive session over at 6:20 P.M. No action taken by the Board.

Jacquelyn suggested the Board may want to consider discussing the NPDES permit for the Race Track that was recently advertised in the newspaper at a future meeting. With no objections, the Board adjourned the meeting at 6:22 P.M. The May 25th regular meeting will be held beginning at 4:00 P.M.

_____ _____

Chairman Secretary

DocuSign Envelope ID: F0497F39-62C8-414D-A01E-4D140D1DBFEE

FIRST AMENDMENT TO LICENSE AGREEMENT

Site Name/Location: **The City of Charles Town – WV-003 Sawgrass Drive**
325 Sawgrass Drive, Charles Town, Jefferson County, West Virginia 25414

This First Amendment to License Agreement (the "**First Amendment**"), dated as of _____, 2022, is made and entered into by and between T-MOBILE NORTHEAST LLC, a Delaware limited liability company, with its principal offices at 12920 SE 38th Street, Bellevue, WA 98006 ("**LICENSEE**") and THE CITY OF CHARLES TOWN, a Municipal Corporation, with an address at 101 East Washington Street, Charles Town, West Virginia 25414 ("**LICENSOR**"). Licensee and Licensor are at times collectively referred to herein as the "**Parties**" and individually as a "**Party**".

RECITALS

WHEREAS Licensee and Licensor are parties to that License Agreement dated as of August 22, 2018 (the "Agreement") pursuant to which Licensee is leasing from Licensor space on Licensor's water tank (the "**Site**") and within Licensor's Property located at 325 Sawgrass Drive, Charles Town, West Virginia 25414 for the purposes of operating certain communications antennas and related equipment thereat (collectively the "**Property**"); and

WHEREAS, Licensee desires to change the configuration of its antennas and related equipment at the Site and within the Property in accordance with the terms hereof; and

NOW, THEREFORE, in consideration of the foregoing recitals and the agreements and covenants set forth herein, and for other good and valuable consideration, the receipt and adequacy of which are hereby acknowledged, the Parties hereto agree as follows:

1. In consideration of Licensor's consent to the equipment modifications referenced in Exhibit B-1 of this First Amendment, the monthly rent will increase effective June 1, 2022, by Four Hundred Dollars and Zero Cents ($400.00) per month, for a total of Two Thousand Eight Hundred Four Dollars and Zero Cents ($2,804.00) per month. On September 1, 2022, or any other extension terms exercised by Licensee, the monthly rent shall be increased subject to the Extension Term monthly rental increase set forth in Section 2(a) of the Agreement.

2. **Exhibit B** to the Agreement is hereby deleted in its entirety, and the new **Exhibit B-1** to the Agreement, the Colocation Application of Licensee, is hereby incorporated into the Agreement in lieu thereof.

3. **Exhibit C** to the Agreement is hereby deleted in its entirety, and the new **Exhibit C-1** to the Agreement, the Licensee As-Built Construction Drawings, is hereby incorporated into the Agreement in lieu thereof.

4. Except as expressly amended herein, the Agreement terms and provisions thereof shall remain in full force and effect. Capitalized terms not otherwise defined herein shall have the meanings ascribed to such terms in the Agreement.

5. This First Amendment may be executed in multiple counterparts, each of which, when executed, shall be deemed an original instrument, but all of which taken together shall constitute one and the same agreement.

SIGNATURES APPEAR ON THE NEXT PAGE

IN WITNESS WHEREOF, the parties have executed this First Amendment as of the day and year first above written.

Witness

DocuSigned by:
Shaya Samuel
782B09787BEE4A9...

Print Name: Shaya Samuel

T-Mobile Legal Approval By:
Lois Duran

LICENSEE:

T-MOBILE NORTHEAST LLC
a Delaware limited liability company

By: DocuSigned by: JAMES SIMON

Name: JAMES SIMON

Title: 5/10/2022

NATIONAL LEASE GOVERNANCE Approved T-MOBILE 2022

TMO Signatory Level : L06

Witness

Print Name:

LICENSOR:

THE CITY OF CHARLES TOWN
a Municipal Corporation

By:

Name:

Title:

DocuSign Envelope ID: F0497F39-62C8-414D-A01E-4D140D1DBFEE

EXHIBIT B-1

CO-LOCATION APPLICATION OF LICENSEE

[See Attached Co-location Application of Licensee]

☐ NEW LEASE	☑ AMENDMENT TO EXISTING LEASE	☐ ANCHOR TENANT	☐ RECONTRACT

INTERNAL USE ONLY	
APP VERSION #	1
LEASE #	17
AMENDMENT #	1

PLEASE RETURN THIS APPLICATION VIA EMAIL TO:			
Wireless Networks Group, Inc. 1011 Holden Road Frederick, Maryland 21701-3437 Attn: Michael Hofe	E-Mail: mhofe@wirelessnetworksgroup.com Phone: 301-667-0001	Charles Town Site Number: Charles Town Site Name: Application Date: Revision Dates: OPS Approval:	**WV-003** **Sawgrass Drive** 04/07/2022 5/3/2022 5/19/2022

APPLICANT / CARRIER INFORMATION

Carrier Name:	**T-Mobile**	**Contact Name:**	**Diane Quigley**
Carrier Site Number:	**7HCH307A**	**Contact Number:**	**410-693-0250**
Carrier Site Name:	**Charles Town Locust Hill WT**	**Contact Fax:**	
Carrier Legal Entity Name:	T-Mobile Northeast LLC	**Contact Address:**	NB+C 6095 Marshalee Drive Elkridge, MD 21075
State of registration:			
Type of entity (LP, LLC, Corp) d/b/a (If applicable)	LLC		
Notice Address for Lease:	T-Mobile USA 12920 S.E. 38th Street Bellevue, WA 98006 Attention: Lease Compliance Site #: 7HCH307A	**Contact E-mail:**	dquigley@nbcllc.com
With copies to:		**Additional E-mail:**	
Carrier Invoice Address:	12920 S.E. 38th Street Bellevue, WA 98006	**Desired Install Date:**	7/15/2022
Carrier Invoice Contact - Name, Title, Phone No.	T-Mobile Property Management 877-373-0093	**Carrier NOC#**	877-611-5868

ADDITIONAL CONTACT INFORMATION

Leasing Contact Name/Number:	Diane Quigley 410-693-0250
RF Contact Name/Number:	Ryan Conway 443-570-1753
Construction Contact Name/Number:	Bill Gorgone 215-620-0548
Emergency Contact Name/Number:	1-877-611-5868

SITE INFORMATION

Latitude:	**39.281861**	**N**	**Existing Structure Type:**	**Water Tank**
Longitude:	**-77.911972**	**W**	**Existing Structure Height:**	**139.3**
Site Address:	**325 Sawgrass Drive, Charles Town, WV 25414**			

FREQUENCY/TECHNOLOGY INFORMATION

Type of Technology for all equipment (i.e., 3G, LTE, CMDA, MW, WiFi, TV, etc.)	
TX Frequency (MHz)	1930-1945, 1945-1950, 1965-1970, 1970-1975, 2140-2145, 2145-2150, 2150-2155, 673-678, 678-683, 683-688, 728-734,
RX Frequency (MHz)	1850-1865, 1865-1870, 1885-1890, 1890-1895, 1740-1745, 1745-1750, 1750-1755, 627-632, 632-637, 637-642, 698-704, 2496-2690,
Tenants using an unlicensed band must provide exact Frequency Channels and Call Sign(s) to be utilized. (Providing the band range only will not be accepted.)	

PLEASE PROVIDE A BRIEF DESCRIPTION OF GENERAL SCOPE OF WORK

T-Mobile to Remove (4) existing antennas and existing (4) Radios. Installing (8) new Antennas, (4) new Radios and (4) new 6x24 hybrid lines. Adding (1) B160 and (1) 6160 cabinets on existing pad.

Final Configuration: (12) Antennas, (8) RRUs, (4) 6x12 hybrids, (4) 6x24 hybrids, (3) cabinets and (1) generator.

Reserved: (1) MW, (1) ODU, (1) coax

EXISTING EQUIPMENT Applicant's Existing Equipment Configuration and Specifications										
Equipment Type (ex: panel, TMA, RRU)	**RAD (feet)**	**Mount Height (feet)**	**Mount Type**	**Equip Qty**	**Equipment Manufacturer**	**Equipment Model #**	**Equip Dim (HxWxD) (ft or in)**	**Equip Weight (lbs)**	**Az**	**Remain**
Panel	118	118	Pipe Mount	4	Ericsson	Air32 KRD901146-1 B66A_B2A	56.6"x12.9"x8.7"	132.2	0/80/190/280	No
Panel	118	118	Pipe Mount	4	RFS	APXVAARR24-43-U-NA20	95.9" x 24" x 8.7"	128	0/80/190/280	Yes
MW	118	118	Pipe Mount	1	RFS	SC2-W100AC	26.4"x11.5"	22	180	Reserve
ODU	118	118	Pipe Mount	1	Aviat	600	10.4"x10.4"x4.9"	11		Reserve
RRU	118	118	Pipe Mount	4	Ericsson	Radio 4449 B71+B12	15" x 13.2" x 10.4"	75		Yes
RRU	118	118	Pipe Mount	4	Ericsson	Radio 2217 B2	15"x13.2"x4.4"	30.5		No

EXISTING LINES Applicant's Existing Lines and Specifications					
Line Type	**Line Size (Inches)**	**Total # of Lines**	**Coax interior or exterior (for monopoles)**	**Remain**	**Comments:**
hybrid	1 5/8"	4	exterior	Yes	6x12
coax	1/2"	1	exterior	Reserve	MW

PROPOSED EQUIPMENT Applicant's Proposed Equipment Configuration and Specifications									
Equipment Type (ex: panel, TMA, RRU, ice shields)	**RAD (feet)**	**Mount Height (feet)**	**Mount Type**	**Equip Qty**	**Equipment Manufacturer**	**Equipment Model #**	**Equip Dim (HxWxD) (ft or in)**	**Equip Weight (lbs)**	**Azimuth**
Panel - Replacement	118	118	Pipe Mount	4	Ericsson	Air6449	33.1"x20.5"x8.5"	113	0/80/190/280
Panel - New	118	118	Pipe Mount	4	Ericsson	VV-65A-R1	54.7"x12"x4.65"	24.7	0/80/190/280
RRU - Replacement	118	118	Pipe Mount	4	Ericsson	Radio 4460 B25+B66	17.0"x15.1"x11.9"	109	
Panel - Existing	118	118	Pipe Mount	4	Ericsson	APXVAARR24-43-U-NA20	95.9" x 24" x 8.7"	128	0/80/190/280
RRU - Existing	118	118	Pipe Mount	4	Ericsson	Radio 4449 B71+B12	15" x 13.2" x 10.4"	75	
MW - Previous Reserve	118	118	Pipe Mount	1	RFS	SC2-W100AC	26.4"x11.5"	22	180
ODU - Previous Reserve	118	118	Pipe Mount	1	Aviat	600	10.4"x10.4"x4.9"	11	
Pipe Mounts	118	118	Pipe Mount	4	Galv. Pipe		2.375" Dia. Sch 40. Galv. Pipe		

PROPOSED LINES Applicant's Proposed Lines and Specifications				
Line Type	**Line Size (Inches)**	**Total # of Lines**	**Coax interior or exterior (for monopoles)**	**Comments:**
Coax	1/2"	1	Exterior	Previous Reserve for Future Microwave
RET Home Run Cable				
Fiber	1.99" 1-5/8"	4 4	Exterior Exterior	6 x 24 Hybrid Fiber - New 6 x 12 Hybrid Fiber - Existing
DC Power				

PROPOSED FINAL CONFIGURATION TOTALS	
EQUIPMENT TYPE	TOTAL
Panel Antennas	12
Omni/Whip Antennas	
RRU	8
TMA	
Diplexer / Triplexer	
Bias T	
Surge Suppressor	
MW Dish	1
Ice Shield	
ODU	1
Filter	
Combiner	
Junction Box	
RET	
Equipment Cabinets	3
Other (Please specify)	
Other (Please specify)	
Other (Please specify)	
Other (Please specify)	
Other (Please specify)	

PROPOSED FINAL CONFIGURATION TOTALS	
LINE TYPE	TOTAL
Coax	1
Hybrid	8
CAT5	
DC/Power	
RET	
Fiber	

ADDITIONAL EQUIPMENT INFORMATION

- RRUs, TMAs and ODUs are required to be installed directly behind the antennas / MW dish. Otherwise there will be an additional charge.
- All equipment lines are required to be installed inside the tower when space is available. Carriers will be charged an additional $25.00 per line per month if equipment lines are installed on the outside of the tower even though there is available space inside the tower. Charles Town must approve any installation of lines on the outside of the tower.
- All tenant equipment must be installed within one continuous 10 ft vertical envelope. Exceeding this vertical space will be subject to additional rent.

GROUND / INTERIOR SPACE REQUIREMENTS							
Total Ground / Interior Area Dimensions: **L' x W' = Total Square Feet Required**	18	X	19	(Including all Equipment (i.e., Shelter, Equipment Platform or Pad, Generator Pad, Generator Fuel Tank Pad, Antenna Sleds, etc. – provide details below)			
Cabinet Area Dimensions (Pad/Platform)	10	X	17	Cabinet Installation Type	Ground Pad		
Shelter Pad Dimensions		X		Shelter Manufacturer			
Rooftop Antenna Total Area Required		X		Antenna Sled Dimensions (per sector)	X	Antenna Wall Mount Dimensions (per sector)	X

EQUIPMENT CABINET REQUIREMENTS (Required for rooftops or Charles Town interior space)					
Number of Cabinets Required	1	Cabinet Dimensions (L' x W' x H')	63"x34"x26"	Manufacturer:	Ericsson B160
Number of Cabinets Required	1	Cabinet Dimensions (L' x W' x H')	63"x34"x26"	Manufacturer:	Ericsson 6160
Number of Cabinets Required	1	Cabinet Dimensions (L' x W' x H')	63"x62"x26"	Manufacturer:	Ericsson 6102
Equipment Cabinet Comments	Installed on existing pad				

GENERATOR REQUIREMENTS					
Generator Required?:	Existing	Generator Fuel Type	Propane	Generator Size	
Generator Pad Dimensions	Existing			Generator Manufacturer	
Generator Fuel Tank Pad Dimensions				Fuel Tank Manufacturer	

AC POWER REQUIREMENTS			
Meter Type	Existing Tenant Meter	Estimated Monthly Utility Usage Amount	
Voltage		Total Amperage	

FIBER / BACKHAUL					
Fiber Installation Status	Existing (No Change)	Fiber Provider			
Cable Type		Number of Points of Entry		Conduit/Riser Size (in inches)	

STRUCTURAL ANALYSIS DETAILS			
Structural Hardcopies Required?	Yes	If wet seals required, please provide address:	

ADDITIONAL COMMENTS

DocuSign Envelope ID: F0497F39-62C8-414D-A01E-4D140D1DBFEE

EXHIBIT C-1

LICENSEE AS-BUILT CONSTRUCTION DRAWINGS

[See Attached Final Approved CD's to be Replaced by As-Built Construction Drawings]

NOTE TO GENERAL CONTRACTOR:
REFER TO THE PASSING STRUCTURAL ANALYSIS AND APPLICABLE MOUNT ANALYSIS OF THE EXISTING WATER TANK CONSIDERING THE EXISTING AND PROPOSED LOADS PERFORMED (BY OTHERS). IF ANY DISCREPANCIES ARE FOUND, THE CONTRACTOR SHALL IMMEDIATELY NOTIFY THE ENGINEER IN WRITING.

DESIGN BASED ON RFDS VERSION: 4 DATED: 04/07/22

T-MOBILE NORTHEAST LLC

SITE NUMBER: 7HCH307A

SITE NAME: CHARLES TOWN LOCUST HILL WATERTANK

T-MOBILE ANCHOR INSTALLATION, DESIGN 4SEC-67D5A998E 6160

325 SAWGRASS DRIVE
CHARLES TOWN, WV 25414
JEFFERSON COUNTY

PENDING PASSING MA & PASSING SA

811 Know what's below. Call before you dig.

WEST VIRGINIA ONE CALL SYSTEM, INC. 1-800-245-4848 STOP! CALL BEFORE YOU DIG!

WEST VIRGINIA LAW REQUIRES THREE WORKING DAYS NOTICE PRIOR TO ANY EARTH MOVING ACTIVITIES

SCOPE OF WORK

PROJECT CONSISTS OF:

REMOVING:
(4) EXISTING ANTENNAS
(4) EXISTING RADIOS

INSTALLING:
(8) PROPOSED ANTENNAS
(4) PROPOSED RADIOS
(4) PROPOSED 6x24 HYBRID CABLES
(2) PROPOSED CABINETS
(4) PROPOSED MOUNTING PIPES
(4) PROPOSED MOUNTS

RELOCATING:
(1) EXISTING CABINET

SITE INFORMATION

LATITUDE (NAD 83):	39° 16' 54.78"
LONGITUDE (NAD 83):	-77° 54' 43.19"
JURISDICTION:	JEFFERSON COUNTY
ZONING:	R - RESIDENTIAL
TAX ACCOUNT NUMBER:	19-02-13A-04560000
PARCEL AREA:	0.85± ACRES
PARCEL OWNER:	CITY OF CHARLES TOWN
ADDRESS:	325 SAWGRASS DRIVE CHARLES TOWN WV 25414
GROUND ELEVATION:	582.7'± (AMSL)
STRUCTURE TYPE:	WATER TANK
STRUCTURE HEIGHT:	139.3' (AGL) (TOP OF WATER TANK) 145.1' (AGL) (TOP OF EXISTING ANTENNAS) 157.0' (AGL) (TOP OF LIGHTNING ROD)

PROJECT TEAM

APPLICANT:	T-MOBILE NORTHEAST LLC 12050 BALTIMORE AVENUE BELTSVILLE, MD 20705 OFFICE: (240) 264-8600 FAX: (240) 264-8610
PROJECT MANAGEMENT FIRM:	NETWORK BUILDING + CONSULTING, LLC. 6095 MARSHALEE DRIVE, SUITE 300 ELKRIDGE, MD 21075 (410) 712-7092
ENGINEERING FIRM:	NB+C ENGINEERING SERVICES, LLC. 6095 MARSHALEE DRIVE, SUITE 300 ELKRIDGE, MD 21075 (410) 712-7092
LANDLORD CONTACT:	MICHAEL HOFE 301-667-0001

VICINITY MAP

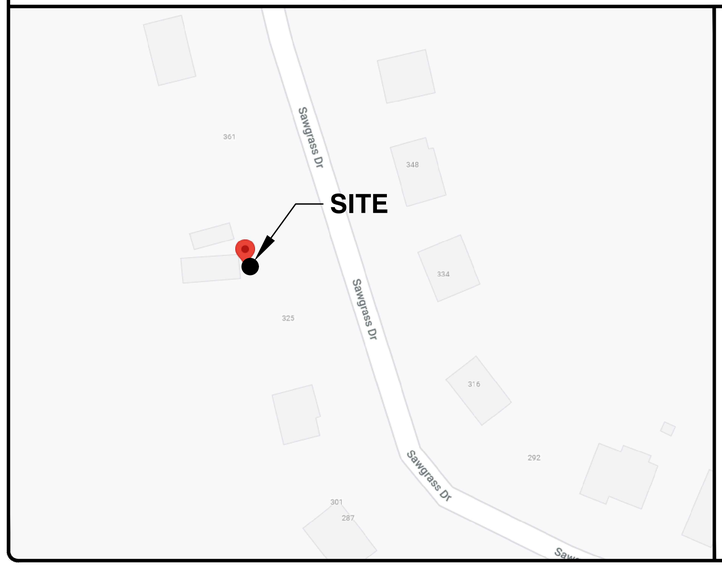

CODE COMPLIANCE

ALL WORK AND MATERIALS SHALL BE PERFORMED AND INSTALLED IN ACCORDANCE WITH THE CURRENT EDITIONS OF THE FOLLOWING CODES AS ADOPTED BY THE LOCAL GOVERNING AUTHORITIES. NOTHING IN THESE PLANS IS TO BE CONSTRUED TO PERMIT WORK NOT CONFORMING TO THE LATEST EDITIONS OF THE FOLLOWING CODES.

- 2015 INTERNATIONAL BUILDING CODE (IBC)
- 2014 NATIONAL ELECTRICAL CODE
- 2015 NFPA 101, LIFE SAFETY CODE
- 2015 STATEWIDE FIRE PREVENTION CODE
- AMERICAN CONCRETE INSTITUTE
- AMERICAN INSTITUTE OF STEEL CONSTRUCTION
- MANUAL OF STEEL CONSTRUCTION 13TH EDITION
- ANSI/TIA-222-H
- TIA 607
- INSTITUTE FOR ELECTRICAL & ELECTRONICS ENGINEER 81
- IEEE C2 NATIONAL ELECTRIC SAFETY CODE LATEST EDITION
- TELCORDIA GR-1275
- ANSI/T 311

DRAWING INDEX

T-1	TITLE SHEET
GN-1	GENERAL NOTES
SP-1	SITE PLAN
C-1	COMPOUND PLAN
C-2	EQUIPMENT PLANS
C-3	ELEVATION
A-1	ANTENNA SCHEDULE
A-2	ANTENNA PLANS
A-3	ANTENNA SPECIFICATIONS & DETAILS
A-4	EQUIPMENT SPECIFICATIONS & DETAILS
A-5	PLUMBING DIAGRAM & CABLING DETAIL
E-1	ELECTRICAL DETAILS
G-1	GROUNDING DETAILS
ST-1	ANTENNA MOUNTING DETAILS

DO NOT SCALE DRAWINGS

THESE DRAWINGS ARE FORMATTED TO BE FULL-SIZE AT 22"X34". CONTRACTOR SHALL VERIFY ALL PLANS AND EXISTING DIMENSIONS AND CONDITIONS ON THE JOB SITE AND SHALL IMMEDIATELY NOTIFY THE DESIGNER / ENGINEER IN WRITING OF ANY DISCREPANCIES BEFORE PROCEEDING WITH THE WORK OR MATERIAL ORDERS OR BE RESPONSIBLE FOR THE SAME. CONTRACTOR SHALL USE BEST MANAGEMENT PRACTICE TO PREVENT STORM WATER POLLUTION DURING CONSTRUCTION.

APPROVAL BLOCK

		APPROVED	APPROVED AS NOTED	DISAPPROVED/ REVISE
PROPERTY OWNER	5/20/2022 DATE	X		
SITE ACQUISITION	DATE			
CONSTRUCTION MANAGER	DATE			
ZONING	DATE			
RF ENGINEER	DATE			

APPLICANT

T-MOBILE NORTHEAST LLC
12050 BALTIMORE AVENUE
BELTSVILLE, MD 20705
OFFICE: (240) 264-8600
FAX: (240) 264-8610

ENGINEER

NB+C TOTALLY COMMITTED.
NB+C ENGINEERING SERVICES, LLC.
6095 MARSHALEE DRIVE, SUITE 300
ELKRIDGE, MD 21075
(410) 712-7092

SITE INFORMATION

7HCH307A
CHARLES TOWN LOCUST HILL WATERTANK
325 SAWGRASS DRIVE
CHARLES TOWN, WV 25414
JEFFERSON COUNTY

DESIGN RECORD

REVISIONS

REV	DATE	DESCRIPTION	BY
1	05/19/2022	REV PER COMMENT	BWB
0	05/10/2022	FINAL CDs	AMM

PROFESSIONAL STAMP

TRENT TRAVIS SNARR REGISTERED 21726 STATE OF WEST VIRGINIA PROFESSIONAL ENGINEER
05/19/22

ENGINEER

TRENT TRAVIS SNARR, P.E.
WEST VIRGINIA PROFESSIONAL ENGINEER
LICENSE #21726

SHEET TITLE

TITLE SHEET

SHEET NUMBER

T-1

ELECTRICAL & GROUNDING NOTES

1. ALL ELECTRICAL WORK SHALL CONFORM TO THE REQUIREMENTS OF THE NATIONAL ELECTRICAL CODE (NEC) AS WELL AS APPLICABLE STATE AND LOCAL CODES.
2. ALL ELECTRICAL ITEMS SHALL BE U.L. APPROVED OR LISTED AND PROCURED PER SPECIFICATION REQUIREMENTS.
3. THE ELECTRICAL WORK INCLUDES ALL LABOR AND MATERIAL DESCRIBED BY DRAWINGS AND SPECIFICATION INCLUDING INCIDENTAL WORK TO PROVIDE COMPLETE OPERATING AND APPROVED ELECTRICAL SYSTEM.
4. GENERAL CONTRACTOR SHALL PAY FEES FOR PERMITS, AND IS RESPONSIBLE FOR OBTAINING SAID PERMITS AND COORDINATION OF INSPECTIONS.
5. ELECTRICAL AND TELCO WIRING AT EXPOSED INDOOR LOCATIONS SHALL BE IN ELECTRICAL METALLIC TUBING OR RIGID NONMETALLIC TUBING (RIGID SCHEDULE 40 PVC OR RIGID SCHEDULE 80 PVC FOR LOCATIONS SUBJECT TO PHYSICAL DAMAGE) (AS PERMITTED BY CODE).
6. ELECTRICAL AND TELCO WIRING AT CONCEALED INDOOR LOCATIONS SHALL BE IN ELECTRICAL METALLIC TUBING, ELECTRICAL NONMETALLIC TUBING, OR RIGID NONMETALLIC TUBING (RIGID SCHEDULE 40 PVC AS PERMITTED BY CODE).
7. ELECTRICAL AND TELCO WIRING OUTSIDE A BUILDING, ABOVE GRADE AND EXPOSED TO WEATHER SHALL BE IN WATER TIGHT GALVANIZED RIGID STEEL CONDUITS (RGS) AND WHERE REQUIRED IN LIQUID TIGHT FLEXIBLE METAL OR NONMETALLIC CONDUITS.
8. BURIED CONDUIT SHALL BE RIGID NONMETALLIC CONDUIT (RIGID SCHEDULE 40 PVC); DIRECT BURIED IN AREAS OF OCCASIONAL LIGHT TRAFFIC, ENCASED IN REINFORCED CONCRETE IN AREAS OF HEAVY TRAFFIC.
9. LIQUID-TIGHT FLEXIBLE METALLIC CONDUIT SHALL BE USED INDOORS AND OUTDOORS IN AREAS WHERE VIBRATION OCCURS AND FLEXIBILITY IS NEEDED.
10. ELECTRICAL WIRING SHALL BE COPPER WITH TYPE THHN, THWN-2, OR THIN INSULATION.
11. RUN ELECTRICAL CONDUIT OR CABLE BETWEEN ELECTRICAL UTILITY DEMARCATION POINT AND PROJECT OWNER CELL SITE PPC AS INDICATED ON THIS DRAWING. PROVIDE FULL LENGTH PULL ROPE. COORDINATE INSTALLATION WITH UTILITY COMPANY.
12. RUN TELCO CONDUIT OR CABLE BETWEEN TELEPHONE UTILITY DEMARCATION POINT AND PROJECT OWNER CELL SITE TELCO CABINET AND BTS CABINET AS INDICATED ON THIS DRAWING. PROVIDE FULL LENGTH PULL ROPE IN INSTALLED TELCO CONDUIT. PROVIDE GREENLEE CONDUIT MEASURING TAPE AT EACH END.
13. ALL EQUIPMENT LOCATED OUTSIDE SHALL HAVE NEMA 3R ENCLOSURE.
14. GROUNDING SHALL COMPLY WITH NEC ART. 250. ADDITIONALLY, GROUNDING, BONDING AND LIGHTING PROTECTION SHALL BE DONE IN ACCORDANCE WITH T-MOBILE CELL SITE GROUNDING STANDARDS.
15. GROUND CABLE SHIELDS MINIMUM AT BOTH ENDS USING MANUFACTURERS CABLE GROUNDING KITS SUPPLIED BY PROJECT OWNER.
16. INSTALL #2 AWG GREEN-INSULATED STRANDED WIRE FOR ABOVE GRADE GROUNDING AND #2 BARE TINNED COPPER WIRE FOR BELOW GRADE GROUNDING UNLESS OTHERWISE NOTED.
17. ALL POWER AND GROUND CONNECTIONS TO BE CRIMP-STYLE, COMPRESSION WIRE LUGS AND WIRE NUTS BY HARGER (OR APPROVED EQUAL) RATED FOR OPERATION AT NO LESS THAN 75°C OR CADWELD EXOTHERMIC WELD. DO NOT ALLOW BARE COPPER WIRE TO BE IN CONTACT WITH GALVANIZED STEEL.
18. ROUTE GROUNDING CONDUCTORS ALONG THE SHORTEST AND STRAIGHTEST PATH POSSIBLE, EXCEPT AS OTHERWISE INDICATED. GROUNDING LEADS SHOULD NEVER BE BENT AT RIGHT ANGLE. ALWAYS MAKE AT LEAST 12" RADIUS BENDS. #6 WIRE CAN BE BENT AT 6" RADIUS WHEN NECESSARY. BOND ANY METAL OBJECTS WITHIN 6 FEET OF PROJECT OWNER EQUIPMENT OR CABINET TO MASTER GROUND BAR OR GROUNDING RING.
19. CONNECTIONS TO GROUND BARS SHALL BE MADE WITH TWO HOLE COMPRESSION TYPE COPPER LUGS. APPLY OXIDE INHIBITING COMPOUND TO ALL LOCATIONS.
20. APPLY OXIDE INHIBITING COMPOUND TO ALL MECHANICAL GROUND CONNECTIONS.
21. CONTRACTOR SHALL PROVIDE AND INSTALL OMNI DIRECTIONAL ELECTRONIC MARKER SYSTEM (EMS) BALLS OVER EACH GROUND ROD AND BONDING POINT BETWEEN EXISTING TOWER/ MONOPOLE GROUNDING RING AND EQUIPMENT GROUNDING RING.
22. CONTRACTOR SHALL TEST COMPLETED GROUND SYSTEM AND RECORD RESULTS FOR PROJECT CLOSE-OUT DOCUMENTATION. 5 OHMNS MINIMUM RESISTANCE REQUIRED.
23. CONTRACTOR SHALL CONDUCT ANTENNA, CABLE, AND LNA RETURN-LOSS AND DISTANCE-TO-FAULT MEASUREMENTS (SWEEP TESTS) AND RECORD RESULTS FOR PROJECT CLOSE OUT.
24. THE T-MOBILE ELECTRICAL EQUIPMENT INCLUDING PANEL, SWITCH GEAR AND DISCONNECT ARE TO BE LABELED WITH ENGRAVED BAKELITE LABELS.

GENERAL NOTES

1. THE CONTRACTOR SHALL COMPLY WITH ALL APPLICABLE CODES ORDINANCES, LAWS AND REGULATIONS OF ALL MUNICIPALITIES, UTILITIES COMPANY OR OTHER PUBLIC AUTHORITIES.
2. THE CONTRACTOR SHALL BE RESPONSIBLE FOR OBTAINING ALL PERMITS AND INSPECTIONS THAT MAY BE REQUIRED BY ANY FEDERAL, STATE, COUNTY OR MUNICIPAL AUTHORITIES.
3. THE CONTRACTOR SHALL NOTIFY THE CONSTRUCTION MANAGER, IN WRITING, OF ANY CONFLICTS, ERRORS OR OMISSIONS PRIOR TO THE SUBMISSION OF BIDS OR PERFORMANCE OF WORK. MINOR OMISSIONS OR ERRORS IN THE BID DOCUMENTS SHALL NOT RELIEVE THE CONTRACTOR FROM RESPONSIBILITY FOR THE OVERALL INTENT OF THESE DRAWINGS.
4. THE CONTRACTOR SHALL BE RESPONSIBLE FOR PROTECTING ALL EXISTING SITE IMPROVEMENTS PRIOR TO COMMENCING CONSTRUCTION. THE CONTRACTOR SHALL REPAIR ANY DAMAGE CAUSED AS A RESULT OF CONSTRUCTION OF THIS FACILITY.
5. THE SCOPE OF WORK FOR THIS PROJECT SHALL INCLUDE PROVIDING ALL MATERIALS, EQUIPMENT AND LABOR REQUIRED TO COMPLETE THIS PROJECT. ALL EQUIPMENT SHALL BE INSTALLED IN ACCORDANCE WITH THE MANUFACTURER'S RECOMMENDATIONS.
6. THE CONTRACTOR SHALL VISIT THE PROJECT SITE PRIOR TO SUBMITTING A BID TO VERIFY THAT THE PROJECT CAN BE CONSTRUCTED IN ACCORDANCE WITH THE CONTRACT DOCUMENTS.
7. CONTRACTOR SHALL VERIFY ANTENNA ELEVATION AND AZIMUTH WITH RF ENGINEERING PRIOR TO INSTALLATION.
8. ALL STRUCTURAL ELEMENTS SHALL BE HOT DIPPED GALVANIZED STEEL.
9. CONTRACTOR SHALL MAKE A UTILITY "ONE CALL" TO LOCATE ALL UTILITIES PRIOR TO EXCAVATING.
10. IF ANY UNDERGROUND UTILITIES OR STRUCTURES EXIST BENEATH THE PROJECT AREA, CONTRACTOR MUST LOCATE IT AND CONTACT THE APPLICANT & THE OWNER'S REPRESENTATIVE.
11. OCCUPANCY IS LIMITED TO PERIODIC MAINTENANCE AND INSPECTION BY TECHNICIANS APPROXIMATELY 2 TIMES PER MONTH.
12. PROPERTY LINE INFORMATION WAS PREPARED USING DEEDS, TAX MAPS, AND PLANS OF RECORD AND SHOULD NOT BE CONSTRUED AS AN ACCURATE BOUNDARY SURVEY.
13. THIS PLAN IS SUBJECT TO ALL EASEMENTS AND RESTRICTIONS OF RECORD.
14. THE PROPOSED FACILITY WILL CAUSE ONLY A "DE MINIMIS" INCREASE IN STORMWATER RUNOFF. THEREFORE, NO DRAINAGE STRUCTURES ARE PROPOSED.
15. NO SIGNIFICANT NOISE, SMOKE, DUST, OR ODOR WILL RESULT FROM THIS FACILITY.
16. THE FACILITY IS UNMANNED AND NOT INTENDED FOR HUMAN HABITATION (NO HANDICAP ACCESS REQUIRED).
17. THE FACILITY IS UNMANNED AND DOES NOT REQUIRE POTABLE WATER OR SANITARY SERVICE.
18. POWER TO THE FACILITY WILL BE MONITORED BY A SEPARATE METER.

STRUCTURAL NOTES

1. THE STRUCTURAL STEEL CONTRACTOR SHALL BE RESPONSIBLE FOR VERIFYING THE ANCHOR BOLT LOCATIONS, ELEVATION OF TOP OF CONCRETE AND BEARING PLATES, ALIGNMENT ETC. PRIOR TO START OF STEEL ERECTION.
2. THE LATEST EDITION OF THE FOLLOWING SPECIFICATIONS SHALL GOVERN:
   A. AISC - "ALLOWABLE STRESS DESIGN SPECIFICATION FOR STRUCTURAL STEEL BUILDINGS".
   B. AISC - "CODE OF STANDARD PRACTICE FOR STEEL BUILDINGS AND BRIDGES".
   C. AWS - "D1.1 STRUCTURAL WELDING CODE - STEEL".
3. MATERIAL, UNLESS OTHERWISE NOTED, SHALL CONFORM TO THE FOLLOWING ASTM SPECIFICATIONS

STRUCTURAL WIDE FLANGE & M SHAPES	A992 OR A572 FY = 50KSI
OTHER STRUCTURAL SHAPES AND PLATES	A36 FY = 36 KSI
STRUCTURAL TUBING	A500, GRADE B FY = 46 KSI
HIGH STRENGTH BOLTS	A325
THREADED RODS	A354, GRADE BC
ANCHOR BOLTS	A325 OR A354 BC
PIPE (HANDRAIL)	SCH 40 PIPE

4. HOLES IN STEEL SHALL BE DRILLED OR PUNCHED. ALL SLOTTED HOLES SHALL BE PROVIDED WITH SMOOTH EDGES. BURNING OF HOLES AND TORCH CUTTING AT THE SITE IS NOT PERMITTED. ALL HOLES IN BEARING PLATES SHALL BE DRILLED.
5. ALL STEEL TO BE HOT-DIPPED GALVANIZED AFTER FABRICATION PER ASTM A123.
6. ALL BOLTS SHALL BE TIGHTENED USING TURN-OF-THE-NUT METHOD PER AISC SPECIFICATIONS USING STANDARD HOLES.
7. CONTRACTOR TO FIELD VERIFY ALL DIMENSIONS AND FIT PRIOR TO FABRICATION.

APPLICANT

T-Mobile

T-MOBILE NORTHEAST LLC

12050 BALTIMORE AVENUE
BELTSVILLE, MD 20705
OFFICE: (240) 264-8600
FAX: (240) 264-8610

ENGINEER

NB+C TOTALLY COMMITTED.

NB+C ENGINEERING SERVICES, LLC.
6095 MARSHALEE DRIVE, SUITE 300
ELKRIDGE, MD 21075
(410) 712-7092

SITE INFORMATION

7HCH307A
CHARLES TOWN LOCUST
HILL WATERTANK
325 SAWGRASS DRIVE
CHARLES TOWN, WV 25414
JEFFERSON COUNTY

DESIGN RECORD

REVISIONS

REV	DATE	DESCRIPTION	BY
1	05/19/2022	REV PER COMMENT	BWB
0	05/10/2022	FINAL CDs	AMM

PROFESSIONAL STAMP

TRENT TRAVIS SNARR
REGISTERED
21726
STATE OF
WEST VIRGINIA
PROFESSIONAL ENGINEER
05/19/22

ENGINEER

TRENT TRAVIS SNARR, P.E.
WEST VIRGINIA PROFESSIONAL ENGINEER
LICENSE #21726

SHEET TITLE

GENERAL NOTES

SHEET NUMBER

GN-1



1 SP-1 SITE PLAN
SCALE: 1" = 50' (22X34)
SCALE: 1" = 100' (11X17)

GRAPHIC SCALE

50 0 25 50 100 200

1 INCH = 50 FEET (22X34)
1 INCH = 100 FEET (11X17)

ZONING INFORMATION

JURISDICTION:	JEFFERSON COUNTY	
ZONING:	R - RESIDENTAIL	
DIMENSION	EXISTING ±	PROPOSED ±
FRONT YARD SETBACK:	68'-6"	NO CHANGE
SIDE YARD SETBACK:	100'-11"	NO CHANGE
REAR YARD SETBACK:	87'-7"	NO CHANGE
LOT AREA:	0.85 ± ACRES	
(ALL MEASUREMENTS ARE IN FEET ± UNLESS OTHERWISE NOTED)		

NOTES:

1) SITE PLAN IS NOT THE RESULT OF A SURVEY. IT IS BASED ON FIELD MEASUREMENTS AND SCALED ASSESSORS MAPS AVAILABLE. ALL INFORMATION SHOWN IS APPROXIMATE ONLY AND SUBJECT TO ANY CONDITION THAT A SURVEY MAY REVEAL.

2) ALL SETBACKS SHOWN ARE FROM EXISTING WATER TANK TO EXISTING PROPERTY LINES.

LEGEND

- PROPERTY LINE – SUBJECT PARCEL
- PROPERTY LINE – ABUTTERS
- EXISTING FENCE LINE
- EXISTING ROAD
- EXISTING BUILDING

APPLICANT

T-Mobile

T-MOBILE NORTHEAST LLC

12050 BALTIMORE AVENUE
BELTSVILLE, MD 20705
OFFICE: (240) 264-8600
FAX: (240) 264-8610

ENGINEER

NB+C™
TOTALLY COMMITTED.

NB+C ENGINEERING SERVICES, LLC.
6095 MARSHALEE DRIVE, SUITE 300
ELKRIDGE, MD 21075
(410) 712-7092

SITE INFORMATION

7HCH307A
CHARLES TOWN LOCUST HILL WATERTANK
325 SAWGRASS DRIVE
CHARLES TOWN, WV 25414
JEFFERSON COUNTY

DESIGN RECORD

REVISIONS

REV	DATE	DESCRIPTION	BY
1	05/19/2022	REV PER COMMENT	BWB
0	05/10/2022	FINAL CDs	AMM

PROFESSIONAL STAMP

TRENT TRAVIS SNARR
REGISTERED
21726
STATE OF
05/19/22
VIRGINIA
PROFESSIONAL ENGINEER

ENGINEER

TRENT TRAVIS SNARR, P.E.
WEST VIRGINIA PROFESSIONAL ENGINEER
LICENSE #21726

SHEET TITLE

SITE PLAN

SHEET NUMBER

SP-1

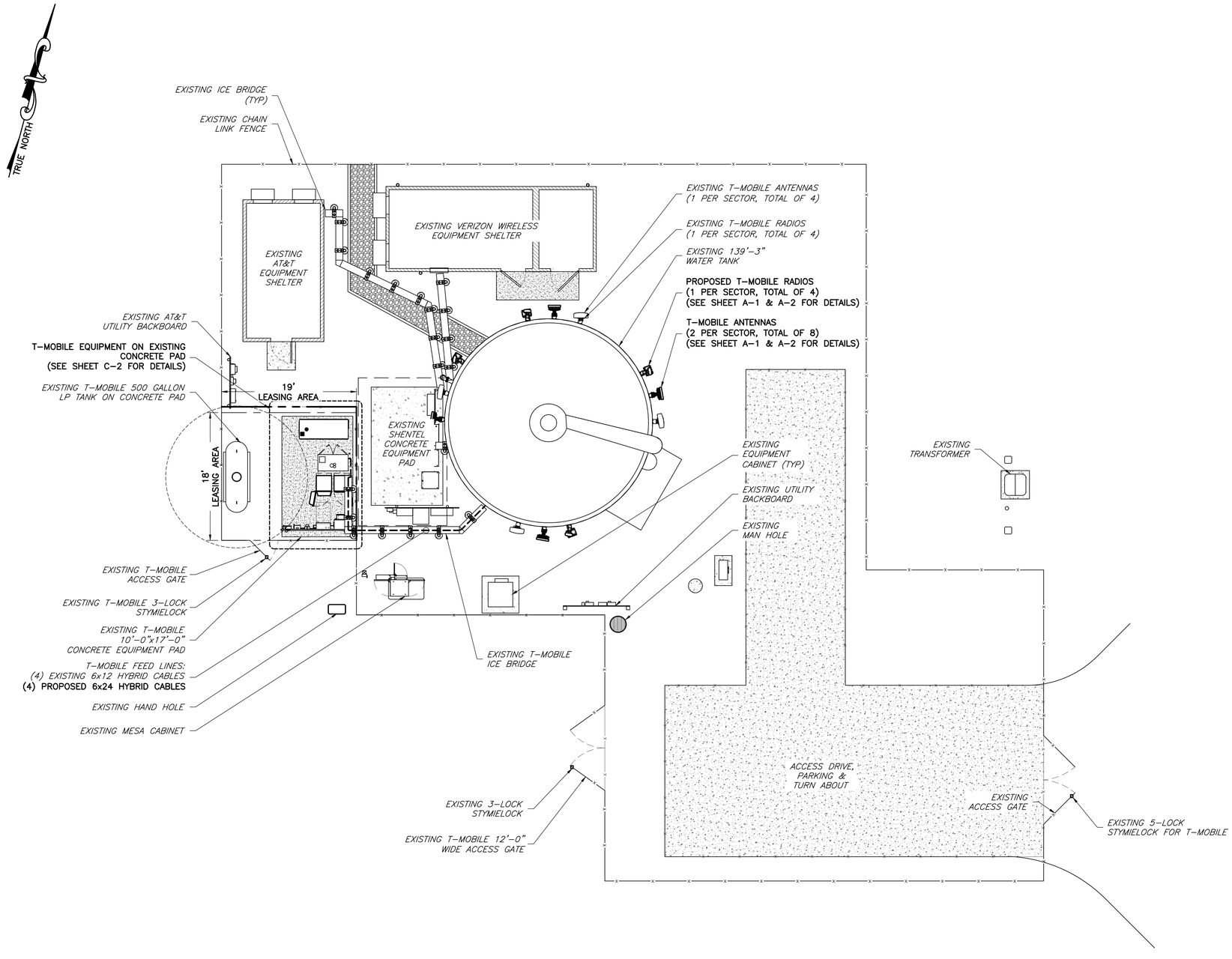

1 / C-1 COMPOUND PLAN
SCALE: 1" = 10' (22X34)
SCALE: 1" = 20' (11X17)

GRAPHIC SCALE

10 0 5 10 20 40

1 INCH = 10 FEET (22X34)
1 INCH = 20 FEET (11X17)

APPLICANT

T-MOBILE NORTHEAST LLC

12050 BALTIMORE AVENUE
BELTSVILLE, MD 20705
OFFICE: (240) 264-8600
FAX: (240) 264-8610

ENGINEER

NB+C ENGINEERING SERVICES, LLC.
6095 MARSHALEE DRIVE, SUITE 300
ELKRIDGE, MD 21075
(410) 712-7092

SITE INFORMATION

7HCH307A
CHARLES TOWN LOCUST HILL WATERTANK
325 SAWGRASS DRIVE
CHARLES TOWN, WV 25414
JEFFERSON COUNTY

DESIGN RECORD

REVISIONS

REV	DATE	DESCRIPTION	BY
1	05/19/2022	REV PER COMMENT	BWB
0	05/10/2022	FINAL CDs	AMM

PROFESSIONAL STAMP

TRENT TRAVIS SNARR REGISTERED 21726 STATE OF VIRGINIA PROFESSIONAL ENGINEER 05/19/22

ENGINEER

TRENT TRAVIS SNARR, P.E.
WEST VIRGINIA PROFESSIONAL ENGINEER
LICENSE #21726

SHEET TITLE

COMPOUND PLAN

SHEET NUMBER

C-1

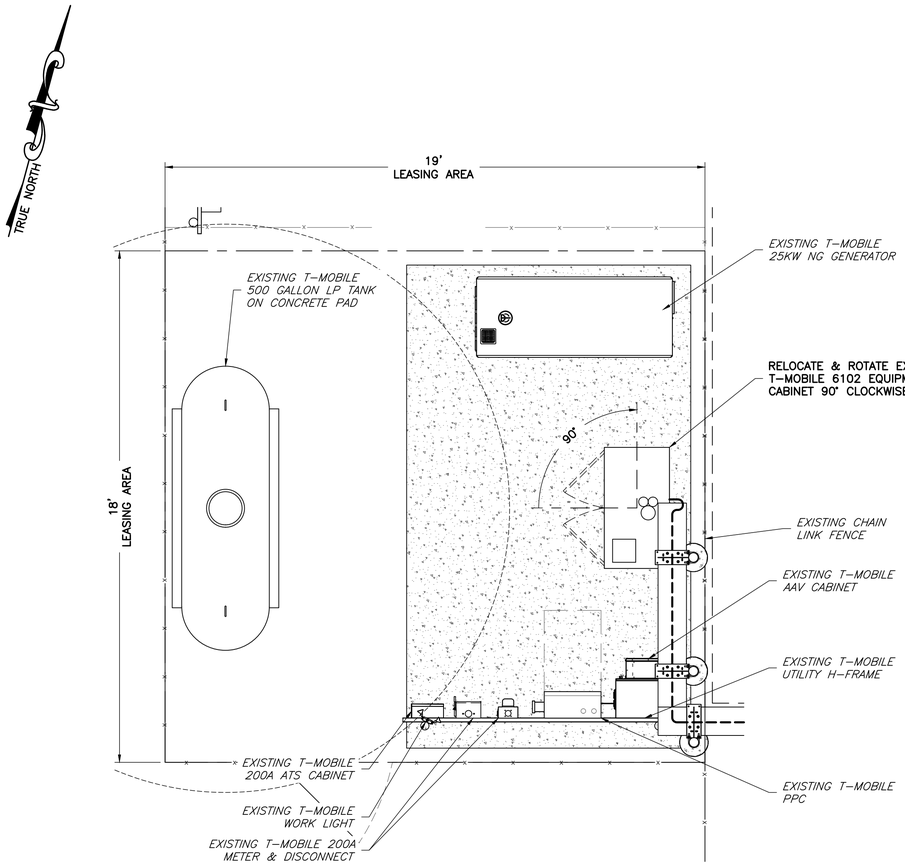

1 C-2 **EXISTING EQUIPMENT PLAN**
SCALE: 3/8" = 1' (22X34)
SCALE: 3/16" = 1' (11X17)

GRAPHIC SCALE
4 0 1 2 4 8
3/8 INCH = 1 FOOT (22X34)
3/16 INCH = 1 FOOT (11X17)

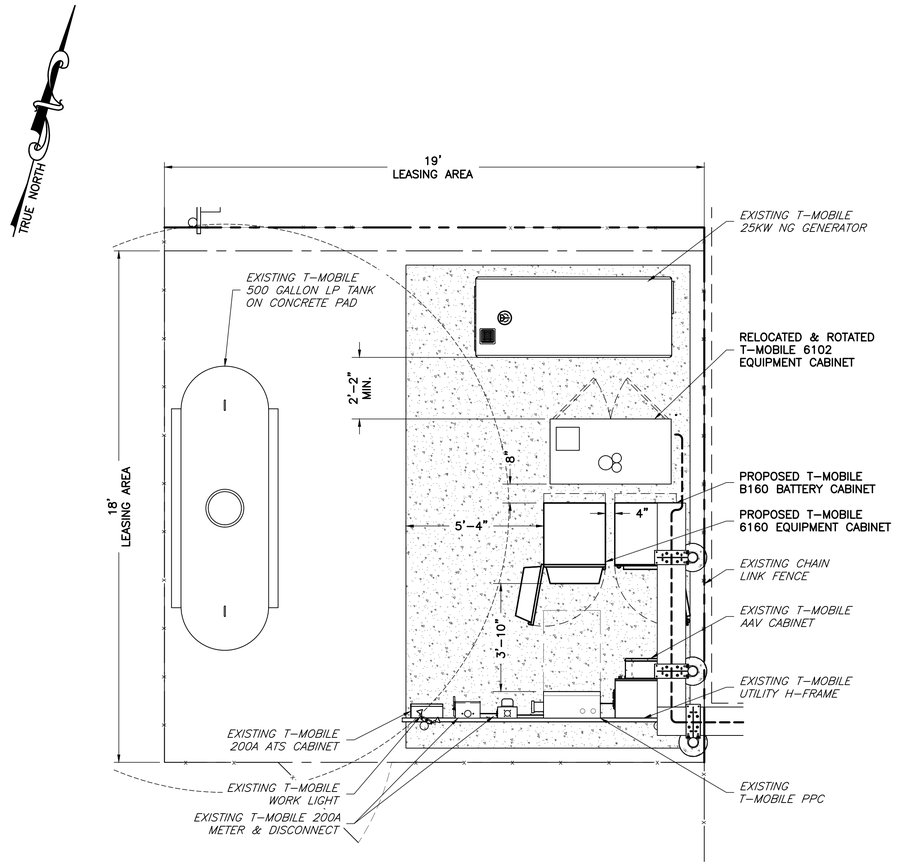

2 C-2 **PROPOSED EQUIPMENT PLAN**
SCALE: 3/8" = 1' (22X34)
SCALE: 3/16" = 1' (11X17)

GRAPHIC SCALE
4 0 1 2 4 8
3/8 INCH = 1 FOOT (22X34)
3/16 INCH = 1 FOOT (11X17)

APPLICANT

T-MOBILE NORTHEAST LLC

12050 BALTIMORE AVENUE
BELTSVILLE, MD 20705
OFFICE: (240) 264-8600
FAX: (240) 264-8610

ENGINEER

NB+C ENGINEERING SERVICES, LLC.
6095 MARSHALEE DRIVE, SUITE 300
ELKRIDGE, MD 21075
(410) 712-7092

SITE INFORMATION

7HCH307A
CHARLES TOWN LOCUST
HILL WATERTANK
325 SAWGRASS DRIVE
CHARLES TOWN, WV 25414
JEFFERSON COUNTY

DESIGN RECORD

REVISIONS

REV	DATE	DESCRIPTION	BY
1	05/19/2022	REV PER COMMENT	BWB
0	05/10/2022	FINAL CDs	AMM

PROFESSIONAL STAMP

TRENT TRAVIS SNARR
REGISTERED
21726
STATE OF
05/19/22
VIRGINIA
PROFESSIONAL ENGINEER

ENGINEER

TRENT TRAVIS SNARR, P.E.
WEST VIRGINIA PROFESSIONAL ENGINEER
LICENSE #21726

SHEET TITLE

EQUIPMENT PLANS

SHEET NUMBER

C-2

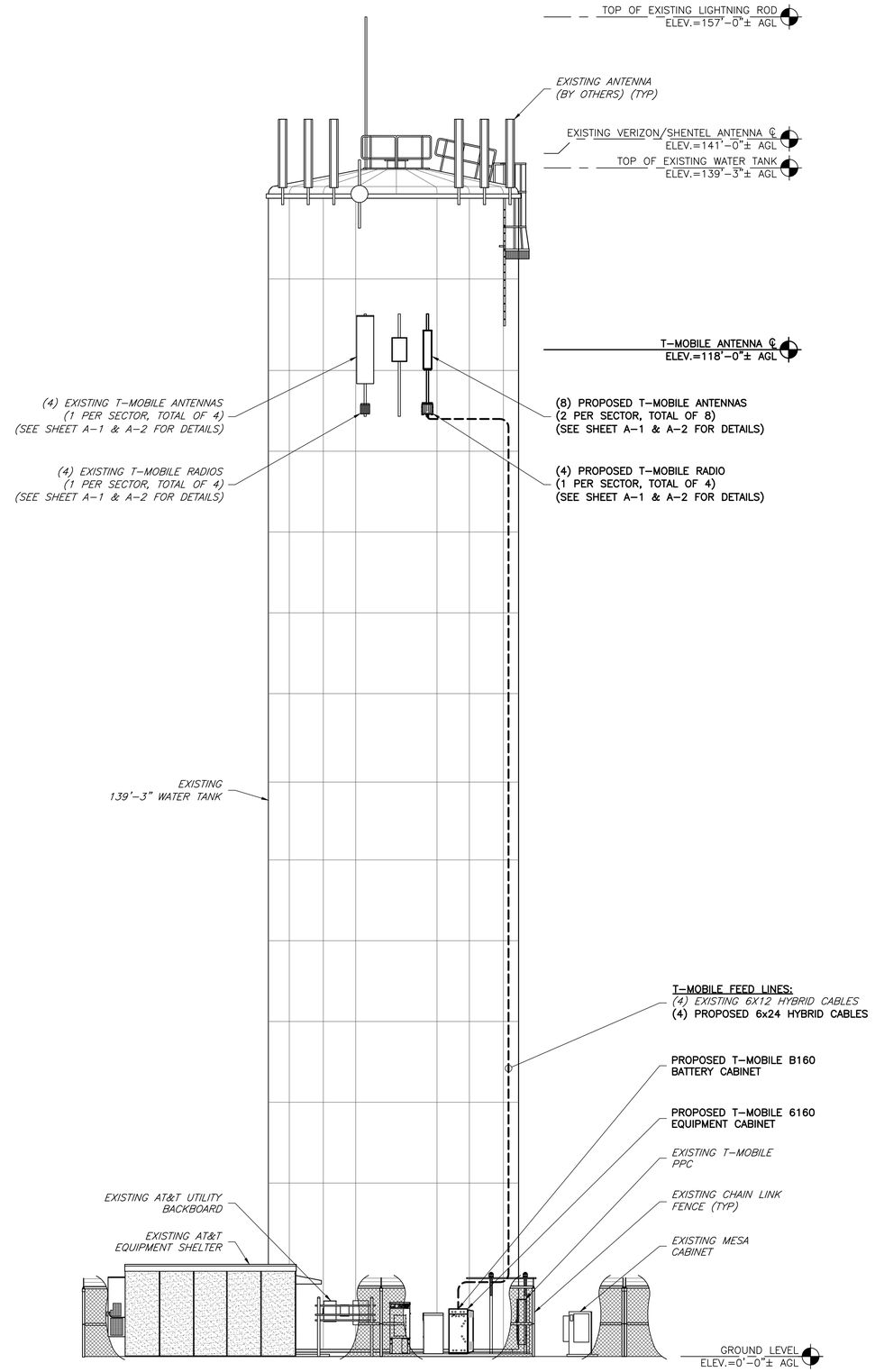

GENERAL ANTENNA NOTES

1. ALL ANTENNAS TO BE FURNISHED WITH DOWNTILT BRACKETS. CONTRACTOR IS TO COORDINATE AND VERIFY THE PROPOSED DOWNTILTS WITH T-MOBILE MANAGER PRIOR TO CONSTRUCTION.
2. ANTENNA CENTERLINE HEIGHT IS IN REFERENCE TO ELEVATION 0.0'. (EXISTING GRADE)
3. CHECK WITH RF ENGINEER FOR LATEST ANTENNA TYPE & AZIMUTH.
4. CONTRACTOR SHALL VERIFY ANTENNA TYPE AND AZIMUTH WITH CONSTRUCTION MANAGER PRIOR TO CONSTRUCTION.
5. ALL CABLE LENGTHS ARE ESTIMATED AND SHALL BE FIELD VERIFIED BY THE CONTRACTOR.
6. COLOR TAPE MARKINGS MUST BE 3/4" WIDE AND UV RESISTANT, SUCH AS SCOTCH 35 VINYL ELECTRICAL COLOR CODING TAPE.
7. CONTRACTOR SHALL COORDINATE COLOR CODINGS IN THE FIELD WITH T-MOBILE REPRESENTATIVE.

1 / C-3 ELEVATION
SCALE: 1/8" = 1' (22X34)
SCALE: 1/16" = 1' (11X17)

GRAPHIC SCALE
16 8 0 1 2 4 8 16
1/8 INCH = 1 FOOT (22X34)
1/16 INCH = 1 FOOT (11X17)

APPLICANT

T-MOBILE NORTHEAST LLC
12050 BALTIMORE AVENUE
BELTSVILLE, MD 20705
OFFICE: (240) 264-8600
FAX: (240) 264-8610

ENGINEER

NB+C ENGINEERING SERVICES, LLC.
6095 MARSHALEE DRIVE, SUITE 300
ELKRIDGE, MD 21075
(410) 712-7092

SITE INFORMATION

7HCH307A
CHARLES TOWN LOCUST HILL WATERTANK
325 SAWGRASS DRIVE
CHARLES TOWN, WV 25414
JEFFERSON COUNTY

DESIGN RECORD

REVISIONS

REV	DATE	DESCRIPTION	BY
1	05/19/2022	REV PER COMMENT	BWB
0	05/10/2022	FINAL CDs	AMM

PROFESSIONAL STAMP

TRENT TRAVIS SNARR
REGISTERED
21726
05/19/22
STATE OF WEST VIRGINIA
PROFESSIONAL ENGINEER

ENGINEER

TRENT TRAVIS SNARR, P.E.
WEST VIRGINIA PROFESSIONAL ENGINEER
LICENSE #21726

SHEET TITLE

ELEVATION

SHEET NUMBER

C-3

ANTENNA SCHEDULE

SECTOR	STATUS	ANTENNA MANUFACTURER	ANTENNA MODEL	ANTENNA DIMENSIONS (HxWxD)	RAD CENTER	AZIMUTH	ELEC DOWNTILT	MECH DOWNTILT	RRU QUANTITY & MODEL	TMA/DIPLEXER QUANTITY & MODEL	CABLE QUANTITY & TYPE	CABLE LENGTH
A1	PROPOSED	COMMSCOPE	VV-65A-R1	54.72"x12.01"x4.65"	118.0'	0°	2°/2°	0°	(1) PROPOSED RADIO 4460 B25+B66	–	*(1) EXISTING 6x12 HYBRID CABLE* (1) PROPOSED 6x24 HYBRID CABLE	±220'
A2	EXISTING TO BE REMOVED	ERICSSON	AIR32DB B2A/B66A	56.60"x12.90"x8.70"	118.0'	0°	2°/2°/2°/2°	0°	–	–		
A2	PROPOSED	ERICSSON	AIR6449 B41	33.1"x20.5"x8.5"	118.0'	0°	2°/2°	0°	–	–		
A3	*EXISTING*	*RFS*	*APXVAARR24_43-U-NA20*	*95.90"x24.00"x8.50"*	*118.0'*	*0°*	3°/3°	*0°*	*(1) EXISTING RADIO 4449 B71+B85* (1) EXISTING RADIO 2217 TO BE REMOVED	–		
B1	PROPOSED	COMMSCOPE	VV-65A-R1	54.72"x12.01"x4.65"	118.0'	80°	2°/2°	0°	(1) PROPOSED RADIO 4460 B25+B66	–	*(1) EXISTING 6x12 HYBRID CABLE* (1) PROPOSED 6x24 HYBRID CABLE	±220'
B2	EXISTING TO BE REMOVED	ERICSSON	AIR32DB B2A/B66A	56.60"x12.90"x8.70"	118.0'	80°	2°/2°/2°/2°	0°	–	–		
B2	PROPOSED	ERICSSON	AIR6449 B41	33.1"x20.5"x8.5"	118.0'	80°	2°/2°	0°	–	–		
B3	*EXISTING*	*RFS*	*APXVAARR24_43-U-NA20*	*95.90"x24.00"x8.50"*	*118.0'*	*80°*	3°/3°	*0°*	*(1) EXISTING RADIO 4449 B71+B85* (1) EXISTING RADIO 2217 TO BE REMOVED	–		
C1	PROPOSED	COMMSCOPE	VV-65A-R1	54.72"x12.01"x4.65"	118.0'	190°	2°/2°	0°	(1) PROPOSED RADIO 4460 B25+B66	–	*(1) EXISTING 6x12 HYBRID CABLE* (1) PROPOSED 6x24 HYBRID CABLE	±200'
C2	EXISTING TO BE REMOVED	ERICSSON	AIR32DB B2A/B66A	56.60"x12.90"x8.70"	118.0'	190°	2°/2°/2°/2°	0°	–	–		
C2	PROPOSED	ERICSSON	AIR6449 B41	33.1"x20.5"x8.5"	118.0'	190°	2°/2°	0°	–	–		
C3	*EXISTING*	*RFS*	*APXVAARR24_43-U-NA20*	*95.90"x24.00"x8.50"*	*118.0'*	*190°*	3°/3°	*0°*	*(1) EXISTING RADIO 4449 B71+B85* (1) EXISTING RADIO 2217 TO BE REMOVED	–		
D1	EXISTING TO BE REMOVED	ERICSSON	AIR32DB B2A/B66A	56.60"x12.90"x8.70"	118.0'	280°	2°/2°/2°/2°	0°	–	–	*(1) EXISTING 6x12 HYBRID CABLE* (1) PROPOSED 6x24 HYBRID CABLE	±200'
D1	PROPOSED	ERICSSON	AIR6449 B41	33.1"x20.5"x8.5"	118.0'	280°	2°/2°	0°	–	–		
D2	*EXISTING*	*RFS*	*APXVAARR24_43-U-NA20*	*95.90"x24.00"x8.50"*	*118.0'*	*280°*	3°/3°	*0°*	*(1) EXISTING RADIO 4449 B71+B85* (1) EXISTING RADIO 2217 TO BE REMOVED	–		
D3	PROPOSED	COMMSCOPE	VV-65A-R1	54.72"x12.01"x4.65"	118.0'	280°	2°/2°	0°	(1) PROPOSED RADIO 4460 B25+B66	–		

NOTES:
1. CONTRACTOR TO VERIFY PROPOSED ANTENNA INFORMATION IS THE MOST CURRENT DATA AT TIME OF CONSTRUCTION.
2. CONTRACTOR TO CONFIRM CABLE LENGTHS PRIOR TO CONSTRUCTION.

1 / A-1 ANTENNA CONFIGURATION SCHEDULE
NOT TO SCALE

APPLICANT

T-Mobile

T-MOBILE NORTHEAST LLC

12050 BALTIMORE AVENUE
BELTSVILLE, MD 20705
OFFICE: (240) 264-8600
FAX: (240) 264-8610

ENGINEER

NB+C™ TOTALLY COMMITTED.

NB+C ENGINEERING SERVICES, LLC.
6095 MARSHALEE DRIVE, SUITE 300
ELKRIDGE, MD 21075
(410) 712-7092

SITE INFORMATION

7HCH307A
CHARLES TOWN LOCUST
HILL WATERTANK
325 SAWGRASS DRIVE
CHARLES TOWN, WV 25414
JEFFERSON COUNTY

DESIGN RECORD

REVISIONS

REV	DATE	DESCRIPTION	BY
1	05/19/2022	REV PER COMMENT	BWB
0	05/10/2022	FINAL CDs	AMM

PROFESSIONAL STAMP

TRENT TRAVIS SNARR
REGISTERED
21726
STATE OF
WEST VIRGINIA
PROFESSIONAL ENGINEER
05/19/22

ENGINEER

TRENT TRAVIS SNARR, P.E.
WEST VIRGINIA PROFESSIONAL ENGINEER
LICENSE #21726

SHEET TITLE

ANTENNA SCHEDULE

SHEET NUMBER

A-1

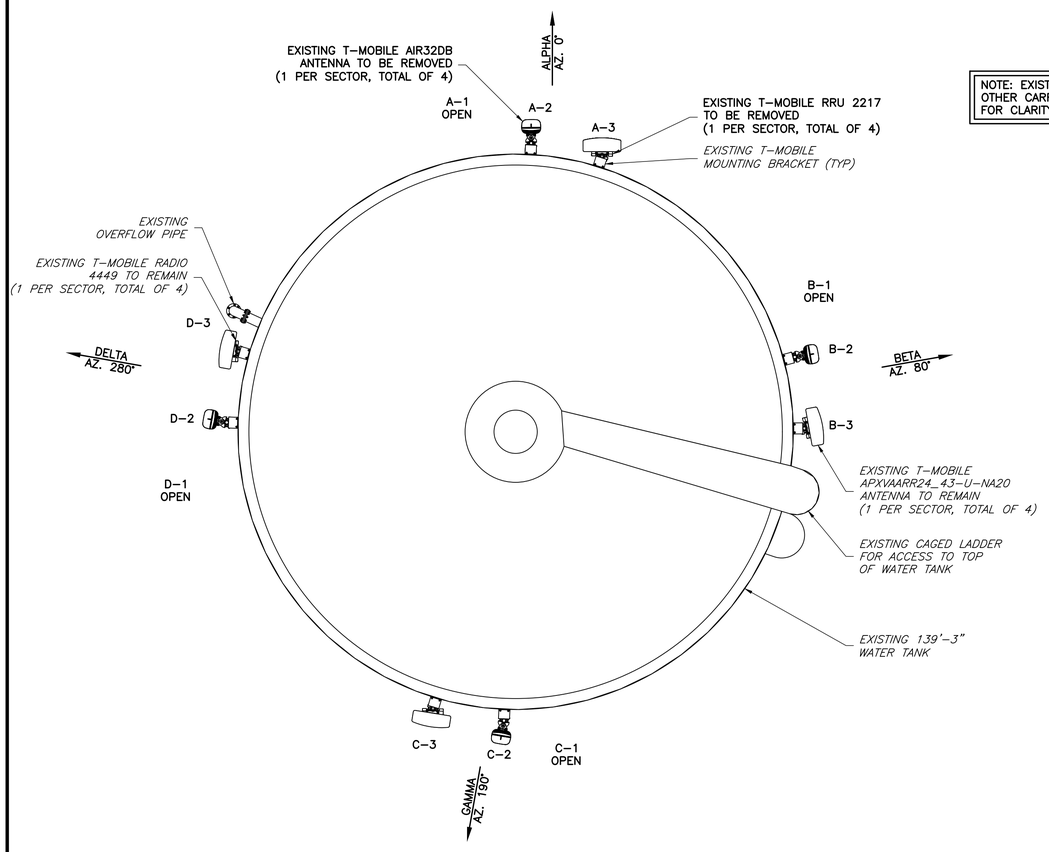

1 A-2 EXISTING ANTENNA ORIENTATION PLAN
NOT TO SCALE

APPROX TRUE NORTH

NOTE: EXISTING ANTENNAS BY OTHER CARRIERS ARE NOT SHOWN FOR CLARITY PURPOSES.

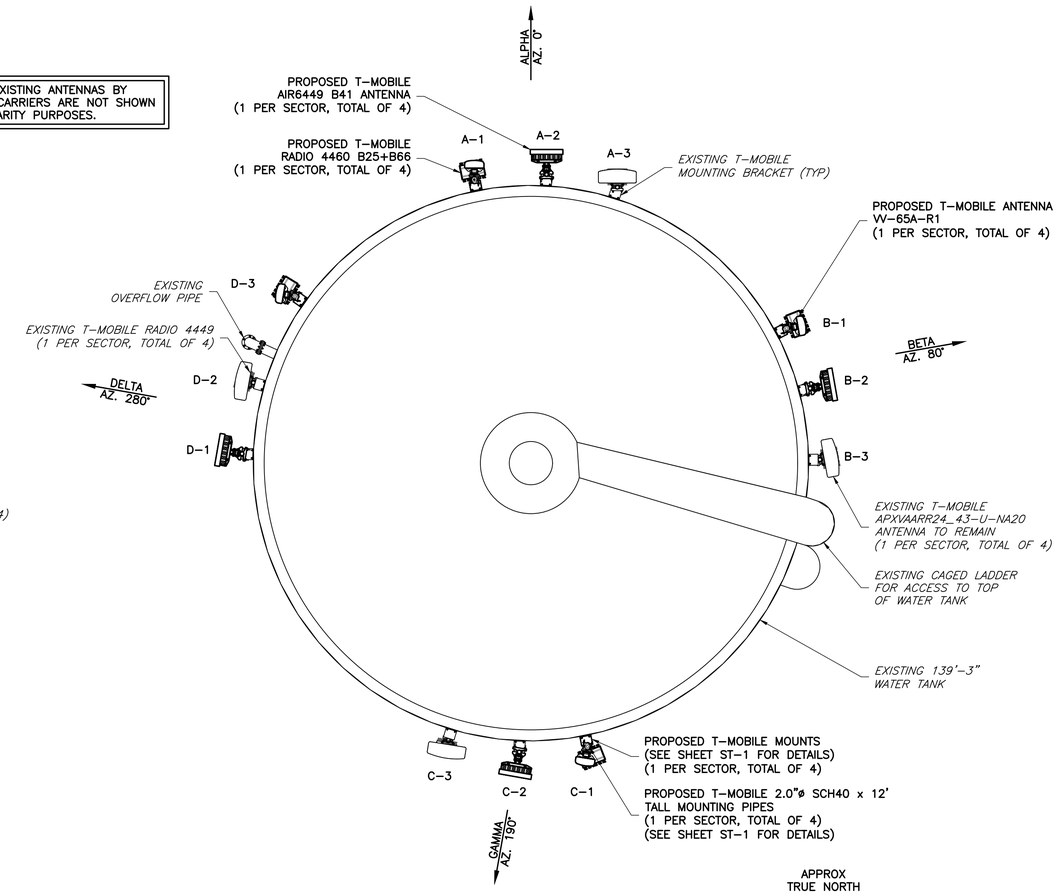

2 A-2 PROPOSED ANTENNA ORIENTATION PLAN
NOT TO SCALE

APPROX TRUE NORTH

APPLICANT

T-Mobile

T-MOBILE NORTHEAST LLC

12050 BALTIMORE AVENUE
BELTSVILLE, MD 20705
OFFICE: (240) 264-8600
FAX: (240) 264-8610

ENGINEER

NB+C™ TOTALLY COMMITTED.

NB+C ENGINEERING SERVICES, LLC.
6095 MARSHALEE DRIVE, SUITE 300
ELKRIDGE, MD 21075
(410) 712-7092

SITE INFORMATION

7HCH307A
CHARLES TOWN LOCUST HILL WATERTANK
325 SAWGRASS DRIVE
CHARLES TOWN, WV 25414
JEFFERSON COUNTY

DESIGN RECORD

REVISIONS

REV	DATE	DESCRIPTION	BY
1	05/19/2022	REV PER COMMENT	BWB
0	05/10/2022	FINAL CDs	AMM

PROFESSIONAL STAMP

TRENT TRAVIS SNARR REGISTERED 21726 STATE OF WEST VIRGINIA PROFESSIONAL ENGINEER
05/19/22

ENGINEER

TRENT TRAVIS SNARR, P.E.
WEST VIRGINIA PROFESSIONAL ENGINEER
LICENSE #21726

SHEET TITLE

ANTENNA PLANS

SHEET NUMBER

A-2

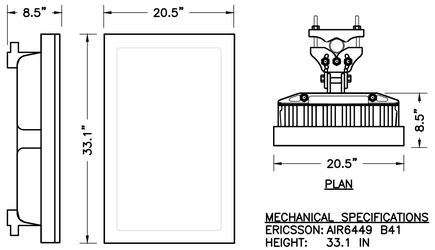

MECHANICAL SPECIFICATIONS
ERICSSON: AIR6449 B41
HEIGHT: 33.1 IN
LENGTH: 20.5 IN
WIDTH: 8.5 IN
WEIGHT: 101.6 LBS
MOUNTING KIT: SXK 109 2065/1
WEIGHT: 13.0 LBS

1 A-3 ERICSSON PANEL ANTENNA
NOT TO SCALE

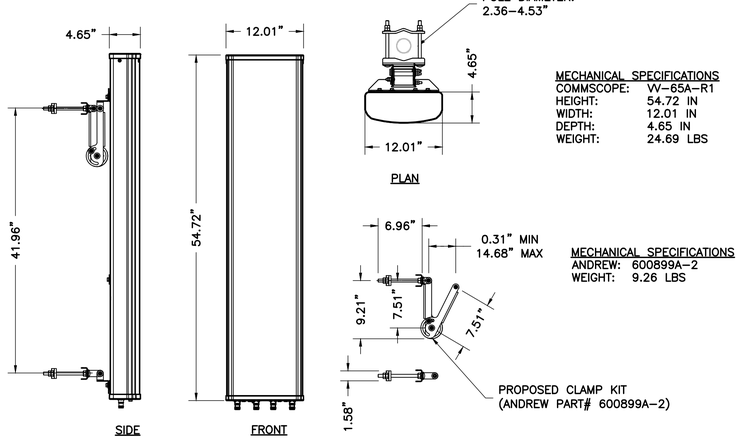

MECHANICAL SPECIFICATIONS
COMMSCOPE: VV–65A–R1
HEIGHT: 54.72 IN
WIDTH: 12.01 IN
DEPTH: 4.65 IN
WEIGHT: 24.69 LBS

MECHANICAL SPECIFICATIONS
ANDREW: 600899A–2
WEIGHT: 9.26 LBS

2 A-3 COMMSCOPE PANEL ANTENNA
NOT TO SCALE

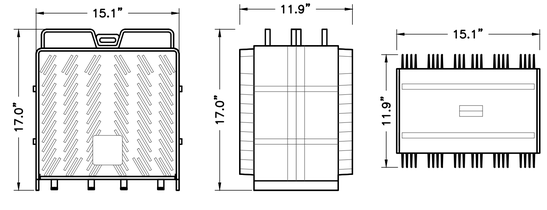

SIZE AND WEIGHT TABLE

RRU	HEIGHT	WIDTH	DEPTH	WEIGHT W/O BRACKET
RADIO 4460 B25+B66	17.0"	15.1"	11.9"	~109.0 LBS.

NOTES:

1. DO NOT PAINT THE RRU. RRU SOLAR SHIELD CAN BE PAINTED PER MANUFACTURER'S METHOD OF PROCEDURE.

3 A-2 ERICSSON REMOTE RADIO UNIT (RRU)
NTS

APPLICANT

T-MOBILE NORTHEAST LLC

12050 BALTIMORE AVENUE
BELTSVILLE, MD 20705
OFFICE: (240) 264-8600
FAX: (240) 264-8610

ENGINEER

NB+C ENGINEERING SERVICES, LLC.
6095 MARSHALEE DRIVE, SUITE 300
ELKRIDGE, MD 21075
(410) 712-7092

SITE INFORMATION

7HCH307A
CHARLES TOWN LOCUST
HILL WATERTANK
325 SAWGRASS DRIVE
CHARLES TOWN, WV 25414
JEFFERSON COUNTY

DESIGN RECORD

REVISIONS

REV	DATE	DESCRIPTION	BY
1	05/19/2022	REV PER COMMENT	BWB
0	05/10/2022	FINAL CDs	AMM

PROFESSIONAL STAMP

TRENT TRAVIS SNARR
REGISTERED
21726
STATE OF
VIRGINIA
PROFESSIONAL ENGINEER
05/19/22

ENGINEER

TRENT TRAVIS SNARR, P.E.
WEST VIRGINIA PROFESSIONAL ENGINEER
LICENSE #21726

SHEET TITLE

ANTENNA SPECIFICATIONS & DETAILS

SHEET NUMBER

A-3

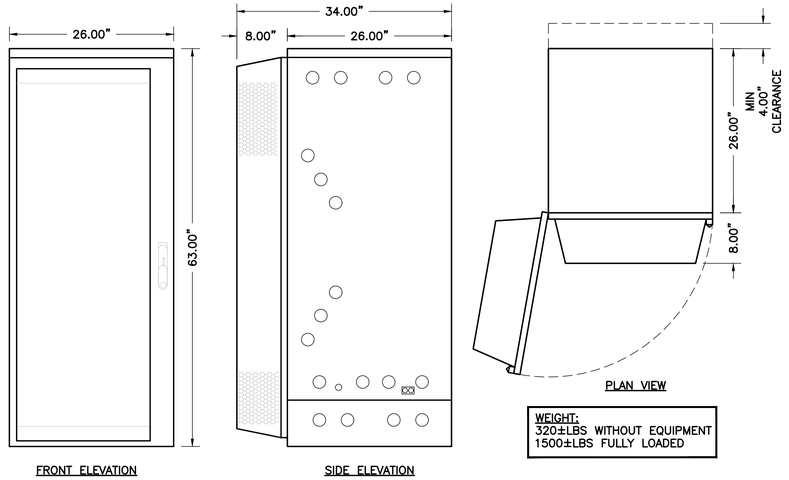

1 / A-4 6160 ENCLOSURE CABINET
NOT TO SCALE

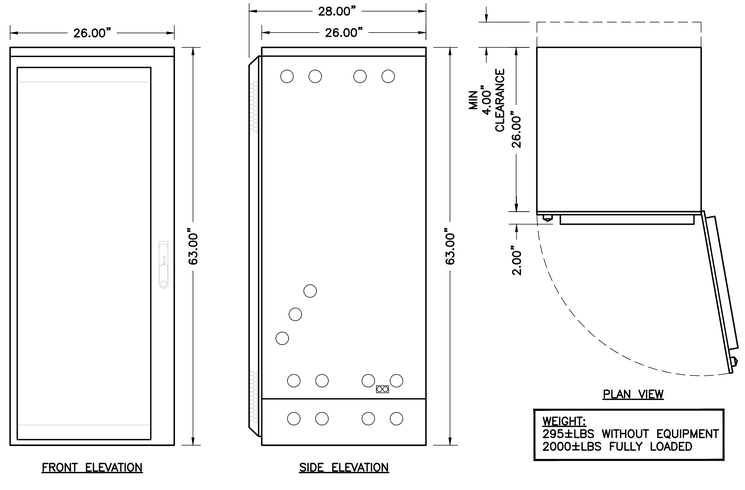

2 / A-4 B160 BATTERY CABINET
NOT TO SCALE

APPLICANT

T-Mobile

T-MOBILE NORTHEAST LLC

12050 BALTIMORE AVENUE
BELTSVILLE, MD 20705
OFFICE: (240) 264-8600
FAX: (240) 264-8610

ENGINEER

NB+C™
TOTALLY COMMITTED.

NB+C ENGINEERING SERVICES, LLC.
6095 MARSHALEE DRIVE, SUITE 300
ELKRIDGE, MD 21075
(410) 712-7092

SITE INFORMATION

7HCH307A
CHARLES TOWN LOCUST
HILL WATERTANK
325 SAWGRASS DRIVE
CHARLES TOWN, WV 25414
JEFFERSON COUNTY

DESIGN RECORD

REVISIONS

REV	DATE	DESCRIPTION	BY
1	05/19/2022	REV PER COMMENT	BWB
0	05/10/2022	FINAL CDs	AMM

PROFESSIONAL STAMP

TRENT TRAVIS SNARR
REGISTERED
21726
W. STATE OF
VIRGINIA
PROFESSIONAL ENGINEER
05/19/22

ENGINEER

TRENT TRAVIS SNARR, P.E.
WEST VIRGINIA PROFESSIONAL ENGINEER
LICENSE #21726

SHEET TITLE

EQUIPMENT SPECIFICATIONS & DETAILS

SHEET NUMBER

A-4

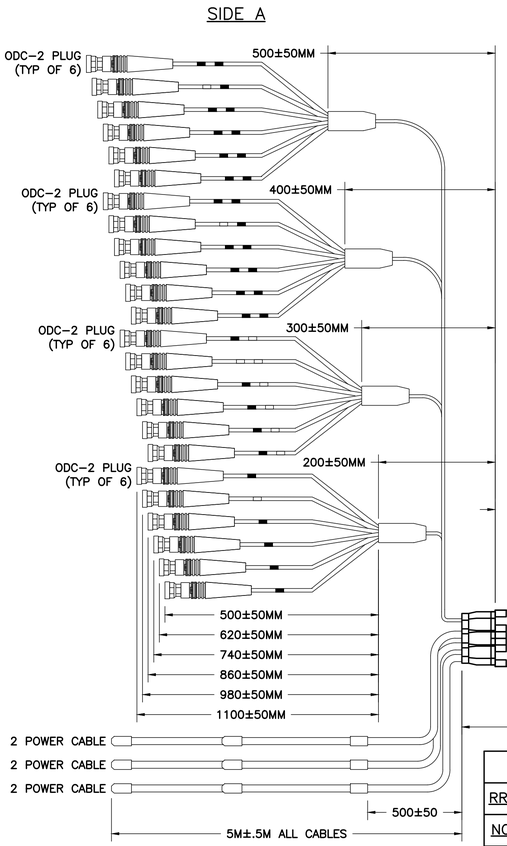

HYBRID CABLE WEIGHT		
12/C #4	2.66LB/FT	3.95KG/M

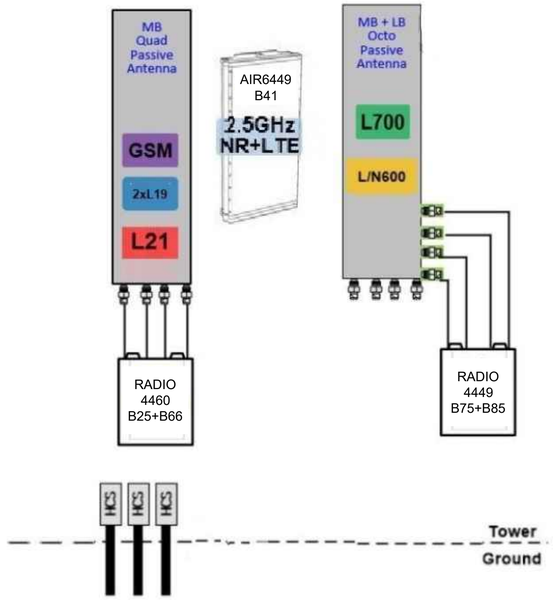

1 / A-5 4SEC-67D5A998E ANTENNA AND CABLING SCHEMATIC
NOT TO SCALE

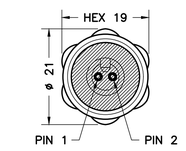

ODC–2 PLUG FRONT VIEW

TOLERANCE	ASSEMBLY LENGTH
+80	L < 5M
+2%	L ≥ 5M

POWER	
LENGTH	DIAMETER
L ≤ 60M	6MM²(10AWG)
L ≥ 60M	10MM²(8AWG)



LC DUPLEX FRONT VIEW

③ STANDARD LABEL 84002345

④ ATTENTION DO NOT TWIST PULLING TUBE — STANDARD LABEL 84087128

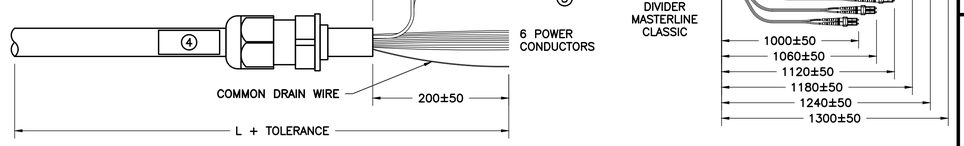

FIBER OPTIC						
RRH NO.	SIDE A ODC PLUG	SIDE A PIN	SIDE B PIN	SIDE B COLOR LCD BOOTS	SIDE B LENGTH	SIDE B RUBBER GROMMETS
1	ODC–2 RED	1	B	RED (SHORT BREAKOUT)	1000 ± 50	1
		2	A			
2	ODC–2 GREEN	1	B	GREEN	1060 ± 50	
		2	A			
3	ODC–2 BLUE	1	B	BLUE	1120 ± 50	1
		2	A			
4	ODC–2 YELLOW	1	B	YELLOW	1180 ± 50	
		2	A			
5	ODC–2 WHITE	1	B	WHITE	1240 ± 50	1
		2	A			
6	ODC–2 BLACK	1	B	BLACK	1300 ± 50	
		2	A			

POWER				
RRH NO.	REF HOOK UP	SIDE A WIRE COLOR	SIDE A CABLE DESIGNATOR	SIDE B WIRE COLOR
1	–48V	BLACK	RED	RED
	0V	GREY		BLACK
	GROUND	DRAIN		COMMON DRAIN
2	–48V	BLACK	GREEN	GREEN
	0V	GREY		WHITE
	GROUND	DRAIN		COMMON DRAIN
3	–48V	BLACK	BLUE	BLUE
	0V	GREY		ORANGE
	GROUND	DRAIN		COMMON DRAIN

POWER				
RRH NO.	REF HOOK UP	SIDE A WIRE COLOR	SIDE A CABLE DESIGNATOR	SIDE B WIRE COLOR
4	–48V	BLACK	YELLOW	RED
	0V	GREY		BLACK
	GROUND	DRAIN		COMMON DRAIN
5	–48V	BLACK	WHITE	GREEN
	0V	GREY		WHITE
	GROUND	DRAIN		COMMON DRAIN
6	–48V	BLACK	BLACK	BLUE
	0V	GREY		ORANGE
	GROUND	DRAIN		COMMON DRAIN

2 / A-5 MLE HYBRID CABLE (6 POWER/24 FIBER)
NOT TO SCALE

APPLICANT

T-Mobile

T-MOBILE NORTHEAST LLC

12050 BALTIMORE AVENUE
BELTSVILLE, MD 20705
OFFICE: (240) 264-8600
FAX: (240) 264-8610

ENGINEER

NB+C TOTALLY COMMITTED.

NB+C ENGINEERING SERVICES, LLC.
6095 MARSHALEE DRIVE, SUITE 300
ELKRIDGE, MD 21075
(410) 712-7092

SITE INFORMATION

7HCH307A
CHARLES TOWN LOCUST HILL WATERTANK
325 SAWGRASS DRIVE
CHARLES TOWN, WV 25414
JEFFERSON COUNTY

DESIGN RECORD

REVISIONS

REV	DATE	DESCRIPTION	BY
1	05/19/2022	REV PER COMMENT	BWB
0	05/10/2022	FINAL CDs	AMM

PROFESSIONAL STAMP

TRENT TRAVIS SNARR
REGISTERED
21726
STATE OF
VIRGINIA
05/19/22
PROFESSIONAL ENGINEER

ENGINEER

TRENT TRAVIS SNARR, P.E.
WEST VIRGINIA PROFESSIONAL ENGINEER
LICENSE #21726

SHEET TITLE

PLUMBING DIAGRAM & CABLING DETAIL

SHEET NUMBER

A-5

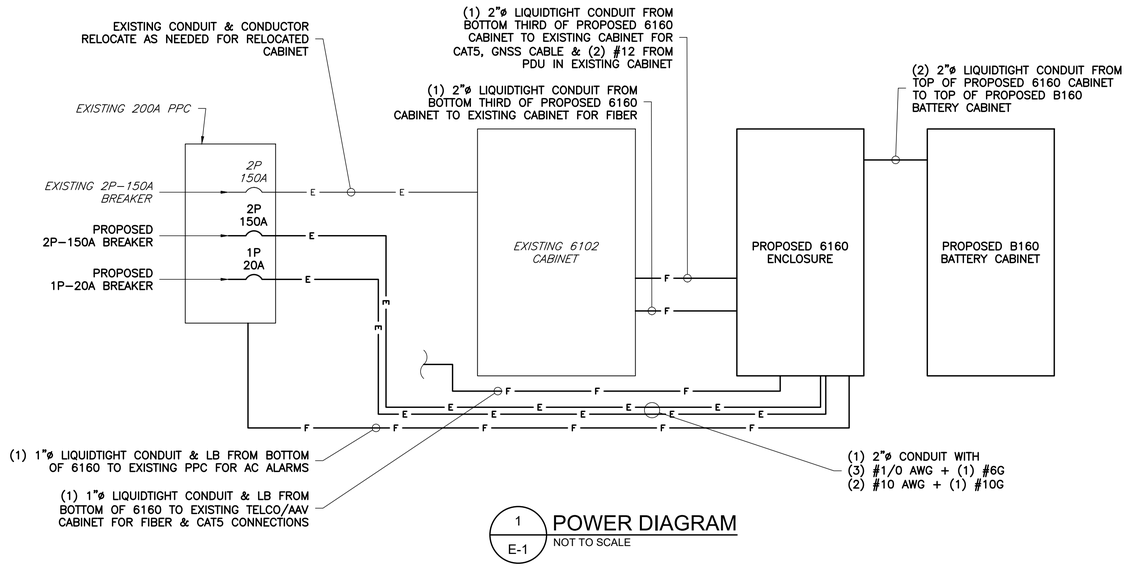

1 / E-1 POWER DIAGRAM
NOT TO SCALE

PPC PANEL

MAIN BREAKER RATING (A): 200 | SYSTEM VOLTAGE (V): 240 | PHASE: 1 WIRE: 3 BRANCH CB: 24

CKT	CIRCUIT DESCRIPTION	WATTAGE C	WATTAGE NC	POLE	BRK	LOAD PER PHASE A	LOAD PER PHASE B	BRK	POLE	WATTAGE NC	WATTAGE C	CIRCUIT DESCRIPTION	CKT
1	SURGE PROTECTOR	0	0	2	60	360		20	1	360	0	GFCI	2
3		0	0				4350			4350	0	6102 CABINET	4
5	LIGHT	0	240	1	20	4590		150	2	4350	0		6
7	BATTERY CHARGER	0	1500	1	20		5850			4350	0		8
9	GEN GFCI	0	360	1	15	4710				4350	0		10
11	***6160 CABINET**	**0**	**6125**	**2**	**150**		6125			0	0		12
13		**0**	**6125**			6125				0	0		14
15		**0**	**6125**				6125			0	0		16
17		**0**	**6125**			6125				0	0		18
19	****6160 GFCI**	**0**	**360**	**1**	**20**		360			0	0		20
21		0	0			0				0	0		22
23		0	0				0			0	0		24
						TOTAL LOADS PER PHASE							
NOTES						21910	22810						

***INSTALL (1) NEW 2P-150A BREAKER FOR PROPOSED 6160**
****INSTALL (1) NEW 1P-20A BREAKER FOR PROPOSED 6160 GFCI**

SUBTOTAL CONTINUOUS	0
SUBTOTAL NON-CONTINUOUS	44720

125% TOTAL CONTINUOUS (VA)	0
100% TOTAL NON-CONTINUOUS (VA)	44720
TOTAL AMPS	186.33
TOTAL CONNECTED LOAD (KVA)	44.72
SPARE CAPACITY (A)	13.67

2 / E-1 PANEL SCHEDULE
NOT TO SCALE

APPLICANT

T-MOBILE NORTHEAST LLC
12050 BALTIMORE AVENUE
BELTSVILLE, MD 20705
OFFICE: (240) 264-8600
FAX: (240) 264-8610

ENGINEER

NB+C ENGINEERING SERVICES, LLC.
6095 MARSHALEE DRIVE, SUITE 300
ELKRIDGE, MD 21075
(410) 712-7092

SITE INFORMATION

7HCH307A
CHARLES TOWN LOCUST HILL WATERTANK
325 SAWGRASS DRIVE
CHARLES TOWN, WV 25414
JEFFERSON COUNTY

DESIGN RECORD

REVISIONS

REV	DATE	DESCRIPTION	BY
1	05/19/2022	REV PER COMMENT	BWB
0	05/10/2022	FINAL CDs	AMM

PROFESSIONAL STAMP

TRENT TRAVIS SNARR REGISTERED 21726 STATE OF VIRGINIA PROFESSIONAL ENGINEER 05/19/22

ENGINEER

TRENT TRAVIS SNARR, P.E.
WEST VIRGINIA PROFESSIONAL ENGINEER
LICENSE #21726

SHEET TITLE

ELECTRICAL DETAILS

SHEET NUMBER

E-1

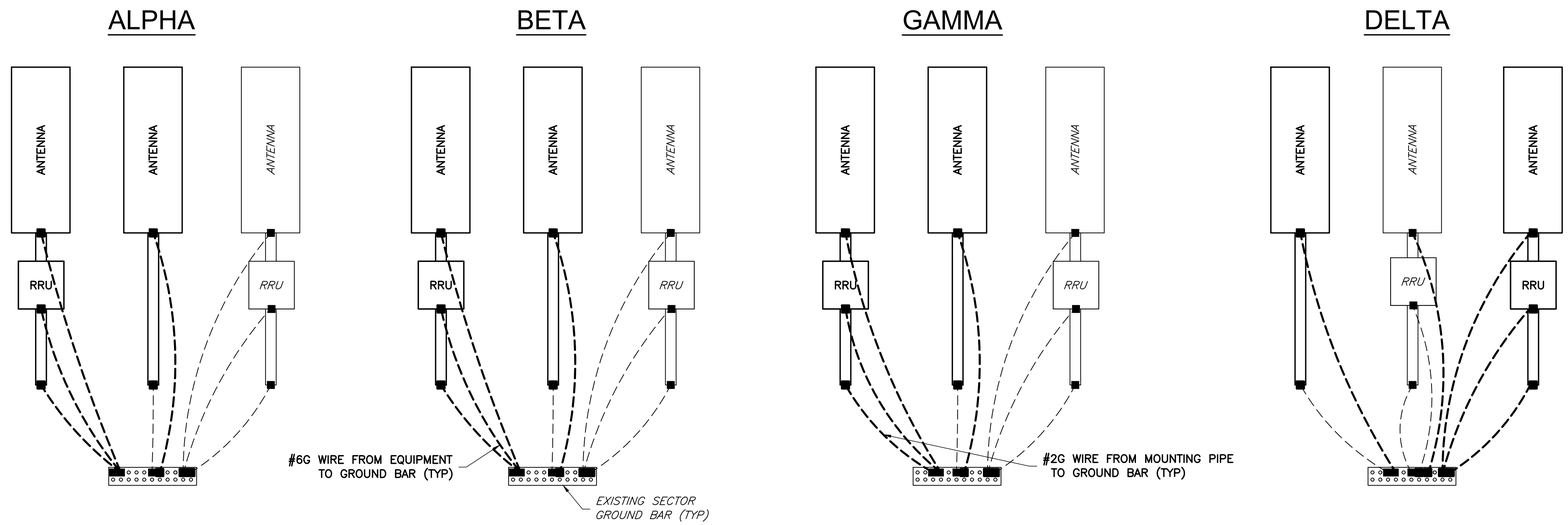

1 G-1 ANTENNA GROUNDING DETAIL
NTS

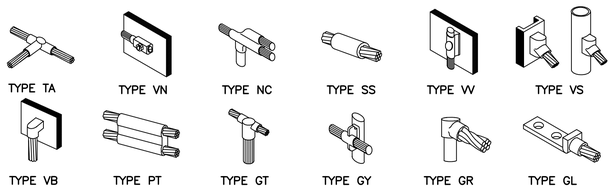

2 G-1 GROUNDING CONNECTION DETAILS
NOT TO SCALE

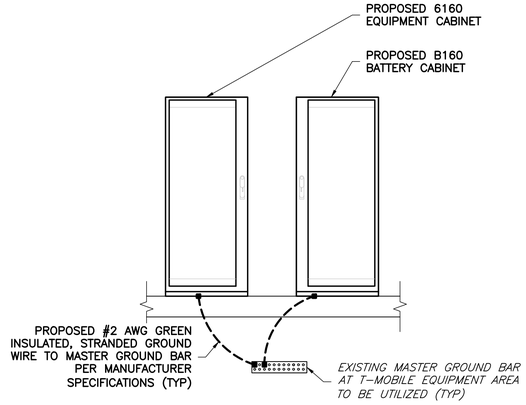

3 G-1 CABINET GROUNDING DIAGRAM
NOT TO SCALE

GROUNDING LEGEND

- ■ MECHANICAL COMPRESSION CONNECTION
- ▲ CADWELD CONNECTION
- ● EXOTHERMIC WELD CONNECTION
- PROPOSED GROUND WIRING
- EXISTING GROUND WIRING

APPLICANT

T-MOBILE NORTHEAST LLC

12050 BALTIMORE AVENUE
BELTSVILLE, MD 20705
OFFICE: (240) 264-8600
FAX: (240) 264-8610

ENGINEER

NB+C ENGINEERING SERVICES, LLC.
6095 MARSHALEE DRIVE, SUITE 300
ELKRIDGE, MD 21075
(410) 712-7092

SITE INFORMATION

7HCH307A
CHARLES TOWN LOCUST HILL WATERTANK
325 SAWGRASS DRIVE
CHARLES TOWN, WV 25414
JEFFERSON COUNTY

DESIGN RECORD

REVISIONS

REV	DATE	DESCRIPTION	BY
1	05/19/2022	REV PER COMMENT	BWB
0	05/10/2022	FINAL CDs	AMM

PROFESSIONAL STAMP

TRENT TRAVIS SNARR
REGISTERED
21726
W. STATE OF VIRGINIA
PROFESSIONAL ENGINEER
05/19/22

ENGINEER

TRENT TRAVIS SNARR, P.E.
WEST VIRGINIA PROFESSIONAL ENGINEER
LICENSE #21726

SHEET TITLE

GROUNDING DETAILS

SHEET NUMBER

G-1

STRUCTURAL NOTES

STRUCTURAL DESIGN CRITERIA:

STRUCTURAL DESIGN IS BASED ON THE 2015 VIRGINIA STATEWIDE BUILDING CODE.

LOCATION: JEFFERSON COUNTY

CONSTRUCTION MATERIAL SELF WEIGHT PER ASCE 7-10

ULTIMATE WIND SPEED:	115 MPH
OCCUPANCY CATEGORY:	II
EXPOSURE CATEGORY:	B
TOPOGRAPHIC CATEGORY:	1

1. THE LATEST EDITION OF THE FOLLOWING SPECIFICATIONS SHALL GOVERN:
   A. AISC – "ALLOWABLE STRESS DESIGN SPECIFICATION FOR STRUCTURAL STEEL BUILDINGS".
   B. AISC – "CODE OF STANDARD PRACTICE FOR STEEL BUILDINGS AND BRIDGES".
   C. AWS – "D1.1 STRUCTURAL WELDING CODE – STEEL".

2. MATERIAL, UNLESS OTHERWISE NOTED, SHALL CONFORM TO THE FOLLOWING ASTM SPECIFICATIONS

STRUCTURAL WIDE FLANGE & M SHAPES	A992 OR A572 Fy = 50KSI
OTHER STRUCTURAL SHAPES AND PLATES	A36 Fy = 36 KSI
STRUCTURAL TUBING	A500, GRADE B Fy = 46 KSI
HIGH STRENGTH BOLTS	A325
THREADED RODS	A354, GRADE BC
ANCHOR BOLTS	A325 OR A354 BC
PIPE (HANDRAIL)	SCH 40 PIPE

3. ALL WELDING SHALL BE IN ACCORDANCE WITH AWS D1.1 USING E70XX ELECTRODES. UNLESS OTHERWISE NOTED PROVIDE CONTINUOUS MINIMUM SIZED FILLET WELDS PER AISC REQUIREMENTS.

4. HOLES IN STEEL SHALL BE DRILLED OR PUNCHED. ALL SLOTTED HOLES SHALL BE PROVIDED WITH SMOOTH EDGES. BURNING OF HOLES AND TORCH CUTTING AT THE SITE IS NOT PERMITTED. ALL HOLES IN BEARING PLATES SHALL BE DRILLED.

5. ALL STEEL TO BE HOT-DIPPED GALVANIZED AFTER FABRICATION PER ASTM A123.

6. EPOXY ANCHORS TO BE INSTALLED PER MANUFACTURER'S SPECIFICATIONS.

7. ALL BOLTS SHALL BE TIGHTENED USING TURN-OF-THE-NUT METHOD PER AISC SPECIFICATIONS USING STANDARD HOLES.

8. CONTRACTOR TO FIELD VERIFY ALL DIMENSIONS AND FIT PRIOR TO FABRICATION.

10. THE FABRICATOR SHALL FURNISH CHECKED SHOP AND ERECTION DRAWINGS TO THE ENGINEER, AND OBTAIN APPROVAL PRIOR TO FABRICATING ANY STRUCTURAL STEEL. SHOP DRAWINGS SHALL CONFORM TO AISC "DETAILING FOR STEEL CONSTRUCTION".

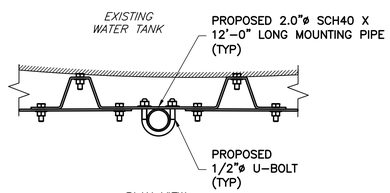

PLAN VIEW

NOTE:
PLEASE SEE STRUCTURAL ANALYSIS FOR FURTHER DETAIL & SPECIFICATION FOR MOUNTING ONTO THE EXISTING WATER TANK.

1 / ST-1 WATER TANK PIPE MOUNTING DETAIL
NTS

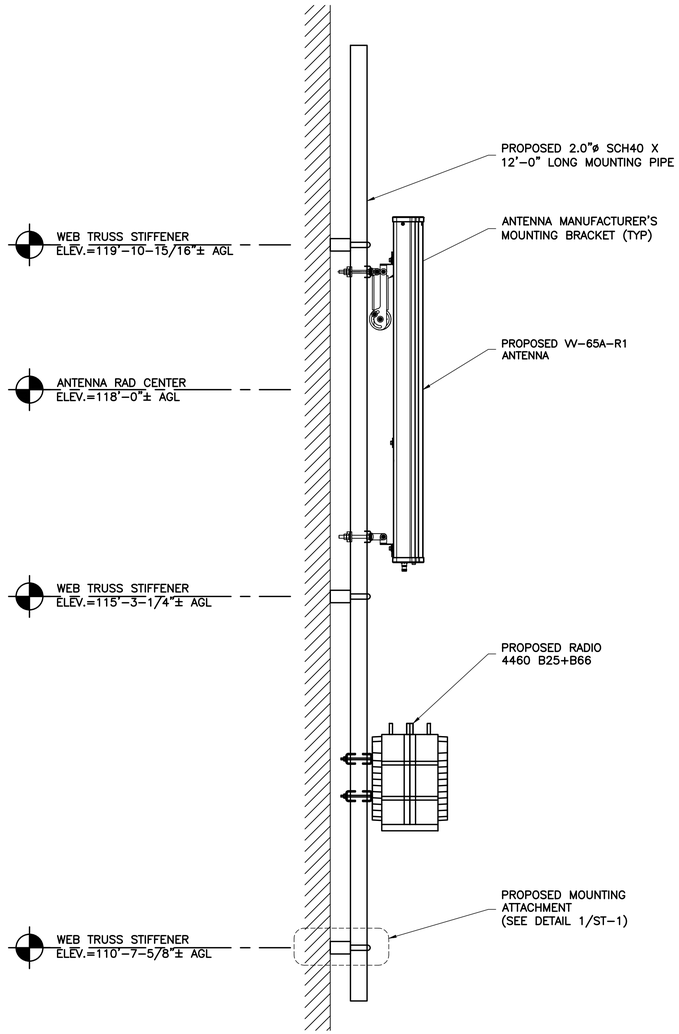

2 / ST-1 COMMSCOPE ANTENNA MOUNTING DETAIL
NTS

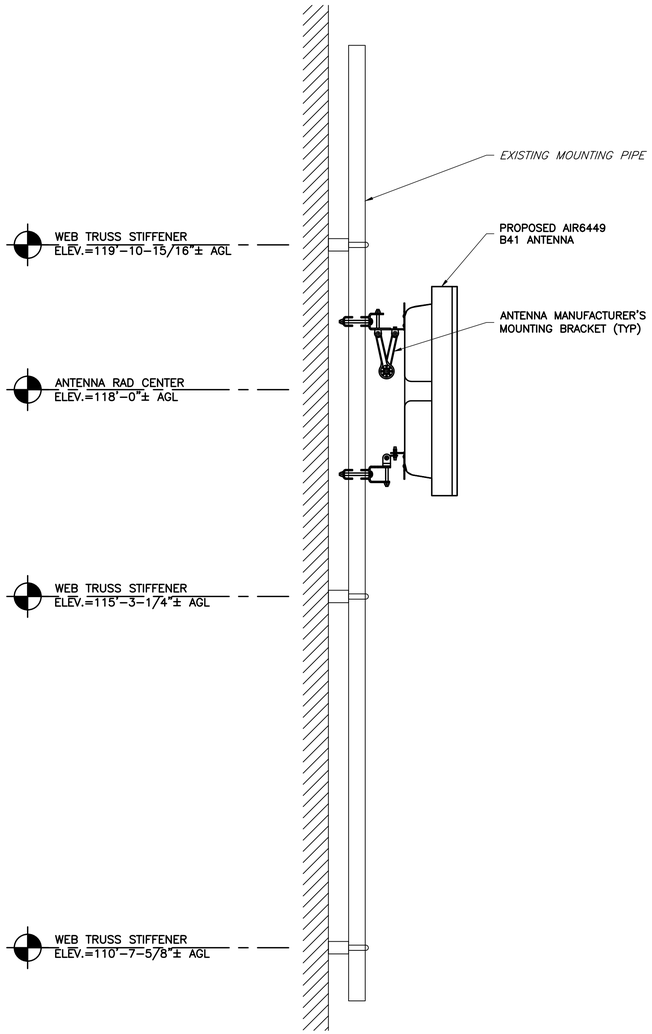

3 / ST-1 ERICSSON ANTENNA MOUNTING DETAIL
NTS

APPLICANT

T-MOBILE NORTHEAST LLC

12050 BALTIMORE AVENUE
BELTSVILLE, MD 20705
OFFICE: (240) 264-8600
FAX: (240) 264-8610

ENGINEER

NB+C ENGINEERING SERVICES, LLC.
6095 MARSHALEE DRIVE, SUITE 300
ELKRIDGE, MD 21075
(410) 712-7092

SITE INFORMATION

7HCH307A
CHARLES TOWN LOCUST HILL WATERTANK
325 SAWGRASS DRIVE
CHARLES TOWN, WV 25414
JEFFERSON COUNTY

DESIGN RECORD

REVISIONS

REV	DATE	DESCRIPTION	BY
1	05/19/2022	REV PER COMMENT	BWB
0	05/10/2022	FINAL CDs	AMM

PROFESSIONAL STAMP

TRENT TRAVIS SNARR REGISTERED 21726 STATE OF WEST VIRGINIA PROFESSIONAL ENGINEER 05/19/22

ENGINEER

TRENT TRAVIS SNARR, P.E.
WEST VIRGINIA PROFESSIONAL ENGINEER
LICENSE #21726

SHEET TITLE

ANTENNA MOUNTING DETAILS

SHEET NUMBER

ST-1

WATER TREATMENT SYSTEM FACILITY PLAN UPDATE

FOR

CHARLES TOWN UTILITY BOARD

CITY OF CHARLES TOWN,
JEFFERSON COUNTY, WV

APRIL 2022

DRAFT

GD&F
GWIN
DOBSON &
FOREMAN
ENGINEERS

WATER TREATMENT SYSTEM FACILITY PLAN UPDATE
CHARLES TOWN UTILITY BOARD
APRIL 2022

TABLE OF CONTENTS

Executive Summary iii

Section 1: WATER TREATMENT SYSTEM FACILITY PLAN 1

A. Plan Objectives 1
B. Existing Systems Overview 2
C. Previous Reports & Documentation Reviewed 3

Section 2: FUTURE POPULATION & WATER DEMANDS 4

A. General 4
B. Service Area 4
C. Population 4
D. Water Production 6
E. Unaccounted-for Water 8
F. Future Water Demand 9
G. Fire Flow Requirements 12

Section 3: EXISTING WATER SYSTEM FACILITIES 13

A. Raw Water Sources 13

Section 4: WATER TREATMENT PLANT IMPROVEMENTS 20

A. General 20
B. Capacity Assessment 20
C. Treatment & Regulatory Goals 20
D. Discussion of Treatment Facility Needs 23
E. Recommendations 29

Section 5: TREATMENT SYSTEM ALTERNATIVES EVALUATION 34

A. Pretreatment 34
B. Filtration 35

Section 6: COST ESTIMATES AND SCHEDULE 44

A. Cost Estimate Summary 44
B. Proposed Project Schedule 45

DRAFT

TABLE OF CONTENTS (CONTINUED)...

LIST OF TABLES

Table 1: City of Charles Town Projected Peak Flow by Design Year 10
Table 2: Projected EDUs & Peak Demand in CTWSA 11
Table 3: Chemical Feed Summary 18
Table 4: Charles Town Potable Water Quality Goals 22
Table 5: Recommended Source Development and Intake Projects Construction Cost Estimate 44
Table 6: Recommended WTP Projects Construction Cost Estimate 44
Table 7: Recommended Total Project Cost Estimate 45
Table 8: Recommended Project Schedule 46

LIST OF FIGURES

Figure 1: Service Area 5
Figure 2: CTWTP Water Production (1/1/2016 - 9/20/2021) 7
Figure 3: 365 Day Running Average Water Production 8
Figure 4: Charles Town WTP Peak Day Demand Projections 12
Figure 5: Treatment Process Schematic 15
Figure 6: Existing Site Plan of Charles Town WTP (from RK&K Engineers, 2016) 16
Figure 7: Proposed Site Plan Layout for New WTP 33

DRAFT

APPENDICES

Appendix A: Intake Screen Concrete Debris Deflector Drawing
Appendix B: Typical New Flocculation and Sedimentation Drawings
Appendix C: Pall Corporation Budgetary Membrane System Proposal and Preliminary Drawings
Appendix D: Calgon Corporation GAC Datasheets and Preliminary Drawings

Executive Summary

The City of Charles Town, WV is facing development pressures as a bedroom community to Washington, D.C. As such, based on the recent and projected future rates of development, the existing Charles Town Water Treatment Plant (CTWTP) will not be capable of meeting the potable water demands in the service area, potentially in 2036.

The current capacity of the treatment facility is 2.8 million gallons a day (MGD). The plant currently operates about 17 hours a day to meet an average daily demand of approximately 1.7 MGD. Based on the potable water demand projections, the maximum daily production requirement of the CTWTP will increase from 2.41 MGD today, to 2.68 MGD in 2032, 2.95 MGD in 2042 and 3.23 MGD in 2052.

To address these increased production and ongoing plant issues, an evaluation of the existing drinking water treatment facilities was conducted. Based on the evaluation of the existing facilities, Gwin, Dobson & Foreman, Inc., has developed a set of recommendations to address the current plant condition, along with regulatory and growth needs of the City.

It should be noted that from a regulatory perspective, the facility has had problems meeting all the provisions of the EPA's Stage 2 Disinfection Byproduct (DBP) Rule. While currently in compliance with the DBP Rule, the City has to use liquid ammonium sulfate for chloramination.

The following is a summary of the recommendations provided in this report.

Capacity Increase Recommendations

DRAFT

- Expansion of the existing plant to a 3.8 MGD, water treatment facility to consist of an upgraded raw water intake system, new flocculation and sedimentation basins, membrane and granular activated carbon (GAC) filtration and sodium hypochlorite disinfection. The new treatment plant will be designed with room for modular expansion, it will consist of full unit redundancy and will also include provisions for UV disinfection.

Supplemental Sources

- Develop supplemental groundwater wells or spring sources and convey them to the WTP such to obtain approximately 500 GPM of raw water to the treatment facility.

Raw Water Intake System

- Install a separate parallel 20" intake pipe and new stainless steel air line leading from the existing wet well along with a second T-screen.
- Install a concrete diversion structure with secondary screen surrounding the T-screens.
- Provide a new automatic airburst screen cleaning system for each screen.
- Add a new level transmitter to wet well.
- Add a new telemetry system for communication to water treatment plant.
- Replace the two (2) intake pump motors.
- Replace existing 20" intake supply line knife gate valve.

New Treatment Facility Construction

Mixing, Flocculation and Sedimentation Basins

- A new in-line static mixer, flow meter and turbidimeter would be installed on the combined raw water line inside the new treatment facility.
- Install a new dual stage flocculation tank with 30 minutes of contact time per basin and a new sedimentation basin with four (4) hours of detention time. Provide new flocculators, sludge collectors, slide gates, weirs and troughs and level sensor. Install new concrete sludge and meter vault.
- Continue utilizing PACl for coagulation.
- Modify the existing flocculation tanks and sedimentation basins, taking into account their current volumes, to provide the appropriate detention times listed above.

Membrane Filtration

- Construct new, low-pressure membrane filtration system for particulate removal with a capacity of 3.8 MGD inside a new concrete and masonry building. System to consist of feed tanks and pumps, prestrainers, membrane module racks, backwash tanks and pumps, compressed air system, automated chemical clean-in-place system with neutralization and water softening system.
- Demolish the existing media filters.

GAC Filtration

DRAFT

- Construct new, low-pressure granular activated carbon (GAC) filtration system with a capacity of 2.8-3.0 MGD inside a new concrete and masonry building for TOC removal. System to consist of six (6) 40,000 pound GAC vessels with consideration to add two (2) future tanks. Provide automated valves, flow meters and process piping on each set of vessels.
- Discontinue the use of chloramination.

UV Disinfection

- Provide two (2) fully redundant UV systems each rated for 3.8 MGD with associated piping and controls for use as a secondary barrier to contaminants.
- This item could be made a Bid Alternate.

Chemical Feed

- Provide a separate room in the new plant to house all new liquid chemical feed systems. Provide a new bulk coagulant and sodium hypochlorite chemical feed system. Provide new chemical feed stations for caustic soda, acid, fluoride, corrosion inhibitor and a spare with adequate redundancy, valves and containment.

Disinfection

- To increase baffling and reduce short-circuiting, eliminate the submersible mixer and install a baffle wall inside the existing 1.0 MG circular clearwell.
- Discontinue the use of chlorine gas and utilize liquid sodium hypochlorite.

Solids Handling

- Construct a new pump station that conveys all treatment plant process wastewater to the existing CTUB sewer system.
- Discontinue all process wastewater recycling.

Piloting

- Consider conducting a minimum three (3) month pilot study featuring testing the effectiveness of a new membrane and GAC system.

Estimated Project Costs

- The total estimated construction costs for all recommended raw water source development, intake and water treatment facility upgrades is about $20,000,000, while the total project cost is estimated at $24,880,000. Note that these costs do not include costs for distribution system upgrades or improvements.

DRAFT

Section 1
WATER TREATMENT SYSTEM FACILITY PLAN

The City of Charles Town, WV, is currently undertaking several major initiatives associated with the development of supplemental raw water sources, improving water treatment reliability/quality, expanding treatment capacity, and enhancing transmission and distribution efficiency to serve an increasing population and service area. The purpose of this report is to review the existing water sources, production and treatment systems and plan for subsequent expansion and improvements to provide high quality water within the service area through 2052.

This Water Treatment System Facility Plan will provide the "roadmap" for improving the reliability and quality of the City's water treatment system. However, this plan, along with the current and projected growth figures and plant production rates, should be re-evaluated every five (5) years.

A. Plan Objectives

The City has specific needs that are to be addressed by this Water Treatment System Facility Plan. These include, but are not limited to:

- Provision for redundant sources
- Provision for redundancy and reliability at river intake
- Chemical feed system safety
- Adequate detention times
- Disinfection Byproduct compliance
- Sludge handling/disposal alternatives
- Haulting of process wastewater recycling
- Conventional filter upgrades and/or replacement

DRAFT

1. Water Source

The City uses the Shenandoah River as an exclusive source of drinking water for its water treatment facility. The Shenandoah River is part of the Chesapeake Bay Watershed and has a drainage area of over 3,000 square miles. The large drainage area is comprised of various land uses, including agricultural, residential, municipal, industrial and undeveloped.

The Shenandoah River has adequate flow to consistently meet the water demands of the City of Charles Town. One benefit of utilizing the Shenandoah River as a primary water source is that, currently, the amount of water that can be withdrawn from the river is not regulated, providing the City with water supply for years to come.

In terms of water quality, typical of large river sources, turbidity in the River is moderate averaging approximately 11 Nephelometric Turbidity Units (NTU), but it can vary widely, with spikes well over 300 NTU. Organic compounds, such as algae and dissolved organics, become problematic during the warm summer months. The raw water contains typical levels of inorganic constituents, with a hardness ranging from 100 to 200 mg/L as calcium carbonate. Dissolved iron (Fe) and manganese (Mn) are typically below the EPA secondary MCL drinking water limits.

2. Finished Water Quality

A review of the current design and operation of the City's Water Treatment Plant (WTP) was conducted to determine what operational modifications and upgrades will be required to continue compliance with existing, as well as prepare for future, drinking water regulations. The treatment facility has experienced difficulty in the past meeting the DBP requirements, and modifications to the treatment process (notably ammonia addition) have been made to address these issues.

The average filtered water turbidity (0.03 NTU), which is currently meeting the regulatory requirement of 0.30 NTU, is higher than desired. The primary issues associated with this high turbidity is attributed to the current plant process wastewater recycle process along with outdated filter functionality.

3. Treatment Capacity

The area surrounding Charles Town is experiencing substantial growth pressure, which is expected to require additional drinking water over the next several years. As such, it is necessary for the City to undertake a treatment plant expansion project to provide additional treatment capacity to serve the new customers. The growth projection data prepared as part of the 2021 Wastewater Strategic Plan, modified to reflect the water supply customers, will be used as the basis to prepare estimates for future water demands over the 30-year planning period.

DRAFT

Based on the results of this evaluation and the associated water treatment evaluation, a recommended plant expansion program to meet the treatment and capacity requirements for the planning period has been developed herein.

B. Existing Systems Overview

1. Raw Water Intake & Treatment Plant

The City of Charles Town raw water intake is located on the Shenandoah River, just upstream of the bridge carrying Route 9 over the river. A pump station located on the bank of the river is used to convey raw water to the City's treatment plant on Route 9 via approximately 7,400 linear feet of 16-inch diameter transmission main. The WTP has a nominal capacity of 2.8 MGD and has been operational since 1989. Coagulation and flocculation are followed by sedimentation and gravity filtration with gaseous chlorine and ammonia disinfection. Fluoridation and corrosion inhibitor chemicals are currently applied to the finished water.

The WTP operates approximately 17 hours per day to meet the existing demands. From the plant clearwell, the finished water is pumped into the City's distribution system.

2. Customers

The City's service area includes Charles Town, the City of Ranson, and some unincorporated portions of Jefferson County, WV. The systems serve approximately 6,387 customer accounts, including residential, commercial and industrial customers, with residential customers accounting for approximately 5,765 accounts. The corresponding estimated service population is about 15,000.

C. Previous Reports & Documentation Reviewed

The City of Charles Town prepared previous reports that provide additional background and context to this Water System Facility Plan. These reports, studies, or other documentation were used as references for this report and are listed below.

1. **Charles Town Water System Sanitary Survey, West Virginia Department of Health & Human Resources, OEHS, December 18, 2015 and January 15, 2019.**

2. **Water System Facility Plan, City of Charles Town, West Virginia, Black & Veatch Corp., February 2008.**

3. **Source Water Protection Plan, Charles Town Utility Board, Jefferson County, West Virginia, Terradon Corporation, June 2019.**

DRAFT

4. **Sewer Strategic Plan, Charles Town Utility Board, Jefferson County, West Virginia, 2021.**

Section 2
FUTURE POPULATION & WATER DEMANDS

A. General

The City of Charles Town has experienced an acceleration in the growth rate that had previously been relatively modest. Based on projections from the development community, the City expects to see similar accelerated growth rates due to a series of development drivers that are adding a distinctive suburban element to the service area. Planned and projected residential developments have been proposed to provide housing for an expanding suburban Washington D.C. area. This expansion of the Washington D.C. suburbs will lead to an increase in population in Charles Town and corresponding increased demand for water services.

These development pressures result in an anticipated population growth that is projected to result in water demands that could exceed the existing WTP capacity of 2.8 MGD in 2036.

B. Service Area

The Charles Town Water Company, a private water company provider, had served the community starting in the early 1900s. The water system stayed in private ownership until the City purchased the system and took over operation and maintenance responsibility in 1969. The original Charles Town water service area was created in 1989 and included 11.25 square miles in Jefferson County surrounding the Cities of Charles Town and Ranson. In March of 2000, the CTWSA was expanded by the City of Charles Town Utility Board (CTUB) to include over 15 square miles. The service area now includes the Cities of Charles Town and Ranson and other open areas available for development. The current service area is shown in Figure 1.

DRAFT

C. Population

1. Historical Population

Between 1980 and 2000, the population of Charles Town remained relatively constant, increasing only 1.8 percent during that period. In fact, the 2000 census survey recorded a population of 2,907, which was a slight decrease from the 1990 census. The 2000 census also reported a population of Ranson of 2,951. Similar to Charles Town, the Ranson population has been relatively unchanged between 1980 and 2000.

The 2010 census reported a population of 5,259 for Charles Town and 4,440 for Ranson. The current 2021 census reported population of Charles Town is about 6,000 and 5,433 for Ranson. Note that the population of Charles Town has more than doubled since 2000 and the growth rate since 2010 is 14%.

The area continues to see a surge in population with new developments being constructed. The new developments have altered the landscape and have spurred additional supporting commercial development.

Figure 1: Service Area

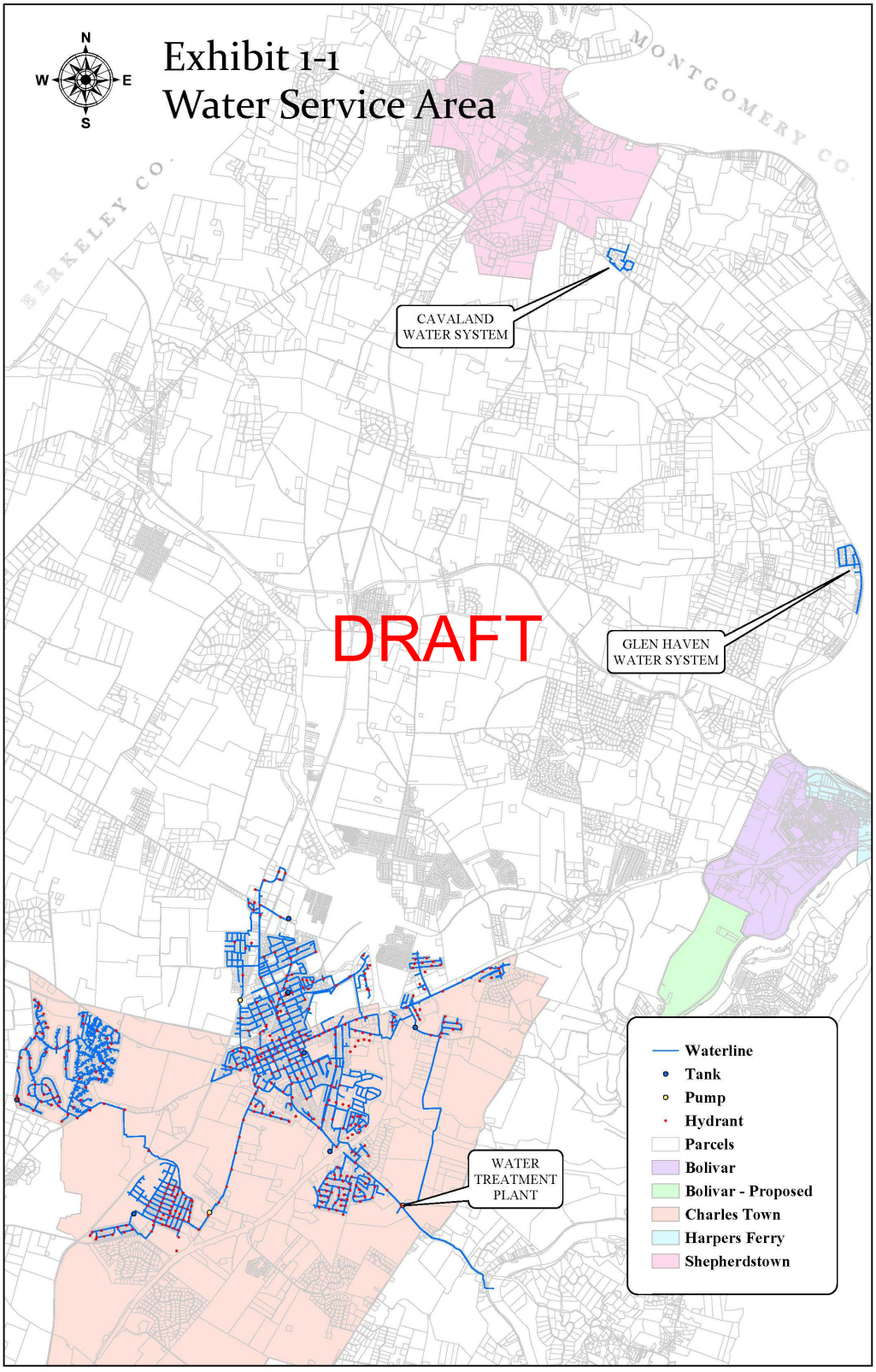

2. Future Population & Distribution

Growth between 1980 and 2000 for Charles Town was minimal; however, the population doubled from 2000 to 2020. From April 1, 2010, to April 1, 2020, the population of Jefferson County increased 7.3 percent, a net change of 4,203. Much of this population increase took place in Charles Town and Ranson. Based on the most recent estimates, the population of Charles Town and Ranson increased 14% and 18%, respectively, between 2010 and 2020.

These increases in population will continue to be driven by large residential and commercial development. During the next 30 years, further developments are planned for Charles Town and Ranson. The pattern, rate of growth and the resulting impact to water demand will be detailed later in this section of this report.

D. Water Production

Over the past seven (7) years, the average daily amount of water produced by the CTWTP has been fairly steady. While the population has increased, significant infrastructure upgrades such as main and meter replacements have reduced the lost water. This reduction in lost water has made up the difference in the population increase.

Refer to Figure 2 which shows that the average daily production has been 1.7 MGD. The current plant capacity is 2.8 MGD.

DRAFT

This average water production trend can be seen in Figure 2 which shows the daily water production for approximately the last six (6) years. Figure 3 displays a 365-day running average water production data, which shows a slight water production increase during the summer months. The summer flow rate increase is typical due to filling of swimming pools, washing of vehicles, watering of plants, etc.

Figure 2: CTWTP Water Production (1/1/2016 - 9/20/2021)

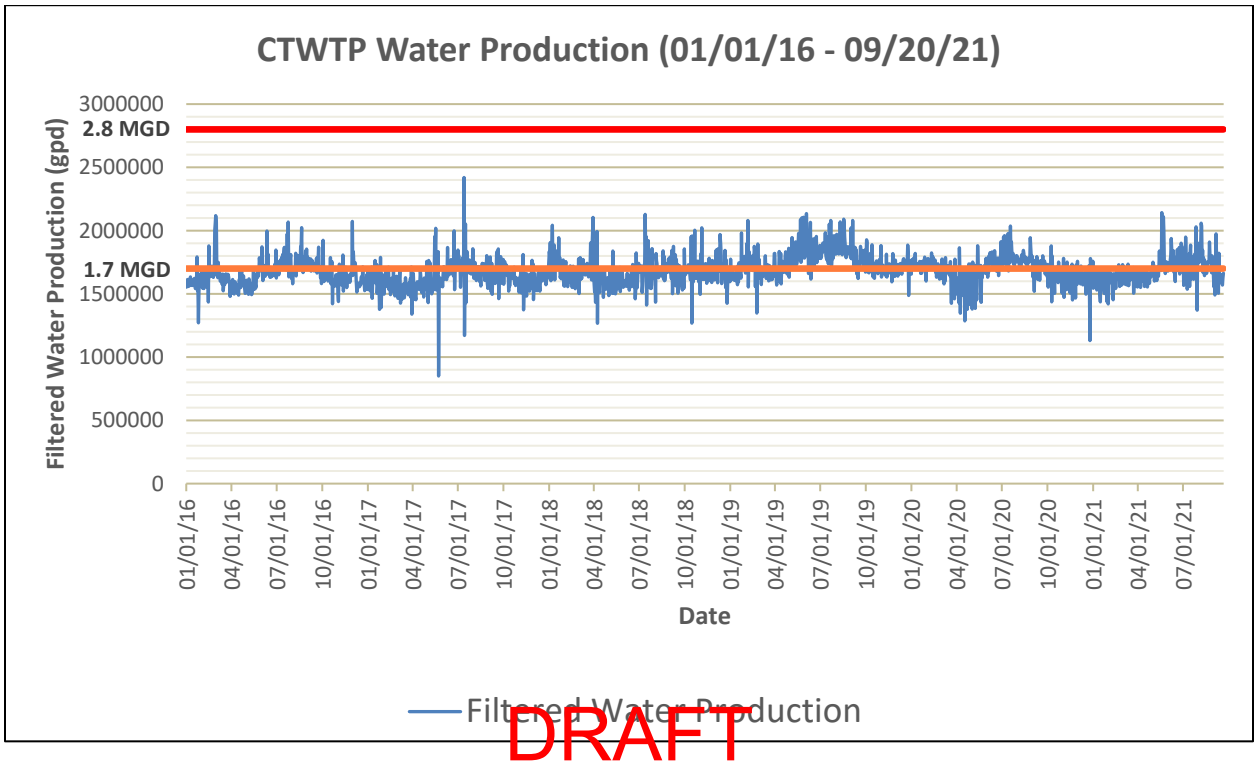

DRAFT

As the population of the Charles Town service area increases, obviously, so will the demand for drinking water. Based on these recent growth rates, in 2036, the peak water demand for the service area will exceed the capacity of the WTP.

Figure 3: 365 Day Running Average Water Production

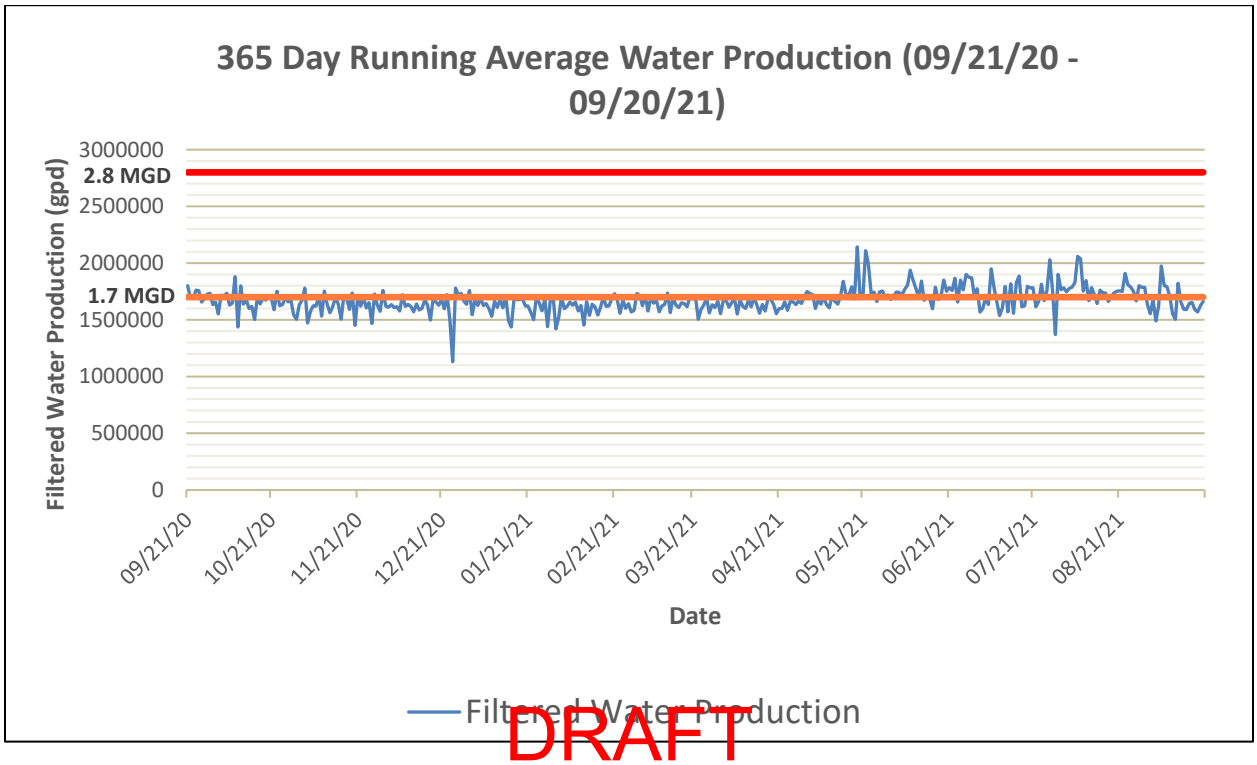

DRAFT

E. Unaccounted-for Water

Unaccounted-for water has been a major issue for the City's water system over many years. The City made several capital improvements to the water distribution system in an attempt to address portions of the water loss. From 1994 to 1999, the City replaced virtually all the water meters and repaired numerous leaks within the system. The City has replaced thousands of feet of main and is currently in the middle of another system-wide meter replacement program.

However, a large unaccounted-for water component (approximately 27%) still exists within the distribution system. The City is currently undertaking additional initiatives associated with improving current water operations and preparing for future growth in the service area to help reduce unaccounted-for water. The City has developed a plan for subsequent implementation that will reduce water loss within the distribution system, increase the efficiency of the water production versus billing capture process and generally improve overall water operations. The City has recently improved upon operation and maintenance of the distribution system. The Public Service Commission (PSC) and WV BPH recommend water loss be no greater than 15%.

As the City is able to reduce its lost water, they gain treatment capacity within the WTP to help offset the growing demands. The City has performed numerous audits over the years and have thus successfully lowered the lost water.

F. Future Water Demand

Over the next 30 years, it is anticipated that the Charles Town service area will see a steady increase in population. The primary centers of this growth will be located throughout the service area, in specific development areas.

In order to evaluate the potential growth, the Cities of Charles Town and Ranson have surveyed the developers who are planning to construct in the service area to determine what developments are planned, their size, and the developer's expected build-out rates.

1. Growth Scenarios

Since the rate of growth is variable and dependent upon numerous factors outside the control of the City, notably the state of the economy and the regional housing market, three (3) growth scenarios have been constructed for analysis:

Aggressive Growth - This scenario assumes that the growth will occur at the rates predicted by the developers, which is believed by the Charles Town Utility Board to overstate the growth rate.

Conservative Growth - This scenario assumes that the growth will occur at 50% of the rates proposed by the developers. This scenario is based on an assumption that the developers are optimistically projecting build-out rates and that the rate of growth will be substantially slower than that proposed in the Aggressive Growth scenario.

DRAFT

Average Growth - This scenario is the average of the Aggressive and Conservative growth scenarios.

Based on a review of the growth projection options, the City elected to utilize the Conservative projections for this study. It should be noted that, since there is a significant range of potential growth rates, the population/demand projections presented herein should be reviewed every three to five years, and updated accordingly if necessary.

2. Selected Growth Projections

Table 1 quantifies the selected population and flow projections for specific proposed development projects by year, showing the number of projected new EDUs as well as the total estimated peak flow demand associated with the developments. For planning purposes, demands of 150 gpd/EDU were used to calculate the potential future peak demand impact of the identified developments.

Table 1 summarizes projections through 2052, at which time, the increase in population (over 8,850 EDU's) is expected to increase the total peak daily demand for water by approximately 0.83 MGD over the next 30 years.

Table 1 lists the incremental and cumulative increase in water demand based for several design years. By the design year 2052, the cumulative peak daily water demand in the service area is expected to be over 3.23 MGD.

Table 1: City of Charles Town Projected Peak Flow by Design Year

Design Year	Design Flow	
	Increment (MGD)	Cumulative (MGD)
Base Year-2022		*2,400,000
2027	120,000	2,520,000
2032	155,400	2,675,400
2042	272,700	2,948,100
2052	283,500	3,231,600

*This value is the peak daily flow taken from Figure 2.

Figure 4 shows the increase in demand over the entire projection time based on growth estimates. The conservative growth has been used to determine when Charles Town will be required to increase capacity and what production level should be obtained to supply future growth.

DRAFT

Table 2: Projected EDUs & Peak Demand in CTWSA

Table 1.2 -CTUB Sewer Strategic Plan 2021-2024 Development Forecast																											
Development	Total Design EDUs	Total Built as of 2021	20 year forecast to be built	Total Flow	Beyond 20 year forecast	Year 1 2021	Year 2 2022	Year 3 2023	Year 4 2024	Year 5 2025	Year 6 2026	Year 7 2027	Year 8 2028	Year 9 2029	Year 10 2030	Year 11 2031	Year 12 2032	Year 13 2033	Year 14 2034	Year 15 2035	Year 16 2036	Year 17 2037	Year 18 2038	Year 19 2039	Year 20 2040	Years 11-20 2031-2040	TOTAL @ Year 20	TOTAL REMAINING
American Heritage (Huntwell)	500	0	500	75,000	200	0	0	0	20	20	20	20	20	20	20	20	20	20	20	20	20	20	0	0	160	300	200
Charles Town Infill	250	0	250	37,500	150	5	5	5	5	5	5	5	5	5	5	5	5	5	5	5	5	5	5	5	50	100	150
Fritts Property	370	0	370	55,500	50	0	0	0	0	20	20	20	20	20	20	20	20	20	20	20	20	20	20	20	200	320	50
Huntfield	3,200	421	2,779	480,000	2,459	0	0	0	0	20	20	20	20	20	20	20	20	20	20	20	20	20	20	20	200	320	2459
Jefferson Heights North	262	0	262	39,300	122	0	0	20	20	15	15	15	15	15	15	10	0	0	0	0	0	0	0	0	0	10	140	0
Tate Manor	80	0	80	12,000	0	20	20	20	20	0	0	0	0	0	0	0	0	0	0	0	0	0	0	0	0	0	80	0
Langlet	1,000	0	1,000	150,000	800	0	0	0	0	0	0	0	0	0	0	20	20	20	20	20	20	20	20	20	200	200	800
Magnolia Springs	300	0	300	45,000	0	20	20	20	20	20	20	20	20	20	20	20	20	20	20	20	0	0	0	0	0	100	300	0
Norborne Glebe	1,050	246	804	157,500	484	0	0	0	20	20	20	20	20	20	20	20	20	20	20	20	20	20	20	0	180	320	484
Old Town Ranson - Infill	250	0	250	37,500	150	5	5	5	5	5	5	5	5	5	5	5	5	5	5	5	5	5	5	5	50	100	150
Prospect Place	170	0	170	25,500	0	0	0	0	0	9	9	25	25	25	25	25	27	0	0	0	0	0	0	0	0	52	170	0
Stolipher	324	0	324	48,600	124	0	0	0	0	0	0	0	0	0	0	20	20	20	20	20	20	20	20	20	20	200	200	124
Washington Landing	274	0	274	41,100	0	0	0	0	50	50	50	50	50	24	0	0	0	0	0	0	0	0	0	0	0	0	274	0
Winchester Cold Storage	675	0	675	101,250	125	0	0	0	0	0	0	0	0	0	50	50	50	50	50	50	50	50	50	50	500	550	125
Windmill Crossing	150	146	4	22,500	0	1	1	1	1	0	0	0	0	0	0	0	0	0	0	0	0	0	0	0	0	4	0
Total Projected Development	**8,855**	**813**	**8,042**	**1,328,250**	**4,664**	**51**	**51**	**71**	**161**	**184**	**184**	**200**	**200**	**174**	**200**	**235**	**227**	**200**	**200**	**200**	**180**	**180**	**180**	**160**	**140**	**1,902**	**3,378**	**4,542**

DRAFT

Figure 4: Charles Town WTP Peak Day Demand Projections

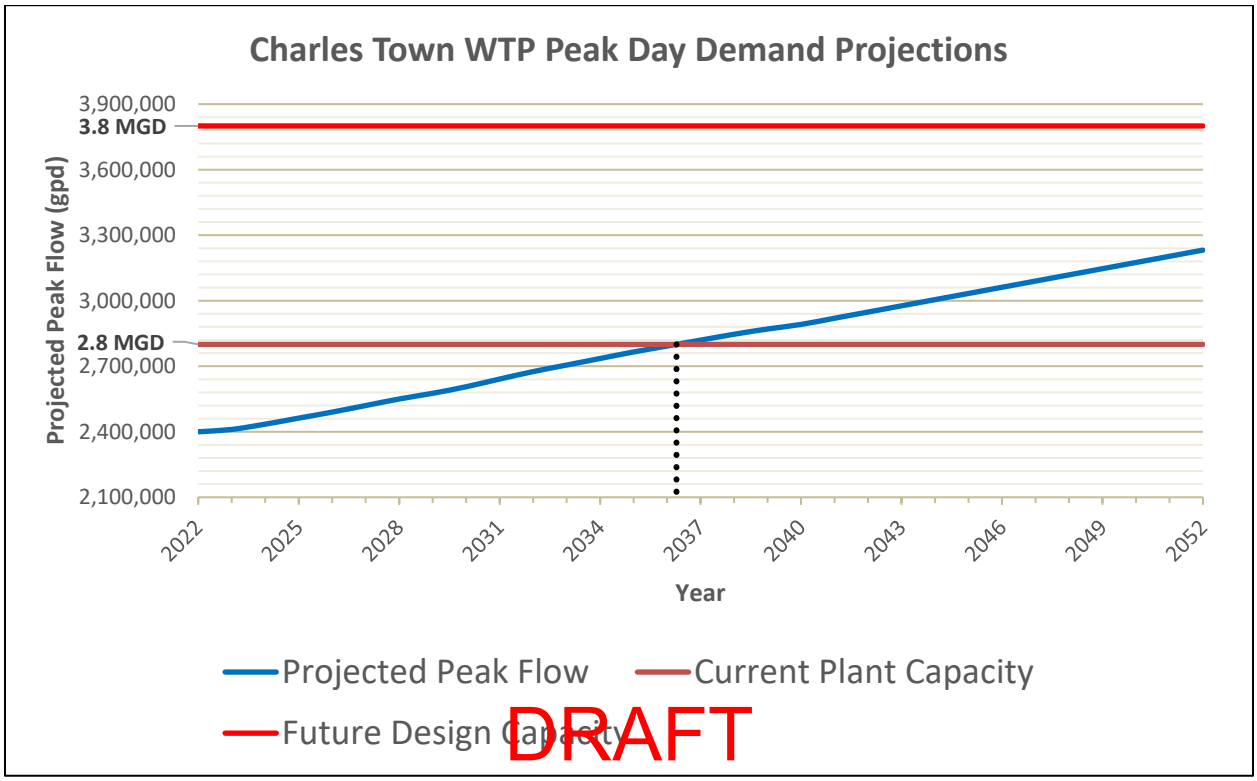

Figure 4 clearly shows the need for increased drinking water production capacity in the near future. If this conservative growth pattern occurs as projected, in 2036, the peak day demand will no longer be met by the current water treatment plant. Refer to Section 4 for additional information regarding plant capacity.

Section 3
EXISTING WATER SYSTEM FACILITIES

A. Raw Water Sources

The source water for the Charles Town WTP is the Shenandoah River. The intake is located approximately 600 feet upstream of the Route 9 bridge. Since the City's intake is located approximately eight (8) miles above the Shenandoah's confluence with the Potomac River, nearly the entire two (2) million acres, or approximately 3,000 square mile, Shenandoah River watershed contributes to the flow at the intake location.

The River has been known for sudden high raw water turbidity spikes at the plant (>300 NTU) during rain events. The River has also historically been subjected to high TOC concentrations (>4 mg/L) and recently has had its share of algae formation concerns. The City recently installed a HACH Water Quality Monitoring Station at the intake through a Source Water Protection Grant. This instrument provides the operators with online water quality monitoring that can alert them of potential contamination events and/or changes to the baseline River water quality.

The City is currently in the process of seeking a supplemental source of raw water supply to the plant. Groundwater wells and potential Springs within a few miles of the existing water treatment plant have been the focus. These sources would not only act as a backup if the Shenandoah becomes contaminated, but would lead to better finish water quality at the treatment plant. These sources have lower TOC concentrations which would lead to a decrease in DBPs. Also, these supplemental sources would assist with colder weather/freezing issues at the sedimentation basin and would lower the raw water temperature during the hot summer months to combat DBP issues.

DRAFT

A Phase I and Phase II hydrogeological investigation have been completed by Terracon Consultants, Inc. out of Ashburn, Virginia. Two (2) potential well/spring sites are currently being evaluated. One is located on the Wydmyer Farm and is known as the Cattail Spring and the other is located near the intersection of S. George Street and S. Samuel Street in Charles Town. The City plans to pursue well pump tests and water quality testing of the sources this year. Ultimately, drilled wells with well buildings/pump stations would be constructed along with conveyance piping to the WTP. Associated easements or property acquisition must be obtained and power and utilities to the sources must be provided. A desirable well/spring yield of about 500 gpm is being sought to supplement the River.

1. Raw Water Intake System Overview

The existing raw water intake system was placed into operation in 1990. The raw water intake system includes the intake screen, two (2) vertical pumps and a circular concrete wet well. Currently, there are no regulations governing the maximum amount of water that the City can pull from the Shenandoah River source.

Raw water is drawn through a single 27-inch diameter stainless steel tee screen, anchored to a concrete pier. The invert of the screen is located approximately 6 inches from the river bottom and has a rated capacity of approximately 4.7 MGD when clean. At this maximum rate, the flow velocities through the tee would be over 1.8 feet per second (fps); however, at the current capacity of the plant, the flow through velocity is approximately 1.0 fps which is greater than 0.5 fps that is required. The tee outlet connects to a 20-inch diameter ductile iron pipe which spans a length of 560 feet beneath the river bottom extending back to the pump station.

The pump station is located on the west bank of the Shenandoah River, with access to the station located above the 100-year flood plain elevation. The 13'-6" high reinforced concrete structure contains two (2) 125 horsepower raw water vertical turbine pumps. The rated capacity of each pump is 2,083 gpm at a total discharge head of 180 feet. The pumps currently lack variable frequency drives (VFDs); however, new VFDs have been ordered and will be installed in 2022.

The City also owns a portable 8-inch pump that is capable of providing 1,800 gpm to the existing wet well in the event of an existing tee screen or wet well supply line failure.

Potassium permanganate is added to the raw water at the pump station with an approximate dosage of 0.5 mg/L. This helps control taste, odor and assists in TOC removal.

DRAFT

Per recent LT2 source water monitoring for *Cryptosporidium*, the system is currently classified by the EPA as a "Bin 1," thus requiring no additional treatment.

2. Treatment Process Overview

The WTP began operations in 1990 and has featured several upgrades since this time. The most recent upgrade was completed in 2016; however, no additional plant capacity was included in that project. The project consisted of a new flocculation basin, sedimentation basin with inclined plate settlers, a new sludge thickening system, 1.0 MG clearwell and finish water pump, SCADA and telemetry system upgrades. The entire facility is sited on approximately 4.5 acres of land. A site plan is provided in Figure 6.

The Charles Town WTP is a 2.8 MGD conventional treatment facility. Raw water from the Shenandoah River is treated via coagulation with poly-aluminum chloride (PACl), flocculation, sedimentation, filtration and chlorine and ammonia disinfection with fluoride addition. A treatment schematic is provided in Figure 5.

The average water demands are less than 2.8 MGD, however, the plant still operates at full capacity to produce the water in under 17 hours.

Figure 5: Treatment Process Schematic

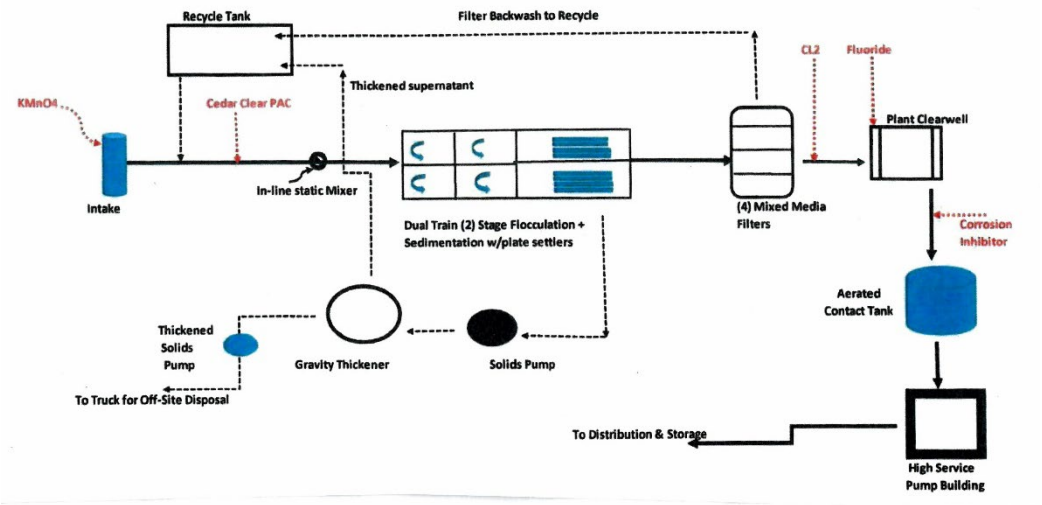

Raw water is coagulated with PACl at typical dosage values in the 30 - 70 mg/L range (total product). The coagulant is dosed to the raw water supply after blending with recycled backwash and filter backwash waste water. Hydrofluorosilicic acid (fluoride) and a zinc orthophosphate corrosion inhibitor are added to the finish water. Mixing of raw water chemicals is accomplished by an inline static mixer. Caustic soda is not currently being fed for pH adjustment. Liquid ammonium sulfate is added after the clearwell for DBP reduction.

DRAFT

Following coagulation, the flow is split and flows through dual train, two (2) stage flocculation basins. Mixing in each flocculation basin is accomplished with variable speed vertical shaft paddle wheel flocculators. At peak production capacity, the detention time within each basin is approximately 30 minutes.

The flocculated water then flows to one of two (2) inclined plate settling basins. At peak production capacity, the detention time within the sedimentations basins is approximately 60 minutes per basin. The settled water turbidity is abnormally high and ranges anywhere from 0.80 to 4 NTU. The average settled turbidity is just over 0.70; however, it has gone above 3.0 with the current recycling system. This is attributed to the plant running at its maximum capacity which is resulting in poor settling and the process waste recycle.

Solids from the sedimentation basins are pumped to a 13,000-gallon gravity solids thickening tank. The sludge accumulated in the thickener is currently being stored on site and transported off site to the existing City owned Charles Town Wastewater Treatment Facility for processing. Decant from the thickening tank flows back to the recycle tank.

Figure 6: Existing Site Plan of Charles Town WTP (from RK&K Engineers, 2016)

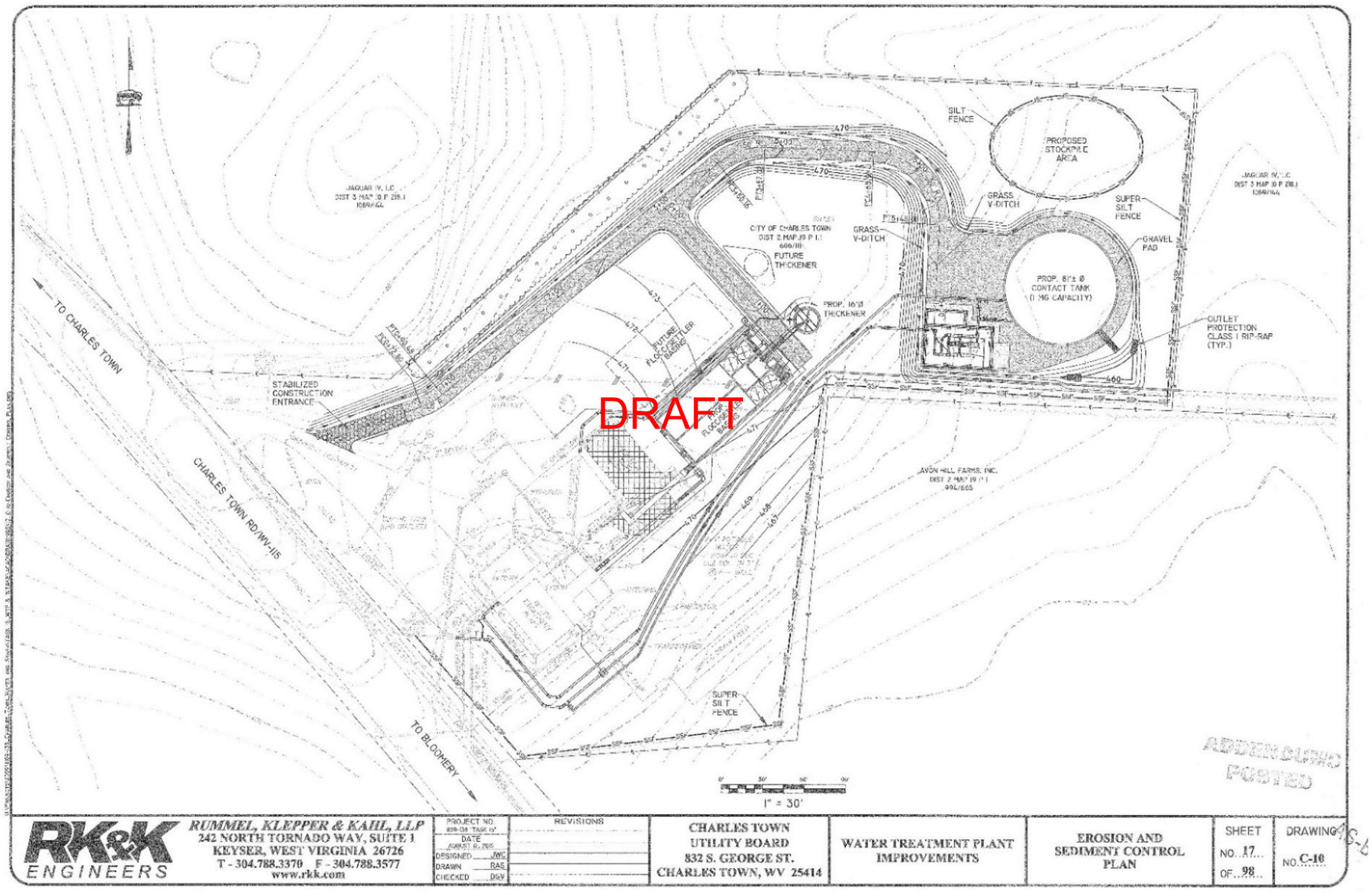

Following sedimentation, the clarified water passes through one of four (4) mixed-media filters. The filter beds are 30 inches deep, comprised of 18 inches of anthracite, 9 inches of medium sand and 3 inches of high-density sand and 3 inches of course garnet. The filters have been designed to operate on a declining rate basis, which means the flow rate decreases as the filter bed captures solids, and, as such, there is no flow rate control through the filters. The total surface area of the filters is approximately 484 ft^2 which translates to a loading rate of 3.8 gpm/ft^2 at the peak production rate of 2.8 mgd and approximately 5 gpm/ft^2 when one filter cell is being backwashed. It should be noted that the design filtration rate is 4.0 gpm/ft^2. The filter media was replaced in all four (4) filters in 2017.

The four (4) filters are tied together hydraulically at the inlet end. Since there is no rate control on the filters, the result is that more flow goes through the cleanest filter than the others. The flow rates to the individual filters balance at the level where the head loss through each is equal. In a situation where one filter is clean and one or more of the others very dirty, this could result in significant excess flow through the clean filter. The operators have a standard procedure through which the raw water pumps are turned off when the operators notice the filters overflowing, which happens frequently.

The lack of rate control is exacerbated by the plant's practice of running the plant at near the peak capacity at all times. It is likely that the cleanest filter receives substantially more flow than the 4 gpm/ft^2 design value. There are currently no level sensors in the filter beds. As the levels on the filters rise, more flow and more particulates are forced through the media resulting in undesirable increased filter effluent turbidity. Mud ball accumulation in the tops of the filter beds has been an ongoing issue. The air scour filter cleaning system has been broken and offline now for several years. The existing filter valves and pneumatic air system are outdated and are currently being replaced.

DRAFT

The backwash system allows for the filters to be backwashed at a rate of approximately 16 gpm/ft^2. The total backwash process lasts about 15 minutes and utilizes about 12,000 gallons per wash. Filter backwash water is supplied directly from the old 36,000 gallon clearwell; however, the filter to waste mode immediately after backwashing is currently not working due to faulty valves that are difficult to access. This is currently resulting in unwanted turbidity spikes following all backwash events. Spent backwash and filter to waste water are sent to a 65,000 gallon concrete equalization tank where it is recycled back into the raw water prior to coagulation. One (1) filter is backwashed each day.

Filtered water enters a circular clearwell with a baffling factor of 0.10 for final disinfection and finished water storage. At this point, gaseous chlorine, fluoride and a corrosion inhibitor are added. The capacity of the new clearwell is 1.0 million gallons when full. The clearwell contains a Grid Bee (GS-12) tank mixing system. Liquid ammonium sulfate is added after the clearwell.

All process wastewater is recycled and there is currently no NPDES discharge. The settled solids, filter backwash waste, filter overflow water and thickener tank overflows go into the recycle tank. The EPA limits the recycle pumps to a maximum of 10% of the combined

raw water flow rate. The recycle water is very turbid and heavy laden with high TOC. The recycle water is compounding the filter turbidity issues as well as the elevated distribution system DBP issues.

The existing 1-ton chlorine gas feed system requires major safety upgrades. The doors are rusted and lack the proper panic hardware with door contacts. The electric heater is undersized. There is no view window between the chlorine feed room and cylinder room. The chlorine gas leak detector needs tied into the SCADA system. There is no backflow prevention on the potable carry water line. New chlorine gas signage is also required along with an updated emergency kit. A new automatic flow proportional valve is needed such that the chlorine gas injection can be flow paced into the finished water. The above improvements to the chlorine gas feed system are scheduled for this year.

Chemical Feed Systems

The following chemical feed systems exist: potassium permanganate ($KMnO_4$), poly-aluminum chloride (PACl), fluoride, corrosion inhibitor, caustic soda, chlorine and ammonia. A summary of the chemical feed systems for each respective chemical is provided in Table 3.

Table 3: Chemical Feed Summary

DRAFT

Chemical	Purpose	Dose
$KMnO_4$	Pre-oxidant	0.5 ppm (added at intake)
PACl	Coagulant	30-70 ppm
Caustic Soda	pH adjustment	Not Used
Fluoride	Dental Health	0.70 ppm
Corrosion Inhibitor	Distribution Corrosion	1.5 ppm
Chlorine Gas	Disinfection	95 ppd
Ammonium Sulfate	Chloramination	4 ppm

Potassium permanganate ($KMnO_4$) is added at the intake wet well in powder form. The permanganate feed system consists of a pre-mixed solution with 9 pounds of dry chemical to 30 gallons of water and then is pumped into the wet well.

Coagulant is added to the raw water in the form of a 100% solution of CES PACL 900S ahead of the inline static mixer. The coagulant feed system consists of a 2,600 gallon bulk tank and is housed in a dedicated concrete curb area. Jar testing is utilized to adjust the chemical dosage manually by speed of the pump.

Fluoride is added to the finished water in the form of a 23% hydrofluorosilicic acid solution. The fluoride feed system consists of a 300 gallon bulk tank and is housed in the same room as the corrosion inhibitor. The bulk tank features an ultrasonic level transmitter.

A zinc orthophosphate corrosion inhibitor is added to the second clearwell. The zinc orthophosphate feed system consists of a 300 gallon bulk tank and is housed in the same room as the fluoride. The bulk tank features an ultrasonic level transmitter. The orthophosphate is fed to reduce the rate of corrosion of metal pipes in the distribution system which helps limit potential lead and copper release as well as water quality complaints.

Chlorine disinfection is provided via chlorine gas. The chemical feed system utilizes dual, one-ton containers, scales, and vacuum regulators with an automatic switchover. The entire chlorine feed system is housed in an isolated room with an audio/visual alarmed, chlorine leak detector.

The delivery of the one-ton chlorine gas cylinders is coordinated to ensure that the amount of gaseous chlorine stored on site is less than 2,500 pounds. Chorine gas is a dangerous chemical, and as such, there are risks and required management/reporting associated with the storage of chlorine gas in excess of 2,500 pounds. As the population grows in the area surrounding the treatment plant and the potable water demands increase, the City should seriously consider switching to a liquid chlorine delivery system which will result in much less potential risk to staff and neighbors in the event of a leak.

Liquid ammonium sulfate (40%) is fed after the clearwell to convert free chlorine to monochloramine. This is currently assisting in lowering the DBPs in the distribution system.

DRAFT

There are currently no calibration columns located on the chemical feed pump suction lines. Each chemical feed station only has one (1) online chemical metering pump and the chemical doses are varied manually. There is no flow pacing of chemicals based on the raw or finished water flow rates. Spill containment for the chemicals is lacking, specifically in terms of bulk tank containment. Some systems are missing tank level sensors and the sizes and venting of tankage is a concern. The tanks do not contain air-tight lids and chemical off-gassing is present in the facility. This can lead to corrosion and health concerns for the plant operators. Proper ventilation is also questionable throughout the treatment facility. All of these items chemical feed items should be considered in the plant upgrade project; some of them are scheduled to be addressed at the existing plant this year.

Section 4
WATER TREATMENT PLANT IMPROVEMENTS

A. General

This chapter contains a detailed list of recommended improvements that should be made to the Charles Town Water Treatment Plant. The effective capacity of the plant was reviewed and the current regulatory environment was summarized with respect to the potential impact on treatment requirements. The chapter also presents options for increasing the treatment capacity and includes a review of alternative treatment processes.

B. Capacity Assessment

The average plant production is 1.7 MGD. This number has been fairly consistent over the past few years, even as the population has increased. This is attributed to the lower percent lost water number. The City still strives to reduce the lost water percentage and plans to implement projects such as lead service lateral replacements, meter upgrades, main replacements, etc., over the next few years.

Due to the current Ranson and Charles Town population growth percentages, GD&F recommends assuming that the water plant production will increase by about 15% in the next 10 years, and subsequent ten-year periods. At this projection, the following average daily demands will be anticipated over the next 30 years. In 2032 the estimated average daily demand would be 1.955 MGD, in 2042 it would be 2.24 MGD and in 2052 it would be 2.58 MGD. The projected peak flows listed in Table 1 were: 2.67 MGD in 2032, 2.95 MGD in 2042 and 3.23 MGD in 2052.

DRAFT

According to the WV Department of Health, they would prefer that water treatment facilities operate for no more than 16-18 hours per day. This gives the operators at least one (1) six to eight-hour shift to address any major issues or make repairs while the plant is offline. Thus, the treatment facility should be designed to produce 2.58 MG in seventeen (17) hours since this is the current operating duration. This equates to a plant flow rate of 3.64 MGD. Since this value is larger than the 3.23 MGD calculated using the projected peak flow, the higher of the two (2) numbers should be used. GD&F recommends utilizing 3.8 MGD, which is 1.0 MGD greater than the current WTP. This should be the design flow rate of the new water treatment facility.

C. Treatment & Regulatory Goals

1. Status of Regulations

The United States Environmental Protection Agency (USEPA) is in a continuous process of modifying and expanding drinking water regulations under the 1986 Safe Drinking Water Act (SDWA) and its subsequent amendments. Rules that are now in effect provide two levels of criteria that comprise the primary and secondary drinking water standards. Primary Drinking Water Standards are based on health-related criteria that require mandatory enforcement by state primacy agencies (West Virginia Department of Health and Human Resources). Secondary Drinking Water Standards are based on criteria that are intended to control water aesthetics (i.e. color, taste, odor) and do not pose a health

risk at levels realized in nearly any type of source water. Unlike primary standards, parameters developed as secondary standards are established as guidelines to be enforced at the discretion of the state primacy agency, but are not required in order for the agency to maintain primacy. Although parameters governed by secondary standards are not health-based, they can have a significant effect on customer satisfaction. Secondary standards include parameters such as color, taste and odor, iron, and manganese.

Two (2) primary drinking water regulations especially critical for both current compliance and for planning at the CTWTP in the near future include:

- Surface Water Treatment Rule (SWTR) and Enhanced Surface Water Treatment Rules (ESWTR), which provide for protection against microbial pathogens with specific criteria for *Cryptosporidium*, Giardia, viruses and Legionella.

- Disinfection Byproducts Rules, which regulate disinfectant residuals and disinfection byproducts that are formed by reactions of various disinfecting agents with constituents in water.

The ESWTR consists of the Interim Enhanced Surface Water Treatment Rule (IESWTR), the Long-Term 1 Enhanced Surface Water Treatment Rule (limited applicability to the Charles Town system) and the Long-Term 2 Enhanced Surface Water Treatment Rule. The IESWTR regulations require filtered water turbidity ≤ 0.3 NTU in at least 95 percent of samples taken each month, with established action limits for turbidity excursions over shorter periods of time. In addition to these turbidity criteria, the West Virginia Bureau of Public Health encourages utilities to meet goals established by the Partnership for Safe Water, a cooperative effort between the USEPA and the American Water Works Association (AWWA). These criteria have established a more stringent, voluntary turbidity goal of less than 0.1 NTU in at least 95 percent of samples.

DRAFT

The third part of the ESWTR regulations is the Long-Term 2 Enhanced Surface Water Treatment Rule (LT2ESWTR). This regulation requires varying levels of treatment depending on the potential risk of *Cryptosporidium* in a source water. Under the LT2ESWTR, the amount of *Cryptosporidium* risk is classified into "bin categories" that are determined based on the extent to which sampling shows *Cryptosporidium* to be present in raw water. Based on early sampling of larger water systems, many utilities find they do not have significant levels of *Cryptosporidium* in the raw water, placing most utilities in a Bin 1 classification. Plants that fall into a Bin 1 classification are not required to add any additional treatment beyond meeting the turbidity limits set forth in the IESWTR.

The City's recent testing resulted in a Bin 1 classification; however, the raw water source will continue to be subjected to future testing.

The disinfection byproduct regulations consist of the Stage 1 Disinfectant/Disinfection Byproduct Rule (D/DBPR) and the Stage 2 D/DBPR. The Stage 1 DBPR includes requirements for total organic carbon (TOC) removal as well as for control of disinfection byproduct formation in the system. TOC removal requirements are based on the TOC concentration and the alkalinity in the raw water. The Shenandoah River in the area of

the City's intake typically has alkalinity levels of greater than 120 mg/L and TOC levels ranging from 2 to 4 mg/L. At these raw water conditions, 15 percent TOC removal is required to comply with the Stage 1 D/DBPR. The City routinely complies with this TOC removal percentage. Additional TOC removal is currently required if the City wishes to eliminate the chloramination process.

The Stage 1 D/DBR also set disinfection byproduct limits of 80 µg/L and 60 µg/L, respectively, for total trihalomethanes (TTHMs) and haloacetic acids (HAA5s) on a system-wide average basis over four (4) consecutive quarters. Stage 2 of the Disinfectants/ Disinfection Byproducts Rule has strengthened the regulation to require compliance with these levels on a four-quarter running average basis at a variety of sampling locations within the distribution system.

The EPA uses the Unregulated Contaminant Monitoring Rules (UCMRs) to collect data for suspected contaminants in drinking water that do not currently have health safety standards. The EPA is currently up to their 5th round of such testing/monitoring. Most of these focus on various organic contaminants such as endocrine disrupters, pharmaceuticals and personal care products. These are possible candidates for future regulations.

2. Treatment Goals

Gwin, Dobson & Foreman, Inc. has developed treatment goals to form the basis for evaluation of potential treatment process sequences. A list of goals is provided in Table 4. These goals were dictated by the aforementioned regulations and provide a set of criteria that must be reached to avoid non-compliance as well as exceed the minimum removal required to satisfy the regulatory requirements of some key water quality parameters. These higher goals were set to either assure customer acceptance from an aesthetic standpoint or to provide greater comfort and assurance with respect to public health.

DRAFT

Table 4: Charles Town Potable Water Quality Goals

Parameter	Goal
Settled Turbidity	<1.0 NTU
Finished Turbidity	<0.10 NTU
Giardia/Cryptosporidium	Multiple Effective Barriers – 4-log removal
LRAA TTHM (Median 4-qtr LRAA)	≤60 µg/L
LRAA HAA5 (Median 4-qtr LRAA)	≤45 µg/L
TOC Removal % (12-month median)	15-25% Pretreatment [25-75% with GAC]
Iron	<0.10 mg/L
Manganese	<0.02 mg/L
Color	≤5 pcu
Lead (90th Percentile)	0.005 mg/L
Copper (90th Percentile)	0.4 mg/L
Distribution Microbials	Limit Regrowth
System Corrosion/Discoloration	Minimize

D. Discussion of Treatment Facility Needs

The existing treatment facility does not consistently meet the settled turbidity or finished water turbidity treatment goals. The process wastewater recycle process is the leading factor to this problem. The settled TOC values are just barley being met, additional TOC removal is necessary to eliminate chloramination and effectively reduce the disinfection byproducts.

Another treatment goal where there is concern between the treatment goal and the CTWTP is the barriers for Giardia and *Cryptosporidium*. The design and operation of the existing sedimentation basins and media filters create a situation where they may not be serving as consistent barriers to Giardia and *Cryptosporidium*. A discussion of these problems occurs in the following parts of this section.

1. Raw Water Intake

As mentioned previously, the CTWTP currently draws water from the Shenandoah River. The intake structure is located approximately six (6) inches above the river bottom. At this location, the historical minimum depth of the river is approximately five (5) feet. The raw water intake system consists of raw water screens and a conveyance pipe leading to the pump station.

Raw Water Screens

DRAFT

The incoming water is screened through a single stainless steel tee and then conveyed through approximately 560 feet of 20-inch diameter ductile iron pipe which crosses the river bottom to reach the raw water pumping station. The intake structure has a reported capacity of 4.7 MGD. At this flow, the velocity through the screen is 0.52 ft/sec.

Flow velocities through intake screens are typically designed to be less than 0.5 ft/sec to minimize the impact to aquatic life and also to ensure a uniform flow pattern through the screen. If the flow were to increase significantly above 0.5 ft/sec its operation would be more difficult and impact to the aquatic life may be noticed.

Solids that accumulate on the submerged intake screen due to the suction are removed using an air burst system. This system delivers strong pulses of high pressure air across the screen to remove debris. Operators have reported that, at times, the air burst system performs poorly, especially at times of high turbidity. During turbidity events, the air burst system must be used very frequently (approximately every 5 minutes) to ensure the intake does not become clogged.

The intake has experienced a significant problem with the accumulation of frazil ice (similar characteristics to a "slushee") on the screen. This accumulation is caused by super-cooled water that freezes in the quiescent water, using the screen as a base. This problem can be addressed by a new fully functioning and redundant airburst system that could periodically be used in cold weather to prevent the formation of the frazil ice.

Currently, there are no regulations/limitations regarding the volume or rate of water the City can pull from the Shenandoah River. Flow in the river is more than adequate to meet the increasing water demands of the service area. The lowest flow on record in the Shenandoah at the Millville gauging station was 126 MGD, measured on July 24, 1930 (Chester Engineers, 2001). However, as noted above, the intake and screen structure will need to be expanded at the same time as the treatment plant to provide adequate capacity.

Screen and Airburst System

A second redundant tee screen, supply line and concrete debris deflector are recommended such that there is adequate supply of raw water to the treatment plant.

The existing intake structure and pump station were designed and built with cut-outs for relatively easy placement of a second intake pipe. Adding a second 20" intake pipe at the time of plant expansion will ensure that flow velocities within the pipe and within the intake screens remain below engineering limitations and will provide redundancy. Also, the existing 20” wet well supply line knife gate valve should be replaced due to its current age and condition.

A new automatic air burst screen cleaning system should also be installed for each of the two (2) screens with new stainless steel air supply lines. A level sensor should also be added to the wet well and everything should be tied into the plant SCADA system. The airburst system can then automatically airburst the screens in the event of a low wet well level.

DRAFT

A new upstream tee screen concrete diversion structure should be installed out in the river to protect the integrity of the screens and consist of a grated top to keep the leaves and other debris from clogging the screens. This would require a permit through the Army Corps of Engineers. Refer to Appendix A for an example of a new concrete debris deflector with secondary screen.

2. Raw Water Pumping

Water is conveyed from the intake to the raw water pumping station on the west bank of the river. The pumping station consists of two (2) 125 horsepower pumps, with a combined capacity of approximately 6 MGD. As a result, the firm capacity of the pumping station, with one pump out of service, is approximately 3 MGD. Raw water from the pumping station is pumped through a 7,400 foot, 16-inch DIP to the treatment plant. The pumps have been rebuilt several times and are currently scheduled to be rebuilt this year. The pump motors may be original and should be replaced as part of the upgrade project. New pump VFDs are scheduled to be installed in 2022.

Pump Station

Based on projected demand increases, the firm capacity of the raw water pumps will meet the potable water demands for the foreseeable future.

Conveyance Pipe

Calculations of headloss and velocity were done to assess the capacity of the existing 16-inch DIP. It was concluded that the 16-inch diameter raw water conveyance pipe is more than adequate to meet the future demands of the system.

3. Rapid Mix

The existing inline static mixer is 16“ diameter and was replaced several years ago. A new inline static mixer should be considered in the upgrade project sized for the maximum plant capacity.

4. Flocculation & Sedimentation

a. Flocculation

Following rapid mix, flow is split into two (2) dual stage flocculation basins. The detention time in the flocculation basins at peak production capacity is 30 minutes. The basins contain vertical paddle wheel mixers with variable speed drives. Currently, the performance of the flocculation basins is satisfactory.

The flocculation basins were constructed in 2016 and are in relatively good physical condition. However, increasing the capacity of the plant would ultimately require an increase in volume of the flocculation basins to meet treatment goals. Consideration should be given to keep the existing treatment plant in operation while constructing new flocculation basins.

DRAFT

b. Sedimentation Basins

Flocculated water flows to two (2) parallel sedimentation basins. Both basins are fitted with inclined plate settlers. The detention time in the basins at peak capacity is approximately two (2) hours.

Both sedimentation basins were constructed in 2016 and are in good physical condition. When the settled solids are adequately removed, the sedimentations basins can produce settled water with turbidities less than 1 NTU. However, there are often significant basin performance issues when solids accumulation at the bottom of the sedimentation basins is excessive. As such, solids removal is critical to the overall performance of the facility, and, as plant data has shown, inadequate solids removal in the sedimentation basin results in floc carry over to the filters and potential turbidity breakthrough. Another issue is the overall size of the existing sludge thickener tank. This tank is currently undersized and is the limiting factor in the operators being able to adequately remove sludge from the basins.

The current sludge processing process is not working very effectively. Solids have to be constantly and consistently hauled offsite for further processing.

The existing sedimentation basins also lack proper detention time. It is recommended that a minimum of four (4) hours of detention time for proper solids settling be implemented. Also, the incline plate settlers appear to work fine; however, they are difficult to clean. The current sludge vacuum system has had its share of problems. Currently, there is no way to drain the flocculation tanks or sedimentation basins. The basins are currently full of bio-growth.

Consideration should be given to new sedimentation basins with at least four (4) hours of contact time between the existing and new basins combined. The new basins should be equipped with fiberglass chain and scrappers and a sludge hopper area. Automated drain valves and flow meters should be installed to displace the accumulated sludge from the basins. FRP weirs and troughs should be installed along with a new effluent channel and level sensor. See attached Appendix B for typical flocculation and sedimentation basin drawings.

5. Filtration

After sedimentation, the water is passed through one of four (4) multi-media filters. The filters operate in a declining rate mode of filtration; the water level in all four filters is the same and more water simply passes through the cleanest filter. As a result, under this mode of operation, the filters do not have individual flow control. The filter boxes are designed to allow the common water surface level to fluctuate as overall (or average) headloss through the filters varies. The water level rises as the filters become dirty and the overall headloss increases and reaches a point where the dirtiest filter must be backwashed to reduce headloss. Low headloss levels must also be managed to reduce the potential for an excessive filtration rate. Filter backwash water is currently recycled back to the headworks of the plant. It is recommended to replace the conventional filters with a new low pressure microfiltration membrane system. Refer to the Alternatives Evaluation section of the report for more information.

DRAFT

6. Clearwell

A legacy baffled clearwell of 36,000 gallons is still used immediately after the filters. Filtered water is pumped to a new 1.0 MG clearwell which provides storage of treated water prior to distribution via the finished water pumps. The clearwell also provides disinfection contact time to meet the associated regulatory requirements. The WTP clearwell is a circular concrete structure with a submersible mixer. The associated tank baffling factor is 0.10, thus the effective clearwell volume is 100,000 gallons. Between the old and new clearwell, the minimum 0.50 log inactivation is easily achieved. The newer 1.0 MG clearwell will provide sufficient chlorine contact time to meet the anticipated future demands. The existing legacy clearwell should be abandoned. To facilitate better baffling, the submersible mixer should be removed in the new 1.0 MG clearwell and an interior tank baffle wall should be added between the tank inlet and outlet pipes. A mixer can promote short-circuiting and lead to a reduced baffling condition.

7. Finished Water Pumping

Following the clearwell, finished water is pumped and metered to the distribution system. The finished water pumping system consists of two (2) 150 HP, manually-controlled, horizontal centrifugal pumps each rated for 1,945 GPM at 229 feet TDH. The pumps were installed in a new Pump Building in 2016. Pump operation is based on maintaining a desired water level in the Route 9 storage tank.

The pumping system has met the needs of CTWTP; however, the firm capacity of this pumping system is 2.8 MGD. As water demands increase, this capacity will be insufficient and these pumps and their associated electrical items will need upgraded and/or a third pump added.

8. Chemical Feed Systems

Refer to previous Section 3 for additional information.

9. Residuals Handling and Disposal

Residuals handling primarily involves removing solids from the sedimentation basins which are conveyed to a sludge thickener tank. The decant water is recycled back to the head of the plant. The solids are currently being disposed of offsite to either the existing Charles Town Wastewater Treatment Facility or to another sewer plant for processing. Hauling and disposal costs vary based on the amount of solids produced.

DRAFT

In terms of alternative residual handling alternatives, there is no public sewer connection available at the treatment plant to convey plant solids and residuals to a wastewater treatment facility. The current CTUB sewer system; however, is within one (1) mile of the water treatment plant. Construction of a sewer line from the WTP property to the existing CTUB sewer is a viable option for solids disposal. Alternatively, CTWTP could pursue a NPDES permit and return all liquid waste to the Shenandoah River. However, the NPDES option would require the construction of concrete bottom lagoons for solids drying and over a mile of gravity piping. These dried solids would also then need to be periodically disposed of.

Currently, filter waste water is recycled to the head of the plant, which typically degrades the quality of the plant influent and provides the potential for particulates and pathogens removed by the filters to be recycled back to the head of the plant.

10. General Facility Issues

The CTWTP was constructed in 1990, and, as such, it has been in operation over thirty years. While the physical condition has been maintained, many of the original plant components are in need of modernization and upgrade to accommodate increased production requirements and enhanced water quality goals.

a. Condition of treatment structures and buildings

There are no known or obvious structural issues at the plant site. The buildings and treatment structures appear to be in fair condition. The basement and pipe gallery are congested, wet and make it difficult to perform maintenance.

b. Space (office, lab, locker, meeting, restroom, etc.)

There has been no physical expansion of the CTWTP since its construction in 1990. The office, lab, locker room and restrooms provide adequate space to meet the current needs of the staff and visitors to the plant.

The laboratory at the treatment plant appears to have adequate space, but some analytical equipment and other labware should be upgraded and additional equipment may be required in the future.

c. Code Issues

There are some current issues with the Chlorine Gas that are discussed in Section 3 of the report.

d. HVAC Issues

DRAFT

There are no known heating, ventilation, air conditioning (HVAC) issues associated with the existing facilities. However, in conjunction with plant expansion, plant support systems such as HVAC and plumbing should also be modified and improved as required to support the expanded plant.

e. Electrical and Instrumentation & Control (I&C), Standby Power

There are no known significant issues with the electrical and instrumentation and controls systems at the plant. Backup power is provided for both the intake and WTP via standby emergency generators. The existing generators would have to be evaluated as part of the upgrade project design to see if they can be re-used.

f. Security

The overall security at the CTWTP could be improved. Currently, there are no entry checkpoints, alarm systems or identification system at the plant. These relatively simple improvements could significantly increase the security of the plant and decrease the chances of theft, vandalism or contamination at the plant.

The treatment plant site is completely surrounded by a chain link fence. Consideration for a closed circuit television system should be considered as part of the plant upgrade.

g. Maintenance, Shop, Parts Storage

The CTWTP was designed and constructed with auxiliary space for maintenance and shop activities as well as for parts storage. These spaces are in reasonable condition and have adequately served the needs of the treatment plant operators. Similar to the office and lab spaces, the need for additional parts, shop and maintenance space will increase as plant production increases.

E. Recommendations

Based on the evaluation of the existing facilities, the following recommendations were developed. The intent of the recommendations is to ensure that the City of Charles Town continues to meet treatment goals at the projected future flow rate of 3.8 MGD. Capability to meet future flow rates can best be accomplished by construction of a new treatment facility.

1. Recommendations for Capacity Increase

Expansion of the existing plant to a 3.8 MGD water treatment facility that consists of backup sources, raw water intake system upgrades, new inline static mixer, flocculation and sedimentation basins modifications and expansions, membrane and GAC filtration and UV and sodium hypochlorite disinfection. Also, construction of a new pump station to convey process waste to the existing CTUB system. The new treatment plant should be designed with room for modular expansion.

DRAFT

a. Additional Raw Water Sources and Water Quality Data

- Either develop a pump station for Cattail Spring or develop a well on Todd Wydmyer's property. Extend power to well and a waterline to the existing WTP.
- Develop a well near the intersection of S. George Street and S. Samuel Street. Extend power to the well and a waterline to the existing WTP.
- An extensive raw water quality analysis should be performed during the design to ensure plant meets all regulations.

b. Raw Water Intake System

- Install a parallel 20" intake pipe leading from the river to the raw water pumping station along with a new stainless steel air line. Add a second T-screen and replace the existing 20" knife gate valve.
- Install a cast-in-place concrete diversion structure in the river upstream of the two (2) screens. Place a secondary stainless steel grating structure on top of the diversion structure to further protect screens and to prevent leaves and debris from entering screen openings. Leave downstream end of concrete diversion structure open.
- Add an automatic airburst screen cleaning system inside the pump station that features a control panel, fast acting pneumatic valves, dual air compressors and air receiver tank. The panel should be programmed to automatically utilize compressed air to clean each screen.

- Add a new ultrasonic level transmitter to the intake wet well.
- Add a new telemetry system for communication between the intake system and water treatment plant.
- Provide new 125 HP inverter duty rated motors for each vertical turbine intake pump. Note that pumps will provide 2.8 MGD each and should be sufficient for several years. Once their capacity is reached, the pumps, VFDs, electrical and generator will need to be upgraded.

c. New Treatment Facility Construction

Raw Water Piping

- Connect to the existing raw water line and bring a new raw water line into the new treatment facility. Provide a new raw water turbidimeter, magnetic flow meter and inline static mixer on the line. Also provide sample taps, chemical injections, and air release valves.

Flocculation and Sedimentation Basins

- Construct a new concrete dual stage flocculation basin where each of the two (2) basins yields 30 minutes of contact time when added to the existing flocculation basins at the plant design flow rate of 3.8 MGD. Provide new variable speed floc mixers and mud valves on each floc drain with associated drain piping.
- Continue utilizing PACl for coagulation. Provide a new bulk chemical feed system inside the Chemical Room of the new plant.
- Provide two (2) new sedimentation basins each sized such that there is a four (4) minimum detention time at plant design flow rate of 3.8 MGD, when using the existing and new basins.
- Provide two (2) new chain and scraper sludge collectors.
- Provide new effluent fiberglass weirs and troughs.
- Provide new submerged pressure transducer in sedimentation basin effluent channel for level.
- Provide a common influent and effluent channel. Design a perforated wall to allow flow to enter basin evenly. Provide an underflow wall to keep solids below water surface. Slope bottom of sedimentation basins toward sludge hoppers.
- Slide gates are also required for flow isolation.
- The new structure will be above grade so aluminum stairs, grating and handrail will be required.
- Provide new precast concrete meter and valve vault for automated sludge valves and magnetic flow meters.

DRAFT

Membrane Filtration

- Construct new, low-pressure membrane filtration system with a capacity of 3.8 MGD, which allows for future expansion. A new Control Building would be necessary and the recommended building type is concrete floor slab type with masonry walls, precast concrete roof structure with EPDM roofing material. Membrane system to consist of the necessary feed tanks and pumps, prestrainers, membrane module racks, backwash tanks and pumps, compressed air system, automated chemical clean-in-place (CIP) system with neutralization and water softening system. The CIP system should be housed in a separate room with the other treatment plant chemical feed stations.
- Membrane system should utilize 0.10 micron PVDF modules type as manufactured via the Thermally Induced Phase Separation (TIPS) process. Design flux rate would be around 40 gallons per day per square foot of membrane area (GFD). One (1) membrane system skid would be fully redundant.
- Demolish the existing media filters.

GAC Filtration

DRAFT

- Construct new, low-pressure granular activated carbon (GAC) filtration system with a capacity of 2.8-3.0 MGD and expandable to 3.8 MGD for TOC removal.
- A total of six (6) 40,000 pound GAC vessels should be installed with consideration to add two (2) future tanks. The tanks should be designed in lead-lag formation such that the total membrane filtrate flow will be divided by three (3). Flow will go through the lead GAC vessel and then the lag vessel for TOC removal. Typical design flow rate is 6-10 gpm/ft^2 with contact times between 7-10 minutes per vessel.
- Automated valves and magnetic flow meters should be provided on each set of vessels for flow control.

UV Disinfection

- Two (2) fully redundant UV systems should be considered as a multiple barrier type treatment system. The UV system is a cheap alternative that does not utilize any chemicals or create any byproducts. UV disinfection assists in the inactivation of viruses and *Cryptosporidium*.

Chemical Feed Systems

- The new treatment facility should feature a separate chemical feed room housing all treatment chemicals. A bulk coagulant and sodium hypochlorite chemical feed system is recommended. All new feed systems should consist of duplex peristaltic chemical feed pumps with

calibration columns, valves, day tanks, digital scales, containment, etc. Caustic soda, acid, fluoride, corrosion inhibitor and a spare chemical feed station should be considered.

Disinfection

- The new 1.0 MG clearwell is currently adequate for CT. To increase baffling, consider eliminating the submersible mixer and installing an interior baffle wall.
- Discontinue use of chlorine gas and utilize sodium hypochlorite for free chlorine.
- Eliminate chloramination as it is no longer required due to functioning GAC system.

Solids Handling

- Construct a new pump station that conveys the water treatment plant process solids either to a new NPDES discharge location or ties into the existing CTUB sewer system. Note that two (2) concrete bottom lagoons and piping to the Shenandoah River would be necessary if the NPDES option is selected. Dried sludge would then need to be disposed of offsite. A slow and steady low-flow solids discharge rate into the existing CTUB sewer system is the preferred option.
- CTUB should explore all options of conveying process solids to their existing sewer system and work with the adjacent developer. CTUB should also contact DEP for their input during design and confirm that adequate capacity is available at the wastewater treatment plant.
- Discontinue all process wastewater recycling.

DRAFT

2. Piloting

Prior to design and construction of a new membrane and GAC filtration during design process, a minimum three (3) month piloting process must be done to establish and confirm design criteria and satisfactory process performance as well as help the City procure the most cost-effective membrane and GAC system for its specific water. Typical membrane pilot studies involve side-by-side testing of several different manufacturers. This enables a thorough examination of the process and selection of the most appropriate membrane system and GAC media for this application. The first step of the piloting process is for the engineer to prepare a Pilot Study Protocol and submit to the WV Health Department for approval.

Figure 7: Proposed Site Plan Layout for New WTP

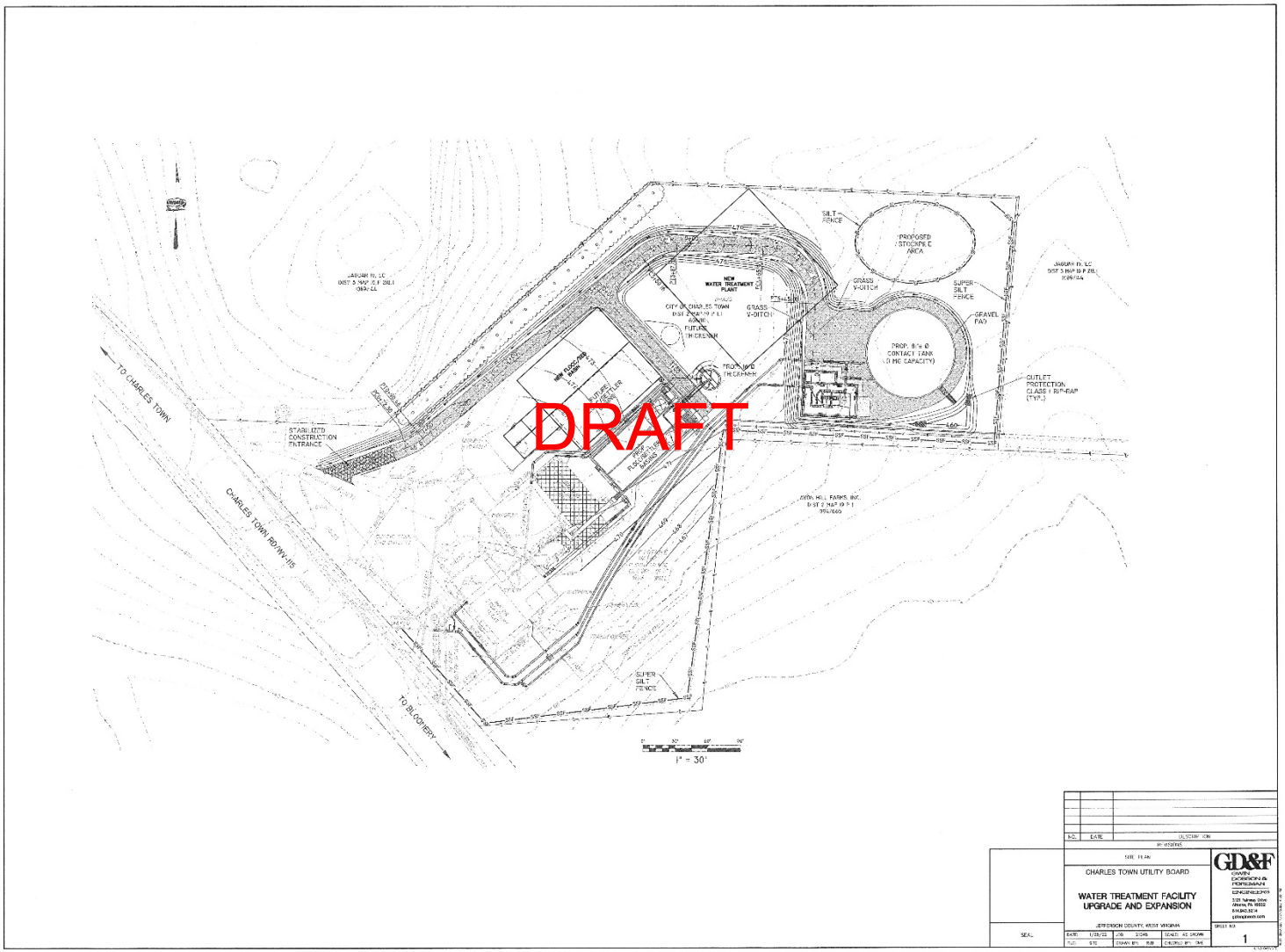

Section 5
TREATMENT SYSTEM ALTERNATIVES EVALUATION

A. Pretreatment

1. Tube/Plate Settlers

Tube/plate settlers are generally installed at an incline on the top effluent end of a sedimentation basin. The purpose of the tubes/plates are such that they collect the large coagulated floc particles on their surface. The large particles then fall to the bottom of the basin where they are removed by sludge collection equipment. The installation of these tubes/plates can reduce the required four (4) hour sedimentation detention time that is normally required for surface water down to two (2) hours, which essentially cuts the size of the sedimentation basin in half. The plates themselves are generally made of plastic material and are not very expensive to install. The existing water treatment plant currently utilizes inclined plate settlers.

While the tube/plate settlers may appear to be a cheaper alternative to a conventional four (4) hour detention time sedimentation basin, GD&F's experience with them in larger outdoor plants has been problematic. The most common issues are the solids removal systems, algae formation and excessive solids built-up on tubes/plates, freezing at tops of tubes/plates and abnormally high settled turbidity. The tube/plate settler systems require bottom basin traveling sludge removal systems that are most common vacuum systems. Issues with priming of the vacuum systems and excessive sludge build-up often render them inoperable. Also, some facilities have to continually waste solids just to keep the system functional which results in additional unwanted sludge/water removal. Due to the nature of their design, the coagulant feed rate and raw water turbidity, excessive buildup of solids on the tubes/plates is often encountered. This buildup can result in undesirable high settled turbidity and can lead to algae formation on the tubes/plates which can increase DBP formation. Due to the lower detention time, higher doses of coagulant are typically necessary, along with proper coagulation chemistry for the tubes/plates to work properly. Also, the plates/tubes must be physically cleaned several times per year and this can only be performed when the basin is drained. When the basin level is lowered, the sludge collection system does not work as well and sometimes not at all which makes this cleaning process long-lasting and difficult.

DRAFT

It is estimated that the installation of tube/plate settlers would reduce the overall capital cost of the new pretreatment system by about $500,000. When factoring in additional coagulant consumption, additional sludge waste volumes, sludge removal/cleaning issues and increased settled water turbidity, the recommendation would be to install a conventional four (4) hour sedimentation basin.

CTUB's existing water treatment plant has experienced all of the issues stated above with their current inclined plate settlers. While the capital cost is certainly less compared to a conventional four (4) hour detention time, the performance is simply not justified.

2. Actiflo Pretreatment Process

Another option for pretreatment is known as an Actiflo process which consists of ballasted flocculation clarifiers with Lamella tube settlers all located inside concrete tanks. The process is compact water clarification system that combines the advantages of microsand enhanced flocculation with lamellar tube settling. The addition of microsand serves as a flocculation aid and ballasting agent, allowing overflow rates as high as 30 gpm/ft^2. These high overflow rates result in footprints that are between 5 and 25 times smaller than conventional clarification systems of similar capacity. The Actiflo process is accomplished through a series of consecutive steps that consist of coagulation, microsand and polymer injection, floc maturation, settling and sand recirculation. Typically, due to the overall small size of the system, the tankage and equipment can be placed indoors. The system does involve a lot of equipment and materials such as 3-stage mixers, tube settlers, hydrocyclone, recirculation circuits, sand pumps, microsand and coagulant/ polymer chemical feed systems. It is also available with fully automated PLC for complete automation. The systems have been known to perform well when properly designed and implemented. Some disadvantages include having to utilize polymer and sand. The coagulation process must be continually monitored to ensure it functions properly and there have been issues with conveying sand/slurry. The process tends to result in additional waste solid accumulation due to polymer and sand addition. The operational and maintenance costs are significantly greater (35% or more) than a conventional four (4) hour sedimentation basin or tube/plate settler only clarifier.

DRAFT

If the existing treatment plant didn't already have an existing rapid mix, flocculation and sedimentation basin, this option may be valid. It is also worth noting that it is not recommended to install a sand-type pretreatment system prior to membrane filtration, as the sand has been documented to quickly destroy the membrane modules. This option should be considered if an entirely new pretreatment system is sought and conventional filtration is used. The total cost estimate of a new actiflo pretreatment process with building enclosure is $3,500,000, which is about $800,000 more than the cost to implement a new conventional sedimentation basin.

B. Filtration

1. Conventional Filtration

The following considers the construction of new conventional filtration process train(s) to replace the outdated filters. Conventional sand/anthracite dual media filters would be designed for a loading rate flow of 4 gpm per square foot of filter area for dual media or multimedia beds. Consideration should also be given to installation of GAC type media; however, the GAC generally requires replacement on a yearly basis. The rates of filtration shall be determined through consideration of such factors as raw water quality, degree of pretreatment, filter media and other factors as may be required by WVBPH. Higher rates must be justified by the design engineer to the satisfaction of WVBPH. Evaluated are the conventional filtration process train designs as follows:

For dual media or multimedia beds at 4 gpm per square foot of filter area. The filters shall be capable of meeting the plant design capacity at the approved filtration rate with one filter removed from service.

With a design flow of 1.26 MGD or 880 gpm per filter and 4 gpm per square foot of filter area, each filter area would be 220 square feet. There would be a total of four (4) filters. Assuming square dimensions for the filters, the required filter bed area is 15 feet x 15 feet. To allow space for tank structures, process piping, pipe galleries and miscellaneous appurtenances, the approximate space required for the four (4) filters is 40 feet x 60 feet. An extensive CMU construction building is proposed to house the cast-in place concrete filter structures, media, underdrains, piping galleries, controls and all miscellaneous appurtenances. A new washwater tank would be needed of adequate size (minimum of 33,000 gallon) to provide backwash water for the proposed conventional filters.

The cost for conventional filtration process train equipment with media, underdrains, piping galleries, controls, electrical, SCADA and all miscellaneous appurtenances for a combined capacity of 3.8 MGD is approximately $2,200,000. The cost for a conventional filtration process train building with cast-in place concrete filter structures, piping galleries, mechanical piping, HVAC, plumbing, electrical, control room, misc. office and/or storage space and all miscellaneous appurtenances is approximately $3,300,000. The total cost for conventional filtration process train equipment and building totals approximately $5,500,000.

DRAFT

The use of conventional filters requires optimized coagulation chemistry at all times to ensure compliance with the turbidity standards. CTUB accomplishes this using periodic jar testing, due to the variability in the source water quality. Conventional filtration requires a larger backwash tank, additional backwash water and filter-to-waste. The current conventional filter backwash operating procedures still require significant operator involvement to ensure proper operation. Recorded filter effluent turbidity spikes are a direct result from backwashing and/or increased filter influent feed water turbidity. The use of membrane filtration would provide submicron particle removal (<0.015 NTU) and would assist in meeting future drinking water regulations. Membrane Systems have specific advantages and disadvantages which have been summarized in the following sections.

In comparison of filtration alternatives, consideration should be provided for membrane filtration due to the overall similar cost for a filtration equipment/building when compared to conventional filtration process units. It's important to note that WVBPH would prefer permitting membrane filtration over conventional filtration due to their proven technology and better water quality. Advantages and disadvantages of treatment system alternatives with membrane filtration will be further discussion in the next section.

2. Membrane Filtration

The use of plate settlers and conventional filters requires optimized coagulation chemistry at all times to ensure compliance with the turbidity standards. The City accomplishes this using periodic jar testing procedures, due to the variability in the source

water quality. The current conventional filter backwash operating procedures are complicated due to old valves and require significant operator involvement. Recorded filter effluent turbidity spikes are a direct result from backwashing and/or increased filter influent feed water turbidity. The use of membrane filtration would provide physical submicron particle removal (<0.015 NTU) and would assist in meeting future drinking water regulations.

a. Membrane System Advantages Over Conventional Filtration

The following are advantages of a membrane filtration system over conventional filtration:

- Membrane filtration consists of a physical barrier, thus optimizing coagulant dosages for filtration is not necessary. The removal of particles above current system capabilities will reduce chlorine demand and will lower DBPs.

- The existing conventional filters are located inside the control building and are open to the atmosphere. This results in high humidity building conditions and large HVAC systems. Pressurized membrane systems are comprised of fully closed vessels on skids, thus there are no open tanks. This reduces condensation, high humidity conditions and resulting corrosion.

DRAFT

- The current filter valves are located in a basement pipe trench which is difficult to access. All the membrane system control valves would be located above grade for easier monitoring and servicing.

- A membrane is an absolute physical barrier which prevents particulate breakthrough unless there is a fiber breach. This is not the case in a conventional filter which relies on water chemistry and addition of coagulants to optimize filtration. Membranes do not require coagulants for proper filtration, this typically results in lower coagulant dosages where less wastewater solids are generated.

- Membranes will reduce TOC on average by 5-10% without coagulation chemicals which aids in lowering the formation of disinfection byproducts. A conventional filter will generally not reduce TOC without coagulation and sometimes they depend on biological activity for TOC removal. Membrane microfiltration is capable of achieving 10-40% TOC reduction through the addition of coagulants prior to the feed water.

- Per GD&F's experience, the average filtrate turbidity of a 0.1 nominal micron membrane system is 0.015 NTU, while the average filtrate turbidity of the existing conventional filters is about 0.03 NTU. This corresponds to twice the particulate removal and in some cases (immediately following a backwash) up to ten times the particulate removal.

- Bacteria in the form of *Cryptosporidium* and *Giardia* do not pass through the membranes. Membrane systems are achieving over 6-log removal of *Cryptosporidium* or 99.9999% per third party validation testing. The average conventional filter is rated for 2.5 log removal of *Cryptosporidium* which is less than one-half the removal of membranes.

- Membranes are rated for 1 to 3-log removal of viruses. Conventional filtration will not effectively remove viruses.

- Membranes do not require an extensive filter-to-waste after a backwash. A membrane system only produces between 1 and 5% waste on average. Conventional filters generally produce between 5 and 10% waste when including the filter-to-waste and filter down-times.

- The overall physical footprint of a membrane filtration unit is generally two-thirds the size of a conventional filter due to the increased flow rate and amount of membrane surface area per module. A single standard module is generally comprised of between 500-800 square feet of membrane area and is only between 6 to 9 inches in diameter and 5 to 7 feet tall.

- Membranes are not affected by change in flow rate, they can go from low flow to maximum flow in seconds and still continuously produce the same filtrate water quality. Change in flow rates of conventional filters can lead to disturbed beds and increased headloss over the filter which can force more particulate through the filter media.

DRAFT

- Through the use of daily sensitive pressure decay testing on each individual membrane module rack, the operators are able to verify the integrity of the membrane system. This fifteen (15) minute pressure hold test verifies if the membrane system module fibers have been compromised by either passing or failing the test. Other than conventional filter effluent turbidimeters and particle counters, there is no way of testing the integrity of a conventional filtration system. There is no way of knowing for sure if contaminants are passing through the filter during backwashing or if an underdrain has failed.

- Membrane systems are easily expandable by simply providing additional modules to the skids or increasing the number of module racks. Conventional filters that feature concrete or steel tanks are not easily expandable and in some circumstances, not expandable at all.

- Membrane filtration will aid the plant in meeting future WVBPH and EPA rules and regulations (particularly lower required filtrate turbidities), whereas the conventional filters may not.

- Membrane filtration should allow the City to lower the coagulant dose, this in turn will result in lower sludge production and less waste solids disposal.

- The WVBPH would much prefer permitting membrane filtration with appropriate pretreatment over conventional filtration due to their proven technology. The Sanitary Survey reports of recent GD&F membrane systems resulted in significantly fewer comments and concerns.

b. Membrane System Disadvantages

The following are disadvantages of a membrane filtration system over conventional filtration:

- Membranes are more expensive than conventional filtration. Given our extensive experience with membrane filtration water treatment facilities, they cost on average 10-20% more than it would cost to construct a new conventional treatment facility.

- The expected life of the membrane module is 10-15 years, thus future membrane module replacement costs should be included in budgeted yearly operation and maintenance (O&M) expenses.

DRAFT

- Membranes require pressure for filtration (typically 5 to 20 psi) which leads to additional power consumption. No pressure filtration is required for conventional filters, but this is offset by backwash pumps that are much larger and expensive to operate.

- Membranes require chemical cleaning and neutralization of cleaning chemicals whereas conventional filtration does not. Costs for these cleaning/neutralizing chemicals, heating of cleaning water and pumping is required as part of the membrane system chemical cleaning process which results in increased plant O&M costs.

- Additional operator training and WVBPH reporting is necessary to fully operate a membrane filtration treatment facility.

c. Common Membrane Filtration Misconceptions

- Membrane filtration will not effectively reduce TOC alone. They will remove 5-10% without coagulation and up to 40% with coagulation.

- All membrane modules are not created equal. GDF currently only specifies membrane modules which are manufactured using the Thermally Induced Phase Separation (TIPS) process. This is a 2-step

process in which a more durable, permeable and longer lasting module is constructed. Current modules as manufactured by General Electric (GE), Memcor and DOW are not currently manufactured via the TIPS process.

- Except for reverse osmosis and nanofiltration, membranes have no affect on alkalinity, conductivity, hardness, total dissolved solids, nitrate or sulfate, among others. For water hardness greater than 250 mg/L calcium carbonate, the CIP potable water supply must be provided with a softener.

- Pre-treatment is vital in proper operation of a membrane system. Pre-treatment, such as an effective flocculation and sedimentation system, significantly reduces the solids loading on a membrane which results in less power consumption, lower chemical cleaning costs and longer membrane module life.

- Metals such as iron, manganese and aluminum will only be removed via membrane filtration if they are properly oxidized. If they are in the reduced state, they will pass through the membrane filters.

d. Membrane Filtration Design

DRAFT

A new control building would be needed to house the membrane filtration equipment. This proposed building would consist of a concrete slab-on-grade structure with CMU masonry and veneer wall construction with precast concrete columns and roof support system. The proposed location of this new building is northeast of the existing Water Treatment Plant. A more thorough feasibility study is suggested for appropriate sizing and location of the proposed facility, should this option be pursued.

The membrane system would consist of the following preliminary components. Refer to Appendix C which include a proposal and preliminary drawings of a new membrane filtration system by Pall Corporation.

- Three (3) AP8 Units each consisting of the following components: PLC with HMI, 2,300 gallon feed tank and backwash tank, feed and backwash pumps and VFDs, 300 micron automatic backwashing pre-strainer, valve/instrumentation rack and 98 membrane module rack.

- The following membrane system accessories would be provided: 2,500 gallon CIP tank with immersion heater, CIP duplex pump skid, 15,000 gallon neutralization system, four (4) chemical feed assemblies featuring citric acid, caustic soda, sodium hypochlorite and sodium bisulfite, two (2) air compressor/dryers and one air receiver tank, Master Control Panel, SCADA and flat panel PC and additional off-skid inputs, outputs and instrumentation.

e. Membrane Cost Estimate

The budgetary cost estimate for a new installed 3.8 MGD membrane filtration system sized at approximately 40 GFD (gallons per day per square foot of membrane area) is $3.2 million. The cost to construct a new WTP building to house the equipment is $2,500,000, taking the total cost of the membrane filtration system to $5,700,000. Refer to Appendix C for a budgetary cost estimate, scope and drawings from Pall Corporation.

f. Membrane System O&M

Operation of a membrane system is more complex than conventional filtration, due to additional instrumentation, equipment and valves. However, the membrane system is fully automatic and generally only require weekly CIP chemical feed tank refills, unless there is a mechanical equipment failure. The largest expense in operating a membrane system is the future cost of replacement modules. It is estimated that there would be a total of 294 Pall modules on this project. Assuming a ten-year module life at $3,000 per replacement module, yields $88,200 per year or $7,350 per month required in savings to account for a full-scale module replacement. Estimated membrane system chemical cleaning costs can be derived following a successful pilot study and are estimated at around $25,000 per year.

DRAFT

g. Membrane Pilot Study

The City would be required to conduct a minimum 3-month membrane filtration pilot study to demonstrate the effectiveness of the membrane filtration system and to evaluate water quality data, flux rates and cleaning cycles. A pilot study protocol report must be submitted to WVBPH prior to conducting the study. A final report must then be submitted and approved by the Department following the study. A three (3) month pilot study with one (1) membrane manufacturer generally costs about $50,000.

3. UV Disinfection

Ultraviolet disinfection provides an additional barrier to microbial pathogens in the finish water supply. USEPA considers UV disinfection as an "available technology" to deactivate *Cryptosporidium* under the USEPA Long Term 2 Enhanced Surface Water Treatment Rule. Depending on the future "Bin Classification" of the City's water supply for *Cryptosporidium* sampling (oocysts/liter), a log inactivation credit can be applied if UV disinfection is utilized and validated. UV disinfection can provide 3-log *Cryptosporidium* and 3-log *Giardia* inactivation.

Ultraviolet (UV) disinfection can be used as an additional treatment barrier following membrane filtration. Ultraviolet disinfection of water consists of a purely physical, chemical-free process. UV disinfection uses a UV light source, which is enclosed in a

transparent protective quartz sleeve. It is mounted so that water can pass through a flow chamber and UV rays are emitted and absorbed into the stream. When ultraviolet energy is absorbed by the reproductive mechanisms of bacteria and viruses, the genetic material (DNA/RNA) is rearranged so they can no longer reproduce. They are therefore considered "dead" and the risk of disease has been eliminated. UV disinfects water without adding chemicals and does not create new chemical complexes. Also, UV does not change the taste or odor of the water, nor remove beneficial minerals.

The UV process is cost effective, does not use chemicals and may reduce post-filtration chlorine demand. Reduced chlorine usage will reduce the formation of disinfection by-products and further aid in the City's compliance with the Stage 2 Disinfection Byproducts Rule (DBR2).

Two (2) UV reactor vessels can be designed for a maximum flow rate of 3.8 MGD (each) with a UV design dose of 40 mJ/cm^2 at a UV transmittance (253.7 nm) of 95%. Total estimated construction cost for a complete UV disinfection system including piping is $400,000. Estimated monthly O&M to operate a 3.8 MGD UV system is $400/month, which includes bulb and ballast replacements only. Due to the overall small size of the UV system, additional building space required to house the equipment would be minimal.

4. Granular Activated Carbon (GAC) Filtration

DRAFT

A primary concern with the existing facility is the inability to effectively reduce TOC. The use of GAC will allow the City to eliminate ammonia addition and will result in lower DBPs.

One option is the implementation of granular activated carbon (GAC) filtration following conventional or membrane filtration. The GAC system can remove TOC and organic contaminants such as various endocrine disrupters, pharmaceuticals and personal care products down to a non-detectable level. GAC works through adsorption generally via coconut carbon based media. Average hydraulic loading rates are 6-10 gpm/ft^2 with an average empty bed contact time of 7-10 minutes. A 12-foot diameter, 40,000 pound vessel can filter at a maximum flow rate of 1,100 GPM. They operate as fixed beds in series or in lead/lag type configurations.

When the activated carbon becomes saturated (exhausted) the system it is taken off-line for replacement of the spent carbon. This can be every few months or years depending on the TOC loading and break-through rates. The GAC vessels can also be retrofitted to accommodate specific resins which will remove emerging contaminants such as Polyfluoroalkyl Substances (PFAS), 1-4, dioxane and hexavalent chromium. The implementation of this alternative alone would likely alleviate the DBP exceedances. It would also place the plant in better position to be in compliance with future regulations of organic contaminants which are currently being monitored via EPA's Unregulated Contaminant Monitoring Rules (UCMR's).

The total cost for six (6) 40,000 pound vessels with appurtenances and valve rack is estimated at $1.70 million.

The effectiveness of TOC removal is best tested via a pilot study, which could be in conjunction with a membrane filtration pilot study. The total estimated cost of a 3-month GAC system pilot rental and testing is $30,000.

It costs about $75,000 per carbon bed exchange of a 40,000 pound vessel. Estimated organic break-through can be calculated via a pilot study, if break-through occurs during the study. Refer to Appendix D for GAC system data sheets from Calgon Carbon Corporation and a drawing of a 40,000 pound modular adsorption system.

5. Ozone

Ozone gas is considered to be the optimal disinfectant and oxidant. It is typically injected into the raw water as pretreatment for various metals such as iron, manganese and aluminum and taste, odor and algae control. It can also be used as a means of disinfection; however, is very expensive to implement.

The capital and operating costs of ozone generators, air dryers, contactor tanks, diffusers, destructors and monitoring instrumentation are high, requiring extensive space and maintenance. O&M costs are also high due to the required equipment and electrical cost for ozone gas generation. The use of ozone gas at the CTUB Facility is neither recommended nor desired.

DRAFT

6. Advanced Oxidation Processes (AOP)

Advanced oxidation processes in the water treatment industry typically either combining hydrogen peroxide with UV or ozone with peroxone for taste and odor control and also removal of organic contaminants. These processes form chemical reactions (hydroxyl radicals) very quickly and require little detention time. They also can remove a plethora of emerging organic contaminants such as 1-4 dioxane. They also do not generate any solid residuals. The disadvantages are a limited track record, significant capital and O&M costs, radical and sometimes unpredictable chemical reactions and removal of hydrogen peroxide residuals after the reaction process. While this new technology is not yet warranted for use by CTUB, installation of a UV disinfection system may enable a future AOP system to be installed if necessary.

Section 6
COST ESTIMATES AND SCHEDULE

A. Cost Estimate Summary

The following section includes a list of proposed improvements to the intake and water treatment plant along with their associated cost estimates. The total construction cost estimate for the development of new well/spring sources and the raw water intake system improvements is $2,745,000. The total construction cost estimate for the new water treatment plant upgrades is $17,505,000. The total project cost estimate is $24,880,000. Refer to the tables below.

Table 5: Recommended Source Development and Intake Projects Construction Cost Estimate

Item	TASK ELEMENT	ESTIMATED COST
1.	Hydrogeological Well/Spring Pump and Water Quality Testing	$80,000
2.a	New Well Development at S. George Street	$150,000
2.b	New Well Line from S. George Street to WTP	$700,000
3.a	New Well/Spring Development at Wydmyer's	$250,000
3.b	New Well Line from Wydmyer's to WTP	$300,000
4.	New 20" DIP Intake Line and 3" Air Line	$250,000
5.	New T-Screen	$50,000
6.	New Stream Concrete Debris Deflector	$750,000
7.	New Automated Air Burst System	$100,000
8.	New Wet Well Level Sensor	$5,000
9.	New 125 HP Intake Pump Motors	$50,000
10.	Intake Telemetry System	$60,000
	TOTAL INTAKE/SOURCE CONSTRUCTION COST ESTIMATE:	**$2,745,000**

DRAFT

Table 6: Recommended WTP Projects Construction Cost Estimate

Item	TASK ELEMENT	ESTIMATED COST
1.	New Plant Site Piping	$1,000,000
2.	New Plant Site Work	$1,250,000
3.	New WTP Building (Foundation, Walls and Roof)	$2,500,000
4.	New Concrete Flocculation and Sedimentation Basin	$2,200,000
5.	Flocculation and Sedimentation Basin Equipment	$400,000
6.	New Sludge and Meter Vault	$100,000
7.	Interior Plant Piping	$750,000
8.	Plant Instrumentation	$200,000
9.	Plant Interior Rooms and Finishes	$700,000

Item	TASK ELEMENT	ESTIMATED COST
10.	HVAC/Plumbing	$400,000
11.	Electrical	$1,500,000
12.	Membrane System Pilot Study	$50,000
13.	3.8 MGD Membrane System Microfiltration Equipment	$3,200,000
14.	UV Disinfection Equipment	$400,000
15.	GAC System Pilot Study	$30,000
16.	3.0 MGD GAC System	$1,700,000
17.	Chemical Feed Equipment	$350,000
18.	Add Clearwell Baffle Wall	$75,000
19.	Process Waste Pump Station and Forcemain to Development	$350,000
20.	Laboratory Instrumentation and Casework	$150,000
21.	SCADA System	$200,000
	TOTAL WTP CONSTRUCTION COST ESTIMATE:	**$17,505,000**

Table 7: Recommended Total Project Cost Estimate

Item	TASK ELEMENT	ESTIMATED COST
1.	Total Well/Spring Source Construction Cost	$1,480,000
2.	Total Intake Construction Cost	$1,265,000
3.	Total WTP Construction Cost	$17,505,000
4.	Construction Contingency (+/-10%)	$2,000,000
5.	Engineering Fees (+/-12%)	$2,400,000
6.	Legal Fees	$20,000
7.	Permits and Fees	$10,000
8.	Misc. (Admin., Financing, Interest, Cost Index, etc.)	$200,000
	TOTAL PROJECT COST ESTIMATE:	**$24,880,000**

DRAFT

B. Proposed Project Schedule

There are various small projects that are required to keep the existing treatment facility operational and in compliance until the new WTP is constructed. These projects consist of installing the newly purchased VFDs for the vertical turbine raw water intake pumps, replacing filter system valves and instrumentation and performing gas chlorine room upgrades. These are all scheduled to take place in 2022. The development of new groundwater/spring sources is currently ongoing, with well drilling/testing, easements and construction expected through 2023. Installation of a new process wastewater pump station and forcemain tying into the existing CTUB sewer system is recommended ASAP, thus eliminating recycle. There are currently plans for a new potential development to occur near the existing water treatment facility site, which may allow tie-in of the WTP process wastewater in the near future. Based on the projected growth and anticipated water demands, the plans for an expansion project should start no later than 2026 to ensure adequate supply by the projected year of 2036. Refer to Table 8 for a recommended project schedule.

Table 8: Recommended Project Schedule

Task	Date
Perform Existing Chlorine Room and Filter Valve Upgrades	2022
Install New VFDs on Existing Intake Pumps	2022
Develop New Well/Spring Sources	2022-2023
Perform Membrane/GAC Pilot Study	2026
Design Intake and WTP Upgrades	2027-2028
Bid Project-Start Construction-Secure Funding	2029
Final Completion of Construction - New Plant Online	2032

DRAFT

APPENDIX A

INTAKE SCREEN CONCRETE DEBRIS DEFLECTOR DRAWING

DRAFT

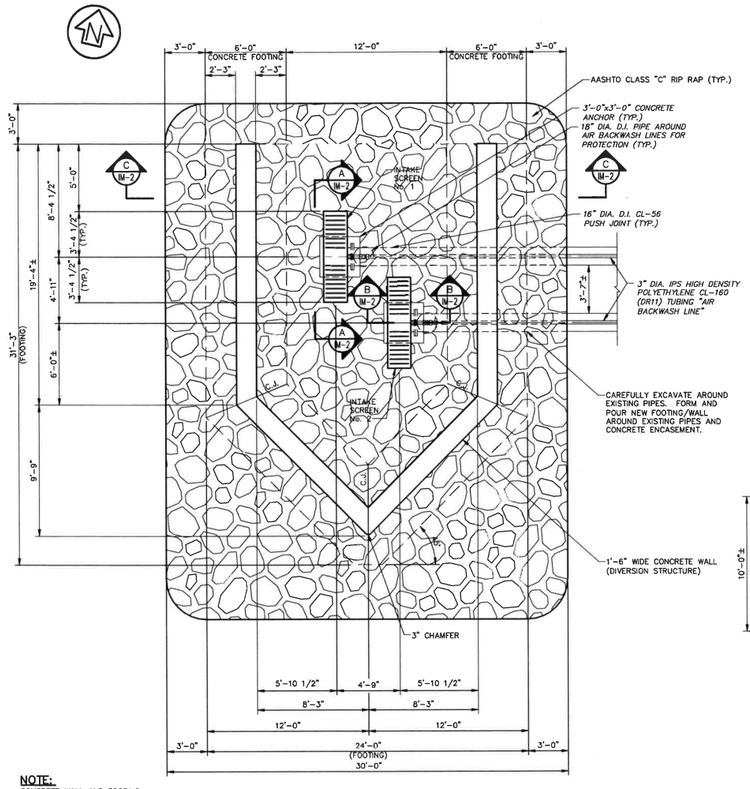

NOTE:
CONCRETE WALL AND FOOTING MAY BE PRECAST AND INSTALLED IN SEGMENTS USING EPOXY AND DOWELS.

RAW WATER INTAKE AND DIVERSION STRUCTURE SCREEN PLAN
SCALE: 1/4" = 1'-0"

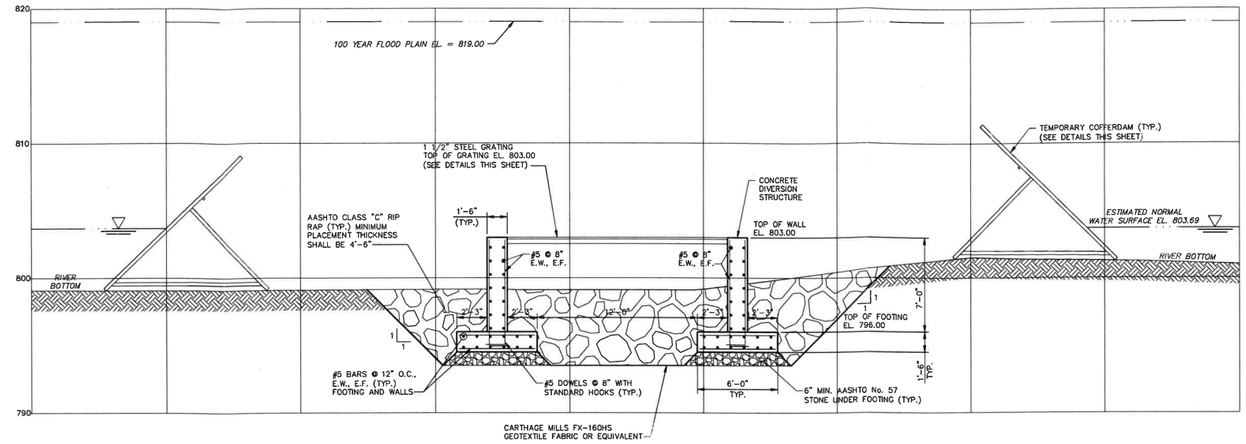

SECTION C-C – IM-2
SCALE: 1/4" = 1'-0"

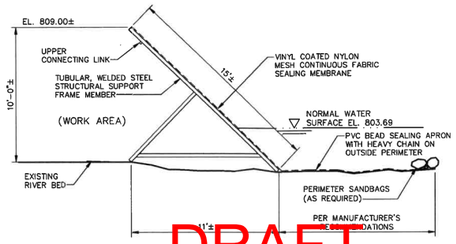

COFFERDAM STRUCTURAL SUPPORT FRAME AND MEMBRANE SEALING DETAIL
SCALE: 1/4" = 1'-0"

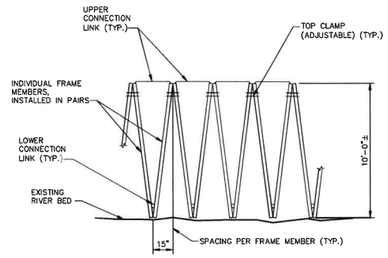

COFFERDAM FRAME ASSEMBLY DETAIL
SCALE: 1/4" = 1'-0"

COFFERDAM NOTES:
1. TEMPORARY COFFERDAM MANUFACTURER SHALL BE PORTADAM, INC., 3082 SOUTH BLACK HORSE PIKE, WILLIAMSTOWN, NEW JERSEY 08094, OR APPROVED EQUAL.
2. SANDBAGS SHALL BE POLY-WOVEN BAGS FILLED WITH CLEAN SAND.
3. EVALUATE FOUNDATION FOR LOAD BEARING CAPACITY BEFORE INSTALLATION, BASED ON ANTICIPATED HYDROSTATIC LOADING.
4. PREPARE RIVER BED SURFACES IN ACCORDANCE WITH MANUFACTURER'S INSTRUCTIONS AND SPECIFICATIONS.
5. CLEAR ROCKS, DEBRIS AND OBSTRUCTIONS FROM PROPOSED PVC BED SEALING APRON LOCATION.
6. LOCATE MINOR LEAKS UNDER PVC BED SEALING APRON AND SEAL WITH SANDBAGS.
7. PROVIDE THE FOLLOWING ATTACHMENTS AS REQUIRED, AT NO ADDITIONAL COST:
   - BACK BRACE POLE
   - HORIZONTAL ADDITIONAL BRACING
   - SINGLE FRAME ATTACHMENTS FOR IRREGULAR CONTOURS AND TURNS.
8. ANCHOR BOLTS MAY BE REQUIRED, AT NO ADDITIONAL COST, ON HARD ROCK, FLAT OR CONCRETE SURFACES, PER MANUFACTURERS RECOMMENDATIONS.
9. ALL STRUCTURAL SUPPORT FRAME JOINTS SHALL BE WELDED.
10. THE RELATIVE DIMENSIONS OF THE TEMPORARY COFFERDAM PROTECTION WORK AREA ARE PROVIDED FOR INFORMATIONAL PURPOSES. CONTRACTOR IS REQUIRED TO REMAIN WITHIN THE LIMIT OF DISTURBANCE PER THE SITE PLAN.
11. CONTRACTOR SHALL ADJUST COFFERDAM AREA AS REQUIRED TO FACILITATE CONSTRUCTION OPERATIONS.
12. CONTRACTOR IS FULLY RESPONSIBLE FOR HEIGHT AND PROTECTION OF COFFERDAM.

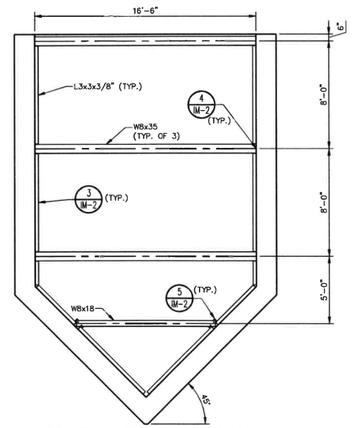

GRATING SUPPORT PLAN
SCALE: 1/4" = 1'-0"

GRATING NOTES:
1. ALL STAINLESS STEEL COMPONENTS OF THE GRATING AND SUPPORTS SHALL ADHERE TO ASTM A276.
2. GRATING SHALL BE DESIGNED FOR A 100 P.S.F. LIVE LOAD.
3. GRATING SHALL BE SECURELY FASTENED TO SUPPORTS USING 3/8" DIA. STAINLESS STEEL ANCHORS EVERY 2'-0" O.C.
4. GRATING SHALL BE FULLY BANDED AROUND PERIMETER.
5. CONTRACTOR TO VERIFY BEAM AND INTAKE CLEARANCE.

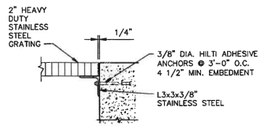

DETAIL 3 – IM-2
SCALE: 1 1/2" = 1'-0"

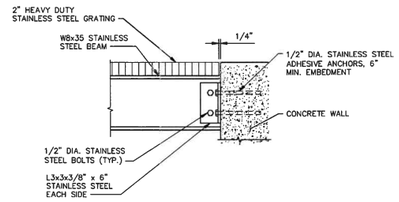

DETAIL 4 – IM-2
SCALE: 1 1/2" = 1'-0"

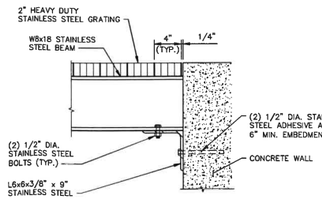

DETAIL 5 – IM-2
SCALE: 1 1/2" = 1'-0"

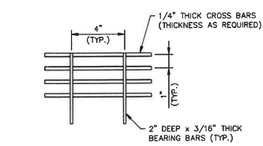

STAINLESS STEEL GRATING DETAIL
SCALE: 3" = 1'-0"

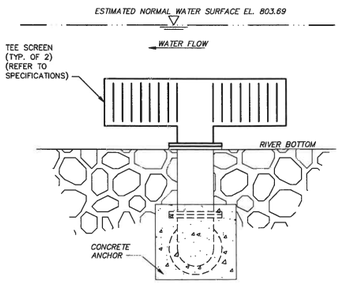

SECTION A–A – IM-2
SCALE: 1/2" = 1'-0"

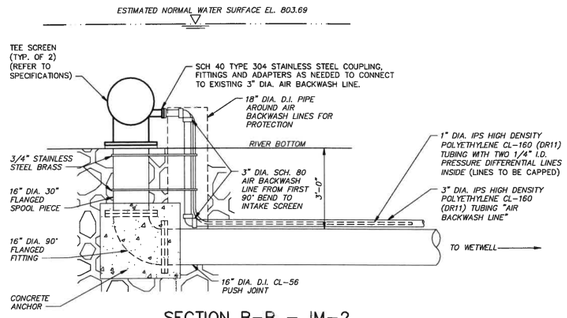

SECTION B–B – IM-2
SCALE: 1/2" = 1'-0"

NO.	DATE	DESCRIPTION
		REVISIONS

INTAKE CONCRETE DEBRIS DEFLECTOR PLANS AND DETAILS

CHARLES TOWN UTILITY BOARD

WATER TREATMENT FACILITY UPGRADE AND EXPANSION

JEFFERSON COUNTY, WEST VIRGINIA

SEAL

DATE: 1/28/22	JOB: 21045	SCALE: AS SHOWN
FILE: IM-2	DRAWN BY: RJB	CHECKED BY: CWE

GD&F GWIN DOBSON & FOREMAN ENGINEERS
3121 Fairway Drive
Altoona, PA 16602
814.949.8214
gdfengineers.com

SHEET NO: IM-2

PLOT CHECKED: 1/27/2022 3:58 PM

© 21045\IM-2

DRAFT

APPENDIX B

TYPICAL NEW FLOCCULATION AND SEDIMENTATION DRAWINGS

DRAFT

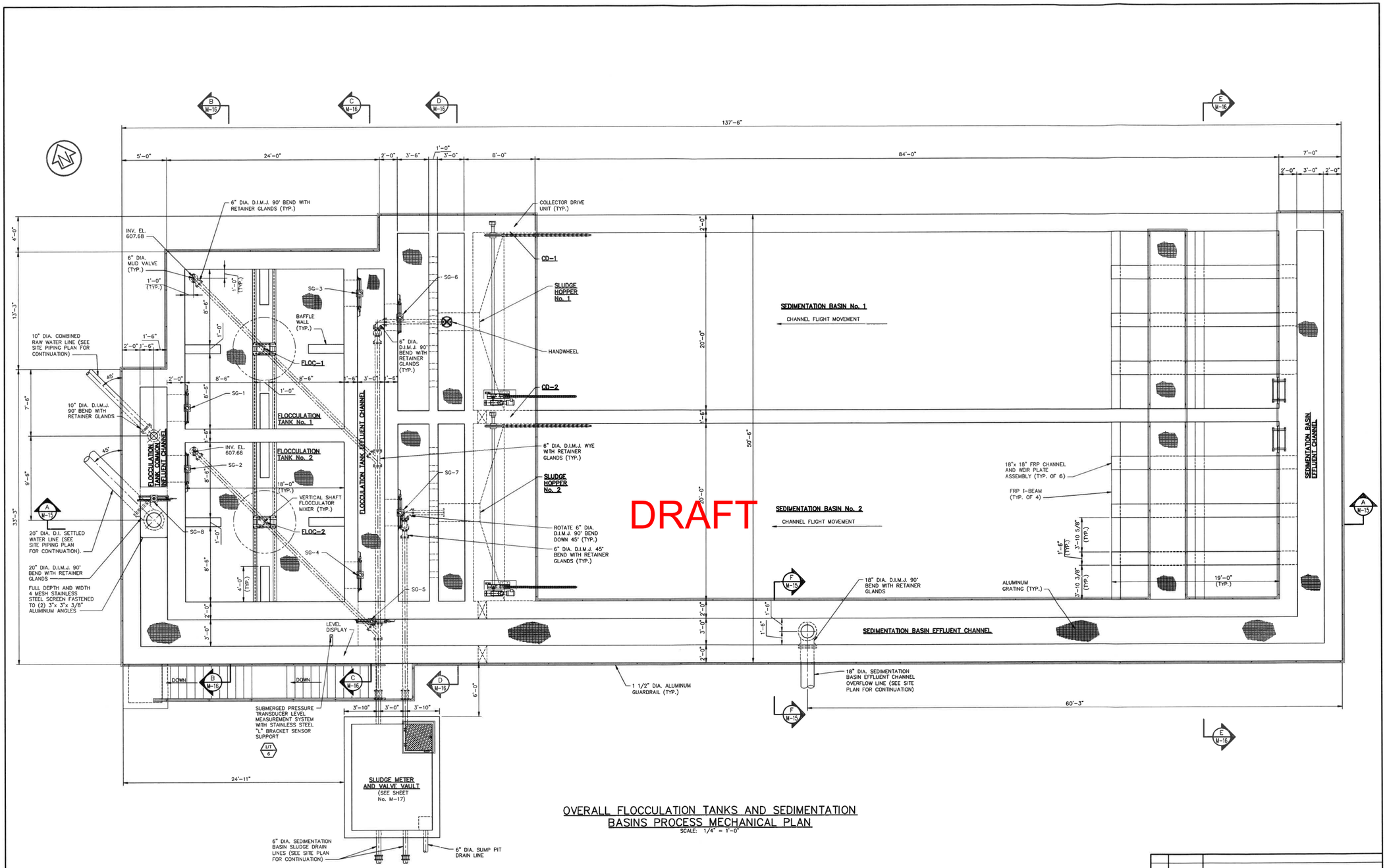

OVERALL FLOCCULATION TANKS AND SEDIMENTATION BASINS PROCESS MECHANICAL PLAN
SCALE: 1/4" = 1'-0"

LEGEND

INDICATES INSTRUMENTATION DEVICE

SG-# SLIDE GATE

NO.	DATE	DESCRIPTION
		REVISIONS

OVERALL FLOCCULATION TANKS AND SEDIMENTATION BASINS PROCESS MECHANICAL PLAN

CHARLES TOWN UTILITY BOARD

WATER TREATMENT FACILITY UPGRADE AND EXPANSION

JEFFERSON COUNTY, WEST VIRGINIA

SEAL

GWIN DODSON & FOREMAN ENGINEERS
3121 Fairway Drive
Altoona, PA 16602
814.943.5214
gdfengineers.com

DATE:	1/28/22	JOB:	21045	SCALE:	AS SHOWN
FILE:	M-14	DRAWN BY:	RJB	CHECKED BY:	CME

SHEET NO: M-14

© GWIN DODSON & FOREMAN

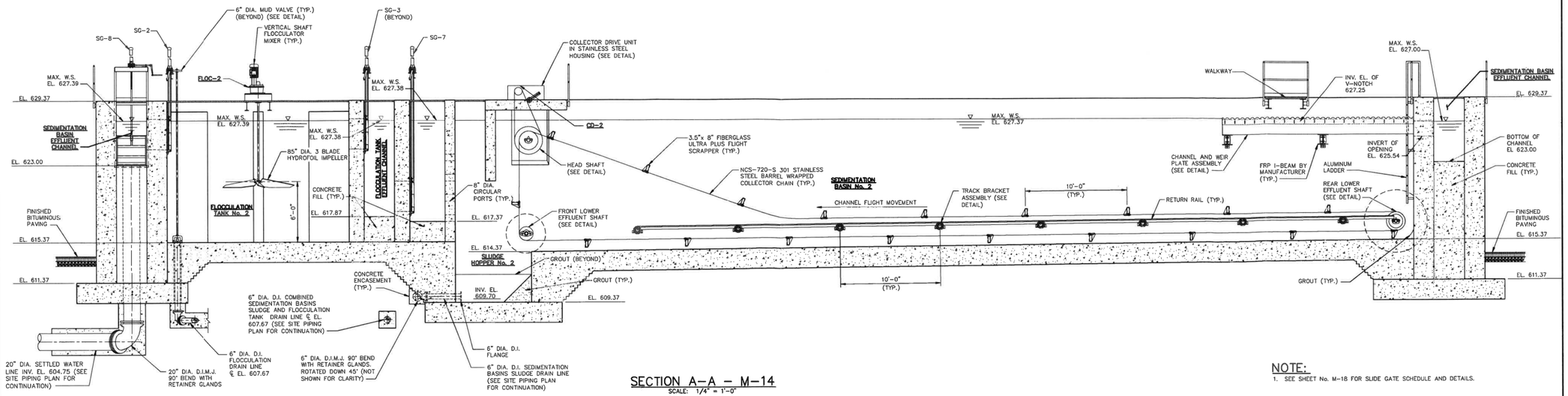

SECTION A-A – M-14
SCALE: 1/4" = 1'-0"

NOTE:
1. SEE SHEET No. M-18 FOR SLIDE GATE SCHEDULE AND DETAILS.

LEGEND

SG-# SLIDE GATE

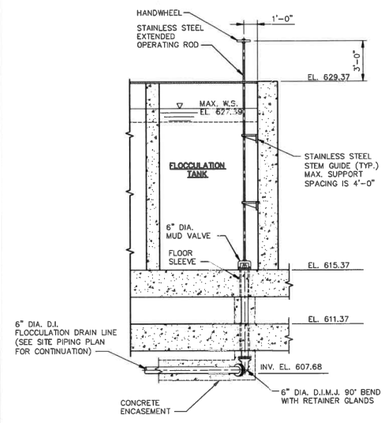

MUD VALVE DETAIL
SCALE: 1/4" = 1'-0"

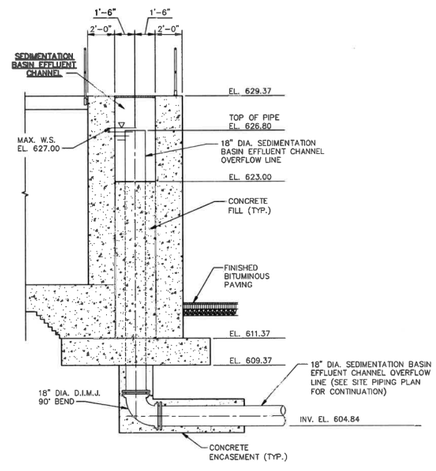

SECTION F-F – M-14
SCALE: 1/4" = 1'-0"

DRAFT

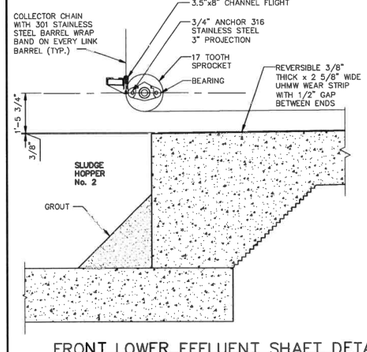

FRONT LOWER EFFLUENT SHAFT DETAIL
SCALE: 1/2" = 1'-0"

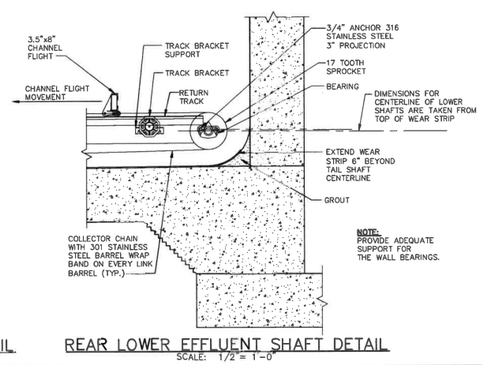

REAR LOWER EFFLUENT SHAFT DETAIL
SCALE: 1/2" = 1'-0"

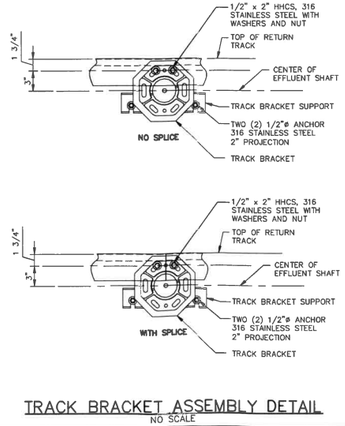

TRACK BRACKET ASSEMBLY DETAIL
NO SCALE

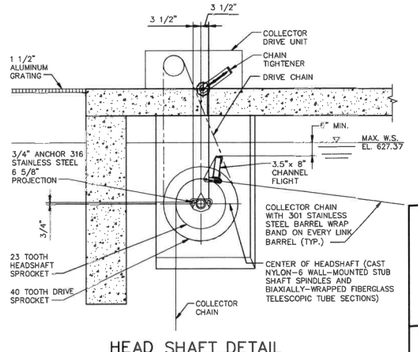

HEAD SHAFT DETAIL
SCALE: 1/2" = 1'-0"

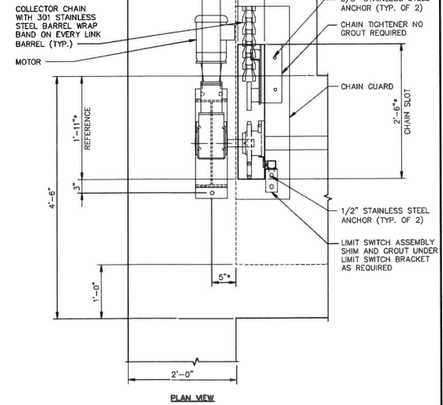

COLLECTOR DRIVE UNIT DETAIL
SCALE: 1" = 1'-0"

NOTES:
1. CONTRACTOR TO VERIFY LENGTH AND TOOLS NEEDED TO INSTALL CHAINS WITH EQUIPMENT MANUFACTURER.
2. * DENOTES GENERAL DIMENSION, CONFORM DIMENSIONS WITH EQUIPMENT MANUFACTURER.
3. CONTRACTOR TO VERIFY TYPE, LENGTH, AND TORQUE REQUIREMENTS WITH EQUIPMENT MANUFACTURER.
4. FOR COMPLETE LIST OF PARTS AND INSTALLATION INSTRUCTIONS, CONTACT EQUIPMENT MANUFACTURER.

NO.	DATE	DESCRIPTION
		REVISIONS

FLOCCULATION TANKS AND SEDIMENTATION BASINS PROCESS MECHANICAL SECTIONS

CHARLES TOWN UTILITY BOARD

WATER TREATMENT FACILITY UPGRADE AND EXPANSION

JEFFERSON COUNTY, WEST VIRGINIA

SEAL

GD&F
GWIN DOBSON & FOREMAN ENGINEERS
3121 Fairway Drive
Altoona, PA 16602
814.943.5214
gdfengineers.com

DATE:	1/28/22	JOB:	21045	SCALE: AS SHOWN
FILE:	M-15	DRAWN BY:	RJB	CHECKED BY: CME

SHEET NO: M-15

APPENDIX C

PALL CORPORATION BUDGETARY MEMBRANE SYSTEM PROPOSAL AND PRELIMINARY DRAWINGS

DRAFT

Budgetary Proposal for a Pall ARIA™ Membrane Filtration System

Charles Town Utility Board, W.Va

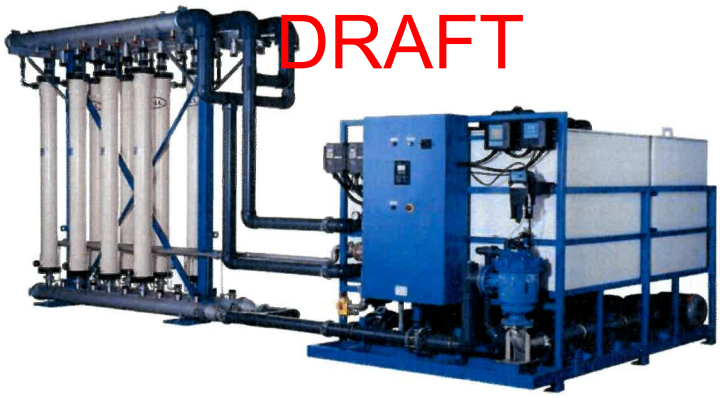

1/24/2022
Proposal #: 20220124-0-B

Confidential - Company Proprietary

PALL Water

Submitted to:

Christopher Eckenrode, P.E.
Gwin, Dobson & Foreman, Inc.
3121 Fairway Drive
Altoona, PA 16602

Submitted by:

Dave Glovinsky
Regional Sales Manager
516-924-2041
dave_glovinsky@pall.com

DRAFT

PALL Water

PROPRIETARY & CONFIDENTIAL
INFORMATION NOTICE

This proposal document is proprietary to Pall Corporation and is furnished in confidence solely for use in evaluating the proposal and for no other direct or indirect use. No rights are granted to the recipient for any information disclosed in this proposal. It contains proprietary information which may be the subject of an issued patent or pending application in the United States or elsewhere. By accepting this document from Pall Corporation the recipient agrees:

- to use this document and the information it contains exclusively for the above-stated purpose and to avoid use of the information for performance of the proposed work by recipient itself or any third party.

- to avoid publication or other disclosure of this document or the information it contains to any third party without the prior approval of Pall Corporation.

- to make only those copies needed for recipient's internal review, and

- to return this document and any copies thereof when they are no longer needed for the purpose for which furnished or upon the request of Pall Corporation.

DRAFT

Table of Contents

1. Pall Offering
   1.1 Scope Summary
   1.2 Pricing Summary
   1.3 Delivery Schedule
   1.4 Terms and Conditions

2. Scope of Supply
   2.1 Scope Summary Table
   2.2 Equipment Description
   2.3 Submittal Description
   2.4 Services and Labor

3. Technical Summary
   3.1 Process Summary
   3.2 Treated Water Objectives
   3.3 Operational Parameters
   3.4 Acceptance Criteria

The following information can be provided upon request
   Warranty
   Overview of Pall Corporation
   Hollow Fiber Membrane System Overview
   Pall Standard Terms and Conditions

DRAFT

1 Pall Offering

1.1 Scope Summary

To evaluate the use of hollow-fiber membranes on this drinking water source

1.2 Pricing Summary

Item	Description	Sale Price (US)
1	Aria™ Membrane Filtration System (Details Per Section 2)	$2,861,500

1.3 Delivery Schedule

Typically 4 weeks after Acknowledgement of Purchase Order

The schedule provided is Pall's standard and reflects typical project execution. If requested, we would be happy to review customer schedule requirements and adjust where possible to accommodate project specific needs.

	Milestone	Typical Schedule
1	Acknowledgement of Purchase Order	Typically 1 to 2 weeks after Receipt of Purchase Order
2	Submittals/Shop Drawings	Typically 7 weeks after Acknowledgement of Purchase Order
3	Commence Manufacturing1	Typically 2 weeks after Submittals/Shop Drawings submitted
4	Equipment Ready to Ship and Preliminary O&M Manual	Typically 27 - 31 weeks after Commence Manufacturing
5	Installation Completed (by Others)	Variable
6	Commissioning Complete/Final Acceptance	Approximately 6 weeks after Installation Completed

DRAFT

Note 1: For standard equipment, manufacturing may commence order acknowledgement. The schedule above assumes standard equipment and standard submittals.

1.4 Terms and Conditions

All sales made by Pall are subject to the terms contained within this Section 1.4 and *Additional Terms and Conditions of Sale of Systems and Made to Order Goods – The Americas* (Available upon request).

Price Validity	This proposal is for discussion purposes only, does not constitute a binding agreement on either party, and remains subject to corporate approval by both parties. The information contained herein is deemed confidential and is not to be shared with any third party.
Shipping Terms	The price does not include shipping costs. Delivery shall be FCA Seller's Shipping Point, INCOTERMS® 2010.
Payment Terms	Payment of invoiced amounts due to Seller shall be paid Net 30 days and as further defined in *Additional Terms and Conditions of Sale Systems and Made to Order Goods – The Americas*.
Bonds	No bonds of any type are included with this proposal.
Taxes	No taxes are included in the pricing. Payment of all Taxes related to the Goods and Services proposed shall be the exclusive responsibility of the Buyer as further defined in *Additional Terms and Conditions of Sale Systems and Made to Order Goods – The Americas*.

DRAFT

2 Scope of Supply

2.1 Scope Summary Table

Item Description	By PALL	By OTHERS
(1) Master Control Panel with Allen Bradley Logix PLC, or equal	X	
Design and supply of systems prior to membrane filtration system.		X
Feed Tank Included as part of AP Skid	X	
Feed Pump(s) and VFD(s) included as part of AP skid	X	
Feed Strainer included as part of AP Skid	X	
3 (2 + 1) AP8 Units, each factory assembled and tested unit including valves, instruments & I/O required for operation	X	
Each AP Unit will include a 102 space membrane module rack for on-site assembly and (98) hollow fiber membrane modules	X	
RF Tank Included as part of AP Skid	X	
RF Pump(s) included as part of AP Skid	X	
(1) 2500 gallon CIP System factory assembled and tested prior to shipment with valves, instruments, pumps, tank, heater as needed for operation	X	
(1) 15000 gallon Neutralization System factory assembled per the P&ID and tested prior to shipment:	X	
(2) Air Compressors (1) Air Receiver	X	
Chemical Storage Equipment		X
Supply of any required chemicals		X
Design and supply of anchor bolts for Pall supplied Equipment		X
Receiving, unloading and safe storage of equipment until ready for installation		X
Installation of all equipment		X
Design and supply of interconnecting pipe, inclusive of pipe supports and flexible connectors		X
Motor Control Center (MCC)		X
All wiring, cabling, and tubing for power supply, signals, communications, and to connections on Pall supplied equipment		X
Design, supply, and installation of all civil infrastructure inclusive of buildings, fire and safety protection, HVAC, walkways, platforms, etc.		X
All Permits		X

DRAFT

2.3 Submittal Description

The project schedule is based on submittals/shop drawings provided in electronic format via a secure FTP site for information only. This allows work to proceed on the project without a document approval process.

Submittals/Shop Drawings
P&ID
General Arrangement Drawings for Pall-Supplied Equipment
Electrical Interconnect Drawing (Power One-Line, I/O Interconnection, and Network Layout)
Electrical Drawings for Pall-Supplied Panels
Mechanical Replacement Parts List
Electrical Replacement Parts List
Compressed Air System Information
Installation Manual
Cutsheets for Pall-Supplied Off-Skid Components
Installation & Startup Checklist
Final Submittal (provided at completion of commissioning)
Operation and Maintenance Manual
Software License Transfer Documentation

DRAFT

2.4 Services and Labor

Commissioning & Training time is estimated to be 5 man-weeks. Training activities occur during the commissioning process.

Commissioning

Each day shall be considered 8 hours on site. Commissioning will begin once the system is fully installed. A commissioning Checklist is prepared specifically for each project during project execution. Commissioning shall consist of the activities outlined in the project specific Commissioning Checklist. Commissioning activities include:

- Confirmation of network communications
- Confirmation that I/O is connected to the control system
- Confirmation of MF System functionality (components are functioning and control system sequences are functional)
- Startup and tuning of Pall controls

Operator Training

Operator training is estimated to take 1 to 3 days depending on system complexity. Training is provided on-site by a Pall Field Service Engineer. The estimated time assumes that all staff are trained at the same time. Training time will be split between a classroom presentation and hands-on training with the equipment.

DRAFT

3 Technical Summary

3.1 Process Summary

Source Description:

Blended Source (Shenandoah River & Well Sources)

Treatment processes prior to Membrane Filtration System:

coagulation & direction filtration

Membrane System Feed Water Characteristics

Quality of the water entering the Pall Membrane Filtration System as summarized in table below forms the basis of design for this proposal. In the event that the feed water to the membrane filtration system is outside these parameters the system performance, cleaning protocol, operating parameters, and/or warranties may be affected.

Parameter	Units	Range
Turbidity	NTU	5-50
TOC	ppm	3-6
Hardness	ppm	50-350
Alkalinity	ppm	60-320
TSS	ppm	10-100
Fe	ppm	<2.0
Mn	ppm	<1.0

Notes:

1 – Assumed Water Quality is based on typical water quality for similar source waters. The design parameters may change after review of actual source water quality data.

DRAFT

3.2 Treated Water Objectives

The proposed membrane system is designed to achieve the following results given the feed fluid conditions described in Section 3.1 of this proposal and operation of the system in accordance with the operation and maintenance manual.

Net Filtrate Capacity of 3.8 MGD

Turbidity less than 0.10 NTU 95% of the time, below 0.20 NTU at all times.

The membrane system shall produce effluent with Silt Density Index (SDI) value of 2.5 or less in 95% of samples using ASTM 4189-95 and a Pall nylon test membrane.

3.3 Operational Parameters

Hollow Fiber Membrane System operational parameters at design flow		
Net Filtrate Capacity	3.800	MGD
Recovery	97.0%	%
Instantaneous Flux	40	GFD
FM (Backwash) Interval	35	Minutes
EFM Interval	7	Day(s)
CIP Interval	30	Days

3.4 Acceptance Criteria

The system shall be accepted by the end user upon completion of the following:

1) Completed system commissioning per section 2.4
2) Production of 1st useable effluent

Approximately 51 per rack each day

DRAFT

PALL Water

O&M Cost Summary

All informations regarding waste, chemical usage and electricity are based on the following assumptions:

1. All racks (including redundant racks if any) are on line
2. EFM is triggered by volume and occurs less frequenctly at lower flux.
3. Chemical solutions are not reused
4. Solution strength, chemical pricing and electricity pricing assumptions are proivded on the next page.
5. The values provided are estimated and do not account for fluid volumes associated with field piping or other plant specific conditions.

Waste Volumes			
	Frequency	Waste per Event	Daily Waste (Gal)
Flux Maintenance (Reverse Filtration)	Approximately 26 per rack each day	1,372	108,176

Chemical Cleaning Waste Volumes			
	Frequency	Monthly Waste (Gal)	Annual Waste (MGal)
Enhanced Flux Maintenance (EFM) & Clean in Place (CIP) Waste	EFM 7 day(s) CIP 30 days	62,557	0.75

DRAFT

Electrical Usage		
kWhr/month	kWhr/yr	$USD/yr
25,752	309,022	$30,902

Chemical Usage			
	Gal/year	Gal/month	$USD/yr
Chlorine: (Sodium Hypochlorite)	1,772	148	$2,481
Caustic (NaOH): (Sodium Hydroxide)	2,122	177	$3,820
Citric Acid:	2,215	185	$11,961
Sodium Bisulfite:	140	12	$343

Confidential - Company Proprietary

O&M Cost Summary		
Energy and Chemical Cost Assumptions		
Electricity:	Cost Per KWH	$0.10
Chlorine:	Cost Per Gallon of Stock Solution	$1.40
(Sodium Hypochlorite)	Concentration of Stock Solution	12.5%
Caustic (NaOH):	Cost Per Gallon of Stock Solution	$1.80
(Sodium Hydroxide)	Concentration of Stock Solution	25.0%
Citric Acid:	Cost Per Gallon of Stock Solution	$5.40
	Concentration of Stock Solution	50.0%
Sodium Bisulfite:	Cost Per Gallon of Stock Solution	$2.45
	Concentration of Stock Solution	40.0%

DRAFT

Confidential - Company Proprietary

REVISION	REVISION DESCRIPTION	CHG BY	PROJ ENG	ENG/APVD	ENG/APVD	ENG/APVD	CHRO/APVD
01	CORRECTED VIEWS FOR MISSING DIMENSIONS.	SPS 27JUN2019	JMG 26JUL2019				KRH 26JUL2019

ASSY,MF SYSTEM,AP8,REL 3.0
AP8 GENERAL ARRANGEMENT DRAWING
BASE SKID W/OPTIONAL ASSEMBLIES + MODULE RACK + TANK(S)

NOTES
1. ALL PIPING DESIGNER, SUPPLIED AND OR INSTALLED BY OTHERS MUST BE PLUMB, SQUARE, AND LEVEL (UNLESS FOR DRAINAGE) AND SHALL NOT TRANSMIT WEIGHT OR OTHER LOADS (THERMAL, SEISMIC, WATER HAMMER, ETC.) TO PALL WATER EQUIPMENT CONNECTIONS.
2. THE DISCS ON ELASTOMER-SEATED BUTTERFLY VALVES MUST BE AT LEAST PARTIALLY OPEN WHEN TIGHTENING FLANGE BOLTS. FAILURE TO DO SO WILL CAUSE PREMATURE FAILURE, AND WILL VOID ALL WARRANTIES ON THE VALVE.
3. REFERENCED VENT LINES SHALL BE ROUTED (BY OTHERS) TO A SUITABLE CHEMICAL DRAIN WITH AIR GAP AND SPLASH PROTECTION. THIS PIPING SHALL NOT REDUCE IN SIZE BETWEEN VALVE AND AIR GAP.
4. EACH MODULE RACK IS SHIPPED PARTIALLY ASSEMBLED. REFER TO SEPARATE INSTALLATION INSTRUCTIONS.
5. MODULES ARE SHIPPED SEPERATELY. DO NOT DROP OR EXPOSE THE MODULES OR THEIR SHIPPING CONTAINERS TO SHOCK OR IMPACT. THERE MAY BE DAMAGE TO THE MEMBRANE EVEN IF NO VISIBLE DAMAGE TO THE MODULE CASE IS EVIDENT. DO NOT STORE THE MODULES OR THEIR SHIPPING CONTAINERS OUTSIDE OR IN AN AREA WHERE THERE WILL BE EXPOSURE TO DIRECT SUNLIGHT, EXCESSIVE HEAT, OR COLD. PALL CORPORATION REQUIRES MEMBRANES BE STORED IN A CONTROLLED, SECURE ENVIRONMENT TO GUARANTEE MODULES ARE NOT DAMAGED DURING STORAGE.
6. SEE ELECTRICAL DRAWINGS FOR FIELD WIRING REQUIREMENTS.
7. ANCHOR BOLT REQUIREMENTS TO BE PROVIDED BY OTHERS.
8. ESTIMATED WEIGHTS:
   - TANK T1 DRY - 600 LB. [272 KG]
   - TANK T2 DRY - 600 LB. [272 KG]
   - SKID & INTERCONNECT DRY - 7,000 LB. [3,175 KG]
   - FILTER RACK DRY-W/MODULES - ____ LB. [____ KG]
   - TANK T1 WET - 21,000 LB. [9,525 KG]
   - TANK T2 WET - 21,000 LB. [9,525 KG]
   - SKID & INTERCONNECT WET - 8,000 LB. [3,629 KG]
   - FILTER RACK WET-W/MODULES - ____ LB. [____ KG]

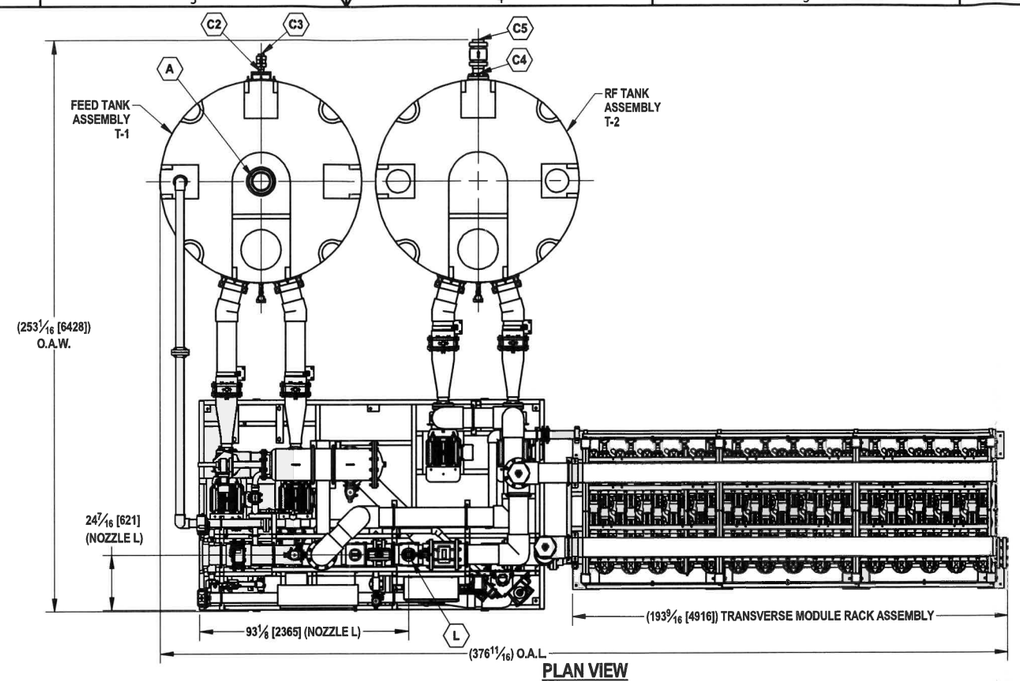

PLAN VIEW
-DEDICATED FEED / XR / DUAL TURB. OPTIONS-
(___ MODULE FILTER RACK W/___ MODULES INSTALLED)
(5 - 5 - 5 ROW MODULE SECTION ASSEMBLY)
SCALE: 1 / 32

DRAFT

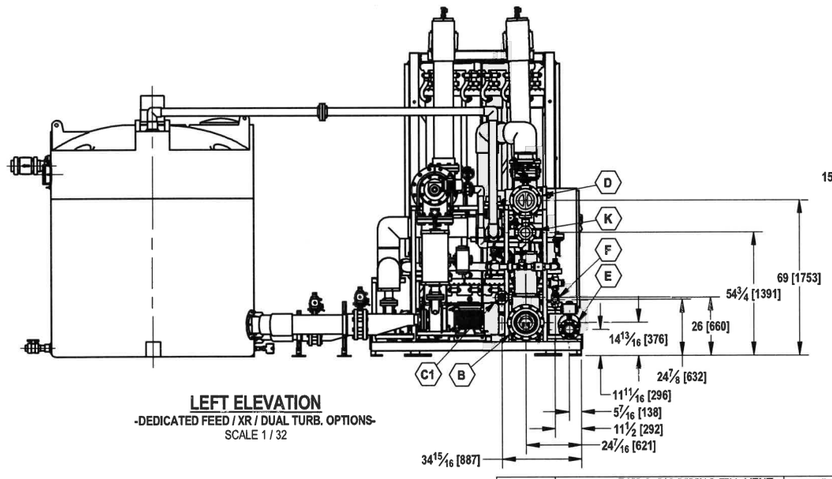

LEFT ELEVATION
-DEDICATED FEED / XR / DUAL TURB. OPTIONS-
SCALE 1 / 32

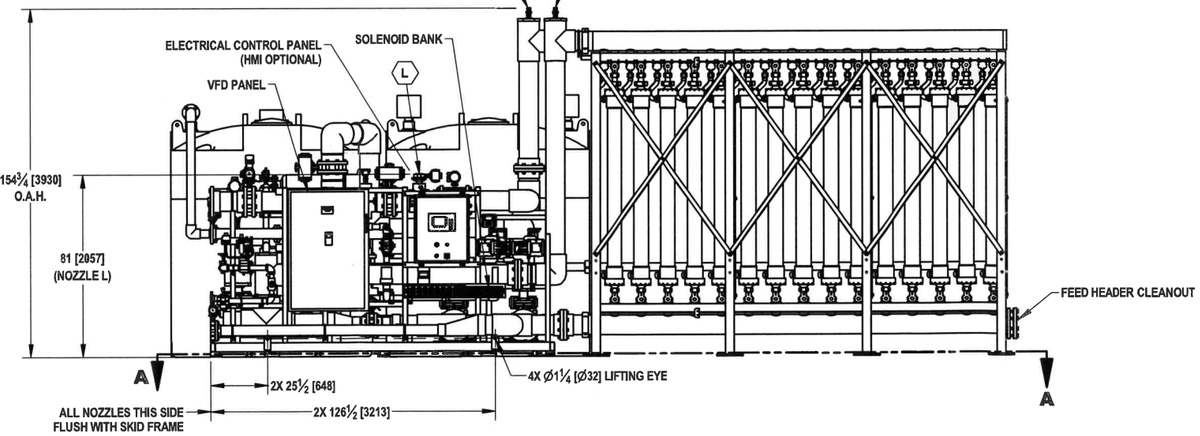

FRONT ELEVATION
-DEDICATED FEED / XR / DUAL TURB. OPTIONS-
SCALE 1 / 32

ITEM	DESCRIPTION	SIZE	TYPE	MAT'L
V2	EXCESS RECIRC. I/C PIPING FILL VENT	1"	FNPT	POLYMER
V1	FILTRATE I/C PIPING FILL VENT	1"	FNPT	POLYMER
L	FILTRATE CIRCULATION OUTLET	2"	150# FLG	CI
K	FEED CIRCULATION OUTLET	4"	150# FLG	PVC
F	COMPRESSED AIR SUPPLY	2"	FNPT	SST
E	CIP / EFM - INLET / DRAIN	4"	150# FLG	CI
D	FILTRATE OUT	8"	150# FLG	PVC
C5	RF TANK DRAIN	2"	FNPT	PVC
C4	RF TANK OVERFLOW	4"	SW	PVC
C3	FEED TANK DRAIN	2"	FNPT	PVC
C2	FEED TANK OVERFLOW	8"	GROOVED PIPE	SST
C1	GRAVITY DRAIN	2"	150# FLG	PVC
B	RF / AS MISC. DRAIN	10"	150# FLG	PVC
A	FEED TANK INLET	8"	SW	PVC

SCOPE LIMIT TABLE

DO NOT MODIFY
STANDARD ENGINEERING DOCUMENT
CONTROLLED BY ENGINEERING STANDARDS GROUP

These commodities, technology or software may only be exported from the United States in accordance with the Export Administration Regulations. Diversion contrary to U.S. law is prohibited.

SEE SHEET 1 FOR REVISION

UNLESS OTHERWISE SPECIFIED, THE FOLLOWING INFORMATION PERTAINS ONLY TO THIS SHEET

DIMENSIONS ARE IN: ☐ INCHES ONLY ☐ MILLIMETERS ONLY [X] IN [mm] ☐ mm [IN]
TOLERANCE: ANGLE ± 1/2 DEG; FRACTION ±1/4 [6]; .XXXX ±; .XXX ±; .XX ±; .X ±
ALL FINISHED SURFACES ✓ µIN ✓ µm
SCALE: AS NOTED — DO NOT SCALE FROM DRAWING
THIRD ANGLE PROJECTION

	NAME	DATE
DRAWN BY	D. TRAVIS	14AUG2018
PROJECT ENGINEER	J. GRIFFIN	24SEP2018
ENGINEER	--	--
ENGINEER	--	--
ENGINEER	--	--
CHECKER	K. HAWKS	24SEP2018
CODE IDENTIFICATION NO.	17238	
PROJECT ID	AP8 STANDARD	
DRAWING NAME	DEDICATED AP8 MF SYSTEM G.A. TEMPLATE R3.0	

IMPORTANT *BEFORE ATTEMPTING TO OPERATE OR INSTALL THIS SYSTEM, IT IS ESSENTIAL TO READ AND UNDERSTAND THIS PRODUCT'S OPERATION AND MAINTENANCE MANUAL (SHIPPED UNDER SEPARATE COVER). FAILURE TO READ THE OPERATION AND MAINTENANCE MANUAL BEFORE ATTEMPTING TO OPERATE ANY PALL CORPORATION EQUIPMENT MAY RESULT IN SERIOUS PERSONAL INJURY AND/OR PRODUCT DAMAGE, AND VOID ANY AND/OR ALL WARRANTIES.*

PALL Corporation
Pall Advanced Separation Systems
Industrial, Cortland NY

Copyright 2018 PALL CORPORATION
This document may contain confidential technical data, including trade secrets proprietary to Pall Corporation. The drawing, design rights and all other disclosures in this document are the property of Pall Corporation. Unauthorized use, copying, distribution to third parties, manufacture, or reproduction in whole or in part is prohibited.

DRAWING NUMBER	REVISION
NYCS000011237	01

MATERIAL MASTER	DWG SIZE	SHEET	OF
---	D	1	3

FORMAT VER: R2013.4

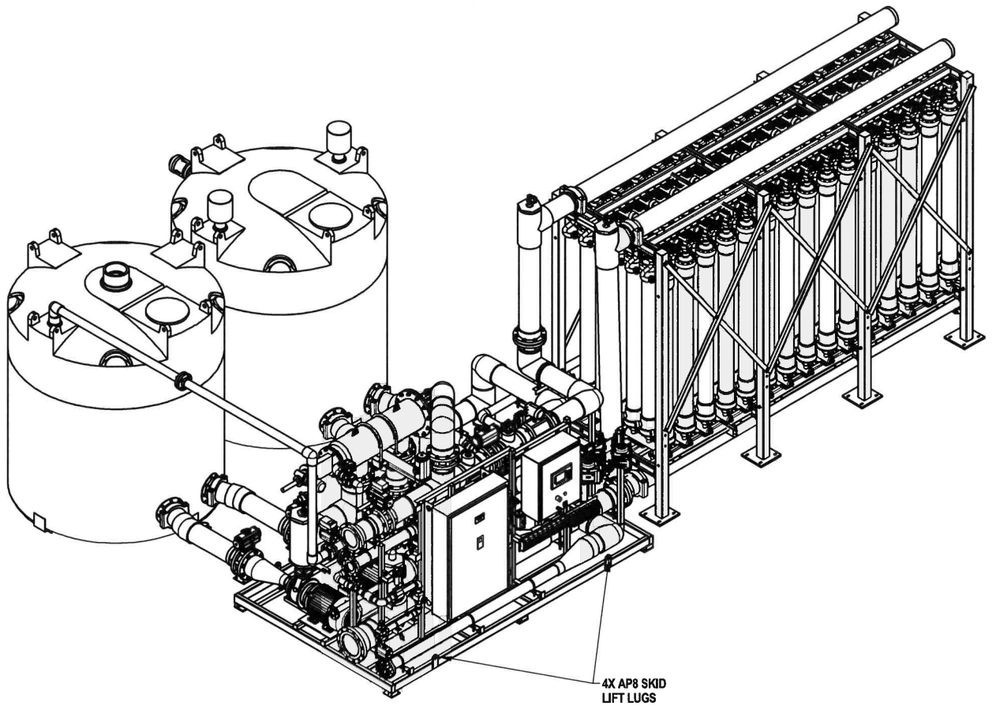

LEFT / FRONT ISOMETRIC VIEW
-DEDICATED FEED / XR / DUAL TURB. OPTIONS-
SCALE: NONE

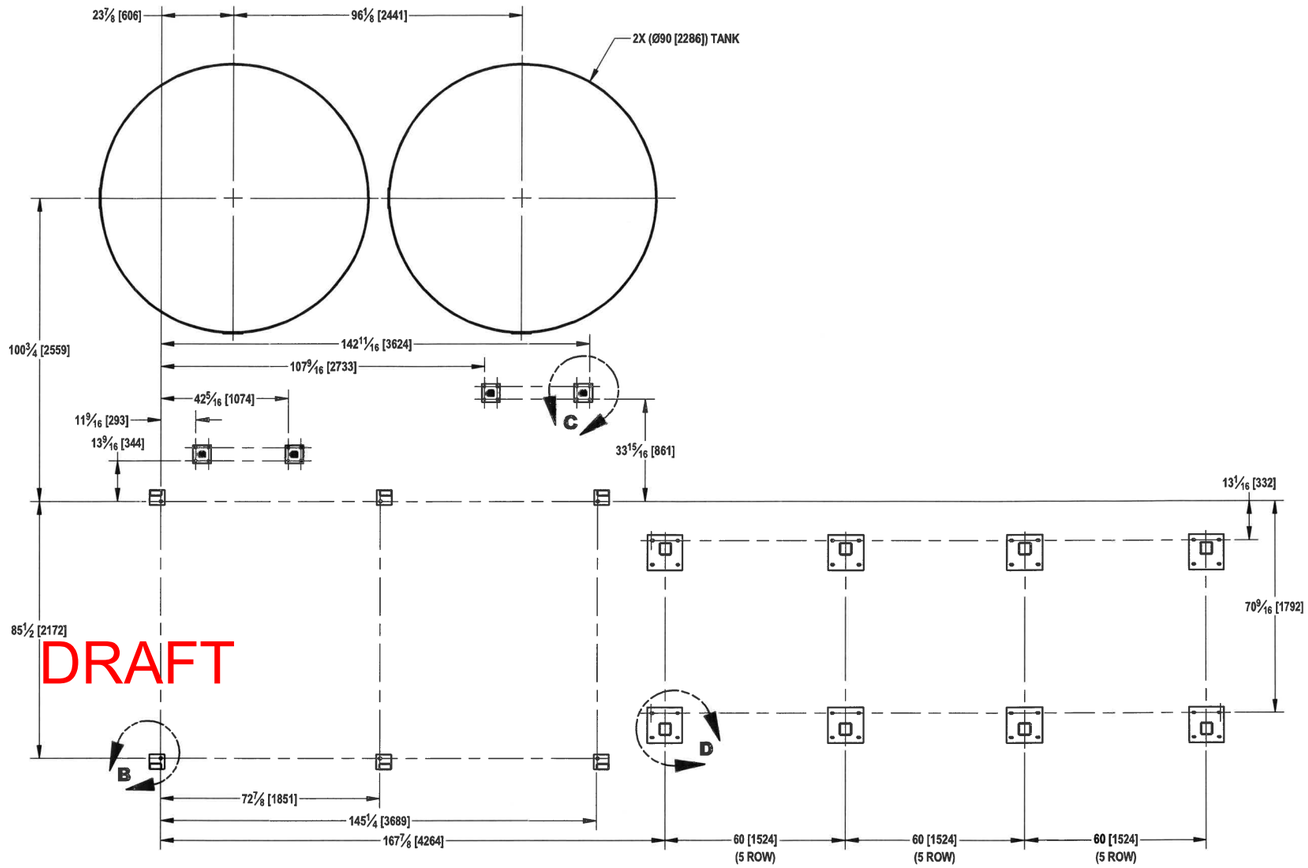

SECTION A-A
-EQUIPMENT BASES-
SCALE 1 / 24

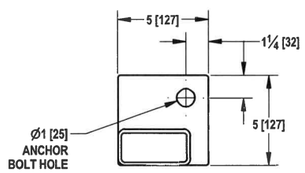

DETAIL B
AP8 SKID BASEPLATE
(TYPICAL (6) LOCATIONS)
SCALE 1 / 4

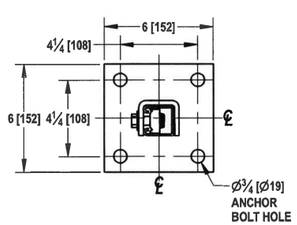

DETAIL C
PIPING SUPPORT BASEPLATE
(TYPICAL (4) LOCATIONS)
SCALE 1 / 4

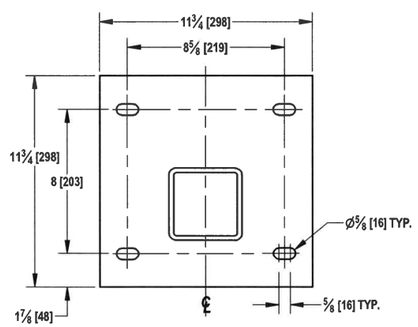

DETAIL D
MODULE RACK BASEPLATE
(TYPICAL (__) LOCATIONS)
SCALE 1 / 4

DO NOT MODIFY
STANDARD ENGINEERING DOCUMENT
CONTROLLED BY ENGINEERING STANDARDS GROUP

These commodities, technology or software may only be exported from the United States in accordance with the Export Administration Regulations. Diversion contrary to U.S. law is prohibited.

SEE SHEET 1 FOR REVISION

UNLESS OTHERWISE SPECIFIED, THE FOLLOWING INFORMATION PERTAINS ONLY TO THIS SHEET

DIMENSIONS ARE IN: ☐ INCHES ONLY ☐ MILLIMETERS ONLY ☒ IN [mm] ☐ mm [IN]
TOLERANCE: ANGLE ± 1/2 DEG; FRACTION ±1/4 [6]; .XXXX ±; .XXX ±; .XX ±; .X ±; X. ±
ALL FINISHED SURFACES ✓ µIN ✓ µm
SCALE AS NOTED — DO NOT SCALE FROM DRAWING
THIRD ANGLE PROJECTION

	NAME	DATE
DRAWN BY	D. TRAVIS	14AUG2018
PROJECT ENGINEER	J. GRIFFIN	24SEP2018
ENGINEER	--	--
ENGINEER	--	--
ENGINEER	--	--
CHECKER	K. HAWKS	24SEP2018

CODE IDENTIFICATION NO. 17238
PROJECT ID AP8 STANDARD
DRAWING NAME DEDICATED AP8 MF SYSTEM G.A. TEMPLATE R3.0

IMPORTANT *BEFORE ATTEMPTING TO OPERATE OR INSTALL THIS SYSTEM, IT IS ESSENTIAL TO READ AND UNDERSTAND THIS PRODUCT'S OPERATION AND MAINTENANCE MANUAL (SHIPPED UNDER SEPARATE COVER). FAILURE TO READ THE OPERATION AND MAINTENANCE MANUAL BEFORE ATTEMPTING TO OPERATE ANY PALL CORPORATION EQUIPMENT MAY RESULT IN SERIOUS PERSONAL INJURY AND/OR PRODUCT DAMAGE, AND VOID ANY AND/OR ALL WARRANTIES.*

PALL Corporation
Pall Advanced Separation Systems
Industrial, Cortland NY

Copyright 2018 PALL CORPORATION
This document may contain confidential technical data, including trade secrets proprietary to Pall Corporation. The drawing, design rights and all other disclosures in this document are the property of Pall Corporation. Unauthorized use, copying, distribution to third parties, manufacture, or reproduction in whole or in part is prohibited.

DRAWING NUMBER NYCS000011237 — REVISION 01
MATERIAL MASTER ---
DWG SIZE D
SHEET 2 OF 3
FORMAT VER: R2013.4

REVISION	REVISION DESCRIPTION	CHG BY	PROJ ENG	ENG/APVD	ENG/APVD	ENG/APVD	CHK/APVD
01	REVISED FOR VENDOR BUILT ASSEMBLY	SS 25/JUN/2018	JG 25/JUL/2018				KH 25/JUL/2018

CONNECTION TABLE

CONNECTION	SIZE	DESCRIPTION	TYPE	MAT'L
MANWAY	15" [381]	MANWAY	SCREWED LID	HDPE
N1	3" [80]	TANK RETURN INLET	SOCKET WELD	PVC
N2	6" [150]	OUTLET	150LB FLANGE	PVC
N7	6" [150]	OVERFLOW	SOCKET WELD	PVC
N8	1/2" [15]	SAMPLE PORT	FNPT	PVC
N9	2" [50]	DRAIN	FNPT	PVC
N10	1" [25]	CAUSTIC INLET	FNPT	PVC
N11	1" [25]	ACID INLET	FNPT	PVC
N12	1" [25]	SODIUM BISULFITE INLET	FNPT	PVC
N13	6" [150]	VENT	SOCKET WELD	PVC
LIT-70	1/2" [15]	LEVEL INDICATING TRANSMITTER	FNPT	SST

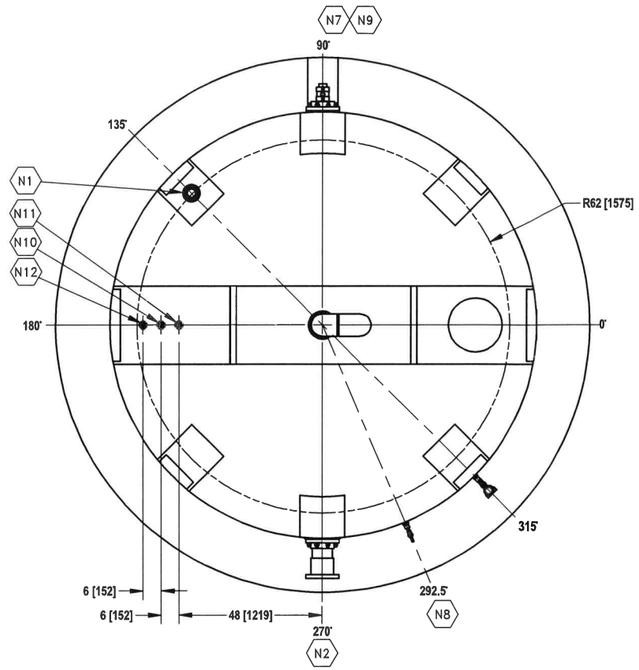

PLAN VIEW
SCALE 1 / 24

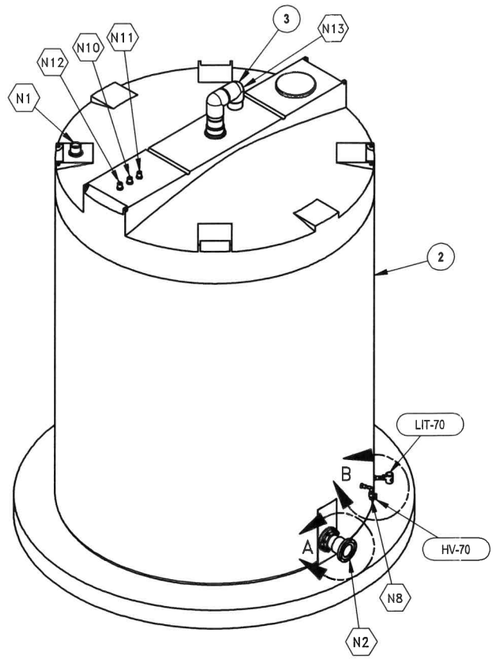

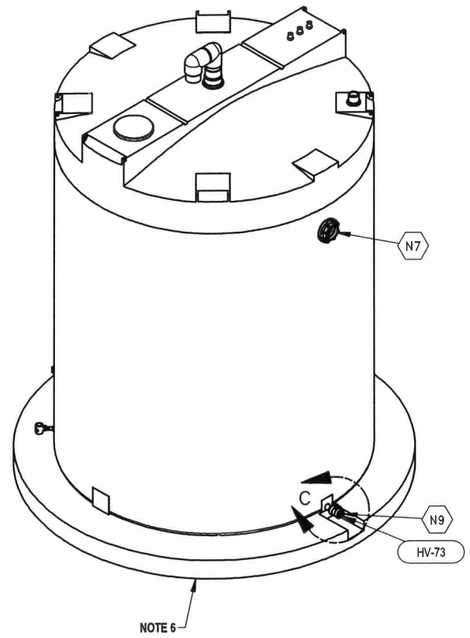

DRAFT

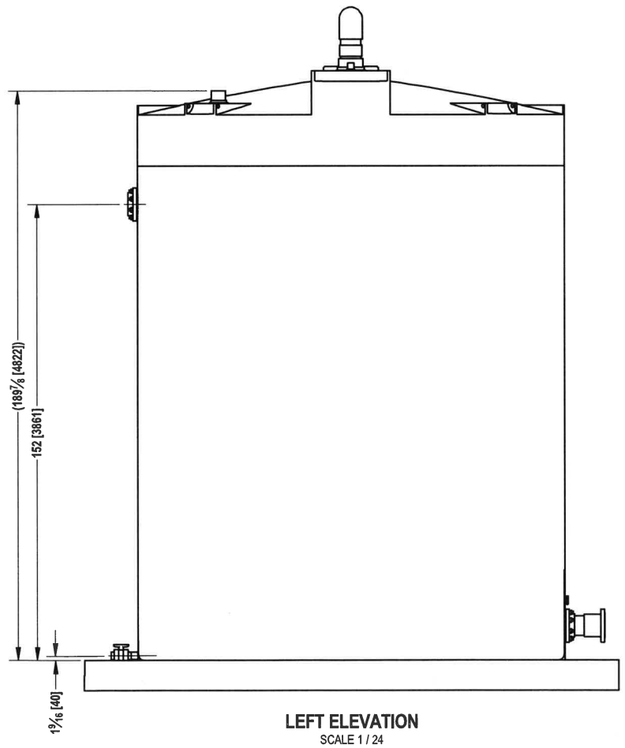

LEFT ELEVATION
SCALE 1 / 24

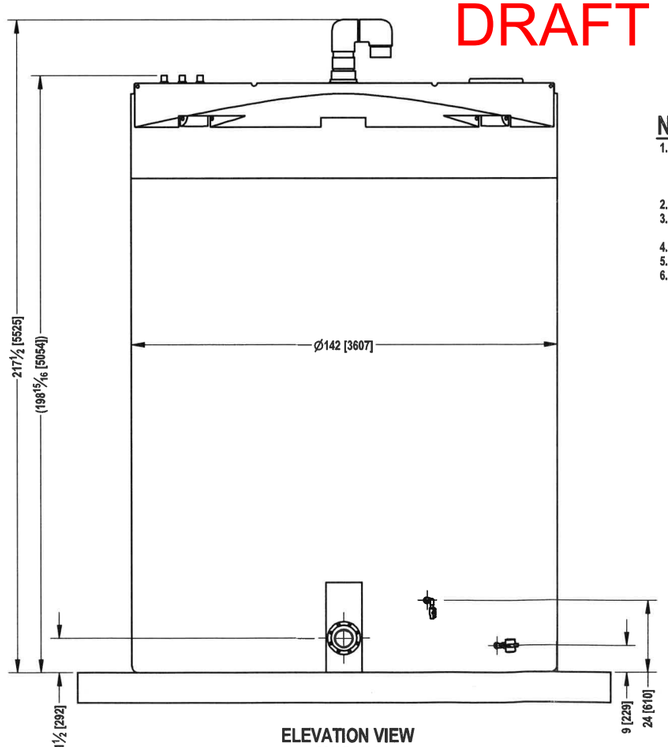

ELEVATION VIEW
SCALE 1 / 24

NOTES:

1. MATERIALS OF CONSTRUCTION:
   TANK HDPE - SNYDER MODEL 5350
   FITTINGS - PVC
   GASKETS - EPDM
2. HIGH DENSITY LINEAR POLYETHYLENE (HDLPE) WHITE. SPECIFIC GRAVITY RATING 1.9.
3. REFER TO TANK MANUFACTURER'S INSTALLATION DOCUMENT FOR SPECIFIC FABRICATION / INSTALLATION REQUIREMENTS.
4. ALL ITEMS SHOWN ARE SUPPLIED LOOSE FOR FIELD INSTALLATION BY OTHERS.
5. PIPING CONNECTIONS TO TANK MUST BE ADEQUATELY SUPPORTED TO PREVENT NOZZLE LOADS ON THE TANK.
6. TANK FOUNDATION (SUPPLIED AND DESIGNED BY OTHERS) REQUIRES A RECESS 10" MINIMUM WIDE, 5" MINIMUM DEPTH EXTENDING FROM TANK WALL OUT 18" MINIMUM AT DRAIN CONNECTION. THIS RECESS IS FOR PROPER ACCESS AND OPERATION OF DRAIN VALVE.

CAPACITY: 12,500 GALLONS
DESIGN PRESSURE: ATM
DESIGN OPERATING TEMPERATURE: 104°F
MAXIMUM ALLOWABLE FLUID TEMPERATURE: 104°
ESTIMATED DRY WEIGHT: 4,200 LBS.
ESTIMATED WET WEIGHT: 110,450 LBS.

ITEM	QTY	NAME	DESCRIPTION	MM#	LENG	COMMENTS	MATL	APP CODE	MFR	MFR P/N
11	1	VALVE,BALL	2 in NPT SCH 80 235 PSI TRUE UNION	WH018230		EPDM O-RING	PVC/EPDM	ASTM F 1970	SPEARS MFG	3629-020
10	1	VALVE,BALL	1/2 FNPT 235 PSI FULL LEVER,COMPACT	WH068191		REFER TO MM#	PVC	ASTM F 1970	SPEARS MFG	2121-005
9	1	NIPPLE,PIPE	6 SCH 80 NSF	WH085012	6 in	TBE	PVC GRAY	ASTM D1785	SPEARS MFG	892-060
8	1	NIPPLE,PIPE	2 in SCH 80 NSF	WH085010	3 1/2 in	TBE	PVC GRAY	ASTM D1785	SPEARS MFG	887-035
7	2	NIPPLE,PIPE	1/2 in SCH 80 NSF	WH085014	2 in	TBE	PVC GRAY	ASTM D1785	SPEARS MFG	882-020
6	1	NIPPLE,PIPE	1/2 SCH 40 NPT	WH012123	1 1/2 in	TBE	A312 TP316	ASME B36.19		
5	1	INSTR,PRESSURE	TRANSMITTER 1/2in NPT 0-30 PSI	WH020129		REFER TO MM#	316 SST		ROSEMOUNT	2088G1S22A1C6M5Q4DW
4	1	FLANGE,VANSTONE	6 RF 150 LB FNPT SCH 80	WH085013			PVC GRAY	ASTM D1784	SPEARS MFG	855-060
3	1	EQUIP,U VENT	GIN SCH 40	WH085015			PVC		SNYDER	347197
2	1	EQUIP,TANK	142 DIA 12,500 GALLON NEUT AP	APX3501011						
1	1	ELBOW,WELD	1/2 FNPT SCH 80 90°	WH056052			PVC GRAY	ASTM D2467	SPEARS MFG	808-055R

DO NOT MODIFY
STANDARD ENGINEERING DOCUMENT
CONTROLLED BY ENGINEERING STANDARDS GROUP

These commodities, technology or software may only be exported from the United States in accordance with the Export Administration Regulations. Diversion contrary to U.S. law is prohibited.

SEE SHEET 1 FOR REVISION

UNLESS OTHERWISE SPECIFIED, THE FOLLOWING INFORMATION PERTAINS ONLY TO THIS SHEET

DIMENSIONS ARE IN: ☐ INCHES ONLY ☐ MILLIMETERS ONLY ☒ IN [mm] ☐ mm [IN]
TOLERANCE: ANGLE ± 1/2 DEG; FRACTION ± 1/4 [6]; XXXX ±; XXX ±; .XX ±; .X ±; X. ±
ALL FINISHED SURFACES ✓ µIN ✓ µm
SCALE 1:24 DO NOT SCALE FROM DRAWING
THIRD ANGLE PROJECTION

	NAME	DATE
DRAWN BY	S. SMITH	16/JUL/2018
PROJECT ENGINEER		
ENGINEER	–	–
ENGINEER	–	–
ENGINEER	–	–
CHECKER		
CODE IDENTIFICATION NO.	17238	
PROJECT ID	AP STD	
DRAWING NAME	ASSY, TANK, GA, 12500 GAL, NEUT, AP, R1.0	

PALL Corporation
Pall Advanced Separation Systems
Industrial, Cortland NY

Copyright 2018 PALL CORPORATION
This document may contain confidential technical data, including trade secrets proprietary to Pall Corporation. The drawing, design rights and all other disclosures in this document are the property of Pall Corporation. Unauthorized use, copying, distribution to third parties, manufacture, or reproduction in whole or in part is prohibited.

IMPORTANT *BEFORE ATTEMPTING TO OPERATE OR INSTALL THIS SYSTEM, IT IS ESSENTIAL TO READ AND UNDERSTAND THIS PRODUCT'S OPERATION AND MAINTENANCE MANUAL (SHIPPED UNDER SEPARATE COVER). FAILURE TO READ THE OPERATION AND MAINTENANCE MANUAL BEFORE ATTEMPTING TO OPERATE ANY PALL CORPORATION EQUIPMENT MAY RESULT IN SERIOUS PERSONAL INJURY AND/OR PRODUCT DAMAGE, AND VOID ANY AND/OR ALL WARRANTIES.*

DRAWING NUMBER	REVISION
NYCS000010881	01
MATERIAL MASTER: APX3501001	DWG SIZE: D
SHEET 1 OF 2	

FORMAT VER: R2013.4

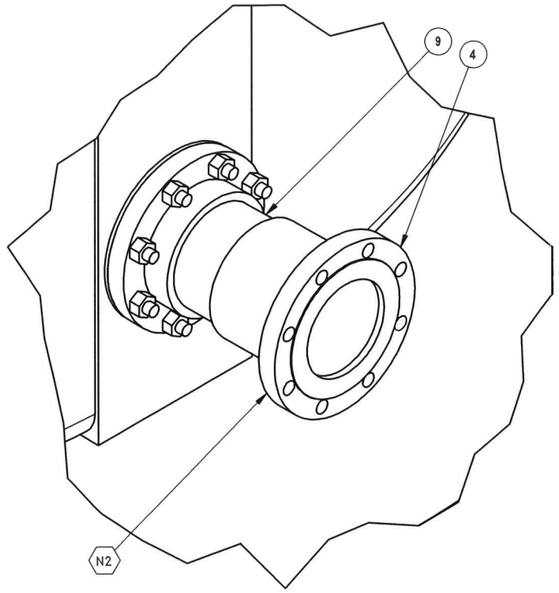

DETAIL A
SEE NOTE 4
SCALE 1 / 4

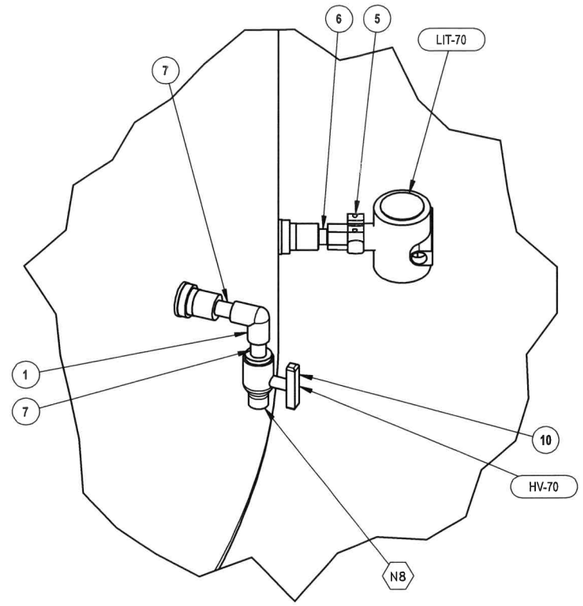

DETAIL B
SEE NOTE 4
SCALE 1 / 4

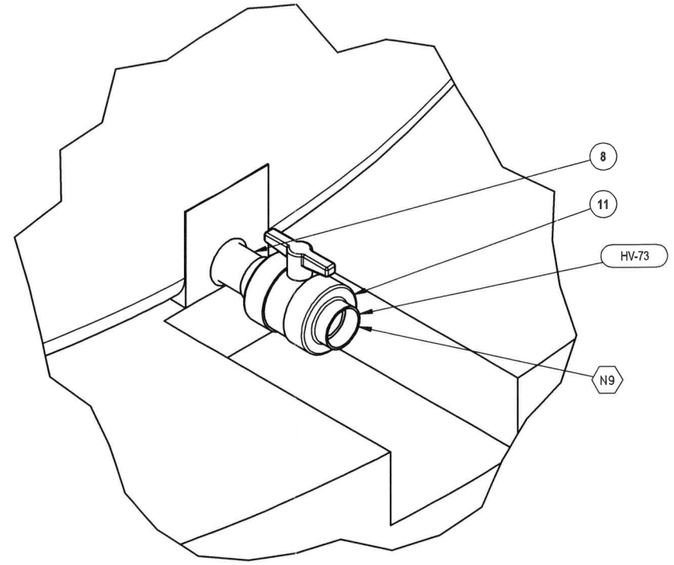

DETAIL C
SEE NOTE 4
SCALE 1 / 4

DRAFT

DO NOT MODIFY
STANDARD ENGINEERING DOCUMENT
CONTROLLED BY ENGINEERING STANDARDS GROUP

These commodities, technology or software may only be exported from the United States in accordance with the Export Administration Regulations. Diversion contrary to U.S. law is prohibited.

SEE SHEET 1 FOR REVISION

UNLESS OTHERWISE SPECIFIED, THE FOLLOWING INFORMATION PERTAINS ONLY TO THIS SHEET

DIMENSIONS ARE IN: ☐ INCHES ONLY ☐ MILLIMETERS ONLY ☒ IN [mm] ☐ mm [IN]

ALL FINISHED SURFACES √ µIN √ µm

SCALE AS NOTED — DO NOT SCALE FROM DRAWING

THIRD ANGLE PROJECTION

TOLERANCE: ANGLE ± 1/2 DEG; FRACTION ± 1/8; .XXXX ±; .XXX ±; .XX ±; .X ±; X. ±

	NAME	DATE
DRAWN BY	S. SMITH	16/JUL/2018
PROJECT ENGINEER		
ENGINEER	–	–
ENGINEER	–	–
ENGINEER	–	–
CHECKER		

CODE IDENTIFICATION NO. 17238

PROJECT ID AP STD

DRAWING NAME ASSY, TANK, GA, 12500 GAL, NEUT, AP, R1.0

PALL Corporation
Pall Advanced Separation Systems
Industrial, Cortland NY

Copyright 2018 PALL CORPORATION
This document may contain confidential technical data, including trade secrets proprietary to Pall Corporation. The drawing, design rights and all other disclosures in this document are the property of Pall Corporation. Unauthorized use, copying, distribution to third parties, manufacture, or reproduction in whole or in part is prohibited.

IMPORTANT *BEFORE ATTEMPTING TO OPERATE OR INSTALL THIS SYSTEM, IT IS ESSENTIAL TO READ AND UNDERSTAND THIS PRODUCT'S OPERATION AND MAINTENANCE MANUAL (SHIPPED UNDER SEPARATE COVER). FAILURE TO READ THE OPERATION AND MAINTENANCE MANUAL BEFORE ATTEMPTING TO OPERATE ANY PALL CORPORATION EQUIPMENT MAY RESULT IN SERIOUS PERSONAL INJURY AND/OR PRODUCT DAMAGE, AND VOID ANY AND/OR ALL WARRANTIES.*

DRAWING NUMBER NYCS000010881 — REVISION 01
MATERIAL MASTER APX3501001 — DWG SIZE D — SHEET 2 OF 2
FORMAT VER: R2013.4

APPENDIX D

CALGON CORPORATION GAC DATASHEETS AND PRELIMINARY DRAWINGS

DRAFT

MODEL 12-40

Modular Carbon Adsorption System

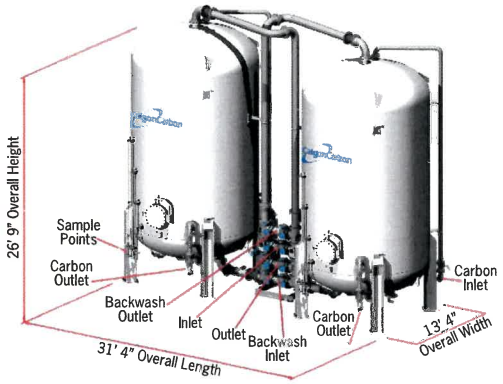

Description

The Calgon Carbon MODEL 12-40 is an adsorption system designed for the removal of dissolved organic contaminants, including disinfection byproducts (DBP) or natural organic matter (NOM) from liquids using granular activated carbon (GAC). The vessels are sized to hold 40,000 pounds of GAC, which provides the additional contact time required to remove either compounds at low concentrations or poorly adsorbing compounds. The standard design (MODEL 12-40 SYSTEM) consists of two vessels combined with a centralized pipe manifold to allow for series operation. Many of the DBP installations utilize multiple vessels operated in parallel. For these cases, an optional offering is the single vessel concept (MODEL 12-40 SINGLE). This flexibility of configurations allows the engineer to select the alternative that best meets the requirements of the site and treatment objectives.

The MODEL 12-40 SYSTEM is delivered as two adsorbers, a centrally located valve manifold and interconnecting piping requiring minimal space and field assembly. The process piping network for the MODEL 12-40 SYSTEM accommodates operation of the adsorbers in series (with either adsorber placed in first stage) or parallel. The valve manifold can be configured to isolate either adsorber from the flow, which permits carbon exchange or backwash operations to be performed on one adsorber without interrupting treatment. Each vessel is provided with GAC fill and discharge pipe including appropriate quick connect fittings for connection to water and compressed air sources. All valves and accessories are located at low elevations for ease of operation and maintenance.

The MODEL 12-40 SINGLE is delivered as a single adsorber with process pipe extending to grade. The single vessel is typically provided for systems consisting of multiple units operated in parallel. Process valves are not part of the standard package but can be supplied as an option. The vessel is provided with GAC fill and discharge pipe including appropriate quick connect fittings for connection to water and compressed air sources. All valves and accessories are located at low elevations for ease of operation and maintenance.

The MODEL 12 vessels – either systems or single vessels – are provided with features common in either configuration:

- The unique internal cone under-drain design provides for the efficient collection of treated water and the distribution of backwash water. The internal cone also insures efficient and complete discharge of spent carbon from the adsorber without the need to open the manway to manually wash out the residual spent carbon.
- In bed sample ports. The MODEL 12 vessel is provided with three (3) nozzles located along the straight side of the vessel. These nozzles can be fitted with in-bed sample assemblies which allow the operator to monitor the progress of the adsorbent as it flows through the bed. For the MODEL 12-40 SYSTEM in-bed sample assemblies are an option. For the MODEL 12-40 SINGLE in-bed sample assemblies are standard.
- The MODEL 12 vessel is provided with one (1) GAC fill line and two (2) GAC discharge lines. The multiple discharge lines are positioned to each extract 20,000 pounds of spent carbon. This feature minimizes the time required for GAC exchanges by eliminating the guesswork of loading the spent to the trailers. The one (1) side mounted discharge nozzle is provided with a stainless steel insert which has two functions. The stainless nozzle projects into the vessel and protects the lining during carbon exchange. Also, since GAC can vary in density depending on starting material and activity, the discharge nozzle inserts can be rotated 360 degrees to accommodate the differing densities. If the nozzle insert wears away, it is designed to be easily removed and replaced.
- The MODEL 12 vessel is sized to contain 40,000 lbs of GAC and to allow for backwash expansion of approximately 25% contained within the straight side of the vessel.

The pre-engineered MODEL 12-40 design assures that all adsorption system functions can be performed with the system as provided. Standard designs have the benefit of Calgon Carbon's extensive expertise and have been proven in numerous applications. The engineering package can be provided quickly and the system expedited through Calgon Carbon's production capabilities.

DRAFT

Safety Message

Wet activated carbon can deplete oxygen from air in enclosed spaces. If use in an enclosed space is required, procedures for work in an oxygen deficient environment should be followed.

© Copyright 2015 Calgon Carbon Corporation, All Rights Reserved

The MODEL 12-40 system is designed for use with Calgon Carbon's closed loop carbon exchange service. Using specially designed carbon transport trailers, the spent carbon can be removed from the adsorber via pressurized carbon-water slurry and fresh carbon refilled in the same manner. This closed loop transfer is accomplished without exposure of personnel to either spent or fresh carbon. Calgon Carbon can also manage the disposition of the spent carbon, which is typically returned to Calgon Carbon for reactivation – avoiding the need for the site to arrange for disposal.

Carbon Adsorbers	System	Single
Carbon Steel ASME code pressure vessels	✓	✓
Internal vinyl ester lining (nominal 35 to 45 mil) where GAC contacts steel for potable water and most liquid applications	✓	✓
Polypropylene slotted nozzles for water collection and backwash distribution	✓	✓
Standard Adsorption System Piping	✓	✓
Schedule 40 carbon steel process piping with cast iron fittings	✓	✓
Cast iron butterfly valves for process piping	✓	●
Full bore stainless steel ball valves for GAC fill and discharge	✓	✓
PPL lined steel pipe for GAC discharge	✓	✓
Pressure relief using graphite rupture discs	✓	✓
Pressure gages to measure pressure drop across system and each adsorber	✓	✓
System External Coating	✓	✓
High solids epoxy paint system	✓	✓
System skid, shipped seperately, upon which system components can be assembled	●	●
In-bed water sample collection probes	●	✓

✓ Included as Standard ● Available as Option



Dimensions and Field Conditions	MODEL 12-40
Adsorber Vessel Diameter	12' (3,660 mm)
Process and Backwash Pipe	8"
Process Pipe Connection	125# ANSI flange
Utility Water Connection	3/4" hose connection
Utility Air Connection	3/4" hose connection
Carbon Hose Connection	4" Kamlock type
Backwash Connections	8" flange
Drain/Vent Connection	8" flange
Adsorber Maintenance Access	20" round flanged man-way, 14" x 18" man-way below cone
Adsorber Shipping Weight	25,400 lbs. empty (11,550 kg)
System Operating Weight	385,000 lbs. (175,000 kg)

Operating Conditions	MODEL 12-40
Carbon per Adsorber	40,000 lbs. (18,180 kg)
Pressure Rating	125 psig (862 kPa) @ 140°F
Pressure Relief	Graphite rupture disk (125 psig)
Temperature Rating	140°F maximum (60°C)
Backwash Rate	Typical 1,700 gpm (25% expansion)
Carbon Transfer	Air pressure slurry transfer
Utility Air	100 scfm at 30 psig (reduce to 15 psig for trailer)
Utility Water	100 gpm at 30 psig
Freeze Protection	None provided; enclosure or protection recommended

DRAFT

Pressure Drop Model 12-40 System

with 40,000 lbs. 8x30 Mesh GAC per Vessel 8" Sch. 40 Pipe, 60°F

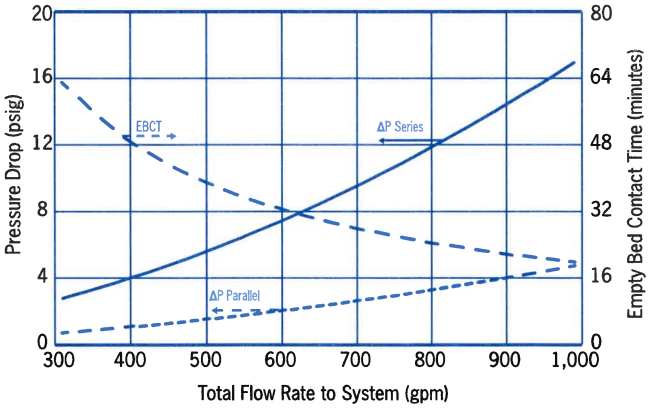

Safety Message

Wet activated carbon can deplete oxygen from air in enclosed spaces. If use in an enclosed space is required, procedures for work in an oxygen deficient environment should be followed.

1.800.4CARBON calgoncarbon.com

© Copyright 2015 Calgon Carbon Corporation, All Rights Reserved

DS-MODEL124015-EIN-E1

FILTRASORB® 400

Granular Activated Carbon

Applications

- Industrial Wastewater
- Groundwater
- Surface Water
- Pond/Aquarium/ Swim
- Bottle & Brewing
- Water Processing
- Pharmaceuticals
- Environmental Water
- Food & Beverage
- Drinking Water Industrial
- Water Reuse
- Drinking Water (Potable)
- Granular Activated Carbon
- Municipal
- Reactivation

FILTRASORB 400 activated carbon can be used in a variety of liquid phase applications for the removal of dissolved organic compounds. FILTRASORB 400 has been successfully applied for over 40 years in applications such as drinking and process water purification, wastewater treatment, and food, pharmaceutical, and industrial purification.

DRAFT

Description

FILTRASORB 400 is a granular activated carbon for the removal of dissolved organic compounds from water and wastewater as well as industrial and food processing streams. These contaminants include taste and odor compounds, organic color, total organic carbon (TOC), industrial organic compounds such as TCE and PCE, and PFAS.

This activated carbon is made from select grades of bituminous coal through a process known as reagglomeration to produce a high activity, durable, granular product capable of withstanding the abrasion associated with repeated backwashing, hydraulic transport, and reactivation for reuse. The raw coal is mined and subsequently manufactured into GAC in the United States to ensure the highest quality and consistency in the finished product. Activation is carefully controlled to produce a significant volume of both low and high energy pores for effective adsorption of a broad range of high and low molecular weight organic contaminants.

FILTRASORB 400 is formulated to comply with all the applicable provisions of the AWWA Standard for Granular Activated Carbon (B604) and Food Chemicals Codex. This product may also be certified to the requirements of NSF/ANSI 61 for use in municipal water treatment facilities. Only products bearing the NSF Mark are certified to the NSF/ANSI 61 - Drinking Water System Components - Health Effects standard. Certified Products will bear the NSF Mark on packaging or documentation shipped with the product.

Features / Benefits

- Produced in the United States from a pulverized blend of high quality, domestically mined bituminous coals resulting in a consistent, high quality product.
- Carbon granules are uniformly activated through the whole granule, not just the outside, resulting in excellent adsorption properties and constant adsorption kinetics.
- The reagglomerated structure ensures proper wetting while also eliminating floating material.
- High mechanical strength relative to other raw materials, thereby reducing the generation of fines during backwashing and hydraulic transport.
- Carbon bed segregation is retained after repeated backwashing, ensuring the adsorption profile remains unchanged and therefore maximizing the bed life.
- Reagglomerated with a high abrasion resistance, which provides excellent reactivation performance.
- High density carbon resulting in a greater adsorption capacity per unit volume.

Specifications[1]	FILTRASORB 400
Iodine Number, mg/g	1000 (min)
Moisture by Weight	2% (max)
Effective Size	0.55–0.75 mm
Uniformity Coefficient	1.9 (max)
Abrasion Number	75 (min)
Screen Size by Weight, US Sieve Series	
On 12 mesh	5% (max)
Through 40 mesh	4% (max)

[1]Calgon Carbon test method

Typical Properties*	FILTRASORB 400
Apparent Density (tamped)	0.54 g/cc
Water Extractables	<1%
Non-Wettable	<1%

*For general information only, not to be used as purchase specifications.

Safety Message

Wet activated carbon can deplete oxygen from air in enclosed spaces. If use in an enclosed space is required, procedures for work in an oxygen deficient environment should be followed.

1.800.4CARBON calgoncarbon.com

© Copyright 2019 Calgon Carbon Corporation, All Rights Reserved

DS-FILTRA40019-EIN-E1

Typical Pressure Drop

Based on a backwashed and segregated bed

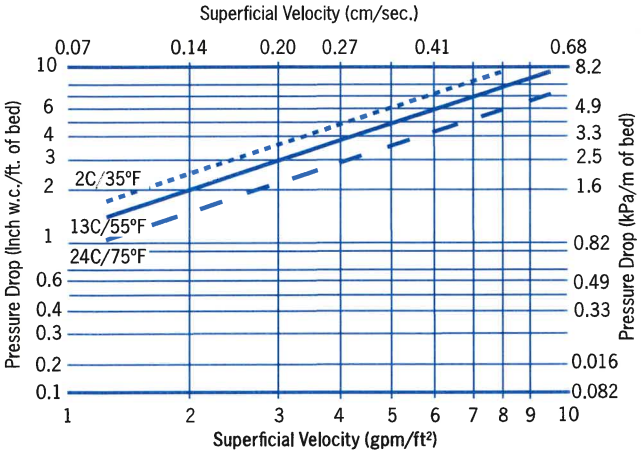

Typical Bed Expansion During Backwash

Based on a backwashed and segregated bed

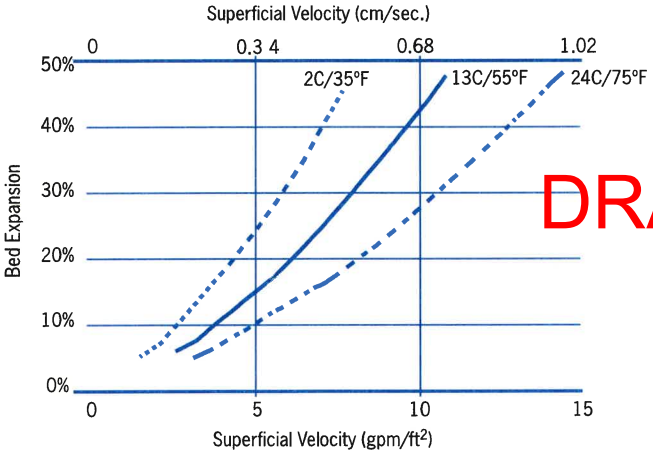

Conditioning and Backwashing

Backwashing and conditioning fresh GAC before placing into operation is critical to GAC performance. The reasons for backwashing before placing fresh media online are to: (1) size segregate the media so subsequent backwashing will return the media to the same relative position in the bed, (2) remove any remaining air from the bed, and (3) remove media fines which can lead to excessive pressure drop and flow restriction. In addition, proper backwashing is a crucial step to collecting the most representative and meaningful post-start up data on compounds of interest, such as metals listed in the NSF/ANSI 61 standard.

Below are the recommended steps for proper conditioning and backwashing of GAC based on Filtrasorb 400 GAC being backwashed at 55°F:

1. Fully submerge GAC bed in clean, contaminant free water for at least 16 hours (overnight)
2. Open backwash inlet and begin up-flow at 3 gpm/ft² for 2 minutes
3. Increase flow to 5 gpm/ft² and maintain for 2 minutes
4. Increase flow to 7 gpm/ft² and maintain for 2 minutes
5. Increase flow to 8.5 gpm/ft² and maintain for 30 minutes*
6. Decrease flow to 7 gpm/ft² and maintain for 2 minutes
7. Decrease flow to 5 gpm/ft² and maintain for 2 minutes
8. Decrease flow to 3 gpm/ft² and maintain for 2 minutes
9. Close backwash inlet and stop flow

*Duration representative of initial backwash conditions. Required duration during operational backwashes can be shorter but will vary by utility, solids load, and GAC throughput. Contact Calgon Carbon for more information"

DRAFT

Design Considerations

FILTRASORB 400 activated carbon is typically applied in down-flow packed-bed operations using either pressure or gravity systems. Design considerations for a treatment system is based on the user's operating conditions, the treatment objectives desired, and the chemical nature of the compound(s) being adsorbed.

Safety Message

Wet activated carbon can deplete oxygen from air in enclosed spaces. If use in an enclosed space is required, procedures for work in an oxygen deficient environment should be followed.

© Copyright 2019 Calgon Carbon Corporation, All Rights Reserved

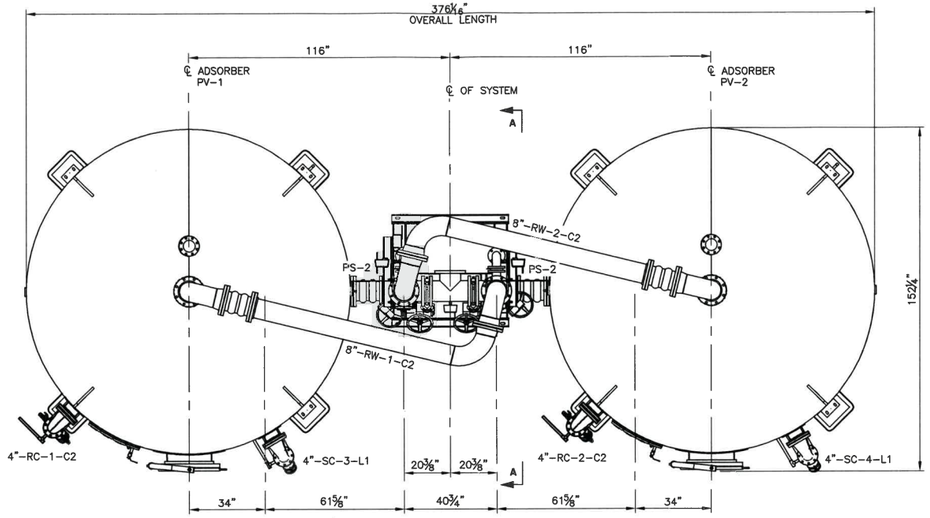

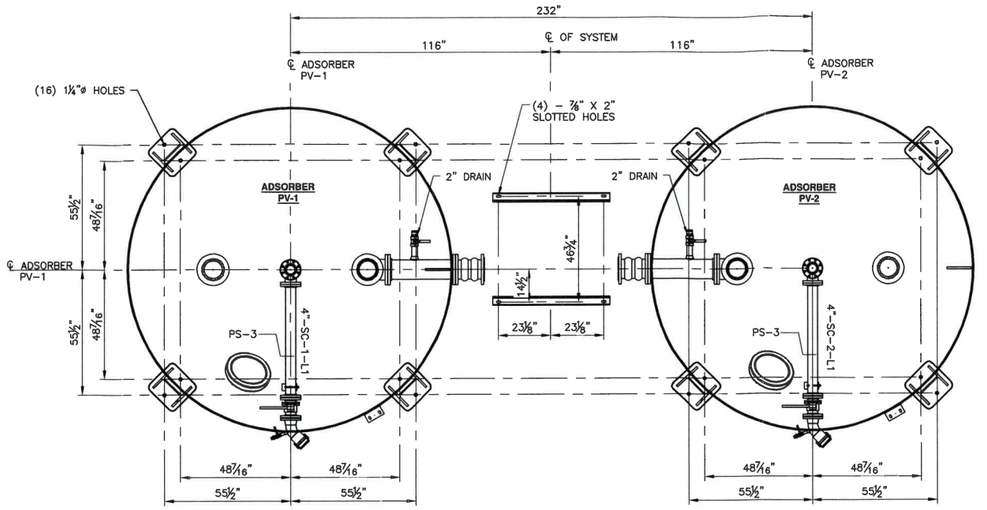

SYSTEM DATA	
DESIGN CONDITIONS	125 PSIG @ 140° F
DESIGN CODE	ASME SECTION VIII DIVISION1
APPROXIMATE WEIGHTS (LB.)	
VESSEL (EMPTY)	31,000
CARBON (PER VESSEL)	40,000
VESSEL (OPERATING)	191,000
SYSTEM (EMPTY)	69,000
SYSTEM (OPERATING)	391,000

	PIPE SUPPORT SCHEDULE		
#	DRAWING NO.	DESCRIPTION	QTY.
PS-1	90160401	4" CARBON FILL 4" CARBON DISCHARGE (UPPER)	6
PS-2	90130162	8" INFLUENT	2
PS-3	90130158	4" CARBON DISCHARGE	2

PLAN

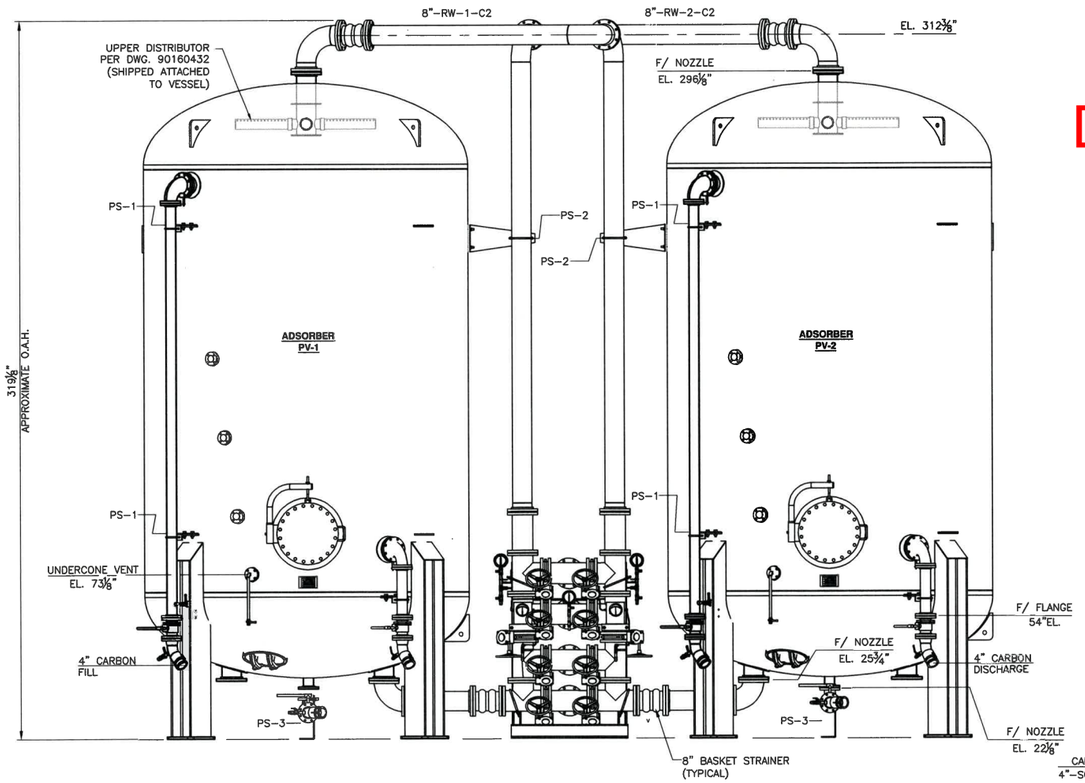

ELEVATION

ANCHOR BOLT PLAN

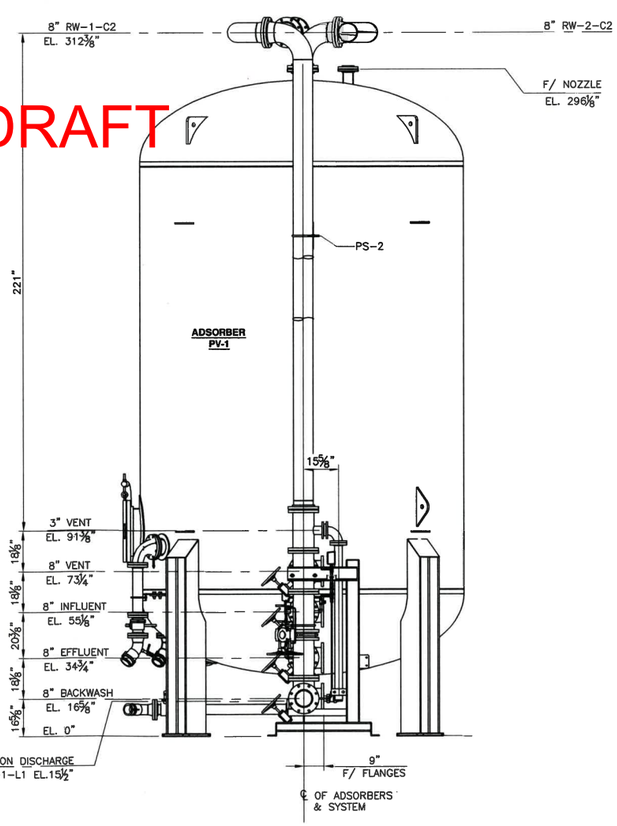

VIEW A-A

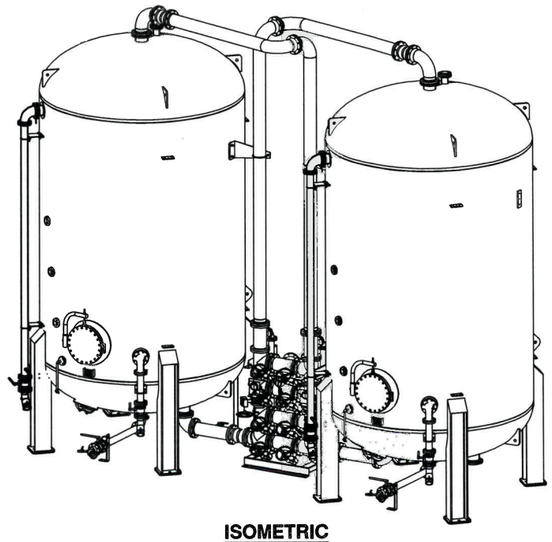

ISOMETRIC

DRAFT

REV	DESCRIPTION	APP	DATE
0	ISSUED FOR FABRICATION	MA	5/31/17

REVISIONS

TOLERANCES (unless otherwise specified)

ANGULAR	±0°30'	DECIMAL (2 PLACES)	±.010
FRACTIONAL	±1/16"	DECIMAL (3 PLACES)	±.005
DECIMAL (1 PLACE)	±.015	DECIMAL (4 PLACES)	±.0005

THIS DRAWING AND DESIGN IS THE PROPERTY OF CALGON CARBON CORPORATION AND IS NOT TO BE REPRODUCED IN WHOLE OR IN PART NOR EMPLOYED FOR ANY PURPOSE OTHER THAN SPECIFICALLY PERMITTED IN WRITING BY CALGON CARBON CORPORATION. THIS DRAWING LOANED SUBJECT TO RETURN ON DEMAND.

	NAME	DATE
DRAFTER	JFS	5/9/17
DESIGNER		
CHECKER	M. ANTONETTI	5/24/17
APPROVAL		
PROJECT No.	STANDARD	

CalgonCarbon

CLIENT: STANDARD

TITLE: MODULAR ADSORBER SYSTEM MODEL 12-40, 8" PIPING GENERAL ARRANGEMENT

DWG. Size	SHEET No.	SCALE
D	1 OF 1	NONE

DWG. No. 90110100 REV. 0

V:\Products\Carbon\Model 12-40\General Arrangement\90110100 M12-40 GA.dwg Jun 01, 2017 - 2:51pm

west virginia department of environmental protection

Division of Water and Waste Management
601 57th Street SE
Charleston, WV 25304
Phone: 304-926-0495/Fax: 304-926-0463

Harold D. Ward, Cabinet Secretary
dep.wv.gov

April 19, 2022

Scott Saunders, General Manager
PNGI Charles Town Gaming, LLC
c/o Hollywood Casino at Charles Town Races
PO Box 551
Charles Town, WEV 25414

RE: WV/NPDES Permit Application
No. WV0105856, Jefferson County

Dear Sir or Madam:

Your forms for WV/NPDES Individual Permit have been found to be complete.

For your information, the public notice period prescribed in Title 47, Series 10, Section 12.1.b of the West Virginia Legislative Rules issued pursuant to Chapter 22, Article 11 commences on the 27th day of April, 2022 in the *Spirit of Jefferson.*

Within twenty (20) days after publication of the public notice, you are required to send to the Office a certificate of publication. This should be sent to:

Director, Division of Water and Waste Management, DEP
Permitting Section
601 57th Street, SE
Charleston, WV 25304-2345
Attention: Lori Devereux

Enclosed are copies of your draft permit, any required fact sheet and the public notice. If you have any questions, please do not hesitate to contact this office at 304-926-0495.

Sincerely,

Lori Devereux
NPDES Team

Enclosures

STATE OF WEST VIRGINIA
DEPARTMENT OF ENVIRONMENTAL PROTECTION
DIVISION OF WATER AND WASTE MANAGEMENT

PUBLIC NOTICE

WEST VIRGINIA DEPARTMENT OF ENVIRONMENTAL PROTECTION'S, PUBLIC INFORMATION OFFICE, 601 57TH STREET, CHARLESTON SE, WEST VIRGINIA 25304-2345 TELEPHONE: (304) 926-0440.

APPLICATION FOR A WEST VIRGINIA NATIONAL POLLUTANT DISCHARGE ELIMINATION SYSTEM WATER POLLUTION CONTROL PERMIT

Public Notice No.: L-40-22 **Public Notice Date:** April 27, 2022

Paper: *Spirit of Jefferson*

The following has applied for a WV NPDES Water Pollution Control Permit for this facility or activity:

Appl. No.: WV0105856

Applicant: PNGI CHARLES TOWN GAMING, LLC
C/O HOLLYWOOD CASINO AT CHARLES TOWN RACES
PO BOX 551
CHARLES TOWN, WV 25414

Location: CHARLES TOWN, JEFFERSON COUNTY

Latitude: 39:18:37 **Longitude:** 77:50:28

Receiving Stream:
Flowing Springs Run

Activity:
To operate and maintain an existing wastewater collection system and an existing 0.25 million gallons per day wastewater treatment plant. These facilities are to serve Phase IV - Area V Gaming Area (approximately 7,500 customers and 250 employees), horse washing facilities, the Charles Town Inn with 150 rooms, Facility Hotel with 500 rooms and a 250-seat restaurant, a future 150-room hotel, and the Shenandoah Downs Property Allowance (400-room hotel and two150-seat restaurants) at the Hollywood Casino at Charles Town Races facility, and discharge treated wastewater through Outlet No. 001 to Flowing Springs Run, approximately 5.4 miles from its mouth, of Shenandoah River of the Potomac River. An antidegradation review was performed. Tier 1 protection is provided for the uses specified in Title 47, Series 2, Section 6. Also, to incorporate the requirements relative to Title 33, Series 2 of the West Virginia Legislative Rules, for the processing and disposal of sewage sludge generated by the wastewater treatment plant. Sewage sludge generated and/or processed at the permittee's facility shall be transported offsite by a certified septage hauler. To implement the requirements of the Chesapeake Bay Total Maximum Daily Load.

Business conducted:
Thoroughbred Racetrack and Gaming Facility

Implementation:
N/A

On the basis of review of the application, the "Water Pollution Control Act (Chapter 22, Article 11-8(a))," and the "West Virginia Legislative Rules," the State of West Virginia will act on the above application.

Any interested person may submit written comments on the draft permit and may request a public hearing

by addressing such to the Director of the Division of Water and Waste Management within 30 days of the date of the public notice. Such comments or requests should be addressed to:

Director, Division of Water and Waste Management, DEP
ATTN: Lori Devereux, Permitting Section
601 57th Street SE
Charleston, WV 25304-2345

The public comment period begins April 27, 2022 and ends May 27, 2022.

Comments received within this period will be considered prior to acting on the permit application. Correspondence should include the name, address and the telephone number of the writer and a concise statement of the nature of the issues raised. The Director shall hold a public hearing whenever a finding is made, on the basis of requests, that there is a significant degree of public interest on issues relevant to the Draft Permit(s). Interested persons may contact the public information office to obtain further information.

The application, draft permit and any required fact sheet may be inspected, by appointment, at the Division of Water and Waste Management Public Information Office, at 601 57th Street SE, Charleston, WV 25304-2345, between 8:00 a.m. and 4:00 p.m. on business days.

STATE OF WEST VIRGINIA
DEPARTMENT OF ENVIRONMENTAL PROTECTION
DIVISION OF WATER AND WASTE MANAGEMENT
601 57TH STREET SE
CHARLESTON, WV 25304-2345

NATIONAL POLLUTANT DISCHARGE ELIMINATION SYSTEM
WATER POLLUTION CONTROL PERMIT

NPDES PERMIT NO.: WV0105856
SUBJECT: Sewage

ISSUE DATE:
EFFECTIVE DATE :
EXPIRATION DATE:
SUPERSEDES: Permit No. WV0105856 dated May 17, 2018

LOCATION:	CHARLES TOWN	Jefferson	Shenandoah River 2
	(City)	**(County)**	**(Drainage Basin)**

See the next page for a list of Outlets.

TO WHOM IT MAY CONCERN:

This is to certify that: PNGI CHARLES TOWN GAMING, LLC
C/O HOLLYWOOD CASINO AT CHARLES TOWN RACES
PO BOX 551
CHARLES TOWN, WV 25414

is hereby granted a West Virginia NPDES Water Pollution Control Permit to:
operate and maintain an existing wastewater collection system and an existing 0.25 million gallons per day sequential batch reactor wastewater treatment plant which are further described underneath.

The wastewater collection system is comprised of approximately 10 linear feet of 10 inch diameter gravity sewer line, nine (9) linear feet of 12 inch diameter gravity sewer line, two (2) manholes, three (3) lift stations, 4,720 linear feet of six (6) inch diameter force main line, and all requisite appurtenances.

The wastewater treatment plant is comprised of an influent screw screen, a triplex headworks pump station, two (2) sequential batch reactors basins with a volume of 125,000 gallons each which function as an integral clarifier, one (1) filter unit with two (2) filter elements, ultraviolet disinfection, two (2) 12 feet in diameter post aeration basins that will also serve for potential future plant expansion, chemical feed equipment, one (1) aerobic digester with a volume of 278,000 gallons, and all requisite appurtenances.

These facilities are to serve Phase IV-Area V Gaming Area (approximately 7,500 customers and 250 employees), horse washing facilities, the Charles Town Inn with 150 rooms, Facility Hotel with 500 rooms and a 250-seat restaurant, a future 150-room hotel, and the Shenandoah Downs Property Allowance (400-room hotel and two150-seat restaurants) at the Hollywood Casino at Charles Town Races facility, and discharge treated wastewater through Outlet No. 001 to Flowing Springs Run, approximately 5.4 miles from its mouth, of the Shenandoah River of the Potomac River.

This permit is subject to the following terms and conditions :
The information submitted on, and with, Permit Application No. WV0105856, dated the 4th day of February 2022, is all hereby made terms and conditions of this permit with like effect as if all such permit application information were set forth herein, and with other conditions set forth in Sections A, B, C, D, and E, and Appendix A.

The validity of this permit is contingent upon the payment of the applicable annual permit fee, as required by Chapter 22, Article 11, Section 10 of the Code of West Virginia.

Inspectable Unit	Latitude	Longitude	Receiving Stream	Dist. to Stream Mouth (in Mile)	Milepost
001	39°18'37"	77°50'28"	FLOWING SPRINGS RN	5.4	N/A

A.001 DISCHARGE LIMITATIONS AND MONITORING REQUIREMENTS:

Permit Limits

During the period beginning effective date of permit and lasting through midnight expiration date of permit the permittee is authorized to discharge from Outlet Number(s) 001 (Sanitary)

Such discharges shall be limited and monitored by the permittee as specified below:

Effluent Characteristic	Discharge Limitations							Monitoring Requirements	
	Quantity		Units		Other Units		Units	Measurement Frequency	Sample Type
50050 - (Flow,in Conduit or thru plant) (Year Round) (ML-1) (RF-A)	Rpt Only Monthly Total	N/A	Mill. Galls/Mon	Rpt Only Minimum	0.25 Avg. Monthly	Rpt Only Max. Daily	mgd	Continuous	measured
See Section E for additional information									
00310 - (BOD, 5-Day 20 Deg.C) (Year Round) (ML-B) (RF-A)	10.4 Avg. Monthly	20.8 Max. Daily	Lbs/Day	N/A	5 Avg. Monthly	10 Max. Daily	mg/l	1/month	Batch
00530 - (Total Suspended Solids) (Year Round) (ML-A) (RF-A)	63 Avg. Monthly	126 Max. Daily	Lbs/Day	N/A	30 Avg. Monthly	60 Max. Daily	mg/l	1/month	Batch
81010 - (BOD, % Removal) (Year Round) (ML-K) (RF-A)	N/A	N/A	N/A	85 Month. Avg. Min.	N/A	N/A	Percent	1/month	Calculated
81011 - (Suspended Solids, % Remova (Year Round) (ML-K) (RF-A)	N/A	N/A	N/A	85 Month. Avg. Min.	N/A	N/A	Percent	1/month	Calculated
74055 - (Coliform, Fecal) (Year Round) (ML-A) (RF-A)	N/A	N/A	N/A	N/A	200 Mon. Geo. Mean	400 Max. Daily	Cnts/100ml	1/month	Grab
00400 - (pH) (Year Round) (ML-A) (RF-A)	N/A	N/A	N/A	6 Inst. Min.	N/A	9 Inst. Max.	S.U.	1/month	Grab
00300 - (Dissolved Oxygen) (Year Round) (ML-A) (RF-A)	N/A	N/A	N/A	7.25 Minimum	N/A	N/A	mg/l	1/month	Grab

Samples taken in compliance with the monitoring requirements specified above shall be taken at the following location(s):
Effluent BOD5 samples shall be collected at a location immediately preceding disinfection. All other effluent samples shall be collected at, or as near as possible to, the point of discharge.

This discharge shall comply with Appendix A - I MANAGEMENT CONDITIONS I - 12.

A.001 DISCHARGE LIMITATIONS AND MONITORING REQUIREMENTS:

Permit Limits

During the period beginning effective date of permit and lasting through midnight expiration date of permit the permittee is authorized to discharge from Outlet Number(s) 001 (Sanitary)

Such discharges shall be limited and monitored by the permittee as specified below:

Effluent Characteristic	Discharge Limitations							Monitoring Requirements	
	Quantity		Units		Other Units		Units	Measurement Frequency	Sample Type
00610 - (Ammonia Nitrogen) (Year Round) (ML-A) (RF-A)	3.1 Avg. Monthly	6.2 Max. Daily	Lbs/Day	N/A	1.5 Avg. Monthly	3 Max. Daily	mg/l	1/month	Batch
00600 - (Nitrogen, Total (as N)) (Year Round) (ML-A) (RF-D)	N/A	3805 Annual Total	Lbs/Year	N/A	N/A	N/A	N/A	1/year	Calculated
See Section E for additional information									
00600 - (Nitrogen, Total (as N)) (Year Round) (ML-A) (RF-A)	Rpt Only Monthly Total	N/A	Lbs/Month	N/A	Rpt Only Avg. Monthly	Rpt Only Max. Daily	mg/l	1/month	Batch
See Section E for additional information									
00665 - (Phosphorus, Total) (Year Round) (ML-A) (RF-D)	N/A	380 Annual Total	Lbs/Year	N/A	N/A	N/A	N/A	1/year	Calculated
See Section E for additional information									
00665 - (Phosphorus, Total) (Year Round) (ML-A) (RF-A)	Rpt Only Monthly Total	N/A	Lbs/Month	N/A	Rpt Only Avg. Monthly	Rpt Only Max. Daily	mg/l	1/month	Batch
See Section E for additional information									
01119 - (Copper, Total Recoverable) (Year Round) (ML-A) (RF-A)	N/A	N/A	N/A	N/A	0.017 Avg. Monthly	0.039 Max. Daily	mg/l	1/month	Batch
01114 - (Lead, Total Recoverable) (Year Round) (ML-A) (RF-D)	N/A	N/A	N/A	N/A	Rpt Only Avg. Monthly	Rpt Only Max. Daily	mg/l	1/year	Batch
01094 - (Zinc, Total Recoverable) (Year Round) (ML-A) (RF-D)	N/A	N/A	N/A	N/A	Rpt Only Avg. Monthly	Rpt Only Max. Daily	mg/l	1/year	Batch

Samples taken in compliance with the monitoring requirements specified above shall be taken at the following location(s):
Effluent BOD5 samples shall be collected at a location immediately preceding disinfection. All other effluent samples shall be collected at, or as near as possible to, the point of discharge.

This discharge shall comply with Appendix A - I MANAGEMENT CONDITIONS I - 12.

A.001 DISCHARGE LIMITATIONS AND MONITORING REQUIREMENTS:

Permit Limits

During the period beginning effective date of permit and lasting through midnight expiration date of permit the permittee is authorized to discharge from Outlet Number(s) 001 (Sanitary)

Such discharges shall be limited and monitored by the permittee as specified below:

Effluent Characteristic	Discharge Limitations							Monitoring Requirements	
	Quantity		Units		Other Units		Units	Measurement Frequency	Sample Type
00900 - (Hardness, Total (as CaCO3)) (Year Round) (ML-5) (RF-C)	N/A	N/A	N/A	N/A	Rpt Only Avg. Monthly	Rpt Only Max. Daily	mg/l	1/6 months	Grab
Refer to Section C.21									
00980 - (Iron, Total Recoverable) (Year Round) (ML-A) (RF-A)	N/A	N/A	N/A	N/A	0.62 Avg. Monthly	1.82 Max. Daily	mg/l	1/month	Batch
00940 - (Chloride (as Cl)) (Year Round) (ML-A) (RF-A)	N/A	N/A	N/A	N/A	250 Avg. Monthly	383 Max. Daily	mg/l	1/month	Batch

Samples taken in compliance with the monitoring requirements specified above shall be taken at the following location(s):
Effluent BOD5 samples shall be collected at a location immediately preceding disinfection. All other effluent samples shall be collected at, or as near as possible to, the point of discharge.

This discharge shall comply with Appendix A - I MANAGEMENT CONDITIONS I - 12.

B. SCHEDULE OF COMPLIANCE

1. **The permitee shall achieve compliance with the provisions for waste treatment and the monitoring requirements specified in the permit in accordance with the following schedule :**

   Effective date of permit.

2. **Reports of compliance or non-compliance with, and progress reports on interim and final requirements contained in the above compliance schedule, if any, shall be postmarked no later than 14 days following each schedule date.**

Section C - Other Requirements

1. The herein-described treatment works, structures, electrical and mechanical equipment shall be adequately protected from physical damage by the maximum expected one hundred (100) year flood level, and operability shall be maintained during the twenty-five (25) year flood level.
2. The entire sewage treatment facility shall be adequately protected by fencing.
3. The proper operation and maintenance of the listed sewage treatment facility shall be performed, or supervised, by a certified operator possessing at least a Class I - Advanced certificate for Wastewater System Operators, as issued by the State of West Virginia. The on-site attendance of this facility's Class I - Advanced operator shall be determined, and directed, by the Bureau for Public Health, Office of Environmental Health Services.
4. The arithmetic mean of values for effluent samples collected in a period of seven (7) consecutive days shall not exceed 45.0 mg/l for Total Suspended Solids (TSS). Furthermore, the permittee may submit mitigating factors as an attachment to its Discharge Monitoring Report (DMR) related to an excursion of this requirement. The Director may choose to take those mitigating factors into consideration in determining whether enforcement action is required.
5. The permittee shall submit monthly according to the enclosed format, a Discharge Monitoring Report (DMR) indicating in terms of concentration and/or quantities the values of the constituents listed in Section A analytically determined to be in the plant effluent(s). Additional information pertaining to effluent monitoring and reporting can be found in Appendix A, Part III.
6. The required DMRs shall be received by the agency no later than 25 days following the end of the reporting period in accordance with the following requirements.
   a. The agency is now requiring the permittee to utilize our electronic DMR (eDMR) system which is now mandatory.
   b. The permittee is not required to submit hard copies of the DMRs to the addresses listed below when using eDMR. Special circumstances may result in the agency granting an exemption to eDMR and are considered on case by case basis. If the permittee was exempted by the agency from using the eDMR system, then the permittee is required to send hard copies to the addresses below. The permittee may contact the agency for more information about the eDMR system and potential exemptions from using it.

      Director
      Division of Water and Waste Management
      601 57th Street SE
      Charleston, West Virginia 25304-2345
      Attention: Permitting Program

      Department of Environmental Protection
      Environmental Enforcement
      22288 Northwestern Pike
      Romney, West Virginia 26757-8005

   c. Regardless, in accordance with Appendix A, Section III.6 of this permit, the permittee shall maintain copies of DMRs (either hard copies or electronic copies) at the plant site and the DMRs shall be made readily available upon request from DEP personnel.
7. The permittee shall not use alternate DMRs without prior approval from this agency.
8. In conjunction with all other reporting requirements of this permit, copies of all future correspondence regarding this permit will be forwarded to the Environmental Inspector and Environmental Inspector Supervisor at the following address:

   Department of Environmental Protection
   Environmental Enforcement
   22288 Northwestern Pike
   Romney, West Virginia 26757-8005
9. The average daily design flow of the wastewater treatment works discharging through Outlet No. 001 has been established at 0.25 million gallons per day. When the average monthly effluent flow reported on the Discharge Monitoring Reports reaches, or exceeds, 90 percent of the average design flow, (0.225 million gallons per day for Outlet No. 001) during three (3) consecutive monthly periods, the permittee shall submit a Plan of Action for that outlet to the Director. The Plan of Action shall present, at a minimum, an analysis of current hydraulic and organic loadings on the plant, an analysis of the future projected loadings, and a Schedule of Tasks to accomplish procedures necessary to maintain required treatment levels.

Section C - Other Requirements

10. Any future collection system extensions projected to cause an increase in the wastewater flow, equal to, or greater than, 12,500 gallons per day for Outlet No. 001 (five (5) percent of average design flow) shall require the permittee to contact the Director to secure approval of the extension. After consideration of the complexity of the project, and the available treatment capacity of the facility, the Director may require the permittee to seek the extension approval through Modification of the Permit.
11. Over the term of this permit, the permittee is allowed one (1) excursion of the maximum daily fecal coliform effluent limitation as prescribed in Section A.001. The number of allowed excursions is based upon one (1) percent of the number of required self-monitoring events. Utilization of the excursion allowance is conditioned as follows:
    a. Excursion allowances are afforded only to self-monitoring results and only when self-monitoring activities assess compliance with the maximum daily effluent limitation by analysis of an individual grab sample. No excursion allowance can be applied to analytical results obtained by representatives of the Director in the performance of their compliance assessment activities. Additionally, representatives of the Director may assess compliance with the maximum daily effluent limitation by collection and analysis of an individual grab sample.
    b. The excursion allowance is contingent upon the permittee's prompt return to compliance as evidenced by the next required fecal coliform self-monitoring event.
    c. The result for which an excursion allowance is claimed shall be included in the calculation of the average monthly effluent value.
    d. Should an excursion allowance be utilized by the permittee, said allowance must be reported as an attachment to the Discharge Monitoring Report. This attachment should state that an excursion allowance was taken in accordance with the conditions outlined above.
12. The permittee shall be required to test the sewage treatment plant's influent in order to calculate the percent (%) removal parameters for five (5) day Biochemical Oxygen Demand (BOD5) and TSS contained in Section A.001 of this permit. Influent sampling requirements include:
    a. Percent removal shall be defined as a percentage expression of the removal efficiency across the wastewater treatment plant for a given pollutant parameter, as determined from the thirty day average values of the influent concentrations to the facility and the thirty day average effluent pollutant concentrations. Only influent and effluent samples taken concurrently as specified below shall be used for reporting.
    b. Influent BOD5 and TSS samples shall be collected once per month (1/month) for the wastewater treatment facility.
    c. The permittee shall collect representative BOD5 and TSS influent samples using their established sampling procedures over an established time period.
    d. Influent BOD5 and TSS sampling shall be performed over the same time period as the effluent BOD5 and TSS sampling.
13. Because the permittee is using ultraviolet light as their disinfection method, no Total Residual Chlorine (TRC) effluent limitation shall currently be imposed. Should the permittee in the future decide to use chlorine as a disinfection method, a TRC effluent limitation shall be promulgated and imposed.
14. The sampling and analysis required herein, and as prescribed in Section A.001 of this permit shall be conducted in accordance with sample collection, preservation, and analytical procedures specified in 40 CFR Part 136. The permittee shall assure that the test procedures being utilized have an appropriate method detection level (MDL) for each parameter. Parameters shall be analyzed using the most sensitive methods and detection levels commercially available and economically feasible with test procedures having MDLs below, or as close as possible to, the water quality standard for said parameters. The following methods are to be used unless the permittee desires to use an Environmental Protection Agency (EPA) approved test method with a listed lower MDL. Regardless, it is recognized that detection levels can vary from analysis to analysis and that nondetect results at a different MDL for the specified test method would not constitute a permit violation.

Section C - Other Requirements

14.

Parameter	EPA Method No.	Method Detection Level (ug/l)
Copper, Total Recoverable	200.8	0.5
Lead, Total Recoverable	200.8	0.6
Zinc, Total Recoverable	200.8	1.8
Iron, Total	200.7	30
Chloride	300.0	20

15. In incidences where a specific test method is not defined, the permittee shall utilize an EPA approved method with a method detection limit (MDL) sensitive enough to confirm compliance with the permit effluent limit for that parameter. If a MDL is not sensitive enough to confirm compliance, the most sensitive approved method must be used. If a more sensitive EPA approved method becomes available, that method shall be used. Should the current and/or new method not be sensitive enough to confirm compliance with the permitted effluent limit, analytical results reported as "not detected" at the MDL of the most sensitive method available will be deemed compliant for purposes of permit compliance. Results shall be reported on the Discharge Monitoring Reports as a numeric value less than the MDL.

16. Any "not detected (ND)" results by the permittee must be "ND" at the method detection limit (MDL) for the test method used for that parameter and must be reported as less than the MDL used. The permittee may not report the result as zero, "ND", or report the result as less than a minimum level (ML), reporting limit (RL), or practical quantitation limit (PQL).

    When averaging values of analytical results for DMR reporting purposes for monthly averages, the permittee should use actual analytical results when these results are greater than or equal to the MDL and should use zero (0) when these results are less than the MDL. If all analytical results are non-detect at the MDL (<MDL), then the permittee should use the actual MDL in the calculation for averaging and report the result as less than the average calculation.

17. Unless otherwise authorized under Section A of this permit, any discharge from any point other than a permitted treatment plant outfall is expressly prohibited. In the event there is a prohibited discharge from a sewer conveyance system or a treatment plant bypass, the permittee shall follow the reporting requirements contained in Appendix A, Part IV, Section 2.

18. Because of the Sequential Batch Reactor technology being utilized by the permittee, "Batch" samples shall be collected for Outlet No. 001. "Batch" sampling procedures shall be defined as the collection and compositing of one (1) grab sample from each individual batch discharge cycle during a 24-hour period.

19. This permit authorizes the treatment of domestic sewage only. The treatment of any nondomestic wastes is expressly prohibited.

20. The permittee shall perform a daily inspection of the ultraviolet disinfection facilities. A written log recording the date of the inspection, the name of the individual performing the inspection, any deficiencies, and any corrective action implemented shall be maintained. The log shall be maintained at the site and available for review by Division personnel.

21. A Total Hardness sample is to be collected from the receiving stream at a point immediately upstream of, and outside the influence of, the effluent discharge.

Section D - Sewage Sludge Management Requirements

1. The permittee shall remove sewage sludge from its system only by a septage hauler certified and registered under either General Permit No. WVSG10000 for land application of sewage sludge or General Permit No. WVSG20000 for disposal of sewage sludge at a wastewater treatment facility.
2. Should the permittee choose to use any sewage sludge disposal method other than the method listed in Section D.1 above, they must obtain prior approval of that method from the Director of this Division.
3. Upon authorization of coverage under this permit, the permittee shall have fulfilled the requirements of Appendix A, Part II, Section 5, of this Permit, with respect to the sludge generated by the wastewater treatment facilities permitted herein and compliance with the terms and conditions of the approved Sewage Sludge Management Practices shall become incorporated herewith.
4. The permittee shall monitor and report annually on the enclosed Sewage Sludge Management Report form the quality and quantity of sewage sludge produced. The required report shall be received by the agency no later than 25 days following the end of the reporting period and in accordance with the following requirements.
   a. The agency is now requiring the permittee to utilize our electronic DMR (eDMR) system which is now mandatory.
   b. The permittee is not required to submit hard copies of the DMRs to the addresses listed below when using eDMR. Special circumstances may result in the agency granting an exemption to eDMR and are considered on case by case basis. If the permittee was exempted by the agency from using the eDMR system, then the permittee is required to send hard copies to the addresses below. The permittee may contact the agency for more information about the eDMR system and potential exemptions from using it.

```
Director                                    Department of Environmental Protection
Division of Water and Waste Management      Environmental Enforcement
601 57th Street SE                          22288 Northwestern Pike
Charleston, West Virginia  25304-2345       Romney, West Virginia 26757-8005
Attention: Permitting Program
```

   c. Regardless, in accordance with Appendix A, Section III.6 of this permit, the permittee shall maintain copies of DMRs (either hard copies or electronic copies) at the plant site and the DMRs shall be made readily available upon request from DEP personnel.
5. In conjunction with all other reporting requirements of this permit, generated hard copies of all future correspondence regarding this permit, including hard copies, if applicable, of Sewage Sludge Management Reports, and Sewage Sludge Monitoring Reports, will be forwarded to the Environmental Inspector and Environmental Inspector Supervisor at the following address:

```
Department of Environmental Protection
Environmental Enforcement
22288 Northwestern Pike
Romney, West Virginia  26757-8005
```

6. The permittee shall submit the Sewage Sludge Management Report form for each monitoring period listed below according to the following due dates:

Monitoring Period	Sewage Sludge Management Report Due Dates
January 1 - December 31	January 25

7. The permittee shall maintain all records and reports of all monitoring required by Section D of this permit for five (5) years after the date of monitoring or reporting. Records should include copies of all required reports; and records of all data used to complete these reports.

Section E - Nutrient Requirements

1. As a headwater partner in the Chesapeake Bay Program, the United States Environmental Protection Agency (EPA) has developed a Total Maximum Daily Load (TMDL) mandating reductions in the amount of nutrients (nitrogen and phosphorous) flowing into the Chesapeake Bay. In accordance with the Chesapeake Bay TMDL, the following requirements apply to the permittee:
   a. The permittee has an existing facility that has an average design flow of 0.250 MGD. Nitrogen and phosphorous permit limitations are based on concentrations of 5 mg/l and 0.5 mg/l, respectively.
   b. The Chesapeake Bay Total Maximum Daily Load (TMDL) provides individual total nitrogen and total phosphorus wasteload allocations of 3,805 pounds per year and 380 pounds per year, respectively.
2. Permit limitations for total nitrogen and total phosphorous are being implemented on an Annual Total Load basis. The Annual Total Load Limitations shall be attained in accordance with the following:
   a. The Division recognizes there is not an EPA approved method to directly test for Total Nitrogen. The Total Nitrogen value to be reported on the permittee's Discharge Monitoring Reports (DMRs) shall be the sum of the following parameters:

      Total Kjeldahl Nitrogen, Nitrate and Nitrite.

      1) If all three (3) constituents of total nitrogen are not detected at its MDL, the permittee shall sum the actual MDLs for each constituent and report the result as less than the calculation.
      2) When calculating the sum of the constituents for total nitrogen, the permittee shall use actual analytical results when these results are greater than or equal to the MDL for a particular constituent and should use zero (-0-) for a constituent if one (1) or two (2) of the constituents are less than the MDL.

   b. Effluent monitoring for the following pollutants shall be conducted using the most sensitive methods and detection levels commercially available and economically feasible. The following methods and detection levels are recommended to be used unless the permittee desires to use an EPA approved method with a lower detection level:

Parameter	EPA Method No.	Method Detection Limit (mg/l)
Total Kjeldahl Nitrogen	351.2	0.05
Nitrate Nitrogen	300.0	0.002
Nitrite Nitrogen	300.0	0.004
Total Phosphorous	365.4	0.01

      Any "not detected (ND)" results by the permittee must be "ND" at the MDL for the test method used for that parameter and must be reported as less than the MDL used (See Section E.3.a for nitrogen). The permittee may not report the result as zero, "ND", or report the result as less than a minimum level (ML), reporting limit (RL), or practical quantitation limit (PQL).

   c. The permittee shall collect appropriate samples, as identified in Section A, for total phosphorous and for each constituent of total nitrogen. All sampling shall be collected concurrently and shall be representative of normal operations.

   d. The actual total (not the average) monthly flow shall be used in conjunction with the average monthly total nitrogen and average monthly total phosphorous concentration results in order to determine the total monthly mass results for DMR reporting purposes.

      [Total Flow Discharged in Month (Million Gallons per Month)] * [Average Monthly Nutrient Concentration (mg/l)] * [8.34] = Monthly Load (lbs/month)

   e. The sum of the total monthly mass results for total nitrogen and total phosphorous for Outlet No 001 shall not exceed the following annual mass limitations for any year.

Section E - Nutrient Requirements

2. e.

Parameter	Outlet No. 001
Total Nitrogen	3,805 lbs/yr
Total Phosphorous	380 lbs/yr

f. As a guideline, the permittee shall measure its monthly performance to determine if operations will achieve the annual total load limits. If the total monthly load exceeds 317 lbs/month for nitrogen or 32 lbs/month for phosphorous for Outlet No. 001, the permittee shall submit written documentation which explains the elevated monthly totals and the rationale for ensuring that the annual loads will still be achieved in future months.

3. In accordance with the Chesapeake Bay TMDL, no additional loading of the appropriate pollutants can be introduced into the Chesapeake Bay. Therefore, any future expansion of the wastewater treatment plant beyond the existing design flow of 0.250 million gallons per day shall require the permittee to obtain offsets. Said offsets shall be submitted to the Director for approval, and the permit subsequently modified prior to any expansion. At present, no trading or offset program has been established by the state. Proposals will continue to be evaluated on a case-by-case basis until a trading and/or offset program has been established.

4. The annual monitoring period for total nitrogen and total phosphorous is prescribed as July 1st through June 30th of each year. As such, the permittee shall report the total annual mass load for total nitrogen and total phosphorous based on monthly totals from July 1st through June 30th on its June DMR.

5. The permittee shall submit an annual report on, or before, August 1 each year which summarizes the following information.

a. The permittee shall summarize the previous year's nutrient data. This may be accomplished in letter form and shall include all calculations of the year's mass loadings reported. In general, this report shall include a table depicting the monthly loadings discharged for the previous year as well as an assessment of compliance with the nitrogen and phosphorus annual limitations in Section A.001.

b. For the purpose of this condition, a year is defined as July 1st through June 30th.

The herein-described activity is to be extended, modified, added to, made, enlarged, acquired, constructed or installed, and operated, used and maintained strictly in accordance with the terms and conditions of this permit, with the plans and specifications submitted with Permit Application No. WV0105856; with the plan of maintenance and method of operation thereof submitted with such application(s); and with any applicable rules and regulations promulgated by the Environmental Quality Board and the Secretary of the Department of Environmental Protection.

Failure to comply with the terms and conditions of this permit, with the plans and specifications submitted with Permit Application No. WV0105856; and with the plan of maintenance and method of operation thereof submitted with such application(s) shall constitute grounds for the revocation or suspension of this permit and the invocation of all the enforcement procedures set forth in Chapter 22, Article 11, or 15 of the Code of West Virginia.

This permit is issued in accordance with the provisions of Chapter 22, Article 11 and 12 and/or 15 of the Code of West Virginia and is transferable under the terms of Section 11 of Article 11.

_____

Katheryn Emery, P.E., Director

Appendix A

I. MANAGEMENT CONDITIONS:

1. Duty to Comply

a) The permittee must comply with all conditions of this permit. Permit noncompliance constitutes a violation of the CWA and State Act and is grounds for enforcement action; for permit modification, revocation and reissuance, suspension or revocation; or for denial of a permit renewal application.

b) The permittee shall comply with all effluent standards or prohibitions established under Section 307(a) of the CWA for toxic pollutants within the time provided in the regulations that establish these standards or prohibitions, even if the permit has not yet been modified to incorporate the requirement.

2. Duty to Reapply

If the permittee wishes to continue an activity regulated by this permit after the expiration date of this permit, the permittee must apply for a new permit at least 180 days prior to expiration of the permit.

3. Duty to Mitigate

The permittee shall take all reasonable steps to minimize or prevent any discharge in violation of this permit, which has a reasonable likelihood of adversely affecting human health or the environment.

4. Permit Actions

This permit may be modified, revoked and reissued, suspended, or revoked for cause. The filing of a request by the permittee for permit modification, revocation and reissuance, or revocation, or a notification of planned changes or anticipated noncompliance, does not stay any permit condition.

5. Property Rights

This permit does not convey any property rights of any sort or any exclusive privilege.

6. Signatory Requirements

All applications, reports, or information submitted to the Director shall be signed and certified as required in Title 47, Series 10 , Section 4.6 of the West Virginia Legislative Rules.

7. Transfers

This permit is not transferrable to any person except after notice to the Director. The Director may require modification or revocation and reissuance of the permit to change the name of the permittee and incorporate such other requirements as may be necessary.

8. Duty to Provide Information

The permittee shall furnish to the Director, within a reasonable specified time, any information which the Director may request to determine whether cause exists for modifying, revoking and reissuing, suspending, or revoking this permit, or to determine compliance with this permit. The permittee shall also furnish to the Director, upon request, copies of records required to be kept by this permit.

9. Other Information

Where the permittee becomes aware that it failed to submit any relevant facts in a permit application, or submitted incorrect information in a permit application or in any report to the Director, it shall promptly submit such facts or information.

10. Inspection and Entry

The permittee shall allow the Director, or an authorized representative, upon the presentation of credentials and other documents as may be required by law, to:

a) Enter upon the permittee's premises in which an effluent source or activity is located, or where records must be kept under the conditions of this permit;

b) Have access to and copy at reasonable times, any records that must be kept under the conditions of this permit;

c) Inspect at reasonable times any facilities, equipment (including monitoring and control equipment), practices, or operations regulated or required under this permit; and

d) Sample or monitor at reasonable times, for the purposes of assuring permit compliance or as otherwise authorized by the State Act, any substances or parameters at any location.

11. Permit Modification

This permit may be modified, suspended, or revoked in whole or in part during its term in accordance with the provisions of Chapter 22-11-12 of the Code of West Virginia.

12. Water Quality

This discharge shall not cause or materially contribute to: distinctly visible floating or settable solids, suspended solids, scum, foam or oily slicks; deposits or sludge bank on the bottom; odors in the vicinity of the waters; taste or odor that would adversely affect the designated uses of the affected waters; distinctly visible color which may impair or interfere with the designated uses of the affected waters; and shall not cause a fish or mussel kill. The limitations and conditions in this permit for the discharges identified in this permit are limitations and conditions that are necessary to meet applicable West Virginia water quality standards, Requirements Governing Water Quality Standards 47 CSR 2.

13. Outlet Markers

A permanent marker at the establishment shall be posted in accordance with Title 47, Series 11, Section 9 of the West Virginia Legislative Rules.

14. Liabilities

a) Any person who violates a permit condition implementing sections 301, 302, 306, 307, 308, 318, or 405 of the Clean Water Act is subject to a civil penalty not to exceed $25,000 per day of such violation. Any person who willfully or negligently violates permit conditions implementing sections 301, 302, 306, 307, 308 or 405 of the Clean Water Act is subject to a fine of not less than $2,500 nor more than $25,000 per day of violation, or by imprisonment for not more than 1 year, or both.

b) Any person who falsifies, tampers with, or knowingly renders inaccurate any monitoring device or method required to be maintained under this permit shall, upon conviction, be punished by a fine of not more than $10,000 per violation, or by imprisonment for not more than 2 years, or by both.

c) Any person who knowingly makes any false statement, representation, or certification in any record or other document submitted or required to be maintained under this permit, including monitoring reports or reports of compliance or noncompliance shall, upon conviction, be punished by a fine of not more than $10,000 per violation, or by imprisonment for not more than 2 years, or by both.

d) Nothing in I.14 a), b), and c) shall be construed to limit or prohibit any other authority the Director may have under the State Water Pollution Control Act, Chapter 22, Article 11.

II. OPERATION AND MAINTENANCE:

1. Proper Operation and Maintenance

The permittee shall at all times properly operate and maintain all facilities and systems of treatment and control (and related appurtenances) which are installed or used by the permittee to achieve compliance with the conditions of this permit. Proper operation and maintenance also includes adequate laboratory controls, and appropriate quality assurance procedures. Unless otherwise required by Federal or State law, this provision requires the operation of back-up auxiliary facilities or similar systems which are installed by the permittee only when the operation is necessary to achieve compliance with the conditions of the permit. For domestic waste treatment facilities, waste treatment operators as classified by the WV Bureau of Public Health Laws, W. Va. Code Chapter 16-1, will be required except that in circumstances where the domestic waste treatment facility is receiving any type of industrial waste, the Director may require a more highly skilled operator.

2. Need to Halt or Reduce Activity Not a Defense

It shall not be a defense for a permittee in an enforcement action that it would have been necessary to halt or reduce the permitted activity in order to maintain compliance with the conditions of the permit.

3. Bypass

a) Definitions
   (1) "Bypass" means the intentional diversion of waste streams from any portion of a treatment facility; and
   (2) "Severe property damage" means substantial physical damage to property, damage to the treatment facilities which causes them to become inoperable, or substantial and permanent loss of natural resources which can reasonably be expected to occur in the absence of a bypass. Severe property damage does not mean economic loss caused by delays in production.

b) Bypass not exceeding limitations. The permittee may allow any bypass to occur which does not cause effluent limitations to be exceeded, but only if it also is for essential maintenance to assure efficient operation. These bypasses are not subject to the provision of II.3.c) and II.3.d) of this permit.

c) (1) If the permittee knows in advance of the need for a bypass, it shall submit prior notice, if possible at least ten (10) days before the date of the bypass;
   (2) If the permittee does not know in advance of the need for bypass, notice shall be submitted as required in IV.2.b) of this permit.

d) Prohibition of bypass
   (1) Bypass is permitted only under the following conditions, and the Director may take enforcement action against a permittee for a bypass, unless;
      (A) Bypass was unavoidable to prevent loss of life, personal injury, or severe property damage;
      (B) There were no feasible alternatives to the bypass, such as the use of auxiliary treatment facilities, retention of untreated wastes, or maintenance during normal periods of equipment downtime. This condition is not satisfied if adequate backup equipment should have been installed in the exercise of reasonable engineering judgement to prevent a bypass which occurred during normal periods of equipment downtime or preventative maintenance; and
      (C) The permittee submitted notices as required under II.3.c) of this permit.
   (2) The Director may approve an anticipated bypass, after considering its adverse effects, if the Director determines that it will meet the three conditions listed in II.3.d.(1) of this permit.

4. Upset

a) Definition. "Upset" means an exceptional incident in which there is unintentional and temporary noncompliance with technology-based permit effluent limitations because of factors beyond the reasonable control of the permittee. An upset does not include noncompliance to the extent caused by operational error, improperly designed treatment facilities, inadequate treatment facilities, lack of preventative maintenance, or careless or improper operation.

b) Effect of an upset. An upset constitutes an affirmative defense to an action brought for noncompliance with such technology-based permit effluent limitation if the requirements of II.4.c) are met. No determination made during administrative review of claims that noncompliance was caused by upset, and before an action for noncompliance, is final administrative action subject to judicial review.

c) Conditions necessary for a demonstration of upset. A permittee who wishes to establish the affirmative defense of upset shall demonstrate, through properly signed, contemporaneous operating logs, or other relevant evidence that:
   (1) An upset occurred and that the permittee can identify the cause(s) of the upset;
   (2) The permitted facility was at the time being properly operated;
   (3) The permittee submitted notice of the upset as required in IV.2.b) of this permit.
   (4) The permittee complied with any remedial measures required under I.3. of this permit.

d) Burden of proof. In any enforcement proceeding the permittee seeking to establish the occurrence of an upset has the burden of proof.

5. Removed Substances

Where removed substances are not otherwise covered by the terms and conditions of this permit or other existing permit by the Director, any solids, sludges, filter backwash or other pollutants (removed in the course of treatment or control of wastewaters) and which are intended for disposal within the State, shall be disposed of only in a manner and at a site subject to the approval by the Director. If such substances are intended for disposal outside the State or for reuse, i.e., as a material used for making another product, which in turn has another use, the permittee shall notify the Director in writing of the proposed disposal or use of such substances, the identity of the prospective disposer or users, and the intended place of disposal or use, as appropriate.

III. MONITORING AND REPORTING

1. Representative Sampling

Samples and measurements taken for the purpose of monitoring shall be representative of the monitored activity.

2. Reporting

a) Permittee shall submit, according to the enclosed format, a Discharge Monitoring Report (DMR) indicating in terms of concentration, and/or quantities, the values of the constituents listed in Part A analytically determined to be in the plant effluent(s). DMR submissions shall be made in accordance with the terms contained in Section C of this permit.

b) Enter reported average and maximum values under "Quantity" and "Concentration" in the units specified for each parameter, as appropriate.

c) Specify the number of analyzed samples that exceed the allowable permit conditions in the columns labeled "N.E." (i.e., number exceeding).

d) Specify frequency of analysis for each parameter as number of analyses/specified period (e.g.,3/month is equivalent to 3 analyses performed every calendar month). If continuous, enter "Cont.". The frequency listed on format is the minimum required.

3. Test Procedures

Samples shall be taken, preserved and analyzed in accordance with the latest edition of 40 CFR Part 136, unless other test procedures have been specified elsewhere in this permit.

4. Recording of Results

For each measurement or sample taken pursuant to the permit, the permittee shall record the following information.

a) The date, exact place, and time of sampling or measurement;

b) The date(s) analyses were performed;

c) The individual(s) who performed the sampling or measurement;

d) The individual(s) who performed the analyses; if a commercial laboratory is used, the name and address of the laboratory;

e) The analytical techniques or methods used, and

f) The results of such analyses. Information not required by the DMR form is not to be submitted to this agency, but is to be retained as required in III.6.

5. Additional Monitoring by Permittee

If the permittee monitors any pollutant at any monitoring point specified in this permit more frequently than required by this permit, using approved test procedures or others as specified in this permit, the results of this monitoring shall be included in the calculation and reporting of the data submitted in the Discharge Monitoring Report Form. Such increased frequency shall also be indicated. Calculations for all limitations which require averaging of measurements shall utilize an arithmetic mean unless otherwise specified in the permit.

6. Records Retention

The permittee shall retain records of all monitoring information, including all calibration and maintenance records and all original chart recordings for continuous monitoring instrumentation, copies of all reports required by this permit, and records of all data used to complete the application for the permit, for a period of at least three (3) years from the date of the sample, measurement, report or application. This period may be extended by request of the Director at any time.

7. Definitions

a) "Daily discharge" means the discharge of a pollutant measured during a calendar day or within any specified period that reasonably represents the calendar day for purposes of sampling. For pollutants with limitations expressed in units of mass, the daily discharge is calculated as the total mass of the pollutant discharged over the day. For pollutants with limitations expressed in other units of measurement, the daily discharge is calculated as the average measurement of the pollutant over the day.

b) "Average monthly discharge limitation" means the highest allowable average of daily discharges over a calendar month, calculated as the sum of all daily discharges measured during a calendar month divided by the number of daily discharges measured during that month.

c) "Maximum daily discharge limitation" means the highest allowable daily discharge.

d) "Composite Sample" is a combination of individual samples obtained at regular intervals over a time period. Either the volume of each individual sample is proportional to discharge flow rates or the sampling interval (for constant volume samples) is proportional to the flow rates over the time period used to produce the composite. The maximum time period between individual samples shall be two hours.

e) "Grab Sample" is an individual sample collected in less than 15 minutes.

f) "is" = immersion stabilization - a calibrated device is immersed in the effluent stream until the reading is stabilized.

g) The "daily average temperature" means the arithmetic average of temperature measurements made on an hourly basis, or the mean value plot of the record of a continuous automated temperature recording instrument, either during a calendar month, or during the operating month if flows are of shorter duration.

h) The "daily maximum temperature" means the highest arithmetic average of the temperatures observed for any two (2) consecutive hours during a 24 hour day, or during the operating day if flows are of shorter duration.

i) The "monthly average fecal coliform" bacteria is the geometric average of all samples collected during the month.

j) "Measured Flow" means any method of liquid volume measurement, the accuracy of which has been previously demonstrated in engineering practice, or which a relationship to absolute volume has been obtained.

k) "Estimate" means to be based on a technical evaluation of the sources contributing to the discharge including, but not limited to pump capabilities, water meters and batch discharge volumes.

l) "Non-contact cooling water" means the water that is contained in a leak-free system, i.e., no contact with any gas, liquid, or solid other than the container for transport; the water shall have no net poundage addition of any pollutant over intake water levels, exclusive of approved anti-fouling agents.

IV. OTHER REPORTING

1. Reporting Spills and Accidental Discharges

Nothing in this permit shall be construed to preclude the institution of any legal action or relieve the permittee from any responsibilities, liabilities or penalties established pursuant to Title 47, Series 11, Section 2 of the West Virginia Legislative Rules promulgated pursuant to Chapter 22, Article 11. Attached is a copy of the West Virginia Spill Alert System for use in complying with Title 47, Series 11, Section 2 of the Legislative rules as they pertain to the reporting of spills and accidental discharges.

2. Immediate Reporting

a) The permittee shall report any noncompliance which may endanger health or the environment immediately after becoming aware of the circumstances by using the Agency's designated spill alert telephone number. A written submission shall be provided within five (5) days of the time the permittee becomes aware of the circumstances. The written submission shall contain a description of the noncompliance and its cause; the period of noncompliance, including exact dates and times, and if the noncompliance has not been corrected, the anticipated time it is expected to continue; and steps taken or planned to reduce, eliminate, and prevent recurrence of the noncompliance.

b) The following shall also be reported immediately:
   (1) Any unanticipated bypass which exceeds any effluent limitation in the permit;
   (2) Any upset which exceeds any effluent limitation in the permit; and
   (3) Violation of a maximum daily discharge limitation for any of the pollutants listed by the Director in the permit shall be reported immediately. This list shall include any toxic pollutant or hazardous substance, or any pollutant specifically identified as the method to control a toxic pollutant or hazardous substance.

c) The Director may waive the written report on a case-by-case basis if the oral report has been received in accordance with the above.

d) Compliance with the requirements of IV.2 of this section, shall not relieve a person of compliance with Title 47, Series 11, Section 2.

3. Reporting Requirements

a) Planned changes. The permittee shall give notice to the Director of any planned physical alterations or additions to the permitted facility which may affect the nature or quantity of the discharge. Notice is required when:
   (1) The alteration or addition to a permitted facility may meet one of the criteria for determining whether a facility is a new source in Section 13.7.b of Series 10, Title 47; or
   (2) The alteration or addition could significantly change the nature or increase the quantity of pollutants discharged. This notification applies to pollutants which are subject neither to effluent limitations in the permit, nor to notification requirements under IV.2 of this section.

b) Anticipated noncompliance. The permittee shall give advance notice to the Director of any planned changes in the permitted facility or activity which may result in noncompliance with permit requirements.

c) In addition to the above reporting requirements, all existing manufacturing, commercial, and silvicultural discharges must notify the Director in writing as soon as they know or have reason to believe:
   (1) That any activity has occurred or will occur which would result in the discharge, on a routine or frequent basis, or any toxic pollutant which is not limited in the permit, if that discharge will exceed the highest of the following "notification levels":
      (A) One hundred micrograms per liter (100 ug/l);
      (B) Two hundred micrograms per liter (200 ug/l) for acrolein and acrylonitrile; five hundred micrograms per liter (500 ug/l) for 2,4-dinitro phenol; and for 2-methyl 4,6-dinitrophenol; and one milligram per liter (1 mg/l) for antimony;
      (C) Five (5) times the maximum concentration value reported for that pollutant in the permit application in accordance with Section 4.4.b.9 of Series10, Title 47.
      (D) The level established by the Director in accordance with Section 6.3.g of Series 10, Title 47;
   (2) That any activity has occurred or will occur which would result in any discharge (on a non-routine or infrequent basis) of a toxic which is not limited in the permit, if that discharge will exceed the highest of the following "notification levels":
      (A) Five hundred micrograms per liter (500 ug/l);
      (B) One milligram per liter (1 mg/l) for antimony;
      (C) Ten (10) times the maximum concentration value reported for that pollutant in the permit application in accordance with Section 4.4.b.7 of Series 10, Title 47;
      (D) The level established by the Director in accordance with Section 6.3.g of Series 10, Title 47.
   (3) That they have begun or expect to begin to use or manufacture as an intermediate or final product or by-product of any toxic pollutant which was not reported in the permit application under Section 4.4.b.9 of Series 10, Title 47 and which will result in the discharge on a routine or frequent basis of that toxic pollutant at levels which exceed five times the detection limit for that pollutant under approved analytical procedure.
   (4) That they have begun or expect to begin to use or manufacture as an intermediate or final product or by-product of any toxic pollutant which was not reported in the permit application under Section 4.4.b.9 of Series 10, Title 47 and which will result in the discharge on a non-routine or infrequent basis of that toxic pollutant at levels which exceed ten times the detection limit for that pollutant under approved analytical procedure.

4. Other Noncompliance

The permittee shall report all instances of noncompliance not reported under the above paragraphs at the time monitoring reports are submitted. The reports shall contain the information listed in IV.2.a). Should other applicable noncompliance reporting be required, these terms and conditions will be found in Section C of this permit.

WRD 2A-82

STATE OF WEST VIRGINIA
NATIONAL POLLUTANT DISCHARGE ELIMINATION SYSTEM
DISCHARGE MONITORING REPORT

Permit Limits

FACILITY NAME: (Existing Wastewater Treatment Plant) PNGI CHARLES TOWN GAM
LOCATION OF FACILITY: CHARLES TOWN; Jefferson County
PERMIT NO.: WV0105856 001
WASTELOAD FOR THE MONTH OF:

CERTIFIED LABORATORY NAME:
CERTIFIED LABORATORY ADDRESS:
INDIVIDUAL PERFORMING ANALYSIS:

Parameter		Quantity				Other Units						Measurement Frequency	Sample Type
				Units	N.E.				CEL*	Units	N.E.		
50050 (ML-1) RF-A Flow,in Conduit or thru plant Year Round	Reported			Mill. Galls/Mon					N/A	mgd		Continuous	measured
	Permit Limits	Rpt Only Monthly Total	N/A			Rpt Only Minimum	0.25 Avg. Monthly	Rpt Only Max. Daily					
00310 (ML-B) RF-A BOD, 5-Day 20 Deg.C Year Round	Reported			Lbs/Day					N/A	mg/l		1/month	Batch
	Permit Limits	10.4 Avg. Monthly	20.8 Max. Daily			N/A	5 Avg. Monthly	10 Max. Daily					
00530 (ML-A) RF-A Total Suspended Solids Year Round	Reported			Lbs/Day					N/A	mg/l		1/month	Batch
	Permit Limits	63 Avg. Monthly	126 Max. Daily			N/A	30 Avg. Monthly	60 Max. Daily					
81010 (ML-K) RF-A BOD, % Removal Year Round	Reported								N/A	Percent		1/month	Calculated
	Permit Limits	N/A	N/A			85 Month. Avg. Min.	N/A	N/A					
81011 (ML-K) RF-A Suspended Solids, % Removal Year Round	Reported								N/A	Percent		1/month	Calculated
	Permit Limits	N/A	N/A			85 Month. Avg. Min.	N/A	N/A					
74055 (ML-A) RF-A Coliform, Fecal Year Round	Reported								N/A	Cnts/100m		1/month	Grab
	Permit Limits	N/A	N/A			N/A	200 Mon. Geo. Mean	400 Max. Daily					

* CEL = Compliance Evaluation Level

Name of Principal Executive Officer	I certify under penalty of law that this document and all attachments were prepared under my direction or supervision in accordance with a system designed to assure that qualified personnel properly gather and evaluate the information submitted. Based on my inquiry of the person or persons who manage the system, or those persons directly responsible for gathering the information, the information submitted is, to the best of my knowledge and belief, true, accurate, and complete. I am aware that there are significant penalties for submitting false information including the possibility of a fine and imprisonment for knowing violations.	Date Completed
Title of Officer		Signature of Principal Executive Officer or Authorized Agent

WRD 2A-82

STATE OF WEST VIRGINIA
NATIONAL POLLUTANT DISCHARGE ELIMINATION SYSTEM
DISCHARGE MONITORING REPORT

Permit Limits

FACILITY NAME: (Existing Wastewater Treatment Plant) PNGI CHARLES TOWN GAM
LOCATION OF FACILITY: CHARLES TOWN; Jefferson County
PERMIT NO.: WV0105856 001
WASTELOAD FOR THE MONTH OF:

CERTIFIED LABORATORY NAME:
CERTIFIED LABORATORY ADDRESS:
INDIVIDUAL PERFORMING ANALYSIS:

Parameter		Quantity				Other Units						Measurement Frequency	Sample Type
				Units	N.E.				CEL*	Units	N.E.		
00400 (ML-A) RF-A pH Year Round	Reported												
	Permit Limits	N/A	N/A			6 Inst. Min.	N/A	9 Inst. Max.	N/A	S.U.		1/month	Grab
00300 (ML-A) RF-A Dissolved Oxygen Year Round	Reported												
	Permit Limits	N/A	N/A			7.25 Minimum	N/A	N/A	N/A	mg/l		1/month	Grab
00610 (ML-A) RF-A Ammonia Nitrogen Year Round	Reported												
	Permit Limits	3.1 Avg. Monthly	6.2 Max. Daily	Lbs/Day		N/A	1.5 Avg. Monthly	3 Max. Daily	N/A	mg/l		1/month	Batch
00600 (ML-A) RF-D Nitrogen, Total (as N) Year Round	Reported												
	Permit Limits	N/A	3805 Annual Total	Lbs/Year		N/A	N/A	N/A	N/A			1/year	Calculated
00600 (ML-A) RF-A Nitrogen, Total (as N) Year Round	Reported												
	Permit Limits	Rpt Only Monthly Total	N/A	Lbs/Month		N/A	Rpt Only Avg. Monthly	Rpt Only Max. Daily	N/A	mg/l		1/month	Batch
00665 (ML-A) RF-D Phosphorus, Total Year Round	Reported												
	Permit Limits	N/A	380 Annual Total	Lbs/Year		N/A	N/A	N/A	N/A			1/year	Calculated

* CEL = Compliance Evaluation Level

Name of Principal Executive Officer	I certify under penalty of law that this document and all attachments were prepared under my direction or supervision in accordance with a system designed to assure that qualified personnel properly gather and evaluate the information submitted. Based on my inquiry of the person or persons who manage the system, or those persons directly responsible for gathering the information, the information submitted is, to the best of my knowledge and belief, true, accurate, and complete. I am aware that there are significant penalties for submitting false information including the possibility of a fine and imprisonment for knowing violations.	Date Completed
Title of Officer		Signature of Principal Executive Officer or Authorized Agent

WRD 2A-82

STATE OF WEST VIRGINIA
NATIONAL POLLUTANT DISCHARGE ELIMINATION SYSTEM
DISCHARGE MONITORING REPORT

Permit Limits

FACILITY NAME: (Existing Wastewater Treatment Plant) PNGI CHARLES TOWN GAM
LOCATION OF FACILITY: CHARLES TOWN; Jefferson County
PERMIT NO.: WV0105856 001
WASTELOAD FOR THE MONTH OF:

CERTIFIED LABORATORY NAME:
CERTIFIED LABORATORY ADDRESS:
INDIVIDUAL PERFORMING ANALYSIS:

Parameter		Quantity				Other Units						Measurement Frequency	Sample Type
				Units	N.E.				CEL*	Units	N.E.		
00665 (ML-A) RF-A Phosphorus, Total Year Round	Reported			Lbs/Month					N/A	mg/l		1/month	Batch
	Permit Limits	Rpt Only Monthly Total	N/A			N/A	Rpt Only Avg. Monthly	Rpt Only Max. Daily					
01119 (ML-A) RF-A Copper, Total Recoverable Year Round	Reported								N/A	mg/l		1/month	Batch
	Permit Limits	N/A	N/A			N/A	0.017 Avg. Monthly	0.039 Max. Daily					
01114 (ML-A) RF-D Lead, Total Recoverable Year Round	Reported								N/A	mg/l		1/year	Batch
	Permit Limits	N/A	N/A			N/A	Rpt Only Avg. Monthly	Rpt Only Max. Daily					
01094 (ML-A) RF-D Zinc, Total Recoverable Year Round	Reported								N/A	mg/l		1/year	Batch
	Permit Limits	N/A	N/A			N/A	Rpt Only Avg. Monthly	Rpt Only Max. Daily					
00900 (ML-5) RF-C Hardness, Total (as CaCO3) Year Round	Reported								N/A	mg/l		1/6 months	Grab
	Permit Limits	N/A	N/A			N/A	Rpt Only Avg. Monthly	Rpt Only Max. Daily					
00980 (ML-A) RF-A Iron, Total Recoverable Year Round	Reported								N/A	mg/l		1/month	Batch
	Permit Limits	N/A	N/A			N/A	0.62 Avg. Monthly	1.82 Max. Daily					

* CEL = Compliance Evaluation Level

Name of Principal Executive Officer	I certify under penalty of law that this document and all attachments were prepared under my direction or supervision in accordance with a system designed to assure that qualified personnel properly gather and evaluate the information submitted. Based on my inquiry of the person or persons who manage the system, or those persons directly responsible for gathering the information, the information submitted is, to the best of my knowledge and belief, true, accurate, and complete. I am aware that there are significant penalties for submitting false information including the possibility of a fine and imprisonment for knowing violations.	Date Completed
Title of Officer		Signature of Principal Executive Officer or Authorized Agent

WRD 2A-82

STATE OF WEST VIRGINIA
NATIONAL POLLUTANT DISCHARGE ELIMINATION SYSTEM
DISCHARGE MONITORING REPORT

Permit Limits

FACILITY NAME: (Existing Wastewater Treatment Plant) PNGI CHARLES TOWN GAM
LOCATION OF FACILITY: CHARLES TOWN; Jefferson County
PERMIT NO.: WV0105856 001
WASTELOAD FOR THE MONTH OF:

CERTIFIED LABORATORY NAME:
CERTIFIED LABORATORY ADDRESS:
INDIVIDUAL PERFORMING ANALYSIS:

Parameter		Quantity				Other Units						Measurement Frequency	Sample Type
				Units	N.E.				CEL*	Units	N.E.		
00940 (ML-A) RF-A	Reported												
Chloride (as Cl)	Permit Limits	N/A	N/A			N/A	250 Avg. Monthly	383 Max. Daily	N/A	mg/l		1/month	Batch
Year Round													

* CEL = Compliance Evaluation Level

Name of Principal Executive Officer	I certify under penalty of law that this document and all attachments were prepared under my direction or supervision in accordance with a system designed to assure that qualified personnel properly gather and evaluate the information submitted. Based on my inquiry of the person or persons who manage the system, or those persons directly responsible for gathering the information, the information submitted is, to the best of my knowledge and belief, true, accurate, and complete. I am aware that there are significant penalties for submitting false information including the possibility of a fine and imprisonment for knowing violations.	Date Completed
Title of Officer		Signature of Principal Executive Officer or Authorized Agent

STATE OF WEST VIRGINIA
NATIONAL POLLUTANT DISCHARGE ELIMINATION SYSTEM
SEWAGE SLUDGE MANAGEMENT REPORT

FACILITY NAME: (PNGI Charles Town Gaming LLC)PNGI CHARLES TOWN GAMING,

ADDRESS: C/o Hollywood Casino At Charles Town Races, P.O. Box 551, Charles Town, WV

PERMIT NUMBER: WV0105856

DESIGN FLOW: 250,000 gpd

YEAR: _____

Liquid Sludge

Amount Removed this Year (Gallons): _____ Frequency of Removal(Occurrences per Year): _____

Liquid Sludge Removed By: _____

I certify under penalty of law that all sewage sludge disposed from this facility during this period is reckoned and accounted for in this sewage sludge management report. This determination has been made under my supervision in accordance with a system designed to ensure that qualified personnel properly gather and evaluate information used to compile this report. I also certify that this document and all the attachments were prepared under my direction or supervision, and that the information is, to the best of my knowledge and belief, true, accurate, and complete. I am aware that there are penalties for false certification including the possibility of fine and imprisonment.

OFFICIAL _____ TITLE _____

SIGNATURE _____ DATE _____

Additional Comments or Explanation:

EMERGENCY RESPONSE SPILL ALERT SYSTEM
WEST VIRGINIA DEPARTMENT OF ENVIRONMENTAL PROTECTION

REQUIREMENTS:

Title 47, Series 11, Section 2 of the West Virginia Legislative Rules, Environmental Protection, Water Resources - Waste Management, Effective July 1, 1994.

RESPONSIBILITY FOR REPORTING:

Each and every person who may cause or be responsible for any spill or accidental discharge of pollutants into the waters of the State shall give immediate notification to the Division of Water and Waste Management's Emergency Notification Number, 1-800-642-3074. Such notification shall set forth insofar as possible and as soon thereafter as practical the time and place of such spill or discharge, type or types and quantity or quantities of the material or materials therein, action or actions taken to stop such spill or discharge and to minimize the polluting effect thereof, the measure or measures taken or to be taken in order to prevent a recurrence of any such spill or discharge and such additional information as may be requested by the Division of Water and Waste Management. This also applies to spills to the waters of the State resulting from accidents to common carriers by highway, rail and water.

It shall be the responsibility of each industrial establishment or other entity discharging directly to a stream to have available the following information pertaining to those substances that are employed or handled in its operation in sufficiently large amounts as to constitute a hazard in case of an accidental spill or discharge into a public stream:

(1) Potential toxicity in water to man, animals and aquatic life;
(2) Details on analytical procedures for the quantitative estimation of such substances in water and
(3) Suggestions on safeguards or other precautionary measures to nullify the toxic effects of a substance once it has gotten into a stream.

Failure to furnish such information as required by Section 14, Article 11, Chapter 22, Code of West Virginia may be punishable under Section 24, Article 11, Chapter 22, and/or Section 22, Article 11, Chapter 22, Code of West Virginia.

It shall be the responsibility of any person who causes or contributes in any way to the spill or accidental discharge of any pollutant or pollutants into State waters to immediately take any and all measures necessary to contain such spill or discharge. It shall further be the responsibility of such person to take any and all measures necessary to clean-up, remove and otherwise render such spill or discharge harmless to the waters of the State.

When the Director determines it necessary for the effective containment and abatement of spills and accidental discharges, the Director may require the person or persons responsible for such spill or discharge to monitor affected waters in a manner prescribed by the Director until the possibility of any adverse effect on the waters of the State no longer exists.

VOLUNTARY REPORTING BY LAW OFFICERS, U. S. COAST GUARD, LOCK MASTERS AND OTHERS:

In cases involving river and highway accidents where the responsible party may or may not be available to report the incident, law officers, U. S. Coast Guard, Lock Masters and other interested person(s) should make the report.

WHO TO CONTACT:
Notify the following number: **1-800-642-3074**

INFORMATION NEEDED:
- Source of spill or discharge
- Location of incident
- Time of incident
- Material spilled or discharged
- Amount spilled or discharged
- Toxicity of material spilled or discharged
- Personnel at the scene
- Actions initiated
- Shipper/Manufacturer identification
- Railcar/Truck identification number
- Container type

NOTICE TO PERMITTEES

The 1999 regular session of the West Virginia legislature revised the Water Pollution Control Act, Chapter 22, Article 11, Section 10 of the Code of West Virginia relating to fees associated with permits. This section of the Code requires all holders of a State water pollution control permit or a national pollutant discharge elimination system permit to be assessed an annual permit fee, based upon rules promulgated by the Secretary of the Department of Environmental Protection. The Secretary has promulgated a final rule in accordance with the code revision to this effect and these rules were effective May 4, 2000. The rules establish an annual permit fee based upon the relative potential to degrade the waters of the State which, in most instances, relate to volume of discharge. However, for sewage facilities, the annual permit fee is based upon the number of customers served by the facility. You may contact the Secretary of State's Office, State Capitol Building, Charleston, WV 25305, to obtain a copy of the rules. The reference is Title 47, Legislative Rules, Department of Environmental Protection, Division of Water Resources, Series 26 Water Pollution Control Permit Fee Schedules.

Based upon the volume of discharge for which your facility is currently permitted, the number of customers served by your facility or for the category you fall within, pursuant to Section 7 of Title 47, Series 26, your annual permit fee is **$250.00**. This fee is due no later than the anniversary date of permit issuance in each year of the term of the permit or in the case of coverage under a general permit, the fee is due no later than the anniversary date of your coverage under the general permit. **You will be invoiced by this agency at the appropriate time for the fee**. Failure to submit the annual fee within ninety(90) days of the due date will render your permit void upon the date you are mailed a certified written notice to that effect.

CHARLES TOWN UTILITY BOARD
WATER/SEWER SYSTEMS UPGRADE PROJECTS

RUMMEL, KLEPPER & KAHL, LLP

TASK NO. 21

PROFESSIONAL ENGINEERING & SURVEYING SERVICES

FORREST PUMP STATION LITIGATION

May 02, 2022

Being a part of Agreement Between
Charles Town Utility Board and Rummel, Klepper & Kahl, LLP
dated November 13, 2019

This Task No. 21 dated May 02, 2022 to the Agreement between Charles Town Utility Board (CTUB) and Rummel, Klepper & Kahl, LLP (RK&K) dated November 13, 2019 is for providing professional engineering services for assisting CTUB with litigation issues between CTUB and Eric Addison as it relates to a sewer back-up complaint within the plaintiffs residence (Claim No. 0AB262300).

Scope of Services

The following summarizes RK&K's anticipated scope of services as part of this effort:

1. RK&K will assist with providing information to CTUB and CTUB's litigation engineer expert for the Addison Sewer Back-Up Case.

2. RK&K will analyze the design capacity and performance of the Forrest Avenue Pump Station.

3. RK&K will meet with CTUB staff, attorney, engineer as needed to review data and address questions.

Schedule

Duration of the court case.

Estimated Person-Hours per Phase by Category, Engineer's Consultant Costs and Other Direct Costs

A fee derivation is attached as Page 3 which includes RK&K's estimated person-hours per phase by category and other direct costs anticipated for this effort.

Should mediation not be successful, effort involved will be reevaluated at that time.

Materials and Resources Required of CTUB

- CTUB will be responsible for providing pump runtime/flow monitoring, O&M manuals, pump curves, and engineering drawings for the Forrest Avenue force main and pump station.

Estimated Fee

RK&K will invoice for services provided at an amount equal to Engineer's Direct Labor Costs times a factor of 2.7 for the services of Engineer's personnel engaged on the Project, plus Reimbursable Expenses.

The total estimated fee to perform the work is $8,900.00 as shown on RK&K's enclosed fee derivation.

Authorization

This Task No. 21 Forrest Pump Station Litigation dated May 02, 2022 and being a part of the Agreement between Charles Town Utility Board and Rummel, Klepper & Kahl, LLP for Engineering Services for Water/Sewer Systems Upgrade Projects dated November 13, 2019, is approved by the following duly authorized officials:

Engineer: RUMMEL, KLEPPER & KAHL, LLP

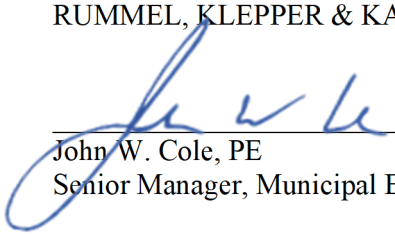

_____ 05/20/2022_____
John W. Cole, PE Date
Senior Manager, Municipal Engineering

Owner: Charles Town Utility Board

_____ _____
Kristen Stolipher Date
Utility General Manager

RUMMEL, KLEPPER KAHL, LLP
FEE DERIVATION
CHARLES TOWN UTILITY BOARD
TASK 21
FORREST PUMP STATION LITIGATION
May 2, 2022

Scope of Services	Manager	Associate Engineer	Senior Engineer	Misc. Exp.	Task Total Hours
Technical Assistance					
Review Assistance	4	8	26		**38**
Meetings	8	8	8	$ 120.00	**144**
Total Hours	**12**	**16**	**34**	**$ 120.00**	**182**

Est. Fee	**$ 8,900.00**

Proposed CTUB Water Service Area Delineation

N
W E
S

OPTION 2

OPTION 1

CHARLES TOWN RD
ROUTE 9
FLOWING SPRINGS RD
SHEPHERDSTOWN PIKE
MONTGOMERY CO.
N MILDRED ST
WILLIAM L WILSON FWY
KOONCE RD
LEETOWN RD
QUEEN ST
MIDDLEWAY PIKE
S FAIRFAX BLVD
E WASHINGTON ST
W WASHINGTON ST
S GEORGE ST
ROUTE 9
BERRYVILLE PIKE
SUMMIT POINT RD
KABLETOWN RD

- CTUB Waterline
- Tank
- Pump
- Parcels
- Roads

Urban Growth Boundaries

- Bolivar
- Bolivar - Proposed
- Charles Town
- Harpers Ferry
- Harpers Ferry - Proposed
- Ranson

Charles Town
Utility Board
661 S. George Street, Suite 101 Charles Town, WV 25414
Phone: (304) 725-2316 ♦ Fax: (304) 725-7150 ♦ Web: www.ctubwv.com

MEMORANDUM TO THE BOARD OF DIRECTORS

FROM: Kristen Stolipher, Utility General Manager
SUBJECT: Utility General Manager's Report
DATE: May 25, 2022

ADMINISTRATIVE

- Customer Counts
  - Sewer 8,287 (2,064 billed by JUI)
  - Water 6,403
- JUI Billing Agreement – ON HOLD
- Request for Qualifications to provide underwriting services to the City of Charles Town, WV

WATER

- Water Facility Plan update
  - GDF presentation of DRAFT Report – May 25, 2022
  - Dewberry DRAFT report and Water CIF presentation - June 8, 2022
- Hydrant Flushing
  - Notice to customers in the Spirit and on CTUB website beginning May 20, 2022. Flushing to begin in June and will continue to through the end of July.
- Grant update – Neal Nilsen is working on schedule and equipment selection

SEWER

- 2022 Renewal and Replacement Project updates
  - 3RD Reading and Public Hearing – Approved May 16, 2022
  - Pre-bid meeting, May 20, 2022
- Novaform Expand-in-place demonstration – June 2, 2022

INFORMATION

- **Capacity Improvement Fee collection: See attached.**
- **Water and Wastewater Plant flows: See attached.**

May 19, 2022

VIA ELECTRONIC MAIL

RE: Request for Qualifications to Provide Underwriting Services

On behalf of the **City of Charles Town, West Virginia** (the "Issuer"), Compass Municipal Advisors, LLC ("CMA"), financial advisor to the Issuer, is assisting the Issuer with its solicitation of Statements of Qualifications solely from investment banking firms in order to select an underwriter(s) for the issuance of approximately $8,540,000 in Combined Waterworks and Sewerage System Revenue Bonds, Series 2022B (the "Bonds").

The Bonds are being issued to fund various capital improvement projects with pricing anticipated to occur in July 2022. The Issuer maintains an underlying Moody's rating of "Aa3" and a Waterworks and Sewerage System Moody's rating of "A1". It is anticipated the Bonds will be designated as Bank Qualified and insured by Build America Mutual, with an additional insurance surety policy in place to satisfy the debt service reserve requirement. CMA invites you to submit your qualifications in accordance with the terms set forth herein.

The retained firm(s) will be subject to supervision and direction by the Issuer, CMA and other persons or entities designated by the Issuer. The successful firm(s) will agree to perform all services requested and required for the successful issuance and delivery of the Bonds with the standard of care normally given to matters of this nature.

The Issuer has retained Steptoe & Johnson PLLC as bond counsel.

If you desire to have your firm considered for the provision of underwriting services related to the issuance of the Bonds, please provide your response to the attached Request for Qualifications ("RFQ"). Responses are due on or before June 2, 2022 at 4:00 p.m. E.T. Electronic responses will only be accepted and should be sent to kstolipher@ctubwv.com, michael.george@compassmuni.com and john.stump@steptoe-johnson.com.

Please direct all questions regarding the RFQ in writing to Michael George, financial advisor at michael.george@compassmuni.com and John Stump, bond counsel at john.stump@steptoe-johnson.com.

Sincerely,

Michael George, Managing Director
Compass Municipal Advisors, LLC

Enclosure

A. RFQ TIMELINE

1. Issuance of RFQ: May 19, 2022
2. RFQ Submission Date: June 2, 2022
3. Selection of Underwriter(s): June 16, 2022 (estimated, subject to change)

B. SELECTION CRITERIA

Selection of an Underwriter will be based on the following criteria:

1. Experience in underwriting tax-exempt bonds.
2. Experience in underwriting West Virginia utility revenue bonds, specifically with issuers similar in size and credit to the Issuer.
3. Professional qualifications of the Underwriting firm and the specific individuals assigned to the financing.
4. Demonstration of firm capabilities to serve as a book-running senior manager or co-manager.
5. Demonstration of value in setting underwriting takedown levels for the transaction to achieve the lowest cost of capital.

C. TERMS AND CONDITIONS

Each Underwriting firm responding to this RFQ agrees to the following:

1. The Issuer reserves the absolute right to reject any and all qualifications, to determine who is the successful applicant for the work described in this RFQ, to waive any irregularities or informalities, if applicable, and to select the Underwriting firm(s) considered the most advantageous to the Issuer.
2. The Underwriting firm shall not assign any interest in any executed agreement with the Issuer and shall likewise not transfer any portion of the work to be performed under same without the prior written consent of the Issuer.
3. Proposers, their agents and/or associates are prohibited from contacting any official or employee of the Issuer during the time this RFQ is outstanding. Violation of this prohibition will result in disqualification.

D. SCOPE OF SERVICES

The Underwriting firm will be responsible for providing the following services:

1. Assist the Issuer and/or its designated advisors in the preparation and/or review of relevant documents necessary in connection with the issuance of the Bonds.

2. Assist in the preparation of a preliminary and final Official Statement for the Bonds in accordance with current disclosure guidelines of the Municipal Securities Rulemaking Board and the Government Finance Officers Association.

3. Provide recommendations to specific language and provisions to a Master Bond Resolution that could enhance current and future bond transactions.

4. Consult with the Issuer and/or its designated advisors on proposed and actual changes in all applicable tax laws and finance market changes that could affect the bond issue, including, but not limited to, arbitrage regulations.

5. Consult with the Issuer's officials, staff, and designated advisors; attend meetings to discuss the issuance of the Bonds, issue as reasonably requested.

6. Market the Bonds and provide a firm commitment bond purchase contract to purchase the Bonds at prevailing market interest rates.

7. Coordinate with and assist bond counsel and local counsel as to the printing, signing, and delivery of the Bonds, as well as all other aspects of the closing.

8. Provide such additional services as may reasonably be deemed necessary or appropriate in order to properly complete the financing.

E. PROPOSAL REQUIREMENTS

1. Provide a brief description of your firm and its capabilities. In particular, describe your firm's public finance department, its position and level of importance in the firm, and your firm's commitment to this area.

2. Provide relevant background information for the actual individuals in your firm who will be assigned to provide underwriting services and their specific duties.

3. Summarize your firm and/or staff experience underwriting similar utility revenue-backed transactions.

4. Describe three (3) similar transactions in which your firm has served as an underwriter. For each transaction listed, please provide the issuer name, issue date, par amount and a brief description of how the transaction highlights your firm's abilities to serve in the requested role(s) identified above.

5. Provide estimated coupons, yields and spreads to the MMD based on the amortization schedule provided. Assume the MMD scale as of May 26, 2022.

6. Please describe any structuring recommendations which would enhance the transaction.

7. Provide recommended underwriter takedown levels and how such levels could be utilized to appropriately position the transaction to achieve the lowest cost of capital.

8. Provide proposed transaction cost of issuance and fees for underwriter's counsel (include firm name and assigned attorney) to prepare the bond purchase agreement, offering document, etc.

9. Provide a statement of uncommitted capital available to underwrite bonds and willingness of the firm to purchase the entire offering, if necessary.

10. Disclose any current or potential conflicts of interest, as stated in MSRB Rule G-17.

F. DRAFT AMORTIZATION SCHEDULE

Maturity	Amount
06/01/23	$50,000
06/01/24	$45,000
06/01/25	$50,000
06/01/26	$45,000
06/01/27	$90,000
06/01/28	$50,000
06/01/29	$65,000
06/01/30	$135,000
06/01/31	$130,000
06/01/32	$155,000
06/01/33	$155,000
06/01/34	$200,000
06/01/35	$210,000
06/01/36	$220,000
06/01/37	$225,000
06/01/38	$230,000
06/01/39	$135,000
06/01/40	$175,000
06/01/41	$145,000
06/01/42	$330,000
06/01/43	$365,000
06/01/44	$465,000
06/01/45	$495,000
06/01/46	$555,000
06/01/47	$580,000
06/01/48	$600,000
06/01/49	$625,000
06/01/50	$650,000
06/01/51	$670,000
06/01/52	$695,000

Customer Name	Location	Lot Number	CIF Date Paid	Number of Sewer EDUs	Sewer CIF Amount Paid	Number of Water EDU's	Water CIF Amount Paid
Wormald	Beallair	134	1/11/2022	1	$ 3,207.00		
Gordon	Burr West - TeMa	20-21	1/11/2022	1.5	$ 4,810.50		
Leonard, Dave	10th Avenue	A-C	1/13/2022	2	$ 2,254.00	2	$ 5,152.00
Lennar	Norborne Glebe	304-317	1/20/2022	14	$ 44,898.00	14	$ 36,064.00
Dan Ryan	Tate Manor	30-40	1/24/2022	11	$ 12,397.00	11	$ 28,336.00
Wormald	Beallair	136	1/25/2022	1	$ 3,207.00		
Sheetz	Burr Park	13-14	1/25/2022	0.03	$ 962.10		
Wormald	Beallair	153-154	2/8/2022	2	$ 6,414.00		
Roper	418 S Charles St		2/16/2022	1	$ 1,127.00	1	$ 2,576.00
Dan Ryan	Huntfield	858-871	2/25/2022	14	$ 15,778.00	14	$ 36,064.00
Wormald	Beallair	143, 145	3/8/2022	2	$ 6,414.00		
Integrity Engineering	Sheetz-Augustine Avenue		3/14/2022	16.66	$ 66,673.32	16.66	$ 42,916.16
Dan Ryan	Tate Manor	41-46	3/11/2022	6	$ 6,762.00	6	$ 15,456.00
Lutman	Maple Ave	2-3	3/15/2022	1	$ 1,127.00	1	$ 2,576.00
Lutman	Higgs Blvd	23-28	3/15/2022	6	$ 6,762.00	6	$ 15,456.00
Lutman	Maple Ave (Apt)	2-3	3/16/2022	1	$ 1,127.00	1	$ 2,576.00
Lutman	Pacel 2 MLK Blvd		3/16/2022	2	$ 2,254.00	2	$ 5,152.00
Lennar	Norborne Glebe	1-14	3/17/2022	14	$ 44,898.00	14	$ 36,064.00
Washington Landing L	Washington Landing (270 Apt Units, Clubhouse, Pool		3/24/2022	129.93	$ 519,720.00		
Washington Landing L	Washington Landing (Building 100, Clubhouse)		3/24/2022			22.69	$ 28,042.00
Wormald	Beallair	148, 151	3/25/2022	2	$ 6,414.00		
3.4 Homes WV	115 Park Avenue		4/1/2022	3	$ 3,381.00		
Dan Ryan Builders	Huntfield	614	4/4/2022	1	$ 1,127.00	1	$ 2,576.00
DRH	Magnolia Springs	16-17, 29-31, 50-51	4/6/2022	7	$ 7,889.00	7	$ 18,032.00
Lennar	Norborne Glebe	15-31, 273-277, 280-281	4/7/2022	24	$ 76,968.00	24	$ 61,824.00
Dan Ryan Builders	Huntfield	615	4/8/2022	1	$ 2,930.00	1	$ 2,576.00
Wormald	Beallair	59, 137, 146, 147, 155	4/8/2022	5	$ 14,650.00		
DRH	Magnolia Springs	1, 11-12, 15, 49, 52, 54-57, 60-64, 79-83, 90	4/13/2022			21	$ 54,096.00
Dan Ryan Builders	Huntfield	884-887	4/14/2022	4	$ 11,720.00	4	$ 10,304.00
Stanley Martin	Presidents Pointe	77-96	4/18/2022	20	$ 91,100.00		
Washington Landing L	Washington Landing (Building 200, 300)		4/21/2022			23.03	$ 59,328.00
DRH	Magnolia Springs	53	4/25/2022	1	$ 2,930.00	1	$ 2,576.00
DRH	Magnolia Springs	1, 11-12, 15, 49, 52, 54-57, 60-64, 79-83, 90	4/25/2022	21	$ 61,530.00		
DRH	Magnolia Springs	16-17, 29-31, 50-51	4/25/2022	7	$ 12,621.00		
Roper	406 S Charles St, 418 S Lawrence St, 423 S Lawrence St		4/26/2022	3	$ 8,790.00	3	$ 7,728.00
Lennar	Norborne Glebe	269-272, 282-285	4/28/2022	8	$ 23,440.00	8	$ 20,608.00
Dan Ryan	Tate Manor	47-52, 59-63	4/28/2020	11	$ 32,230.00	11	$ 28,336.00
Wormald	Beallair	156	5/13/2022	1	$ 2,930.00		
DRH	Magnolia Springs	13	5/16/2022	1	$ 2,930.00	1	$ 2,576.00
			Total	**346.12**	$ 1,114,371.92	**216.38**	$ 526,990.16

Charles Town Utility Board
2022 Capacity Improvement Fee Collections/EDU for Sewer

Month	Commercial	Residential	Total Number of EDU's	Total Sewer CIF Collected	CIF Paid to Ranson	Total
Jan-22	1.53	29	30.53	$ 71,735.60		$ 71,735.60
Feb-22		17	17	$ 23,319.00		$ 23,319.00
Mar-22	146.59	34	180.59	$ 662,151.32		$ 662,151.32
Apr-22		116	116	$ 351,306.00	$ 32,500.00	$ 318,806.00
May-22		2	2	$ 5,860.00		$ 5,860.00
Jun-22			0			$ -
Jul-22			0			$ -
Aug-22			0			$ -
Sep-22			0			$ -
Oct-22			0			$ -
Nov-22			0			$ -
Dec-22			0			$ -
Total 2022	**148.12**	**198**	**346.12**	**$ 1,114,371.92**	**$ 32,500.00**	**$ 1,081,871.92**

Charles Town Utility Board
2022 Capacity Improvement Fee Collections/EDU for Water

Month	Commercial	Residential	Total Number of EDU's	Total Water CIF
Jan-22		27	27	$ 69,552.00
Feb-22		15	15	$ 38,640.00
Mar-22	39.35	30	69.35	$ 148,238.16
Apr-22	23.03	81	104.03	$ 267,984.00
May-22		1	1	$ 2,576.00
Jun-22			0	
Jul-22			0	
Aug-22			0	
Sep-22			0	
Oct-22			0	
Nov-22			0	
Dec-22			0	
Total 2021	**62.38**	**154**	**216.38**	**$ 526,990.16**

Charles Town Utility Board
2021 Capacity Improvement Fee Collections/EDU for Sewer

Month	Commercial	Residential	Total Number of EDU's	Total Sewer CIF Collected	CIF Paid to Ranson	Total
Jan-21		22	22	$ 33,114.00		$ 33,114.00
Feb-21		21	21	$ 33,417.00	$ 9,750.00	$ 23,667.00
Mar-21		32	136.7	$ 154,023.33		$ 154,023.33
Apr-21		1	1	$ 3,207.00		$ 3,207.00
May-21		1	1	$ 1,127.00		$ 1,127.00
Jun-21	36	3	39	$ 118,833.00		$ 118,833.00
Jul-21		37	37	$ 45,859.00		$ 45,859.00
Aug-21	9.22	3	12.22	$ 35,029.54		$ 35,029.54
Sep-21		44	44	$ 53,748.00		$ 53,748.00
Oct-21		1	1	$ 3,207.00		$ 3,207.00
Nov-21		2	2	$ 6,414.00		$ 6,414.00
Dec-21		4	4	$ 6,588.00		$ 6,588.00
Total 2021	**45.22**	**124**	**320.92**	**$494,566.87**	**$9,750.00**	**$484,816.87**

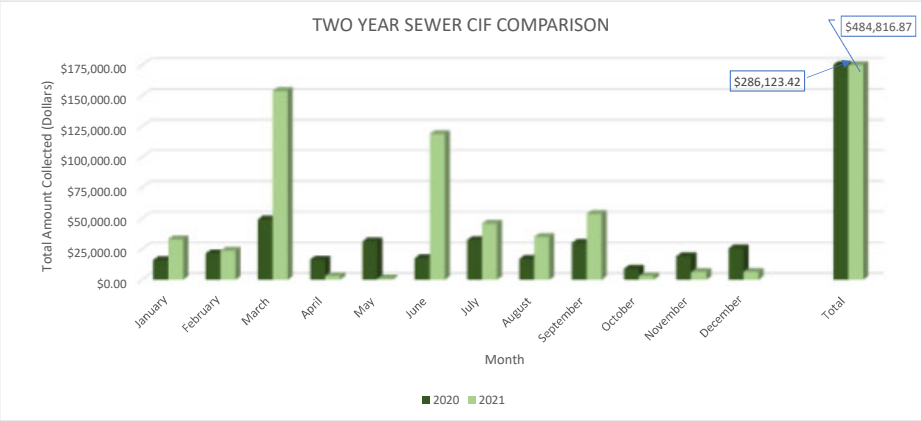

Charles Town Utility Board
2022 Capacity Improvement Fee Collections/EDU for Sewer

Month	Commercial	Residential	Total Number of EDU's	Total Sewer CIF Collected	CIF Paid to Ranson	Total
Jan-22	**1.53**	29.03	30.56	$ 71,735.60		$ 71,735.60
Feb-22		17	17	$ 23,319.00		$ 23,319.00
Mar-22	146.59	34	180.59	$ 662,151.32		$ 662,151.32
Apr-22		116	116	$ 351,306.00	$ 32,500.00	$ 318,806.00
May-22		2	2	$ 5,860.00		$ 5,860.00
Jun-22						
Jul-22						
Aug-22						
Sep-22						
Oct-22						
Nov-22						
Dec-22						
Total 2022	**1.53**	**164**	**346.15**	**$1,114,371.92**	**$32,500.00**	**$1,081,871.92**

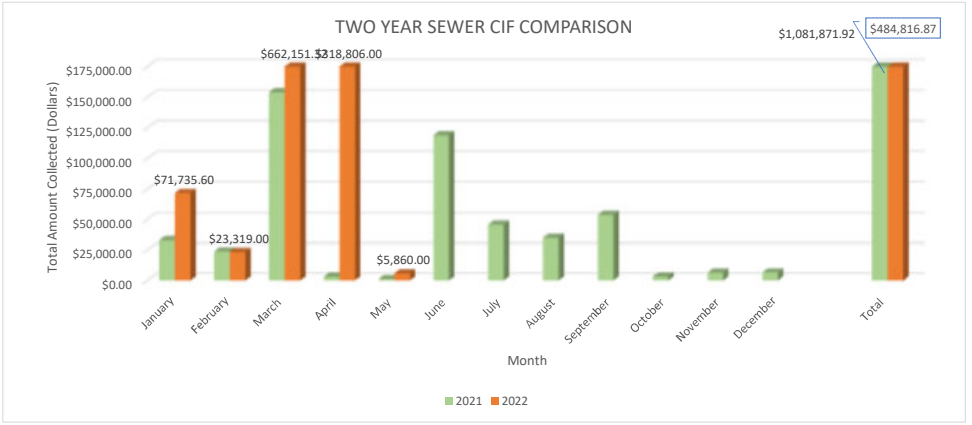

Charles Town Utility Board 2021 Capacity Improvement Fee Collections/EDU for Water				
Month	**Commercial**	**Residential**	**Total Number of EDU's**	**Total Water CIF**
Jan-21		18	18	$ 46,368.00
Feb-21		15	15	$ 38,640.00
Mar-21		32	32	$ 82,432.00
Apr-21				$ -
May-21		1	1	$ 2,576.00
Jun-21	36	3	39	$ 100,464.00
Jul-21		35	35	$ 90,160.00
Aug-21	7.42	2	9.42	$ 24,265.92
Sep-21		42	42	$ 108,192.00
Oct-21				$ -
Nov-21				$ -
Dec-21		2	2	$ 5,152.00
Total 2021	**43.42**	**108**	**193.42**	**$ 498,249.92**

Charles Town Utility Board 2022 Capacity Improvement Fee Collections/EDU for Water				
Month	**Commercial**	**Residential**	**Total Number of EDU's**	**Total Water CIF**
Jan-22		27	27	$ 69,552.00
Feb-22		15	15	$ 38,640.00
Mar-22	39.35	30	69.35	$ 148,238.16
Apr-22	23.03	81	104.03	$ 267,984.00
May-22		1	1	$ 2,576.00
Jun-22				
Jul-22				
Aug-22				
Sep-22				
Oct-22				
Nov-22				
Dec-22				
Total 2022	**62.38**	**154**	**216.38**	**$ 526,990.16**

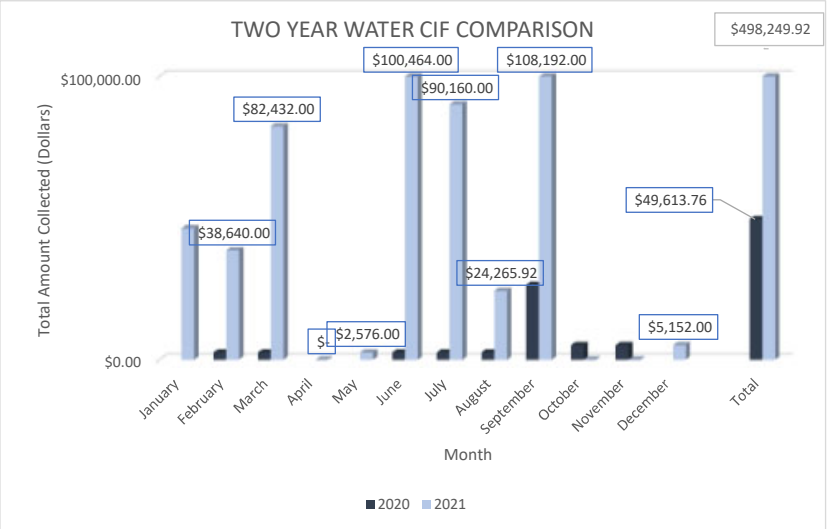

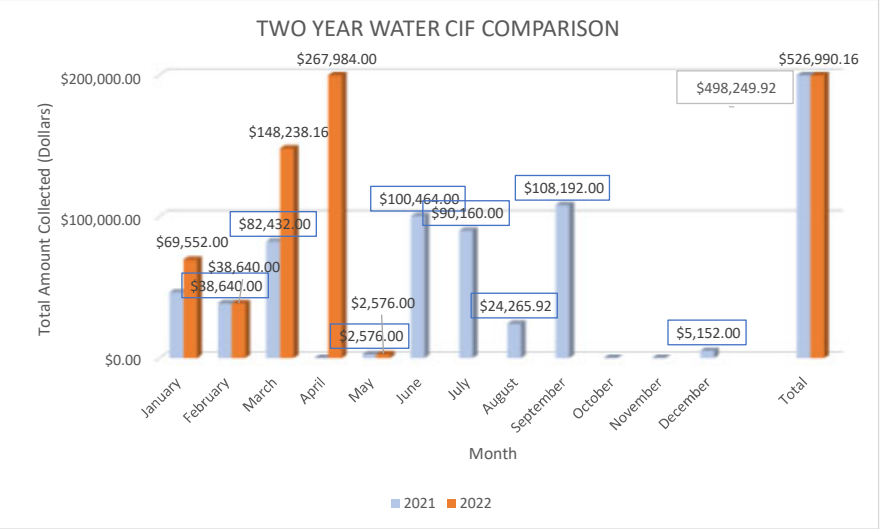

CHARLES TOWN UTILITY BOARD
WASTEWATER TREATMENT PLANT FLOW DATA

CHARLES TOWN WASTEWATER PLANT FLOW DATA						
YEAR	Total Design (MGD)	TOTAL ANNUAL FLOW (MG)	AVERAGE DAILY (MGD)	Total Design minus Average Daily	Total Available (gpd)	Total Available (EDU's)
2015	1.75	384	1.05	0.7	700,000	4,667
2016	1.75	419	1.14	0.61	610,000	4,067
2017	1.75	393	1.08	0.67	670,000	4,467
2018	1.75	491	1.34	0.41	410,000	2,733
2019	1.75	459	1.26	0.49	490,000	3,267
2020	1.75	419.7	1.15	0.60	603,333	4,022
2021	1.75	401.61	1.11	0.64	637,500	4,250
2022	1.75	137.31	1.15	0.61	605,000	4,033

TUSCAWILLA WASTEWATER PLANT FLOW DATA						
YEAR	Total Design (MGD)	TOTAL ANNUAL FLOW (MG)	AVERAGE DAILY (MGD)	Total Design minus Average Daily	Total Available (gpd)	Total Available (EDU's)
2015	0.5	48	0.13	0.37	370,000	2,467
2016	0.5	49	0.13	0.37	370,000	2,467
2017	0.5	48	0.14	0.36	360,000	2,400
2018	0.5	78	0.21	0.29	290,000	1,933
2019	0.5	55.24	0.15	0.35	350,000	2,333
2020	0.5	1.09	0.16	0.34	340,000	2,267
2021	0.5	32.55	0.10	0.40	400,833	2,672
2022	0.5	9.02	0.08	0.43	425,000	2,833

Total EDU's available between CT and Tuscawilla	
2015	7,133
2016	6,533
2017	6,867
2018	4,667
2019	5,600
2020	6,289
2021	6,922
2022	6,867

2020		
	Total	AVERAGE
JANUARY	39.05	1.26
FEBRUARY	36.74	1.27
MARCH	36.76	1.19
APRIL	33.32	1.11
MAY	35.50	1.15
JUNE	33.44	1.11
JULY	34.45	1.11
AUGUST	32.65	1.05
SEPTEMBER	32.43	1.08
OCTOBER	33.91	1.09
NOVEMBER	33.49	1.12
DECEMBER	37.96	1.22
Annual Total	419.7	1.15

2021		
	Total	AVERAGE
JANUARY	35.83	1.22
FEBRUARY	32.98	1.18
MARCH	36.39	1.17
APRIL	34.33	1.18
MAY	33.24	1.07
JUNE	36.24	1.21
JULY	30.99	1.00
AUGUST	29.94	0.97
SEPTEMBER	36.36	1.17
OCTOBER	29.97	0.97
NOVEMBER	30.12	1.00
DECEMBER	35.22	1.21
Annual Total	401.61	1.11

2022		
	Total	AVERAGE
JANUARY	37.25	1.20
FEBRUARY	33.8	1.21
MARCH	33.28	1.07
APRIL	32.98	1.1
MAY		
JUNE		
JULY		
AUGUST		
SEPTEMBER		
OCTOBER		
NOVEMBER		
DECEMBER		
Annual Total	137.31	1.15

2020		
	Total	AVERAGE
JANUARY		
FEBRUARY		
MARCH		
APRIL		
MAY		
JUNE		
JULY		
AUGUST	1.09	0.16
SEPTEMBER		
OCTOBER		
NOVEMBER		
DECEMBER		
Annual Total	1.09	0.16

2021		
	Total	AVERAGE
JANUARY	0.52	0.07
FEBRUARY	2.22	0.08
MARCH	4.22	0.14
APRIL	1.12	0.04
MAY	0.89	0.03
JUNE	3.37	0.11
JULY	3.9	0.13
AUGUST	3.6	0.12
SEPTEMBER	4.53	0.15
OCTOBER	3.94	0.13
NOVEMBER	3.73	0.12
DECEMBER	0.51	0.07
Annual Total	32.55	0.10

2022		
	Total	AVERAGE
JANUARY	0	0
FEBRUARY	0	0
MARCH	4.34	0.14
APRIL	4.68	0.16
MAY		
JUNE		
JULY		
AUGUST		
SEPTEMBER		
OCTOBER		
NOVEMBER		
DECEMBER		
Annual Total	9.02	0.08

CHARLES TOWN UTILITY BOARD
WATER TREATMENT PLANT FLOW DATA

CHARLES TOWN WATER PLANT FLOW DATA						
YEAR	Total Design (MGD)	TOTAL ANNUAL FLOW (MG)	AVERAGE DAILY (MGD)	Total Design minus Average Daily	Total Available (gpd)	Total Available (EDU's)
2019	2.8	644.32	1.77	1.03498	1,034,980	6,900
2020	2.8	615.64	1.68	1.12	1,117,946	7,453
2021	2.8	601.87	1.64	1.16	1,164,627	7,764
2022	2.8	186.98	1.55	1.25	1,249,325	8,329

2020		
	Total	AVERAGE
JANUARY	53,689,445	1,731,918
FEBRUARY	49,700,448	1,713,809
MARCH	51,009,216	1,645,459
APRIL	46,966,864	1,565,562
MAY	50,753,036	1,637,195
JUNE	52,587,142	1,752,905
JULY	54,394,477	1,754,661
AUGUST	54,972,785	1,773,316
SEPTEMBER	50,996,141	1,699,871
OCTOBER	51,222,251	1,652,331
NOVEMBER	49,014,344	1,633,811
DECEMBER	50,338,278	1,623,815
Annual Total	615,644,427	1,682,054

2021		
	Total	AVERAGE
JANUARY	50,030,727	1,613,894
FEBRUARY	45,304,029	1,618,001
MARCH	50,881,983	1,641,354
APRIL	49,098,224	1,636,607
MAY	53,910,537	1,739,050
JUNE	53,051,728	1,711,346
JULY	53,198,248	1,716,073
AUGUST	54,959,872	1,772,899
SEPTEMBER	49,200,580	1,587,115
OCTOBER	49,336,781	1,591,509
NOVEMBER	45,777,260	1,476,686
DECEMBER	47,118,143	1,519,940
Annual Total	601,868,112	1,635,373

2022		
	Total	AVERAGE
JANUARY	47,918,736	1,545,766
FEBRUARY	43,703,896	1,580,853
MARCH	48,063,482	1,550,435
APRIL	47,294,978	1,525,644
MAY		
JUNE		
JULY		
AUGUST		
SEPTEMBER		
OCTOBER		
NOVEMBER		
DECEMBER		
Annual Total	186,981,092	1,550,675

GLEN HAVEN WATER PLANT FLOW DATA						
YEAR	Total Design (MGD)	TOTAL ANNUAL FLOW (MG)	AVERAGE DAILY (MGD)	Total Design minus Average Daily	Total Available (gpd)	
2020	0.0216	1.04	0.01	0.01	13,120	
2021	0.0216	3.06	0.01	0.01	13,213	-
2022	0.0216	0.80	0.01	0.02	15,180	-

2020		
	Total	AVERAGE
JANUARY		
FEBRUARY		
MARCH		
APRIL		
MAY		
JUNE		
JULY		
AUGUST		
SEPTEMBER	283,900	9,158
OCTOBER	265,000	8,548
NOVEMBER	250,800	8,360
DECEMBER	243,500	7,855
Annual Total	1,043,200	8,480

2021		
	Total	AVERAGE
JANUARY	242,200	7,813
FEBRUARY	203,500	7,268
MARCH	241,800	8,636
APRIL	262,300	8,743
MAY	289,700	9,345
JUNE	276,500	8,919
JULY	302,900	9,771
AUGUST	302,900	9,771
SEPTEMBER	227,800	7,348
OCTOBER	285,100	9,197
NOVEMBER	227,200	7,329
DECEMBER	201,500	6,500
Annual Total	3,063,400	8,387

2022		
	Total	AVERAGE
JANUARY	204,300	6,590
FEBRUARY	178,600	5,761
MARCH	191,200	6,168
APRIL	222,000	7,161
MAY		
JUNE		
JULY		
AUGUST		
SEPTEMBER		
OCTOBER		
NOVEMBER		
DECEMBER		
Annual Total	796,100	6,420

CAVALAND WATER PLANT FLOW DATA						
YEAR	Total Design (MGD)	TOTAL ANNUAL FLOW (MG)	AVERAGE DAILY (MGD)	Total Design minus Average Daily	Total Available (gpd)	
2020	0.036	0.59	0.00	0.03	31,210	
2021	0.036	1.91	0.01	0.03	30,766	
2022	0.036	0.55	0.00	0.03	31,571	

2020		
	Total	AVERAGE
JANUARY		
FEBRUARY		
MARCH		
APRIL		
MAY		
JUNE		
JULY		
AUGUST		
SEPTEMBER	141,900	4,577
OCTOBER	140,300	4,526
NOVEMBER	151,500	5,050
DECEMBER	155,200	5,006
Annual Total	588,900	4,790

2021		
	Total	AVERAGE
JANUARY	150,900	4,868
FEBRUARY	132,900	4,746
MARCH	145,800	5,207
APRIL	152,900	5,097
MAY	177,900	5,739
JUNE	159,000	5,129
JULY	169,600	5,471
AUGUST	177,300	5,719
SEPTEMBER	175,600	5,665
OCTOBER	176,000	5,677
NOVEMBER	151,200	4,877
DECEMBER	143,000	4,613
Annual Total	1,912,100	5,234

2021		
	Total	AVERAGE
JANUARY	150,100	4,842
FEBRUARY	127,200	4,103
MARCH	130,300	4,203
APRIL	141,600	4,568
MAY		
JUNE		
JULY		
AUGUST		
SEPTEMBER		
OCTOBER		
NOVEMBER		
DECEMBER		
Annual Total	549,200	4,429

Charles Town Water Department
Revenue & Expense Summary
4/30/2022

Annual Budget		Y-T-D Budget	Y-T-D Actual	Difference
	REVENUES			
2,650,000	Metered Sales - Residential	2,208,333	2,146,015	(62,318)
1,330,000	Metered Sales - Commercial	1,108,333	1,073,752	(34,581)
105,000	Metered Sales - Glen Haven/Cavaland	87,500	81,545	(5,955)
20,000	Sale for Resale - Bulk Water	16,667	11,473	(5,193)
80,000	Forfieted Discounts	66,667	57,609	(9,058)
25,000	Misc. Service Rev - Reconnection / Tap Fees	20,833	17,500	(3,333)
525,000	Tank Lot Rental Income	437,500	421,395	(16,105)
8,000	Interest Income	6,667	4,047	(2,620)
2,000	Sinking Fund Income	1,667	72	(1,594)
75,000	Miscellaneous Income	62,500	73,730	11,230
0	Grant Revenue - OEHS SWAP EWM	-	46,765	46,765
0	CIF & CAC Revenue	-	780,520	780,520
0	Checking Acct @ 6/30/21	-	551,603	551,603
4,820,000	**TOTAL REVENUES**	4,016,667	5,266,027	1,249,361
	EXPENSES			
15,000	Supplies & Expense	12,500	2,076	(10,424)
20,000	Maint of Water Source	16,667	18,041	1,374
340,000	Operation Labor - WTP	283,333	280,839	(2,495)
125,000	Power & Fuel - WTP	104,167	96,003	(8,163)
6,000	Power & Fuel - WTP GH/CAV	5,000	5,072	72
130,000	Chemicals	108,333	105,483	(2,850)
45,000	Testing	37,500	29,795	(7,705)
20,000	Supplies & Expense - WTP	16,667	11,212	(5,455)
10,000	Supplies & Expense - GH/CAV	8,333	2,248	(6,085)
100,000	Maint Water Treatment Plant	83,333	92,207	8,874
10,000	Maint of Water Plant - GH/CAV	8,333	5,640	(2,694)
445,000	Maintenance Labor	370,833	381,323	10,490
20,000	Supplies & Expense - Maint	16,667	14,403	(2,264)
82,000	Maint Dist Reservior & Standpipes	68,333	75,058	6,725
150,000	Maint of Mains	125,000	77,110	(47,890)
200,000	Maint of Services	166,667	91,080	(75,587)
175,000	Maint of Meters	145,833	92,089	(53,744)
20,000	Maint of Hydrants	16,667	4,703	(11,964)
160,000	Accounting & Collecting Labor	133,333	132,110	(1,224)
25,000	Supplies & Expense - Acct & Collect	20,833	9,708	(11,125)
15,000	Bad Debt Expense	12,500	3,517	(8,983)
120,000	Admin & General Salaries	100,000	105,355	5,355
160,000	Employee Insurance & Benefits	133,333	127,576	(5,757)
107,000	Employee Pension Expense	89,167	85,548	(3,619)
82,000	Payroll Taxes - FICA Tax Expense	68,333	69,268	935

Charles Town Water Department
Revenue & Expense Summary
4/30/2022

24,000	OPEB (other post empl benefits)	20,000	14,505	(5,495)
114,000	Office Supplies & Other Expense	95,000	94,097	(903)
15,000	Maintenance of General Property	12,500	6,390	(6,110)
80,000	Contractual Services - Engineering	66,667	64,361	(2,305)
20,000	Contractual Services - Accounting	16,667	19,341	2,674
15,000	Contractual Services - Legal	12,500	5,049	(7,451)
65,000	Contractual Services - Other	54,167	60,037	5,870
45,000	Transportation Expense	37,500	41,729	4,229
80,000	Property Insurance	66,667	74,393	7,727
35,000	Injuries & Damages	29,167	30,337	1,170
20,000	Regulatory Commission Expense	16,667	3,789	(12,877)
6,000	Bond Administration Fees	5,000	4,108	(892)
10,000	Misc General Expense	8,333	4,879	(3,454)
1,180,000	Depreciation Expense	983,333	983,333	(0)
445,000	Interest on Long Term debt	370,833	397,608	26,775
78,000	Amortization - Bond Discount	65,000	65,000	-
0	Bond Issuance Costs	-	139,733	139,733
4,814,000	**TOTAL EXPENSES**	4,011,667	3,926,151	(85,516)

6,000	Excess (Deficit)	5,000	1,339,876	
	Reconciliation to Cash:			
	Cash Balance @ 6/30/21		551,603	
	Disbursements To Date		(4,471,980)	
	Expenses		3,926,151	
	Deposits To Date		4,568,137	
	Revenues		(5,266,027)	
	CASH BALANCE @ 4/30/2022		647,761	
			647,761	Water Operating
			0	
	Water Capacity Improvement Fees		2,560,439	
	Water Renewal & Replacement		758,530	
	Water Working Capital Fund		367,032	

Charles Town Sewer Department
Revenue & Expense Summary
4/30/2022

Annual Budget		Y-T-D Budget	Y-T-D Actual	Difference
	REVENUES			
2,340,000	CTUB Service Revenue	1,950,000	1,943,701	(6,299)
1,390,000	Sewer Service Revenue - Ranson	1,158,333	1,163,117	4,783
2,460,000	Sewer Service Revenue - JCPSD	2,050,000	2,061,027	11,027
40,000	Customer Forfieted Discounts	33,333	31,010	(2,323)
27,000	Customer Forfieted Discounts- RA	22,500	18,862	(3,638)
50,000	Customer Forfieted Discounts- PSD	41,667	33,131	(8,536)
42,000	Misc. Sewer Revenues	35,000	18,061	(16,939)
0	CIF & CAC Revenues	-	1,268,154	1,268,154
8,000	Interest Income	6,667	5,742	(925)
3,000	Sinking Fund Income	2,500	75	(2,425)
0	Checking Acct @ 6/30/21	-	2,046,245	2,046,245
6,360,000	**TOTAL REVENUES**	5,300,000	8,589,125	3,289,125
	EXPENSES			
20,000	Supplies & Expense	16,667	9,201	(7,466)
50,000	Maint of Service Connections	41,667	41,637	(30)
300,000	Maint of Collecting & Trans. Mains	250,000	128,513	(121,487)
355,000	Operation Labor	295,833	264,448	(31,385)
135,000	Power & Fuel	112,500	90,813	(21,687)
25,000	Supplies & Expense	20,833	10,823	(10,010)
250,000	Maint of Pump Stations	208,333	129,323	(79,011)
242,000	Operation Labor	201,667	194,012	(7,654)
130,000	Power - CT Plant	108,333	104,189	(4,144)
75,000	Power - TUI	62,500	66,194	3,694
10,000	Power - Deerfield	8,333	5,895	(2,439)
155,000	Chemical Expense - CT	129,167	119,070	(10,096)
20,000	Chemical Expense - TUI	16,667	14,724	(1,943)
35,000	Testing - CT	29,167	23,000	(6,166)
7,000	Testing - TUI	5,833	4,339	(1,495)
102,000	Supplies & Expense	85,000	81,857	(3,143)
120,000	Maint. Burns Farm	100,000	60,782	(39,218)
240,000	Maint. Treatment Plant - CT	200,000	94,214	(105,786)
80,000	Maint. Treatment Plant - TUI	66,667	60,312	(6,355)
15,000	Maint. Treatment Plant - Deerfield	12,500	19,078	6,578
212,000	Billing, Collecting & Accounting Labor	176,667	174,987	(1,680)
90,000	Billing Fees Expense	75,000	73,511	(1,489)
25,000	Bad Debt Expense	20,833	9,257	(11,577)
185,000	Admin. & General Salaries	154,167	141,521	(12,646)
150,000	Employee Insurance & Benefits	125,000	119,131	(5,869)
100,000	Employee Pension Expense	83,333	75,696	(7,637)
77,000	Payroll Taxes - FICA Tax Expense	64,167	60,118	(4,049)
26,000	OPEB (other post empl. benefits)	21,667	13,287	(8,380)

Charles Town Sewer Department
Revenue & Expense Summary
4/30/2022

135,000	Office Supplies & Expense	112,500	104,270	(8,230)
35,000	Maint. of General Property	29,167	19,723	(9,444)
60,000	Contractual Services - Engineering	50,000	44,654	(5,346)
32,000	Contractual Services - Accounting	26,667	27,015	348
170,000	Contractual Services - Legal	141,667	130,647	(11,020)
78,000	Contractual Services - Other	65,000	43,896	(21,104)
65,000	Transportation Expense	54,167	61,028	6,861
110,000	Insurance	91,667	90,706	(961)
36,000	Worker's Comp	30,000	24,211	(5,789)
30,000	Regulatory Commission Expense	25,000	9,244	(15,756)
71,000	Bond Administration Fees	59,167	37,899	(21,268)
10,000	Misc. General Expense	8,333	6,617	(1,717)
1,800,000	Depreciation Expense	1,500,000	1,500,000	-
325,000	Interest on Long Term Debt	270,833	179,061	(91,772)
0	Interest Expense	-	59,888	59,888
57,000	Amort. Of Debt Discount & Expense	47,500	47,500	-
0	Bond Issuance Costs	-	32,856	
6,245,000	**TOTAL EXPENSES**	5,204,167	4,609,143	(627,879)
115,000	**Excess (Deficit)**	95,833	3,979,981	
	Reconciliation to Cash:			
	Cash Balance @ 6/30/21		2,046,245	
	Disbursements To Date		(5,186,760)	
	Expenses		4,609,143	
	Deposits To Date		5,431,088	
	Revenues		(8,589,125)	
	CASH BALANCE 4/30/2022		2,290,573	
			2,290,573	Sewer Operating
			(0)	
	Sewer Capacity Improvement Fees		3,602,304	
	Sewer Renewal & Replacement		679,952	
	Sewer Working Capital Fund		705,088	

VENDOR SORT KEY	DESCRIPTION	FUND	DEPARTMENT	AMOUNT

FUND TOTALS		
50	WATER FUND	174,956.49
60	SEWER FUND	71,529.79
	GRAND TOTAL:	246,486.28

TOTAL PAGES: 5

APPROVED BY: _____

APPROVED BY: _____

This Packet: $ 246,486.28
Security Deposit refunds: 2,061.58

Total: $ 248,547.86

Note:

Highlighted is for the R&R Project;

Highlighted, $8,422.05 (12%) to be reimbursed from the Water CIF Account

VENDOR SORT KEY	DESCRIPTION	FUND	DEPARTMENT		AMOUNT
	R&R 2022 4/27/22	SEWER FUND	NON-DEPARTMENTAL		102.00
	GENERAL 4/06 - 4/29/22	SEWER FUND	SEWER		918.00
	SHEN JCT 4/04 - 4/29/22	SEWER FUND	SEWER		748.00
	CAVERD UTILITIES 4/04 - 4/	SEWER FUND	SEWER		2,074.00
	TOLBERT 4/13 - 4/23/22	SEWER FUND	SEWER		391.00
				TOTAL:	5,712.00
SMITH & LOVELESS INC	CMPRSRAR1/8HP,PMPVC1/2HP1/	SEWER FUND	SEWER		1,394.87
				TOTAL:	1,394.87
SPRINT	MONTHLY CELL SERVICE	WATER FUND	WATER		186.61
	MONTHLY CELL SERVICE	SEWER FUND	SEWER		238.63
				TOTAL:	425.24
STEPTOE & JOHNSON PLLC	GENERAL ENVIRONMENTAL	SEWER FUND	SEWER		3,991.06
	GENERAL EMPLOYER COUNSELIN	SEWER FUND	SEWER		322.50
				TOTAL:	4,313.56
STH, INC.	PS5-1:GRUNDFOS SUBMERSIBLE	SEWER FUND	SEWER		13,120.00
				TOTAL:	13,120.00
SUEZ TREATMENT SOLUTIONS, INC	LAMP, BALLAST	SEWER FUND	SEWER		5,074.53
				TOTAL:	5,074.53
GERALD TAYLOR CO., INC.	VAC / TRANSPORT	WATER FUND	WATER		538.04
	PUMP / TRANSPORT	WATER FUND	WATER		801.00
	PUMP / TRANSPORT	WATER FUND	WATER		284.72
	PUMP / TRANSPORT	WATER FUND	WATER		321.90
	TRANSPORT	SEWER FUND	SEWER		1,726.56
	TRANSPORT	SEWER FUND	SEWER		2,087.91
				TOTAL:	5,760.13
THE CI THORNBURG CO, INC.	CRO5/8"SRIITRPL100GCNVRSNR	WATER FUND	WATER		2,274.27
	CRO5/8"SRIITRPL100GCNVRSNR	WATER FUND	WATER		2,199.91
	CHLORINE	WATER FUND	WATER		2,075.00
				TOTAL:	6,549.18
US PAVING, LLC	PAVING: 3/03/22	WATER FUND	WATER		2,100.00
	PAVING: 3/03/22	WATER FUND	WATER		2,640.00
	PAVING: 3/18/22	WATER FUND	WATER		2,400.00
	PAVING: 3/03/22	SEWER FUND	SEWER		1,800.00
	PAVING: 3/04/22	SEWER FUND	SEWER		5,268.00
				TOTAL:	14,208.00
WAKEFIELD & ASSOCIATES INC	APR COLLECTIONS	WATER FUND	WATER		142.87
	APR COLLECTIONS	SEWER FUND	SEWER		142.86
				TOTAL:	285.73
WIRELESS NETWORKS GROUP, INC.	MISC SVCS, APR	WATER FUND	WATER		9,800.00
				TOTAL:	9,800.00

VENDOR SORT KEY	DESCRIPTION	FUND	DEPARTMENT		AMOUNT
HULL'S CRANE SERVICE, INC	CRANE RENTAL: JOHNRISSLER	WATER FUND	WATER		740.00
				TOTAL:	740.00
PROTOUCH COMMUNICATIONS, LLC	APR SVCS: AFTER-HRS EMERGE	WATER FUND	WATER		38.30
	APR SVCS: AFTER-HRS EMERGE	SEWER FUND	SEWER		38.29
				TOTAL:	76.59
INWOOD QUARRY, INC.	I10 & C2 PICKUPS: 4/27/22	WATER FUND	WATER		618.95
	I8 & C1 & C2 PICKUPS: 4/28	WATER FUND	WATER		629.59
	C1 PICKUPS: 4/29/22	WATER FUND	WATER		367.61
				TOTAL:	1,616.15
IRON MOUNTAIN, INC	SHREDDING, STORAGE	WATER FUND	WATER		255.97
	SHREDDING, STORAGE	SEWER FUND	SEWER		255.96
				TOTAL:	511.93
METLIFE, INC	STD & LTD & AD&D PREMIUMS	WATER FUND	WATER		778.27
	STD & LTD & AD&D PREMIUMS	SEWER FUND	SEWER		588.78
				TOTAL:	1,367.05
DONALD MICKEY	APR MOWING SMMTPT & PLYGRN	WATER FUND	WATER		125.00
	APR MOWING SMMTPT & PLYGRN	SEWER FUND	SEWER		125.00
				TOTAL:	250.00
MICRO-TECH DESIGNS, INC.	ENGNRNGHRS WWTPMODS BLWRCN	SEWER FUND	SEWER		750.50
				TOTAL:	750.50
JOHN MURPHY, JR	REIMB MAY PREMIUM GUARDIAN	SEWER FUND	SEWER		91.70
				TOTAL:	91.70
THOMAS NALLS	APR TANK LOT RENT	WATER FUND	NON-DEPARTMENTAL		4,282.27
				TOTAL:	4,282.27
NB & C ENGINEERING SERVICES, LLC	STRUCTURAL ANALYSIS SAWGRA	WATER FUND	WATER		1,100.00
				TOTAL:	1,100.00
LOGICAL CONCEPTS, INC	FLWNGSPRGS,GRNFLDSTH4-5,BU	SEWER FUND	SEWER		427.00
				TOTAL:	427.00
PACE ANALYTICAL SERVICES, LLC	TESTING: WV3301972 CAV 1PR	WATER FUND	WATER		1,189.00
	TESTING: WTP	WATER FUND	WATER		1,148.00
	TESTING: WV002349/001 WKLY	SEWER FUND	SEWER		177.00
	TESTING: TUSC WKLY	SEWER FUND	SEWER		222.00
	TESTING: TUSC WKLY	SEWER FUND	SEWER		100.00
	TESTING: CT WKLY	SEWER FUND	SEWER		177.00
	TESTING: APPLVLY QTR	SEWER FUND	SEWER		82.00
				TOTAL:	3,095.00
CORPORATION OF RANSON	FAIRFAX BLVD WATERLINE LOO	WATER FUND	NON-DEPARTMENTAL		70,183.75
				TOTAL:	70,183.75
ROSS H BARE	DLVRY 24VLT PWRSPPLY & 3'D	WATER FUND	WATER		88.00
				TOTAL:	88.00
LAW OFFICES OF HOY SHINGLETON, L.C.	GENERAL 4/06 - 4/29/22	WATER FUND	WATER		1,088.00
	TOLBERT 4/13 - 4/23/22	WATER FUND	WATER		391.00

VENDOR SORT KEY	DESCRIPTION	FUND	DEPARTMENT		AMOUNT
COYNE CHEMICAL	AMMONIUM SULFATE 40%, CP-8	WATER FUND	WATER		4,062.80
				TOTAL:	4,062.80
DAS GROUP, INC	KROHNEOPTIWAVERDRLVLSNSR,P	WATER FUND	WATER		3,692.94
				TOTAL:	3,692.94
WV DEPT OF HEALTH & HUMAN SERVICES	BACTERIOLOGICAL TEST	WATER FUND	WATER		40.00
	BACTERIOLOGICAL TEST	WATER FUND	WATER		120.00
	BACTERIOLOGICAL TEST	WATER FUND	WATER		100.00
				TOTAL:	260.00
DOCUMENT SOLUTIONS, INC	INK FOR PLOTTER	WATER FUND	WATER		919.12
				TOTAL:	919.12
ENCOVA INSURANCE	INSTALLMENT	WATER FUND	WATER		2,735.20
	INSTALLMENT	SEWER FUND	SEWER		2,524.80
				TOTAL:	5,260.00
FIDELITY ENGINEERING LLC	HUNTFIELD PS: TRBLSHT ATS	SEWER FUND	SEWER		1,075.00
				TOTAL:	1,075.00
FIFTH THIRD BANK	PCARD 4726	WATER FUND	WATER		1,595.05
	PCARD 4726	WATER FUND	WATER		1,072.94
	PCARD 4726	WATER FUND	WATER		2,502.57
	PCARD 4726	WATER FUND	WATER		101.38
	PCARD 4726	WATER FUND	WATER		40.79
	PCARD 4726	SEWER FUND	SEWER		1,618.60
	PCARD 4726	SEWER FUND	SEWER		1,024.43
	PCARD 4726	SEWER FUND	SEWER		1,234.64
	PCARD 4726	SEWER FUND	SEWER		38.94
	PCARD 4726	SEWER FUND	SEWER		632.88
	PCARD 4726	SEWER FUND	SEWER		100.35
	PCARD 4726	SEWER FUND	SEWER		290.91
	PCARD 4726	SEWER FUND	SEWER		11.95
				TOTAL:	10,265.43
FRONTIER COMMUNICATIONS	304-876-9970-121914-4	WATER FUND	WATER		94.91
	304-876-2120-111514-4	WATER FUND	WATER		94.91
				TOTAL:	189.82
GUTTMAN ENERGY	W/E 4/24/22	WATER FUND	WATER		761.40
	W/E 5/01/22	WATER FUND	WATER		1,085.49
	W/E 4/24/22	SEWER FUND	SEWER		606.37
	W/E 5/01/22	SEWER FUND	SEWER		1,270.36
				TOTAL:	3,723.62
GWIN DOBSON & FOREMAN INC	WWTP UPGRADE	SEWER FUND	NON-DEPARTMENTAL		4,166.13
	DEERFIELD ASSESMENT	SEWER FUND	SEWER		546.00
	CAVE RD ASSESMENT	SEWER FUND	SEWER		980.58
				TOTAL:	5,692.71
HACH COMPANY	ORTHOPHOSHATE, MONO-CHLOR,	WATER FUND	WATER		801.95
	SPADNS2 FLUORIDE RGT	WATER FUND	WATER		468.80
	AAKTO REAGENTSET CHLORINE	WATER FUND	WATER		650.96
	AMMONIA TNT, ULR	SEWER FUND	SEWER		461.10
				TOTAL:	2,382.81

VENDOR SORT KEY	DESCRIPTION	FUND	DEPARTMENT	AMOUNT
AUTOZONE	MOTOR OIL	WATER FUND	WATER	26.45
			TOTAL:	26.45
BIEDLER'S ELECTRIC MOTOR REPAIR, INC.	AERATORS@ GOLF COURSE POND	SEWER FUND	SEWER	472.05
			TOTAL:	472.05
JP & RF BURNS PARTNERSHIP	APR LOADS - 37	SEWER FUND	SEWER	6,623.00
			TOTAL:	6,623.00
CARAHSOFT TECHNOLOGY CORPORATION	WATERCAD STANDALONE PIPES	WATER FUND	WATER	4,362.00
			TOTAL:	4,362.00
CASTO & HARRIS, INC.	2500 LASER CKS YELLOW #157	WATER FUND	WATER	166.18
	2500 LASER CKS YELLOW #157	SEWER FUND	SEWER	166.17
			TOTAL:	332.35
CONTROL EQUIPMENT COMPANY INC	CHLRN RGNT ST FR PRCS CHLR	WATER FUND	WATER	348.34
			TOTAL:	348.34
CHARLES TOWN PLUMBING LLC	708 W LIBERTY ST	WATER FUND	WATER	1,750.00
			TOTAL:	1,750.00
CHARLES TOWN UTILITY BOARD	APRIL FUNDING	WATER FUND	NON-DEPARTMENTAL	17,643.10
			TOTAL:	17,643.10
CITY NATIONAL BANK	LOCKBOX SVCS: APR	WATER FUND	WATER	1,653.09
	LOCKBOX SVCS: APR	WATER FUND	WATER	715.80
	LOCKBOX SVCS: APR	SEWER FUND	SEWER	1,653.08
	LOCKBOX SVCS: APR	SEWER FUND	SEWER	715.80
			TOTAL:	4,737.77
CITY OF CHARLES TOWN	MAR UTILITIES@ 661 S GEORG	WATER FUND	WATER	500.04
	MAY RENT@ 661 S GEORGE ST	WATER FUND	WATER	1,275.00
	MAR UTILITIES@ 661 S GEORG	SEWER FUND	SEWER	500.03
	MAY RENT@ 661 S GEORGE ST	SEWER FUND	SEWER	1,275.00
			TOTAL:	3,550.07
CLIFFS CLEANING SERVICE	APR CLEANING	WATER FUND	WATER	125.00
	APR CLEANING	WATER FUND	WATER	365.00
	APR CLEANING	SEWER FUND	SEWER	200.00
	APR CLEANING	SEWER FUND	SEWER	100.00
	APR CLEANING	SEWER FUND	SEWER	365.00
			TOTAL:	1,155.00
COMCAST BUSINESS	8299 31 008 0138502	WATER FUND	WATER	179.69
	8299 31 008 0138502	SEWER FUND	SEWER	179.69
			TOTAL:	359.38
CORE & MAIN	FL36MNTRCOVFLG36"TLE,AYM74	WATER FUND	WATER	7,343.32
	RML-12-T1HOLEEREADDBLHVYLI	WATER FUND	WATER	405.98
	721-207WDQQ335/8X3/4SETTER	WATER FUND	WATER	5,230.56
	721-207WDQQ335/8X3/4SETTER	WATER FUND	WATER	2,615.28
	VALVE BOX RISER	WATER FUND	WATER	522.42
	MAX6CLAY/DI/AC/CI/PLCPLG	SEWER FUND	SEWER	261.78
			TOTAL:	16,379.34

VENDOR SORT KEY	DESCRIPTION	FUND	DEPARTMENT	AMOUNT
WV WATER DEVELOPMENT AUTHORITY	#2017-175 INFRSTRCTR FNDPR	SEWER FUND	NON-DEPARTMENTAL	920.59
			TOTAL:	920.59

FUND TOTALS	
50 WATER FUND	79,119.48
60 SEWER FUND	110,565.38
GRAND TOTAL:	189,684.86

TOTAL PAGES: 4

APPROVED BY: _____

APPROVED BY: _____

This Packet: $ 189,684.86

Security Deposit refunds: 2,384.88

Total: $ 192,069.74

Note:

Highlighted is for the Collection System Project

VENDOR SORT KEY	DESCRIPTION	FUND	DEPARTMENT	AMOUNT
M.J. FRIEDL & ASSOCIATES, INC	SEWER CAMERA REPAIR	SEWER FUND	SEWER	729.63
			TOTAL:	729.63
PACE ANALYTICAL SERVICES, LLC	TESTING: CT MNTHLY	SEWER FUND	SEWER	218.00
	TESTING: QRTLY WV3301905	SEWER FUND	SEWER	665.00
			TOTAL:	883.00
QUALITY FENCE & DECK CO	PS FENCING	SEWER FUND	SEWER	6,250.00
			TOTAL:	6,250.00
RK & K ENGINEERS	TO6&7 NTHNLDR WA&SWRLN EXT	WATER FUND	WATER	1,757.70
	TO12FRSTAVE/FRFXXNG/LKLNDP	SEWER FUND	NON-DEPARTMENTAL	15,835.76
	TO19 2021 CLLCTNSYSTM PRJC	SEWER FUND	NON-DEPARTMENTAL	28,852.20
	TO6&7 NTHNLDR WA&SWRLN EXT	SEWER FUND	SEWER	1,458.00
	TO 20 FRITZ PRPRTY RVW	SEWER FUND	SEWER	2,208.60
			TOTAL:	50,112.26
SHENANDOAH SALES & SERVICE, INC.	SERVICE	WATER FUND	WATER	306.91
	FENCE WELD: KEYES FERRY RD	SEWER FUND	SEWER	388.00
	BRAKES	SEWER FUND	SEWER	656.81
	SERVICE	SEWER FUND	SEWER	139.59
	SERVICE	SEWER FUND	SEWER	120.69
	SERVICE	SEWER FUND	SEWER	171.64
	SERVICE	SEWER FUND	SEWER	272.24
	SERVICE	SEWER FUND	SEWER	174.79
			TOTAL:	2,230.67
SOVOS COMPLIANCE, LLC	RPTG UNCLMD PRP ANNUAL	WATER FUND	WATER	330.23
	RPTG UNCLMD PRP ANNUAL	SEWER FUND	SEWER	330.22
			TOTAL:	660.45
STEPTOE & JOHNSON PLLC	GENERAL EMPLOYER COUNSELIN	WATER FUND	WATER	1,075.00
	GENERAL ENVIRONMENTAL	SEWER FUND	SEWER	1,893.75
			TOTAL:	2,968.75
STH, INC.	DEERFIELD: MYERS EFFLUENT	SEWER FUND	SEWER	3,300.00
			TOTAL:	3,300.00
GERALD TAYLOR CO., INC.	VAC / TRANSPORT	WATER FUND	WATER	536.93
	PUMP / TRANSPORT	WATER FUND	WATER	541.77
	TRANSPORT	SEWER FUND	SEWER	887.04
	SUPERVAC	SEWER FUND	SEWER	2,476.32
			TOTAL:	4,442.06
THE CI THORNBURG CO, INC.	CRO5/8"SRIITRPL100GCNVRSNR	WATER FUND	WATER	2,626.91
	5/8"X3/4"SRIITRPL100GPL/BT	WATER FUND	WATER	4,345.16
			TOTAL:	6,972.07
CALIFORNIA STATE CONTROLLER-BETTY T YE	RY 2022 UNCLAIMED PROPERTY	WATER FUND	NON-DEPARTMENTAL	93.83
			TOTAL:	93.83
VITAL SIGNS	PUMPSTATION SIGN ALUMINUM	SEWER FUND	SEWER	35.00
			TOTAL:	35.00
WV BUREAU OF PUBLIC HEALTH	T.MARKLEY CLS C&S CERTS	SEWER FUND	SEWER	100.00
			TOTAL:	100.00

VENDOR SORT KEY	DESCRIPTION	FUND	DEPARTMENT	AMOUNT
			TOTAL:	123.60
D.R. HORTON, INC.	SEWER UPSIZING PER AMEA	SEWER FUND	NON-DEPARTMENTAL	7,500.00
			TOTAL:	7,500.00
WV DEPT OF HEALTH & HUMAN SERVICES	FLOURIDE TEST	WATER FUND	WATER	15.00
	BACTERIOLOGICAL TEST	WATER FUND	WATER	140.00
	BACTERIOLOGICAL TEST	WATER FUND	WATER	20.00
			TOTAL:	175.00
FREEMIRE & ASSOCIATES, INC.	PS DPLX ALT PNLSTN SEWER FUND		SEWER	1,070.00
			TOTAL:	1,070.00
GUTTMAN ENERGY	W/E 5/08/22	WATER FUND	WATER	701.02
	W/E 5/15/22	WATER FUND	WATER	1,477.85
	W/E 5/08/22	SEWER FUND	SEWER	1,077.12
	W/E 5/08/22	SEWER FUND	SEWER	58.23
	W/E 5/15/22	SEWER FUND	SEWER	1,018.59
			TOTAL:	4,332.81
HACH COMPANY	DPDTTLCHLRN, DPDFRCHLRN	WATER FUND	WATER	564.99
	NITRATE TNT835	SEWER FUND	SEWER	501.68
			TOTAL:	1,066.67
INWOOD QUARRY, INC.	C1 PICKUPS: 5/06/22	WATER FUND	WATER	686.26
			TOTAL:	686.26
JEFFERSON PUBLISHING COMPANY	5/4 & 5/11 ADS: WWTP BIDS	SEWER FUND	SEWER	141.98
			TOTAL:	141.98
JEFFERSON RENTALS	SKDGRPPL GRPPLRTRKBCKT	SEWER FUND	SEWER	487.55
			TOTAL:	487.55
JNO S SOLENBERGER & CO., INC	FMI31946 4"GALVTYPEBFEMX6"	SEWER FUND	SEWER	212.40
			TOTAL:	212.40
JOHN DEERE FINANCIAL	331 TRACK LOADER	WATER FUND	NON-DEPARTMENTAL	17,681.01
	331 TRACK LOADER	WATER FUND	WATER	628.88
			TOTAL:	18,309.89
KABLE EXCAVATING, LLC	EQPMNTHL: EXCVTRMVDFMWHS	WATER FUND	WATER	240.00
			TOTAL:	240.00
KM ELECTRICAL SOLUTIONS LLC	SVC FOR LIGHTING	SEWER FUND	SEWER	1,700.00
			TOTAL:	1,700.00
METLIFE, INC	JUNE PREMIUMS	WATER FUND	WATER	778.27
	JUNE PREMIUMS	SEWER FUND	SEWER	588.78
			TOTAL:	1,367.05
DONALD MICKEY	MAY MOWING SMMTPT & PLYGRN	WATER FUND	WATER	137.50
	MAY MOWING SMMTPT & PLYGRN	SEWER FUND	SEWER	137.50
			TOTAL:	275.00
MISS UTILITY OF WV, INC.	MESSAGE FEES: APR	WATER FUND	WATER	399.00
			TOTAL:	399.00

VENDOR SORT KEY	DESCRIPTION	FUND	DEPARTMENT		AMOUNT
ADT SECURITY SERVICES	WTP: SVC 6/1/22-5/31/23	WATER FUND	WATER		623.88
	WTP: SVC 6/1/22-5/31/23	WATER FUND	WATER		623.88
				TOTAL:	1,247.76
ALEXANDER ENTERPRISES LLC	MISC REPAIRS & PATCHES	WATER FUND	WATER		1,450.00
	MISC REPAIRS & PATCHES	WATER FUND	WATER		3,128.00
	MISC REPAIRS & PATCHES	SEWER FUND	SEWER		4,580.00
	MISC REPAIRS & PATCHES	SEWER FUND	SEWER		2,000.00
				TOTAL:	11,158.00
AMERIGAS	PICKUP CHRG: BRUCE DR	SEWER FUND	SEWER		149.99
	TANK RENTAL: BRUCE DR	SEWER FUND	SEWER		143.17
	PROPANE: PERRY DR	SEWER FUND	SEWER		2,051.66
	PROPANE: BRUCE DR	SEWER FUND	SEWER		640.40-
				TOTAL:	1,704.42
ANTIETAM ELECTRIAL CONTRACTORS, INC	CONDUIT AT WTP	WATER FUND	WATER		924.65
	CONDUIT & CONTROL PANEL WO	WATER FUND	WATER		685.43
				TOTAL:	1,610.08
APPLE VALLEY TIRE	LAWN MOWER TRAILER FLAT RE	WATER FUND	WATER		28.25
				TOTAL:	28.25
ASSURED PARTNERS	MAR RISK MNGMNT SVCS	WATER FUND	WATER		400.00
	MAR COURSE, MILEAGE/LODGIN	WATER FUND	WATER		323.13
	MAR RISK MNGMNT SVCS	SEWER FUND	SEWER		400.00
	MAR COURSE, MILEAGE/LODGIN	SEWER FUND	SEWER		323.12
				TOTAL:	1,446.25
BIEDLER'S ELECTRIC MOTOR REPAIR, INC.	TUSC: C3208 1 HP 143TC	SEWER FUND	SEWER		983.50
				TOTAL:	983.50
CEDARCHEM, LLC	2,000G CEDARCLEAR 1757	WATER FUND	WATER		10,274.20
				TOTAL:	10,274.20
CHARLES TOWN SEWER	APRIL FUNDING	SEWER FUND	NON-DEPARTMENTAL		12,322.60
				TOTAL:	12,322.60
CHARLES TOWN UTILITY BOARD	APRIL FUNDING	WATER FUND	NON-DEPARTMENTAL		16,131.67
				TOTAL:	16,131.67
CHARLES TOWN WATER	APRIL FUNDING	WATER FUND	NON-DEPARTMENTAL		8,623.32
				TOTAL:	8,623.32
CITIBANK, N.A.	PRONOUNCEMENT	WATER FUND	NON-DEPARTMENTAL		757.05
				TOTAL:	757.05
CITY ELECTRIC SUPPLY CO	RDCNGWSHR,DLFSE,BLBS,ALMST	SEWER FUND	SEWER		1,649.24
				TOTAL:	1,649.24
CORE & MAIN	FITTINGS FOR GODWIN PUMP	SEWER FUND	SEWER		680.56
	4X6SDR35ECCINCREASERGXG,CB	SEWER FUND	SEWER		3,282.44
				TOTAL:	3,963.00
CRYSTAL SPRINGS	MONTHLY SVC @ 661 & WWTP	WATER FUND	WATER		61.80
	MONTHLY SVC @ 661 & WWTP	SEWER FUND	SEWER		61.80