CHARLES TOWN UTILITY BOARD
AGENDA

WEDNESDAY, AUGUST 27, 2025

Regular Meeting | **661 South George Street, Charles Town, WV 25414** | **4:00 PM**

CALL TO ORDER

1. **APPROVAL OF MINUTES**
   a. Approval of August 13, 2025 Special Meeting Minutes
   UB Minutes 08.13.25.pdf

2. **PUBLIC COMMENT**
   This portion of the agenda is designed for members of the general public to share thoughts on items of interest in the community. By law, Board members may ask clarifying questions or discuss procedural matters but are not permitted to discuss the policy merits of any issue unless it is scheduled for discussion.

   The public is invited to attend this meeting in person or via webcast (www.ctubwv.com- Board Meeting - Meeting Agendas and Minutes 2025) or by accessing the following zoom link:

   https://us06web.zoom.us/j/83828011140?pwd=4vpaI3KzXlLwDmSGPOEYaqOXhv3mpQ.1

   Meeting ID: 838 2801 1140
   Passcode: 125359
   (301)715-8592

3. **UNFINISHED BUSINESS**
   a. Update on WV PSC Cases - Possible Executive Session under the provision of W. VA Code 6-9a-4(b)(12) - To discuss any matter which, by express provision of federal law or state statute or rule of court is rendered confidential, or which is not considered a public record within the meaning of the freedom of information act as set forth in article one, chapter twenty-nine-b of the code.
   i. 25-0263-W-C – West Virginia American Water Complaint Case
   ii. 25-0079-W-PC - Sidewinder Service Agreement for Mountain Pure Development
   1. Ground Lease Agreement
   Final Ground Lease Agreement.pdf
   2. Side Letter
   Final Side Letter.pdf

3. WVDOH Permit Extension
   Final Sidewinder WVDOH Appr Permit.pdf
b. WV-002 Charles Town Road Tank – Possible Executive Session under the provision of W. VA Code 6-9a-4(b)(7) - To plan or consider an official investigation or matter relating to crime prevention or law enforcement.

4. **NEW BUSINESS**
   a. Chlorine Room Project - Resolution No. 1 - Pay Application No. 1
      Resolution No. 1 - Pay App No. 1.pdf
   b. Collection System Project - Resolution No. 14 - CIF Payment No. 9
      Resolution No. 14 - CIF No. 9.pdf
   c. Collection System Project - Resolution No. 15 - CWSRF No. 6, Pay Application No. 5
      Resolution No. 15 - CWSRF No. 6, Pay App 5.pdf
   d. Madison Greens AMEA
      Madison Greens Sewer AMEA - Draft.pdf
   e. Media Farms AMEA
      Media Farms Sewer AMEA - Draft.pdf
   f. Huntfield Water Storage Tank Leak Repair
      Huntfield Recondition Proposal.pdf
   g. CIF Workshop Overview
      Summary.pdf
      Plant plans.pdf
      WTP Upgrade Cost Summary.pdf
      End of Useful Life versus Growth Cost for WTP Upgrades.pdf
   h. CIP and CIF Review
      FY26 - CIF Study CIP Plan 08.22.25 Rev1.pdf
      FY26 - CIF Study CIP Plan 08.22.25 Rev2.pdf
      CTUB 2025 CIF Slides.pdf

5. **MANAGER REPORTS**
   a. Utility Manager Report
   b. Chairman Report

6. **APPROVAL OF BILLS**
   a. August 13, 2025
      Board Report 08.27.25.pdf

7. **ADJOURNMENT**

8. **INFORMATION ONLY**
   a. Next Meeting - September 10, 2025 at 4:00 P.M.

CHARLES TOWN UTILITY BOARD

Wednesday, August 27, 2025

Regular Meeting **661 South George Street**
Charles Town, WV 25414

Approval of August 13, 2025 Special Meeting Minutes

Attachments:

UB Minutes 08.13.25.pdf

Charles Town Utility Board
Special Board Meeting
August 13, 2025

The Charles Town Utility Board held a regular meeting on August 13, 2025 at 3:00 P.M. Members of the Board present were Micheal George, Chairman; John Maxey, Vice Chairman; Duke Pierson, Treasurer; Heidi Parker, and Board Member; Patrick Kratovil, Board Member. Also present were Kristen Stolipher, Utility Manager; April Shultz, Assistant Utility Manager; Ashley Stottlemyer, Secretary; and Robert Rodecker, Legal Counsel (Zoom).

CALL TO ORDER

The Chairman called the meeting to order at 3:00 P.M.

APPROVAL OF MINUTES

Approval of July 23, 2025 Regular Meeting Minutes

The Chairman called for changes or corrections to the July 23, 2025 regular meeting minutes. Mrs. Parker suggested three minor corrections.

Action: **Motion made by Mr. Maxey, second by Mr. Kratovil, the Board unanimously approved the July 23, 2025 regular meeting minutes as amended.**

PUBLIC COMMENT

Public comment was received by Jacquelyn Milliron.

UNFINISHED BUSINESS

Update on WV PSC Cases - Possible Executive Session under the provision of W. VA Code 6-9a-4(b)(12) - To discuss any matter which, by express provision of federal law or state statute or rule of court is rendered confidential, or which is not considered a public record within the meaning of the freedom of information act as set forth in article one, chapter twenty-nine-b of the code.

i. 25-0079-W-PC - Sidewinder Service Agreement for Mountain Pure Development

This item was moved to Executive Session.

ii. 25-0263-W-C – West Virginia American Water Complaint Case

Mr. Rodecker and Mrs. Stolipher mentioned the case is now in the briefing stage, with the first set of briefs due within the next week.

Action: **No action required by the Board.**

NEW BUSINESS

Renewal and Replacement Project – Change Order No. 9

Mrs. Stolipher provided the change order for the final two items of the project, including a booster pump repair credit and a QC Allowance totaling $34,139.75.

Action: **Motion made by Mr. Pierson, second by Mr. Maxey, the Board unanimously approved Change Order No. 9.**

Renewal and Replacement Project – Pay Application No. 31

Mrs. Stolipher included the final pay application, Pay Application No. 31, in the amount of $221,904.47 for work completed. She mentioned this pay application closes out the project with an estimated $251,000.00 remaining in the budget.

Action: Motion made by Mrs. Parker, second by Mr. Kratovil, the Board unanimously approved Pay Application No. 31.

2022 Collection System Project – GDF Construction Administration and RPR Amendment

Mrs. Stolipher provided the amendment to the original GDF contract due to additional engineering time and costs relating to the design/re-design, permitting, surveying and easements. Mr. Eckenrode provided that GDF is requesting an increase to the construction administration and on-site project representative cost of $120,000. Mrs. Stolipher mentioned she will brief the Board on several project issues at a later meeting. The Board provided discussions.

Action: Motion made by Mrs. Parker, second by Mr. Pierson, the Board unanimously approved the GDF Construction Administration and RPR Amendment totaling $120,000.

WV-002 Route 9 Tank – Fourth Amendment to Lease Agreement – New Cingular Wireless

This item was moved to Executive Session.

Cooley Communications Update

Emily Bryan from Cooley updated the Board on what they have been working on over the past several months, including the launch of a Facebook page, a rate estimator on the website and supporting staff with various tasks. She also briefed the Board on goals and tactics for the remainder of 2025. Mrs. Bryan suggested a work session with the Board to develop a strategic plan and shared vision around communications. Cooley proposed a monthly fee of $7,000 for the continued support to staff and execute the Board's visions. The Board provided discussions.

Action: Motion made by Mr. Maxey, second by Mr. Pierson, the Board unanimously approved the $7,000 monthly fee through May 2026, dating the year contract back to May 2025 and to schedule a strategic workshop with the Board.

MANAGER REPORTS

Utility Manager Report

Mrs. Stolipher gave a brief update including a backflow survey sent to roughly 300 customers, the Geotechnical report for the proposed maintenance building, a meter trade-in program and Summit Point Raceway grant funding. The Board provided discussions.

Action: No action required by the Board.

Chairman Report

The Chairman provided that he received positive comments from Edmunds about CTUB staff and the City is in negotiations with a new City Manager.

Action: No action required by the Board.

APPROVAL OF BILLS

August 13, 2025

Action: **Motion made by Mrs. Parker, second by Mr. Maxey, the Board unanimously approved the payment of the bills.**

EXECUTIVE SESSION

Action: **Motion by Mr. Pierson, second by Mrs. Parker, the Board unanimously approved convening into Executive Session at 3:40 P.M. to discuss PSC case 25-0079-W-PC - Sidewinder Service Agreement for Mountain Pure Development and Route 9 Tank – Fourth Amendment to Lease Agreement.**

The Board convened back into public session at 4:17 P.M. The Chairman clarified the Board went into executive session for discussion on the Sidewinder Agreement under WV Code 6-9a-4(b)(9) - To consider matters involving or affecting the purchase, sale or lease of property and discussed the Amendment to the Lease Agreement with New Cingular Wireless under WV Code 6-9a-4(b)(7) - To plan or consider an official investigation or matter relating to crime prevention or law enforcement.

Update on WV PSC Cases - Possible Executive Session under the provision of W. VA Code 6-9a-4(b)(12) - To discuss any matter which, by express provision of federal law or state statute or rule of court is rendered confidential, or which is not considered a public record within the meaning of the freedom of information act as set forth in article one, chapter twenty-nine-b of the code.

i. 25-0079-W-PC - Sidewinder Service Agreement for Mountain Pure Development

Action: **Motion by Mr. Maxey, second by Mrs. Parker, the Board unanimously approved tabling the Ground Lease Agreement, Side Letter and WVDOH permit renewal until the next Board meeting to allow the documents to be made publicly available.**

WV-002 Route 9 Tank – Fourth Amendment to Lease Agreement – New Cingular Wireless

Action: **Motion made by Mr. Maxey, second by Mr. Pierson, the Board unanimously approved the Fourth Amendment Lease Agreement with New Cingular Wireless.**

ADJOURNMENT

There being no further business at this time, the Board adjourned the meeting at 4:20 P.M.

INFORMATION ONLY

The next meeting is scheduled for Wednesday, August 27, 2025 at 4:00 P.M. at 661 S. George Street.

_____ _____

Micheal George
Chairman

Ashley Stottlemyer
Secretary

CHARLES TOWN UTILITY BOARD

Wednesday, August 27, 2025

Regular Meeting

661 South George Street
Charles Town, WV 25414

Update on WV PSC Cases - Possible Executive Session under the provision of W. VA Code 6-9a-4(b)(12) - To discuss any matter which, by express provision of federal law or state statute or rule of court is rendered confidential, or which is not considered a public record within the meaning of the freedom of information act as set forth in article one, chapter twenty-nine-b of the code.

CHARLES TOWN UTILITY BOARD

Wednesday, August 27, 2025

Regular Meeting

661 South George Street
Charles Town, WV 25414

25-0263-W-C – West Virginia American Water Complaint Case

CHARLES TOWN UTILITY BOARD

Wednesday, August 27, 2025

Regular Meeting

661 South George Street
Charles Town, WV 25414

25-0079-W-PC - Sidewinder Service Agreement for Mountain Pure Development

CHARLES TOWN UTILITY BOARD

Wednesday, August 27, 2025

Regular Meeting **661 South George Street**
Charles Town, WV 25414

Ground Lease Agreement

Attachments:

Final Ground Lease Agreement.pdf

GROUND LEASE AGREEMENT

This GROUND LEASE AGREEMENT (this "**Ground Lease**") is made and entered into as of the _____ day of _____, 2025 (the "**Effective Date**") by and between SIDEWINDER ENTERPRISES, LLC, a Delaware limited liability company with principal offices at 4340 Von Karmen Avenue, Suite 380, Newport Beach, California 92660 (hereinafter, "**Sidewinder**"), as lessor, and the CITY OF CHARLES TOWN, a West Virginia municipal corporation, by and through the CHARLES TOWN UTILITY BOARD, a municipal utility board with principal offices at 661 South George Street, Suite 101, Charles Town, West Virginia, 25414 (hereinafter, "**CTUB**"), as lessee. Sidewinder and CTUB are sometimes referred to herein collectively as the "**Parties**" and individually as a "**Party**."

RECITALS

A. CTUB operates a combined water and sewer system pursuant to the provisions of Chapter 8, Article 20 of the Code of West Virginia and has been authorized by the Public Service Commission of West Virginia to develop a water supply system throughout areas within Jefferson County, West Virginia, including certain areas near the Village of Middleway in Middleway District of Jefferson County.

B. Sidewinder owns a certain parcel of real property situate in Middleway District of Jefferson County, West Virginia, containing 259.54 acres, more or less, being "Parcel I" conveyed to Sidewinder by and described with particularity in that certain Special Warranty Deed dated 25 February, 2021, and of record in the Office of the Clerk of the County Commission of Jefferson County, West Virginia, in Deed Book 1256, at page 360, which parcel is shown on that certain ALTA/ACSM Survey dated 4/5/04 prepared by Patton Harris Rust & Associates, pc, and of record in the aforesaid Clerk's Office in Plat Book 21, at page 14 (a copy of which survey is attached hereto as Exhibit "A"), and designated for property tax purposes as Map 22, Parcel 9, and upon which Sidewinder intends to conduct industrial/commercial activities utilizing spring water as a raw material (the "**Sidewinder Parcel**").

C. Sidewinder holds certain easements necessary for installation, operation, and maintenance of a raw water transmission line as contemplated in the Agreement, as such term is defined below.

D. In conjunction and contemporaneously with entry into this Ground Lease,

Sidewinder and CTUB will enter into a certain agreement (the "**Agreement**") pursuant to which, among other things: (i) Sidewinder will engage, or has engaged, professional engineers to design, subject to CTUB's approval, certain components of a water system as specified in the Agreement; (ii) Sidewinder will construct such water system, including the Project as specified in the Agreement; (iii) following completion of the Project, Sidewinder will transfer ownership of the Project together with certain waterline easements to CTUB; (iv) Sidewinder will lease to CTUB the Leased Premises; (v) Sidewinder will perform and comply with certain obligations specified in Sections 4.01 and 7.01 of the Agreement; and (vi) CTUB will perform and comply with certain obligations specified in Section 7.01 of the Agreement.

E. Sidewinder and CTUB each desire to enter this Ground Lease as the lease contemplated under Section 3.04 of the Agreement.

AGREEMENT

NOW THEREFORE, in consideration of the foregoing Recitals, which are intended to and shall constitute binding provisions of this Ground Lease, and the mutual conditions, covenants, and promises contained herein, the Parties hereto, intending to be legally bound, do hereby agree as follows:

ARTICLE I -- LEASE OF PREMISES

1.1 Lease of Leased Premises. Sidewinder shall, and hereby does, lease to CTUB and CTUB shall, and hereby does, lease and rent from Sidewinder for the entire Term (as such term is defined below), that certain parcel of real estate containing 1.6 acres, more or less, designated "Proposed Parcel 3 (Approx. 1.6 AC) Future Water Treatment Facility" as shown on that certain plat attached hereto as Exhibit "B" (the "**Leased Premises**") and the approximate location of which is indicated on Exhibit "A" in red and with red hatching, which Leased Premises are a portion of the Sidewinder Parcel.

1.2 Easements & Rights-of-Way. Sidewinder shall, and hereby does, grant to CTUB, for the Term, irrevocable easements and rights-of-way over, upon, across, and under other appropriate and necessary portions of the Sidewinder Parcel for the purposes of: (i) ingress to and egress from the Leased Premises by CTUB, its personnel, staff, agents, contractors, suppliers, vendors, and other invitees. Sidewinder may, in its discretion, elect that such ingress and egress be by a separate road outside of Sidewinder's gated or otherwise secured areas; (ii) the installation,

maintenance, repair, replacement, and operation of all utilities reasonably necessary or convenient for operation of the Project; (iii) the maintenance, repair, replacement, and operation of the Project; (iv) the installation, maintenance, repair, replacement, and operation of other water mains or other lines and related components running from the Project for purposes of CTUB providing water service to members of the public; and (v) reasonable signage designating CTUB's operations. Such easements and rights-of-way shall be definitively located by the Parties when the boundaries of the Leased Premises are located. Sidewinder shall, upon request of CTUB, grant to any utility or provider of utility services the same easements and rights-of-way granted above for purposes of item (ii).

1.3 Substitution of Leased Premises. In the event that Sidewinder is prohibited by governmental authorities from leasing to CTUB and allowing use of the Leased Premises for the purposes described herein, Sidewinder shall designate another portion of the Sidewinder Parcel acceptable to CTUB to be substituted as the Leased Premises hereunder and said substitute Leased Premises shall be surveyed by a licensed land surveyor and designated by a metes and bounds description and/or a plat thereof, and substituted by appropriate amendment to this Ground Lease.

ARTICLE II -- TERM OF LEASE

2.1 Term of the Ground Lease. The term of this Ground Lease and the lease hereunder shall commence at 12:00 a.m. (midnight) on the Term Commencement Date and continue thereafter for a period of one hundred (100) years, expiring at 11:59 p.m. on the day immediately preceding the one-hundredth (100th) anniversary of the Term Commencement Date, unless earlier terminated by mutual agreement of the Parties or as otherwise provided herein (the "**Term**"). The "**Term Commencement Date**" shall be the date of transfer of the Project to CTUB pursuant to the Agreement. Promptly following the Term Commencement Date, the Parties shall execute and exchange counterparts of a Memorandum of Term Commencement Date in the form of that attached hereto as Exhibit "C", duly completed with the actual Term Commencement Date, and attach the same to their respective counterparts of this Ground Lease.

2.2 Contingencies. The Parties acknowledge and understand that Sidewinder's rights and ability to construct the Project are subject to certain regulatory and/or governmental approvals and permits. In the event Sidewinder is unable to secure all required approvals and permits with commercially reasonable efforts, Sidewinder may elect to unilaterally cancel and terminate this Ground Lease.

ARTICLE III -- RENT

CTUB shall pay to Sidewinder, as fixed rent for the Leased Premises, an annual rental payment in the sum of One Dollar ($1.00), with the first of such rental payments due and payable on the Term Commencement Date and the subsequent rental payments due on the next following ninety-nine (99) anniversaries of the Term Commencement Date; *provided that*, CTUB may, in its discretion, elect to pay the fixed rent for the entire Term on the Term Commencement Date, in which case the same shall be indicated on the executed Memorandum of Term Commencement Date.

ARTICLE IV -- USE OF PREMISES

4.1 Permitted Use. The Leased Premises shall be occupied by CTUB and used solely for the purpose of operation, maintenance, repair, and replacement of the Project for purposes of treatment of raw spring water to produce finished water for distribution by CTUB as contemplated in the Agreement. CTUB shall operate and use the Project upon the Leased Premises in a professional, workmanlike, reasonable, careful, safe, and proper manner.

4.2 Compliance with Applicable Law. CTUB shall comply with all applicable federal, state, county, and local statutes, codes, laws, regulations, ordinances, orders, writs, decrees, and other rules, whether now existing or hereafter enacted, adopted, promulgated, issued or enforced ("**Applicable Law**"), in connection with this Ground Lease and its occupancy and use of the Leased Premises.

4.3 Hazardous Materials. CTUB shall not cause or permit the escape, disposal, or release in or about or from the Leased Premises or Sidewinder Parcel of any Hazardous Materials. CTUB shall not allow the storage or use of Hazardous Materials in any manner not permitted by law and the highest standard prevailing in the industry for the storage and use of such Hazardous Materials, and then only after written notice is given to Sidewinder of the identity of such materials. Without limitation, the term "**Hazardous Materials**" shall include asbestos, biologically or chemically active substances that present a hazard to health or the environment, radioactive materials, and hazardous substances, hazardous wastes, hazardous materials, and toxic substances defined in the Comprehensive Environmental Response, Compensation and Liability Act of 1980, as amended, 42 U.S.C. Section 9601 et seq., the Resource Conservation and Recovery Act, as amended, 42 U.S.C. Section 6901 et seq., the Hazardous Materials Transportation Act, as amended, 49 U.S.C. Section 1801 et seq., the Toxic Substances Control Act, as amended, 15

U.S.C. Section 2601 et seq., and in the regulations promulgated pursuant thereto, or in any other applicable federal, state or local law or regulation. CTUB shall, to the extent permitted by law, indemnify Sidewinder in the manner provided in Article VIII from any release of Hazardous Materials in or upon the Leased Premises or the Sidewinder Parcel during the Term and elsewhere if caused by CTUB or persons acting under CTUB. The terms and conditions of this Section 4.3 shall survive the termination or expiration of this Ground Lease and shall remain in full force and effect thereafter.

4.4 Land Use Covenants. CTUB acknowledges and understands that the Sidewinder Parcel, or portions thereof, are subject to certain Land Use Covenants recorded in the Office of the Clerk of the County Commission of Jefferson County, West Virginia, in Book 1201, at page 146, and in Book 1208, at page 542, which Land Use Covenants, among other things, contain environmental covenants restricting activities upon the Sidewinder Parcel. CTUB shall fully abide by all applicable provisions of the Land Use Covenants and comply with all orders or directions of any regulatory agency with jurisdiction with regard to the same and related matters. CTUB shall not violate any provision of any of the Land Use Covenants or undertake or conduct any activity upon the Leased Premises or any other portion of the Sidewinder Parcel that would or could violate any such provision. Except with the express prior written permission of Sidewinder in each instance, CTUB shall not: (i) undertake, conduct, cause, or allow any disturbance, displacement, drilling, or other penetration of the soil or other surface material of the Leased Premises or any other portion of the Sidewinder Parcel; or (ii) undertake, conduct, cause or allow any construction, building, excavation, grading, paving, or similar activities on the Leased Premises or any other portion of the Sidewinder Parcel.

ARTICLE V -- MAINTENANCE/IMPROVEMENTS

5.1 Maintenance. At CTUB's own expense, CTUB shall: (i) use, maintain, and occupy the Leased Premises in a careful, safe, and proper manner; (ii) keep the Leased Premises and improvements thereon, including roadways, parking areas, and sidewalks, in a clean, safe, and healthy condition and clear snow, ice, dirt, and rubbish from the same during the Term; and (iii) repair and maintain in sightly appearance, good order, condition, and repair, including by replacement if necessary, the Leased Premises and the Project and other personal property of CTUB upon the Leased Premises, all in compliance with and as may be required by, applicable building, safety, and fire codes, including legally required fire extinguishers and safety or health

improvements.

5.2 Improvements. CTUB may expand the capacity of the Treatment Plant as provided in Section 7.02 of the Agreement, which capacity expansion improvements made upon the Leased Premises by CTUB shall be and remain the property of CTUB, but CTUB shall make no other improvements upon the Leased Premises except: (i) as required by applicable governmental authority; (ii) as reasonably necessary and appropriate for health and safety reasons; or (iii) as consented to in writing by Sidewinder.

5.3 No Liens. CTUB shall be responsible for the prompt payment of all charges incurred by CTUB with respect to repairs, improvements, or replacement to or of the Leased Premises and the Project and other personal property of CTUB upon the Leased Premises after the Term Commencement Date and ending upon the expiration of this Ground Lease. Sidewinder shall be responsible for the prompt payment of all charges incurred with respect to improvements to or of the Leased Premises and construction of the Project prior to the Term Commencement Date and with respect to repairs or replacements covered by and under warranty provided by Sidewinder to CTUB pursuant to Section 5.02 of the Agreement. CTUB shall promptly satisfy and discharge any and all mechanics', materialmen's, suppliers', or other liens filed against the Leased Premises by reason of any repairs, improvements, or replacement commissioned by CTUB. Sidewinder shall promptly satisfy and discharge any and all mechanics', materialmen's, suppliers', or other liens filed against the Leased Premises by reason of any warranty repairs, improvements, or replacement commissioned by Sidewinder. CTUB shall indemnify Sidewinder, to the extent permitted by law, in the manner provided in Article VIII from any and all costs or expenses resulting from any such lien being placed upon the Leased Premises for work commissioned by CTUB. Sidewinder shall indemnify CTUB from any and all costs or expenses resulting from any such lien being placed upon the Leased Premises by virtue of any unpaid warranty work. The terms and conditions of this Section 5.3 shall survive the termination or expiration of this Ground Lease and shall remain in full force and effect thereafter.

ARTICLE VI -- DAMAGE OR DESTRUCTION

After the Term Commencement Date, in the event of damage to or destruction of the Project or any other improvements constructed or placed upon the Leased Premises by CTUB and necessary to continued operation of the Project, whether due to fire, explosion, weather, other casualty, or any other cause whatsoever, CTUB shall, at its expense, promptly repair, restore, or

rebuild the same. After the Term Commencement Date, Sidewinder shall not be liable for any damage to or destruction of the Project or other improvements or property of CTUB or third parties located upon the Leased Premises. If CTUB fails to promptly commence and diligently pursue such repair, restoration, or rebuilding within thirty (30) days of occurrence of the damage or destruction, and where said damage or destruction occurred after the Term Commencement Date, Sidewinder may elect to perform such repair, restoration, or rebuilding as it deems appropriate, in its sole discretion, at CTUB's cost and expense, and CTUB shall promptly pay to Sidewinder all costs and expenses of the same incurred by Sidewinder, as additional rent hereunder.

ARTICLE VII -- TAXES & ASSESSMENTS

7.1 CTUB's Responsibilities. CTUB shall: (i) advise the Assessor of Jefferson County, West Virginia, that CTUB is leasing the Leased Premises for a term of one hundred (100) years and request that the Leased Premises accordingly be exempted from real property taxes; and (ii) advise the Assessor of Jefferson County, West Virginia, that the Project and related and necessary facilities are owned by CTUB and accordingly exempt from real property and personal property taxes. In the event that, notwithstanding such advice: (i) CTUB is billed for property taxes assessed upon the Project or related facilities owned by CTUB, CTUB shall promptly readdress the matter with the Assessor of Jefferson County and, if such efforts do not result in exemption from property taxes, CTUB shall commence and prosecute to conclusion appropriate administrative and/or judicial proceedings seeking to have the Project and related facilities owned by CTUB determined exempt from property taxes; or (ii) Sidewinder is billed for property taxes assessed upon the Project or related facilities owned by CTUB, CTUB shall promptly address the matter with the Assessor of Jefferson County and, if such efforts do not result in the Assessor deleting such items as property assessed to Sidewinder, Sidewinder shall commence and prosecute to conclusion appropriate administrative and/or judicial proceedings seeking to have the Project and related facilities owned by CTUB deleted as property assessed to Sidewinder and CTUB shall reasonably cooperate with Sidewinder in such efforts. In the event of a determination of tax-exempt status or determination that items be deleted as property assessed to Sidewinder and resulting order of refund of any property taxes assessed and actually paid, amounts refunded shall be remitted to the Party that paid such taxes.

7.2 Sidewinder's Responsibilities. Sidewinder shall pay all real property taxes and assessments, general and special, ordinary and extraordinary, of every kind and nature whatsoever,

which may be levied, assessed, or imposed upon the land component of the Leased Premises.

ARTICLE VIII -- INDEMNIFICATION

8.1 Indemnification.

a. Following the Term Commencement Date, to the extent permitted by law, except to the extent of any Claims caused by or resulting from the negligence, gross negligence, or willful misconduct of Sidewinder, or any of its representatives, agents, employees, contractors, or invitees, CTUB shall indemnify, defend, and hold harmless Sidewinder and its members, managers, officers, owners, employees, consultants, agents, and representatives (each, a "**Sidewinder Indemnified Party**") from any and all Claims incurred as a result of: (i) any occurrence in, upon, or about the Leased Premises; (ii) the occupancy or use of the Leased Premises or any part thereof by CTUB or its employees, agents, representatives, contractors, customers, or other invitees; (iii) any act or omission of CTUB or its employees, representatives, contractors, or other agents in, upon, or about the Leased Premises, or in connection with the Leased Premises or this Ground Lease; (iv) any breach or violation by CTUB of any of the terms, covenants, or conditions of this Ground Lease; or (v) bodily injury to or death of any individual, or damage to or destruction of property of Sidewinder or a third party, to the extent resulting from the negligence, gross negligence, or willful misconduct of CTUB or its employees, representatives, contractors, other agents, or other invitees. For purposes of this Article VIII, the term "**Claims**" means claims, demands, law suits, causes of action, obligations, liabilities, damages, losses, costs, and expenses (including reasonable expenses of litigation, including court costs and attorneys fees).

b. Following the Term Commencement Date, to the extent permitted by law, except to the extent of any Claims caused by or resulting from the negligence, gross negligence, or willful misconduct of CTUB, or any of its representatives, agents, employees, contractors, or invitees, Sidewinder shall indemnify, defend, and hold harmless CTUB and its members, managers, officers, owners, employees, consultants, agents, and representatives (each, a "**CTUB Indemnified Party**") from any and all Claims incurred as a result of: (i) any act or omission of Sidewinder or its employees, representatives, contractors, or other agents in, upon, or about the Leased Premises, or in connection with the Leased Premises or this Ground Lease; (ii) any breach or violation by Sidewinder of

any of the terms, covenants, or conditions of this Ground Lease; or (iii) bodily injury to or death of any individual, or damage to or destruction of property of CTUB or a third party, to the extent resulting from the negligence, gross negligence, or willful misconduct of Sidewinder or its employees, representatives, contractors, other agents, or other invitees.

8.2 Third-Party Claims. Within twenty (20) days of receipt of notice of any Claim asserted by a third party for which indemnification may be sought by Sidewinder under Section 8.1.a. or by CTUB under Section 8.1.b., the indemnified party (whether a Sidewinder Indemnified Party or a CTUB Indemnified Party, as the case may be), shall give the indemnifying party written notice of the Claim with details, to the extent known, of the factual basis of the Claim and amounts claimed; *provided that*, a delay in giving such notice shall relieve the indemnifying party of liability for the Claim only to the extent the indemnifying party suffers actual prejudice because of such delay. The indemnified party shall have the right, at its option and expense, to participate in the defense of such a Claim, but not to control the defense, negotiation, or settlement thereof, which control shall at all times rest with the indemnifying party; *provided that*, the indemnifying party will not settle any such suit or claim without the indemnified party's prior written consent, which consent shall not be unreasonably withheld, if such settlement would be adverse to the indemnified party's interests, including inclusion of a financial obligation on, or admission of liability by, the indemnified party.

8.3 Survival. The terms and conditions of this Article VIII shall survive the expiration or termination of this Ground Lease for any reason whatsoever and shall remain in full force and effect thereafter for a period of two (2) years following the termination of this Ground Lease.

ARTICLE IX -- INSURANCE

9.1 Required Insurance. CTUB shall, at all times during the Term, maintain in full force and effect the following insurance coverage with respect to the Leased Premises and the activities and operations of CTUB upon the Leased Premises, on an occurrence basis:

a. General Liability Insurance in which the limits of liability for injuries, including accidental death, shall be at least $3,000,000 for any one occurrence, and the limits of liability for property damage shall be at least $2,000,000 for any one occurrence, and which insurance shall include Contractual Liability coverage covering the indemnification obligations assumed by CTUB herein;

b. Automobile Liability Insurance in which the limits of liability for injuries,

including accidental death, and for property damage shall each be at least $2,000,000 for any one occurrence;

c. Fire and extended coverage insurance, covering "special" or "all risk" perils, for full replacement cost with limit of liability of no less than $35,000,000, on the Project, CTUB's other machinery, equipment, furniture & fixtures, goods, and improvements upon the Leased Premises, and property of others for which CTUB is responsible; and

d. Workers' Compensation and Employer's Liability Insurance in an amount sufficient by virtue of Applicable Law.

9.2 Policy Requirements. All insurance coverage required under Section 9.1 shall be issued by companies authorized to do business under the laws of the State of West Virginia, be in form satisfactory to Sidewinder, name Sidewinder as an additional insured, and contain a provision prohibiting cancellation except upon at least ten (10) days' prior notice to Sidewinder. All such insurance policies or other coverage will be primary in the event of a loss arising in connection with this Ground Lease. Certified copies of said policies or certificates evidencing such insurance and naming Sidewinder as an additional insured shall be filed with Sidewinder prior to the Term Commencement Date and within a reasonable time after any renewals or changes to such policies are issued. To the extent permitted by law, CTUB and its insurer(s) agree that subrogation rights against Sidewinder are hereby waived. CTUB hereby undertakes to reflect such waiver in any policy(ies) required hereunder.

ARTICLE X -- UTILITIES

CTUB shall be solely responsible for and shall promptly pay all charges for heat, water, gas, electricity, sewage, or any other utility used or consumed by CTUB on the Leased Premises or otherwise with respect to the Project.

ARTICLE XI -- EMINENT DOMAIN

11.1 Actions & Award. In the event the Leased Premises or any portion thereof shall be taken by or pursuant to any governmental authority or through the exercise of the right of eminent domain, CTUB and Sidewinder shall join and cooperate in resisting such proceeding if such resistance is feasible and desirable and, if it is not, shall join and cooperate in prosecuting their respective claims for damages incurred from the successful exercise of such right or proceeding.

Any condemnation award shall be paid in the following order of priority: (i) to CTUB for the then value of its improvements and its leasehold interest; and (ii) the balance to Sidewinder.

11.2 Taking. If the whole of the Leased Premises, or such portion thereof as to render infeasible CTUB's continued use and occupancy of the remaining Leased Premises for the purposes of this Ground Lease, shall be taken, Sidewinder shall, if reasonable and feasible, designate another portion of the Sidewinder Parcel to be substituted as the Leased Premises hereunder or the taken portion thereof and CTUB shall thereafter, in its sole discretion, move to such substitute Leased Premises the Treatment Plant, or reconstruct thereon a comparable Treatment Plant, and this Ground Lease shall remain in force and effect with respect to such substitute Leased Premises.

ARTICLE XII -- CTUB'S RIGHT OF FIRST REFUSAL

If, during the Term, Sidewinder receives a bona fide offer from a third party to purchase the Leased Premises, or any larger tract or parcel of land of which the Leased Premises is a part, which offer Sidewinder shall desire to accept, Sidewinder shall immediately notify CTUB, in writing, giving all of the terms and conditions of such offer, and CTUB shall have the right and option, for thirty (30) days after receipt of such notice, to elect to purchase the Leased Premises or said larger tract or parcel of land for the same consideration, on the same terms and conditions set forth in such offer. Said option shall be exercisable by CTUB giving written notice to Sidewinder within such thirty (30) day period. If said option is not exercised by CTUB within such period, Sidewinder shall have the right to sell the Leased Premises to such third party on the terms and conditions contained in said notice provided to CTUB and subject to this Ground Lease.

ARTICLE XIII -- POSSESSION AND QUIET ENJOYMENT

Sidewinder represents and warrants to CTUB that Sidewinder has fee simple title to the Leased Premises, free and clear of any deed restrictions or other encumbrances which would in any way prevent Sidewinder from carrying out its obligations under this Ground Lease, or prevent the use and enjoyment of the Leased Premises by CTUB, as provided herein. Sidewinder will place CTUB in possession of the Leased Premises on the Term Commencement Date and CTUB may thereafter peaceably and quietly enjoy the Leased Premises for the Term, free from the claims of persons in possession and third parties claiming rights thereto, subject however to the terms and conditions of this Ground Lease and CTUB's full compliance therewith. CTUB shall not abandon

or vacate the Leased Premises during the Term.

ARTICLE XIV -- COVENANTS RUN WITH THE LAND

All of the covenants, agreements, conditions, and undertakings contained in this Ground Lease shall extend and inure to and be binding upon the respective successors and assigns of the Parties, the same as if they were in every case specifically named, and shall be construed as covenants running with the land, and wherever in this Ground Lease reference is made to either of the Parties, it shall be held to include and apply to, wherever applicable, the successors and assigns of such Party.

ARTICLE XV -- EVENTS OF DEFAULT; TERMINATION

15.1 CTUB Event of Default. Any of the following shall constitute the occurrence of an Event of Default by CTUB:

a. The failure or refusal of CTUB, for a period in excess of twenty-four (24) hours, to properly maintain and operate the raw water pipeline component of the Project with the result that raw spring water pumped into it by Sidewinder cannot freely flow through such pipeline, within its capacity limitations, to its intended destination;

b. The failure or refusal of CTUB, for a period in excess of fifteen (15) days, to properly maintain and operate any other component of the Project with the result that raw spring water is not able to be treated and processed within the Project as contemplated and intended by its design specifications to become finished water that freely flows, within the Project's capacity limitations, to Sidewinder's facilities;

c. The failure or refusal of CTUB to perform or observe any of its other material covenants, obligations, or duties under the provisions of this Ground Lease or the Agreement, if such failure or refusal continues uncured thirty (30) days after CTUB has received from Sidewinder written notice of the failure or refusal and the right to cure the same; *provided that*, if the nature of the subject failure or deficiency is such that it cannot reasonably be cured within thirty (30) days, it shall be deemed to have been cured if CTUB commences reasonable efforts to cure within the thirty (30) day period and thereafter diligently continues such efforts until the failure or deficiency is remedied;

d. If Sidewinder suffers irreparable harm as a result of falseness or inaccuracy of any material representation or warranty made by CTUB in this Ground Lease or the

Agreement; or

e. The commencement of any bankruptcy, insolvency, liquidation, or similar proceeding by or against CTUB; the consent by CTUB to the appointment of or taking possession by a receiver, liquidator, trustee in bankruptcy, or custodian of CTUB or any substantial part of its assets; or any assignment of all or substantially all of the assets of CTUB for the benefit of its creditors; *provided that*, in the case of the commencement of an involuntary petition or proceeding or entry of a judgment or judicial order that includes or seeks to cause any of the above events, such petition, proceeding, judgment, or order is not discharged or dismissed within thirty (30) days.

15.2 Remedies upon CTUB Event of Default.

a. Upon the occurrence of an Event of Default set forth in Section 15.1.a. or Section 15.1.b, Sidewinder may, in addition to the other remedies specified for such Event of Default in this Section 15.2 and to the extent permissible under Applicable Law, elect in its sole discretion to: (i) itself maintain and operate the raw water pipeline component of the Project in the case of a Section 15.1.a. Event of Default, or such of the other components of the Project as to which the default applies, or all of the same, in the case of a Section 15.1.b. Event of Default, on CTUB's behalf and at CTUB's expense; or (ii) assign such right to maintain and operate the subject facilities under the foregoing Section 15.2.a.(i) to a third party, including any PSC-regulated utility, determined by Sidewinder with PSC approval, if required. An election under the preceding sentence shall be for such time until Sidewinder with PSC approval, if required, determines that CTUB is ready, willing, and capable of maintaining and operating the subject facilities without further occurrence of an Event of Default; *provided that*, in the event a contractual provision reasonably necessary and appropriate for engagement of and assignment to a third party pursuant to the foregoing Section 15.2.a.(ii) shall dictate the third party's engagement for a longer period, the election of assignment to the third party shall remain in effect for such longer period.

b. Upon the occurrence of any Event of Default set forth in Section 15.1, in addition to any other remedy specified for such Event of Default in this Section 15.2, Sidewinder shall have all rights and remedies allowed by Applicable Law and in equity, including the right to recover damages, to secure specific performance, and to terminate this Ground Lease; *provided that*, this Ground Lease may be terminated for an Event of Default set forth in Section 15.1.a., 15.1.b., or 15.1.c. only if such Event of Default

continues uncured for a period of thirty (30) consecutive days following the initial occurrence of the Event of Default (beyond expiration of the specified cure period, if any).

15.3 Sidewinder Event of Default. Any of the following shall constitute the occurrence of an Event of Default by Sidewinder:

a. The failure or refusal of Sidewinder to perform or observe any of its material covenants, obligations, or duties under the provisions of this Ground Lease or the Agreement, if such failure or refusal continues uncured thirty (30) days after Sidewinder has received from CTUB written notice of the failure or refusal and the right to cure the same; *provided that*, if the nature of the subject failure or deficiency is such that it cannot reasonably be cured within thirty (30) days, it shall be deemed to have been cured if Sidewinder commences reasonable efforts to cure within the thirty (30) day period and thereafter diligently continues such efforts until the failure or deficiency is remedied;

b. If CTUB suffers irreparable harm as a result of the falseness or inaccuracy of any material representation or warranty made by Sidewinder in this Ground Lease or the Agreement; or

c. The commencement of any bankruptcy, insolvency, liquidation, or similar proceeding by or against Sidewinder; the consent by Sidewinder to the appointment of or taking possession by a receiver, liquidator, trustee in bankruptcy, or custodian of Sidewinder or any substantial part of its assets; or any assignment of all or substantially all of the assets of Sidewinder for the benefit of its creditors; *provided that*, in the case of the commencement of an involuntary petition or proceeding or entry of a judgment or judicial order that includes or seeks to cause any of the above events, such petition, proceeding, judgment, or order is not discharged or dismissed within thirty (30) days.

15.4 Remedies upon Sidewinder Event of Default. Upon the occurrence of any Event of Default set forth in Section 15.3, CTUB shall have all rights and remedies allowed by Applicable Law and in equity, including the right to recover damages, to secure specific performance, and to terminate this Ground Lease; *provided that*, this Ground Lease may be terminated for an Event of Default set forth in Section 15.3.a. only if such Event of Default continues uncured for a period of thirty (30) consecutive days following the initial occurrence of the Event of Default (beyond expiration of the specified cure period).

ARTICLE XVI -- CTUB'S PROPERTY

During the Term, except for the replacement of components of the Project with comparable items, CTUB shall leave in place and not remove from the Leased Premises the Project.

ARTICLE XVII -- SURRENDER OF PREMISES

17.1 Reversion to Sidewinder. Upon the expiration or termination of this Ground Lease: (i) CTUB shall, to the extent permitted by Applicable Law, vacate the Leased Premises and surrender the entirety of the same to Sidewinder; and (ii) the entirety of the Leased Premises shall revert to Sidewinder free and clear of this Ground Lease and the leasehold hereunder.

17.2 Voluntary Removal of CTUB Property. Upon expiration by passage of time of the full Term or upon CTUB's termination of this Ground Lease pursuant to Section 15.4 due to Sidewinder's default, CTUB shall have the right to voluntarily remove from the Leased Premises the Project. CTUB shall provide written notice to Sidewinder specifying the items to be so removed and the approximate timeframe for removal, and CTUB shall thereafter remove the designated items as expeditiously as practicable. The Term shall be deemed extended on a day-by-day basis during such removal efforts, and CTUB shall thereafter surrender the Leased Premises to Sidewinder.

17.3 CTUB Property to Remain in Place. Upon Sidewinder's termination of this Ground Lease pursuant to Section 15.2.b. due to CTUB's default, CTUB shall leave in place, in good and operable condition, and not remove the Project for so much of the remainder of the full Term as Sidewinder shall require so as to allow continuing operation and use of the Project as Sidewinder's remedy under Section 15.2.a., subject to PSC approval as specified therein.

17.4 Abandonment; Mandatory Removal. To the extent CTUB chooses not to voluntarily remove any component of the Project pursuant to Section 17.2 or not to remove any other fixtures, equipment, improvements, or other property of CTUB installed or placed upon the Leased Premises by CTUB, Sidewinder may, subject to PSC approval, either: (i) determine that some or all of such items not removed from the Leased Premises by CTUB shall remain upon the Leased Premises, in which case such items shall be deemed abandoned by CTUB to Sidewinder and be Sidewinder's property for all purposes to do with as Sidewinder may elect; or (ii) demand that CTUB remove some or all of such items from the Leased Premises and restore the Leased Premises to the condition existing prior to construction and installation of the Project, to the extent practicable, in which case CTUB shall comply with Sidewinder's demand as expeditiously as

practicable, and the Term shall be deemed extended on a day-by-day basis during such efforts.

ARTICLE XVIII -- WASTE; GOVERNMENTAL REGULATIONS

18.1 Waste or Nuisance. CTUB shall not commit or suffer to be committed any waste upon the Leased Premises or any nuisance or any act which may disturb the quiet enjoyment of any person.

18.2 Governmental Regulations. CTUB shall, at CTUB's sole cost and expense, comply with all of the requirements of all federal, state, county, municipal, and other applicable governmental authorities, now in force or which may hereafter be in force, pertaining to the Leased Premises.

ARTICLE XIX -- REIMBURSEMENT

All terms, covenants, and conditions herein contained to be performed by CTUB shall be performed at its sole expense and if Sidewinder shall pay any sum of money or do any act which requires the payment of money by reason of the failure, neglect, or refusal of CTUB to perform such terms, covenants, or conditions, the sum of money so paid by Sidewinder shall be immediately payable by CTUB to Sidewinder as additional rent.

ARTICLE XX -- ASSIGNMENT & SUBLETTING

20.1 Binding Effect. Subject to the following provisions of this Article XX, this Ground Lease shall be binding upon, and inure to the benefit of and be enforceable by, the Parties and their respective successors and assigns.

20.2 No Assignment. CTUB shall not, without first obtaining Sidewinder's prior written consent, such consent to not be unreasonably withheld, in each instance: (i) assign, transfer, mortgage, pledge, hypothecate, or encumber, or permit to exist a lien or charge upon, this Ground Lease or any interest therein; (ii) allow or permit any transfer of or lien upon this Ground Lease or any interest therein by operation of law; (iii) sublet the Leased Premises or any part thereof; or (iv) permit the use or occupancy of the Leased Premises or any part thereof by anyone other than CTUB and its employees, subject to Article VI and Section 15.2.a. In no event shall this Ground Lease be assigned or assignable by voluntary or involuntary bankruptcy proceedings or otherwise, and in no event shall this Ground Lease or any rights or privileges hereunder be an asset of CTUB under any bankruptcy, insolvency, or reorganization proceedings, except as provided by law. Any

assignment or sublease which is not in compliance with this Section 20.2 shall be *void ab initio* and, at the option of Sidewinder, shall constitute a material default by CTUB under this Ground Lease.

20.3 CTUB's Obligations. No assignment or sublease by CTUB, whether with or without the consent of Sidewinder, shall relieve CTUB of any obligation to be performed by CTUB under this Ground Lease, whether arising before or after the assignment or sublease.

20.4 Assumption of Obligations. Each assignee shall assume all obligations of CTUB under this Ground Lease and shall be and remain liable jointly and severally with CTUB for the performance of all the terms, covenants, conditions, and agreements contained in this Ground Lease to be performed by CTUB for the entire Term. No assignment otherwise permitted hereunder shall be binding on Sidewinder unless such assignee or CTUB shall deliver to Sidewinder a counterpart of such assignment and an instrument in recordable form, in substance and form acceptable to Sidewinder, executed by the assignee, and containing the assignee's covenant assuming obligations consistent with the requirements of this Section 20.4, but the failure or refusal of the assignee to execute such instrument of assumption shall not release or discharge the assignee from its liability as set forth above.

ARTICLE XXI -- REPRESENTATIONS & WARRANTIES

21.1 Representations and Warranties of CTUB. CTUB hereby represents and warrants to Sidewinder as of the Effective Date and the Term Commencement Date as follows:

a. CTUB is a municipal utility board and political subdivision of the State of West Virginia duly constituted and validly existing under the laws of the State of West Virginia, with full legal right, power, and authority to enter into and perform its obligations under this Ground Lease;

b. The execution and delivery of this Ground Lease, the contractual arrangements contemplated herein, and the performance of the obligations and duties of CTUB hereunder, have been duly authorized by all necessary and appropriate action in accordance with Applicable Law;

c. This Ground Lease has been duly executed and delivered by a duly and properly authorized officer or administrator of CTUB and constitutes legal, valid, and binding obligations of CTUB, enforceable against CTUB in accordance with its terms;

d. Neither the execution and delivery by CTUB of this Ground Lease, nor the

performance by CTUB of its obligations hereunder, nor the consummation by CTUB of the transactions contemplated hereby conflicts with, violates, or results in a breach of: (i) any Applicable Law; or (ii) any term or condition of any judgment, decree, mortgage, indenture, lease, agreement, or instrument to which CTUB is a party or by which CTUB or any of its properties or assets are bound, or constitutes a default under any such judgment, decree, mortgage, indenture, lease, agreement, or instrument; and

e. There is no action, suit, or other proceeding at law or in equity, before or by any court or governmental authority, pending or, to CTUB's knowledge, threatened against CTUB which is or reasonably could be expected to materially and adversely affect the execution or delivery of this Ground Lease or the validity or enforceability of this Ground Lease, or which would materially and adversely affect the performance by CTUB of its obligations hereunder.

21.2 Representations and Warranties of Sidewinder. Sidewinder hereby represents and warrants to CTUB as of the Effective Date and the Term Commencement Date as follows:

a. Sidewinder is a limited liability company duly organized and validly existing under the laws of the State of Delaware, with full legal right, power, and authority to enter into and perform its obligations under this Ground Lease. Sidewinder is authorized to transact business in the State of West Virginia;

b. The execution and delivery of this Ground Lease, the contractual arrangements contemplated herein, and the performance of the obligations and duties of Sidewinder, have been duly authorized by all necessary and appropriate action in accordance with Applicable Law;

c. This Ground Lease has been duly executed and delivered by a duly and properly authorized manager, officer, or member of Sidewinder and constitutes legal, valid, and binding obligations of Sidewinder, enforceable against Sidewinder in accordance with its terms;

d. Neither the execution and delivery by Sidewinder of this Ground Lease, nor the performance by Sidewinder of its obligations hereunder, nor the consummation by Sidewinder of the transactions contemplated hereby conflicts with, violates, or results in a breach of: (i) any Applicable Law; or (ii) any term or condition of any judgment, decree, mortgage, indenture, lease, agreement, or instrument to which Sidewinder is a party or by which Sidewinder or any of its properties or assets are bound, or constitutes a default under

any such judgment, decree, mortgage, indenture, lease, agreement, or instrument; and

e. There is no action, suit, or other proceeding at law or in equity, before or by any court or governmental authority, pending or, to Sidewinder's knowledge, threatened against Sidewinder which is or reasonably could be expected to materially and adversely affect the execution or delivery of this Ground Lease or the validity or enforceability of this Ground Lease, or which would materially and adversely affect the performance by Sidewinder of its obligations hereunder.

ARTICLE XXII -- RECORDING

Either Party may record a fully executed copy of this Ground Lease in the Office of the Clerk of the County Commission of Jefferson County, West Virginia.

ARTICLE XXIII -- MISCELLANEOUS

23.1 Compliance with Laws. Each Party shall comply with all Applicable Law in performing under and with respect to this Ground Lease.

23.2 Confidentiality. Throughout the Term and following its expiration or earlier termination, each Party shall maintain in confidence and not disclose to any person or use to the detriment of the other Party any written, oral, or other information obtained in confidence from the other Party and which reasonably should be understood to be considered confidential or proprietary information, or which is so designated in writing, unless disclosure of such information is required by Applicable Law.

23.3 Further Assurances. Each Party agrees to execute and deliver any instruments and to perform any acts as may be reasonably requested by the other Party in order to give full effect to this Ground Lease and to facilitate the transactions herein contemplated.

23.4 Notices. All notices hereunder shall be in writing and shall be sufficiently given for all purposes hereunder if delivered personally (with execution of a receipt therefore) or by nationally recognized overnight delivery service. Notice given personally shall be deemed delivered upon execution of a receipt therefor. Notice given by nationally recognized overnight delivery service shall be sent to the recipient's address set forth below (or such other address for notice as the recipient may from time to time specify by notice given in accordance with this provision) and shall be deemed delivered on the first business day after deposit of the same with the delivery service for next business day delivery:

Notices to CTUB shall be addressed to:

Utility Manager
Charles Town Utility Board
661 South George Street
Charles Town, West Virginia 25414

with copies to:

Robert R. Rodecker, Esq.
Kay Casto & Chaney PLLC
P.O. Box 2031
Charleston, WV 25327

Stephen G. Higgins, Esq.
Kay Casto & Chaney PLLC
150 Clay Street
Morgantown, WV 265011

Notices to Sidewinder shall be addressed to:

Sidewinder Enterprises, LLC
4340 Von Karmen Avenue, Suite 380
Newport Beach, California 92660

with a copy to:

Michael J. Funk, Esq.
Steptoe & Johnson PLLC
1250 Edwin Miller Blvd., Suite 300
Martinsburg, WV 25404

23.5 Construction.

a. The terms "hereby," "hereof," "herein," "hereunder," and any similar terms refer to this Ground Lease. As used in this Ground Lease, unless the context of the usage of such term clearly indicates otherwise: (a) the word "or" is not exclusive; (b) the words "include," "includes," and "including" shall be deemed to be followed by the phrase "without limitation"; (c) any pronoun shall include the corresponding masculine, feminine, and neuter forms; and (d) words in the singular number include words in the plural and vice versa. All references to time herein shall refer to Eastern Time. Unless expressly provided otherwise, any reference herein to a period of "days" means consecutive calendar days.

b. The Parties acknowledge and agree that: (i) each Party is of equal bargaining strength; (ii) each Party has actively participated in the drafting, preparation,

and negotiation of this Ground Lease; (iii) each Party has consulted with such Party's own counsel, and such other professional advisors as such Party has deemed appropriate, relative to any and all matters contemplated under this Ground Lease; (iv) each Party and such party's counsel and advisors have reviewed this Ground Lease; (v) each Party has agreed to enter into this Ground Lease following such review and the rendering of such advice; and (vi) any rule of construction to the effect that ambiguities are to be resolved against the drafting parties shall not apply in the interpretation of this Ground Lease or any portions hereof.

23.6 Force Majeure. A Party (the "**Non-Performing Party**") shall not be deemed in default under this Ground Lease as a result of its failure to timely perform any act or obligation on the Non-Performing Party's part to be performed (excepting any obligation to pay rental payments or other charges payable hereunder) if such failure is caused by an event beyond the reasonable control of the Non-Performing Party (and not caused by the negligence or intentional acts or omissions of the Non-Performing Party), including acts of God, fire, flood, drought, extreme weather, explosion, earthquake, general Internet outage, acts of war or terrorism, invasion, act of foreign enemies, civil disorder, riot, civil war, inability to procure or delay in procuring materials, embargo, riot, labor strike or slow-down or lock out (unless restricted solely to employees of the Non-Performing Party), pandemic, epidemic, or intervention of any government or authority (an "**Event of Force Majeure**"), and any time for performance by the Non-Performing Party shall be extended by the period of delay resulting from such Event of Force Majeure. The Non-Performing Party shall give notice to the other Party of an Event of Force Majeure promptly upon it becoming known to the Non-Performing Party. Notwithstanding the occurrence of any Event of Force Majeure, the Non-Performing Party shall continue to perform all of its remaining obligations under the Ground Lease and the Agreement, to the extent practicable, and shall use commercially reasonable efforts to mitigate the effects of such Event of Force Majeure on such obligations.

23.7 Headings. The headings used in this Ground Lease are for convenience only and shall have no effect upon the construction or interpretation of this Ground Lease.

23.8 Waiver. No waiver by either Party with respect to any default, misrepresentation, or breach of warranty, obligation, or covenant hereunder shall be deemed to extend to any prior or subsequent default, misrepresentation, or breach of warranty, obligation, or covenant hereunder or affect in any way any rights arising by virtue of any prior or subsequent such occurrence.

23.9 Severability. If any provision of this Ground Lease, or the application thereof to

any person or circumstance, shall, to any extent, be held in any proceeding to be invalid or unenforceable, the remainder of this Ground Lease, or the application of such provision to any person or circumstances other than those to which it is held to be invalid or unenforceable, shall not be affected thereby, and shall be valid and enforceable to the fullest extent permitted by law, but only if and to the extent such enforcement would not materially and adversely frustrate the Parties' essential objectives herein.

23.10 Entire Agreement. This Ground Lease contains the entire agreement between the Parties concerning the subject matter hereof and supersedes all other agreements and understandings of the Parties concerning the same. Each of the Parties stipulates that the other has not made any representation with respect to the subject matter of this Ground Lease except such representations as are specifically set forth in this Ground Lease.

23.11 Amendment. Neither this Ground Lease, nor any of the terms or provisions hereof, may be amended, modified, supplemented, or waived, except by a written instrument signed by both the Parties.

23.12 Counterparts. This Ground Lease may be executed in any number of counterparts, each of which shall, for all purposes, be deemed to be an original, but all such counterparts shall together constitute one and the same instrument.

23.13 Lease Validity. Submission of the Ground Lease to CTUB for its examination and/or execution does not constitute a reservation of or option for the Leased Premises for the benefit of CTUB. This Ground Lease shall have no force, effect, or validity as a lease or otherwise unless and until duly executed by each of the Parties and delivered to the other Party.

23.14 Governing Law. This Ground Lease shall be construed in accordance with and governed by the internal laws of the State of West Virginia, without giving effect to any choice or conflict of laws provision or rule (whether of the State of West Virginia or any other jurisdiction).

23.15 Jurisdiction and Venue. Any action or proceeding seeking to enforce any provision of, or based on any right arising out of, this Ground Lease may be brought against either of the Parties in the state or federal courts located in Jefferson County, West Virginia, and each Party irrevocably consents to the exclusive jurisdiction of such courts (and of the appropriate appellate courts) in any such action or proceeding and waives any objection to venue laid therein.

[remainder of page intentionally blank – signature page follows]

IN WITNESS WHEREOF, the Parties, intending to be legally bound, have caused this Ground Lease to be executed by their duly authorized representatives as of the day and year first above written.

CITY OF CHARLES TOWN, by and through the CHARLES TOWN UTILITY BOARD

ATTEST:

_____
Its Clerk

By:_____
Its: Chairman

SIDEWINDER ENTERPRISES, LLC

By: SIDEWINDER MANAGER, LLC
Its: Manager

By: _____
Jeffrey Fischbeck

and

_____
Sean Masterson
Its: Co-Managers

EXHIBIT "A"

ALTA/ACSM SURVEY OF SIDEWINDER PARCEL

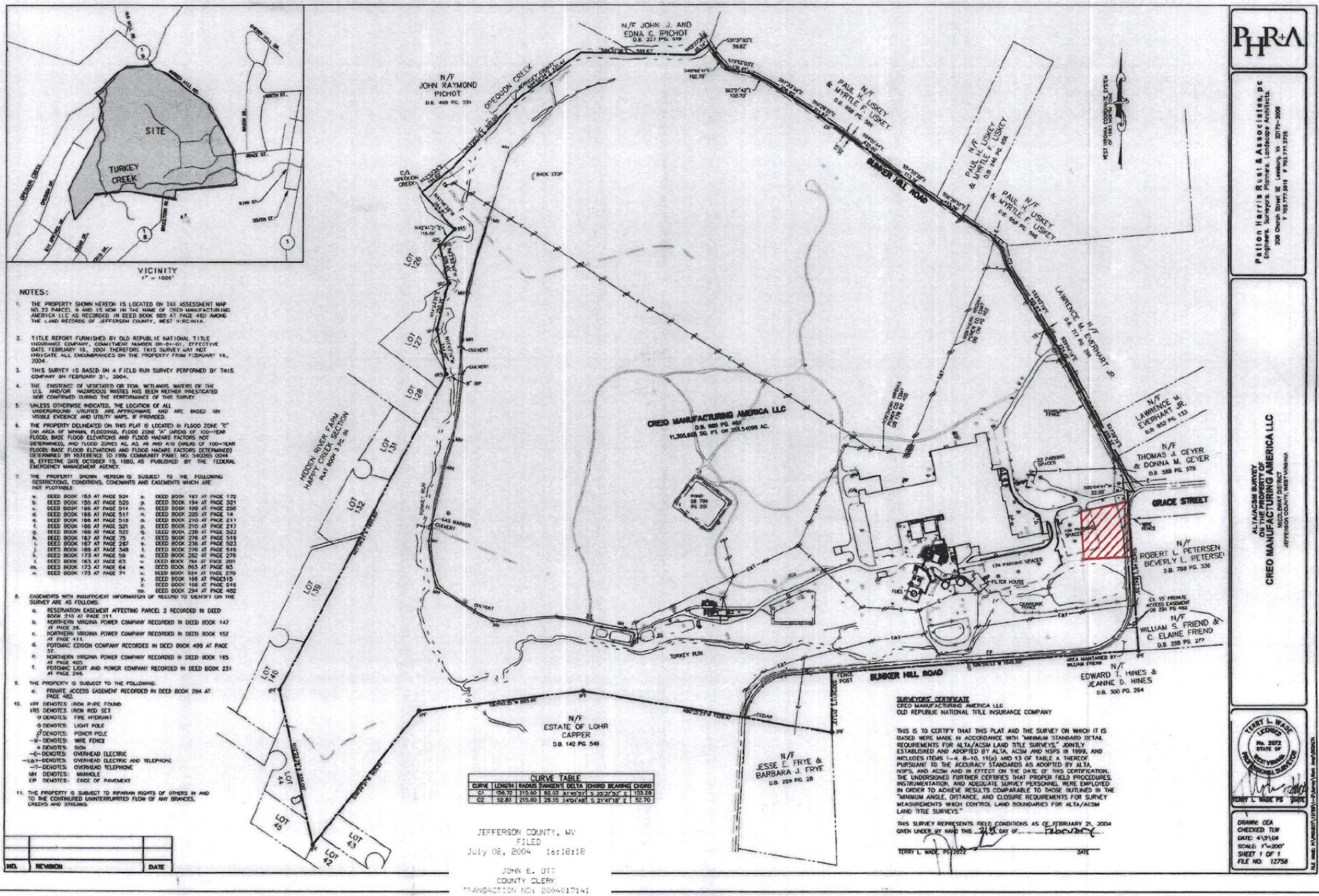
VICINITY
1" = 1000'
SITE
TURKEY CREEK
NOTES:
1. THE PROPERTY SHOWN HEREON IS LOCATED ON TAX ASSESSMENT MAP NO.22 PARCEL 9 AND IS NOW IN THE NAME OF CREO MANUFACTURING AMERICA LLC AS RECORDED IN DEED BOOK 985 AT PAGE 460 AMONG THE LAND RECORDS OF JEFFERSON COUNTY, WEST VIRGINIA.
2. TITLE REPORT FURNISHED BY OLD REPUBLIC NATIONAL TITLE INSURANCE COMPANY, COMMITMENT NUMBER OR-04-01, EFFECTIVE DATE FEBRUARY 18, 2004 THEREFORE THIS SURVEY MAY NOT INDICATE ALL ENCUMBRANCES ON THE PROPERTY FROM FEBRUARY 18, 2004.
3. THIS SURVEY IS BASED ON A FIELD RUN SURVEY PERFORMED BY THIS COMPANY ON FEBRUARY 21, 2004.
4. THE EXISTENCE OF VEGETATED OR TIDAL WETLANDS, WATERS OF THE U.S. AND/OR HAZARDOUS WASTES HAS BEEN NEITHER INVESTIGATED NOR CONFIRMED DURING THE PERFORMANCE OF THIS SURVEY.
5. UNLESS OTHERWISE INDICATED, THE LOCATION OF ALL UNDERGROUND UTILITIES ARE APPROXIMATE AND ARE BASED ON VISIBLE EVIDENCE AND UTILITY MAPS, IF PROVIDED.
6. THE PROPERTY DELINEATED ON THIS PLAT IS LOCATED IN FLOOD ZONE "C" (AN AREA OF MINIMAL FLOODING), FLOOD ZONE "A" (AREAS OF 100-YEAR FLOOD; BASE FLOOD ELEVATIONS AND FLOOD HAZARD FACTORS NOT DETERMINED), AND FLOOD ZONES A2, A3, A6 AND A10 (AREAS OF 100-YEAR FLOOD; BASE FLOOD ELEVATIONS AND FLOOD HAZARD FACTORS DETERMINED) DETERMINED BY REFERENCE TO FIRM COMMUNITY PANEL NO. 5403850044 B, EFFECTIVE DATE OCTOBER 15, 1980, AS PUBLISHED BY THE FEDERAL EMERGENCY MANAGEMENT AGENCY.
7. THE PROPERTY SHOWN HEREON IS SUBJECT TO THE FOLLOWING RESTRICTIONS, CONDITIONS, COVENANTS AND EASEMENTS WHICH ARE NOT PLOTTABLE:
a. DEED BOOK 153 AT PAGE 524
b. DEED BOOK 155 AT PAGE 520
c. DEED BOOK 166 AT PAGE 514
d. DEED BOOK 166 AT PAGE 517
e. DEED BOOK 166 AT PAGE 518
f. DEED BOOK 166 AT PAGE 521
g. DEED BOOK 166 AT PAGE 522
h. DEED BOOK 167 AT PAGE 75
i. DEED BOOK 167 AT PAGE 267
j. DEED BOOK 169 AT PAGE 348
k. DEED BOOK 173 AT PAGE 59
l. DEED BOOK 163 AT PAGE 63
m. DEED BOOK 173 AT PAGE 64
n. DEED BOOK 173 AT PAGE 71
o. DEED BOOK 197 AT PAGE 172
p. DEED BOOK 194 AT PAGE 321
q. DEED BOOK 198 AT PAGE 226
n. DEED BOOK 205 AT PAGE 14
o. DEED BOOK 210 AT PAGE 217
p. DEED BOOK 210 AT PAGE 217
q. DEED BOOK 235 AT PAGE 523
r. DEED BOOK 276 AT PAGE 519
s. DEED BOOK 236 AT PAGE 523
t. DEED BOOK 276 AT PAGE 519
u. DEED BOOK 282 AT PAGE 276
v. DEED BOOK 784 AT PAGE 201
w. DEED BOOK 865 AT PAGE 93
x. DEED BOOK 924 AT PAGE 279
y. DEED BOOK 166 AT PAGE515
z. DEED BOOK 166 AT PAGE 516
aa. DEED BOOK 294 AT PAGE 482
8. EASEMENTS WITH INSUFFICIENT INFORMATION OF RECORD TO IDENTIFY ON THE SURVEY ARE AS FOLLOWS:
a. RESERVATION EASEMENT AFFECTING PARCEL 2 RECORDED IN DEED BOOK 210 AT PAGE 211
b. NORTHERN VIRGINIA POWER COMPANY RECORDED IN DEED BOOK 147 AT PAGE 26.
c. NORTHERN VIRGINIA POWER COMPANY RECORDED IN DEED BOOK 152 AT PAGE 411.
d. POTOMAC EDISON COMPANY RECORDED IN DEED BOOK 499 AT PAGE 57.
e. NORTHERN VIRGINIA POWER COMPANY RECORDED IN DEED BOOK 165 AT PAGE 460.
f. POTOMAC LIGHT AND POWER COMPANY RECORDED IN DEED BOOK 231 AT PAGE 246.
9. THE PROPERTY IS SUBJECT TO THE FOLLOWING:
a. PRIVATE ACCESS EASEMENT RECORDED IN DEED BOOK 294 AT PAGE 482.
10. IPF DENOTES IRON PIPE FOUND
IRS DENOTES IRON ROD SET
DENOTES: FIRE HYDRANT
DENOTES: LIGHT POLE
DENOTES: POWER POLE
DENOTES: WIRE FENCE
DENOTES: SIGN
DENOTES: OVERHEAD ELECTRIC
DENOTES: OVERHEAD ELECTRIC AND TELEPHONE
DENOTES: OVERHEAD TELEPHONE
MH DENOTES: MANHOLE
EP DENOTES: EDGE OF PAVEMENT
11. THE PROPERTY IS SUBJECT TO RIPARIAN RIGHTS OF OTHERS IN AND TO THE CONTINUED UNINTERRUPTED FLOW OF ANY BRANCHES, CREEKS AND STREAMS.
NO. REVISION DATE
N/F JOHN J. AND EDNA C. PICHOT D.B. 227 PG. 139
N/F JOHN RAYMOND PICHOT D.B. 469 PG. 231
OPEQUON CREEK
PAUL H. LISKEY & MYRTLE F. LISKEY D.B. 848 PG. 345
BUNKER HILL ROAD
LAWRENCE M. EVERHART JR. D.B. 713 PG. 196
N/F LAWRENCE M. EVERHART JR. D.B. 852 PG. 133
CREO MANUFACTURING AMERICA LLC D.B. 985 PG. 460 11,300,808 SQ. FT OR 259.54098 AC.
HIDDEN RIVER FARM HAPPY CREEK SECTION PLAT BOOK 3 PG. 28
LOT 126
LOT 127
LOT 128
LOT 131
LOT 132
LOT 139
LOT 140
LOT 41
LOT 42
LOT 43
LOT 45
POND DB 784 PG. 201
22 PARKING SPACES
GRACE STREET
N/F THOMAS J. GEYER & DONNA M. GEYER D.B. 588 PG. 579
N/F ROBERT L. PETERSEN BEVERLY L. PETERSEN D.B. 788 PG. 330
174 PARKING SPACES
FILTER HOUSE
CX 15' PRIVATE ACCESS EASEMENT DB 294 PG 482
N/F WILLIAM S. FRIEND & C. ELAINE FRIEND D.B. 288 PG. 277
AREA MAINTAINED BY WILLIAM FRIEND
N/F EDWARD T. HINES & JEANNE D. HINES D.B. 300 PG. 264
N/F ESTATE OF LOHR CAPPER D.B. 142 PG. 549
N/F JESSE E. FRYE & BARBARA J. FRYE D.B. 229 PG. 28
TURKEY RUN
TURKEY RUN ROAD
GAS MARKER
CULVERT
FENCE POST
CEDAR
WEST VIRGINIA COORDINATE SYSTEM NORTH ZONE (NAD 83)
CURVE TABLE
CURVE | LENGTH | RADIUS | TANGENT | DELTA | CHORD BEARING | CHORD
C1 | 156.72 | 215.00 | 82.03 | 41°46'07" | S 30°37'05" E | 153.28
C2 | 52.83 | 215.00 | 26.55 | 14°04'48" | S 21°47'18" E | 52.70
SURVEYORS' CERTIFICATE
CREO MANUFACTURING AMERICA LLC
OLD REPUBLIC NATIONAL TITLE INSURANCE COMPANY
THIS IS TO CERTIFY THAT THIS PLAT AND THE SURVEY ON WHICH IT IS BASED WERE MADE IN ACCORDANCE WITH "MINIMUM STANDARD DETAIL REQUIREMENTS FOR ALTA/ACSM LAND TITLE SURVEYS," JOINTLY ESTABLISHED AND ADOPTED BY ALTA, ACSM AND NSPS IN 1999, AND INCLUDES ITEMS 1-4, 8-10, 11(a) AND 13 OF TABLE A THEREOF. PURSUANT TO THE ACCURACY STANDARDS AS ADOPTED BY ALTA, NSPS, AND ACSM AND IN EFFECT ON THE DATE OF THIS CERTIFICATION, THE UNDERSIGNED FURTHER CERTIFIES THAT PROPER FIELD PROCEDURES, INSTRUMENTATION, AND ADEQUATE SURVEY PERSONNEL WERE EMPLOYED IN ORDER TO ACHIEVE RESULTS COMPARABLE TO THOSE OUTLINED IN THE "MINIMUM ANGLE, DISTANCE, AND CLOSURE REQUIREMENTS FOR SURVEY MEASUREMENTS WHICH CONTROL LAND BOUNDARIES FOR ALTA/ACSM LAND TITLE SURVEYS."
THIS SURVEY REPRESENTS FIELD CONDITIONS AS OF FEBRUARY 21, 2004
GIVEN UNDER MY HAND THIS 21st DAY OF February
TERRY L. WADE PS 2072 DATE
JEFFERSON COUNTY, WV
FILED
July 02, 2004 16:18:18
JOHN E. OTT
COUNTY CLERK
TRANSACTION NO: 2004017141
PLATS (24 x 18)
Book: 00021 Page: 00014
PHR+A
Patton Harris Rust & Associates, pc
Engineers. Surveyors. Planners. Landscape Architects.
208 Church Street SE Leesburg, VA 22075-3009
T 703.777.3616 F 703.777.3726
ALTA/ACSM SURVEY ON THE PROPERTY OF CREO MANUFACTURING AMERICA LLC
MIDDLEWAY DISTRICT
JEFFERSON COUNTY, WEST VIRGINIA
TERRY L. WADE LICENSED No. 2072 STATE OF WEST VIRGINIA PROFESSIONAL SURVEYOR
TERRY L. WADE PS DATE
DRAWN: CEA
CHECKED: TLW
DATE: 4/5/04
SCALE: 1"=200'
SHEET 1 OF 1
FILE NO: 12758

EXHIBIT "B"

PLAT OF LEASED PREMISES

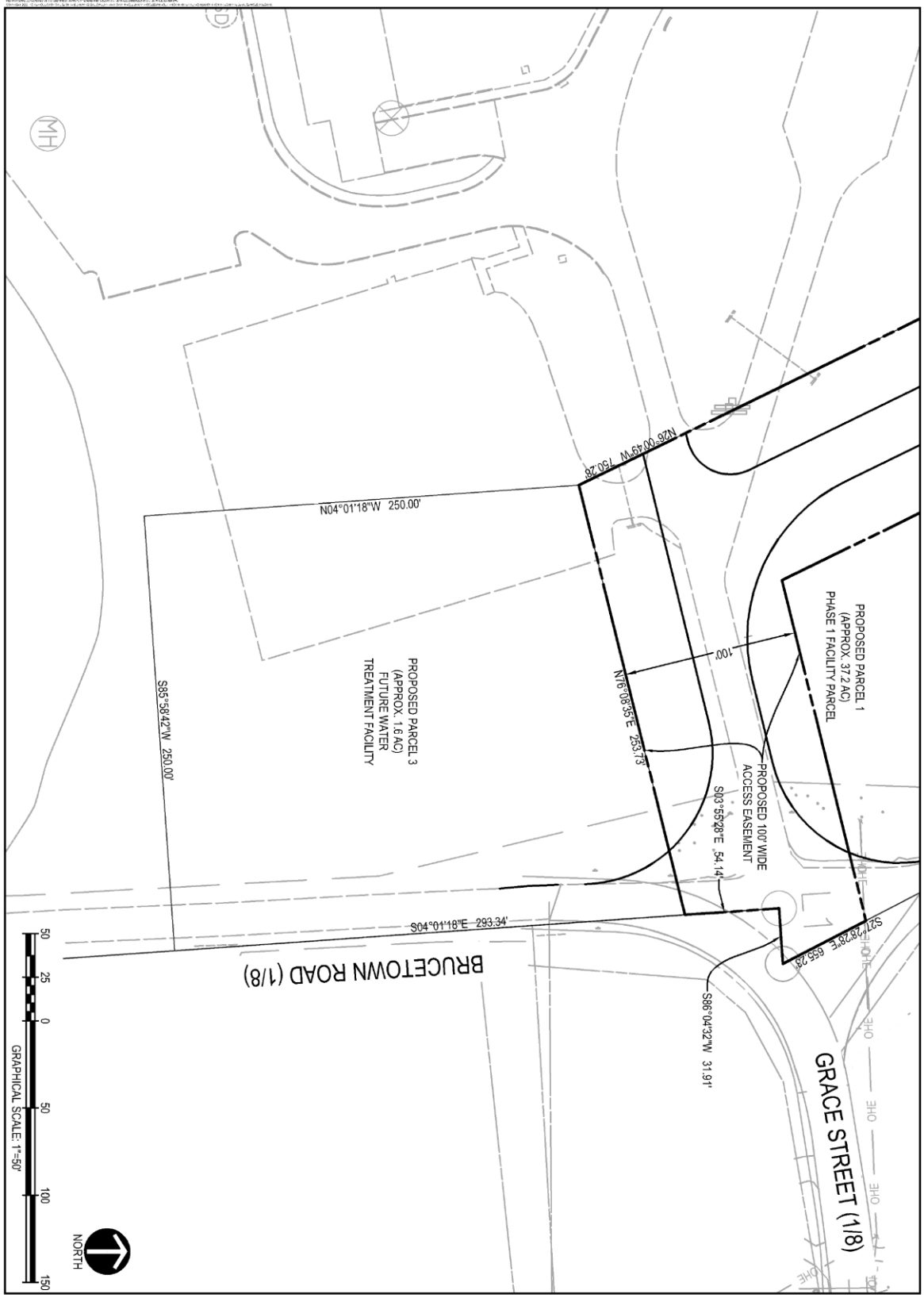

PROPOSED CTUB WATER TREATMENT PLANT PARCEL EXHIBIT

MOUNTAIN PURE

MIDDLEWAY TAX DISTRICT
JEFFERSON COUNTY, WEST VIRGINIA

SCALE: HORIZ.: 1"=50' VERT.:
DATE: MAY 9 2025
JOB: 3138.0102
DRAWN: RJP CHECK: JPG
CADD: 2025-04-09 CTUB FAMILY DEVELOPMENT DWG
NCS:
SHEET: 1 OF 1

REVISIONS

INTEGRITY FEDERAL SERVICES

CIVIL ENGINEERING • LANDSCAPE ARCHITECTURE • PLANNING

148 S. Queen Street, Suite 201 • Phone: 304-725-8456
Martinsburg, WV 25401 • www.ifs-ae.com

EXHIBIT "C"

MEMORANDUM OF TERM COMMENCEMENT DATE

THIS MEMORANDUM OF TERM COMMENCEMENT DATE is made and entered into as of the _____ day of _____, 20___, by and between SIDEWINDER ENTERPRISES, LLC (hereinafter, "**Sidewinder**") and the CITY OF CHARLES TOWN, by and through the CHARLES TOWN UTILITY BOARD (hereinafter, "**CTUB**").

RECITALS

A. Sidewinder and CTUB have previously executed that certain Ground Lease Agreement dated the _____ day of _____, 2025, (the "**Ground Lease**"), pursuant to which Sidewinder has leased to CTUB, and CTUB has leased from Sidewinder, the Leased Premises described in the Ground Lease, being approximately 1.6 acres of land, located in the southwest portion of the Sidewinder Parcel described in the Ground Lease.

B. Pursuant to Section 2.1 of the Ground Lease, Sidewinder and CTUB agreed to execute this Memorandum of Term Commencement Date to confirm the Term Commencement Date of the Term.

C. All capitalized terms used herein and not defined herein shall have the meanings assigned thereto in the Ground Lease.

AGREEMENT

NOW THEREFORE, the Parties confirm and agree that the following information shall control with respect to the Ground Lease:

1. The Term Commencement Date of the Ground Lease is _____ _____, 20___.

2. CTUB ☐ HAS ☐ HAS NOT paid the fixed rent for the entire term on the Term Commencement Date as permitted under Article III of the Ground Lease.

3. Except as may have been amended above, Sidewinder and CTUB hereby ratify and confirm the Ground Lease in all respects. This Memorandum of Term Commencement Date may be executed in one or more counterparts, any number of which shall be taken as one original.

[remainder of page intentionally blank – signature page follows]

IN WITNESS WHEREOF, the Parties, intending to be legally bound, have caused this Memorandum of Term Commencement Date to be executed by their duly authorized representatives as of the day and year first above written.

CITY OF CHARLES TOWN, by and through the CHARLES TOWN UTILITY BOARD

ATTEST:

_____
Its Clerk

By:_____
Its: Chairman

SIDEWINDER ENTERPRISES, LLC

By: SIDEWINDER MANAGER, LLC
Its: Manager

By: _____
Jeffrey Fischbeck

and

_____
Sean Masterson
Its: Co-Managers

CHARLES TOWN UTILITY BOARD

Wednesday, August 27, 2025

Regular Meeting

661 South George Street
Charles Town, WV 25414

Side Letter

Attachments:

Final Side Letter.pdf

SIDEWINDER ENTERPRISES, LLC

4340 Von Karmen Avenue, Suite 380
Newport Beach, CA 92660

8 August 2025

Charles Town Utility Board
101 E. Washington Street
Charles Town, WV 25414
Attn: Kristen Stolipher, General Manager

Re: Side Letter to Agreement

Dear Ms. Stolipher,

As you are aware, Sidewinder Enterprises, LLC ("**Sidewinder**") believes that certain provisions of the proposed agreement between the Charles Town Utility Board, ("**CTUB**") and Sidewinder (collectively, the "**Parties**"), a revised version of which agreement was approved by Recommended Decision of the Administrative Law Judge and became the final Order of WV PSC on June 22, 2025 in Case No. 25-0079-W-PC (the "**Agreement**"), may be incorrect, imprecise or ambiguous. Accordingly, Sidewinder submits this Side Letter to address such issues in the Agreement.

Sidewinder proposes that the CTUB consider and accept the following provisions of this Side Letter at the time of the execution of the Agreement and a related Ground Lease Agreement ("**Lease**"):

Sidewinder has identified certain provisions of the Agreement that it believes are incorrect, imprecise, or ambiguous and should be corrected and/or clarified (the "**Agreement Issues**"), as follows:

1. Section 1.01 of the Agreement states that up to three (3) groundwater wells will supply the Development. In fact, one well will be the primary operating well, another well will be a back-up well, and a third well will be only a monitoring well. That inaccuracy should be corrected.

2. The Agreement does not adequately and accurately define the "Project," as it is currently contemplated. Subject to subsequent changes specified in the final approved plans for the Development referenced below (and as approved by CTUB under Section 1.02 of the Agreement), the Agreement should be clarified to reflect the following:

(a) the water system for the Development will consist of: (i) the primary operating well and back-up well referenced above (the "**Supply Wells**"); (ii) a raw water transmission pipeline running from the Supply Wells to the Raw Water Storage Tank (the "**Raw Water Pipeline**"); (iii) a water storage tank located on Sidewinder's property (the "**Raw Water Storage Tank**"); (iv) one or more water lines running from the Raw Water Storage Tank to industrial/commercial operations on Sidewinder's property (collectively, the "**Facilities Supply Line**"); (v) a water line running from the Raw Water Storage Tank to the Treatment Plant (the "**Treatment Supply Line**"); (vi) a water treatment plant located upon a portion of Sidewinder's property leased to CTUB (the "**Treatment Plant**"); (vii) one or more water lines running from the Treatment Plant to facilities on Sidewinder's property (collectively, the "**Finished Water Main**"); and (viii) such other water mains and lines, that CTUB may elect to construct at its own expense, running from the Treatment Plant to third-parties off Sidewinder's property (the "**CTUB Mains**");

(b) Sidewinder will be responsible for the construction and cost of the entire relevant water system specified above except the CTUB Mains; and

(c) the "Project," as such term is used in the Agreement, and which will be transferred to CTUB, will consist of: (i) the portion of the Raw Water Pipeline located within a WV DOH right-of-way; (ii) the Treatment Supply Line; (iii) the Treatment Plant; (iv) the Finished Water Main; and (v) such pumping facilities, electrical, instrumentation and controls, and related appurtenances as necessary for the operation of the above items (i) through (iv). The CTUB Mains will be the property of CTUB at all times. Sidewinder will retain and not transfer to CTUB the following items: (v) the Supply Wells; (vi) the portion of the Raw Water Pipeline not located within a WV DOH right-of-way; (vii) the Raw Water Storage Tank; (viii) the Facilities Supply Line; and (ix) such pumping facilities, electrical, instrumentation and controls, and related appurtenances as necessary for the operation of the above items (v) through (viii).

3. Section 2.06 of the Agreement incorrectly refers to a "Sewer Collection System" rather than to the Project. That inaccuracy should be corrected.

4. Section 3.03 of the Agreement provides that Sidewinder shall deliver to CTUB ownership of the Project "including . . . all real property . . . necessary for the . . . the Project." In fact, no interests in real property are to be transferred to CTUB pursuant to the Agreement except (i) waterline easements located within WV DOH rights-of-way and (ii) the leasehold under the referenced Lease agreement. That inaccuracy should be corrected.

5. Section 4.01 of the Agreement provides that Sidewinder shall pump from its wells water sufficient for CTUB to treat and sell, beyond Sidewinder's requirements, an amount of water to serve 200 equivalent dwelling units ("**EDUs**", with an EDU equal to 150 gallons per day), which totals 30,000 gallons per day. In fact, Sidewinder has agreed to furnish 50,000 gallons of raw water per day to CTUB, which would serve approximately 333 EDUs of 150 gallons per day. That inaccuracy should be corrected.

Accordingly, the Parties agree that, promptly following finalization of relevant plans for such development, the Parties will negotiate a mutually agreed proposed amendment to the Agreement that addresses the Agreement Issues in the manner indicated above, submit the same to WV PSC for approval, and execute and enter the same following WV PSC approval.

If the Directors of CTUB are in agreement with the above provisions of this Side Letter, please have the signature line below duly executed.

Thank you for your attention and cooperation.

Sincerely,

Jeff Fischbeck
&
Sean Masterson

The City of Charles Town, by and through the Charles Town Utility Board, hereby agrees to the provisions of the Side Letter above.

CITY OF CHARLES TOWN, by and through the
CHARLES TOWN UTILITY BOARD

ATTEST: _____
Its Clerk

By: _____
Its: Chairman

CHARLES TOWN UTILITY BOARD

Wednesday, August 27, 2025

Regular Meeting **661 South George Street**
Charles Town, WV 25414

WVDOH Permit Extension

Attachments:

Final Sidewinder WVDOH Appr Permit.pdf

FORM MM-109

Revised 05-17-2023

West Virginia Department of Transportation
Division of Highways
Right of Way Entry Permit Application

PERMIT NO. 5-23-0664U

By signing below, APPLICANT agrees to all terms and conditions (see page 2) associated with this permit to enter upon, under, over, or across the state road right(s) of way of the State of West Virginia.

Applicant: Charles Town Utility Board

Address: 661 S George St., Suite 101 City: Charles Town State: WV Zip: 25414

Phone Number: 304-725-2316 Email: tmarkley@ctubwv.com

Route Type: ☐ US ☑ WV ☐ County ☐ Interstate ☐ HARP Route Number: 51 Milepost: ____ County: Jefferson

Latitude/Longitude at/along Roadway (in decimal degrees): 39.3038*, -77.9900*

Description of Work: Construction of approx. 7,080 LF of 12" PVC W/L in the DOH ROW beginning at the trailer park on Russell Way along WV Rte. 51. Line will run in the DOH ROW along WV 51 to WV 1/7. The line then runs along East Street to Grace Street where it then runs to the entrance of the property along WV Rte. 1/8. Mill and overlay will be required along Grace Street.

Length of Installation: 7,080 Estimated Construction Duration: 6 Months

DOH Project Number/Name (if applicable): ____

Inspection Fees (must check one):

☐ For any inspection fees incurred under this permit
☑ At $0.85 per linear foot of water line installed under this permit
☐ At $3.37 per linear foot of sewer line installed under this permit

CALL BEFORE YOU DIG
1-800-245-4848
MISS UTILITY OF WV

Applicant: [signature] Applicant Title: Engineering Technician

Applicant Printed Name: Travis Markley Date: 8/23/2023

DOH Reviewer: [signature] DOH Reviewer Title: Utility Supervisor

DOH Approver: [signature] FOR DOH Approver Title: District Engineer/Manager

DEPOSIT/BOND REQUIRED: ☒ YES ☐ NO DEPOSIT/BOND AMOUNT: $ 25,000.00
☐ Check Attached ☐ Bond Attached ☒ Bond On File BOND NUMBER: 105344361 DATE: 10-11-11

INSPECTION: ☐ By Owner/Consultant ☐ By Division ☐ Periodic
☐ Full Time ☒ Part Time ☐ No Cost
☒ Reimbursable (Authorization PW1207R)

PERMIT ISSUE DATE: APPROVED
SEP 08 2023
WVDOT
D-5 UTILITIES

CHARLES TOWN UTILITY BOARD

Wednesday, August 27, 2025

Regular Meeting

661 South George Street
Charles Town, WV 25414

WV-002 Charles Town Road Tank – Possible Executive Session under the provision of W. VA Code 6-9a-4(b)(7) - To plan or consider an official investigation or matter relating to crime prevention or law enforcement.

CHARLES TOWN UTILITY BOARD

Wednesday, August 27, 2025

Regular Meeting **661 South George Street**
Charles Town, WV 25414

Chlorine Room Project - Resolution No. 1 - Pay Application No. 1

Attachments:

Resolution No. 1 - Pay App No. 1.pdf

CHARLES TOWN UTILITY BOARD
WATER TREATMENT PLANT
CHLORINE ROOM MODIFICATIONS

RESOLUTION NO. 1

RESOLUTION OF THE CHARLES TOWN UTILITY BOARD APPROVING INVOICES RELATING TO CONSTRUCTION AND OTHER SERVICES FOR THE WATER PROJECT AND AUTHORIZING PAYMENT THEREOF,

WHEREAS, the Charles Town Utility Board (CTUB), has reviewed the invoices attached hereto and incorporated herein by reference relation to the Project and find as follows:

a.) That none of the items for which payment is proposed to be made has formed the basis for any disbursement theretofore made;

b.) Each item for which the payment is proposed to be paid is or was necessary in connection with the Project and constitutes a Cost of the project;

c.) Each of such costs has been otherwise properly incurred; and

d.) Payment for each of the items proposed is due and owing.

NOW, THEREFORE, BE IT RESOLVED by the Charles Town Utility Board that the payment of **"Contractor's Application for Payment No. 01"** as summarized below is hereby authorized and directed:

Vendor	**CTUB Internal Funds**	**Total Approved for Payment**
Snyder Environmental Services	$15,885.00	$15,885.00
Total	**$15,885.00**	**$15,885.00**

ADOPTED BY the City of Charles Town Utility Board, at the meeting held on the 27th day of August, 2025.

By: _____
Micheal George, Chairman

EJCDC
ENGINEERS JOINT CONTRACT DOCUMENTS COMMITTEE

Contractor's Application for Payment No. 01

	Application Period: Jul-25	Application Date: 8/6/2025
To (Owner): CHARLES TOWN UTILITY BOARD	From (Contractor): Snyder Environmental Services	Via (Engineer): GWIN, DOBSON, & FOREMAN, INC.
Project: WATER TREATMENT PLANT CHLORINE GAS SYSTEM MODIFICATION	Contract:	
Owner's Contract No.:	Contractor's Project No.: 25C045	Engineer's Project No.: 21060

Application For Payment

Change Order Summary

Approved Change Orders

Number	Additions	Deductions
CO0001		$30,910.00
TOTALS		$30,910.00
NET CHANGE BY CHANGE ORDERS	-$30,910.00	

1.	ORIGINAL CONTRACT PRICE	$	388,620.00
2.	Net change by Change Orders	$	(30,910.00)
3.	Current Contract Price (Line 1 ± 2)	$	357,710.00
4.	TOTAL COMPLETED AND STORED TO DATE (Column F total on Progress Estimates)	$	17,650.00
5.	RETAINAGE:		
	a. 10% $17,650.00 Work Completed	$	1,765.00
	b. 10% Stored Material	$	-
	c. Total Retainage (Line 5.a + Line 5.b)	$	1,765.00
6.	AMOUNT ELIGIBLE TO DATE (Line 4 - Line 5.c)	$	15,885.00
7.	LESS PREVIOUS PAYMENTS (Line 6 from prior Application)	$	-
8.	AMOUNT DUE THIS APPLICATION	$	15,885.00
9.	BALANCE TO FINISH, PLUS RETAINAGE (Column G total on Progress Estimates + Line 5.c above)	$	341,825.00

Contractor's Certification

The undersigned Contractor certifies, to the best of its knowledge, the following:
(1) All previous progress payments received from Owner on account of Work done under the Contract have been applied on account to discharge Contractor's legitimate obligations incurred in connection with the Work covered by prior Applications for Payment;
(2) Title to all Work, materials and equipment incorporated in said Work, or otherwise listed in or covered by this Application for Payment, will pass to Owner at time of payment free and clear of all Liens, security interests, and encumbrances (except such as are covered by a bond acceptable to Owner indemnifying Owner against any such Liens, security interest, or encumbrances); and
(3) All the Work covered by this Application for Payment is in accordance with the Contract Documents and is not defective.

Contractor Signature

By: Lisa Miller Date: 8/06/2025

Payment of: $ 15,885.00
(Line 8 or other - attach explanation of the other amount)

is recommended by: Christopher M. Echard 8-8-2025
(Engineer) (Date)

Payment of: $ 15,885.00
(Line 8 or other - attach explanation of the other amount)

is approved by: _____
(Owner) (Date)

Approved by: _____
Funding or Financing Entity (if applicable) (Date)

© 2013 National Society of Professional Engineers for EJCDC. All rights reserved.

Progress Estimate - Unit Price Work

Contractor's Application

For (Contract):	WATER TREATMENT PLANT CHLORINE GAS SYSTEM MODIFICATION										Application Number:	01		
Application Period:	Jul-25										Application Date:	8/6/2025		
Contract Information							Work Completed							
A						B	C		D		E	F		G
Bid Item Code	Client Code	Description	Item Quantity	Units	Unit Price	Scheduled Value ($)	Quantity Installed this Period	Value of Work Installed This Period	Quantity Installed to Date	Value of Work Installed to Date	Materials PresentlyStored (not in C or D)	Total Completed and Stored to Date (D + E)	% (F / B)	Balance to Finish (B - F)
100100		MOBILIZATION/DEMOBILIZATION	1	LS	$18,200.00	$ 18,200.00	0.50	$ 9,100.00	0.50	$ 9,100.00		$ 9,100.00	50%	$ 9,100.00
200200		DEMOLITION	1	LS	$16,500.00	$ 16,500.00	0	$ -	0	$ -		$ -		$ 16,500.00
300000		HVAC	1	LS	$33,975.00	$ 33,975.00	0	$ -	0	$ -		$ -		$ 33,975.00
300100		DOORS/WINDOW	1	LS	$51,825.00	$ 51,825.00	0	$ -	0	$ -		$ -		$ 51,825.00
400000		SANDBLASTING	1	LS	$8,550.00	$ 8,550.00	1.00	$ 8,550.00	1.00	$ 8,550.00		$ 8,550.00	100%	$ -
400100		PAINTING	1	LS	$10,550.00	$ 10,550.00	0	$ -	0	$ -		$ -		$ 10,550.00
500000		CHLORINE GAS SYSTEM	1	LS	$130,300.00	$ 130,300.00	0	$ -	0	$ -		$ -		$ 130,300.00
600000		ELECTRICAL	1	LS	$87,810.00	$ 87,810.00	0	$ -	0	$ -		$ -		$ 87,810.00
600100		TROLLY	1	LS	$30,910.00	$ 30,910.00	1.00	$ 30,910.00	1.00	$ 30,910.00		$ 30,910.00	100%	$ -
CO0001		REMOVE TROLLY FROM PROJECT	1	LS	($30,910.00)	$ (30,910.00)	1.00	$ (30,910.00)	1.00	$ (30,910.00)		$ (30,910.00)	100%	$ -
						$ -	0	$ -	0	$ -		$ -		$ -
						$ -	0	$ -	0	$ -		$ -		$ -
						$ -				$ -		$ -		
		Totals				$ 357,710.00		$ 17,650.00		$ 17,650.00		$ 17,650.00		$ 340,060.00

© 2013 National Society of Professional Engineers for EJCDC. All rights reserved.

Stored Material Summary

Contractor's Application

For (Contract):		WATER TREATMENT PLANT CHLORINE GAS SYSTEM MODIFICATION							Application Number:				01
Application Period:		Jul-25							Application Date:				8/6/2025
A	B	C		D		E					F		G
				Stored Previously									
Bid Item No.	Supplier Invoice No.	Storage Location	Description of Materials or Equipment Stored	Date Placed into Storage (Month/Year)	Amount ($)	Amount Stored this Month ($)	Stored Units Quantity	Stored Units Units	Subtotal Amount Stored to Date (D + E)		Incorporated in Work	% Stored	Materials Remaining in Storage ($) (D + E - F)
100100			MOBILIZATION/DEMOBILIZATION				1.00	LS			0.50	50%	
200200			DEMOLITION				1.00	LS			0	100%	
300000			HVAC				1.00	LS			0	100%	
300100			DOORS/WINDOW				1.00	LS			0	100%	
400000			SANDBLASTING				1.00	LS			1.00		
400100			PAINTING				1.00	LS			0	100%	
500000			CHLORINE GAS SYSTEM				1.00	LS			0	100%	
600000			ELECTRICAL				1.00	LS			0	100%	
600100			TROLLY				1.00	LS			1.00		
CO0001			REMOVE TROLLY FROM PROJECT				1.00	LS			1.00		
											0	0	
											0	0	
			TOTALS										

© 2013 National Society of Professional Engineers for EJCDC. All rights reserved.

Date: August 27, 2025

Charles Town Utility Board
Water Treatment Plant - Chlorine Room Modifications
Schedule B - Internal Purposes Only

A. COST OF PROJECT	ESTIMATED CONSTRUCTION BUDGET	Paid from CTUB Internal Funds	Resolution No. 1 Contractor's Application for Payment No. 01	BALANCE REMAINING
1 **CONSTRUCTION**				
a. Contract	$ 357,710.00	$ -	$ 15,885.00	$ 341,825.00
b. Construction Contingency (5%)	$ 17,885.50	$ -	$ -	$ 17,885.50
2 **ENGINEERING SERVICES**				
a. GDF Engineering - Design	$ 19,400.00	$ 17,138.70	$ -	$ 2,261.30
b. GDF Engineering - Construction & Start-up	$ 24,500.00	$ 9,966.33	$ -	$ 14,533.67
3 **ADMINISTRATIVE SERVICES**				
a. Permits	$ 2,000.00	$ 300.00	$ -	$ 1,700.00
b. Other Administrative Costs	$ 1,500.00	$ -	$ -	$ 1,500.00
4 **Total Project Costs Line 1-3**	**$ 422,995.50**	**$ 27,405.03**	**$ 15,885.00**	**$ 379,705.47**

B. SOURCES OF FUNDS	APPROVED PROJECT FUNDING	Paid from CTUB Internal Funds	Contractor's Application for Payment No. 01	BALANCE REMAINING
1 INTERNAL FUNDS				
a. Internal Funds (Operating/Renewal & Replacement Fund)	$ 422,995.50	$ (27,405.03)	$ (15,885.00)	$ 379,705.47
1 Total Sources of Funds	**$ 422,995.50**	**$ (27,405.03)**	**$ (15,885.00)**	**$ 379,705.47**

CHARLES TOWN UTILITY BOARD

Wednesday, August 27, 2025

Regular Meeting **661 South George Street**
Charles Town, WV 25414

Collection System Project - Resolution No. 14 - CIF Payment No. 9

Attachments:

Resolution No. 14 - CIF No. 9.pdf

CHARLES TOWN UTILITY BOARD
2022 COLLECTION SYSTEM PROJECT
(IJDC #2021S-2041 / CWSRF #C-544686)

RESOLUTION NO. 14
REQUEST FOR PAYMENT #14
(CIF PAYMENT #9)

RESOLUTION OF THE CHARLES TOWN UTILITY BOARD APPROVING INVOICES RELATING TO CONSTRUCTION AND OTHER SERVICES FOR THE SEWER PROJECT AND AUTHORIZING PAYMENT THEREOF,

WHEREAS, the Charles Town Utility Board (CTUB), has reviewed the invoices attached hereto and incorporated herein by reference relation to the Project funded in part by the Clean Water State Revolving Fund (CWSRF) and find as follows:

a.) That none of the items for which payment is proposed to be made has formed the basis for any disbursement theretofore made;

b.) Each item for which the payment is proposed to be paid is or was necessary in connection with the Project and constitutes a Cost of the project;

c.) Each of such costs has been otherwise properly incurred; and

d.) Payment for each of the items proposed is due and owing.

NOW, THEREFORE, BE IT RESOLVED by the Charles Town Utility Board that the payment of the invoices as summarized below are hereby authorized and directed:

Vendor	CWSRF	Capacity Improvement Fee (CIF) Fund	Total Approved for Payment
GD&F Engineers	$0	$35,677.65	$35,677.65
Kay, Casto, & Chaney	$0	$2,957.50	$2,957.50
The Cincinnati Insurance Co.	$0	$1,000.00	$1,000.00
Piedmont Design Group	$0	$2,141.37	$2,141.37
WV DEP	$0	$550.00	$550.00
Total	**$0**	**$42,326.52**	**$42,326.52**

ADOPTED BY the City of Charles Town Utility Board, at the meeting held on the 27th day of August, 2025.

By: _____
Micheal George, Chairman

Date: August 27, 2025

Charles Town Utility Board
2022 Sewer Collection System Project
Schedule B - Internal Purposes Only

A. COST OF PROJECT	APPROVED CONSTRUCTION BUDGET	Resolution No. 8 Request for Payment (RFP) # 8 CWSRF # 2	Resolution No. 9 Request for Payment (RFP) # 9 CWSRF # 3	Resolution No. 10 Request for Payment (RFP) # 10 CIF # 7	Resolution No. 11 Request for Payment (RFP) #11 CWSRF # 4	Resolution No. 12 Request for Payment (RFP) #12 CWSRF # 5	Resolution No. 13 Request for Payment (RFP) # 13 CIF # 8	Resolution No. 14 Request for Payment (RFP) # 14 CIF # 9	BALANCE REMAINING
1 **CONSTRUCTION**									
a. Contract	$ 6,074,000.00	$ 148,131.00	$ 48,555.00	$ -	$ 21,600.00	$ 506,828.03	$ -	$ -	$ 5,348,885.97
2 **CONSTRUCTION CONTINGENCY**									
a. Construction Contingency - (Note #1)	$ 303,684.00	$ -	$ -	$ -	$ -	$ -	$ -	$ -	$ 303,684.00
b. B&O Tax Contingency (Note #3)	$ 121,480.00	$ -	$ -	$ -	$ -	$ -	$ -	$ -	$ 121,480.00
3 **LEGAL SERVICES**									
a. Project Attorney - (Note #4)	$ 170,000.00	$ -	$ -	$ 812.50	$ -	$ -	$ -	$ 2,957.50	$ 20,696.41
4 **ACCOUNTING SERVICES**									
a. Project Account - CPA	$ 30,000.00	$ -	$ -	$ -	$ -	$ -	$ -	$ -	$ 7,787.50
5 **ENGINEERING SERVICES**									
a. RK&K Engineering fees	$ 596,090.00	$ -	$ -	$ -	$ -	$ -	$ -	$ -	$ 3,670.19
b. GDF Engineering (Construction Admin & RPR)	$ 300,000.00	$ -	$ -	$ 24,305.25	$ -	$ -	$ 32,559.03	$ 35,677.65	$ 143,865.53
6 **ADMINISTRATIVE SERVICES**									
a. Other Administrative Costs	$ 8,850.00	$ -	$ -	$ -	$ -	$ -	$ -	$ -	$ 3,472.86
7 **LANDS/EASEMENTS**									
a. Easements	$ 50,600.00	$ -	$ -	$ -	$ -	$ -	$ -	$ -	$ 3,275.00
b. R/W Agent - (Note #2)	$ 100,690.72	$ -	$ -	$ -	$ -	$ -	$ -	$ -	$ -
c. Permits - (Note #2)	$ 6,859.28	$ -	$ -	$ 1,170.00	$ -	$ -	$ -	$ 1,550.00	$ 3,139.28
d. Plats - (Note #2)	$ 14,120.00	$ -	$ -	$ -	$ -	$ -	$ -	$ 2,141.37	$ 79.63
8 Sub Total Line 1-7	**$ 7,776,374.00**	**$ 148,131.00**	**$ 48,555.00**	**$ 26,287.75**	**$ 21,600.00**	**$ 506,828.03**	**$ 32,559.03**	**$ 42,326.52**	**$ 5,960,036.37**
B. COST OF FINANCING									
9 Registrar Fees	$ 650.00	$ -	$ -	$ -	$ -	$ -	$ -	$ -	$ -
10 Bond Counsel (S&J)	$ 40,000.00	$ -	$ -	$ -	$ -	$ -	$ -	$ -	$ -
11 Sub Total of Financing - Line 9-10	**$ 40,650.00**	**$ -**	**$ -**	**$ -**	**$ -**				**$ -**
12 Total Project Costs Line 8 + Line 11	**$ 7,817,024.00**	**$ 148,131.00**	**$ 48,555.00**	**$ 26,287.75**	**$ 21,600.00**	**$ 506,828.03**	**$ 32,559.03**	**$ 42,326.52**	**$ 5,960,036.37**

B. SOURCES OF FUNDS	APPROVED PROJECT FUNDING	Request for Payment (RFP) # 8 CWSRF # 2	Request for Payment (RFP) # 9 CWSRF # 3	Request for Payment (RFP) # 10 CIF # 7	Request for Payment (RFP) #11 CWSRF # 4	Request for Payment (RFP) #12 CWSRF # 5	Request for Payment (RFP) # 13 CIF # 8	Request for Payment (RFP) # 14 CIF # 9	BALANCE REMAINING
1 INTERNAL FUNDS									
a. Capacity Improvement Fees	$ 3,057,560.00	$ -	$ -	$ (26,287.75)	$ -	$ -	$ (32,559.03)	$ (42,326.52)	$ 1,966,336.40
b. CTUB Operating Fund	$ 121,480.00	$ -	$ -	$ -	$ -	$ -	$ -	$ -	$ 121,480.00
1 Subtotal Internal Funds	**$ 3,179,040.00**	**$ -**	**$ -**	**$ (26,287.75)**	**$ -**	**$ -**	**$ (32,559.03)**	**$ (42,326.52)**	**$ 2,087,816.40**
2 GRANT FUNDS									
a. State Grant (EEGF)	$ 1,077,000.00	$ -	$ -	$ -	$ -	$ -	$ -	$ -	$ 1,077,000.00
b. Federal Grant (CWSRF) - "Green Grant"	$ 500,000.00	$ -	$ -	$ -	$ -	$ -	$ -	$ -	$ 500,000.00
2 Subtotal Grant Funds	**$ 1,577,000.00**	**$ -**	**$ -**	**$ -**	**$ -**	**$ -**	**$ -**	**$ -**	**$ 1,577,000.00**
3 BOND ISSUE									
a. CWSRF Loan - (1%, 40 Year)	$ 2,844,984.00	$ (148,131.00)	$ (48,555.00)	$ -	$ (21,600.00)	$ (506,828.03)	$ -	$ -	$ 2,079,219.97
b. CWSRF Loan - (3%, 20 Year)	$ 216,000.00	$ -	$ -	$ -	$ -	$ -	$ -	$ -	$ 216,000.00
3 Subtotal Bond Issue	**$ 3,060,984.00**	**$ (148,131.00)**	**$ (48,555.00)**	**$ -**	**$ (21,600.00)**	**$ (506,828.03)**	**$ -**	**$ -**	**$ 2,295,219.97**
4 Total Sources of Funds Line 1-3	**$ 7,817,024.00**	**$ (148,131.00)**	**$ (48,555.00)**	**$ (26,287.75)**	**$ (21,600.00)**	**$ (506,828.03)**	**$ (32,559.03)**	**$ (42,326.52)**	**$ 5,960,036.37**

Note #1 - 12/10/2024 - The CWSRF loan in the amount of $216,016 was shown as $216,000 on the closing documentation. Per the State, the CWSRF loan and the total project costs line items on the Schedule B were reduced by $16.00 to correct the error.

Note #2 - 12/11/2024 - Line item R/W Agent was decreased by $1,444.28 to actual, line item Permits was decreased by $140.72, and the line item for Plats was increased by $1,585.00.

Note #3 - 6/11/2025 - Change Order No. 1 - Upon the denial of the B&O waiver request by the City of Charles Town and the City of Ranson, the CTUB Board approved the payment of the B&O taxes to both municipalities to be paid from internal funds.

Note #4 - 6/25/2025 - Amendment No. 2 was approved to increase project legal services by $30,000, not to exceed $170,000.

Note #5 -8/5/2025 - Line item Admin Costs was decreased by $1,150 and the line item for Plats was increased by $1,150.

CHARLES TOWN UTILITY BOARD

Wednesday, August 27, 2025

Regular Meeting **661 South George Street**
Charles Town, WV 25414

Collection System Project - Resolution No. 15 - CWSRF No. 6, Pay Application No. 5

Attachments:

Resolution No. 15 - CWSRF No. 6, Pay App 5.pdf

CHARLES TOWN UTILITY BOARD
2022 COLLECTION SYSTEM PROJECT
(IJDC #2021S-2041 / CWSRF #C-544686)

RESOLUTION NO. 15
REQUEST FOR PAYMENT #15
(CWSRF #C-544686 PAYMENT #6)

RESOLUTION OF THE CHARLES TOWN UTILITY BOARD APPROVING INVOICES RELATING TO CONSTRUCTION AND OTHER SERVICES FOR THE SEWER PROJECT AND AUTHORIZING PAYMENT THEREOF,

WHEREAS, the Charles Town Utility Board (CTUB), has reviewed the invoices attached hereto and incorporated herein by reference relation to the Project funded in part by the Clean Water State Revolving Fund (CWSRF) and find as follows:

a.) That none of the items for which payment is proposed to be made has formed the basis for any disbursement theretofore made;

b.) Each item for which the payment is proposed to be paid is or was necessary in connection with the Project and constitutes a Cost of the project;

c.) Each of such costs has been otherwise properly incurred; and

d.) Payment for each of the items proposed is due and owing.

NOW, THEREFORE, BE IT RESOLVED by the Charles Town Utility Board as follows: There is hereby authorized and directed the payment of **"Contractor's Payment Application No. 05"** as follows.

Vendor	CWSRF	Capacity Improvement Fee (CIF) Fund	Total Approved for Payment
HRI, Inc.	$620,946.92	$0	$620,946.92
Total	**$620,946.92**	**$0**	**$620,946.92**

ADOPTED BY the City of Charles Town Utility Board, at the meeting held on the 27th day of August, 2025.

By: _____
Micheal George, Chairman

SRF PAYMENT REQUISITION FORM

1. LOAN RECIPIENT/VENDOR:

NAME: Charles Town Utility Board

ADDRESS: 101 E Washington St
Charles Town, WV 25414

FEIN: 32-0280357

DUNS: 010728588

UEI: GXZTJN971WA5

2. INVOICE #: C-544686-2025-05

3. REQUEST NUMBER: 6

4. INVOICE PERIOD COVERED BY THIS REQUEST

FROM: 7/1/2025 TO: 8/14/2025

5. % of PHYSICAL CONSTRUCTION COMPLETION 22.16%

CLASSIFICATION	A) APPROVED BUDGET	B) PREVIOUS APPROVED	C) THIS REQUEST	D) TOTAL COLUMNS B&C	E) AGENCY USE ONLY LOAN $	E) AGENCY USE ONLY PF $
1) CONSTRUCTION	$3,000,650.00	$725,114.03	$620,946.92	$1,346,060.95		
2) CONTINGENCY	$303,684.00			$0.00		
3) EQUIPMENT				$0.00		
4) ENGINEERING a. Planning				$0.00		
b. Design				$0.00		
c. Construction Basic				$0.00		
d. RPR / Inspection				$0.00		
e. Post Construction				$0.00		
f. Special Services				$0.00		
5) LEGAL				$0.00		
6) ACCOUNTING				$0.00		
7) ADMINISTRATIVE				$0.00		
8) PERMITS				$0.00		
9) LOAN REPAYMENT				$0.00		
10) PLATS				$0.00		
11) LAND/EASEMENTS				$0.00		
12) (space as needed)				$0.00		
13) CLOSING COSTS	$40,650.00	$40,650.00		$40,650.00		
14) SUBTOTAL	$3,344,984.00	$765,764.03	$620,946.92	$1,386,710.95		
15) LESS PREVIOUSLY PAID				$765,764.03		
16) REQUEST AMOUNT				$620,946.92		

17) _____ _____
AUTHORIZED SIGNATURE DATE
Micheal George, Chairman
TYPED OR PRINTED NAME AND TITLE

18) _____ _____
PERSON PREPARING FORM SIGNATURE DATE
April Shultz, Assistant Utility Manager
TYPED OR PRINTED NAME AND TITLE

AGENCY USE ONLY:

THIS REQUEST APPROVED BY: **WV DEPARTMENT OF ENVIRONMENTAL PROTECTION**

_____ _____
PROJECT REVIEWER DATE
TYPED OR PRINTED NAME

_____ _____
AUTHORIZED OFFICER DATE
TYPED OR PRINTED NAME

EJCDC
ENGINEERS JOINT CONTRACT DOCUMENTS COMMITTEE

Contractor's Application for Payment No. 05

	Application Period: 7/1/25-7/31/25	Application Date:	8/14/2025
To (Owner): Charles Town Utility Board	From (Contractor): HRI, Inc.	Via (Engineer):	Rummel, Klepper & Kahl, LLP
Project: 2022 Collection System Project	Contract: 01	Via (Consultant):	Gwin, Dobson & Foreman Engineers
Owner's Contract No.:	Contractor's Project No.: 10341291	Engineer's Project No.:	24054

Application For Payment

Change Order Summary

Approved Change Orders

Number	Additions	Deductions
1	$121,480.00	
TOTALS	$121,480.00	
NET CHANGE BY CHANGE ORDERS	**$121,480.00**	

1.	**ORIGINAL CONTRACT PRICE**	$	**$6,074,000.00**
2.	**Net change by Change Orders**	$	**$121,480.00**
3.	**Current Contract Price (Line 1 ± 2)**	$	**$6,195,480.00**
4.	**TOTAL COMPLETED AND STORED TO DATE (Column F total on Progress Estimates)**	$	**$1,495,623.28**
5.	**RETAINAGE:**		
	a. 10% X $1,150,789.21 **Work Completed**	$	**$115,078.92**
	b. 10% X $344,834.07 **Stored Material**	$	**$34,483.41**
	c. **Total Retainage (Line 5.a + Line 5.b)**	$	**$149,562.33**
6.	**AMOUNT ELIGIBLE TO DATE (Line 4 - Line 5.c)**	$	**$1,346,060.95**
7.	**LESS PREVIOUS PAYMENTS (Line 6 from prior Application)**	$	**$725,114.03**
8.	**AMOUNT DUE THIS APPLICATION**	$	**$620,946.92**
9.	**BALANCE TO FINISH, PLUS RETAINAGE (Column G total on Progress Estimates + Line 5.c above)**	$	**$4,849,419.05**

Contractor's Certification

The undersigned Contractor certifies, to the best of its knowledge, the following:
(1) All previous progress payments received from Owner on account of Work done under the Contract have been applied on account to discharge Contractor's legitimate obligations incurred in connection with the Work covered by prior Applications for Payment;
(2) Title to all Work, materials and equipment incorporated in said Work, or otherwise listed in or covered by this Application for Payment, will pass to Owner at time of payment free and clear of all Liens, security interests, and encumbrances (except such as are covered by a bond acceptable to Owner indemnifying Owner against any such Liens, security interest, or encumbrances); and
(3) All the Work covered by this Application for Payment is in accordance with the Contract Documents and is not defective.

Contractor Signature

By: Josh Kutz	Date: 8/14/2025

Payment of: $ 620,946.92
(Line 8 or other - attach explanation of the other amount)

is recommended by: David Santelli (Engineer) 8/15/2025 (Date)

Payment of: $
(Line 8 or other - attach explanation of the other amount)

is approved by: (Owner) (Date)

Approved by: Funding or Financing Entity (if applicable) (Date)

© 2013 National Society of Professional Engineers for EJCDC. All rights reserved.

C2 - COLAS GROUP INTERNAL: Employees and partners who nee

Progress Estimate - Unit Price Work **Contractor's Application**

For (Contract): 01												Application Number: 05			
Application Period: 7/1/25-7/31/25												Application Date: 8/14/2025			
A					B			C			D	E	F		
Item		Contract Information				Quantity			Payment						
Bid Item No.	Description	Bid Quantity	Units	Unit Price	Total Value of Item ($)	This Period	Previous to Date	To Date	This Period	Previous to Date	To Date	Materials Presently Stored (not in C)	Total Completed and Stored to Date (D+E)	% (F / B)	Balance to Finish (B - F)
1	Mobilization	1	LS	$272,980.00	$272,980.00		**0.96**	0.96		$262,060.80	$262,060.80		$262,060.80	96.0%	$10,919.20
2	Traffic Control	1	LS	$15,000.00	$15,000.00	**0.20**	**0.20**	0.40	$3,000.00	$3,000.00	$6,000.00		$6,000.00	40.0%	$9,000.00
3	Audio Visual Taping	1	LS	$5,200.00	$5,200.00		**1.00**	1.00		$5,200.00	$5,200.00		$5,200.00	100.0%	
4	**Erosion & Sediment Control**	**1**	**LS**	**$142,000.00**											
4a	Rock Construction Entrance	1	LS	$35,000.00	$35,000.00	**0.40**		0.40	$14,000.00		$14,000.00		$14,000.00	40.0%	$21,000.00
4b	18" Silt Fence - 11th & Forest	1	LS	$12,000.00	$12,000.00										$12,000.00
4c	36" Silt Fence - Evitt's Run	1	LS	$16,000.00	$16,000.00	**1.00**		1.00	$16,000.00		$16,000.00		$16,000.00	100.0%	
4d	18" Silt Sock - Jett's Farm FM	1	LS	$14,000.00	$14,000.00		**1.00**	1.00		$14,000.00	$14,000.00		$14,000.00	100.0%	
4e	18" Silt Sock - 11th & Forest	1	LS	$12,000.00	$12,000.00										$12,000.00
4f	18" Silt Sock - Evitts Run	1	LS	$5,000.00	$5,000.00	**1.00**		1.00	$5,000.00		$5,000.00		$5,000.00	100.0%	
4g	Super Silt Fence - Evitt's Run	1	LS	$30,000.00	$30,000.00	**1.00**		1.00	$30,000.00		$30,000.00		$30,000.00	100.0%	
4h	18" Silt Sock - Burr East FM	1	LS	$8,000.00	$8,000.00										$8,000.00
4i	Silt Sacks	1	LS	$3,000.00	$3,000.00	**0.25**	**0.25**	0.50	$750.00	$750.00	$1,500.00		$1,500.00	50.0%	$1,500.00
4j	Sediment Bags	1	LS	$7,000.00	$7,000.00	**0.25**	**0.25**	0.50	$1,750.00	$1,750.00	$3,500.00		$3,500.00	50.0%	$3,500.00
5	**Burr East Pump Station Demolition**	**1**	**LS**	**$22,000.00**											
5a	Demo Existing Valve Vault	1	LS	$5,000.00	$5,000.00										$5,000.00
5b	Remove Existing Pumps & Piping	1	LS	$9,000.00	$9,000.00										$9,000.00
5c	Remove Existing Fencing	1	LS	$4,000.00	$4,000.00										$4,000.00
5d	Demo Concrete Pad	1	LS	$3,000.00	$3,000.00										$3,000.00
5e	Relocate Propane Tanks	1	LS	$1,000.00	$1,000.00										$1,000.00
6	**Moose Lodge Pump Station Demolition**	**1**	**LS**	**$22,000.00**											
6a	Demo Wet Well Top	1	LS	$4,500.00	$4,500.00										$4,500.00
6b	Remove Existing Pumps & Piping	1	LS	$8,500.00	$8,500.00										$8,500.00
6c	Demo 6" Yard Piping	1	LS	$5,000.00	$5,000.00										$5,000.00
6d	Demo Transfer Switch / Control Panel	1	LS	$2,000.00	$2,000.00										$2,000.00
6e	Remove Existng Grout Fillet	1	LS	$2,000.00	$2,000.00										$2,000.00
7	**Jetts Farm Pump Station Demolition**	**1**	**LS**	**$22,000.00**											
7a	Demo Junction Box / Vent	1	LS	$5,500.00	$5,500.00										$5,500.00
7b	Remove Existing Pumps & Piping	1	LS	$9,500.00	$9,500.00										$9,500.00
7c	Demo 6" Yard Piping	1	LS	$5,000.00	$5,000.00										$5,000.00
7d	Demo Transfer Switch / Control Panel	1	LS	$2,000.00	$2,000.00										$2,000.00
9	**Forrest Street Pump Station Demolition**	**1**	**LS**	**$33,000.00**											
9a	Demo Pump Station	1	LS	$15,000.00	$15,000.00										$15,000.00
9b	Remove Existing Pumps & Piping	1	LS	$9,000.00	$9,000.00										$9,000.00
9c	Demo 10"/12" Piping	1	LS	$9,000.00	$9,000.00										$9,000.00
10	**11th Ave Pump Station Demolition**	**1**	**LS**	**$33,000.00**											
10a	Demo Pump Station	1	LS	$14,000.00	$14,000.00										$14,000.00
10b	Remove Existing Pumps & Piping	1	LS	$10,000.00	$10,000.00										$10,000.00
10c	Demo 8"/2" Piping	1	LS	$9,000.00	$9,000.00										$9,000.00
11	**Burr East Pump Station**	**1**	**LS**	**$495,000.00**											
11a	Erosion & Sediment Control	1	LS	$6,000.00	$6,000.00										$6,000.00
11b	Seeding and Lanscaping	1	LS	$4,000.00	$4,000.00										$4,000.00
11c	Site Fencing	1	LS	$8,000.00	$8,000.00										$8,000.00
11d	Valve Vault	1	LS	$40,000.00	$40,000.00										$40,000.00
11e	Meter Vault	1	LS	$25,000.00	$25,000.00										$25,000.00
11f	Process Pipe	1	LS	$70,000.00	$70,000.00										$70,000.00
11g	Submersible Pumps	1	LS	$98,000.00	$98,000.00		**0.10**	0.10		$9,800.00	$9,800.00	$69,082.65	$78,882.65	80.5%	$19,117.35
11h	Pipe Painting	1	LS	$4,000.00	$4,000.00										$4,000.00
11i	Instrumentation	1	LS	$15,000.00	$15,000.00		**0.10**	0.10		$1,500.00	$1,500.00		$1,500.00	10.0%	$13,500.00
11j	Propane Tank Pad	1	LS	$5,000.00	$5,000.00										$5,000.00
11k	Wet Well Top Slab	1	LS	$15,000.00	$15,000.00										$15,000.00
11l	Wet Well Fillet	1	LS	$5,000.00	$5,000.00										$5,000.00
11m	Electrical Enclosure Pad	1	LS	$5,000.00	$5,000.00										$5,000.00
11n	Electrical	1	LS	$90,000.00	$90,000.00										$90,000.00
11o	Integration	1	LS	$105,000.00	$105,000.00		**0.10**	0.10		$10,500.00	$10,500.00		$10,500.00	10.0%	$94,500.00
12	**Moose Lodge Pump Station**	**1**	**LS**	**$305,000.00**											
12a	Erosion & Sediment Control	1	LS	$4,000.00	$4,000.00										$4,000.00
12b	Seeding and Lanscaping	1	LS	$4,000.00	$4,000.00										$4,000.00
12c	Meter Vault	1	LS	$16,000.00	$16,000.00										$16,000.00
12d	Bypass Pit	1	LS	$6,000.00	$6,000.00										$6,000.00
12e	Process Pipe	1	LS	$54,000.00	$54,000.00										$54,000.00

© 2013 National Society of Professional Engineers for EJCDC. All rights reserved.

C2 - COLAS GROUP INTERNAL: Employees and partners who nee

Progress Estimate - Unit Price Work **Contractor's Application**

For (Contract): 01		Application Number: 05
Application Period: 7/1/25-7/31/25		Application Date: 8/14/2025

A					B			C			D	E	F		
Item		Contract Information				Quantity			Payment						
Bid Item No.	Description	Bid Quantity	Units	Unit Price	Total Value of Item ($)	This Period	Previous to Date	To Date	This Period	Previous to Date	To Date	Materials Presently Stored (not in C)	Total Completed and Stored to Date (D+E)	% (F / B)	Balance to Finish (B - F)
12f	Submersible Pumps	1	LS	$90,000.00	$90,000.00		**0.10**	0.10		$9,000.00	$9,000.00	$73,305.00	$82,305.00	91.5%	$7,695.00
12g	Instrumentation	1	LS	$6,000.00	$6,000.00										$6,000.00
12h	Wet Well Top Slab	1	LS	$15,000.00	$15,000.00										$15,000.00
12i	Electrical	1	LS	$65,000.00	$65,000.00										$65,000.00
12j	Integration	1	LS	$45,000.00	$45,000.00										$45,000.00
13	**Jetts Farm Pump Station**	**1**	**LS**	**$335,000.00**											
13a	Erosion & Sediment Control	1	LS	$4,000.00	$4,000.00										$4,000.00
13b	Temporary Fence & Barrier	1	LS	$23,000.00	$23,000.00										$23,000.00
13c	Seeding & Landscaping	1	LS	$3,500.00	$3,500.00										$3,500.00
13d	Meter Vault	1	LS	$16,000.00	$16,000.00										$16,000.00
13e	Bypass Pit	1	LS	$6,000.00	$6,000.00										$6,000.00
13f	Process Pipe	1	LS	$73,500.00	$73,500.00										$73,500.00
13g	Submersible Pumps	1	LS	$102,000.00	$102,000.00		**0.10**	0.10		$10,200.00	$10,200.00	$62,111.25	$72,311.25	70.9%	$29,688.75
13h	Instrumentation	1	LS	$4,500.00	$4,500.00		**0.10**	0.10		$450.00	$450.00		$450.00	10.0%	$4,050.00
13i	Pipe Painting	1	LS	$1,500.00	$1,500.00										$1,500.00
13j	Electrical	1	LS	$58,000.00	$58,000.00										$58,000.00
13k	Integration	1	LS	$43,000.00	$43,000.00		**0.10**	0.10		$4,300.00	$4,300.00		$4,300.00	10.0%	$38,700.00
15	**Lakeland Pump Station**	**1**	**LS**	**$1,125,000.00**											
15a	Erosion & Sediment Control	1	LS	$8,000.00	$8,000.00										$8,000.00
15b	Strip / Spread Topsoil	1	LS	$7,000.00	$7,000.00										$7,000.00
15c	Site Grading	1	LS	$23,000.00	$23,000.00										$23,000.00
15d	Construction Entrance / Site Road	1	LS	$16,000.00	$16,000.00										$16,000.00
15e	Clearing & Grubbing	1	LS	$9,500.00	$9,500.00										$9,500.00
15f	Seeding & Landscaping	1	LS	$4,000.00	$4,000.00										$4,000.00
15g	Site Fencing	1	LS	$20,000.00	$20,000.00										$20,000.00
15h	Pump Station Wet Well Shoring / Excavation / Backfill	1	LS	$530,000.00	$530,000.00		**0.09**	0.09		$47,700.00	$47,700.00		$47,700.00	9.0%	$482,300.00
15i	Meter Vault	1	LS	$20,000.00	$20,000.00										$20,000.00
15j	Process Pipe	1	LS	$141,000.00	$141,000.00										$141,000.00
15k	Submersible Pumps	1	LS	$15,000.00	$15,000.00		**0.01**	0.01		$150.00	$150.00		$150.00	1.0%	$14,850.00
15l	Instrumentation	1	LS	$7,000.00	$7,000.00										$7,000.00
15m	Pipe Painting	1	LS	$1,000.00	$1,000.00										$1,000.00
15n	Generator & Electrical Pads	1	LS	$8,500.00	$8,500.00										$8,500.00
15o	Electrical	1	LS	$135,000.00	$135,000.00		**0.10**	0.10		$13,500.00	$13,500.00		$13,500.00	10.0%	$121,500.00
15p	Integration	1	LS	$180,000.00	$180,000.00										$180,000.00
16	Grinder Pump 1	1	LS	$23,000.00	$23,000.00										$23,000.00
17	Grinder Pump 2	1	LS	$23,000.00	$23,000.00										$23,000.00
18	**Bypass Pump - Burr East Pump Station**	**1**	**LS**	**$45,000.00**											
18a	Set Up Bypass Pump & Piping	1	LS	$17,500.00	$17,500.00										$17,500.00
18b	Utilize Bypass Pump & Piping	1	LS	$25,000.00	$25,000.00										$25,000.00
18c	Remove Bypass Pump & Piping	1	LS	$2,500.00	$2,500.00										$2,500.00
19	**Bypass Pump - Jett's Farm Pump Station**	**1**	**LS**	**$36,000.00**											
19a	Set Up Bypass Pump & Piping	1	LS	$13,500.00	$13,500.00										$13,500.00
19b	Utilize Bypass Pump & Piping	1	LS	$20,000.00	$20,000.00										$20,000.00
19c	Remove Bypass Pump & Piping	1	LS	$2,500.00	$2,500.00										$2,500.00
20	**Bypass Pump - Samuel Street Pump Station**	**1**	**LS**	**$15,000.00**											
20a	Set Up Bypass Pump & Piping	1	LS	$5,500.00	$5,500.00	**1.00**		1.00	$5,500.00		$5,500.00		$5,500.00	100.0%	
20b	Utilize Bypass Pump & Piping	1	LS	$7,000.00	$7,000.00	**1.00**		1.00	$7,000.00		$7,000.00		$7,000.00	100.0%	
20c	Remove Bypass Pump & Piping	1	LS	$2,500.00	$2,500.00	**1.00**		1.00	$2,500.00		$2,500.00		$2,500.00	100.0%	
22	**Bypass Pump - Forest Ave Pump Station**	**1**	**LS**	**$13,000.00**											
22a	Set Up Bypass Pump & Piping	1	LS	$5,500.00	$5,500.00										$5,500.00
22b	Utilize Bypass Pump & Piping	1	LS	$5,500.00	$5,500.00										$5,500.00
22c	Remove Bypass Pump & Piping	1	LS	$2,000.00	$2,000.00										$2,000.00
23	**Bypass Pump - 11th Ave Pump Station**	**1**	**LS**	**$13,000.00**											
23a	Set Up Bypass Pump & Piping	1	LS	$5,500.00	$5,500.00										$5,500.00
23b	Utilize Bypass Pump & Piping	1	LS	$5,500.00	$5,500.00										$5,500.00
23c	Remove Bypass Pump & Piping	1	LS	$2,000.00	$2,000.00										$2,000.00
24	**Bypass Pump - Evitt's Run Interceptor**	**1**	**LS**	**$100,000.00**											
24a	Set Up Bypass Pump & Piping (multiple)	1	LS	$25,000.00	$25,000.00	**0.25**		0.25	$6,250.00		$6,250.00		$6,250.00	25.0%	$18,750.00
24b	Utilize Bypass Pump & Piping	1	LS	$50,000.00	$50,000.00	**0.25**		0.25	$12,500.00		$12,500.00		$12,500.00	25.0%	$37,500.00
24c	Remove Bypass Pump & Piping (multiple)	1	LS	$25,000.00	$25,000.00	**0.25**		0.25	$6,250.00		$6,250.00		$6,250.00	25.0%	$18,750.00

EJCDC® C-620 Contractor's Application for Payment
© 2013 National Society of Professional Engineers for EJCDC. All rights reserved.

C2 - COLAS GROUP INTERNAL: Employees and partners who nee

Progress Estimate - Unit Price Work **Contractor's Application**

For (Contract): 01												Application Number: 05			
Application Period: 7/1/25-7/31/25												Application Date: 8/14/2025			
A					B			C			D	E	F		
Item		Contract Information				Quantity			Payment						
Bid Item No.	Description	Bid Quantity	Units	Unit Price	Total Value of Item ($)	This Period	Previous to Date	To Date	This Period	Previous to Date	To Date	Materials Presently Stored (not in C)	Total Completed and Stored to Date (D+E)	% (F / B)	Balance to Finish (B - F)
25	Pump & Haul - Moose Lodge Pump Station	1	LS	$48,000.00	$48,000.00										$48,000.00
26	Pump & Haul - Evitt's Run Interceptor	1	LS	$7,500.00	$7,500.00										$7,500.00
27	Pump & Haul - Magnolia Springs Pump Station	1	LS	$7,500.00	$7,500.00										$7,500.00
28	Pump & Haul - Clearance Drive Pump Station	1	LS	$7,500.00	$7,500.00										$7,500.00
29	4" SDR 35 Sewer	100	LF	$194.00	$19,400.00										$19,400.00
30	6" SDR 35 PVC Sewer (D<8')	20	LF	$92.00	$1,840.00										$1,840.00
31	8" SDR PVC Sewer (D<8')	1100	LF	$135.00	$148,500.00										$148,500.00
32	8" SDR PVC Sewer (8<D<12')	200	LF	$192.00	$38,400.00										$38,400.00
33	8" SDR PVC Sewer (D<12')	200	LF	$284.00	$56,800.00										$56,800.00
34	10" SDR 35 PVC Sewer (D<8')	600	LF	$174.00	$104,400.00										$104,400.00
35	12" SDR PVC	80	LF	$235.00	$18,800.00	**21.00**		21.00	$4,935.00		$4,935.00		$4,935.00	26.3%	$13,865.00
36	30" SDR PVC	2000	LF	$305.00	$610,000.00	**430.75**		430.75	$131,378.75		$131,378.75	$82,405.52	$213,784.27	35.0%	$396,215.73
37	6" C900 Class 165 PVC Force Main	2200	LF	$135.00	$297,000.00	**920.08**	**1390.00**	2310.08	$124,210.80	$187,650.00	$311,860.80		$311,860.80	105.0%	-$14,860.80
38	4" C900 Class 165 PVC Force Main	2800	LF	$115.00	$322,000.00	**1333.50**		1333.50	$153,352.50		$153,352.50		$153,352.50	47.6%	$168,647.50
39	2" SDR 9 HDPE Force Main (Slip Line)	1400	LF	$55.00	$77,000.00										$77,000.00
40	1.5" SDR 9 IPS HDPE Force Main (Slip Line)	900	LF	$54.00	$48,600.00										$48,600.00
41	1.25" SDR 9 IPS HDPE for Main	1200	LF	$75.50	$90,600.00										$90,600.00
42	4' Diameter Manhole (up to 6')	20	EA	$8,500.00	$170,000.00	**1.00**		1.00	$8,500.00		$8,500.00	$57,929.65	$66,429.65	39.1%	$103,570.35
43	4' Diameter Manhole Extension	50	VF	$650.00	$32,500.00										$32,500.00
44	4' Diameter Doghouse Manhole (up to 6')	10	EA	$8,100.00	$81,000.00										$81,000.00
45	Manhole Frame and Cover - Highway	26	EA	$1,500.00	$39,000.00	**1.00**		1.00	$1,500.00		$1,500.00		$1,500.00	3.8%	$37,500.00
46	Manhole Frame and Cover - Watertight	5	EA	$1,700.00	$8,500.00	**2.00**		2.00	$3,400.00		$3,400.00		$3,400.00	40.0%	$5,100.00
47	Inside Drop Connection	10	EA	$1,500.00	$15,000.00	**1.00**		1.00	$1,500.00		$1,500.00		$1,500.00	10.0%	$13,500.00
48	Connect to Existing	10	EA	$2,000.00	$20,000.00	**1.00**		1.00	$2,000.00		$2,000.00		$2,000.00	10.0%	$18,000.00
49	Mainline Cleanout	5	EA	$4,300.00	$21,500.00										$21,500.00
50	Air Release Vacuum Combination Valve Assembly	4	EA	$12,500.00	$50,000.00		**0.75**	0.75		$9,375.00	$9,375.00		$9,375.00	18.8%	$40,625.00
51	Flushing Valve	4	EA	$9,000.00	$36,000.00										$36,000.00
52	Burr East Force Main Connection	1	LS	$21,000.00	$21,000.00										$21,000.00
53	Jett's Farm Force Main Connection	1	LS	$11,000.00	$11,000.00										$11,000.00
54	Manhole Riser Extension	5	VF	$1,300.00	$6,500.00										$6,500.00
55	Internal Manhole Lining	90	VF	$100.00	$9,000.00										$9,000.00
56	6" SDR PVC Lateral	200	LF	$102.00	$20,400.00										$20,400.00
57	Reconnect Lateral Service Connection	16	EA	$1,400.00	$22,400.00										$22,400.00
58	8"x6" Wye	14	EA	$420.00	$5,880.00										$5,880.00
59	12" Steel Casing - (Open Cut)	200	LF	$200.00	$40,000.00										$40,000.00
60	16" Steel Casing - (Open Cut)	80	LF	$250.00	$20,000.00										$20,000.00
61	48" Steel Casing - (Open Cut)	80	LF	$1,600.00	$128,000.00										$128,000.00
62	Test Pit Excavation & Refill	7	EA	$5,000.00	$35,000.00										$35,000.00
63	Launching / Receiving Pit	7	EA	$9,000.00	$63,000.00										$63,000.00
64	Asphalt Trench Patch (Base)	80	TON	$400.00	$32,000.00										$32,000.00
65	Asphalt Trench Patch (Wearing)	60	TON	$350.00	$21,000.00										$21,000.00
66	Aggregate for Backfill	700	CY	$92.00	$64,400.00	**89.00**	**99.33**	188.33	$8,188.00	$9,138.36	$17,326.36		$17,326.36	26.9%	$47,073.64
67	Flowable Fill	50	CY	$400.00	$20,000.00										$20,000.00
68	Remove Manhole	13	EA	$1,300.00	$16,900.00	**1.00**		1.00	$1,300.00		$1,300.00		$1,300.00	7.7%	$15,600.00
69	Concrete Curb Repair	10	LF	$200.00	$2,000.00										$2,000.00
70	Concrete Driveway Repair	10	CY	$1,800.00	$18,000.00										$18,000.00
71	Miscellaneous DIP Fittings	500	LB	$20.00	$10,000.00										$10,000.00
72	Class B Concrete	50	CY	$500.00	$25,000.00										$25,000.00
73	Shoring / Stabalization After Receiving / Launching Pit - Augustine Ave	1	LS	$10,000.00	$10,000.00										$10,000.00
	Change Orders														
CO-1	B&O Tax	1	LS	$121,480.00	$121,480.00										$121,480.00
	Totals				**$6,195,480.00**				**$550,765.05**	**$600,024.16**	**$1,150,789.21**	**$344,834.07**	**$1,495,623.28**	24.1%	**$4,699,856.72**

© 2013 National Society of Professional Engineers for EJCDC. All rights reserved.

C2 - COLAS GROUP INTERNAL: Employees and partners who nee

Stored Material Summary

Contractor's Application

For (Contract):	01	Application Number:	05
Application Period:	7/1/25-7/31/25	Application Date:	8/14/2025

A		B	C		D		E		F		G
					Stored Previously				Incorporated in Work		
Bid Item No.	Supplier Invoice No.	Submittal No. (with Specification Section No.)	Storage Location	Description of Materials or Equipment Stored	Application No. when Materials Placed in Storage	Amount ($)	Amount Stored this Month ($)	Subtotal Amount Completed and Stored to Date (D + E)	Date (Month/ Year)	Amount ($)	Materials Remaining in Storage ($) (D + E - F)
11g	27315		HRI Trailer	Burr East Grinder Pumps	4	$33,390.00		$33,390.00			$33,390.00
11g	28718		HRI Trailer	Burr East Grinder Pumps	4	$35,692.65		$35,692.65			$35,692.65
12f	27317		HRI Trailer	Jetts Farm Grinder Pumps	4	$38,700.00		$38,700.00			$38,700.00
12f	28503		HRI Trailer	Jetts Farm Grinder Pumps	4	$34,605.00		$34,605.00			$34,605.00
13g	27316		HRI Trailer	Moose Lodge Grinder Pumps	4	$33,300.00		$33,300.00			$33,300.00
13g	28504		HRI Trailer	Moose Lodge Grinder Pumps	4	$28,811.25		$28,811.25			$28,811.25
36	x122052		Evitts Run	30" PVC	5		$25,318.44	$25,318.44	7/2025	$25,318.44	
36	x345362		Evitts Run	30" PVC	5		$25,318.44	$25,318.44	7/2025	$18,868.24	$6,450.20
36	x346372		Evitts Run	30" PVC	5		$25,318.44	$25,318.44			$25,318.44
36	x347299		Evitts Run	30" PVC	5		$25,318.44	$25,318.44			$25,318.44
36	x356214		Evitts Run	30" PVC	5		$25,318.44	$25,318.44			$25,318.44
42	886402		Evitts Run	Sanitary MH	5		$5,103.00	$5,103.00			$5,103.00
42	882498		Evitts Run	Sanitary MH	5		$41,139.40	$41,139.40			$41,139.40
42	880503		Evitts Run	Sanitary MH	5		$7,064.25	$7,064.25			$7,064.25
42	876403		Evitts Run	Sanitary MH	5		$4,623.00	$4,623.00			$4,623.00
				Totals		**$204,498.90**	**$184,521.85**	**$389,020.75**		**$44,186.68**	**$344,834.07**

© 2013 National Society of Professional Engineers for EJCDC. All rights reserved.

C2 - COLAS GROUP INTERNAL: Employees and partners who nee

Date: August 27, 2025

Charles Town Utility Board
2022 Sewer Collection System Project
Schedule B - Internal Purposes Only

A. COST OF PROJECT	APPROVED CONSTRUCTION BUDGET	Resolution No. 8 Request for Payment (RFP) # 8 CWSRF # 2	Resolution No. 9 Request for Payment (RFP) # 9 CWSRF # 3	Resolution No. 10 Request for Payment (RFP) # 10 CIF # 7	Resolution No. 11 Request for Payment (RFP) #11 CWSRF # 4	Resolution No. 12 Request for Payment (RFP) #12 CWSRF # 5	Resolution No. 13 Request for Payment (RFP) # 13 CIF # 8	Resolution No. 14 Request for Payment (RFP) # 14 CIF # 9	Resolution No. 15 Request for Payment (RFP) #15 CWSRF # 6	BALANCE REMAINING
1 **CONSTRUCTION**										
a. Contract	$ 6,074,000.00	$ 148,131.00	$ 48,555.00	$ -	$ 21,600.00	$ 506,828.03	$ -	$ -	$ 620,946.92	$ 4,727,939.05
2 **CONSTRUCTION CONTINGENCY**										
a. Construction Contingency - (Note #1)	$ 303,684.00	$ -	$ -	$ -	$ -	$ -	$ -	$ -	$ -	$ 303,684.00
b. B&O Tax Contingency (Note #3)	$ 121,480.00	$ -	$ -	$ -	$ -	$ -	$ -	$ -	$ -	$ 121,480.00
3 **LEGAL SERVICES**										
a. Project Attorney - (Note #4)	$ 170,000.00	$ -	$ -	$ 812.50	$ -	$ -	$ -	$ 2,957.50	$ -	$ 20,696.41
4 **ACCOUNTING SERVICES**										
a. Project Account - CPA	$ 30,000.00	$ -	$ -	$ -	$ -	$ -	$ -	$ -	$ -	$ 7,787.50
5 **ENGINEERING SERVICES**										
a. RK&K Engineering fees	$ 596,090.00	$ -	$ -	$ -	$ -	$ -	$ -	$ -	$ -	$ 3,670.19
b. GDF Engineering (Construction Admin & RPR)	$ 300,000.00	$ -	$ -	$ 24,305.25	$ -	$ -	$ 32,559.03	$ 35,677.65	$ -	$ 143,865.53
6 **ADMINISTRATIVE SERVICES**										
a. Other Administrative Costs	$ 8,850.00	$ -	$ -	$ -	$ -	$ -	$ -	$ -		$ 3,472.86
7 **LANDS/EASEMENTS**										
a. Easements	$ 50,600.00	$ -	$ -	$ -	$ -	$ -	$ -	$ -	$ -	$ 3,275.00
b. R/W Agent - (Note #2)	$ 100,690.72	$ -	$ -	$ -	$ -	$ -	$ -	$ -	$ -	$ -
c. Permits - (Note #2)	$ 6,859.28	$ -	$ -	$ 1,170.00	$ -	$ -	$ -	$ 1,550.00	$ -	$ 3,139.28
d. Plats - (Note #2)	$ 14,120.00	$ -	$ -	$ -	$ -	$ -	$ -	$ 2,141.37	$ -	$ 79.63
8 Sub Total Line 1-7	**$ 7,776,374.00**	**$ 148,131.00**	**$ 48,555.00**	**$ 26,287.75**	**$ 21,600.00**	**$ 506,828.03**	**$ 32,559.03**	**$ 42,326.52**	**$ 620,946.92**	**$ 5,339,089.45**
B. COST OF FINANCING										
9 Registrar Fees	$ 650.00	$ -	$ -	$ -	$ -	$ -	$ -	$ -	$ -	$ -
10 Bond Counsel (S&J)	$ 40,000.00	$ -	$ -	$ -	$ -	$ -	$ -	$ -	$ -	$ -
11 Sub Total of Financing - Line 9-10	**$ 40,650.00**	**$ -**	**$ -**	**$ -**	**$ -**					**$ -**
12 Total Project Costs Line 8 + Line 11	**$ 7,817,024.00**	**$ 148,131.00**	**$ 48,555.00**	**$ 26,287.75**	**$ 21,600.00**	**$ 506,828.03**	**$ 32,559.03**	**$ 42,326.52**	**$ 620,946.92**	**$ 5,339,089.45**

B. SOURCES OF FUNDS	APPROVED PROJECT FUNDING	Request for Payment (RFP) # 8 CWSRF # 2	Request for Payment (RFP) # 9 CWSRF # 3	Request for Payment (RFP) # 10 CIF # 7	Request for Payment (RFP) #11 CWSRF # 4	Request for Payment (RFP) #12 CWSRF # 5	Request for Payment (RFP) # 13 CIF # 8	Request for Payment (RFP) # 14 CIF # 9	Request for Payment (RFP) #15 CWSRF # 6	BALANCE REMAINING
1 INTERNAL FUNDS										
a. Capacity Improvement Fees	$ 3,057,560.00	$ -	$ -	$ (26,287.75)	$ -	$ -	$ (32,559.03)	$ (42,326.52)	$ -	$ 1,966,336.40
b. CTUB Operating Fund	$ 121,480.00	$ -	$ -	$ -	$ -	$ -	$ -	$ -	$ -	$ 121,480.00
1 Subtotal Internal Funds	**$ 3,179,040.00**	**$ -**	**$ -**	**$ (26,287.75)**	**$ -**	**$ -**	**$ (32,559.03)**	**$ (42,326.52)**	**$ -**	**$ 2,087,816.40**
2 GRANT FUNDS										
a. State Grant (EEGF)	$ 1,077,000.00	$ -	$ -	$ -	$ -	$ -	$ -	$ -	$ -	$ 1,077,000.00
b. Federal Grant (CWSRF) - "Green Grant"	$ 500,000.00	$ -	$ -	$ -	$ -	$ -	$ -	$ -	$ -	$ 500,000.00
2 Subtotal Grant Funds	**$ 1,577,000.00**	**$ -**	**$ -**	**$ -**	**$ -**	**$ -**	**$ -**	**$ -**	**$ -**	**$ 1,577,000.00**
3 BOND ISSUE										
a. CWSRF Loan - (1%, 40 Year)	$ 2,844,984.00	$ (148,131.00)	$ (48,555.00)	$ -	$ (21,600.00)	$ (506,828.03)	$ -	$ -	$ (620,946.92)	$ 1,458,273.05
b. CWSRF Loan - (3%, 20 Year)	$ 216,000.00	$ -	$ -	$ -	$ -	$ -	$ -	$ -	$ -	$ 216,000.00
3 Subtotal Bond Issue	**$ 3,060,984.00**	**$ (148,131.00)**	**$ (48,555.00)**	**$ -**	**$ (21,600.00)**	**$ (506,828.03)**	**$ -**	**$ -**	**$ (620,946.92)**	**$ 1,674,273.05**
4 Total Sources of Funds Line 1-3	**$ 7,817,024.00**	**$ (148,131.00)**	**$ (48,555.00)**	**$ (26,287.75)**	**$ (21,600.00)**	**$ (506,828.03)**	**$ (32,559.03)**	**$ (42,326.52)**	**$ (620,946.92)**	**$ 5,339,089.45**

Note #1 - 12/10/2024 - The CWSRF loan in the amount of $216,016 was shown as $216,000 on the closing documentation. Per the State, the CWSRF loan and the total project costs line items on the Schedule B were reduced by $16.00 to correct the error.

Note #2 - 12/11/2024 - Line item R/W Agent was decreased by $1,444.28 to actual, line item Permits was decreased by $140.72, and the line item for Plats was increased by $1,585.00.

Note #3 - 6/11/2025 - Change Order No. 1 - Upon the denial of the B&O waiver request by the City of Charles Town and the City of Ranson, the CTUB Board approved the payment of the B&O taxes to both municipalities to be paid from internal funds.

Note #4 - 6/25/2025 - Amendment No. 2 was approved to increase project legal services by $30,000, not to exceed $170,000.

Note #5 -8/5/2025 - Line item Admin Costs was decreased by $1,150 and the line item for Plats was increased by $1,150.

CHARLES TOWN UTILITY BOARD

Wednesday, August 27, 2025

Regular Meeting

661 South George Street
Charles Town, WV 25414

Madison Greens AMEA

Attachments:

Madison Greens Sewer AMEA - Draft.pdf

ALTERNATE MAINLINE SEWAGE COLLECTION SYSTEM AGREEMENT

THIS AGREEMENT (the "Agreement") is made and effective this _____day of _____, 2025, by and between the **CITY OF CHARLES TOWN, by and through the CHARLES TOWN UTILITY BOARD**, (hereafter, "CTUB") and **MADISON GREENS, LLC.** (hereafter " the DEVELOPER").

WHEREAS, CTUB has been authorized by City Ordinance Chapter 13, Article II to develop sewage collection and treatment facilities throughout its service area, together with vicinity residents and businesses, with public sewer service; and

WHEREAS, CTUB wishes to make public sewage collection and treatment facilities available to the greatest number of residential, commercial and industrial customers located within the service area as expeditiously as possible; and,

WHEREAS, the DEVELOPER is planning to develop certain lands known as Madison Greens Subdivision (the "Development") located within CTUB's service territory within Jefferson County for residential development; and,

WHEREAS, the Development will be located to the west of Fairfax Circle and North Fairfax Boulevard; and

WHEREAS, the DEVELOPER intends to construct 143 single family and 149 townhome units; and

WHEREAS, the DEVELOPER intends to construct an On-site sewage collection systems on, in the area near to, or adjacent to the Development as approved by CTUB on the Development's Preliminary Plat including approximately 7,330 LF of 8" sewer line, to the point of connection to the existing CTUB sewer system, along with the associated service laterals and manholes (the "Sewage Collection Systems") to service the Residential Lots, which will connect to the sewage collection and pumping system of CTUB; and

WHEREAS, it is in the best interest of the future users of the Development to have public sewer collection facilities available: and

WHEREAS, The Developer has read Rule 7.4 of the Public Service Commission of West Virginia's ("Commission") Rules for the Government of Sewer Utilities that became effective on March 25, 2023, in its entirety, understands the Rule and chooses to enter into this alternate main line extension agreement and to waive its right to refunds provided thereunder.

DRAFT

NOW, THEREFORE, for and in consideration of the covenants and agreements set forth herein, and other good and valuable consideration the receipt and sufficiency of which are hereby acknowledged, CTUB and the DEVELOPER agree:

ARTICLE I

DESIGN AND REGULATORY APPROVAL

Section 1.01. The DEVELOPER hereby agrees to employ qualified professional engineers to design the On-site sewage collection system (collectively referred to herein as "Sewage Collection System") for the DEVELOPER'S project, as described in general herein. All designs will be developed at the DEVELOPER'S expense and comply with CTUB'S Sewer System Specifications. All designs shall be reviewed and approved by CTUB's engineer prior to submission to the West Virginia Bureau for Public Health and the West Virginia Division of Environmental Protection for permits to construct and prior to the commencement of construction. Neither CTUB or its engineers or agents shall bear any financial or any other responsibility for the design and construction of the Sewage Collection System.

Section 1.02. The DEVELOPER shall, at its own expense, submit the plans and specifications to the appropriate State, Federal, and local agencies for their approval. Any changes in the plans and specifications required by the governmental agencies shall be subject to the approval of CTUB. If requested, plans and specifications shall be submitted to the Commission for review.

ARTICLE II

CONSTRUCTION AND INSPECTION

Section 2.01. The DEVELOPER will construct the entire Sewer Collection System under this Agreement, including but not limited to, all main lines, service lines, pumping facilities, or other necessary appurtenances, for all residential, commercial, or other customers, either proposed or existing, On-site and Off-site as approved by CTUB on the Development's Preliminary Plat at the DEVELOPER'S expense. All construction shall be done in accordance with the approved plans and specifications for the Development and CTUB' s current specifications. The DEVELOPER shall obtain, at its own expense, with the cooperation and support of CTUB, all necessary permits, authorizations and approvals of State, Federal, and local agencies during the construction phase and shall make such changes as are required by said agencies during this phase and such changes shall not be subject to further approval by CTUB. Section 2.02. The DEVELOPER shall, with the cooperation and support of CTUB, obtain all necessary rights-of-way, real property, easements and take all other such actions, including but not limited to, legal action, as are necessary to complete the Sewer Collection System, at the DEVELOPER'S own expense.

CTUB shall, at the request of the DEVELOPER, take such actions as are permitted by law to aid in obtaining the necessary rights of way, real property or easements on land not owned by the DEVELOPER, including, but not limited to, legal actions. The cost of said actions requested by the DEVELOPER, including amounts paid to property owners for the required real estate and easements as well as all litigation costs and taken by CTUB shall be borne by the DEVELOPER.

Section 2.03. Prior to the substantial completion of the construction of the Sewage Collection System or phase thereof, CTUB shall have the right to inspect and approve the system of phase thereof to ensure that: (1) sewage will be satisfactorily transported from the Development in accordance with the terms of this Agreement and all applicable statutes, rules, and regulations legally applicable to CTUB; (2) infiltration will be minimized; (3) illegal and improper sources of inflow are eliminated; and (4) the system was constructed using sound engineering and construction standards, and using materials in compliance with CTUB's standards and specifications.

Section 2.04. CTUB shall have the right to inspect all work of the DEVELOPER, and its contractors, during all phases of construction to insure adequate installation of the system. The DEVELOPER shall pay CTUB for its construction inspection services. All fees shall be paid by the DEVELOPER to CTUB within fifteen (15) days of the date of the preconstruction meeting. Inspection services shall be no more than $1,500.00 per week for full-time inspection services for water and sewer installation.

Section 2.05. At the conclusion of construction, The DEVELOPER shall provide to CTUB a complete set of reproducible copies of the record drawings of the completed construction for the mainline extension, signed and sealed by the engineer who prepared the plans. Also, the DEVELOPER shall provide CTUB with executed easements for all sewer mains. SEWER SERVICE FROM THE MAINLINE EXTENSION COVERED BY THIS AGREEMENT WILL NOT BE GRANTED UNTIL THE "RECORD DRAWINGS" AND THE EXECUTED EASEMENTS ARE RECEIVED BY CTUB.

Section 2.06. At all times during the construction of said sewer system, the DEVELOPER shall maintain sole ownership of said sewer system.

Section 2.07. The DEVELOPER shall complete the mainline extension covered by this Agreement within five (5) years from the date of this Agreement. Failure to do so may make this Agreement null and void as to any uncompleted portions of the mainline extension. CTUB reserves the right to require the DEVELOPER to enter into a new agreement, have a design review and secure new permitting for the completion of the Project if sufficient proof can be demonstrated that rules,

DRAFT

regulations or surrounding conditions have changed during the five (5) year time frame. Any new agreement will require the approval of the Commission.

ARTICLE III

TRANSFER OF OWNERSHIP

Section 3.01. Upon completion of the construction of the Sewage Collection System, or phase thereof, or parts of phases thereof at the discretion of CTUB, the DEVELOPER shall, with the cooperation and support of CTUB, obtain such State, Federal, and local certifications, authorizations, or approvals as required, at the DEVELOPER'S expense. After said certifications, authorizations or approvals are obtained, and the Sewage Collection System or phase thereof is completed in all respects, the DEVELOPER shall provide CTUB written notice of said completion. As used in this and subsequent Sections, "completed in all respects" includes, but is not limited to: (i) the system or phase thereof being physically complete; (ii) all testing performed by the certifying engineer; (iii) all electrical and mechanical systems inspected and certified by approved factory authorized representatives of the manufacturers; (iv) all systems or phase thereof having passed component validation, start-up and demonstration periods and training performed; (v) all engineers, material men, contractors and subcontractors of the DEVELOPER being paid for their work on said system or phase thereof; (vi) all rights of way, real property and easements required for the operation of the Sewage Collection System or phase thereof are acquired; (vii) all legal disputes regarding the Sewerage Collection System being materially resolved; and (viii) no outstanding liens on the Sewage Collection System or phase thereof existing.

Section 3.02. Upon receipt of the written notice described in Section 3.01, CTUB shall have thirty (30) days to inspect said Sewage Collection System or phase thereof and run such tests, at CTUB's sole expense, as CTUB feels are appropriate and necessary to determine that the Sewage Collection System or phase thereof has been properly designed and constructed using sound engineering and construction standards. Within the thirty (30) day period, CTUB shall provide the DEVELOPER, in writing, a list of repairs which CTUB reasonably believes are required to cause the Sewage Collection System or phase thereof to comply with the plans and specifications previously approved by CTUB, as may have been modified by the changes required by any applicable State or Federal agency or other City department, and a list of other actions, which the DEVELOPER must take so that the system or phase thereof is completed in all respects in accordance with the approved plans. The DEVELOPER, at its own expense, shall make said reasonable repairs and once said repairs have been made, the DEVELOPER will provide CTUB with an additional written notice as

set forth in Section 3.01 and CTUB shall have the same rights as it had upon receipt of the initial notice. The DEVELOPER shall not connect any businesses or structures to the sewer system or phase thereof until it has been fully tested by the engineer and CTUB and all repairs required by CTUB have been made. Notwithstanding the foregoing, if CTUB does not inspect the Sewage Collection System or phase thereof within thirty (30) days after receipt of the written notice described in Section 3.01., CTUB's right to such inspection shall terminate.

Section 3.03. If, after receipt of the notice set forth in Section 3.01, CTUB determines that the Sewage Collection System or phase thereof is completed in all respects, the DEVELOPER shall deliver, and CTUB shall accept, ownership of the Sewage Collection System. The ownership will include any additional required off-site Sewage Collection System necessary to connect to the sewage collection and pumping system built as part of the Development, including rights-of-way, and all real property and easements. The transfer of ownership shall occur no late than fifteen (15) days after the expiration of CTUB' s right of inspection and testing, set forth in Section 3.02. At the time of the transfer of ownership of the Sewage Collection System or phase thereof to CTUB, to the extent that any of the DEVELOPER'S funds are bonded or subject to a letter of credit tied to the Sewage Collection System or phase thereof, DEVELOPER shall retain ownership in such funds and such funds shall be automatically returned to the DEVELOPER upon the termination of any such bond or letter of credit.

Section 3.04. Ownership of the Sewage Collection System or phase thereof and any required additional off-site collection and pumping systems shall be transferred by the DEVELPER to CTUB prior to connection to the sewage facilities built by the DEVELOPER as part of the Development.

Section 3.05. Prior to the transfer of ownership of the Sewage Collection System or phase thereof to CTUB, when the DEVELOPER applies for a building permit to construct a residential, commercial or industrial building in the Development, the DEVELOPER shall pay to CTUB (i) a non-refundable tap and inspection fee pursuant to approved CTUB tariff and (ii) a non-refundable capacity improvement fee pursuant to the approved CTUB tariff. Payments shall be made on the same date the DEVELOPER applies for a building permit to construct the residential, commercial or industrial building in the Development, which will result in said additional Customer. Notwithstanding the foregoing, CTUB shall only be entitled to retain a DEVELOPER tap or connection fee if CTUB, using its own resources, actually installs or inspects the tap and/or connection line and physically connects or inspects the connection to the customer's service. Once CTUB collects a tap or connection fee in accordance with the terms of this Agreement, CTUB shall not be permitted to collect from the customer any additional tap or service connection fee. CTUB

shall only be permitted to collect one tap or connection fee per service connection in accordance with its Tariff on file with the Commission. CTUB's right to either retain the DEVELOPER's tap or connection fee deposit or to assess a tap or connection fee from a customer is contingent upon CTUB installing the tap and/or connection line, which physically connects a customer's service to the DEVELOPER's collection system.

ARTICLE IV

DEVELOPER REIMBURSEMENT

Section 4.01. CTUB will not reimburse the Developer for the installation, cost or any other costs associated with the installation and construction of the Sewage Collection System. Developer expressly waives any right to reimbursement under the Commission's Sewer Rules, 150 CSR 5, Rule 7.4, a copy of which is attached hereto as Exhibit A, and made a part hereof, and understand that CTUB's extension of service outlined in the Agreement herein shall be construed as an exemption to Rule 7.4. The Developer will collect reimbursement through appropriate pricing of real estate within its Development.

Section 4.02. Not later than fifteen (15) business days following the time of the transfer of ownership of the Sewage Collection System or phase thereof as provided in Article III, Developer shall provide CTUB with an itemized accounting of the costs of the Sewage Collection System or phase thereof. The costs shall include, but not limited to, labor, materials, engineering fees and costs of permits. CTUB shall have a right to review copies of the records of Developer relating to the development of the Sewage Collection System and Developer shall, at the request of CTUB, provide CTUB with copies of all invoices relating to the development of the Sewage Collection System or phase thereof. CTUB shall verify the total cost of the Sewage Collection System or phase thereof and shall give notice in writing to Developer of CTUB's calculation of the total cost of the Sewage Collection System or phase thereof (the "Project Cost").

ARTICLE V

CONDITIONS PRECEDENT

Section 5.01. This Agreement and the respective obligations of the parties are expressly conditioned upon the decision by the DEVELOPER, such decision to be made in the sole and absolute discretion of the DEVELOPER, to commence construction of the Development and upon the written approval of this Agreement by the Commission.

Section 5.02. The DEVELOPER waives the right to receive an estimate of the cost of the extension.

DRAFT

Section 5.03. As a condition to obtaining a main extension, the DEVELOPER shall grant CTUB the necessary easements which will allow CTUB to make future extensions into unserved areas. Such future extensions shall not adversely affect the intended use of the Developer's Property nor shall Developer incur any additional cost for granting of said easement or construction within the easement(s).The granting of the necessary easements by the Developer to CTUB shall be made without CTUB being required to pay additional consideration for the additional easements to the DEVELOPER, but shall be in such locations as shown on the approved Preliminary Plat for the Madison Greens Development. CTUB has the right to further extend mains from and beyond the terminus of the mains constructed pursuant to this Agreement. In such an event, the DEVELOPER shall not be entitled to any refund for the connection of customers to such extension.

ARTICLE VI

SUBSEQUENT CONNECTIONS

Section 6.01. The DEVELOPER agrees that after the transfer of the ownership of the Sewage Collection System, or any portion thereof, to CTUB, the DEVELOPER shall be assessed, to the extent DEVELOPER owns the property for which a connection is requested, for each new connection upon the issuance of a sewer availability letter (i) a non-refundable tap and inspection fee pursuant to approved CTUB tariff and (ii) a non-refundable capacity improvement fee pursuant to the approved CTUB tariff. Payments shall be made on the same date the DEVELOPER applies for a building permit to construct the residential, commercial or industrial building in the Development, which will result in said additional Customer. Notwithstanding the foregoing, CTUB shall only be entitled to retain a DEVELOPER tap or connection fee if CTUB, using its own resources, actually installs or inspects the tap and/or connection line and physically connects or inspects the connection to the customer's service. Once CTUB collects a tap or connection fee in accordance with the terms of this Agreement, CTUB shall not be permitted to collect from the customer any additional tap or service connection fee. CTUB shall only be permitted to collect one tap or connection fee per service connection in accordance with its Tariff on file with the PSC. CTUB's right to either retain DEVELOPER's tap or connection fee deposit or to assess a tap or connection fee from a customer is contingent upon CTUB installing the tap and/or connection line, which physically connects a customer's service to the DEVELOPER's collection system.

Section 6.02. The DEVELOPER hereby agrees that in the event that the DEVELOPER transfers, prior to completion, any portion of DEVELOPER'S land in the Development to any individual, corporation or other entity who will continue to engage in development of said land as

DRAFT

contemplated by this Agreement, resulting in additional customers for CTUB, the DEVELOPER shall require, as a term of said transfer, that said individual, corporation or other entity assume the obligations of this Agreement.

ARTICLE VII

REPRESENTATIONS AND WARRANTIES

Section 7.01. The parties represent and warrant that the execution, delivery and performance of this agreement by them has been duly authorized and this agreement constitutes a valid and binding obligation of the parties in force full and accordance with its terms.

Section 7.02. The DEVELOPER represents and warrants that the Sewage Collection System or phase thereof will be designed and constructed in a proper workmanlike manner using sound principles of engineering and construction. The DEVELOPER hereby warrants DEVELOPER'S work on the Sewage Collection System's or phase thereof electrical and mechanical components, pump stations and treatment facilities for one (1) year from the date of the transfer of ownership of the Sewage Collection System or phase thereof to CTUB and, during such period, will make such repairs at the DEVELOPER'S expense, as are needed to maintain the Sewage Collection System or phase thereof in a proper operating condition in accordance with the approved plans therefore. CTUB will be responsible for reasonable maintenance of the system according to sound operating procedures and manufacturer's recommendations. The DEVELOPER will not be responsible for repairs due to CTUB failing to reasonably maintain the system.

Section 7.03. Upon notice from CTUB that all construction and testing requirements have been met, DEVELOPER shall post a one (1) year warranty bond in an amount sufficient to replace the system or phase thereof constructed by the DEVELOPER. The amount of the bond shall be 100-percent of the cost of the improvements to be bonded at that time, and shall be for a period of 365 days that will begin on the date ownership of the On-site and Off-site Sewage Collection System or phase thereof is transferred to CTUB, At the conclusion of such one (1) year period, any warranty bond with respect to the Sewage Collection System or phase thereof shall automatically terminate and all bonded funds shall automatically be returned to the DEVELOPER.

ARTICLE VIII

MISCELLANEOUS PROVISIONS

Section 8.01. This Agreement shall in no manner alter or affect presently existing rates, charges, minimums or tariffs of CTUB and the same rates, fees, charges, minimums and tariffs shall

apply uniformly to all customers of CTUB. This Agreement shall at all times be subordinate to any present or future trust indentures or other similar liens on the assets of CTUB, and the parties hereto recognize the priority of any such obligations and upon occurrence of default or assumption of operation and control by the trustee or holders of the bonds of CTUB this Agreement shall be subordinate to such obligations.

Section 8.02. Nothing in this Agreement shall be construed to make CTUB or its engineer and agents liable or responsible for any obligations of the DEVELOPER.

Section 8.03. The DEVELOPER hereby agrees to save and indemnify and keep harmless CTUB, its engineer and agents against all liability claims and judgments or demands for damages arising from accidents to third persons occurring prior to the date of the transfer of the ownership of the Sewage Collection System or phase thereof to CTUB, or to property owned by third persons occasioned by the DEVELOPER, its agents, employees, contractors and subcontractors, and against all claims for damages arising from accidents to the DEVELOPER, its agents, employees, contractors and sub-contractors, occasioned by third persons occurring prior to the date of the transfer of the Sewage Collection System to CTUB, except for those legally attributable to CTUB, its engineer or agents, other than the DEVELOPER, or employees of CTUB. The DEVELOPER will defend any and all suits that may be brought against CTUB on account of any such accidents (except those legally attributable to CTUB, its engineer or agents, other than Developer, or employees of CTUB) and will make good to, and reimburse, CTUB for any reasonable, out-of- pocket expenditures (including, but not limited to reasonable legal fees and expenses) that CTUB may make by reason of such accidents.

Section 8.04. The DEVELOPER hereby agrees to save and indemnify and keep harmless CTUB, its engineer and agents from all claims, demands, causes of action, or suits of whatever nature arising out of the labor and materials used by the DEVELOPER and their contractors or sub-contractors, and from all laborers', materialmen's and mechanics' liens upon the Sewage Collection System or upon the property upon which the Sewage Collection System is located arising out of the labor and materials used by the DEVELOPER and its contractors or sub-contractors, and the DEVELOPER shall keep the Sewage Collection System or phase thereof and said property free and clear of all liens, claims and encumbrances until the time of the transfer of ownership of the Sewage Collection System or phase thereof to CTUB.

DRAFT

Section 8.05. Upon transfer of the ownership of the Sewage Collection System or phase thereof to CTUB, nothing in this Agreement shall be construed to provide the DEVELOPER with any ownership or other interest in the Sewage Collection System or phase thereof which will become the exclusive property of CTUB, or with a right to be reimbursed by CTUB for any and all construction cost, except as provided in this Agreement.

Section 8.06. The DEVELOPER hereby agrees to not pursue any lawsuit, cause of action, or claim of any kind against CTUB regarding insufficient sewage treatment capacity.

Section 8.07. This Agreement constitutes the entire Agreement between CTUB and the DEVELOPER with respect to the matters addressed and may be amended only in a subsequent writing executed by both parties. Any amendment to this Agreement should be submitted to the Commission for review and/or approval.

Section 8.08. This Agreement may not be assigned by CTUB without the prior written consent of the other party. The DEVELOPER may assign this Agreement without the consent of CTUB if the DEVELOPER sells all or any portion of the Development.

Section 8.09. The article and section headings in this Agreement are merely for the convenient reference of the parties and shall not affect the meaning or interpretation of this Agreement.

CITY OF CHARLES TOWN, by and through the CHARLES TOWN UTILITY BOARD

By:_____

Its: _____

ATTEST:

_____

Its: _____

MADISON GREENS, LLC.

By:_____

Its:_____

ATTEST:

_____

Its: _____

DRAFT

EXHIBIT A

PUBLIC SERVICE COMMISSION RULE 7.4

Public Service Commission of West Virginia Rules and Regulations for the Government of Sewer Utilities. 150CSR7, Rule 7.4, Extension of Mains

DRAFT

EXHIBIT B

DEVELOPER'S PROJECT

The Sewage Collection System to be constructed by Developer is described in the attached pages.

DRAFT

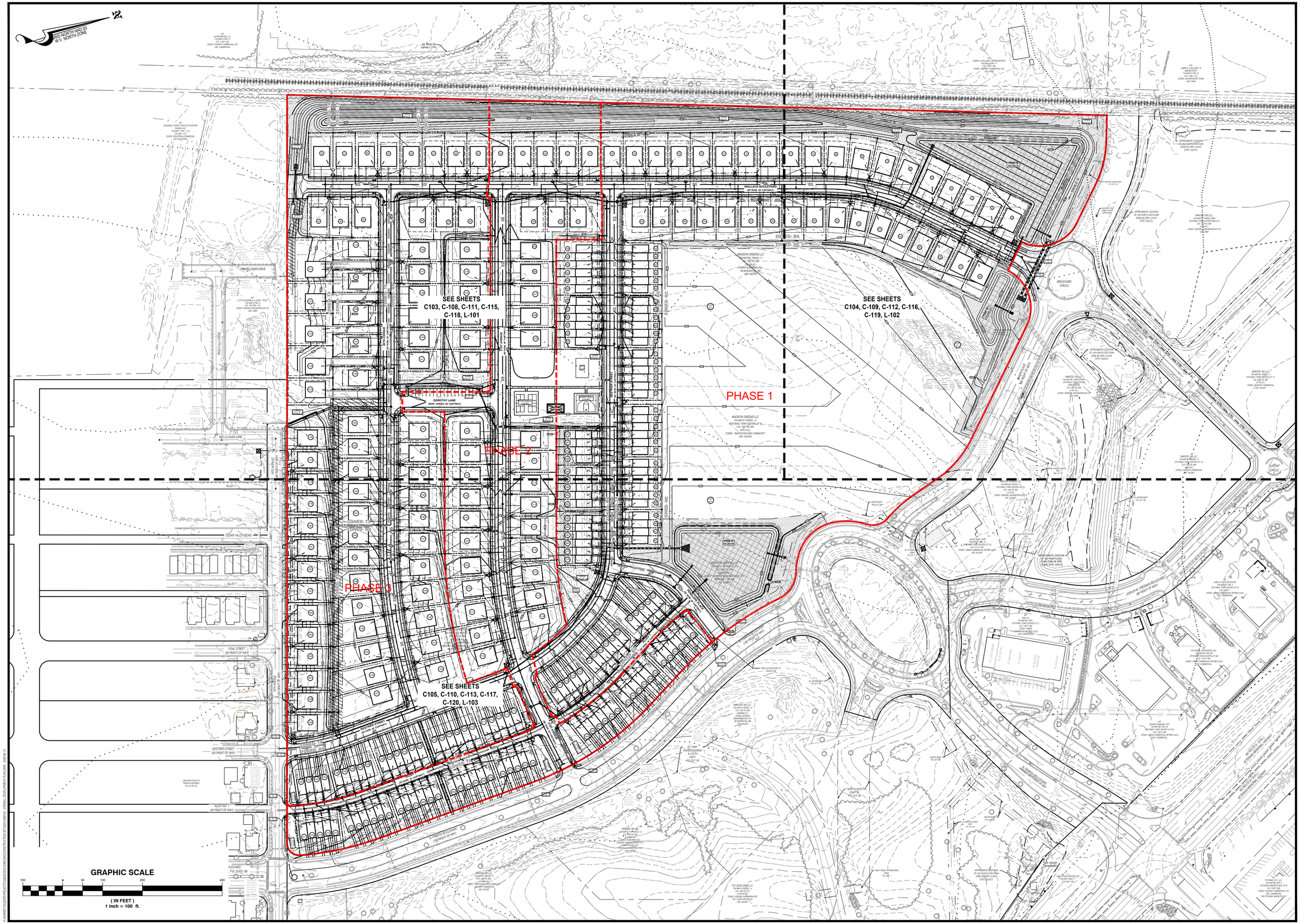

TREVOR MARK FREDERICK
REGISTERED
24227
STATE OF
WEST VIRGINIA
PROFESSIONAL ENGINEER
06/13/2025

Professional Certification:
I hereby certify that these documents were prepared or approved by me, and that I am a duly licensed professional under the laws of the State of: WEST VIRGINIA, License # 24227
Expiration Date 12-31-2024

FSA
FREDERICK, SEIBERT & ASSOCIATES, INC. ©2025
CIVIL ENGINEERS • SURVEYORS • LANDSCAPE ARCHITECTS • LAND PLANNERS
128 SOUTH POTOMAC STREET
HAGERSTOWN, MD 21740
301.791.3650
11142 WILLIAMSPORT PIKE
GREENCASTLE, PA 17225
717.597.1007
505 SOUTH HANOVER STREET
CARLISLE, PA 17013
717.701.8111
15 EAST MAIN STREET
NEW BLOOMFIELD, PA 17068
717.275.7531
fsa-inc.com

MARK	DESCRIPTION	DATE
	REVISED PER AGENCY COMMENTS	03.19.2025
	REVISED PER AGENCY COMMENTS	05.02.2025
	REVISED PER AGENCY COMMENTS	06.11.2025

MADISON GREENS

SITUATED WEST OF FAIRFAX BOULEVARD AND BAKER PLACE
AND NORTH OF 19TH AVENUE
CITY OF RANSON
JEFFERSON COUNTY, WEST VIRGINIA
ATTN: ROB ROTZ
9729 GARIS SHOPO ROAD, HAGERSTOWN MARYLAND 21740
PHONE: 301.491.6999

PROJECT NO. 2023-0285
DWN BY ABRAM MYERS
DATE 12.12.2024
PROJECT MANAGER: TREVOR FREDERICK
EMAIL: TFREDERICK@FSA-INC.COM
PARCEL IDENTIFICATION #: 8-1.1, 8-1.3, 8-1.5, 8-9.2, 8E-17
SCALE 1" = 100'
SHEET TITLE

OVERALL DEVELOPMENT PLAN

C-102
SHEET 04 OF 57

CHARLES TOWN UTILITY BOARD

Wednesday, August 27, 2025

Regular Meeting

661 South George Street
Charles Town, WV 25414

Media Farms AMEA

Attachments:

Media Farms Sewer AMEA - Draft.pdf

ALTERNATE MAINLINE SEWAGE COLLECTION SYSTEM AGREEMENT

THIS AGREEMENT (the "Agreement") is made and effective this _____day of _____, 2025, by and between the **CITY OF CHARLES TOWN, by and through the CHARLES TOWN UTILITY BOARD**, (hereafter, "CTUB") and **Harvest Homes, LLC.** (hereafter " the DEVELOPER").

WHEREAS, CTUB has been authorized by the Public Service Commission of West Virginia ("Commission") to develop sewage collection and treatment facilities throughout its service area, together with vicinity residents and businesses, with public sewer service; and

WHEREAS, CTUB wishes to make public sewage collection and treatment facilities available to the greatest number of residential, commercial and industrial customers located within the service area as expeditiously as possible; and,

WHEREAS, the DEVELOPER is planning to develop certain lands known as Media Farms Subdivision (the "Development") situated within CTUB's service territory; and

WHEREAS, the Development will be located along Flowing Springs Road adjacent to the intersection with Old Country Club Road; and

WHEREAS, the DEVELOPER intends to construct 42 Single Family residential homes; and

WHEREAS, the DEVELOPER intends to construct On-site and Off-site sewage collection systems on, in the area near to, or adjacent to the Development as approved by CTUB on the Development's Preliminary Plat. The On-site sewage collection system includes approximately 3,815 LF of 8" PVC SDR 35 and 400 LF of 8" PVC SDR 26 sewer line. The Off-site sewage collection system includes approximately 50' LF of 8" force main to the point of connection to the existing CTUB sewer system, along with the associated service laterals and manholes (the "Sewage Collection Systems") to service the Residential Lots, which will connect to the sewage collection and pumping system of CTUB; and

WHEREAS, it is in the best interest of the future users of the Development to have public sewer collection facilities available: and

WHEREAS, The Developer has read Rule 7.4 of the Commission's Rules for the Government of Sewer Utilities ("Sewer Rules") that became effective on March 25, 2023, in its entirety, understands the Rule and chooses to enter into this alternate main line extension agreement and to waive its right to refunds thereunder.

DRAFT

NOW, THEREFORE, for and in consideration of the covenants and agreements set forth herein, and other good and valuable consideration the receipt and sufficiency of which are hereby acknowledged, CTUB and the DEVELOPER agree:

ARTICLE I

DESIGN AND REGULATORY APPROVAL

Section 1.01. The DEVELOPER hereby agrees to employ qualified professional engineers to design the On-site and Off-site sewage collection system (collectively referred to herein as "Sewage Collection System") for the DEVELOPER'S project, as described in general herein. All designs will be developed at the DEVELOPER'S expense and comply with CTUB'S Sewer System Specifications. All designs shall be reviewed and approved by CTUB's engineer prior to submission to the West Virginia Bureau for Public Health and the West Virginia Division of Environmental Protection for permits to construct and prior to the commencement of construction. Neither CTUB nor its engineers or agents shall bear any financial or any other responsibility for the design and construction of the Sewage Collection System (the design and construction of the Sewer Collection System shall be collectively referred to as the "Project").

Section 1.02. The DEVELOPER shall, at its own expense, submit the plans and specifications to the appropriate State, Federal, and local agencies for their approval. Any changes in the plans and specifications required by the governmental agencies shall be subject to the approval of CTUB. If requested, plans and specifications shall be submitted to the Commission for review.

ARTICLE II

CONSTRUCTION AND INSPECTION

Section 2.01. The DEVELOPER will construct the entire Sewer Collection System under this Agreement, including but not limited to, all main lines, service lines, pumping facilities, or other necessary appurtenances, for all residential, commercial, or other customers, either proposed or existing, On-site and Off-site as approved by CTUB on the Development's Preliminary Plat at the DEVELOPER'S expense. All construction shall be done in accordance with the approved plans and specifications for the Development and CTUB' s specifications. The DEVELOPER shall obtain, at its own expense, with the cooperation and support of CTUB, all necessary permits, authorizations and approvals of State, Federal, and local agencies during the construction phase and shall make such changes as are required by said agencies during this phase and such changes shall not be subject to further approval by CTUB.

DRAFT

Section 2.02. The DEVELOPER shall, with the cooperation and support of CTUB, obtain all necessary rights-of-way, real property, easements and take all other such actions, including but not limited to, legal action, as are necessary to complete the Sewer Collection System, at the DEVELOPER'S own expense. CTUB shall, at the request of the DEVELOPER, take such actions as are permitted by law to aid in obtaining the necessary rights of way, real property or easements on land not owned by the DEVELOPER, including, but not limited to, legal actions. The cost of said actions requested by the DEVELOPER, including amounts paid to property owners for the required real estate and easements as well as all litigation costs and taken by CTUB shall be borne by the DEVELOPER.

Section 2.03. CTUB shall bear no financial or other responsibility for the construction of the Sewage Collection System in the Development. However, prior to the substantial completion of the construction of the Sewage Collection System or phase thereof, CTUB shall have the right to inspect and approve the system of phase thereof to ensure that: (1) sewage will be satisfactorily transported from the Development in accordance with the terms of this Agreement and all applicable statutes, rules, and regulations legally applicable to CTUB; (2) infiltration will be minimized; (3) illegal and improper sources of inflow are eliminated; and (4) the system was constructed using sound engineering and construction standards, and using materials in compliance with CTUB's standards and specifications.

Section 2.04. CTUB shall have the right to inspect all work of the DEVELOPER, and its contractors, during all phases of construction to insure adequate installation of the system. The DEVELOPER shall pay CTUB for its construction inspection services. All fees shall be paid by the DEVELOPER to CTUB within fifteen (15) days of the date of the preconstruction meeting. Inspection services shall be no more than $1,500.00 per week for full-time inspection services for sewer installation.

Section 2.05. At the conclusion of construction, The DEVELOPER shall provide to CTUB a complete set of reproducible copies of the record drawings of the completed construction for the mainline extension, signed and sealed by the engineer who prepared the plans. Also, the DEVELOPER shall provide CTUB with executed easements for all sewer mains. SEWER SERVICE FROM THE MAINLINE EXTENSION COVERED BY THIS AGREEMENT WILL NOT BE GRANTED UNTIL THE "RECORD DRAWINGS" AND THE EXECUTED EASEMENTS ARE RECEIVED BY CTUB.

DRAFT

Section 2.06. At all times during the construction of said sewer system, or Phase thereof if the project is phased, the DEVELOPER shall maintain sole ownership of said sewer system.

Section 2.07. The DEVELOPER shall complete the mainline extension covered by this Agreement within five (5) years from the date of this Agreement. Failure to do so may make this Agreement null and void as to any uncompleted portions of the mainline extension. CTUB reserves the right to require the DEVELOPER to enter into a new agreement, have a design review and secure new permitting for the completion of the Project if sufficient proof can be demonstrated that rules, regulations or surrounding conditions have changed during the five (5) year time frame. Any new agreement will require the approval of the Commission.

ARTICLE III

TRANSFER OF OWNERSHIP

Section 3.01. Upon completion of the construction of the Sewage Collection System, or phase thereof, or parts of phases thereof at the discretion of CTUB, the DEVELOPER shall, with the cooperation and support of CTUB, obtain such State, Federal, and local certifications, authorizations, or approvals as required, at the DEVELOPER'S expense. After said certifications, authorizations or approvals are obtained, and the Sewage Collection System or phase thereof is completed in all respects, the DEVELOPER shall provide CTUB written notice of said completion. As used in this and subsequent Sections, "completed in all respects" includes, but is not limited to: (i) the system or phase thereof being physically complete; (ii) all testing performed by the certifying engineer; (iii)all electrical and mechanical systems inspected and certified by approved factory authorized representatives of the manufacturers; (iv) all systems or phase thereof having passed component validation, start-up and demonstration periods and training performed; (v) all engineers, material men, contractors and subcontractors of the DEVELOPER being paid for their work on said system or phase thereof; (vi) all rights of way, real property and easements required for the operation of the Sewage Collection System or phase thereof are acquired; (vii) all legal disputes regarding the Sewerage Collection System being materially resolved; and (viii) no outstanding liens on the Sewage Collection System or phase thereof existing.

Section 3.02. Upon receipt of the written notice described in Section 3.01, CTUB shall have ninety (90) days to inspect said Sewage Collection System or phase thereof and run such tests, at CTUB's sole expense, as CTUB feels are appropriate and necessary to determine that the Sewage Collection System or phase thereof has been properly designed and constructed using sound engineering and construction standards. Within the ninety (90) day period, CTUB shall provide the

DRAFT

DEVELOPER, in writing, a list of repairs which CTUB reasonably believes are required to cause the Sewage Collection System or phase thereof to comply with the plans and specifications previously approved by CTUB, as may have been modified by the changes required by any applicable State or Federal agency or other City department, and a list of other actions, which the DEVELOPER must take so that the system or phase thereof is completed in all respects in accordance with the approved plans. The DEVELOPER, at its own expense, shall make said reasonable repairs and once said repairs have been made, the DEVELOPER will provide CTUB with an additional written notice as set forth in Section 3.01 and CTUB shall have the same rights as it had upon receipt of the initial notice. The DEVELOPER shall not connect any businesses or structures to the sewer system or phase thereof until it has been fully tested by the engineer and CTUB and all repairs required by CTUB have been made. Notwithstanding the foregoing, if CTUB does not inspect the Sewage Collection System or phase thereof within thirty (30) days after receipt of the written notice described in Section 3.01., CTUB's right to such inspection shall terminate.

Section 3.03. If, after receipt of the notice set forth in Section 3.01, CTUB determines that the Sewage Collection System or phase thereof is completed in all respects, the DEVELOPER shall deliver, and CTUB shall accept, ownership of the Sewage Collection System or phase thereof necessary to connect to the sewage collection and pumping system built as part of the Development including rights-of-way, and all real property and easements necessary for the ownership, operation and maintenance of the system. The transfer of ownership shall occur no late than fifteen (15) days after the expiration of the CTUB' s right of inspection and testing, set forth in Section 3.02.

Section 3.04. Nothing in this Article shall be construed to prevent CTUB from accepting ownership of the system a section at a time, provided that CTUB shall accept a section of the system only if said section is complete in all respects and can be fully operational at the time of the transfer of that section. CTUB and the DEVELOPER shall have the same rights and obligations and shall follow the same procedures established in the Article for the transfer of ownership of the entire system.

Section 3.05. Prior to the transfer of ownership of the Sewage Collection System or phase thereof to CTUB, when the DEVELOPER applies for a building permit to construct a residential, commercial or industrial building in the Development, the DEVELOPER shall pay to CTUB (i) a non-refundable tap and inspection fee pursuant to approved CTUB tariff and (ii) a non-refundable Capacity Improvement Fee pursuant to the approved CTUB tariff. Payments shall be made on the same date the DEVELOPER applies for a building permit to construct the residential, commercial

or industrial building in the Development, which will result in said additional Customer. Notwithstanding the foregoing, CTUB shall only be entitled to retain a DEVELOPER tap or connection fee if CTUB, using its own resources, actually installs or inspects the tap and/or connection line and physically connects or inspects the connection to the customer's service. Once CTUB collects a tap or connection fee in accordance with the terms of this Agreement, CTUB shall not be permitted to collect from the customer any additional tap or service connection fee. CTUB shall only be permitted to collect one tap or connection fee per service connection in accordance with its Tariff on file with the Commission. CTUB's right to either retain the DEVELOPER's tap or connection fee deposit or to assess a tap or connection fee from a customer is contingent upon CTUB installing the tap and/or connection line, which physically connects a customer's service to the DEVELOPER's collection system.

ARTICLE IV

DEVELOPER REIMBURSEMENT

Section 4.01. CTUB will not reimburse the Developer for the installation, cost or any other costs associated with the installation and construction of the Sewage Collection System. Developer expressly waives any right to reimbursement under the Commission's Sewer Rules, 150 CSR 5, Rule 7.4, a copy of which is attached hereto as Exhibit A, and made a part hereof, and understands that CTUB's extension of service outlined in the Agreement herein shall be construed as an exemption to Rule 7.4. The Developer will collect reimbursement through appropriate pricing of real estate within its Development.

Section 4.02. Not later than fifteen (15) business days following the time of the transfer of ownership of the Sewage Collection System or phase thereof as provided in Article III, Developer shall provide CTUB with an itemized accounting of the costs of the Sewage Collection System or phase thereof. The costs shall include, but shall not be limited to, labor, materials, engineering fees and costs of permits. CTUB shall have a right to review copies of the records of Developer relating to the development of the Sewage Collection System and Developer shall, at the request of CTUB, provide CTUB with copies of all invoices relating to the development of the Sewage Collection System or phase thereof. CTUB shall verify the total cost of the Sewage Collection System or phase thereof and shall give notice in writing to Developer of CTUB's calculation of the total cost of the Sewage Collection System or phase thereof (the "Project Cost").

DRAFT

ARTICLE V

CONDITIONS PRECEDENT

Section 5.01. This Agreement and the respective obligations of the parties are expressly conditioned upon the decision by the DEVELOPER, such decision to be made in the sole and absolute discretion of the DEVELOPER, to commence construction of the Development and upon the written approval of this Agreement by the Commission.

Section 5.02. The DEVELOPER waives the right to receive an estimate of the cost of the extension.

Section 5.03. As a condition to obtaining a main extension, the DEVELOPER shall grant CTUB the necessary easements which will allow CTUB to make future extensions into unserved areas. Such future extensions shall not adversely affect the intended use of the Developer's Property nor shall Developer incur any additional cost for granting of said easement or construction within the easement(s). The granting of the necessary easements by the Developer to CTUB shall be made without CTUB being required to pay additional consideration for the additional easements to the DEVELOPER. CTUB has the right to further extend mains from and beyond the terminus of the mains constructed pursuant to this Agreement. In such an event, the DEVELOPER shall not be entitled to any refund for the connection of customers to such extension.

ARTICLE VI

SUBSEQUENT CONNECTIONS

Section 6.01. The DEVELOPER agrees that after the transfer of the ownership of the Sewage Collection System, or any portion thereof, to CTUB, the DEVELOPER shall be assessed, to the extent DEVELOPER owns the property for which a connection is requested, for each new connection upon the issuance of a sewer availability letter (i) a non-refundable tap and inspection fee pursuant to approved CTUB tariff and (ii) a non-refundable capacity improvement fee pursuant to the approved CTUB tariff. Payments shall be made on the same date the DEVELOPER applies for a building permit to construct the residential, commercial or industrial building in the Development, which will result in said additional Customer. Notwithstanding the foregoing, CTUB shall only be entitled to retain a DEVELOPER tap or connection fee if CTUB, using its own resources, actually installs or inspects the tap and/or connection line and physically connects or inspects the connection to the customer's service. Once CTUB collects a tap or connection fee in accordance with the terms of this

DRAFT

Agreement, CTUB shall not be permitted to collect from the customer any additional tap or service connection fee. CTUB shall only be permitted to collect one tap or connection fee per service connection in accordance with its Tariff on file with the PSC. CTUB's right to either retain DEVELOPER's tap or connection fee deposit or to assess a tap or connection fee from a customer is contingent upon CTUB installing the tap and/or connection line, which physically connects a customer's service to the DEVELOPER's collection system.

Section 6.02. The DEVELOPER hereby agrees that in the event that the DEVELOPER transfers, prior to completion, any portion of DEVELOPER'S land in the Development to any individual, corporation or other entity who will continue to engage in development of said land as contemplated by this Agreement, resulting in additional customers for CTUB, the DEVELOPER shall require, as a term of said transfer, that said individual, corporation or other entity assume the obligations of this Agreement.

ARTICLE VII

REPRESENTATIONS AND WARRANTIES

Section 7.01. The parties represent and warrant that the execution, delivery and performance of this agreement by them has been duly authorized and this agreement constitutes a valid and binding obligation of the parties in force full and accordance with its terms.

Section 7.02. The DEVELOPER represents and warrants that the Sewage Collection System or phase thereof will be designed and constructed in a proper workmanlike manner using sound principles of engineering and construction. The DEVELOPER hereby warrants DEVELOPER'S work on the Sewage Collection System's or phase thereof electrical and mechanical components, pump stations and treatment facilities for one (1) year from the date of the transfer of ownership of the Sewage Collection System or phase thereof to CTUB and, during such period, will make such repairs at the DEVELOPER'S expense, as are needed to maintain the Sewage Collection System or phase thereof in a proper operating condition in accordance with the approved plans therefore. CTUB will be responsible for reasonable maintenance of the system according to sound operating procedures and manufacturer's recommendations. The DEVELOPER will not be responsible for repairs due to CTUB failing to reasonably maintain the system.

Section 7.03. Upon notice from CTUB that all construction and testing requirements have been met, DEVELOPER shall post a one (1) year warranty bond in an amount sufficient to replace the system or phase thereof constructed by the DEVELOPER. The amount of the bond shall be 100-

DRAFT

percent of the cost of the improvements to be bonded at that time, and shall be for a period of 365 days that will begin on the date ownership of the On-Site and Off-Site Sewage Collection System or phase thereof is transferred to CTUB, At the conclusion of such one (1) year period, any warranty bond with respect to the Sewage Collection System or phase thereof shall automatically terminate and all bonded funds shall automatically be returned to the DEVELOPER.

ARTICLE VIII

MISCELLANEOUS PROVISIONS

Section 8.01. This Agreement shall in no manner alter or affect presently existing rates, charges, minimums or tariffs of CTUB and the same rates, fees, charges, minimums and tariffs shall apply uniformly to all customers of CTUB. This Agreement shall at all times be subordinate to any present or future trust indentures or other similar liens on the assets of CTUB, and the parties hereto recognize the priority of any such obligations and upon occurrence of default or assumption of operation and control by the trustee or holders of the bonds of CTUB this Agreement shall be subordinate to such obligations.

Section 8.02. Nothing in this Agreement shall be construed to make CTUB or its engineer and agents liable or responsible for any obligations of the DEVELOPER.

Section 8.03. The DEVELOPER hereby agrees to save and indemnify and keep harmless CTUB, its engineer and agents against all liability claims and judgments or demands for damages arising from accidents to third persons occurring prior to the date of the transfer of the ownership of the Sewage Collection System or phase thereof to CTUB, or to property owned by third persons occasioned by the DEVELOPER, its agents, employees, contractors and subcontractors, and against all claims for damages arising from accidents to the DEVELOPER, its agents, employees, contractors and sub-contractors, occasioned by third persons occurring prior to the date of the transfer of the Sewage Collection System to CTUB, except for those legally attributable to CTUB, its engineer or agents, other than the DEVELOPER, or employees of CTUB. The DEVELOPER will defend any and all suits that may be brought against CTUB on account of any such accidents (except those legally attributable to CTUB, its engineer or agents, other than Developer, or employees of CTUB) and will make good to, and reimburse, CTUB for any reasonable, out of pocket expenditures (including, but not limited to reasonable legal fees and expenses) that CTUB may make by reason of such accidents.

Section 8.04. The DEVELOPER hereby agrees to save and indemnify and keep harmless CTUB, its engineer and agents from all claims, demands, causes of action, or suits of whatever nature

arising out of the labor and materials used by the DEVELOPER and their contractors or sub-contractors, and from all laborers', materialmen's and mechanics' liens upon the Sewage Collection System or upon the property upon which the Sewage Collection System is located arising out of the labor and materials used by the DEVELOPER and its contractors or sub-contractors, and the DEVELOPER shall keep the Sewage Collection System or phase thereof and said property free and clear of all liens, claims and encumbrances until the time of the transfer of ownership of the Sewage Collection System or phase thereof to CTUB.

Section 8.05. Upon transfer of the ownership of the Sewage Collection System or phase thereof to CTUB, nothing in this Agreement shall be construed to provide the DEVELOPER with any ownership or other interest in the Sewage Collection System or phase thereof which will become the exclusive property of CTUB, or with a right to be reimbursed by CTUB for any and all construction cost, except as provided in this Agreement.

Section 8.06. The DEVELOPER hereby agrees to not pursue any lawsuit, cause of action, or claim of any kind against CTUB regarding insufficient sewage treatment capacity.

Section 8.07. This Agreement constitutes the entire Agreement between CTUB and the DEVELOPER with respect to the matters addressed and may be amended only in a subsequent writing executed by both parties. Any amendment to this Agreement should be submitted to the Commission for review and/or approval.

Section 8.08. This Agreement may not be assigned by CTUB without the prior written consent of the other party. The DEVELOPER may assign this Agreement without the consent of CTUB if the DEVELOPER sells all or any portion of the Development.

Section 8.09. The article and section headings in this Agreement are merely for the convenient reference of the parties and shall not affect the meaning or interpretation of this Agreement.

CITY OF CHARLES TOWN, by and through the CHARLES TOWN UTILITY BOARD

By:_____

Its: _____

ATTEST:

_____

Its: _____

DRAFT

HARVEST HOMES, LLC.

By:_____

Its:_____

ATTEST:

_____

Its: _____

DRAFT

EXHIBIT A

PUBLIC SERVICE COMMISSION RULE 7.4

Public Service Commission of West Virginia

Rules and Regulations for the Government of

Sewer Utilities. 150CSR7, Rule 7.4, Extension of Mains.

DRAFT

EXHIBIT B

DEVELOPER'S PROJECT

The Sewage Collection System to be constructed by Developer is described in the attached pages.

DRAFT

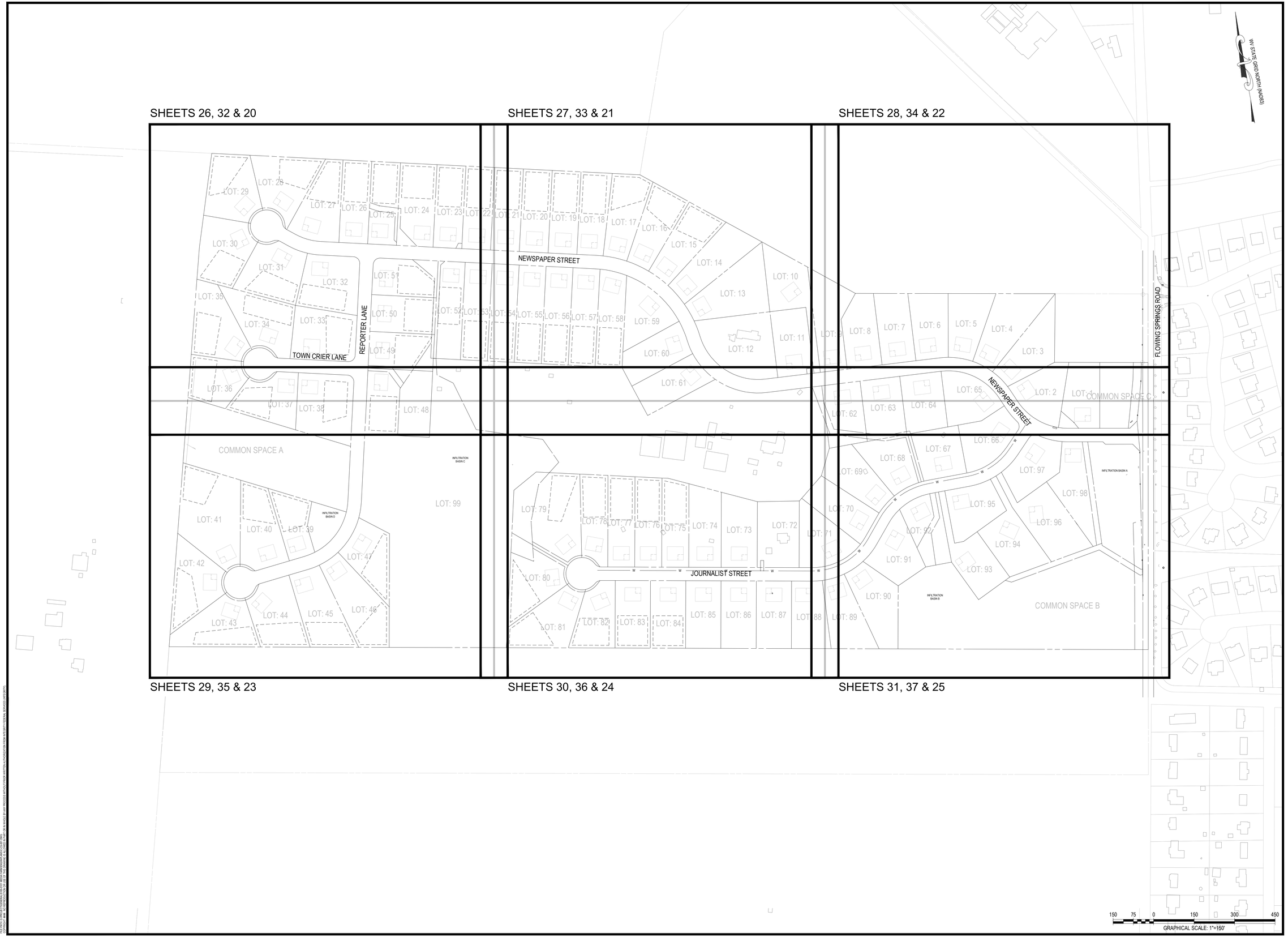

INTEGRITY FEDERAL SERVICES

CIVIL ENGINEERING • LANDSCAPE ARCHITECTURE • PLANNING

148 S. Queen Street, Suite 201 • Phone: 304-725-8456
Martinsburg, WV 25401 • www.ifs-ae.com

SEAL:

REVISIONS

OVERALL KEY MAP

MEDIA FARM SUBDIVISION PRELIMINARY PLAT

TAX MAP 04; PARCEL 11 & 11.1 (D.B. 1330, P.G. 743), PARCEL 13 (D.B. 1331, PG. 1)
CHARLES TOWN TAX DISTRICT
JEFFERSON COUNTY, WEST VIRGINIA

SCALE:	HORIZ.: 1"=150' VERT.:
DATE:	MAY 2025
JOB:	5100-0101
DRAWN: JCH	CHECK: JPG
CADD:	C-CS-001.DWG
NCS:	
SHEET:	19 OF 78

CHARLES TOWN UTILITY BOARD

Wednesday, August 27, 2025

Regular Meeting **661 South George Street**
Charles Town, WV 25414

Huntfield Water Storage Tank Leak Repair

Attachments:

Huntfield Recondition Proposal.pdf

Mid Atlantic Storage Systems, Inc.
QUALITY ERECTORS OF AQUASTORE® ,& tecStore™ TANK SYSTEMS

P R O P O S A L
 # X-4289, August 20, 2025

Charles Town Utility Board
c/o Ms. Kristen M. Stolipher
661 South George Street, Suite 101
Charles Town, WV 25414
PH.: 304-724-7080
Email: kstolipher@ctubwv.com

This PROPOSAL is offered to **Charles Town Utility Board,** hereafter called the BUYER, by Mid Atlantic Storage Systems, Inc., (MASSI) the SELLER, for the following improvements/repairs to be made to the existing Aquastore glass-coated, bolted-steel storage tank as manufactured by CST Storage, Inc. of Dekalb, IL.

TANK OWNER: Charles Town Utility Board, Charles Town, WV

REFERENCE: Model 3147 GFWT (31'dia. x 47' tall – 259,000 gallons) – MIP # 8020797 and installed by Mid Atlantic Storage Systems around 2002.

SCOPE OF WORK – INTERIOR

Task # 1 – MASSI proposes to open the manway door and remove the remaining few inches of water after the tank has been emptied by Owner. Then, MASSI proposes to remove the silt using an industrial vacuum system (more than 4 inches of silt may be additional cost). The silt needs to be legally disposed of onsite, at a nearby treatment facility or another chosen location. Owner is responsible to establish where disposal will be left and for any dumping fees. Disposal costs are not included in the price. Then MASSI proposes to recondition / recaulk ALL the horizontal and vertical **interior** tank seams, glassed, steel floor, and bottom manway on the existing Aquastore glass-coated, bolted-steel water storage tank. MASSI also proposes to inspect the interior of the tank and repair any other misc. minor glass chips, etc. in the tank coating using the std. tank sealer to prevent potential corrosion, etc. at no additional cost. The sealant is used to ensure that the tank is "liquid tight", as well as to protect the panel sheet edges from corrosion. Over time, the sealant degrades and needs to be reapplied. An interior recondition is typically required sooner than an exterior recondition. Unlike an exterior recondition, an interior recondition requires the tank to remain out of service for approx. 7-10 days for the sealant to properly cure. Finally**,** MASSI proposes to provide and install new sacrificial anode bars on the inside floor of the existing Aquastore glass-coated, bolted-steel water storage tank. The exact number of anode bars is determined by the conductivity of the stored water and the size of the tank. A tank of this size normally takes (4) anode bars. The sacrificial anode bars are part of a new NSF approved cathodic protection system, which may not have been available at the time that the above referenced tank was originally installed. The anode bars assist with protecting the tank interior wetted surfaces from excessive corrosion.

SCOPE OF WORK – FLOOR REPAIR

Task # 2 – IF Needed, MASSI proposes to patch any cracked glass and steel in the floor to prevent further floor leaks. To ensure the floor remains watertight MASSI will also clean and apply and NSF-61 approved CIM membrane around the base of the tank to about one (1) foot in on the floor and a few inches up the sidewall.

TEMS SPECIFICALLY NOT INCLUDED IN THIS PROPOSAL AND/OR BY OTHERS

1) The BUYER is responsible for providing free, clear and easy access to the tank site for our trucks.
2) The BUYER shall provide sufficient space adjacent to and around the tank site for Seller's access and equipment.
3) The BUYER is responsible for providing a well-drained, level and prepared tank site to include access roads; site clearing, grading; leveling; drainage; erosion control, brush removal.
4) Final grading, seeding, mulching, fencing, or other site restoration work.
5) The BUYER is responsible for any pipe or appurtenance relocation, and price does NOT include any tank or roof penetration nozzles/boots or relocation of platforms, electrical, etc.
6) Special permits/ Special licenses from federal/state/local agencies and/or related inspection fees, confined space permits, etc... Tanks will need to remain out of service for the duration of recondition process.

LABOR & EQUIPMENT FOR TANK MODIFICATIONS

1) Open-shop, **non-prevailing wage labor**, materials, & tools will be provided by Mid Atlantic Storage Systems, Inc.
2) All LABOR offered in this PROPOSAL will be performed by SELLER, an authorized dealer of CST formally known as Engineered Storage Products Co and A.O. Smith. using our FACTORY CERTIFIED & TRAINED crews regularly engaged in the installation of AQUASTORE® tank systems.

COMPLETION
Varies depending upon weather, crew availability, etc.…

INSURANCE
SELLER has $2 MM Comprehensive General Liability coverage.

BONDS
This PROPOSAL does not include the supply of, or associated cost of a performance and payment bond. If bonds are required please increase the total PRICE of this PROPOSAL by 1.5%.

TAX
Sales or Use Tax is NOT included for this project. (Taxes extra if required.) Please provide Tax Exemption Certificate.

PRICE
The total PRICE for Labor, Materials, and Equipment offered herein is:

Task 1 – $ 72,537 **Task 2 – $ 6,140**

TERMS
The PRICE is to be remitted net 30 days on monthly invoices submitted for materials delivered to the jobsite and work performed during that month. NOTE: a 1.25% monthly (15% annual) service charge will be accessed on past due accounts. Price retainage is not acceptable.

VALIDITY
The PRICE is valid for your written acceptance no later than **November 19, 2025**. Beyond these times **SELLER** reserves the right to revise pricing as necessary.

INDEMNIFICATION
The laws of the state where the Work giving rise to the claim is performed shall apply to Article 1.

TO THE EXTENT PERMITTED BY LAW, THE OWNER SHALL INDEMNIFY, DEFEND AT ITS EXPENSE, AND SAVE THE CONTRACTOR HARMLESS FROM, ANY LIABILITIES, COSTS, AND CLAIMS, INCLUDING JUDGMENTS RENDERED AGAINST, AND FINES AND PENALTIES IMPOSED UPON, THE CONTRACTOR AND REASONABLE ATTORNEYS' FEES AND ALL OTHER COSTS OF LITIGATION (COLLECTIVELY, “LIABILITIES”), ARISING OUT OF THE CONTRACT, INCLUDING INJURIES, DISEASE OR DEATH TO PERSONS, OR PROPERTY DAMAGE, AND ENVIRONMENTAL CLAIMS AND LIABILITIES, CAUSED BY OWNER, ITS EMPLOYEES, AGENTS OR SUBCONTRACTORS, OR IN ANY WAY ATTRIBUTABLE TO THE PERFORMANCE OF THE CONTRACT, EXCEPT THAT THE OWNERS OBLIGATION TO INDEMNIFY THE CONTRACTOR SHALL NOT APPLY TO ANY LIABILITIES ARISING FROM CONTRACTORS SOLE NEGLIGENCE. TO THE EXTENT PROVIDED IN THIS SECTION, THE OWNER AGREES TO INDEMNIFY THE CONTRACTOR FOR LIABILITIES ARISING FROM THE OWNER’S ACTS AND OMISSIONS, NEGLIGENT OR OTHERWISE. OWNER SHALL HAVE THE RIGHT TO SELECT ITS COUNSEL AND TO HAVE COUNSEL SEPARATE FROM THE Contractor, all at the Contractor’s expense.

RESCHEDULING FEE
A $ 2,500 Rescheduling Fee will be applied to any tank recondition project that is cancelled by the tank owner within 7 days of an agreed upon start date. However, this fee will be waived if Mid Atlantic is able to reschedule the rehab crew to another project with no delay in their work schedule.

The above referenced tank is approximately 23 years old.

We appreciate the opportunity to provide you with this PROPOSAL and look forward to your favorable acceptance.

Sincerely,

Ryan Lynch

Ryan Lynch
Inside Service Manager

BUYER ACCEPTANCE
The undersigned accepts this PROPOSAL and all its terms and conditions as a binding contract subject only to the approval of the credit of the BUYER by the SELLER which shall not be unreasonably withheld.

COMPANY: _____

BY:_____ TITLE:_____

SIGNATURE:_____ DATE:_____

CHARLES TOWN UTILITY BOARD

Wednesday, August 27, 2025

Regular Meeting

661 South George Street
Charles Town, WV 25414

CIF Workshop Overview

Attachments:

Summary.pdf
Plant plans.pdf
WTP Upgrade Cost Summary.pdf
End of Useful Life versus Growth Cost for WTP Upgrades.pdf

August 13, 2025 Board Workshop to discuss the Water Treatment Plant Expansion

On August 13, 2025 at 4:30 P.M. the Charles Town Utility Board and several members of the Charles Town City Council attended a workshop at the Charles Town Water Plant to discuss details surrounding the upcoming Water Plant Expansion which is anticipated within the next 5 years.

As demonstrated by an excerpt from the original construction documents (attached) the Charles Town Water Treatment Plant was constructed in 1988 and dedicated in 1990, therefore the original building and the following facilities are all **37 years old**:

- Filters
- Clearwell
- Chemical Feed Systems
- Laboratory
- Control Room
- Office
- Mechanical Room
- Storage Room
- Electrical System
- Raw Water Intake

In 2016, CTUB made several improvements to the Charles Town Water Plant to include the construction of new Flocculation and Sedimentation Basins, High Service Pump Building and 1-million-gallon storage tank. There is also a potential to re-use the existing sludge thickener tank and sludge pumps. This will be evaluated during design. The project cost for these plant upgrades was $5.3 million. These improvements are anticipated to remain and be incorporated into the future plant expansion. These cost savings have been considered in the engineer's recommendation of costs.

According to CTUB's Capitalization Policy all assets of significant value and having a useful life beyond one year are classified into a valuation category, given a life cycle and assigned a value. The Charles Town Water plant includes various valuation categories such as buildings, improvements, equipment and furniture and fixtures. **The life cycle of the Water plant overall is 30 years.** There are three (3) remaining 40-year Bond issues from the 1987/1988 timeframe that have a total remaining to be paid amount of $65,844.92. **Therefore, the Charles Town Water Plant is 7 years beyond its' replacement timeframe today and requires upgrades that are not attributed to growth.**

In addition to the above improvements that are necessary to extend useful life and repair structural deficiencies, recommendations have been made in the most recent Water Treatment Facility Plan Update Dated March 2022 which detail new treatment facility construction improvements including Membrane Filtration, GAC Filtration, UV Disinfection, Chemical Feed, Disinfection, Solids Handling and Piloting all of which are not attributed to growth.

The plant is proposed to be expanded from 2.8 MGD to 5 MGD within the next 5 years. Based on the Engineer's recommendation, the total plant expansion is expected to cost $50 million including soft costs such as engineering, land, legal, permitting, contingency and inflation. **The engineer's cost estimate for required plant upgrades is $18.3 million and the growth-related costs are $21.7 million.**

A summary of the Water Treatment Upgrades is attached along with a breakdown of each upgrade and the required plant upgrade cost versus the growth-related costs. At the workshop on August 13, 2025, an initial Engineer's recommendation of costs was presented. A subsequent review of those costs identified areas within the GAC filtration system that were more equally split between growth and plant upgrades.

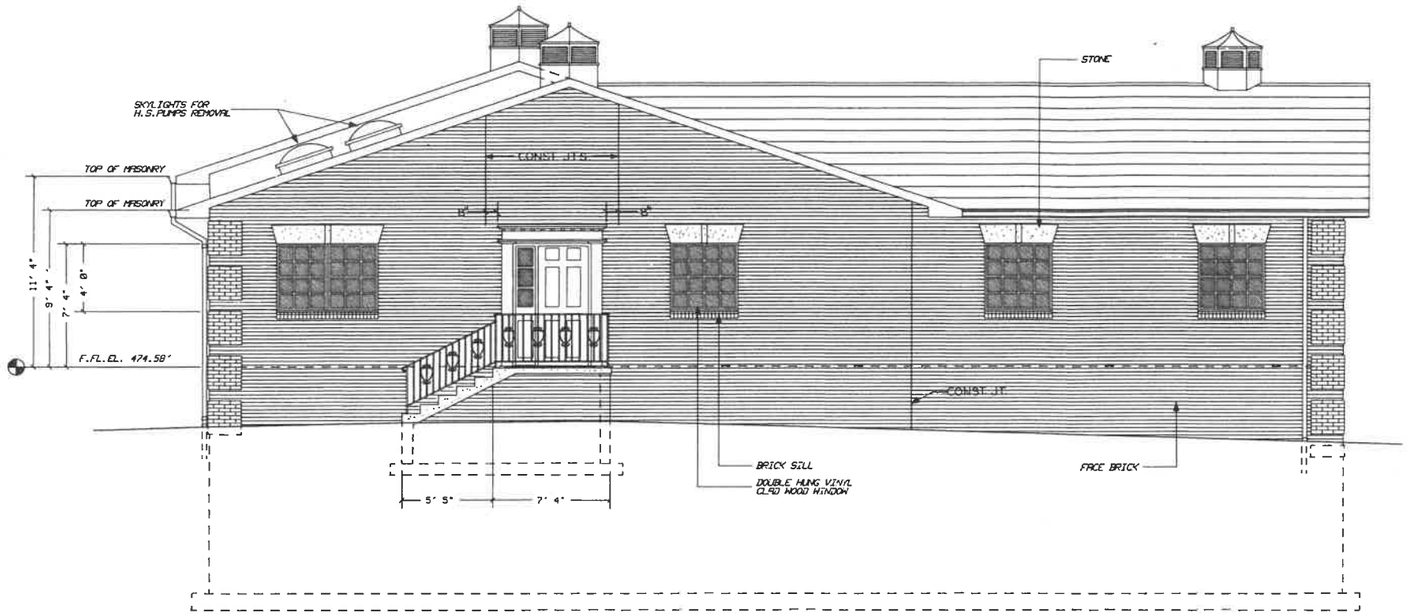

SOUTHEAST ELEVATION

SCALE: 1/4" = 1' 0" (d120246a)

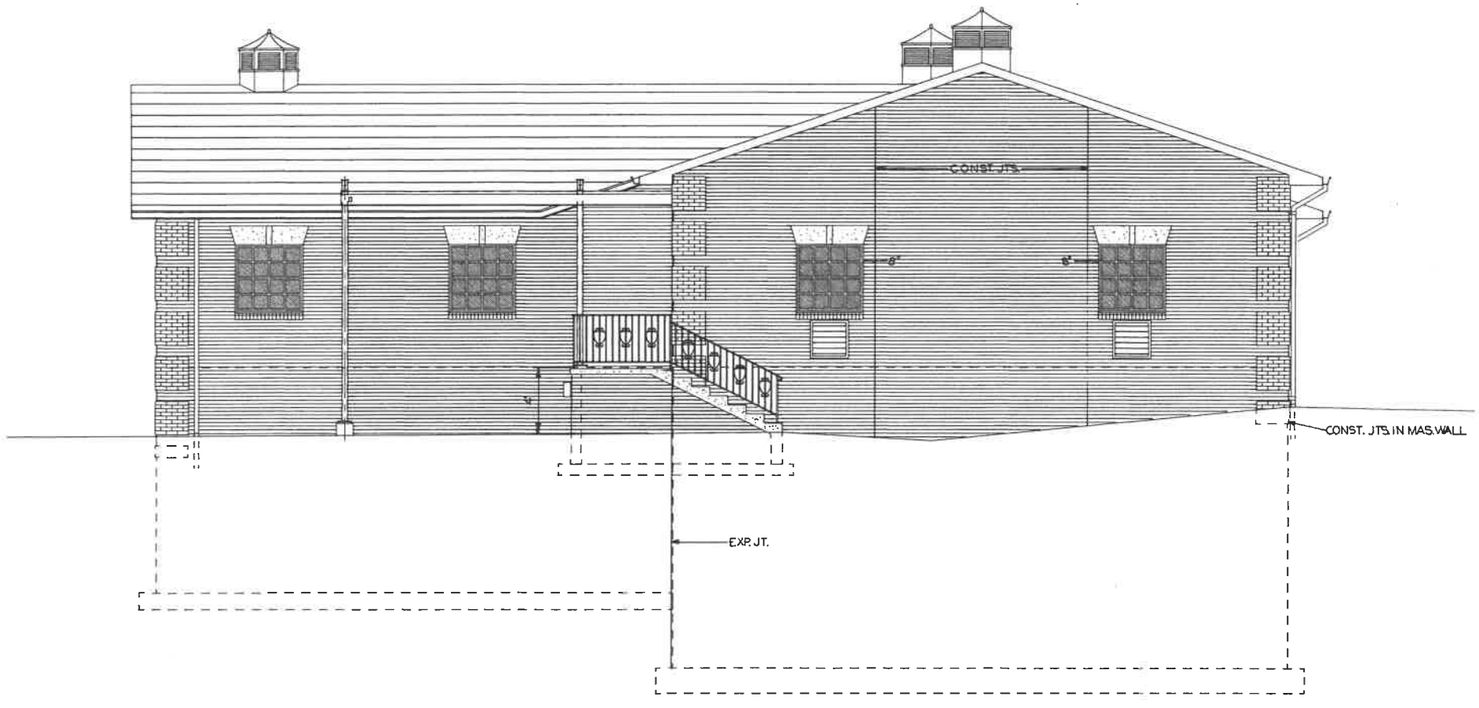

NORTHWEST ELEVATION

SCALE: 1/4" = 1' 0" (d120246b)

© Copyright, 1988, Kelley, Gidley, Blair & Wolfe, Inc.

Rev.	Date	By	Description
3			
2			
1	07/10/90	R.L.P.	RECORD DRAWING

Drawn LA | Checked AK
Drawn | Approved
Scale AS NOTED | Date FEB 1988

Kelley Gidley Blair & Wolfe

Consulting Engineers
550 Eagan Street
Charleston, West Virginia 25301
Charleston Huntington Parkersburg Buckhannon WV

Owner: CITY OF CHARLES TOWN
JEFFERSON COUNTY, WV

Project Title: WATER TREATMENT PLANT

Drawing Title: FILTER / CONTROL BUILDING ELEVATIONS

Project Number: 120200
Revision Number:

Drawing Number: 120245

RECORD DRAWING

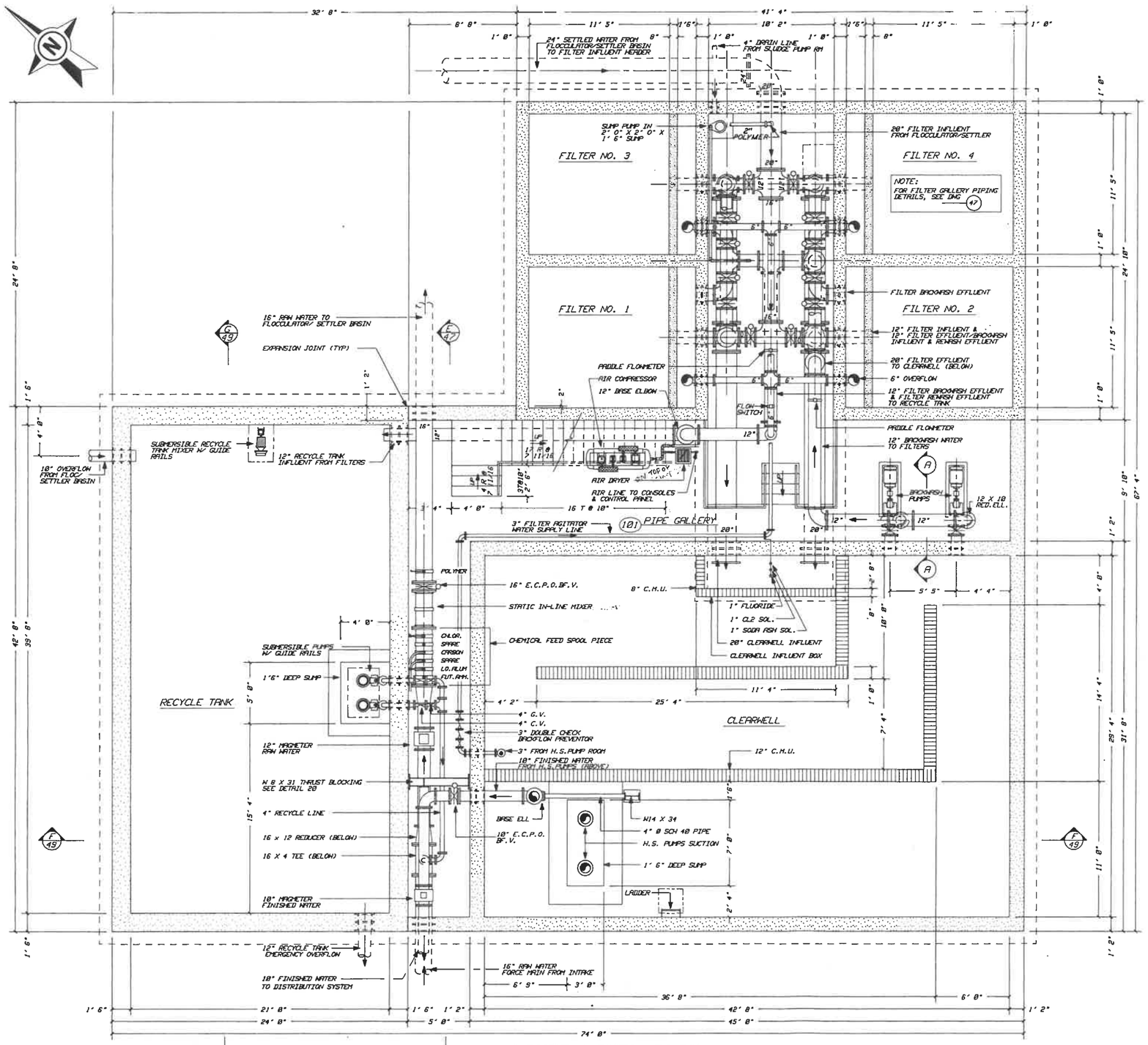

LOWER LEVEL PLAN

SCALE: 1/4" = 1'-0" (d120247a)

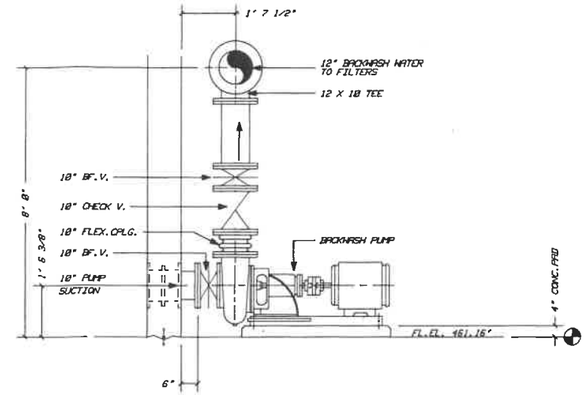

A BACKWASH PUMP SECTION

SCALE: 1/2" = 1'-0" (d120247b)

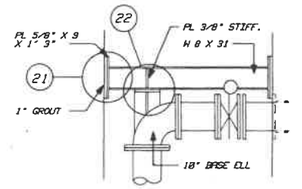

20 THRUST BLOCKING DETAIL

SCALE: 1/2" = 1'-0" (d120247c)

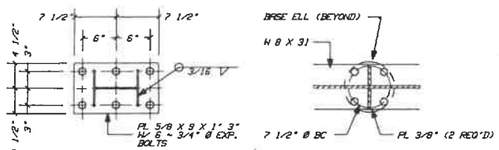

21 W8 TO CONC.

(d120247d)

22 W8 TO BASE ELL

(d120247e)

CONNECTION DETAILS

SCALE: 1" = 1'-0"

Rev.	Date	By	Description
3			
2			
1	07-10-90		RECORD DRAWING

Drawn LA | Checked AK
Drawn | Approved
Scale AS NOTED | Date FEB 1988

Kelley Gidley Blair & Wolfe
Consulting Engineers
550 Eagan Street
Charleston, West Virginia 25301
Charleston Huntington Parkersburg Buckhannon WV

Owner: CITY OF CHARLES TOWN, JEFFERSON COUNTY, WV

Project Title: WATER TREATMENT PLANT

Drawing Title: FILTER / CONTROL BUILDING LOWER LEVEL PLAN

Project Number: 120200 | Revision Number | Drawing Number: 120246

© Copyright, 1988, Kelley, Gidley, Blair & Wolfe, Inc.

RECORD DRAWING

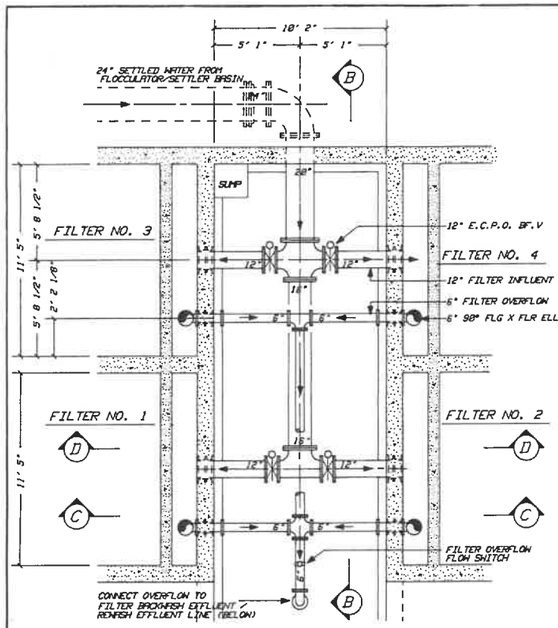

FILTER INFLUENT & OVERFLOW PIPING PLAN

SCALE: 1/4" = 1' 0" (d120251a)

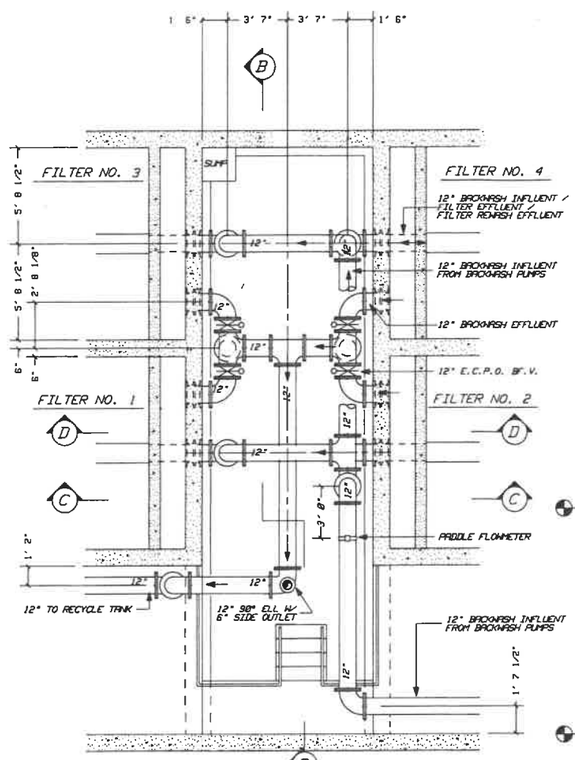

FILTER BACKWASH PIPING PLAN

SCALE: 1/4" = 1' 0" (d120251c)

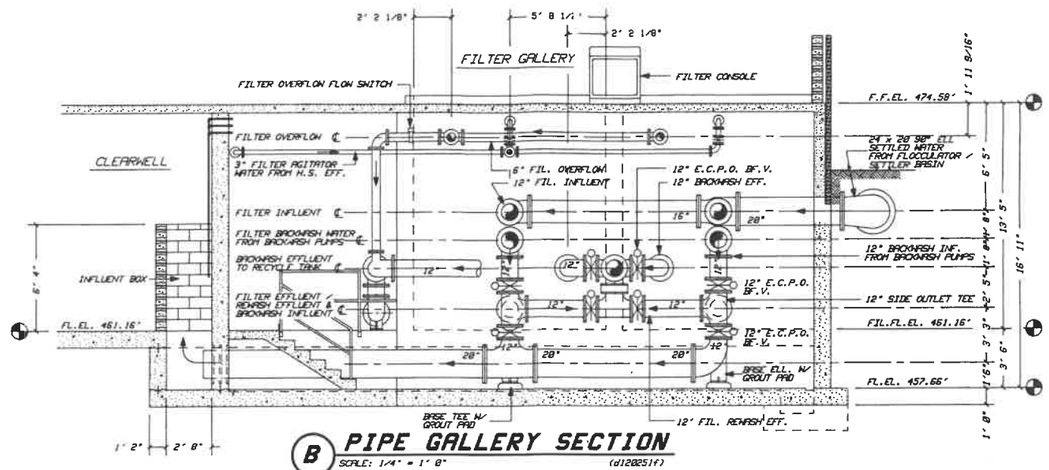

B PIPE GALLERY SECTION

SCALE: 1/4" = 1' 0" (d120251f)

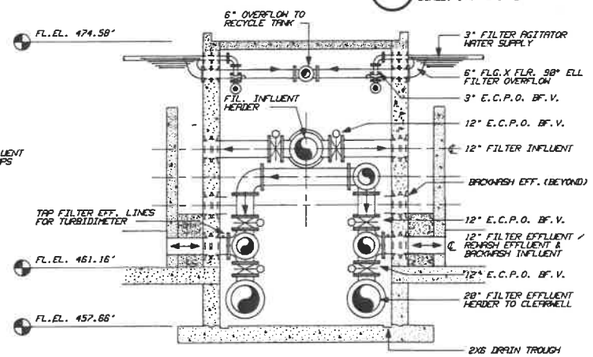

C PIPE GALLERY SECTION

SCALE: 1/4" = 1' 0" (d120251d)

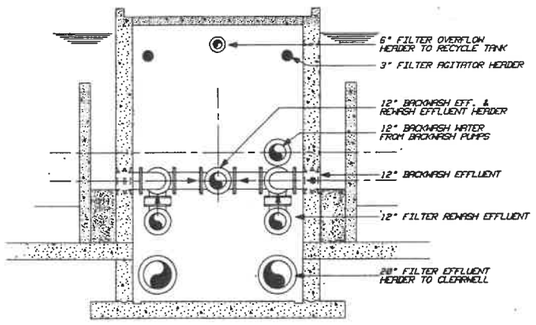

D PIPE GALLERY SECTION

SCALE: 1/4" = 1' 0" (d120251e)

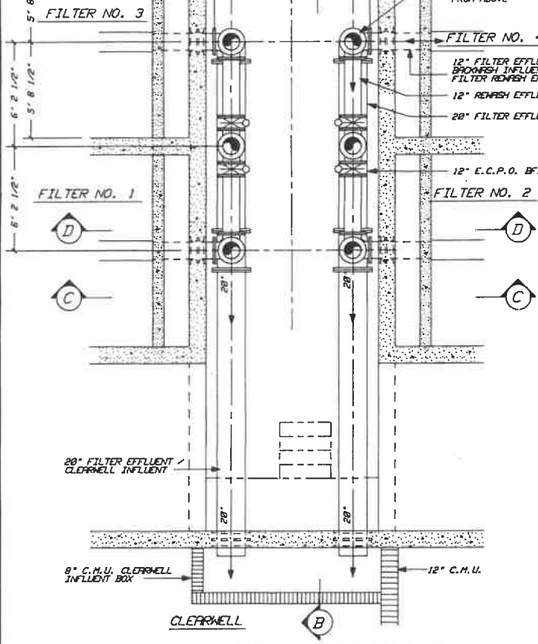

FILTER EFFLUENT PIPING PLAN

SCALE: 1/4" = 1' 0" (d120251b)

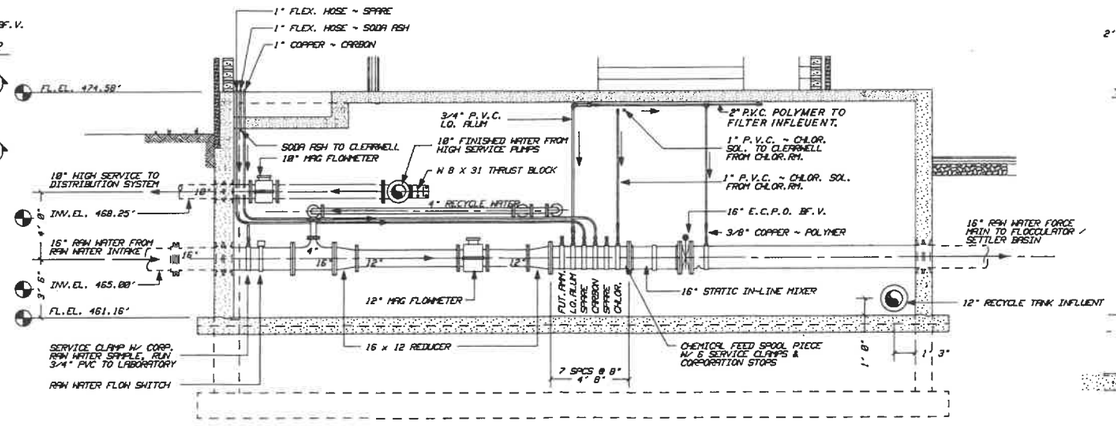

E PIPE GALLERY SECTION

46 SCALE: 1/4" = 1' 0" (d120251g)

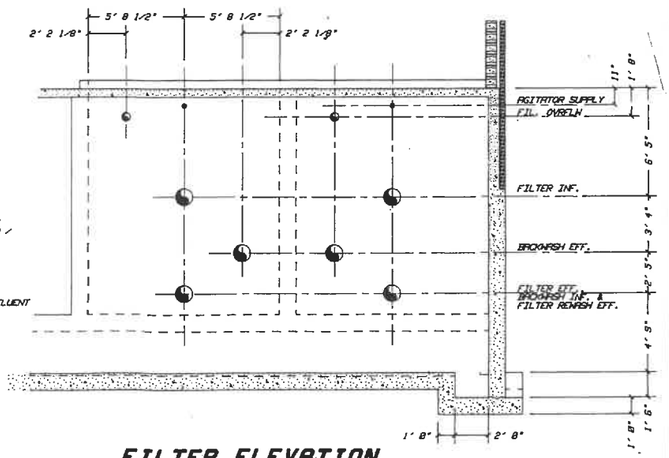

FILTER ELEVATION

SCALE: 1/4" = 1' 0" (d120251h)

NOTE:
PROVIDE PIPING HANGERS, STANCHIONS, ETC. AS REQUIRED PER SPECIFICATIONS

© Copyright, 1988, Kelley, Gidley, Blair & Wolfe, Inc.

Rev.	Date	By	Description
3			
2			
1	07-10-90	R.L.P.	RECORD DRAWING

Drawn LA | Checked AK
Drawn | Approved
Scale AS NOTED | Date FEB 1988

Kelley Gidley Blair & Wolfe
Consulting Engineers
550 Eagan Street
Charleston, West Virginia 25301
Charleston Huntington Parkersburg Buckhannon WV

Owner: CITY OF CHARLES TOWN, JEFFERSON COUNTY, WV

Project Title: WATER TREATMENT PLANT

Drawing Title: FILTER / CONTROL BUILDING LOWER LEVEL PIPING DETAILS

Project Number: 120200
Revision Number:
Drawing Number: 120247

RECORD DRAWING

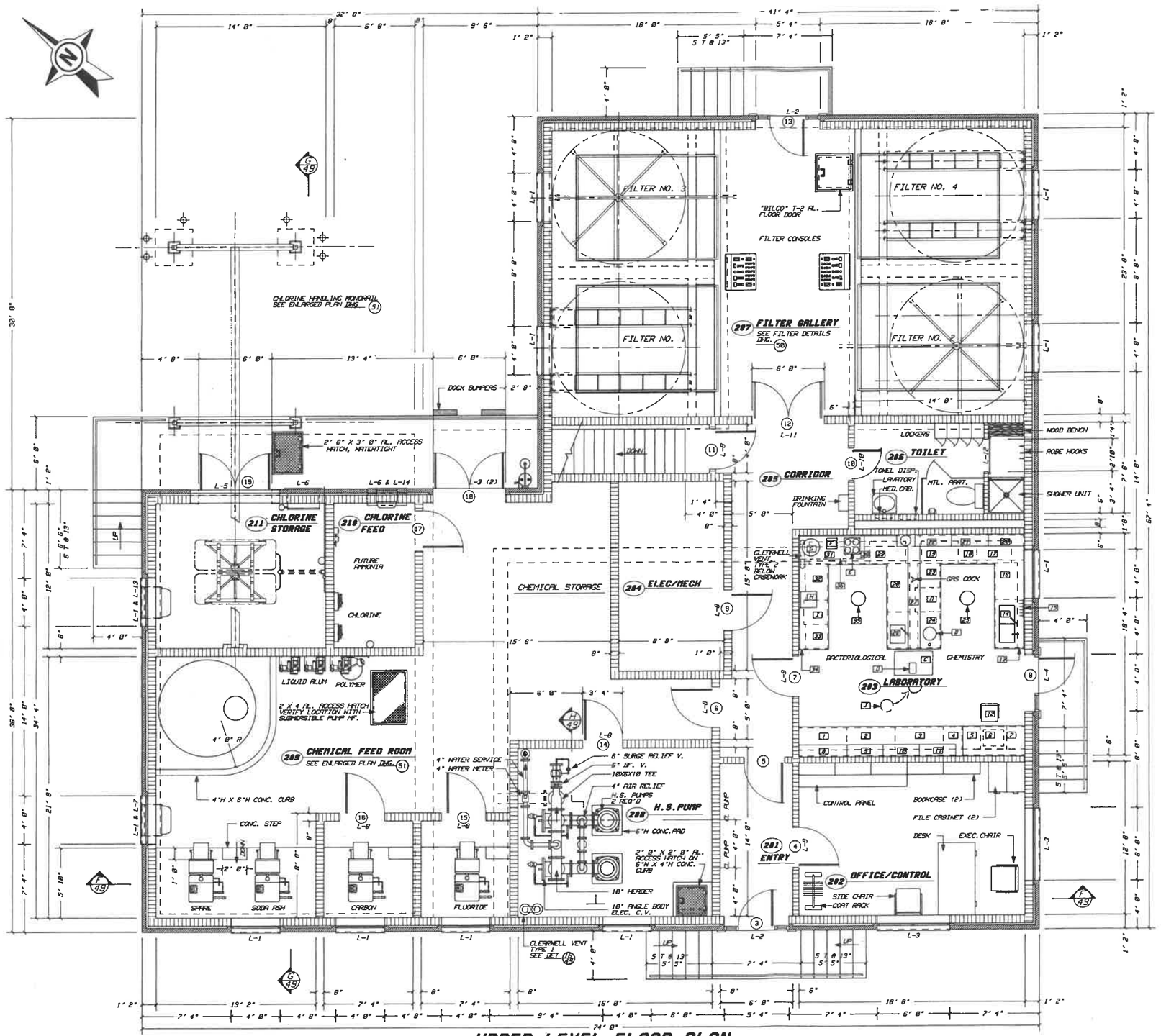

UPPER LEVEL FLOOR PLAN

SCALE: 1/4" = 1' 0" (d120248a)

LABORATORY CASEWORK SCHEDULE

MARK	DESCRIPTION	CAT. NO.	COMMENTS
1	BASE CABINET	106A832	
2	BASE CABINET	248A832	
3	BASE CABINET	173A832	
4	BASE CABINET	139A232	
5	BASE CABINET	120A222	
6	APRON	501A212	W/ 1 DRAWER 26" L."
	KNEESPACE PANEL	616A422	
7	BASE CABINET	120A222	
8	WALL CABINET	718A833	
9	WALL CABINET	718A633	
10	WALL CABINET	718A633	
11	WALL CABINET	718A833	
12	CHAIR	N831010	"COLE BUSINESS FURNITURE"
13	END PANEL	611A732	
14	SINK BASE	112A432	
	DOUBLE BOWL	52L474	
	FAUCET, H & CW	32L406	VAC. BRKR.
	FAUCET	32L386	RAW WATER SAMPLE
	TRAP, P.E.	34L224	
15	PEGBOARD	52L822	
	DRIP TROUGH	52L844	
16	BASE CABINET	208A632	
17	BASE CABINET	X421A632	36" L.
18	BASE CABINET	145A232	
19	BASE CABINET	X420A632	36" L.
20	WALL CABINET	718A633	
21	WALL CABINET	718A633	
22	WALL CABINET	718A633	
23	BASE CABINET	145A432	
24	SINK BASE	109A832	
25	STOOL	950M478	
26	SINK BASE	109A832	
	SINGLE BOWL	52L474	
	FAUCET, H & CW	32L406	VAC. BRKR.
	TRAP, P.E.	34L224	
27	REAGENT SHELF	20L111	
	UPRIGHTS	24L141	
28	BASE CABINET	146A832	
29	BASE CABINET	X421A632	36" L.
30	BASE CABINET.	145A432	
31	BASE CABINET	X420A632	36" L.
32	BASE CABINET	250A632	
33	BASE CABINET	113A432	
34	END PANEL	611A732	
35	STOOL	950M478	
36	CANOPY HOOD	X5545884	2' 6" X 6' 0"

NOTES:
1. All tops shall be Hamilite No. 20L111 unless otherwise noted.
2. Field verify all dimensions.
3. Catalog numbers shown are "Hamilton" wood casework or equal

LABORATORY EQUIPMENT SCHEDULE

MARK	DESCRIPTION	COMMENTS
A	DISHWASHER	
B	EMERGENCY EYEWASH	
C	BALANCE TABLE	N.I.C.(BY OWNER)
D	PERCENT MOISTURE BALANCE	N.I.C.(BY OWNER)
E	WATER BATH	N.I.C.(BY OWNER)
F	HOT PLATE	N.I.C.(BY OWNER)
G	STERTILIZER	N.I.C.(BY OWNER)
H	INCUBATOR	N.I.C.(BY OWNER)
I	REFRIGERATOR, UNDERCOUNTER	
J	SAFETY SHOWER	

© Copyright, 1988, Kelley, Gidley, Blair & Wolfe, Inc.

Rev.	Date	By	Description
3			
2			
1	07 10 90	R.L.P.	RECORD DRAWING

Drawn LA | Checked AK | Drawn | Approved | Scale AS NOTED | Date FEB 1988

Kelley Gidley Blair & Wolfe
Consulting Engineers
550 Eagan Street
Charleston, West Virginia 25301
Charleston Huntington Parkersburg Buckhannon WV

Owner: CITY OF CHARLES TOWN
JEFFERSON COUNTY, WV

Project Title: WATER TREATMENT PLANT

Drawing Title: FILTER / CONTROL BUILDING UPPER LEVEL PLAN

Project Number: 120200
Revision Number:
Drawing Number: 120248

RECORD DRAWING

Raw Water Intake

- Existing building is over 35 years old. Pumps have been re-built (bearings) but are original.
- Only have a single tee screen and intake supply line from river.
- Backwash must be done daily, manually from station.
- Room is small and piping configuration is less than ideal.
- Not enough room for a dual compressor automatic airburst system.
- No secondary screen or barrier to protect existing screen.
- Consider parallel main to WTP.

GD&F recommends constructing an entire new river intake structure with dual screens, supply lines, knife gate valves, compressors, etc.

Estimated cost is $5.0M

Filters

- Filters and building constructed in 1989, both have reached the end of their useful life
- Air scour system has not worked properly for years.
- Recent inspection by filter media provider yielded concerns over lack of backwash rate needed to properly fluidize the bed.
- Media replaced in 2017 but needs topped off yearly.
- Piping/valves very difficult to access.

GD&F recommends replacing existing conventional filters with membrane filters which provide a physical barrier type of filtration. Estimated cost is $6.5M. Room can be left for a future membrane skid.

Floc and Sed Basin

- Existing flocc and sed undersized by volume. Does not consistently produce settled turbidity under 1.0 NTU.
- Tube settlers and basin sludge is difficult to clean and maintain. Requires a lot of water to get vacuum sludge collection system to work.
- Basin do not have drains or slopped bottoms.

GD&F recommends installing a new 5.0 MGD capacity floc and sed basin for a minimum of 4 hours of detention time. Estimated cost is $4.5M

GAC Filtration

- This would be a completely new treatment process.
- Specifically, to reduce DBP's in the system and potential future PFAS, EDCs, Pharmaceuticals and personal care products.
- Should help to eliminate need for ammonia/chloramination process.

Estimated construction cost is $4.0M. Could leave room for future GAC units.

Clearwell

- Old clearwell is undersized and obsolete. A new below grade baffled clearwell should be provided rated for up to 5 MGD. The existing 1 MG clearwell can be re-used to reduce the size of the new clearwell.

Estimated construction cost is $2.5M

High Service Pumps

- The existing high service pump building and piping can remain. There is already space for a third pump. By adding a 3rd pump, you would get over 5 MGD with unit redundancy.

Estimated construction cost is $0.5M

Chemical Feed Systems

- All existing chemical feed systems have reached the end if their useful life and should be replaced with new bulk tanks, day tanks, scales, secondary containment, dual chemical feed pumps, valves, etc.

Estimated construction cost is $2.5M

New Laboratory/Control Room/Office/Rest Room/Mechanical Room/Storage

- All existing rooms shall be replaced that are currently located inside existing WTP including all furnishes, HVAC, plumbing and electrical.

Estimated construction cost is $2.0M

New SCADA System and Electrical

- The existing SCADA system should be replaced including all panelboards, MCC's, transformers, generator, etc.

Estimated construction cost is $5.5M

New Waste Handling

- The existing floc/sed basins and thickener could potentially be utilized for a new waste handling system.
- Major modifications would be necessary and the existing plant would have to be kept in service.

Estimated construction cost is $1.5M

Site Work

- All new site piping, paving, stabilized surfaces, sidewalks, stormwater management, grading, would be required.

Estimated construction cost is $4.0M

Interior Plant Piping, Instrumentation and Accessories

- All new plant mechanical and process piping, instrumentation and accessories

Estimated construction cost is $1.5M

Original as presented at Workshop on August 13, 2025

CTUB Water Treatment Plant Upgrade - Required Versus Growth Related Cost Calculation					
Construction Item	**Total Construction Cost ($M)**	**Required Plant Upgrades Cost ($M)**	**Percent Attributed to Required Plant Upgrades (%)**	**Growth Related Cost ($M)**	**Percent Attributed to Growth (%)**
Raw Water Intake	$5.0	$2.0	40%	$3.0	60%
Filters	$6.5	$4.5	69%	$2.0	31%
Floc and Sed Basins	$4.5	$1.5	33%	$3.0	67%
GAC Filtration	$4.0	$3.2	80%	$0.8	20%
Clearwell	$2.5		0%	$2.5	100%
High Service Pumps	$0.5		0%	$0.5	100%
Chemical Feed Systems	$2.5	$2.0	80%	$0.5	20%
New Rooms in Plant	$2.0	$2.0	100%		0%
New SCADA and Electrical	$5.5	$2.0	36%	$3.5	64%
New Waste Handling	$1.5	$0.5	33%	$1.0	67%
Site Work	$4.0	$1.0	25%	$3.0	75%
Interior Plant Piping and Acc.	$1.5	$1.0	67%	$0.5	33%
Total:	**$40.0**	**$19.7**	**49%**	**$20.3**	**51%**

Engineer's Recommendations: The total probable construction cost for the water treatment upgrades is $40 million. Of this total construction cost, GD&F estimates 51% to be attributed to growth and 49% attributed to required upgrades. A total of $50 million should be included in the CIP to account for soft costs such as engineering, land, legal, permitting, contingency and inflation.

Revised by Chris Eckenrode on 8/15/2025

CTUB Water Treatment Plant Upgrade - Required Versus Growth Related Cost Calculation					
Construction Item	**Total Construction Cost**	**Required Plant Upgrades Cost ($M)**	**Percent Attributed to Required Plant**	**Growth Related Cost ($M)**	**Percent Attributed to Growth (%)**
Raw Water Intake	$5.0	$2.0	40%	$3.0	60%
Filters	$6.5	$4.5	69%	$2.0	31%
Floc and Sed Basins	$4.5	$1.5	33%	$3.0	67%
GAC Filtration	$4.0	$1.8	45%	$2.2	55%
Clearwell	$2.5		0%	$2.5	100%
High Service Pumps	$0.5		0%	$0.5	100%
Chemical Feed Systems	$2.5	$2.0	80%	$0.5	20%
New Rooms in Plant	$2.0	$2.0	100%		0%
New SCADA and Electrical	$5.5	$2.0	36%	$3.5	64%
New Waste Handling	$1.5	$0.5	33%	$1.0	67%
Site Work	$4.0	$1.0	25%	$3.0	75%
Interior Plant Piping and Acc.	$1.5	$1.0	67%	$0.5	33%
Total:	**$40.0**	**$18.3**	**46%**	**$21.7**	**54%**

Engineer's Recommendations: The total probable construction cost for the water treatment upgrades is $40 million. Of this total construction cost, GD&F estimates 51% to be attributed to growth and 49% attributed to required upgrades. A total of $50 million should be included in the CIP to account for soft costs such as engineering, land, legal, permitting, contingency and inflation.

CHARLES TOWN UTILITY BOARD

Wednesday, August 27, 2025

Regular Meeting

661 South George Street
Charles Town, WV 25414

CIP and CIF Review

Attachments:

FY26 - CIF Study CIP Plan 08.22.25 Rev1.pdf
FY26 - CIF Study CIP Plan 08.22.25 Rev2.pdf
CTUB 2025 CIF Slides.pdf

Charles Town Utility Board
Capital Improvement Plan FY26
Approved May 29, 2025

Revised: May 29, 2025, Approved June 11, 2025

Water Treatment and Distribution System Capital Improvement Projects					
Project Number	**Project Name**	**Department**	**Phase A - 2024-2026**	**Phase B - 2027-2028**	**Phase C - 2029-2032**
Main Zone Improvements					
PR-MZ-01	Charles Town RaceTrack	Water	$ 88,000.00		
PR-MZ-02	Fritts & Old Town Ranson	Water		$ 647,500.00	
PR-MZ-04	Church Street	Water	$ 595,000.00		
PR-MZ-05	South George Street	Water	$ 279,000.00		
PR-MZ-06	Water Street	Water			$ 240,000.00
PR-MZ-07	Route 340	Water		$ 1,200,000.00	
PR-MZ-16	West Academy Tie	Water	$ 88,000.00		
Total Main Zone Improvements			**$ 1,050,000.00**	**$ 1,847,500.00**	**$ 240,000.00**
Northern High Zone Improvements					
PR-NZ-05	East 10th Street	Water	$ 298,000.00		
PR-NZ-06	Burns Street PS Upgrade	Water		$ 1,175,333.33	
Total Northern High Zone Improvements			**$ 298,000.00**	**$ 1,175,333.33**	**$ -**
Huntfield Zone Improvements					
PR-HZ-01	Augustine Avenue PS Discharge	Water		$ 298,000.00	
PR-HZ-05	Augustine Avenue PS Upgrade	Water		$ 780,000.00	
Total Huntfield Zone Improvements			**$ -**	**$ 1,078,000.00**	**$ -**
Water Treatment Plant and Associated Projects					
PR-WTP-01	Well Development/Spring Source Construction	Water			$ 1,614,900.00
PR-WTP-02	WTP Chlorine Room Upgrades	Water	$ 401,910.00		
PR-WTP-04	WTP Sludge Forcemain/Pump Station	Water	$ 915,588.00		
PR-WTP-05	Intake Construction Cost	Water			$ 1,265,000.00
PR-WTP-06	WTP Upgrade	Water			$ 40,000,000.00
Total Huntfield Zone Improvements			**$ 1,317,498.00**	**$ -**	**$ 42,879,900.00**
Water Capital Project Improvements		**Total**	**$ 2,665,498.00**	**$ 4,100,833.33**	**$ 43,119,900.00**

Wastewater Treatment and Collection System Capital Improvement Projects					
Project Number	**Project Name**	**Department**	**Phase A - 2024-2026**	**Phase B - 2027-2028**	**Phase C - 2029-2032**
Wastewater Treatment Plant Projects					
PR-WW-01	Renewal and Replacement Project	Sewer	$ 12,131,815.92	$ -	$ -

PR-WW-02	CTWWTP Upgrades and Expansion	Sewer	$ 55,000.00	$ -	$ 40,000,000.00
PR-WW-03	Blu-Nite Sand Filters @ CTWWTP	Sewer	$ 200,000.00	$ -	$ -
Total Wastewater Treatment Plant Projects			**$ 12,386,815.92**	**$ -**	**$ 40,000,000.00**
Collection System Projects					
PR-CS-01	Collection System Project	Sewer	$ 7,665,544.00	$ -	$ -
PR-CS-02	Flowing Springs Pump Station Upgrade	Sewer	$ -	$ 1,000,000.00	$ -
PR-CS-03	Greenfield Forcemain & Pump Station Upgrades	Sewer	$ 1,360,000.00	$ -	$ -
PR-CS-04	Cantor Hollow Pump Station	Sewer	$ 145,000.00	$ -	$ -
PR-CS-05	Asbury Church Area - Sewer Main Replacement	Sewer	$ 1,215,146.00	$ -	$ -
PR-CS-06	Fairfax Crossing Parallel Line/Collector Projects	Sewer	$ -	$ 2,500,000.00	$ -
PR-CS-07	Collections System Upgrade	Sewer	$ -	$ 3,000,000.00	$ -
PR-CS-08	Collections Pump Stations Project	Sewer	$ -	$ -	$ 3,500,000.00
Total Collection System Projects			**$ 10,385,690.00**	**$ 6,500,000.00**	**$ 3,500,000.00**
Wastewater Capital Project Improvement Projects		**Total**	**$ 22,772,505.92**	**$ 6,500,000.00**	**$ 43,500,000.00**

General Facilities Maintenance					
Project Number	**Project Name**	**Department**	**Phase A - 2024-2026**	**Phase B - 2027-2028**	**Phase C - 2029-2032**
	Maintenance Building	Water/Sewer	$ 935,000.00	$ -	$ -
General Facilities Maintenance		**Total**	**$ 935,000.00**	**$ -**	**$ -**

Charles Town Utility Board
Capital Improvement Plan FY26
Revised June 25, 2025

Revised: June 25, 2025, Approved per discussion with Chris Eckenrode to increase Treatment Plant Expansion costs from $40 Million to $50 Million to include soft costs for engineering, land, legal, permitting, contingency and inflation.

Water Treatment and Distribution System Capital Improvement Projects					
Project Number	**Project Name**	**Department**	**Phase A - 2024-2026**	**Phase B - 2027-2028**	**Phase C - 2029-2032**
Main Zone Improvements					
PR-MZ-01	Charles Town RaceTrack	Water	$ 88,000.00		
PR-MZ-02	Fritts & Old Town Ranson	Water		$ 647,500.00	
PR-MZ-04	Church Street	Water	$ 595,000.00		
PR-MZ-05	South George Street	Water	$ 279,000.00		
PR-MZ-06	Water Street	Water			$ 240,000.00
PR-MZ-07	Route 340	Water		$ 1,200,000.00	
PR-MZ-16	West Academy Tie	Water	$ 88,000.00		
Total Main Zone Improvements			**$ 1,050,000.00**	**$ 1,847,500.00**	**$ 240,000.00**
Northern High Zone Improvements					
PR-NZ-05	East 10th Street	Water	$ 298,000.00		
PR-NZ-06	Burns Street PS Upgrade	Water		$ 1,175,333.33	
Total Northern High Zone Improvements			**$ 298,000.00**	**$ 1,175,333.33**	**$ -**
Huntfield Zone Improvements					
PR-HZ-01	Augustine Avenue PS Discharge	Water		$ 298,000.00	
PR-HZ-05	Augustine Avenue PS Upgrade	Water		$ 780,000.00	
Total Huntfield Zone Improvements			**$ -**	**$ 1,078,000.00**	**$ -**
Water Treatment Plant and Associated Projects					
PR-WTP-01	Well Development/Spring Source Construction	Water			$ 1,614,900.00
PR-WTP-02	WTP Chlorine Room Upgrades	Water	$ 401,910.00		
PR-WTP-04	WTP Sludge Forcemain/Pump Station	Water	$ 915,588.00		
PR-WTP-05	Intake Construction Cost	Water			$ 1,265,000.00
PR-WTP-06	WTP Upgrade	Water			$ 50,000,000.00
Total Huntfield Zone Improvements			**$ 1,317,498.00**	**$ -**	**$ 52,879,900.00**
Water Capital Project Improvements		**Total**	**$ 2,665,498.00**	**$ 4,100,833.33**	**$ 53,119,900.00**

Wastewater Treatment and Collection System Capital Improvement Projects					
Project Number	**Project Name**	**Department**	**Phase A - 2024-2026**	**Phase B - 2027-2028**	**Phase C - 2029-2032**
Wastewater Treatment Plant Projects					

PR-WW-01	Renewal and Replacement Project	Sewer	$ 12,131,815.92	$ -	$ -
PR-WW-02	CTWWTP Upgrades and Expansion	Sewer	$ 55,000.00	$ -	$ 50,000,000.00
PR-WW-03	Blu-Nite Sand Filters @ CTWWTP	Sewer	$ 200,000.00	$ -	$ -
Total Wastewater Treatment Plant Projects			**$ 12,386,815.92**	**$ -**	**$ 50,000,000.00**
Collection System Projects					
PR-CS-01	Collection System Project	Sewer	$ 7,665,544.00	$ -	$ -
PR-CS-02	Flowing Springs Pump Station Upgrade	Sewer	$ -	$ 1,000,000.00	$ -
PR-CS-03	Greenfield Forcemain & Pump Station Upgrades	Sewer	$ 1,360,000.00	$ -	$ -
PR-CS-04	Cantor Hollow Pump Station	Sewer	$ 145,000.00	$ -	$ -
PR-CS-05	Asbury Church Area - Sewer Main Replacement	Sewer	$ 1,215,146.00	$ -	$ -
PR-CS-06	Fairfax Crossing Parallel Line/Collector Projects	Sewer	$ -	$ 2,500,000.00	$ -
PR-CS-07	Collections System Upgrade	Sewer	$ -	$ 3,000,000.00	$ -
PR-CS-08	Collections Pump Stations Project	Sewer	$ -	$ -	$ 3,500,000.00
Total Collection System Projects			**$ 10,385,690.00**	**$ 6,500,000.00**	**$ 3,500,000.00**
Wastewater Capital Project Improvement Projects		**Total**	**$ 22,772,505.92**	**$ 6,500,000.00**	**$ 53,500,000.00**

General Facilities Maintenance					
Project Number	**Project Name**	**Department**	**Phase A - 2024-2026**	**Phase B - 2027-2028**	**Phase C - 2029-2032**
	Maintenance Building	Water/Sewer	$ 935,000.00	$ -	$ -
General Facilities Maintenance		**Total**	**$ 935,000.00**	**$ -**	**$ -**

Charles Town Utility Board

Capacity Improvement Fee Study

Revised August 21, 2025

RAFTELIS

Capacity Improvement Fees Overview

- Capacity Improvement (often called “Impact” or “System Development”) Fees are **one-time** charges assessed to new customers for their use of system capacity.
  - Equitable method of recovering up-front system capacity costs from users

- Fees must comply with the Rational Nexus test established in court cases
  - The need for capacity charges is a result of new growth
  - The charges do not exceed the reasonable cost
  - Fees must be adequately earmarked for sufficient benefit for new customers

Current Fees

- Capacity Improvement Fees are upfront fees paid by developers (not recurring monthly charges paid by customers)
- Current fees were implemented in 2022.
- Current Water Connection Fee is $4,399 for each residential or non-residential connection
- Current Sewer Connection Fee is $2,930 for each residential or non-residential connection

Capacity Improvement Fee Methodologies

Buy-in	• **Backward-looking** • Used when there is facility capacity to serve current and future development • Unit cost of capacity for new development
Incremental	• **Forward-looking** • Future facilities that add capacity for new development • When existing system has little or no capacity for new development
Combined	• **Backward and forward-looking** • Current and future facilities • Combined facilities to serve current and future development

Criteria for CIFs

- Historical Customer growth
- Likelihood of future customer growth
  - › 2% or more per year or 20% over 10 years
- Depletion of system capacity
  - › Must run out of reserve capacity within next 5-7 years
- CIF must be based on cost of future capacity
  - › CIF charges should not be used to pay for existing capacity
  - › Only applies to new homes added by developer systems and the collection is required at the time permits are received





Overview of Fee Calculation

1. Examine asset value of existing assets, and calculate Replacement Cost New Less Depreciation. Identify and remove contributed and donated assets.
2. Examine Capital Improvement Plan (CIP) to determine Projects related to Growth
3. Identify Growth $ based on allocations provided by Utility
4. Remove principal of existing debt
5. Calculate Debt Credit for any planned future borrowing supporting growth
6. Divide Net System Value into Capacity
7. Derive Cost per Gallon per Day
8. Derive Capacity Improvement Fee per residential service unit

Water Growth Related CIP

Water Growth Related CIP		Total Cost	Growth %		Total Cost Included
Charles Town RaceTrack	$	88,000	50%	$	44,000
Fritts & Old Town Ranson		647,500	100%		647,500
Church Street		595,000	70%		416,500
South George Street		279,000	30%		83,700
Water Street		240,000	30%		72,000
Route 340		1,200,000	50%		600,000
West Academy Tie		88,000	30%		26,400
East 10th Street		298,000	30%		89,400
Burns Street PS Upgrade		1,175,333	50%		587,667
Augustine Avenue PS Discharge		298,000	50%		149,000
Augustine Avenue PS Upgrade		780,000	50%		390,000
Well Development/Spring Source Construction		1,614,900	50%		807,450
WTP Upgrade 1		50,000,000	54%		27,000,000
Total Water Growth Projects	**$**	**57,303,733**		**$**	**30,913,617**

Sewer Growth Related CIP

Sewer Growth Related CIP		Total Cost	Growth %		Total Cost Included
Renewal and Replacement Project	$	10,165,786	10%	$	1,016,579
CTWWTP Upgrades and Expansion 1		55,000	70%		38,500
CTWWTP Upgrades and Expansion 2		50,000,000	55%		27,500,000
Collection System Project		6,088,544	60%		3,653,126
Flowing Springs Pump Station Upgrade		1,000,000	70%		700,000
Greenfield Forcemain & Pump Station Upgrades		1,360,000	100%		1,360,000
Fairfax Crossing Parallel Line/Collector Projects		2,500,000	100%		2,500,000
Collections System Upgrade		3,000,000	70%		2,100,000
Collections Pump Stations Project		3,500,000	70%		2,450,000
Total Water Growth Projects	**$**	**77,669,330**		**$**	**41,318,205**

Water Cost of Capital Projects

- Calculate RCNLD of Core Assets
- Identified growth related projects for CTUB's approved CIP.
- Assumed future capital is funded for certain projects (Water Treatment Plant Expansion).
- Remove principal of current debt and net present value of projected principal.

Incremental Amount	
Growth Related Capital Projects	$30,913,617
Less: NPV of Projected Bond Principal	$(10,919,464)
Costs of Expansion to be Recovered	**$19,994,156**

Combined Amount	
Core Assets	$34,543,077
Less: Donated and Contributed Assets	$(1,704,287)
Less: Non-Core Assets	$(1,471,766)
Growth Related Capital Projects	$30,913,617
Less: Outstanding Principal	$(14,055,616)
Less: NPV of Projected Bond Principal	$(10,919,461)
Costs of Expansion to be Recovered	**$37,305,564**

Water Project Cost Per Unit

Incremental	Cost
Cost of Expansion to be Recovered	$19,994,1456
Total Capacity Added (MGD)	2.20
Cost per Gallon per Day (GPD)	$9.09

Combined	Cost
Costs of Expansion to be Recovered	$37,305,564
Water System Capacity (MGD)	2.80
Plus: Added Capacity in Future CIP	2.20
Total System Capacity (MGD)	5.00
Cost per Gallon per Day	$7.46

Sewer Cost of Capital Projects

- Calculate RCNLD of Core Assets
- Identified growth related projects for CTUB's approved CIP.
- Assumed future capital is funded for certain projects (WW Treatment Plant Expansion).
- Remove principal of current debt and net present value of projected principal.

Incremental Amount	
Growth Related Capital Projects	$41,318,205
Less: NPV of Projected Bond Principal	$(6,744,692)
Costs of Expansion to be Recovered	**$34,573,513**

Combined Amount	
Core Assets	$74,285,137
Less: Donated and Contributed Assets	$(25,576,785)
Less: Non-Core Assets	$(856,640)
Growth Related Capital Projects	$41,318,205
Less: Outstanding Principal	$(29,564,685)
Less: NPV of Projected Bond Principal	$(6,744,692)
Costs of Expansion to be Recovered	**$52,860,541**

Sewer Project Cost Per Unit

Incremental	Cost
Cost of Expansion to be Recovered	$34,573,513
Total Capacity Added (MGD)	2.75
Cost per Gallon per Day (GPD)	$12.57

Combined	Cost
Costs of Expansion to be Recovered	$52,860,541
Water System Capacity (MGD)	2.25
Plus: Added Capacity in Future CIP	2.75
Total System Capacity (MGD)	5.00
Cost per Gallon per Day	$10.57

SFR Capacity Improvement Fee

Incremental	Cost
Water (GPD)	$1,909
Sewer (GPD)	$2,640

Combined	Cost
Water (GPD)	$1,567
Sewer (GPD)	$2,220

- Water and sewer CIF scaling done based on CTUB's published tariff conversion chart, which is based on the West Virginia Department of Health design standards.
- The fees shown are for a single-family residential house with an average of 3 people.


Q&A

RAFTELIS

Thank you!

Contact:
Mihaela Coopersmith / mcoopersmith@raftelis.com
Ben Heaton / bheaton@raftelis.com

CHARLES TOWN UTILITY BOARD

Wednesday, August 27, 2025

Regular Meeting

661 South George Street
Charles Town, WV 25414

Utility Manager Report

CHARLES TOWN UTILITY BOARD

Wednesday, August 27, 2025

Regular Meeting

661 South George Street
Charles Town, WV 25414

Chairman Report

CHARLES TOWN UTILITY BOARD

Wednesday, August 27, 2025

Regular Meeting

661 South George Street
Charles Town, WV 25414

August 13, 2025

Attachments:

Board Report 08.27.25.pdf

Totals by Year-Fund

Fund Description	Fund	Expend Total	Revenue Total	G/L Total	Total
Water	**6-50**	**$103,422.02**	**$0.00**	**$113,038.71**	**$216,460.73**
Sewer	**6-60**	**$61,878.32**	**$0.00**	**$140,209.35**	**$202,087.67**
Total Of All Funds:		**$165,300.34**	**$0.00**	**$253,248.06**	**$418,548.40**

Totals by Fund

Fund Description	Fund	Expend Total	Revenue Total	G/L Total	Total
Water	**50**	**$103,422.02**	**$0.00**	**$113,038.71**	**$216,460.73**
Sewer	**60**	**$61,878.32**	**$0.00**	**$140,209.35**	**$202,087.67**
Total Of All Funds:		**$165,300.34**	**$0.00**	**$253,248.06**	**$418,548.40**

TOTAL PAGES: 5

APPROVED BY: _____

APPROVED BY: _____

This Packet:	$ 418,548.40
City of Charles Town, check dated 8/14/2025:	22,679.78
Corporation of Ranson, check dated 8/14/2025:	4,645.09
Security Deposit Refund, check dated 8/14/2025:	700.43
Metlife, check dated 8/21/2025:	1,840.97
Security Deposit Refunds, checks dated 8/27/2025:	859.30
Total:	$ 449,273.97

Charles Town Utility Board
Purchase Order Listing By Vendor Name

Vendor # / P.O. #	PO Date	*Name* / Description	Status	Amount	Void Amount	Contract	PO Type
WVDEP005		WV DEPT OF HEALTH & HUMAN	*Account Continued*				
26-00258	08/12/25	BACTERIOLOGICAL TEST	Open	$115.00	$0.00		
26-00268	08/14/25	BACTERIOLOGICAL TEST	Open	$230.00	$0.00		
26-00269	08/18/25	FLOURIDE TEST	Open	$20.00	$0.00		
			Vendor Total:	**$365.00**			
WVWAT005		WV WATER DEVELOPMENT AUTH					
26-00272	08/27/25	#2017-175 INFRSTRCTR FNDPRJCT	Open	$1,253.82	$0.00		

Total Purchase Orders: 68 Total P.O. Line Items: 0 Total List Amount: $418,548.40 Total Void Amount: $0.00

Vendor # / P.O. #	PO Date	*Name* / Description	Status	Amount	Void Amount	Contract	PO Type
KAYCA005		KAY CASTO & CHANEY PLLC	*Account Continued*				
26-00265	08/12/25	WVAW: THRU 7/31/25	Open	$11,014.24	$0.00		
26-00266	08/12/25	CIF: THRU 7/31/25	Open	$942.50	$0.00		
			Vendor Total:	**$19,334.24**			
MISSU005		MISS UTILITY OF WV, INC.					
26-00248	08/08/25	MESSAGE FEES: JUL	Open	$599.85	$0.00		
PREMI015		PREMIER CONTRACTING LLC					
26-00249	08/14/25	PH SEWER MANHOLE	Open	$1,670.00	$0.00		
PREMI010		PREMIER RISK MANAGEMENT SOLUTI					
26-00250	08/12/25	SFTY CNSLTNG: 7/01 - 7/31/25	Open	$1,457.68	$0.00		
RAFTE005		RAFTELIS FINANCIAL CONSULTANTS					
26-00251	08/12/25	WA & SWR CAPACITY FEE STUDY	Open	$10,667.50	$0.00		
ROBER025		ROBERT LYNN KERSHNER					
26-00252	07/01/25	RPLC DRIVE BLOWER #3	Open	$8,120.00	$0.00		
26-00253	08/06/25	SVC CLL: PUMPS SCADA	Open	$910.00	$0.00		
			Vendor Total:	**$9,030.00**			
SNYDE005		SNYDER ENVIRONMENTAL SERV					
26-00254	07/23/25	HNTFLD WA TWR DOOR RPLCMNT	Open	$7,710.00	$0.00		
STHIN005		STH, INC.					
26-00279	08/21/25	CRANES LN PS	Open	$8,090.00	$0.00		
CITHO005		THE CI THORNBURG CO, INC.					
26-00221	08/08/25	BALL VALVE	Open	$134.00	$0.00		
26-00222	08/08/25	METER PIT	Open	$1,244.89	$0.00		
26-00223	08/04/25	SADDLE	Open	$404.00	$0.00		
26-00224	08/05/25	BALL VALVE	Open	$2,179.17	$0.00		
26-00225	08/05/25	SADDLE	Open	$384.22	$0.00		
26-00226	08/05/25	TRANSMITTER	Open	$36,838.80	$0.00		
26-00273	08/15/25	TRANSCEIVER	Open	$3,105.00	$0.00		
26-00274	08/18/25	CHLORINE	Open	$4,055.06	$0.00		
			Vendor Total:	**$48,345.14**			
USALC010		USALCO, LLC					
26-00255	08/12/25	DEPALC 2500	Open	$7,636.40	$0.00		
VITAL005		VITAL SIGNS					
26-00256	08/16/25	STICKERS, SIGN	Open	$342.00	$0.00		
WVAME005		WV AMERICAN WATER					
26-00257	08/01/25	USAGE DATA - 2,936	Open	$587.20	$0.00		
WVBUR010		WV BUREAU OF PUBLIC HEALTH					
26-00270	08/21/25	B.CARPER CLSS II & C & S	Open	$150.00	$0.00		
WVDEP005		WV DEPT OF HEALTH & HUMAN					

Vendor # / P.O. #	PO Date	*Name* / Description	Status	Amount	Void Amount	Contract	PO Type
GERAL005		GERALD TAYLOR CO., INC.	*Account Continued*				
			Vendor Total:	**$4,060.30**			
GUTTM005		GUTTMAN ENERGY					
26-00233	08/10/25	W/E 8/10/25	Open	$2,075.46	$0.00		
26-00234	08/17/25	W/E 8/17/25	Open	$1,876.03	$0.00		
			Vendor Total:	**$3,951.49**			
GWIND005		GWIN DOBSON & FOREMAN INC					
26-00229	07/31/25	WW CLLCTN SYS PRJCT	Open	$9,852.15	$0.00		
26-00230	07/31/25	CLLCTN SYS PRJCT RPR SVCS	Open	$25,825.47	$0.00		
			Vendor Total:	**$35,677.62**			
HDSUP005		HD SUPPLY INC					
26-00235	08/13/25	TRIPOD W/CABLE	Open	$5,490.26	$0.00		
26-00236	08/13/25	GLOVES, TNT+	Open	$769.48	$0.00		
			Vendor Total:	**$6,259.74**			
HOIST005		HOIST & CRANE REPAIR INC					
26-00237	08/05/25	SYSTEM INSTALL FOR HOIST	Open	$8,092.95	$0.00		
INDEP005		IN DEPTH INC.					
26-00238	07/29/25	WATER STORAGE TANKS SVCS	Open	$37,780.00	$0.00		
INTEL005		INTELLIPOINT TECHNOLOGIES					
26-00239	08/08/25	IT-REGULAR-REMOTE	Open	$393.75	$0.00		
26-00240	08/15/25	IT-REGULAR-REMOTE	Open	$225.00	$0.00		
26-00271	08/22/25	IT-REGULAR-REMOTE	Open	$112.50	$0.00		
			Vendor Total:	**$731.25**			
INWOO005		INWOOD QUARRY, INC.					
26-00277	08/18/25	C2 & I10 PICKUPS: 8/18/25	Open	$636.34	$0.00		
26-00278	08/21/25	C2 & I8 & I10 PICKUPS: 8/21/25	Open	$1,914.63	$0.00		
			Vendor Total:	**$2,550.97**			
JAMES005		JAMES RIVER EQUIPMENT					
26-00241	08/11/25	ANTIFREEZE	Open	$115.24	$0.00		
26-00242	08/18/25	SVC FOR 50G	Open	$1,388.14	$0.00		
26-00243	08/18/25	SVC FOR 331G	Open	$1,403.71	$0.00		
			Vendor Total:	**$2,907.09**			
JEFFE025		JEFFERSON COUNTY COMMISSI					
26-00246	07/01/25	AMBLNC FEE: EVITTS RUN ESTS	Open	$90.00	$0.00		
26-00247	07/01/25	AMBLNC FEE: WTP & SWR SYST	Open	$90.00	$0.00		
			Vendor Total:	**$180.00**			
KAYCA005		KAY CASTO & CHANEY PLLC					
26-00261	08/12/25	GENERAL: THRU 7/31/25	Open	$2,242.50	$0.00		
26-00262	08/12/25	CLLCTNSYS PRJCT: THRU 7/31/25	Open	$1,235.00	$0.00		
26-00263	08/12/25	MIDDLEWAY: THRU 7/31/25	Open	$2,990.00	$0.00		
26-00264	08/12/25	GRNFLD FRCMN: THRU 7/31/25	Open	$910.00	$0.00		

Charles Town Utility Board
Purchase Order Listing By Vendor Name

Ranges	Item Status	Purchase Types	Misc
Range: *First to Last* ***Rcvd Batch Id Range:*** *First to Last* ***Paid Date Range:*** *08/27/25 to 06/30/26*	***Open:*** *N* ***Void:*** *N* ***Paid:*** *Y* ***Held:*** *N* ***Aprv:*** *N* ***Rcvd:*** *N*	***Bid:*** *Y* ***State:*** *Y* ***Other:*** *Y* ***Exempt:*** *Y*	***P.O. Type:*** *All* ***Format:*** *Condensed* ***Include Non-Budgeted:*** *Y* ***Prior Year Only:*** *N* ***Vendors:*** *All*

Vendor #		*Name*					
P.O. #	PO Date	Description	Status	Amount	Void Amount	Contract	PO Type
AUTOZ005		AUTOZONE					
26-00216	08/18/25	STOCK SEWER VEHICLE	Open	$48.47	$0.00		
26-00280	08/22/25	JOB CORPS PS	Open	$166.20	$0.00		
			Vendor Total:	**$214.67**			
BLUET005		BLUETRITON BRANDS INC					
26-00217	08/13/25	COOLER RENTAL@ 661 S GEORGE ST	Open	$14.09	$0.00		
CHAMP005		CHAMPION INDUSTRIES, INC					
26-00218	07/31/25	PRINTING SVCS JUL	Open	$2,867.99	$0.00		
26-00219	07/31/25	POSTAGE 4 PRINTING SVCS JUL	Open	$7,031.79	$0.00		
			Vendor Total:	**$9,899.78**			
CHARL030		CHARLES TOWN SEWER					
26-00282	08/27/25	JUNE FUNDING	Open	$49,675.07	$0.00		
26-00283	08/27/25	JULY FUNDING	Open	$51,457.84	$0.00		
			Vendor Total:	**$101,132.91**			
CHARL035		CHARLES TOWN WATER					
26-00284	08/27/25	JUNE FUNDING	Open	$34,089.19	$0.00		
26-00285	08/27/25	JULY FUNDING	Open	$41,145.72	$0.00		
			Vendor Total:	**$75,234.91**			
CHSTR005		CHS TRAFFIC CONTROL SERVI					
26-00220	07/24/25	S GEORGE ST: 7/07/25	Open	$1,275.00	$0.00		
CITYO005		CITY OF CHARLES TOWN					
26-00227	08/13/25	JUN UTILITIES@ 661 S GEORGE ST	Open	$1,553.62	$0.00		
COYNE005		COYNE CHEMICAL					
26-00244	08/07/25	CONTAINER RETURNS	Open	180.00-	$0.00		
26-00245	08/07/25	MICRO C2000	Open	$2,580.60	$0.00		
26-00281	08/21/25	ZETAG 8848 FS	Open	$5,227.58	$0.00		
			Vendor Total:	**$7,628.18**			
DEWBE005		DEWBERRY ENGINEERS INC					
26-00228	08/08/25	TO8 WATER MODEL UPDATE	Open	$965.00	$0.00		
DODSO010		DODSON SEPTIC SERVICES, LLC					
26-00275	08/20/25	PUMP LIFT STATIONS	Open	$1,200.00	$0.00		
GERAL005		GERALD TAYLOR CO., INC.					
26-00231	08/12/25	PUMP / TRANSPORT	Open	$1,094.87	$0.00		
26-00232	08/12/25	TRANSPORT	Open	$823.68	$0.00		
26-00267	08/19/25	PUMP / TRANSPORT	Open	$1,149.03	$0.00		
26-00276	08/19/25	SUPERVAC	Open	$992.72	$0.00		

CHARLES TOWN UTILITY BOARD

Wednesday, August 27, 2025

Regular Meeting

661 South George Street
Charles Town, WV 25414

Next Meeting - September 10, 2025 at 4:00 P.M.