CHARLES TOWN UTILITY BOARD
AGENDA

WEDNESDAY, FEBRUARY 23, 2022

Regular Meeting | **661 South George Street, Charles Town, WV 25414** | **4:00 PM**

CALL TO ORDER

1. **APPROVAL OF MINUTES**
   a. Approval of February 9, 2022 Regular Meeting Minutes
      UB Minutes 2.9.2022.pdf

2. **PUBLIC COMMENT**
   This portion of the agenda is designed for members of the general public to share thoughts on items of interest in the community. By law, Board members may ask clarifying questions or discuss procedural matters but are not permitted to discuss the policy merits of any issue unless it is scheduled for discussion.

   The public is invited to attend this meeting in person or via webcast (www.ctubwv.com- Board Meetings - Meeting Agendas and Minutes 2022) or by accessing the following zoom link:

   https://us06web.zoom.us/j/85632698306?pwd=MVM1YzZSeHo1bGR5d3pERlZRUVZxdz09

   Meeting ID: 856 3269 8306
   Passcode: 837417
   +1 301 715 8592 US

3. **UNFINISHED BUSINESS**

4. NEW BUSINESS
   a. Fiscal Year 2022 Water and Sewer Budget Revisions
      FY2022 Budget Revision.pdf
   b. CTUB Leak Adjustment Policy
      Leak Adjustment Policy.pdf
      PSC Sewer Rules.pdf
      PSC Water Rules.pdf
   c. B.C. Partners Alternate Mainline Extension Agreement - Country Club Commons
      BC Partners AMLEA.pdf
      Country Club Commons Ltr.pdf

d. Route 9 Tank - Lease Agreement AT&T - 3rd Amendment
AT&T Lease Agreement - 3rd Amendment.pdf

5. **MANAGER REPORTS**
   a. Utility Manager Report
   January Revenue & Expense.pdf
   THM-HAA5 Average.pdf
   Plant Flows.pdf
   b. Chairman Report

6. **APPROVAL OF BILLS**
   a. February 23, 2022
   Board Report 2.23.2022.pdf

7. **ADJOURNMENT**

8. **INFORMATION ONLY**
   a. Next Meeting - March 9, 2022 at 4:00 PM

February 9, 2022

The Charles Town Utility Board held a regular meeting on February 9, 2022 at 4:00 P.M. Members of the Board present were Daryl Hennessy, Duke Pierson, Tommy Stocks, Jacquelyn Milliron and Jeff Whitten. Also present were Kristen Stolipher, April Shultz, Hoy Shingleton, and Ashley Stottlemyer. The Chairman called for changes or corrections to the January 22, 2022 regular meeting minutes. Jacquelyn suggested changes and with no objections, the Board unanimously approved the minutes as amended. The Board received no public comments.

The Chairman next opened the floor for discussion on the RK&K Request for Time Extension and Scope of Work Change 1. Kristen briefed the Board on the 45-day time extension request from RK&K regarding the 2022 collection system project due to a couple of design changes and relocations. There is no cost impact based on the extension or timing of the project. Kristen also mentioned with the recent WVIJDC acceptance of the project and initial financial terms, WVIJDC will require a contract for the fees relating to the bidding phase assistance, construction phase assistance, and inspection services which were originally included in the facility plan. The scope of work change no.1 will not result in an increase to the project as these costs came in lower to what was originally included in the facility plan. Motion made by Duke, second by Jacquelyn, the Board unanimously approved the RK&K request for time extension and requested an updated letter stating there is no impact to time or budget. Motion made by Tommy, second by Jeff, the Board unanimously approved the scope of work change no. 1.

Next, the Board discussed the Proposed Employee Handbook Revisions. The Chairman briefed the Board on the employee handbook revisions including a Parental Leave Policy, Leave Without Pay, and Benefits Administration During Periods of Unpaid Leave. The Board discussed the revisions and suggested additional changes for the next handbook revision. Motion made by Duke, second by Jeff, the Board unanimously approved the proposed employee handbook revisions.

The Chairman next opened the floor for discussion on the One-Time Annual Leave Payout policy. The Chairman provided the one-time leave payout policy would be offered to employees with over 200 hours of annual (vacation) leave to receive either a 40-hour or 80-hour payout. This would help reduce the number of employees up against the 240-hour annual leave cap. This policy was approved by City Council. Kristen provided the impact to this year's budget for those employees currently over 200 hours of annual leave if those employees took the 80-hour payout. The Board discussed the policy. Motion by Duke, second by Tommy, the Board unanimously approved a one-time payout of up to 80 hours for CTUB employees that are over 200 hours of accrued leave contingent upon funding in the 2022 or 2023 budget.

The Board next discussed the West Virginia Retirement Plus (457 Plan). The Chairman briefed the Board on this deferred compensation program for full-time employees where a portion of their base wages would be deposited into a retirement account. Following the City, CTUB would establish a fund for every employee and deposit 1% of their base wage into an account whether they contribute or not starting July 1, 2022. CTUB would match up to 3% depending on the employee's contribution. Kristen provided the budget impact if all employees contributed and CTUB matched up to the 3%. The Board discussed the options. Motion made by Duke, second by Jeff, the Board unanimously approved to open a 457 account for every full-time employee effective July 1, 2022, contingent upon inclusion in the budget, at 1% of the base salary with CTUB matching up to 3% being effective at or after 90 days for new employees.

Next, the Board discussed Basic Life/Short Term Disability/Long Term Disability options. Kristen mentioned the City offers its employees these benefits as detailed in the handbook, but CTUB does

not. To align with the City, Kristen acquired three quotes (Principal, MetLife, and Guardian) provided by CTUB's insurance carrier to offer these benefits. The budget impacts were included in the Board packet as this would be an employer paid benefit. The Board discussed these options for CTUB employees. Motion by Duke, second by Tommy, with discussion from the Board, the Board unanimously approved aligning with the City and move forward with the MetLife policy to offer the Basic Life/Short-Term & Long-Term Disability to CTUB employees as long as the budget allows.

The Utility Manager Report was next addressed. Kristen briefed the Board on this month's sewer and water efforts including the new lead and copper rules, water facility plan updates, and sewer project updates and approvals. The Board held discussions on the report. The Chairman provided an update under the Chairman report regarding revisions to Article 147 which relates to the Chairman position, as this is his last meeting. City Council will conduct a special meeting on February 14th to discuss Article 147.

The Board next discussed the Approval of Bills. Motion by Duke, second by Tommy, with discussion from the Board, the Board unanimously approved the payment of bills. Next, motion by Tommy, second by Duke, the Board unanimously approved convening into Executive Session to discuss a Personnel Matter- Possible Executive Session Under: WV State Code Section §6-9A-4(b)(2)(A) – Matters arising from the appointment, employment of an employee. Tracey Eberling and Ashley Stottlemyer were invited to join executive session for the discussion. The Board declared executive session over at 5:48 P.M.

With no objections, the Board adjourned the meeting at 5:49 P.M. The February 23rd regular meeting will be held beginning at 4:00 P.M.

_____ _____

Chairman Secretary

Charles Town
Utility Board

661 S. George Street, Suite 101 Charles Town, WV 25414
Phone: (304) 725-2316 ♦ Fax: (304) 725-7150 ♦ Web: www.ctubwv.com

UTILITY BOARD

CHAIRMAN
Daryl Hennessy

VICE CHAIRMAN
City of Ranson Mayor Duke Pierson

TREASURER
Thomas Stocks

INTERIM SECRETARY
Ashley Stottlemyer

County Commission Representative Jacquelyn Milliron

Board Member Jefferson Whitten

UTILITY MANAGER
Kristen Stolipher

RESOLUTION NO. 2022-01
CHARLES TOWN UTILITY BOARD

WHEREAS there is need for the Charles Town Utility Board by and for Water and Sewer operations to adopt revised Water and Sewer Budgets for Fiscal Year 2022;

WHEREAS it has been determined that certain CITY OF CHARLES TOWN (WEST VIRGINIA) Combined Waterworks and Sewerage System Refunding Revenue Bonds require the following:

> Section 6.15.Operating Budget. The Issuer shall annually, at least 30 days preceding the beginning of each Fiscal Year, or at such earlier date required by its charter or the ordinance of the Board, prepare and adopt by resolution a detailed budget of the estimated revenues and expenditures for operation and maintenance of the System during the succeeding Fiscal Year. The Issuer shall mail copies of such annual budget and all resolutions authorizing increased expenditures for operation and maintenance to the Original Purchaser and shall make available such budgets and all resolutions authorizing increased expenditures for operation and maintenance of the System at all reasonable times to the Original Purchaser and to any Holder of Bonds or anyone acting for and in behalf of such Holder who requests the same and;

NOW, THEREFORE, BE IT RESOLVED, that the Charles Town Utility Board hereby adopts revised Water and Sewer Budgets for Fiscal Year 2022, dated February 23, 2022.

CHARLES TOWN UTILITY BOARD

_____
Chairman

Attest:

_____
Dated: February 23, 2022

Charles Town Utility Board					
Revenue & Expense Budget				**WATER**	
For the Period 6/30/22 Re-Budget					
	Budget	**Budget**	**Actuals**	**Re-Budget**	
Title of Account	Ending 6/30/22	At 1/31/2022	At 1/31/2022	Ending 6/30/22	
	Approved April 28, 2021			**For Approval February 23, 2022**	**Notes:**
REVENUE					
Metered Sales - Residential	$2,740,000	$1,598,333	$1,526,811	$2,650,000	*Residential Revenue Decreased
Metered Sales - Commercial	$1,210,000	$705,833	$778,871	$1,330,000	*Commercial Revenue Increased
Metered Sales - GH/CAV	$105,000	$61,250	$59,725	$105,000	
Sale for Resale - Bulk Water	$15,000	$8,750	$11,041	$20,000	
Forfieted Discounts	$80,000	$46,667	$40,021	$80,000	
Misc Service Rev - Reconnection / Tap Fees	$25,000	$14,583	$13,650	$25,000	
Rents Tank Lot Fee	$515,000	$300,417	$307,894	$525,000	*Increased Tank Lot Revenue - FY 2022
Interest Income	$8,000	$4,667	$2,873	$8,000	
Sinking Fund Income	$2,000	$1,167	$32	$2,000	
Misc Non-Operating Revenue	$75,000	$43,750	$40,540	$75,000	
TOTAL REVENUE	$4,775,000	$2,785,417	$2,781,457	$4,820,000	*Overall Revenue Increased
EXPENSES					
Source of Supply & Pumping Expenses					
Operation Labor	$82,000	$47,833	$0	$0	*Reclassed to WTP Labor Below
Supplies & Expense	$20,000	$11,667	$165	$15,000	*Decreased to Actual Expense
Maint of Water Source	$20,000	$11,667	$0	$20,000	
Water Treatment Plant Expenses					
Operation Labor	$246,000	$143,500	$191,952	$340,000	*Reclass from Above & Leave Payout
Power & Fuel	$125,000	$72,917	$58,956	$125,000	
Power & Fuel - GH/CAV	$6,000	$3,500	$2,383	$6,000	
Supplies & Expense	$20,000	$11,667	$7,125	$20,000	
Supplies & Expense - GH/CAV	$10,000	$5,833	$1,699	$10,000	
Chemicals	$120,000	$70,000	$75,042	$130,000	*Increased Chemical Costs
Testing	$45,000	$26,250	$11,024	$45,000	*Includes 1/2 of 120Water LCR
Maint of Water Treatment Plant	$90,000	$52,500	$47,954	$100,000	*Floor Replacement at WTP
Maint of Water Plant - GH/CAV	$10,000	$5,833	$1,925	$10,000	
Transmission & Distribution Expenses					
Maintenance Labor	$440,000	$256,667	$252,010	$445,000	*Increased to Acct. for Water Projects
Supplies & Expense	$20,000	$11,667	$9,267	$20,000	
Maint Dist Reservior & Standpipes	$75,000	$43,750	$59,163	$82,000	*Increased for Tank Cleaning
Maint of Mains	$150,000	$87,500	$14,022	$150,000	
Maint of Services	$200,000	$116,667	$73,094	$200,000	
Maint of Meters	$175,000	$102,083	$60,296	$175,000	
Maint of Hydrants	$25,000	$14,583	$3,489	$20,000	
Customer Accounts Expenses					
Salaries & Wages	$170,000	$99,167	$89,920	$160,000	*Decreased to Actual Expense
Supplies & Expense	$30,000	$17,500	$7,951	$25,000	*Decreased to Actual Expense
Uncollectible Accounts	$30,000	$17,500	$4,773	$15,000	*Decreased to Actual Expense
Administrative & General Expenses					
Salaries & Wages	$115,000	$67,083	$68,776	$120,000	*Includes Leave Payout
Employee Health Insurance & Benefits	$156,000	$91,000	$84,936	$160,000	*Includes Portion of Metlife
Pension	$106,000	$61,833	$57,994	$107,000	
FICA	$81,000	$47,250	$46,474	$82,000	
OPEB	$30,000	$17,500	$12,291	$24,000	*Decreased to Actual Expense
General Office Supplies & Expense	$114,000	$66,500	$61,568	$114,000	
Maintenance of General Property	$15,000	$8,750	$3,536	$15,000	
Contractual Services:					
Engineering	$10,000	$5,833	$52,101	$80,000	*Cap. Proj. Planning, Facility Plan, CIF
Accounting	$20,000	$11,667	$9,063	$20,000	
Legal	$15,000	$8,750	$2,442	$15,000	
Other	$60,000	$35,000	$24,923	$65,000	*Includes 1/2 120Water LCRR Software
Transportation	$40,000	$23,333	$24,369	$45,000	*Increase in Fuel Costs
Property Insurance	$75,000	$43,750	$62,558	$80,000	*Increase in Insurance
Worker's Comp	$45,000	$26,250	$21,717	$35,000	*Premium Less than Original Quote
Regulatory Commission Expense	$20,000	$11,667	$1,655	$20,000	
Bond Administration Fees	$6,000	$3,500	$2,769	$6,000	
Misc. General Expense	$10,000	$5,833	$4,251	$10,000	
Depreciation Expense	$1,180,000	$688,333	$688,333	$1,180,000	
Interest on Long Term Debt	$480,000	$280,000	$235,610	$445,000	*Bond Refunding
Amortization Debt Discount	$78,000	$45,500	$45,500	$78,000	
TOTAL EXPENSES	$4,765,000	$2,779,583	$2,483,078	$4,814,000	
REVENUE - EXPENSES	$10,000	$5,834	$298,379	$6,000	
Monthly Debt Service Principal & Interest	$107,994				
Annual Debt Service Principal & Interest	$1,295,930				
Leases Principal Outstanding (at February 2022)	$24,259				

Charles Town Utility Board					
Revenue & Expense Budget				**SEWER**	
For the Period 6/30/22 Re-Budget					
	Budget	**Budget**	**Actuals**	**Re-Budget**	
Title of Account	Ending 6/30/22	At 1/31/2022	At 1/31/2022	Ending 6/30/22	
	Approved			**For Approval**	
(b)	**April 28, 2021**		Prelim	**February 23, 2022**	**Notes:**
CTUB Service Revenue	$2,310,000	$1,347,500	$1,383,201	$2,340,000	*Revenue Increased
Ranson Revenue	$1,330,000	$775,833	$828,881	$1,390,000	*Revenue Increased
JCPSD Revenue	$2,376,000	$1,386,000	$1,472,716	$2,460,000	*Revenue Increased
Customer Forfieted Discounts	$40,000	$23,333	$22,029	$40,000	
Customer Forfieted Discounts - RA	$27,000	$15,750	$13,603	$27,000	
Customer Forfieted Discounts - PSD $4,000 / mo	$50,000	$29,167	$23,784	$50,000	
Misc. Sewer Revenues	$42,000	$24,500	$10,419	$42,000	
Interest Income	$8,000	$4,667	$4,094	$8,000	
Sinking Fund Income	$3,000	$1,750	$27	$3,000	
TOTAL REVENUE	$6,186,000	$3,608,500	$3,758,754	$6,360,000	*Overall Revenue Increased
EXPENSES					
Collection System Expenses					
Supplies & Expense	$20,000	$11,667	$8,924	$20,000	
Maint of Service Connections	$18,000	$10,500	$35,551	$50,000	*Increased to Actual Expense
Maint of Collecting & Trans Mains	$300,000	$175,000	$94,341	$300,000	
Pumping Expenses					
Operation Labor	$336,000	$196,000	$181,642	$355,000	*Increased to Actual & Leave Payout
Power & Fuel	$120,000	$70,000	$75,499	$135,000	*Increased to Actual Expense
Supplies & Expense	$25,000	$14,583	$7,245	$25,000	
Maint of Pump Stations	$250,000	$145,833	$113,625	$250,000	
Treatment & Disposal Expenses					
Operation Labor	$230,000	$134,167	$132,608	$242,000	*Increased to Actual & Leave Payout
Power CT	$130,000	$75,833	$57,758	$130,000	
Power TUI	$75,000	$43,750	$43,432	$75,000	
Power Deerfield	$10,000	$5,833	$2,775	$10,000	
Chemical Treatment Expense CT	$150,000	$87,500	$87,898	$155,000	*Increase in Price of Chemicals
Chemical Treatment Expense TUI	$20,000	$11,667	$4,990	$20,000	
Testing - CT	$30,000	$17,500	$16,099	$35,000	
Testing - TUI	$5,000	$2,917	$3,274	$7,000	*Increased to Reflect Actual Expenses
Supplies & Expense	$95,000	$55,417	$58,993	$102,000	*Increase in Supply Costs
Maint Disposal - Land Application Burns	$120,000	$70,000	$41,170	$120,000	
Maint Treatment Plant Equipment CT	$240,000	$140,000	$51,845	$240,000	
Maint Treatment Plant Equipment TUI	$80,000	$46,667	$37,961	$80,000	
Maint Treatment Plant Equipment Deerfield	$15,000	$8,750	$7,263	$15,000	
Customer Accounts Expense					
Salaries & Wages	$212,000	$123,667	$116,891	$212,000	
Billing Fees Expense	$85,000	$49,583	$51,137	$90,000	*Increase in Billing Costs
Uncollectible Accounts	$35,000	$20,417	$10,909	$25,000	*Decreased to Actual Expense
Admin & General Expenses					
Salaries & Wages	$180,000	$105,000	$95,796	$185,000	*Includes Leave Payout
Employee Health Insurance & Benefits	$130,000	$75,833	$80,232	$150,000	*Includes Portion of Metlife
Pension	$98,000	$57,167	$52,229	$100,000	
FICA	$75,000	$43,750	$41,207	$77,000	
OPEB	$26,000	$15,167	$11,373	$26,000	
General Office Supplies & Expense	$135,000	$78,750	$68,030	$135,000	
Maintenance of General Property	$35,000	$20,417	$8,588	$35,000	
Contractual Services:					
Engineering	$60,000	$35,000	$33,147	$60,000	
Accounting	$32,000	$18,667	$16,737	$32,000	
Legal	$130,000	$75,833	$96,055	$170,000	*Increase in Legal Fees
Other	$78,000	$45,500	$36,856	$78,000	
Transportation	$55,000	$32,083	$35,499	$65,000	*Increase in Fuel Costs
Property Insurance	$100,000	$58,333	$65,460	$110,000	*Increase in Insurance
Worker's Comp	$36,000	$21,000	$17,063	$36,000	
Regulatory Commission Expense	$30,000	$17,500	$2,337	$30,000	
Bond Administration Fees	$71,000	$41,417	$25,498	$71,000	
Misc. General Expense	$10,000	$5,833	$4,989	$10,000	
Depreciation Expense	$1,800,000	$1,050,000	$1,050,000	$1,800,000	
Interest Long Term Debt	$345,000	$201,250	$163,367	$325,000	*Bond Refunding
Amortization of Debt Discount	$57,000	$33,250	$33,250	$57,000	
TOTAL EXPENSES	$6,084,000	$3,549,001	$3,179,543	$6,245,000	
REVENUE - EXPENSES	**$102,000**	$59,499	$579,210	**$115,000**	
Monthly Debt Service Principal & Interest	$121,447				
Annual Debt Service Principal & Interest	$1,459,499				
Leases Principal Outstanding (at February 2022)	$9,604				

Charles Town
Utility Board
661 S. George Street, Suite 101 Charles Town, WV 25414
Phone: (304) 725-2316 ♦ Fax: (304) 725-7150 ♦ Web: www.ctubwv.com

UTILITY BOARD

CHAIRMAN
Daryl Hennessy

VICE CHAIRMAN
City of Ranson Mayor Duke Pierson

TREASURER
Thomas Stocks

INTERIM SECRETARY
Ashley Stottlemyer

County Commission Representative Jacquelyn Milliron

Board Member Jefferson Whitten

UTILITY MANAGER
Kristen Stolipher

CHARLES TOWN UTILITY BOARD

Leak Adjustment Policy

Adopted February 23, 2022

WHEREAS, the Charles Town Utility Board ("CTUB"), in accordance with the Public Service Commission of West Virginia (the "PSC") *Rules for the Government of Water Utilities* (the "*Water Rules*") and *Rules for the Government of Sewer* (the "*Sewer Rules*"), hereby establishes a Leak Adjustment Policy.

- CTUB will make a leak adjustment only when the water usage being adjusted is in excess of 200% of the customer's historical usage as defined by Rule 6.4.3 of the *Water & Sewer Rules* that can be attributed to leakage on the customer's side of the point of service. The leak adjustment will be computed pursuant to applicable rules of the Public Service Commission, the leak adjustment rate (incremental cost of water and/or wastewater) and the customer's historic usage.

- Historic usage shall be defined as the average of the preceding twelve (12) month or actual period of service if less than twelve (12) months.

- No adjustment will be given for lawn watering, gardening, pool filling, or any other intentional use of water.

- A Leak Adjustment Request Form must be completed within 60 days of billing date reflecting the leak.

- Adjustments for leaking commodes, dripping faucets or malfunctioning appliances will only be considered if the leak amount is more than 200% of the customer's twelve (12) month average usage.

- The customer must submit proof of repair of the leak. This may consist of either a copy of plumber bill, copy of receipt for parts, or photo of repair.

- A "hidden leak" is a leak causing excess usage that is hidden from view, such as in a line that is underground, behind a wall or in a crawl space, and that produces no visible or audible signs that would alert a reasonably prudent person to the presence of the leak.

- If the customer has a hidden leak, then the customer may request a leak adjustment. Upon the customer providing adequate information to demonstrate that there was a hidden leak and that it has been repaired (e.g., repair item receipts or contractor invoices), CTUB will process a hidden leak adjustment in accordance with this policy. CTUB reserves the right to require documentation, including but not limited to repair item receipts or contractor invoices, to verify that a repair has been made and the leak was hidden before processing a leak adjustment.

- CTUB will provide a hidden leak adjustment to eligible customers for a maximum of two billing periods: the period in which the leak developed and the period immediately following that month when the leak should have been repaired. CTUB may, in the alternative and as a courtesy to the customer, adjust the two highest consecutive months during the time the leak ran. An exception will be made if the leak occurred during a billing period or periods during which usage was estimated, or if CTUB in its sole discretion determines that other conditions exist that warrant an adjustment for additional time periods.

- In the event of a second leak in the customer's service pipe, the customer should consider replacing the entire service pipe. Repeated leak adjustments or abuse of this policy may result in a denial of leak adjustments or discontinuation of service under Water Rule 6.8.

- Only 2 leaks per twelve (12) month period will be considered for adjustment.

- This policy shall be applied in a uniform, non-discriminatory manner to all customers. Any customer aggrieved by a provision of this policy has the right to request CTUB to review and revise such provision. A customer who remains aggrieved after review by CTUB has the right to file a complaint with the PSC.

WEST VIRGINIA SECRETARY OF STATE

MAC WARNER

ADMINISTRATIVE LAW DIVISION

eFILED

7/16/2021 10:45 AM

Office of West Virginia
Secretary Of State

NOTICE OF FINAL FILING AND ADOPTION OF A LEGISLATIVE EXEMPT, INTERPRETIVE OR PROCEDURAL RULE

AGENCY: Public Service Commission

TITLE-SERIES: 150-05

RULE TYPE: Legislative Exempt

Amendment to Existing Rule: Yes

Repeal of existing rule: No

RULE NAME: Rules for the Government of Sewer Utilities

CITE STATUTORY AUTHORITY: §§24-1-1, 24-1-7, 24-2-1, 24-2-2, and 24-2H-1.

This rule is filed with the Secretary of State. This rule becomes effective on the following date:

September 14, 2021

BY CHOOSING 'YES', I ATTEST THAT THE PREVIOUS STATEMENT IS TRUE AND CORRECT.

Yes

Jane Neal -- By my signature, I certify that I am the person authorized to file legislative rules, in accordance with West Virginia Code §29A-3-11 and §39A-3-2.

TITLE 150
LEGISLATIVE RULE
PUBLIC SERVICE COMMISSION

SERIES 5
RULES FOR THE GOVERNMENT OF SEWER UTILITIES

§150-5-1. General.

1.1. Scope. -- These rules govern the operation and service of sewer utilities subject to the jurisdiction of the Public Service Commission pursuant to W. Va. Code §24-2-1.

1.2. Authority. -- W. Va. Code §§24-1-1, 24-1-7, 24-2-1, 24-2-2, and 24-2H-1.

1.3. Filing Date. -- July 16, 2021.

1.4. Effective Date. -- September 14, 2021.

1.5. General.

1.5.1. These rules replace rules that went into effect on May 8, 2011.

1.5.2. These rules are intended to ensure adequate service to the public, to provide standards for uniform and fair charges and requirements by the utilities and customers, and to establish the rights and responsibilities of utilities and customers.

1.5.3. Adoption of these rules in no way precludes the Commission from altering or amending them in whole or in part, or from requiring any other or additional service, equipment, facility or standard, either upon complaint or upon its own motion, or upon the application of any utility.

1.5.4. These rules will not relieve in any way a utility from any of its duties under the laws of this State.

§150-5-2. Application of rules.

2.1. These rules apply to all public utilities as defined in Sewer Rule 3.

2.1.1. If hardship results from the application of any Sewer Rule or if unusual difficulty is involved in immediately complying with any rule, application may be made to the Commission for the modification of the rule or for temporary or permanent exemption from its provisions. Provided, that no application for modification or exemption will be considered by the Commission unless there is submitted therewith a full and complete justification for such action.

§150-5-3. Definitions.

3.1. "Applicant" -- A person, firm, corporation, municipality, public service district or any other entity that applies for sewer service.

3.2. "Available sewer service" -- Sewer service will be deemed available to a customer when a main is installed and maintained by the utility in such location and at such distance from the user's premises as may be provided by city ordinance or by the rules of the utility: Provided, that service shall not be deemed

to be available unless the sewage will flow by gravity or be transported by such other methods approved by the Bureau for Public Health including, but not limited to, vacuum and pressure systems, approved under W. Va. Code §16-1-9, from the customer's point of service into the utility service pipe.

3.3. Billing Related Dates.

3.3.1. "Bill due date" -- The date when the utility mails the bill.

3.3.2. "Latest pay date" -- The last date that the bill may be paid without incurring a late payment penalty. The latest pay date shall be no sooner than the 20th day following the date the utility mails the bill and must be stated on the face of the bill.

3.3.3. "Delinquent bill" -- Any bill issued by a public service district or a municipal system that has not been paid within twenty (20) days of the bill due date; or any bill issued by a sewer utility that is not a public service district or a municipal system within thirty (30) days of the bill due date. The date that a bill will become delinquent must be stated on the face of the bill.

3.4. "Commercial Service" -- Service to each separate business enterprise, occupation or institution occupying for its exclusive use any units or units of space as an entire building, entire floor, suite of rooms or a single room, and using water for such incidental use as the schedule of rates applicable to the particular installation may permit. Commercial service shall apply to all stores, offices, hotels, wholesale houses, garages, display windows, signs, theaters, barber and beauty shops, churches, opera houses, auditoriums, lodge halls, school houses, banks, bakeries and any other space occupied for commercial purposes. Any rooming house, lodging house, resort, inn or tavern renting more than four (4) rooms to strangers or transients without any previous agreement for accommodation or as to the duration of stay shall be classed as a hotel and as such it comes under the commercial classification.

3.5. "Commission" -- Whenever in these rules the words "Commission" or "Public Service Commission" appear, such word, or words, shall, unless a different intent clearly appears from the context, be taken to mean the Public Service Commission of West Virginia.

3.6. "Customer" -- Any such person, firm, corporation, municipality, public service district or any other entity who/that purchases a product or services from any utility including any such person, firm, corporation, municipality, public service district or any other entity who purchases such services or product for resale.

3.7. "Customer's Service Pipe" -- That portion of the service pipe from the point of service to the structure or premises supplied.

3.8. "Governmental Unit" -- Any municipality or other political subdivision or agency of the State of West Virginia or the Federal Government.

3.9. "Moratorium" -- A condition imposed on a utility by the Commission prohibiting service connections and/or reactivation of service for an entire system, or a portion thereof.

3.10. "Payment" -- Payment is made by any form of legal payment, including vouchers, that the utility accepts.

3.11. "Point of service" -- The point at which the utility's pipe and appurtenances connect the utility service pipe with the inlet connection of a customer's service pipe at or near the customer's property line or elsewhere if provided for in a user's agreement. The utility shall own and maintain all facilities located

between the point of service and the main.

3.12. "Public Utility" -- Except where a different meaning clearly appears from the context, the word, or words, "Utility" or "Public Utility" when used in these rules shall include any person or persons, or association of persons, however associated, whether incorporated or not, including municipalities, engaged in the business of collecting, transporting, and/or treating sewage.

3.13. "Residential Service" -- Service to a householder or a tenant, living in a separate house or separate apartment in an apartment building, using water and sewer for general household service. If an owner of a multiple apartment building undertakes to furnish water to tenants as a part of the tenants' monthly rent, then such service shall be classed as "Commercial." However, a close branch of a householder's family living with the householder and using the same water facilities shall not be classified as an additional service or as "Commercial." In cases where a householder or tenant devotes some portion of the occupied building to commercial use and uses the remainder as a residence then the predominate use of water shall constitute the basis for classification as either residential or commercial.

3.14. "Sewer Main" -- Sewer pipe owned, operated, or maintained by the utility located in a public right-of-way, street, alley, or private right-of-way, used for the purpose of collecting sewage and from which service connections for customers are taken. Any sewer pipe extending through a utility right-of-way across private property shall be a sewer main. Costs to install a sewer main across private property are subject to the cost-sharing provisions of Sewer Rule 7.5.

3.15. "Temporary Service Connection" -- A connection installed for temporary use provided that the customer's premises is located on a lot having a curb line abutting a street or public right-of-way in which is located a utility sewer main extending along the total frontage of the lot on said street or right-of-way, unless otherwise agreed to by the utility.

3.16. "Utility Service Pipe" -- That portion of the service pipe between the sewer main and the point of service.

§150-5-4. Records, Reports and Other Information to be Supplied to the Commission.

4.1. Records and reports.

4.1.1. Preservation of records. -- All records required by these rules shall be preserved by the utility in the manner prescribed by the Commission.

4.1.2. Location of records.

4.1.2.a. Required records should be kept at the office or offices of the utility in West Virginia and shall be available during the utility's regular business hours for examination by the Commission or its duly authorized representative.

4.1.2.b. If kept outside the State, records shall be brought to the utility's office in West Virginia upon request of the Commission, or the utility may be required to pay the reasonable traveling expenses of Commission employees assigned to examine the records.

4.1.3. Reports to the Commission. -- Upon Commission request, a utility shall furnish to the Commission the results of any test or tests required to be made, or the information contained in any records required to be kept by the utility, or any further information in its possession respecting its rates, charges, or practices, without formal order of the Commission requiring the release of such information.

4.2. Filing of rate schedules.

4.2.1. Tariffs containing rates and rules of each utility shall be filed in the manner prescribed by the Commission in "Rules for the Construction and Filing of Tariffs," 150CSR2 (Tariff Rules) effective as amended or modified by the Commission.

4.2.2. Municipal rates. -- Rates for municipal sewer and combined water and sewer utilities shall be adopted, and tariffs shall be filed, in accordance with the Commission's Tariff Rules, effective as amended or modified by the Commission.

4.3. Utility's special rules.

4.3.1. A utility desiring to establish any rule(s) supplementing the rules of the Commission shall first make application to the Commission for authority to establish such a rule(s), clearly stating the reasons for the rule(s).

4.3.2. On and after ninety (90) days from the effective date of these Rules, any utility's special rules and regulations now on file with the Commission which conflict with these rules, will become null and void, unless they subsequently have been refiled after the effective date of these rules and approved by the Commission.

4.3.3. Exemption. -- A customer who has complied with the rules of the Commission shall not be denied service for failure to comply with the rules of the utility that have not been approved by the Commission.

4.4. Financial and statistical report.

4.4.1. Each utility shall file annually a financial and statistical report with the Commission. The report shall be based upon the accounts set up in conformity with Sewer Rule 4.5. The report shall be filed on or before three (3) months following the end of the utility's fiscal year or on such date as the Commission may direct. The form requirement will be specified in the annual letter sent by the Commission to utilities. The report shall be filed utilizing the form template and filing instructions that can be found on the Commission web site.

4.4.2. Upon written request and for good cause shown, the Commission may approve or disapprove, through its Executive Secretary, by letter, a reasonable extension of time to file the financial and statistical report. A utility shall apply for an extension before the expiration of the time for filing the report.

4.5. Uniform system of accounts.

4.5.1. All sewer utilities shall maintain all accounts and records in compliance with the Uniform System of Accounts as promulgated in 1996 by the National Association of Regulatory Utility Commissioners for Class A, B, and C sewer utilities.

4.5.2. All persons having direct charge of the books and accounts of the utility must observe the system of accounts applicable to the utility by appropriate class. For the purpose of securing uniformity in the applications of this system, all questions of doubtful interpretation of accounting rules are to be submitted to the Commission for consideration and decision.

4.5.3. The classification of sewer utilities for purposes of keeping accounts in accordance with the Uniform System of Accounts shall be as follows:

Classification	Revenue Level
A	$1,000,000 or more
B	$200,000 - 999,999
C	less than $200,000

4.6. Maps and records.

4.6.1. Each utility shall keep on file suitable maps, plans, and records showing the entire layout of every pumping station, treatment plant, transmission and collection line, with the location, size and capacity of each plant, size of each transmission and collection line, and customer's service, and other facilities used in the collection and treatment of sewage.

4.6.2. In the case of new construction or property acquired from others, a utility shall reflect the changes in the maps and records by the end of the next calendar year, following the year the construction is done or property acquired. All drawings shall have the scale clearly shown and be of sufficient detail to accurately depict the project or property.

4.6.3. In general, where present maps of existing facilities are not entirely up-to-date, special surveys to locate any plant or facilities will not be required immediately, but maps must be updated as prescribed by the Commission.

4.7. Management audits.

4.7.1. Scope. -- To establish a procedure for examination of management practices and policies to determine whether the utility being audited is operating with efficiency and utilizing sound management practices. The purpose of a management audit is to disclose operating areas that are efficient or inefficient, to identify areas for improvement, and to form recommendations for changes. The results of a management audit and the response of the utility to the recommendations and implementation plans developed pursuant to a management audit may be a factor in determining just and reasonable rates, as set out herein.

4.7.2. Types of management audits. -- The following types of management audits, which vary in scope, may be directed and utilized by the Commission:

4.7.2.a. Comprehensive. -- An investigation characterized by an extensive, detailed analysis of a utility's management and operations.

4.7.2.b. Reconnaissance. -- A broad review, similar in scope to a comprehensive audit, but in less detail. The objective of this type of audit is to identify specific areas for more intensive investigation based upon the magnitude of the problem identified or the potential benefits to be derived.

4.7.2.c. Focused. -- An in-depth investigation of one (1) or several specific areas of a utility's management and operations.

4.7.3. Frequency. -- The Commission shall order a management audit of any utility under its jurisdiction whenever the Commission deems it necessary to investigate the operational efficiency of the

utility. Such factors as the cost of the management audit and the potential benefits of such audit may be taken into consideration. The Commission may accept or request a management audit performed under the rules of another jurisdiction in satisfaction of this rule when that audit is of the scope contemplated by the Commission, conforms to the standards herein set forth, and covers the utility's service functions in its West Virginia jurisdiction.

4.7.4. Conduct and control.

4.7.4.a. The Commission may choose to have the audit performed by its staff or contracted to a qualified outside auditing firm. In the latter case, the Commission may supervise the selection process. If the management audit is to be conducted by an auditing firm, the Commission's order initiating the audit shall include provision for the development of the request for proposal (RFP), the consultant selection process and staff's assistance and supervision during the audit.

4.7.4.b. The Commission may impose eligibility restrictions upon contractors relating to past, current, and post-audit relationships with the utility.

4.7.4.c. The utility is expected to cooperate to the fullest extent with the performer of a Commission ordered management audit. A responsible employee shall be appointed by the utility as its management audit coordinator, who shall be responsible to assist in the efficient performance of the management audit.

4.7.5. Costs. -- The audited utility is responsible to pay for a contracted audit. The Commission shall include the reasonable cost of conducting the contracted management audit in the cost of service of the utility. The Commission may allow such costs to be recovered in the utility's next general rate case following completion of the audit, or the Commission may order such costs to be amortized over a reasonable period of years, considering the impact of these costs on both the utility and its customers.

4.7.6. Implementation of recommendations.

4.7.6.a. Draft report.

4.7.6.a.1. Upon completion of the audit the auditor will submit a draft report to the utility for comments.

4.7.6.a.2. The auditor and utility representatives shall conduct a draft review meeting subsequent to the distribution of the draft review report.

4.7.6.b. Final report.

4.7.6.b.1. The auditor will submit a final report to the Commission no later than thirty (30) days after the submission of the draft report to the utility.

4.7.6.b.2. Within thirty (30) days of the final submission of the management audit report, the utility shall file a document detailing its position on each audit recommendation. This document must state which recommendations are acceptable to the utility and the nature of the utility's disagreement with any recommendations.

4.7.6.c. The Commission may, after hearing, issue an order prescribing the recommendations that should be adopted by the utility.

4.7.6.d. The utility shall file detailed implementation plans for Commission review and approval within the time specified in the Commission's order prescribing the recommendations that the utility should adopt. The utility shall not deviate from an approved implementation plan without prior notice to the Commission that specifically states the utility's reasons for departing from the approved plan. The utility shall obtain Commission approval prior to any deviation from the approved plan.

4.7.6.e. At the direction of the Commission, a follow-up audit may be performed to review the progress of the utility in implementing the approved plans and the results of previously performed management audits.

4.7.6.f. A management audit report, the resulting implementation plan and any follow-up audit may be used by parties in a general rate case subsequent to the management audit. Audits and implementation plans may be a factor in the determination of just and reasonable rates if introduced as an exhibit and subjected to normal due process procedures.

4.7.6.g. The Commission may grant an extension of the time limits established in this section upon a showing of good cause for such extension.

§150-5-5. Meter Requirements.

5.1. Scope. -- In general, sewer service charges shall be based upon the volume of water delivered to the customer's property. This volume is measured by the water meter serving the premises. In cases where a significant volume of the water delivered to the premises is not returned to the sanitary sewer system or water from another source is discharged to the sanitary sewer system the customer may request, or the utility may require, special flow measuring devices to properly measure the volume of waste water entering the sanitary sewer system. Such special flow measuring devices shall be furnished, installed, and maintained by and at the expense of the customer with the approval of the utility. In some situations suitable formulae may be used to determine waste water flow in lieu of special metering devices. Such formulae shall be approved by both the customer and the utility and are subject to the approval of the Commission. All flow meters used in serving bulk or resale customers shall be owned and operated by the utility providing service to the bulk or resale customer.

5.2. Sewer flow measuring devices. -- Where sewer flow measuring devices are used for billing purposes, the utility shall test these devices for accuracy on an annual basis. The measuring devices shall also be maintained in good working order and shall be adjusted or repaired to be as nearly correct as is commercially practicable.

5.3. Prohibitions on master metering.

5.3.1. Mobile home parks. -- For mobile home parks constructed on or after October 24, 2003, each mobile home in a mobile home park shall be individually sewered with taps installed at the lot line of each mobile home. The lot owner shall be responsible for payment of any applicable tap fees. All utility easements and mains constructed within the mobile home park will become the property of the utility by agreement between the (i) owner of the mobile home park or the lot owner, whichever is applicable, and (ii) the utility. The agreement must be approved by Order of the Commission prior to construction of any main. Lines extending from the mobile home to the tap will be considered customer service lines and maintenance of those lines will be the responsibility of the applicable lot owner.

§150-5-64. Customer Relations.

6.1. Customer information.

6.1.1. Information as to service. -- Each utility shall, upon request, give its customers such information and assistance as is reasonable, in order that customers may enjoy safe and efficient service.

6.1.2. Explanation of computing bills. -- Each utility shall adopt some means of informing its customers as to the method of computing bills, either by printed description on its bills, or by a notice to the effect that the method will be explained at the office of the utility upon request.

6.1.3. Explanation of rates. -- It shall be the duty of the utility to explain to the customer at the beginning of service, or whenever the customer shall request the utility to do so, the utility's rates applicable to the type of service furnished to the customer and all other classes of customers, and to assist the customer in obtaining the best rate for the customer's service requirements. The responsibility for the selection, however, rests with the applicant. In the event the customer's use of service changes such that a rate schedule other than the one initially selected becomes favorable, the responsibility for requesting a change in rate schedule, consistent with the provisions of the service agreement, shall rest with the customer. The utility shall, on its periodic statements, annually inform its customers that, if requested by the customer, the utility shall supply the customer with a copy of the utility's rate or rates applicable to the type of service to be furnished to all classes of customers with a concise written explanation of the rates, and an identification of any classes of customer for whom rates are not summarized.

6.1.4. Posting of law, rates, rules, and collection agents.

6.1.4.a. Every utility shall maintain in its office for inspection by the public, the following:

6.1.4.a.1. A copy of the rates, rules and regulations of the utility, and of forms of contracts and applications applicable to the territory served from that office;

6.1.4.a.2. A copy of the Public Service Commission Law of this State; and

6.1.4.a.3. A copy of these rules.

6.1.4.b. A utility shall exhibit a suitable placard in large type in a conspicuous location, giving information to customers that the utility has a copy of the law, the rules of the Commission applicable to the utility, and the schedules of rates available for customer inspection.

6.1.4.c. Once a year, or as often as a utility changes collection agents, each utility shall publicize by newspaper or bill insert to its customers its collection agents to whom customers may deliver payment of sewer bills.

6.1.5. Application for sewer service.

6.1.5.a. All applicants desiring sewer service may be required to make written application at the office of the utility on printed forms provided therefor setting forth in said application all purposes for which sewer will be used upon the applicant's premises. The utility may require the applicant to provide identification at the time of application for service. All applicants for service shall be required to designate on every application for service whether the applicant is a tenant or an owner of the premises to be served. If the applicant is a tenant, the applicant shall state the name and address of the owner or owners of the premises to be served.

6.1.5.b. Any change in the identity of the contracting customer at a premises will require a new application for sewer service, and the utility may, after reasonable notice, discontinue sewer service

until such new application has been made and accepted, but the former customer shall remain liable for sewer service furnished to said premises until the customer has given notice in writing to the utility to discontinue sewer service. In the event the customer of record has died or has become incapable of being responsible for sewer service, that individual's spouse may become the customer of record without being required to complete a new application for sewer service, or paying a new deposit.

6.1.5.c. In the event that a publicly or privately owned water utility, city, incorporated town, other municipal corporation or other public service district, owns and operates water facilities within the same service territory as the public service district providing sewer service to the area, then the sewer public service district shall provide the customer with a proper receipt and shall instruct the customer to present said receipt to the water utility when application for water service is made.

6.1.6. Public service district's notice of availability of sewer service and billing after notice.

6.1.6.a. Notice by publication. -- When sewer service is made available by a public service district to customers in an area which has not previously been served by the district, the district shall publish a notice in a newspaper of general circulation in the area affected once a week for two consecutive weeks, with the second notice being published at least thirty (30) days prior to the date that the district intends to begin billing for services. The notice shall state, at a minimum, the following information: (1) that sewer services are available; (2) the date that the district will begin billing for services as authorized by W. Va. Code §16-13A-9 and Sewer Rule 6.3; (3) the district's rates; (4) that W. Va. Code §16-13A-9 authorizes the district to petition the circuit court to compel connection to the sewer system; (5) the location and telephone number of the district's business office; and (6) the amount of the bill to be rendered as provided by W. Va. Code §16-13A-9, in the event a customer does not connect to the system.

6.1.6.b. Publication is not required when service is extended to a single customer at the customer's request.

6.1.6.c. Personal notice. -- In addition to notice by publication, when sewer service is made available to customers in an area which has not previously been served by the district, the district shall provide notice with at least the information as described in Section 1. above, to all potential new customers by certified mail, return receipt requested, by personal service with signed and dated receipt, or by posting a notice on the premises. If the premises to be served is not inhabited by the owner, notice shall be given to the owner by certified mail, return receipt requested, in addition to giving notice to the customer inhabiting the premises. In the event that the district is not able to effect personal notice after a good faith effort, or if the district believes that the requirements of this section create an undue hardship on the district, the district may petition the Commission for a waiver of the requirements of personal notice provided in this section.

6.1.6.d. Customers of public service sewer districts who are not connected to the sewer system after appropriate notice has been given of availability of service pursuant to W. Va. Code §16-13A-9 and Sewer Rule 6.1.6. shall be billed based on actual water consumption or the average monthly water consumption based upon the owner's, tenant's, or occupant's specific customer class. These charges must be included in the utility's tariff filed with the Commission.

6.2. Customer deposits.

6.2.1. Security deposits.

6.2.1.a. Security deposits for utilities other than public service districts. -- A utility, other

than a public service district, may require the applicant or customer to make a deposit with it initially, and from time to time, to secure payment of sewer service rates and charges. Except for municipal sewer systems, such deposit shall not be more than one-twelfth (1/12) of the annual estimated charge for residential service and or one-sixth (1/6) of the annual estimated charge for all other service. For a municipal sewer system only, the deposit shall not be more than either fifty dollars ($50) or two-twelfths (2/12) of the average annual usage of the applicant's specific customer class, whichever is greater. For combined water and sewer municipal systems the deposit shall not be more than either one hundred dollars ($100) or two-twelfths (2/12) of the average annual usage of the applicant's specific customer class, whichever is greater. This provision must be included in the utility's tariff filed with the Commission. The utility shall not be bound to supply sewer service until this condition is fulfilled. The utility shall have a reasonable time, not to exceed thirty (30) days, to ascertain that the obligations of the customer have been fully performed before being required to return any deposit in the case where there has not been an automatic refund.

6.2.1.b. Security deposits for public service districts. -- All new applicants for residential or other sewer service from a public service district shall make a deposit of (i) fifty dollars ($50), or (ii) two-twelfths (2/12) of the average annual usage for the applicant's specific customer class for sewer service, whichever is greater, with the district to secure the payment of sewer service rates and charges. For combined water and sewer public service districts such deposit shall not be more than either one hundred dollars ($100) or two-twelfths (2/12) of the average annual usage of water service and wastewater service for the applicant's specific customer class, whichever is greater. The district shall not be bound to supply sewer service until this condition is fulfilled. In any case where a deposit is forfeited to pay service rates and charges which were delinquent at the time of disconnection or termination of service, no reconnection or reinstatement of service may be made by the district until another deposit, as described above, has been remitted to the district. This provision must be included in the utility's tariff filed with the Commission.

6.2.1.c. Return of deposit to customers. -- Except as otherwise provided in Sewer Rule 6.2.1.d., after a customer has paid bills for service for twelve (12) consecutive months without a delinquency, the utility shall promptly and automatically refund the deposit plus accrued interest. Calculation of the above twelve (12) month period shall commence from the first regular payment or following the payment of a delinquent bill or bills. For a customer whose deposit remains with the utility at the time of the requested termination, any deposit plus interest held by the utility shall be credited against the final bill with the utility paying any remainder to the customer at the time of the final bill.

6.2.1.d. Return of deposit by public service districts and municipal systems only for a customer who is a tenant. -- By statute public service districts and municipal systems are not required to return a deposit to a customer who is a tenant until the time the tenant discontinues service with the district or municipal system. After a customer who is a tenant discontinues service with the district or municipal system, the utility shall promptly and automatically refund the deposit plus accrued interest. The public service district or municipal system shall have a reasonable time, not to exceed thirty (30) days, to read and remove meters and to ascertain that the obligations of the customer have been fully performed before being required to return any deposit in the case where there has not been an automatic refund.

6.2.1.e. Interest paid on deposits will be established by the Commission by general order.

6.2.1.f. A current customer of a public service district or a municipal system who requests service at another location within the jurisdiction of the district and who has made payment of bills for the previous twelve (12) months without a delinquency, is not required to pay a deposit for service at the new location because that customer is not a new applicant for service under W. Va. Code §§16-13A-9, 8-20-10, or 16-13-16. The preceding sentence shall not apply to multiple service locations. Multiple

service locations shall require multiple deposits. In the event the customer of record has died, or has become incapable of being responsible for sewer service, that individual's spouse may become the customer of record without being required to complete a new application for sewer service, or paying a new deposit.

6.2.1.g. Record of deposit. -- Each utility holding a cash deposit shall keep a record showing: (i) The name and current address of each depositor; (ii) the amount and date of the deposit; and (iii) each transaction concerning the deposit.

6.2.1.h. The receipt. -- Concurrently with receiving a cash deposit, the utility shall deliver to the applicant for service, or customer, a receipt showing: (i) The date thereof; (ii) the name of the applicant or customer and the address of the premises served or to be served; (iii) the service furnished or to be furnished; and (iv) the amount of the deposit and the fact that interest will be paid at a Commission determined rate. Each utility shall provide automatic means to refund the deposit of a customer, when so entitled, if the original receipt cannot be produced. A receipt or proof of payment will not be necessary under the provisions for an automatic refund.

6.2.1.i. Unclaimed deposits. -- The utility shall follow the provisions of the Uniform Unclaimed Property Act, codified in W. Va. Code §36-8-1 et seq., with regard to the disposition of any unclaimed deposit.

6.2.1.j. This rule shall not affect residential customer security deposits required by a utility prior to the passage of W. Va. Code §24-3-8 on March 12, 1983.

6.2.1.k. All utilities that collect security deposits must do so in a non-discriminatory manner.

6.2.2. Guaranty agreement.

6.2.2.a. A utility, other than a public service district, may accept, in lieu of the cash deposit, a guaranty agreement signed by a financially responsible guarantor, whereby payment of a specified sum, not exceeding the cash deposit aforesaid, is guaranteed. The guarantor may, upon request, receive copies of disconnection notices sent to the customer whose account has been guaranteed; provided that the limitations herein fixed upon the terms of a guaranty agreement shall not apply to industrial customers.

6.2.2.b. A guaranty agreement shall terminate after the customer has satisfactorily paid bills for service for twelve (12) consecutive months, or when the customer gives notice to the utility of discontinuance of service at the location covered by the guaranty agreement, or six (6) months after discontinuance of service where no notice was given, or at the guarantor's request upon thirty (30) days' written notice to the utility. Upon termination of a guaranty agreement, or whenever the utility deems the same insufficient as to amount of surety, a cash deposit or a new or additional guaranty may be required upon reasonable written notice to the customer.

6.2.2.c. Application in case of receiver or trustee. -- The aforesaid provisions shall apply in the case of a receiver or trustee, operating a business under court order that requires utility service.

6.3. Billing information.

6.3.1. All bills for sewer service shall state whether the charge is based upon quantities of water consumed at the premises, flat rate or other charge. A utility shall render bills periodically. If based upon metered water consumption each bill must show the readings of the water meter at the beginning and end of the period for which the bill is rendered, the date of the water meter readings, the number of cubic feet or gallons of water supplied, and the authorized rate. If the utility must, for any reason, render an

estimated bill, the bill shall be clearly marked as an estimated bill. All bills shall state "This utility is regulated by the Public Service Commission of West Virginia" and "Rates available upon request."

6.3.2. No adjustment will be required in billing when the deviation from the standard billing period is not more or less than five (5) days in the case of monthly billing, ten (10) days in the case of bi-monthly billing, and fifteen (15) days in the case of quarterly billing. When the deviation exceeds these limits, either for regular or periodic billing or for opening or closing bills, the sewer blocks, and minimum charges shall be prorated on the basis of the ratio of the number of days in the period in question to the number of days included in the standard billing period, which will be taken at thirty (30) days for monthly billing, sixty (60) days for bi-monthly billing, and ninety (90) days for quarterly billing.

6.3.3. Utilities desiring to adopt mechanical billing of such nature as to render compliance with all the terms of Sewer Rule 6.3.2. impractical, may make application to the Commission for relief from part of these terms. After consideration of the reasons given when asking for relief, the Commission may allow the omission of part of these requirements.

6.3.4. On all bills that include charges for items other than authorized sewer charges, the utility will clearly state other factors used in computing the bill so that the amount may be readily verified from the information appearing on the bill.

6.3.5. Each bill shall bear on its face the latest pay date and the date it shall be a delinquent bill if not paid. A utility may request a delayed payment penalty applicable to current usage billings not paid in full by the latest pay date, equal to ten percent (10%) of the net current amount unpaid. This delayed payment penalty is not interest and is to be collected only once for each bill where it is appropriate. This provision must be included in the utility's tariff filed with the Commission.

6.3.5.a. When a utility receives a customer payment at a time when both a delinquent bill and a current bill are outstanding, the utility will apply the payment first to the current bill, and apply any leftover amounts to the delinquency. Provided, that this rule shall not apply to payments from customers whose delinquencies have been addressed in a deferred payment agreement. If a termination notice has been issued then the payment should first be applied to the delinquent amount that is the subject of the termination notice.

6.4. Adjustment of bills.

6.4.1. Fast meters. -- If the water utility makes a refund to the customer pursuant to Rule 6.4.1. of the Commission's "Rules for the Government of Water Utilities," 150CSR7 (Water Rules), the sewer utility will make a corresponding adjustment to the sewer charges associated with the same period of time based on the corrected meter reading and the applicable sewer rates.

6.4.2. Dead Meters. -- At any time that a water utility calculates water usage and bills for water service pursuant to the provisions in Water Rule 6.4.2., the sewer utility will bill for sewer service for the corresponding time period based on the water usage calculated and billed by the water utility.

6.4.3. Leaks on the customer's side of the meter.

6.4.3.a Each utility shall implement a written leak adjustment policy consistent with this rule. Where the bill reflects unusual water usage in excess of 200% of the customer's historical usage that can be attributed to leakage on the customer's side of the point of service, the utility will adjust the bill. The policy shall be maintained in the utility's office for inspection by the public and shall be applied in a non-discriminatory manner to all customers. The policy shall be filed with the Commission as a part of the

utility's tariff. The reasonableness of the utility's policy shall be subject to approval by the Commission and the reasonableness of the utility's practice with respect to implementing a policy shall be subject to Commission review in a formal complaint proceeding.

6.4.3.b. The recalculated bill shall reflect the utility's incremental cost of treating or purchasing the treatment of the sewage, as contained in the utility's tariff, for all amounts above 200% of the customer's historic usage. Historic usage shall be defined as the average usage of the preceding twelve (12) months or actual period of service if less than twelve (12) months. If using the historic usage would result in an unreasonable calculation, adjustments may be made. If such adjustments are made, the utility should advise its customer that a dispute regarding such adjustments may be taken to the Commission in the form of an informal complaint. Any amounts which the customer can prove did not enter the sanitary sewer system shall be credited at full tariff rates.

6.4.3.c. As an alternative to using the incremental cost of treating or purchasing the treatment of the sewage, the utility may, at its option, use an adjustment that allows it to recover the Commission's estimate of "typical incremental cost" per thousand gallons of sewage on usage above the historic usage. The Commission shall from time to time establish its estimate of "typical incremental cost" by order.

6.4.3.d. In rate cases the Commission will determine the utility's incremental cost of treating or purchasing the treatment of the sewage and require that the utility include the rate in an appropriate tariff as the leak adjustment rate. After the Commission approves a rate in a rate case, the utility shall not have the option to use the Commission's estimate of "typical incremental cost" found in Sewer Rule 6.4.3.c.

6.5. Complaints.

6.5.1. Investigation of complaints. -- Each utility shall make a full and prompt investigation of all complaints made to it by its customers, either directly or through the Commission. In the event that the complaint is not resolved, the utility shall, before service is discontinued, notify the customer that he may file an informal or formal complaint with the Commission.

6.5.2. Record of complaints. -- The utility shall keep a record of all complaints received, which record shall show the name and address of the complainant, the date and character of the complaint, and the adjustment or disposal made thereof.

6.5.3. Disposition of records. -- Records of complaints shall not be destroyed until a summary has been prepared for permanent record, showing the character of complaints made, the number of each type received in each month, and the disposition of the complaints.

6.6. Disputed bills.

6.6.1. In the event of a dispute between the customer and the utility respecting any bill, the utility shall conduct an investigation and report the result thereof to the customer. In the event that the complaint is not resolved, the utility shall, before water or sewer service is discontinued, notify the customer of the customer's right to file an informal or formal complaint with the Commission.

6.7. Customer discontinuance of service.

6.7.1. Any customer requesting service to be discontinued shall give notice thereof to the utility during regular business hours. Unless a different period shall be mutually agreed upon by written contract, the utility will discontinue service by the end of the next business day. Until the utility receives

notice, the customer may be held responsible for all service rendered.

6.8. Utility discontinuance of service.

6.8.1. Consideration of health and sanitation require that sewer service should not be discontinued because of non-payment of service charges unless the utility has first acquired the approval of the Commission. The sewer utility shall make use of all legal remedies available for the collection of delinquent accounts prior to application to the Commission for other relief.

6.8.2. Notice of discontinuance.

6.8.2.a. In the case of a sewer utility requesting termination of water service for non-payment of sewer service, the water utility may not discontinue service sooner than ten (10) days following the date that a sewer utility has mailed to a customer written notice of scheduled termination of service, in compliance with Sewer Form No. 1 attached to these rules. Where written notice is required the utility must send the notice first class mail, address service requested. The written notice shall become void if the utility service has not discontinued within thirty (30) days of the date indicated on the notice.

6.8.2.b. Where (1) conditions hazardous to life or property are found to exist on the customer's premises, (2) the utility's regulating, measuring or collection equipment or facilities have been tampered with, or (3) the customer's premises have been condemned through a condemnation proceeding under the laws of this state, the water may be shut off without notice in advance.

6.8.2.c. Prior to disconnecting water service for non-payment of a sewer bill, a sewer utility or water utility is required to make at least two (2) attempts to notify the customer through personal contact unless it can be reasonably established that the premises are not permanently inhabited. For the purpose of this rule, personal contact includes both face-to-face meetings and telephone calls. The inability to make personal contact shall not prevent the water utility from terminating service.

6.8.2.d. Service shall not be discontinued on a Saturday, or Sunday, any day that is a federal or state holiday, a day on which either the water utility's or the sewer utility's business office is not open to accept payment, or on the day before such days, unless an emergency exists.

6.8.2.e. All disconnections shall be performed between the hours of 8 a.m. and 4 p.m.

6.8.2.f. The water utility may, but is not required to, accept payment at the customer's premises in lieu of discontinuing service for a delinquent sewer bill.

6.8.2.g. If a customer has received notice of a scheduled termination, and, to avoid such termination, makes payment by check which is subsequently dishonored by the bank, the sewer utility may then request the water utility to terminate service only after it has mailed notice, by first class mail, to the customer at least five (5) days, excluding Saturdays, Sundays, and state or federal holidays, prior to termination; provided that at the option of the utility, in lieu of mailing the notice, the utility may contact the customer either in person or by telephone. For purposes of this rule, if the utility elects to contact the customer either in person or by telephone, an attempt to contact shall not be considered sufficient – actual contact must be made.

6.8.2.h. If a landlord of a single-unit dwelling or a master-metered mobile home park, apartment building, motel, hotel or other multiple or single-unit dwelling is responsible for payment of a utility bill, written notice of termination in the form of Sewer Form No. 2 shall be placed at a location readily available for public inspection on the premises at least five (5) days, excluding Saturdays,

Sundays, and state or federal holidays, prior to the scheduled termination of service to that mobile home park, apartment building, motel, hotel or other multiple or single-unit dwelling in order to provide notice of the scheduled termination to the tenants of said mobile home park, apartment building, motel, hotel or other multiple or single-unit dwelling. If the billing address for any single-unit service is different than the service location, a written notice in the form of Sewer Form No. 2 shall be delivered or posted at a visible location on the premises where the service is to be terminated at least five (5) days, excluding Saturdays, Sundays, and state or federal holidays, prior to the scheduled termination. This notice shall inform the occupant(s) of the date on or after which termination of service will occur and shall state the steps the occupant(s) can take to avoid termination of service.

6.8.2.i. Deferred Payment Agreement. A sewer customer who has been notified that water service is to be terminated for non-payment of sewer bills shall be given the opportunity to enter into a deferred payment agreement: Provided, that such customer has demonstrated an ability to pay but only in installments. The customer shall be informed at the time a disconnect notice is issued of the availability of a reasonable payment plan.

6.8.2.i.1. The details of the deferred payment agreement are to be negotiated between the utility and the customer and may consider several factors, including, but not limited to the following: Amount of the delinquency; ability of the customer to pay; payment history; time the delinquency has been outstanding; reasons why the delinquency has been outstanding; and any other relevant factors.

6.8.2.i.2. A standard deferred payment agreement will include a pay-off amount consisting of the delinquency balance in twelve monthly payments. If a residential customer desires a payment period that is shorter than twelve (12) months, the utility shall accept the shorter term. The deferred payment agreement shall include language informing the customer of the right to challenge the reasonableness of the proposed payments to the Commission.

6.8.2.i.3. During the challenge, the utility may not terminate service; provided that the current bill must be paid by the customer on time and in full in order to protect the customer's rights under this rule.

6.8.2.i.4. Once a deferred payment agreement has been established, the customer must pay the current bill on time and in full and make timely payments in accordance with the deferred payment agreement.

6.8.2.i.5. If the customer's financial condition significantly changes and the existing payment agreement results in hardship, the utility shall renegotiate the payment agreement, consistent with the provisions of Sewer Rule 6.8.2.i.1. The customer shall provide documentation in support of a claim that the customer's financial condition has changed. During the renegotiation period the customer must continue to pay the current bill on time and in full and make some payment on the delinquency.

6.8.2.i.6. If the deferred payment is not received in accordance with the terms of the agreement, or the payment is made with a check subsequently dishonored by the bank, the utility may terminate service only after it has mailed written notice, by first class mail, to the customer at least five (5) days, excluding Saturdays, Sundays, and state or federal holidays, prior to notifying the water utility to terminate service provided that at the option of the utility, either personal contact or telephone contact with the customer may be substituted for contact by first class mail. If the customer pays the delinquent payment within that notice period, service shall not be terminated. However, if the customer has, during the previous twelve (12) months, attempted to make payment by a check which was subsequently dishonored by the bank, the utility may refuse the customer's check and immediately terminate service without additional notice.

6.8.2.j. A sewer utility requesting termination of water service for non-payment of sewer bills shall provide the water utility with a copy of the notice provided to the customer as required by Sewer Rule 6.8.2.a.

6.8.2.k. A sewer utility will provide the water utility with a written request for termination of water service for non-payment at least twenty-four (24) hours before the end of the ten-day notice period to the customer.

6.8.2.l. If a utility proposes termination rules that differ from the Commission rules, those termination rules must be filed with the Commission as a request to modify the utility's tariff.

6.8.3. Once a disconnected customer has paid a delinquency in full, or the utility has agreed to enter into a deferred payment agreement with the customer, and all disconnect and or reconnect fees have been paid, the utility shall reconnect the customer's water service as soon as possible, but no later than twenty-four (24) hours from the time the customer pays all disconnect and reconnect fees.

6.8.4. Charge for reconnection.

6.8.4.a Whenever the supply of water is turned off for non-payment of sewer bills, the water utility may make a charge as provided for in Water Rule 6.8.3.

6.8.5. The utility shall not refuse, deny or discontinue service to an applicant or present customer due to a delinquency in payment for service by a previous occupant of the premises to be served unless such applicant or present customer and such previous occupant are members of the same household and were members of the same household at the time the delinquent bill was incurred.

6.8.6. Combined water and sewer public service districts. -- Any public service district providing water and sewer service to its customers shall have the right to terminate water service for delinquency in payment of either water or sewer bills; provided that proper notice is given and procedures followed as set out in these rules.

6.8.7. Inter-utility Agreements regarding discontinuance of water service for non-payment of sewer bills.

6.8.7.a. In the event that any utility (whether public, private, city, incorporated town, municipal corporation or public service district) owns and operates either water facilities or sewer facilities, and a separate utility owns and operates the other kind of facilities, either water or sewer, then the two utilities shall covenant and contract with each other to shut off and discontinue the supplying of water service for the non-payment of sewer service fees and charges; provided that proper notice is given and procedures are followed as set forth in Sewer Rule 6.8.2.

6.8.7.b. Municipal sewer. -- When sewer facilities are municipally owned and water facilities are not, the municipality providing sewer service may require the water utility to discontinue water service to any customer who is delinquent in the payment of sewer service rates and charges to the municipality. The water utility shall discontinue water service upon demand of the municipality for this purpose; however, prior to discontinuance of any water service, the municipality shall contract with the water utility which contract shall provide that the municipality shall reimburse the water utility for all costs and expenses incurred in both the termination of water service to the delinquent sewer customer and the subsequent resumption of water service to such customer. The contract shall provide for reasonable methods and assurances so that the water utility will be protected and held harmless from claims and

damages when water service is discontinued in error or in violation of the rights of the customer through the fault of the municipal sewer utility.

6.8.7.c. The inter-utility agreement should contain specific provisions regarding responsibilities of notice of termination, termination, reconnection, and reasonable fees based on fair and reasonable compensation.

6.8.7.d. Any inter-utility agreements pursuant to Sewer Rule 6.8.7.a. shall be submitted to the Commission for approval prior to any termination of water service for non-payment of sewer bills under such agreements.

6.8.7.e. A water utility that has terminated or reconnected service for non-payment of sewer bills, or that has made a visit to the customer's premises to terminate service, may charge the sewer utility a fee pursuant to Sewer Rule 6.8.7.c. The sewer utility may include this charge in the billing to the delinquent customer, provided that such charge is included in the sewer utility's approved tariff.

6.9. Refusal to serve applicants. -- It is suggested the utility design its application form to reflect the following:

6.9.1. Non-compliance with rules. -- Any utility may decline to serve an applicant until he has complied with these rules and the utility's rules set forth in a Commission approved tariff governing sewer service.

6.9.2. Applicant's facilities inadequate. -- The utility may refuse to serve an applicant if the applicant's installation of sewer piping is hazardous or of such character that satisfactory service cannot be provided.

6.9.3. A bill which has been found to be contractually uncollectible by a court or could reasonably be found to be uncollectible by reason of an applicable statute of limitations shall not be used by a utility to deny or discontinue service.

6.9.4. Applicant's recourse. -- In the event that the utility refuses to serve an applicant under the provisions of this rule, or any other rule incorporated herein, the utility must inform the applicant that the applicant may file a complaint with the Commission for decision.

6.10. Access to property.

6.10.1. The utility shall, at all reasonable times, have access to service connections and other property owned by it on a customer's premises for purpose of inspection, maintenance and operation.

6.10.2. Identification for employees. -- Every employee, whose duties regularly require work on or near the property of a customer, shall wear a distinguishing uniform or other insignia identifying the person as an employee of the utility and shall carry an identification card which will identify the person as an employee of the utility, containing a photograph of said employee. The identification card shall contain the telephone number of the utility as well as other pertinent information necessary to identify the employee. All other employees, whose duties require occasional entry into the homes or premises of customers, shall carry an identification card containing information as herein required.

6.11. Service interruptions.

6.11.1. Records of interruptions. -- Each utility shall keep a record of all interruptions of service

upon its entire system or major divisions thereof, including a statement of time, duration and cause of the interruptions.

6.11.2. Notice required for scheduled interruptions. -- The utility will notify the Bureau for Public Health, the Department of Environmental Protection, the Commission and every customer affected in advance of any contemplated work which will result in interruption of service for any duration that may cause a health or environmental hazard.

6.11.3. Notice required for unscheduled interruptions. -- In the event of an unscheduled service interruption that may cause a health or environmental hazard, the utility will notify the Bureau for Public Health, the Department of Environmental Protection, and the Commission as soon as possible upon the utility becoming aware of an unscheduled service interruption. Additionally, a utility will make customers and the general public aware of any unscheduled service interruption for which the utility is required to provide notice by utilizing one or more of the following acceptable methods of public notification as appropriate:

6.11.3.a. Fax/e-mail notification to local radio and television stations, cable systems, newspapers and other print and news media in the affected area as soon as possible after the event occurs. The notification must provide relevant information about the event, such as the affected location, its potential impact including possible adverse health effects and the population or sub-population particularly at risk, and a description of actions affected ratepayers/occupants should take to ensure safety, with updates as often as needed.

6.11.3.b. Use of the utility's own Internet web site and 24/7 emergency phone line and integrated voice response system to provide relevant information about the event, such as the affected location, its potential impact including possible adverse health effects and the population or sub-population particularly at risk, and a description of actions affected ratepayers/occupants should take to ensure safety, with updates as often as needed.

6.11.3.c. Other types of notice at the discretion of the utility, including, but not limited to, doorknob flyers distributed to affected ratepayers/occupants e-mail, text message, automated dialing system (outbound dialing).

6.11.4. Actual notice must be provided to affected health care and childcare facilities and other facilities, for example, schools and restaurants, as determined by consultation with the Commission, the Bureau for Public Health, the Department of Environmental Protection and other state agencies as necessary.

6.11.5. A utility shall coordinate with state and local emergency management agencies, as needed, to use any emergency alert system available for qualifying situations.

6.11.6. Public Notice Templates. -- Utilities should have public notice templates prepared and available in advance to avoid wasting critical time developing materials when confronted with an unscheduled service interruption. The notices should cover all possible contaminants of concern and associated health effects.

6.11.7. Utility Contact Person. -- To ensure that the public is informed in the case of an unscheduled interruption occurring due to an emergency situation, utilities should have a knowledgeable contact person stationed onsite during the emergency, if possible, to communicate to the public and media on behalf of the company.

6.12. Moratoria.

6.12.1. Conditions. -- The Commission may impose a moratorium on the system, either entire or apportioned, whenever sufficient evidence exists that the existing facilities are operating in excess of design capacity, that the system capacity necessary for future demand does not exist, or when an increase in customers will result in the degradation of service to existing customers.

6.12.2. Petition. -- A utility, Commission Staff, or governmental entity may petition the Commission in writing for the imposition of a moratorium on a system. The petition should include evidence of the existence of conditions outlined in Sewer Rule 6.12.1. If the utility is the petitioner, it must state the utility's plan to remediate those conditions.

6.12.3. Imposition by state agency other than the Commission. -- A utility must immediately notify the Commission in writing if a State agency other than the Commission imposes a moratorium on the utility's system.

6.12.4. Public notification of petition. -- A party petitioning for a moratorium shall notify the public that such request is being made, through a Class II legal advertisement in the form of Sewer Form No. 3, "Public Notice of Filing of a petition for imposition of a moratorium" attached to these Rules, published no later than fifteen (15) calendar days from the date such request is made to the Commission. The notification shall clearly state which areas of the utility's system are affected, and that interested parties may submit comments to the Commission for consideration.

6.12.5. Exemptions. -- Any prospective customer or group of prospective customers may apply to the Commission for an exemption from an existing moratorium. The prospective customer(s) shall make the requests in writing to the Commission, and shall include justification for the proposed exemption.

6.12.6. Refusal of Service. -- A utility may not deny service to a prospective customer on grounds of a moratorium until the Commission has imposed a moratorium. Any utility denying service to a prospective customer or group of customers due to a moratorium shall notify, in writing, all applicants for service of the applicant's right to file with the Commission a request for exemption from the moratorium.

6.12.7. Improvements to System. -- A utility upon which a moratorium is imposed shall continue to seek improvements to its system necessary to lift the moratorium. The Commission may, at its discretion, require the utility to submit reports outlining all progress made toward system improvements.

§150-5-7. Utility Facilities; Service Pipes; Extension of System.

7.1. Adequacy of facilities.

7.1.1. The collecting system of every sewer utility shall be designed, constructed, maintained and operated to receive and transport the sewage from its customers' outlets to its treatment plant without undue delay.

7.1.2. Where the terrain is such that pumping or lift stations must be provided, such facilities must have the approval of the Bureau for Public Health and the Department of Environmental Protection and be operated under the rules of the Bureau for Public Health and the Department of Environmental Protection.

7.1.3. When a new sewer utility proposes to construct and operate a sewer service business, its entire plant layout shall be approved by the Bureau for Public Health and the Water Resources Division of the Department of Environmental Protection.

7.1.4. Construction and maintenance of plant. -- A utility shall at all times construct and maintain its entire plant and system to furnish safe, adequate and continuous service.

7.1.5. Inspection of plant. -- A utility shall inspect its plant and facilities in such manner and with such frequency as is necessary to ensure a reasonably complete knowledge as to conditions and adequacy at all times. Such inspections must comply with the legally applicable requirements of the Minimum Federal Safety Standards (Federal Occupational Health and Safety Administration) and the Bureau for Public Health and the Department of Environmental Protection.

7.1.6. Records of conditions. -- Records necessary for the proper maintenance of the system and in accordance with the Bureau for Public Health and the Department of Environmental Protection and the Minimum Federal Safety Standards shall be kept of the conditions found. In special cases, a more complete record may be specified by the Commission.

7.1.7. Records of operation. -- A utility shall keep a record of the operation of its plant, which, so far as practical, shall show sufficient details of plant operation as is necessary to substantially reproduce its daily operations. The utility shall also maintain the records in accordance with the requirements of the Minimum Safety Standards and the Bureau for Public Health and the Department of Environmental Protection.

7.1.8. Report to Commission. -- A utility shall, upon request of the Commission, file with the Commission a statement regarding the condition and adequacy of its plant, equipment, and facilities, and of its operations and service in such form as the Commission may require.

7.2. Utility Service Pipe.

7.2.1. Where the service pipe is required for the immediate and continuous use for general service to premises abutting the public street or right-of-way in which mains are located, the utility will furnish, install, and maintain the utility service pipe and appurtenances between the main in the street up to the customer's point of service at or near 90 degrees to the main. All such service pipes and appurtenances shall be installed only by the utility unless by prior written agreement.

7.2.2. The utility shall determine the location of the utility service pipe.

7.2.3. The utility shall install and maintain, at its own cost and expense, all of the utility service pipe to the point of service, regardless of the side of the road on which the customer is located in reference to the main line. The utility shall designate the point of service on the customer's side of the road.

7.2.4. The utility shall not make any charge for furnishing and installing any permanent service connection, unless the utility has prior approval of the Commission to charge a tap fee and the same is set forth in the utility's tariff on file with the Commission.

7.2.5. The utility service pipe shall remain under the utility's sole control and jurisdiction.

7.2.6. The customer shall not attach any fixtures to, or make any branches in, the utility service

pipe between the point of service and the main. Violation of this rule may result in termination of service pursuant to these rules.

7.2.7. A utility shall install temporary service connections for construction or other temporary purposes at the cost of the applicant.

7.2.8. A utility shall adopt standard methods of installation where practicable and file a written description and drawings to provide a clear understanding of the requirements.

7.2.9. Availability defined. -- Sewer service will be deemed available to a customer when a main is installed and maintained by the utility in a location and at a distance from the user's premises as may be provided by city ordinance or by the rules of the utility: provided, that service shall not be deemed to be available unless the sewage will flow by gravity or be transported by such other methods approved by the Bureau for Public Health including, but not limited to, vacuum and pressure systems, approved under W. Va. Code §16-1-9, from the customer's premises into the utility's facilities.

7.3. Customer Service Pipe.

7.3.1. No customer, plumber, company owner or any agent shall connect to the utility's main or to any utility service pipe, or extend the pipes therefrom to any premises for the purpose of securing sewer service, until application has been made therefor to the utility as provided in these rules and the utility has granted permission in writing.

7.3.2. Once a utility grants an application for service, the customer shall install and maintain the customer service pipe.

7.3.3. The utility's authorized employee shall inform the customer of the location of the point of service. The customer shall install the customer service pipe to the point of service after which the utility will install the utility service pipe from the main to the point of service.

7.3.4. Where the utility's service pipe is already installed to the point of service, the customer shall connect with the utility service pipe as installed.

7.3.5. The customer service pipe shall be installed in a workmanlike manner, shall conform to all reasonable rules and regulations of the utility, and shall be maintained by the customer at the customer's expense.

7.3.6. The utility will specify the size, kind, quality and location of all materials used in the customer's service pipe and the customer shall comply with those specifications.

7.3.7. A customer must maintain the customer service pipe in good condition and free from all leaks and defects, at the customer's cost and expense. A customer's failure to comply with this rule may result in termination of water or sewer service pursuant to these rules.

7.3.8. The customer's service pipe shall be laid below the frost line at all points and shall be placed on firm and continuous earth so as to give unyielding and permanent support; and be installed in a trench at least two feet in a horizontal direction from any other trench wherein gas pipe, water pipe, or other facilities, public or private, are or are to be installed.

7.3.9. A customer's service pipe shall not pass through or across any premises or property other than that to be served. If a property served as of September 14, 2021 is later subdivided resulting in the

original customer's service pipe crossing the subdivided property that will be occupied by a new customer, the original customer and new customer must have separate service pipes. The original customer must obtain a right-of-way for the original customer's service pipe on subdivided sections of property before title of such section passes to a new owner.

7.3.10. The customer's service pipe and all connections and fixtures attached thereto shall be subject to the inspection of the utility before use, and all premises, including any and all fixtures within the said premises, shall at all reasonable hours be subject to inspection by a duly authorized employee of the utility.

7.3.11. The utility shall make changes and bear the full costs of changes in the customer's service pipe required due to changes in grade, relocation of mains, and other causes not related to the customer. The customer shall bear the full costs of changes in service pipe or meter location desired by the customer for the customer's convenience.

7.3.12. The customer shall not attach any fixtures to, or make any branches in, the customer service pipe between the point of service and the premises served. Violation of this rule may result in termination of service pursuant to these rules.

7.3.13. The connection of surface drains to the sanitary system is prohibited. As a means to deter prohibited connections where surface or ground water is introduced into the sanitary system, the utility may add a surcharge to the customer's sewer bill where evidence of a violation exists. The surcharge shall be authorized by separate schedule to the utility's sewer tariff filed pursuant to the *Rules for the Construction and Filing of Tariffs*, 150CSR2, but the utility need not file revenue, expense, or other financial data unless otherwise ordered by the Commission. The charge for roof drains, downspouts, storm sewers or similar facilities connected to the sanitary sewer system will be calculated by the formula or rate clearly stated in the tariff, and will not be cumulative to any metered rate for sewer service. The tariff should further provide that the surcharge will not be imposed unless and until the customer is notified by certified mail, return receipt requested, or by hand delivery, that it has been established by smoke testing, dye testing, or on-site inspection that rain or surface water is being introduced into the sanitary sewer, and that the customer has thirty (30) days to divert that water from the sanitary sewer.

7.4. Extension of mains to serve new customers.

7.4.1. A sewer utility, whether publicly or privately owned, is under a public service obligation to extend its mains, and its plant and facilities to serve new customers within its service area who may apply for service.

7.4.2. The utility shall make extensions in all cases in which the public convenience and necessity require the service, construction problems are not unusual or burdensome, and the extensions appear to be economically feasible.

7.4.3. For any proposed extension of mains, a reasonable relationship should exist between the per customer investment to serve new customers and the per customer investment to serve old customers.

7.4.4. A utility shall make every effort to install its main line in the public road right-of-way or in a utility right-of-way abutting the public road right-of-way.

7.4.5. Extension for general sewer service.

7.4.5.a. The utility will respond to all inquiries regarding new sewer service, whether oral or

written, by explaining all available options for obtaining service under these rules.

7.4.5.b. The utility will, upon written request for service in the form of Sewer Form No. 4, by a prospective customer or group of prospective customers located in the same neighborhood, determine the necessary size of main required to give service and make an estimate of the cost of providing the requested service, using the form of Sewer Form No. 5, including pipe, valves, manholes, fittings, necessary materials, permits, labor costs incurred by the utility when the utility externally contracts for the construction of the extension, or internal labor costs, provided such internal or external costs are not recovered in existing rates, and other applicable related costs. When a road crossing(s) is (are) necessary to serve the customer(s) requesting service, the cost estimate shall not include costs attributable to extending the main across the first road (closest to the already existing main), but shall include the costs of installing the main across a second and any subsequent road(s). The utility will provide the written estimate calculated using Sewer Form No. 5 to the customer in the form of Sewer Form No. 6, no more than forty-five (45) days from the receipt by the utility of the written request for service. The written estimate shall include an estimated construction start date and an estimated time of construction. If the prospective customer believes that any part of the estimate is unreasonable, the customer is free to pursue an informal request for assistance from the Commission staff or to file a complaint with the Commission. Further, the utility and the customer shall execute a Main Line Extension Agreement. Commission Staff may be consulted to provide assistance and sample forms. The agreement must include as an attachment a copy of this extension rule. The utility shall keep an executed copy of the agreement for at least six (6) years. The length of the extension required shall be that length required to extend from the new proposed service area to the nearest point of connection to the utility system having sufficient excess capacity to provide service at maximum demand.

7.4.5.c. Whenever the utility is required to extend service from an existing main to property that does not immediately abut the utility's right-of-way or the public road that contains the utility main, the extension shall be considered a main extension and the cost responsibility shall be determined under Sewer Rule 7.4.5.

7.4.5.d. Where the cost of the extension does not exceed the estimated total net revenue, as calculated below, from prospective customers whose service pipes will immediately be connected directly to the extension and from whom the utility has received applications for service upon forms provided by the utility for this purpose, the utility will install, at its own cost and expense, the necessary extension; provided, that the patronage or demand will be of such permanency as to warrant the capital expenditure involved.

7.4.5.d.1. Net annual revenue shall be gross annual revenue minus an amount equal to the excess usage leak adjustment rate approved for the utility times the applicant's usage used for the purposes of this rule, with this difference further reduced for any revenue based taxes.

7.4.5.d.2. The utility will base revenue on the average usage by customer class at the time of the extension, unless circumstances of the applicant show this would result in significant error. For non-residential units, the utility will base annual revenue on typical consumption for comparable units published by the American Water Works Association.

7.4.5.d.3. Estimated total net revenue for private, for profit, utilities will be calculated as six (6) times estimated net annual revenue. Each such utility shall file for a utility-specific line extension multiplier within twelve (12) months of the effective date of these rules.

7.4.5.d.4. The utility-specific line extension multiplier for private, for profit, utilities shall be based on one (1) divided by the utility's net fixed charge rate. The net fixed charge rate shall

equal a function of the utility's weighted cost of capital, applicable income tax rates, and the Commission approved depreciation accrual rate.

7.4.5.d.5. Estimated total net revenue for associations, municipal, and public service district utilities will be calculated as five (5) times estimated net annual revenue. If the Commission approved excess leak adjustment for the utility fails to include all of the incremental costs of serving a new customer that should properly be netted out from the total revenues of the utility, the utility may apply to the Commission for a determination of the proper amount to be deducted from gross revenues to arrive at an appropriate determination of net revenue.

7.4.6. Extensions beyond the limit of utility-financed extensions of general sewer service.

7.4.6.a. If the utility-estimated cost of the proposed extension required in order to furnish general sewer service exceeds the utility's estimate of total net revenue as determined by Sewer Rule 7.4.5.d., the utility will make the extension if the applicant or the applicant's authorized agent contracts for the extension and deposits in advance with the utility the estimated cost of the extension over and above the limit of the utility-funded portion of the extension. The utility shall not pay nor be liable for any interest on such cash deposits. The utility shall make the extension after receiving the cash deposit. The utility shall, for each bona fide new customer who, within a period of ten (10) years from the making of such extension, directly connects to the extension between its original beginning and original terminus refund to the original depositor(s), an amount equal to the estimated total net revenue of the new customer as determined by Sewer Rule 7.4.5.d., but in no event shall the aggregate refund made to the depositors exceed the original deposit. Provided, however, that associations, public service districts and municipal sewer utilities may elect to refund the estimated amount over a period of five (5) years making payments no less frequently than every six (6) months.

7.4.7. Alternate Depositor-Financed Extension Plan.

7.4.7.a. Qualifying utilities. -- The above requirements notwithstanding, the utility may decline to finance the portion of a requested extension that would be utility-funded, if it can demonstrate that it has no prospect of any reasonable internal or external financing through commercial loans, grants, or through an installment arrangement with an entity installing the extension or providing the necessary materials.

7.4.7.a.1. If the utility declines to finance the portion of a requested extension that would be the financial responsibility of the utility, the utility shall file for a waiver of the extension rule within sixty (60) days of the written request.

7.4.7.a.2. Before filing for a waiver, the utility must first estimate the extension costs.

7.4.7.a.3. A request for a waiver by a utility shall be accompanied by supporting documentation justifying its request, including cost estimates, documentation of inability to finance, internally or externally, through commercial loans, grants or an installment arrangement with an entity installing the extension or providing the necessary materials.

7.4.7.a.4. If the Commission finds that the utility has reasonably declined to finance the portion of the requested extension that would otherwise be utility-funded, the Commission shall authorize the use of the alternate depositor-financed extension plan as described below.

7.4.7.b. Description of alternate depositor-financed extension plan. -- Under the alternate depositor-financed extension plan, the utility shall make the extension after:

7.4.7.b.1. receiving a cash deposit equal to the full amount of the extension cost; and

7.4.7.b.2. agreeing to give the depositor(s), who is a customer, a monthly bill credit totaling one hundred percent (100%) of the actual net bill(s) from the date service is initiated and until the total credits given equal the estimated total net revenue as defined in Sewer Rule 7.4.5.d.; and

7.4.7.b.3. agreeing to refund to the original depositor(s) an amount equal to estimated total net revenue as defined in Sewer Rule 7.4.5.d. of each bona fide customer, other than the depositor(s), who, within a period of ten (10) years from the construction of the extension, directly connects to the extension between its original beginning and the original terminus. The refund may be spread out over a five (5) year period with the utility making payments no less frequently than every six (6) months. The refunds shall continue until the total refunds given equal the estimated total net revenue as defined in Sewer Rule 7.4.5.d.

7.4.7.c. In no event shall the total refund made to the depositor(s) under Sewer Rule 7.4.7.b.3. exceed the original deposit of the depositor(s).

7.4.7.d. The utility shall not pay nor be liable for any interest on the cash deposits associated with line extensions.

7.4.8. General provisions.

7.4.8.a. If the actual cost of the extension is less than the estimated cost, the utility will refund the difference as soon as the actual cost is ascertained, but in no event later than ninety (90) days after completion of construction of the extension. When the actual cost of the extension exceeds the estimated cost, the utility will bill the depositor for the difference between the estimated and the actual cost. The utility will not pay interest on the applicant's payment or on any balance that is refunded.

7.4.8.b. In estimating the cost of an extension, the utility will base the estimate on the diameter of the pipe to be used; provided, that the estimated cost to the customer or customers shall not be based on a pipe diameter greater than the diameter of the main from which the extension is to be made, unless actual use estimated for the proposed customer or customers required a larger pipe.

7.4.8.c. Extensions made under this rule shall be and remain the property of the utility.

7.4.8.d. The utility reserves the right to further extend its sewer mains from and beyond the extension made under this rule, and the depositor or the depositor's agent paying for an extension shall not be entitled to any refund for customers attaching to such further extension or branch mains so installed.

7.4.8.e. In determining the length of main extensions or of sewer line to be installed in an urban area when land is subdivided in lots, the main, or sewer line (if installed by an entity other than a utility), shall be extended to fully cover the frontage of the property and if the last lot to be served is a corner lot, the terminal point of the extension made hereunder shall be located so that the sewer line ties in with the intersecting street. If there is no main located in the intersecting street, the terminal point of the extension shall be located at the nearest street line of the intersecting street. In rural areas or open land areas, the extension required will be that length necessary to adequately serve the applicant.

7.4.8.f. Before sewer lines are laid in any new subdivision, the road surface shall be brought to the established sub-grade as determined by the agency having jurisdiction.

7.4.8.g. This rule shall not be construed as prohibiting the utility from entering into an agreement with a customer that complies with the Commission approved checklist attached hereto as Sewer Form No. 7, in providing an alternate plan for a main extension. Commission Staff may be consulted to provide assistance and sample forms. In providing an alternate plan for main extensions a utility may not discriminate between customers whose service requirements are similar. The agreement shall be filed with and approved by the Commission prior to the implementation or execution of the agreement by any of the parties. The agreement shall include the name, address and phone number of the parties to the agreement. The agreement shall also include a provision explaining why the utility is not funding the extension. The agreement must attach a copy of Sewer Rule 7.4., and a statement signed by the prospective customer that he has reviewed and understands the provisions of Sewer Rule 7.4.6. which entitle a customer to refunds and that he knowingly waives such rights, if applicable. Failure to obtain Commission approval will result in the loss of the right to obtain reimbursement from the utility. If an entity other than the utility constructs the extension, upon completion of construction and proper utility inspection of the extension, the utility shall initiate service only after proper transfer of title to all facilities including property, plant and rights-of-way incidental to the furnishing of utility service.

7.4.8.h. Contract for service. -- A utility is not required to make utility-funded extensions or refunds as described in this rule unless those to be served by such extensions shall guarantee to the utility that they will take the service at the premises within thirty (30) days after service is available or as otherwise mutually agreed in a user's agreement.

7.4.8.i. Construction conditions. -- A utility will undertake construction of line extensions, as provided in this rule, promptly after all applications are completed, necessary right-of-way agreements or rights of entry are delivered to the utility, and all prospective customers have signed contracts.

7.4.8.j. Right-of-Way.

7.4.8.j.1. If construction of an extension involves the acquisition of a private right-of-way, then the prospective customer shall attempt to secure the right-of-way and deliver it to the utility free of cost before construction of the extension begins.

7.4.8.j.2. If, however, it is not reasonably possible for the prospective customer or customers to secure the right-of-way, and the construction of an extension involves the utility's incurring expense for right-of-way easements, either by purchase or condemnation, the utility will add those costs to the total cost of the extension.

7.4.8.j.3. As a condition to obtaining a main extension, property owner or developer must grant the utility the necessary easements which would allow the utility to make future extensions into unserved areas. The property owner or developer will grant the necessary easements without requiring the utility to pay additional consideration for the additional easements to the property owner or developer. If the property owner or developer is unwilling to grant the additional easements, the utility shall not be required to extend its main to serve the property owner or developer.

7.4.8.k. Upon the proper filing of a Tariff Rule 42A, 42R, 42T, 19A, or 19R rate case or a certificate case filed pursuant to W. Va. Code §24-2-11 by the utility, the utility may seek to include in its tariff a Capacity Improvement Fee, Capacity Assurance Fee or such other fee or charge designed to raise capital to cover the cost of future capacity expansion to be assessed against customers or entities creating those costs.

7.4.9. Community infrastructure investment agreements with municipal utilities and public

service districts.

7.4.9.a Municipal utilities and public service districts may enter into "community infrastructure investment agreements" in accordance with the provisions of W. Va. Code §22-28-1 et seq.

7.4.9.b. A utility that has entered into "community infrastructure investment agreements" pursuant to W. Va. Code §22-28-1 et seq. shall maintain separate books and records for the project areas involved in the agreements. For purposes of this section, the project areas for which separate books and records are required include plant upgrades and stand alone systems.

7.4.9.c. A utility that has entered into "community infrastructure investment agreements" pursuant to W. Va. Code §22-28-1 et seq. shall file (i) a copy of the certificate of appropriateness, (ii) a copy of the community infrastructure investment agreement, and, if necessary, (iii) a new tariff containing rates applicable to the new service area. The utility shall file the required documents with the Commission no later than thirty (30) days of the date the project is transferred to the utility.

7.4.9.d. If rates for the new customers served by a public service district's project are higher than the rates for the public service district's existing customers, the public service district shall, within ninety (90) days of the date the project is transferred to the public service district, make a formal rate application with the Commission in order to justify the higher rates to the new customers. A municipality shall enact an ordinance increasing rates, if necessary, within ninety (90) days of the date the project is transferred to the municipality.

§150-5-8. Safety requirements.

8.1. Accidents.

8.1.1. Records. -- A utility shall keep a record of every accident occurring in connection with the operation of its treatment plant, property and equipment whereby any person is killed or seriously injured, or any substantial amount of property damaged or destroyed, with a full statement of the cause of the accident and the precautions taken to prevent similar accidents in the future.

8.1.2. Electric shock. -- A utility shall instruct its employees engaged in electrical work in the practice and use of accepted rules and proper procedure for resuscitation from electric shock.

8.1.3. Asphyxiation. -- A utility shall inform its employees who must work in manholes and pits of the dangers of asphyxiation and instruct them in the practice and use of accepted rules for detection of dangerous gases, as well as the proper procedure for treating victims.

§150-5-9. Creation or alteration of public service districts.

9.1. Creation or alteration of a public service district.

9.1.1. A county commission upon entering an order on its own motion, or upon receipt of a petition, or upon receipt of a recommendation of the Commission, proposing the creation, enlargement, reduction, merger, dissolution, or consolidation of a public service district pursuant to W. Va. Code §16-13A-2, shall:

9.1.1.a. At the same session, fix a date of hearing in the county which date shall be not more than forty (40) days nor less than twenty (20) days from the date of the action;

9.1.1.b. Within 10 days, provide the Executive Secretary of the Commission with a copy of the order or petition and notification of the time and place of the hearing to be held by the county commission;

9.1.1.c. If the territory proposed to be included is situated in more than one (1) county, when fixing the date of hearing, provide for notifying the county commission and clerk thereof of each of the other counties into which the territory extends of the date so fixed;

9.1.1.d. Publish, at least ten (10) days prior to the hearing, a Class I legal advertisement meeting the requirements stated in W. Va. Code §16-13A-2, giving notice of the hearing;

9.1.1.e. Post notice in at least five (5) conspicuous locations in the proposed public service district as required by W. Va. Code §16-13A-2; and

9.1.1.f. File with the Executive Secretary of the Commission affidavits of publication pursuant to Sewer Rule 9.1.1.d., and affidavits of posting pursuant to Sewer Rule 9.1.1.e. as soon as the same are available.

9.2. Notification to the Commission of county commission action.

9.2.1. If the county commission enters an order creating, enlarging, reducing, merging, dissolving, or consolidating a public service district, the county commission shall, within ten (10) days of entering such order, file a copy of such order with the Executive Secretary of the Commission. If the county commission declines to enter such an order, the county commission shall, within ten (10) days of declining, file with the Executive Secretary of the Commission notice that it has declined to enter any such order.

9.3. Notice of Filing.

9.3.1. Upon the receipt of a county commission order proposing the creation, enlargement, reduction, merger, dissolution, or consolidation of a public service district pursuant to W. Va. Code §16-13A-2, the Commission may provide notice of the proceeding through the issuance of a Class I legal advertisement in the form prescribed by the Commission, in the county or counties affected by the proposed order. The notice shall include the right of any customer of the proposed public service district or other interested party to file a written protest. See Sewer Form No. 8 for example of notice to be published.

9.4. Commission hearing.

9.4.1. The Commission may hold a hearing or hearings in each county affected by a county commission order(s) filed pursuant to Sewer Rule 9.1.1. If the Commission holds a hearing, the Commission shall publish a Class I legal advertisement giving notice of the hearing or hearings.

9.5. Commission consideration of proposed creation or alteration.

9.5.1. After public comment and hearing, if held, the Commission shall, by order, approve, disapprove or modify a county commission order creating, expanding, merging, consolidating, reducing or dissolving a public service district. In deliberating on approval, modification or disapproval the Commission may consider, among other things:

9.5.1.a. the public convenience and necessity;

9.5.1.b. the economic feasibility, including sources of funding, costs and related benefits of the county commission's order;

9.5.1.c. the adequacy of facilities;

9.5.1.d. other facilities in the area; and

9.5.1.e. other possible alternatives.

§150-5-10. Distressed and Failing Water or Wastewater Utilities.

10.1. Definitions – These definitions are specific to Section 10.

10.1.1. "Distressed Utility" – a water or wastewater utility that for financial, operational or managerial reasons:

(1)(a) Is in continual violation of statutory or regulatory standards of the Bureau for Public Health, the Department of Environmental Protection, or the Commission, which affect the water quality, safety, adequacy, efficiency or reasonableness of the service provided by the water or wastewater utility;

(b) Fails to comply within a reasonable period of time with any final, nonappealable order of the Department of Environmental Protection, Bureau for Public Health or the Commission concerning the safety, adequacy, efficiency or reasonableness of service, including, but not limited to, the availability of water, the potability of water, the palatability of water or the provision of water at adequate volume and pressure and the collection and treatment of wastewater;

(2) Is no longer able to provide adequate, efficient, safe and reasonable utility services; or

(3) Fails to timely pay some or all of its financial obligations, including, but not limited to, its federal and state tax obligations and its bond payments to the West Virginia Water Development Authority, the United States Department of Agriculture (USDA) or other bondholders; fails to maintain its debt service reserve; or fails to submit an audit as required by its bond or loan documents or state law.

10.1.2. "Failing water or wastewater utility" -- a public utility that:

(a) Meets the definition of a distressed water or wastewater utility; and either:

(b) Has not, after a reasonable time period, been stabilized and improved by corrective measures put in place under W. Va. Code §24-2H-7; or

(c) Has had the corrective measures suspended for good cause shown by an order of the Commission.

10.1.3. "Capable proximate water or wastewater utility" -- a public utility that regularly provides adequate, safe and reasonable service of the same type as the distressed utility and is situated close enough to the facilities of a distressed utility that operational management is reasonable, financially viable, and not adverse to the interests of the current customers of the non-distressed utility.

10.2. Potentially unstable water and wastewater utilities.

10.2.1. Commission Staff will review annual reports, rate case filings and other financial data available from public information or from the utility directly and prepare a list of water and wastewater utilities that appear to be financially unstable. This list will be updated annually. Commission Staff will provide the list to the Commission by interoffice memorandum by November 1st of each year.

10.2.1.a. After receipt of the list, the Commission may request from any water and wastewater utility current financial information, including bank statements, detail of accounts payable, detail of current and delinquent taxes payable, detail of pension funds, current debt payment and reserve fund status, and any other pertinent information that the Commission requires.

10.2.2. After the Commission finalizes the list, Commission Staff will contact each utility placed on the list to discuss the stability of the utility.

10.2.3. Each utility contacted shall respond to staff contacts in a timely manner, but in no less than 60 days. The utility shall indicate measures it plans to undertake to address the concerns of the Commission Staff regarding the potential instability of the utility.

10.2.4. Commission Staff will offer to provide advice and assistance to resolve any financial, managerial or operational issues that are contributing to the utility's potential instability.

10.2.5. Commission Staff shall periodically report to the Commission regarding the status of the unstable utility and any measures undertaken by the utility to address the potential instability.

10.3. Determination of whether a utility qualifies as a distressed or failing utility and the existence of one or more capable proximate public or private utilities.

10.3.1. The Commission may on its own motion, or upon a petition by Commission Staff or any other person or entity having a legal interest in the financial, managerial or operational condition of the utility, open a proceeding to investigate whether a utility is distressed or failing and to identify any capable proximate public or private utilities that may be able to acquire the utility.

10.3.1.a. The Commission will name as respondents the utility under investigation and any public or private utilities that may be a capable proximate utility.

10.3.2. The Commission will provide notice to named respondents by Order.

10.3.3. The Commission may, by Order, require any named respondent to file specific information in the form of documents, affidavits or prepared testimony.

10.3.4. The Commission will provide Commission Staff and other interested parties the opportunity to file testimony, participate in evidentiary hearings and file briefs in the proceeding.

10.3.5. To determine if a utility is a distressed or failing utility, the Commission will consider:

(1) The financial, managerial and technical ability of the utility;

(2) The level of expenditures necessary to make improvements to the water or wastewater utility to assure compliance with applicable statutory and regulatory standards concerning the adequacy, efficiency, safety or reasonableness of utility service and the impact of those expenditures on customer rates;

(3) The opinion and advice, if any, of the Department of Environmental Protection and the Bureau for Public Health as to steps that may be necessary to assure compliance with applicable statutory or regulatory standards concerning the adequacy, efficiency, safety or reasonableness of utility service;

(4) The status of the utility's bond payments and other financial obligations;

(5) The status and result of any corrective measures previously put into place; and

(6) Any other relevant matter presented by the respondent utilities, Commission Staff or other interested party.

10.3.6. To determine if a utility is a capable proximate utility, the Commission will consider:

(1) The financial, managerial and technical ability of all proximate public utilities providing the same type of service;

(2) Expansion of the franchise or operating area of a potential acquiring utility to include the service area of the distressed utility;

(3) The financial, managerial, operational and rate demands that may result from the current proceeding and the cumulative impact of other demands where the utility has been identified as a capable proximate utility; and

(4) Any other relevant matter presented by the respondent utilities, Commission Staff or other interested party.

10.4. Hearings and public notice.

10.4.1. The Commission will hold evidentiary and public comment hearing(s) in the service area of the utility under investigation.

10.4.1.a. The Commission will conduct the public comment hearing(s) to receive public comments, including, but not limited to, comments regarding possible options available to bring the potential distressed or failing utility into compliance with appropriate statutory and regulatory standards.

10.4.1.b. The Commission will conduct the evidentiary hearing to receive evidence to determine if the utility is a distressed or failing utility and whether a capable proximate utility should manage, operate, or acquire the utility. If there is more than one proximate utility the Commission will also receive evidence to allow the Commission to determine the appropriate capable proximate utility.

10.4.2. The Commission will give notice of the time, place and subject matter of the hearing as follows by:

(a) placing a Class I legal publication in a qualified newspaper pursuant to W. Va. Code §59-3-2(a) in the county or counties where the utility is located no more than 10 days before the date of the hearing;

(b) issuance of a press release; and

(c) providing written notice by certified mail or registered mail to the utility under investigation; the Consumer Advocate Division; any proximate utility that was made a party to the proceeding; the county commission if the utility under investigation is a public service district; and the municipality if the utility is owned and operated by a municipality.

10.4.3. The Commission will, by Order, direct the utility under investigation to give notice to its customers of the time, place and subject matter of the hearing either as a bill insert or in print on its monthly bill statement or, if neither form of notice is reasonably possible, by a separate mailing.

10.4.4. Following the evidentiary hearing, the Commission shall enter an order stating whether the utility is a distressed or failing utility and identifying the capable proximate utilities, if any.

10.5. Alternative, intermediate remedies for distressed or failing utilities.

10.5.1. Before designating a utility as failing, the Commission must determine if one or more of these alternative remedial actions, is reasonable and cost effective for the distressed utility or the capable proximate utility:

(1) reorganization of the utility under new management or a new board, subject to the approval of the applicable county commission(s) or municipal government;

(2) operation of the distressed utility by another public utility or management or service company under a mutually agreed arms-length contract subject to approval by the Commission pursuant to W. Va. Code §24-2-12;

(3) appointment of a receiver to manage the operations of the distressed utility;

(4) immediate merger of utility with one or more other public utilities, subject to the approval of the applicable county commission(s) or municipal government;

(5) acquisition of the distressed utility through a mutual agreement made at arms-length subject to Commission approval pursuant to W. Va. Code §24-2-12; and

(6) any viable alternative other than an ordered acquisition by a capable proximate utility.

10.5.2. The alternative remedial action or actions that may be ordered by the Commission are not mutually exclusive. The Commission may order an interim remedial action or actions pending subsequent final actions. The Commission may also order intermediate objectives within set time limits for certain actions and a time limit for achieving final objectives to remedy financial, managerial, or operating problems that are contributing to the utility being distressed or failing.

10.6. Commission ordered acquisition of a failing utility.

10.6.1. If the goals and objectives set by the Commission pursuant to Sewer Rule 10.5 are not met, the Commission may, without further hearing, determine that the utility is failing and direct an acquisition.

10.6.2. If the Commission determines that the utility is a failing utility and decides that it is in the public interest to forego any alternative remedial action, then the Commission may order the acquisition of the failing utility by the most suitable capable proximate utility, if there is more than one proximate utility.

10.6.2.a. If the distressed or failing utility is a public service district the Commission shall notify the respective county commission(s) with regard to the acquisition of the distressed or failing utility as provided in W. Va. Code §16-13A-2(a)(2).

10.6.2.b. If the distressed or failing utility is a municipal corporation, then the Commission shall notify the respective municipal council with regard to the acquisition of the distressed or failing utility as provided in W. Va. Code §8-12-17 .

10.6.3. If the Commission orders an acquisition, the Commission will provide a timeframe for the failing utility and acquiring utility to agree on acquisition terms, timing, and acquisition price.

10.6.4. Preceding the final acquisition, the Commission may order the capable proximate utility to assume control of the management and operations of the failing utility under a temporary management and operating agreement subject to Commission approval.

10.6.4.a. The Commission may direct a date for the filing of an agreement for Commission approval.

10.6.4.b. If the agreement is not filed when directed, the Commission may direct the capable proximate utility to file a proposed temporary management and operating agreement.

10.6.4.c. The failing utility may respond to the proposed agreement within the time limits set by the Commission,

10.6.4.d. The Commission may, without further filings or hearing establish the terms of an agreement, direct the capable proximate utility to immediately assume management and operations of the failing utility pending an acquisition and direct the failing utility to turn over its management and operations to the capable proximate utility.

10.6.5. Prior to acquisition, the failing utility shall cooperate with the capable proximate utility in negotiating agreements with state and federal agencies, including, but not limited to, negotiation of hold harmless agreements, consent orders or enforcement moratoria during any period of remediation.

10.6.6. The parties to an acquisition may propose to the Commission methods of determining the acquisition price and the parties will have the burden to show that a proposed method is reasonable and in the public interest.

10.6.6.a. The acquisition price must, at a minimum, satisfy all outstanding loans, tax obligations, required grant repayment, liens and indebtedness owed by the failing utility or the acquiring utility may agree to assume the indebtedness if legally permitted.

10.6.6.b. The acquiring utility may propose to pay failing utility outstanding obligations directly, as part of the acquisition consideration, and shall consult with the lenders or lienholders regarding payment in full or the assumption, to the extent legally permissible, of such obligations.

10.6.7. If bondholder consent is required to finalize an acquisition, the failing utility must cooperate with the acquiring utility in obtaining the consent of bondholder(s).

10.6.8. The acquiring utility must submit a financing plan that includes documentation on how the failing utility's indebtedness will be paid or assumed.

10.6.9. If the parties are unable to agree on an acquisition price or any other terms related to the acquisition within the time allowed by the Commission, the Commission may, on its own motion, or upon a petition by either the failing or capable proximate utility, conduct an evidentiary hearing to determine the acquisition price and any other issues related to the acquisition.

10.7. Rates pertaining to recovery of costs for acquisition, operation, repairs and improvements to distressed or failing utility facilities.

10.7.1. The acquiring utility shall propose the rates to be charged after acquisition.

10.7.2. Without a separate rate or tariff filing and without further notice to customers, the acquiring utility may adopt the rates of the acquired utility not subject to true-up but subject to adjustment in future rate proceedings.

10.7.3. The Commission may approve an appropriate and reasonable cost recovery mechanism to allow the capable proximate utility to recover its acquisition costs and projected cost of service of operating, maintaining and improving the facilities of the failing water or wastewater utility or its net costs incurred to operate, maintain, and improve the distressed utility under a Commission approved operating agreement.

10.7.4. Subject to Commission approval in a separate rate or tariff proceeding, which shall be considered by the Commission on an expedited basis without the need for a full base rate proceeding, the acquiring utility may request:

(a) that it be permitted for a reasonable period of time after the date of acquisition to apply a surcharge on the adopted rates or to establish a surcharge on the acquiring utility's tariff applicable only to customers of the acquired utility;

(b) a surcharge or surcharges on acquired customers and existing customers;

(c) that it be allowed to charge the customers of the acquired utility pursuant to a separate tariff which may be higher or lower than the existing tariff of the acquired utility; or

(d) a surcharge on its existing customers related to its costs as a capable proximate utility.

10.7.5. Subject to Commission approval and other rate provisions of this rule, if requested by the acquiring utility, a cost recovery mechanism determined by the Commission to be appropriate, reasonable and in the public interest may include:

(a) A surcharge above existing rates that allows recovery of incremental costs, net of recovery through existing rates necessary to operate, maintain and improve the failing utility's service level to an acceptable level and into compliance with all applicable regulatory standards;

(b) A rate base acquisition adjustment for private for-profit utilities as an incentive to acquire a failing utility;

(c) An increased return on investment as an incentive to acquire a failing utility; or

(d) Any other incentive method proposed by the acquiring utility if the method is determined by the Commission to be appropriate, reasonable and in the public interest.

10.7.6. Rate increments and surcharges, other than adoption of existing rates, approved by the Commission shall be subject to adjustment on an annual basis to reflect changes in costs, additional projected capital and operating costs and true-up of any over or under recoveries of costs.

Sewer Form No. 1
(Sewer Rule 6.8.2.)

(Insert Company Name Here)

NOTICE OF SCHEDULED TERMINATION OF SERVICE
AND CUSTOMER RIGHTS

We have scheduled your water service provided at _____
(address)
for termination on or after _____ because of your delinquent
(date)
sewer bill.

This action has been taken for the following reason(s):

(Include reason and facts resulting in decision to terminate service).

If your service is terminated you will be subject to the following additional charges involving reconnect fees and deposit requirements in order to restore service.

(Include all applicable charges, including disconnect, reconnect and/or administrative fees)

YOU HAVE THE RIGHT TO CHALLENGE THE TERMINATION IF YOU BELIEVE ANY OF THE FOLLOWING CONDITIONS APPLY TO YOU:

1. Any portion of the bill is in dispute
2. You are being charged for service not received
3. The information above is incorrect
4. You are unable to pay the bill in accordance with the billing, and termination of service would be especially dangerous to the health or safety of a member of your household
5. You are able to pay only in installments

If the reason for your challenge is 1, 2, or 3 above, you will have to pay any amount not in dispute. If the reason for your challenge is 4 or 5, we will attempt to negotiate a deferred payment agreement with you.

YOU MUST NOTIFY US BEFORE THE DATE OF TERMINATION IN ORDER TO PROTECT YOUR RIGHTS UNDER THIS RULE:

(Provide instructions for contacting the appropriate utility personnel by telephone and mail, including business hours)

You should also inform us if you are 65 years or older, or regardless of age, if you are physically, mentally, or emotionally incapacitated.

Once you have notified us of your challenge, we will schedule a meeting at the business office nearest to your residence and try to resolve your problem. At your option, the discussion of your challenge may be made over the telephone. **IF YOU ARE NOT SATISFIED WITH OUR DECISION AT THIS MEETING, YOU WILL HAVE SEVEN (7) DAYS IN WHICH TO FILE A CHALLENGE WITH THE PUBLIC SERVICE COMMISSION OF WEST VIRGINIA.** You will be required to pay your current bill while the challenge is pending. There is no charge associated with filing a challenge and you may do so without the assistance of an attorney.

To file a challenge with the PSC, you may call this toll free telephone number 1-800-642-8544 or write to this address:

Utility Challenge
Public Service Commission of West Virginia
P.O. Box 812
Charleston, W.Va. 25323

If you are in need of assistance to pay your bill you should contact the following agencies: (List agencies in service area).

If you desire the assistance of a lawyer with regard to the scheduled termination and are unable to pay for legal counsel, contact one of the following low income legal assistance organizations: (List agencies in service area).

Sewer Form No. 2
(Sewer Rule 6.8.2.h.)

NOTICE OF SCHEDULED TERMINATION

We have scheduled water service provided at _____
(address)
for termination on or after _____ because
(date)
of your landlord's delinquent sewer bill.

To notify the Public Service Commission, you may call this toll free telephone number, 1-800-642-8544, or write to this address:

Public Service Commission of West Virginia
P.O. Box 812
Charleston, WV 25323

If you desire the assistance of a lawyer with regard to the scheduled termination and are unable to pay for legal counsel, contact one of the following low income legal assistance organization: (List agencies in service area).

Sewer Form No. 3
(Sewer Rule 6.12.4.)

Public Notice of Filing of a Petition for Imposition of a Moratorium

Case No. _____
NAME OF UTILITY _____ ,
a public utility.

Petition for consent and approval for the imposition of a moratorium on the utility system.

PUBLIC NOTICE

On _____ , the _____
(date) [Name of Utility, Commission Staff, or governmental entity]
filed a petition with the Public Service Commission for approval of the imposition of a moratorium on _____'s _____
(name of utility) (water, sewer or other)
system serving _____
[describe areas served].
If approved, the moratorium would mean that no new customers could be served by the utility in these areas until the Commission lifts the moratorium. The _____
[name of petitioner]
claims that the imposition of a moratorium is appropriate because _____

_____
[describe reasons and describe any plans to alleviate the circumstances giving rise to the petition, and any estimate of a date when it would be appropriate for the Commission to lift the moratorium.]

Any person wishing to protest, support, make comment, or request a public hearing about the proposed moratorium should do so in writing. Written statements should be addressed to Executive Secretary, Public Service Commission, P.O. Box 812, Charleston, WV, 25323.

NAME OF UTILITY

Sewer Form No. 4
(Sewer Rule 7.4.5.b.)
Form of written request for service by a prospective customer or
a group of prospective customers located in the same neighborhood

Sewer ( ) Water and Sewer ( )

Previous Customer ( ) If so, when _____ New customer ( )
Name _____
Mailing address _____ Phone _____
Property location _____
Rent ( ) Own ( ) Other _____
If rent: Property owners name _____
Property owner's mailing address _____ Phone _____
Type of service: Residential ( ) Number in household _____
Commercial ( ) Type _____
Industrial ( ) Type _____
Applicant's place of employment _____

Employment address _____ Phone _____

Name of spouse _____

Spouse's place of employment _____

Spouse's employment address _____ Phone _____

I HEREBY AUTHORIZE SERVICE TO BE ESTABLISHED IN MY NAME AT THE ABOVE PROPERTY LOCATION AND AGREE TO PAY FOR SERVICE UNTIL DISCONTINUED BY MY REQUEST IN WRITING. I UNDERSTAND THAT THIS APPLICATION IS ACCEPTED SUBJECT TO THE AVAILABILITY OF SERVICE AT THIS LOCATION.

Applicant's signature _____

Date _____

Utility representative _____ Date _____

For office use only

Name _____ Account No. _____

Applicant ID _____

Sewer Form No. 4
Page 2 of 2

Deposit amount _____ Tap fee amount
Meter Size _____ Meter No.
Meter Route _____ Meter reading
Date on _____ Date off
Customer request ( ) Termination ( )

Sewer Form No. 5
(Sewer Rule 7.4.5.b.)

Form for use in determining cost estimate to extend sewer service

Date
The following estimate is in response to a request to extend the Utility's sewer facilities approximately _____ feet along _____ _____to serve a customer or customers who desire sewer service.

Cost Estimate

Sewer line (-- inch PVC) _____	feet @	$_____/foot	=	$_____
Excavation/installation _____	feet @	$_____/foot	=	$_____
Materials (fittings, valves, stone, etc.)			=	$_____
Permits/rights-of-way (Health, Highways, etc.)			=	$_____
Restoration (seeding, gravel, etc.)			=	$_____
Related cost (engineering, legal, etc.)			=	$_____
		TOTAL	=	$_____

Cost Share of Customers and Utility

A. Total estimated cost of extension $_____
B. Utility Share: (estimated total net revenue per customer calculated pursuant to Rule 5.5.e.4.) $_____ per customer x _____ customers = $_____
C. Customer share: estimated cost to be paid by customers (A-B) = $_____

Conditions

If the potential customers shall deposit with the Utility, in advance, the total sum of $_____, (customers share from "C" above), a tap fee of $_____ per customer, and a $_____ security deposit per customer, the Utility will apply for the necessary permit applications and begin construction as soon as possible.

If the actual cost to construct the extension is less than the estimated cost, the Utility will refund the difference to the original depositors. If the actual cost exceeds the estimated cost the Utility will bill the depositors for the difference.

The customers will be required to sign an application for service and/or a users agreement when the tap fees and deposits are made.

This main line extension estimate is made in accordance with Sewer Rule 7.4 of the *Rules for the Government of Sewer Utilities.*

Sewer Form No. 6
(Sewer Rule 7.4.5.b.)
Form of cost estimate to be
provided to applicants for service

Dear Customer:

We have received a petition for a sewer main extension and have estimated the construction cost to extend the main to serve the properties of the _____ (insert number) petitioners. This estimate is summarized below:

Sewer line _____ feet at $_____ / foot	_____
Excavation/Installation _____ feet at $_____ / foot	_____
Materials (fittings, valves, stone, etc.)	_____
Permits/Rights-of-way (Health, Highways, etc.)	_____
Restoration (seeding, gravel, etc.)	_____
Related Cost (engineering, legal, etc.)	_____
Total Estimated Extension Construction Cost	_____
Minus Utility's Share (estimated total net	
revenue per customer pursuant to Sewer Rule 7.4.5.d.)	_____
Estimated Cost to be Paid by Customers	_____
Estimated Cost per Customer	_____

When the "customer's share" referenced above is deposited with the Utility, the Utility will apply for the necessary permit applications and begin construction as soon as possible. If the actual cost to construct the extension is less than the estimated cost, the Utility will refund the difference to the original depositors. If the actual cost exceeds the estimated cost, the Utility will bill the depositors for the difference. This difference must be settled before service can actually be connected.

All customers will be required to sign an extension agreement and an application for service and/or a users agreement and pay a tap fee of $_____ , and a security deposit of $_____ prior to receiving service. The security deposit is refunded with interest following twelve consecutive months of full and timely payments for services rendered.

The estimated start date of construction is _____.

The estimated duration of construction is _____ days.

Should you have any questions, you may contact Barbara Manager or John Foreman at _____ between 9:00 a.m. and 4:00 p.m., Monday through Friday.

Sincerely,

Sewer Form No. 7
(Sewer Rule 7.4.8.g.)
Form of Commission Check-List for Alternate Main Extension Agreements

This form sets forth the minimum amount of information that should be included in a proposed alternate main extension agreement.

❑ 1. Name of developer, mobile home park owner or prospective customers(s).

❑ 2. General location or description of area to be served.

❑ 3. Indication that the developer, owner or prospective customer(s) has/have read Water Rule 7.5, Sewer Rule 7.4, or both.

❑ 4. Indication that the developer, owner or prospective customer(s) understand(s) the Rules.

❑ 5. Having read and understood the Rules, the developer, owner or prospective customer(s) choose(s) to enter into the alternate main line extension agreement.

❑ 6. If the developer, owner or prospective customer(s) waive(s) reimbursement, the agreement should contain the waiver.

❑ 7. A copy of the applicable Rule(s) must be attached to the agreement.

❑ 8. A statement as to who will bear the cost of inspection, if any.

❑ 9. If the customer is to bear the cost of inspection, a statement of the maximum amount of the cost of inspection.

❑ 10. If the developer, owner or prospective customer(s) wish(es) to waive the right of receiving an estimate of the cost of the extension if constructed by the utility, a statement reflecting the waiver.

❑ 11. A statement as to the type of testing to be required.

❑ 12. A statement as to who will bear the cost of testing, if any.

❑ 13. If the customer is to bear the cost of the testing, a statement of the maximum amount of the cost of the testing.

❑ 14. A statement as to who will install the service connections.

❑ 15. If the developer, owner or prospective customer(s) is/are to install the service connections, a statement that the utility will not charge a tap fee.

❑ 16. A statement that the tap fee, if any to be charged, is the approved tap fee in the utility's tariff.

❑ 17. A statement that the utility is to be indemnified and held harmless against any and all claims for injuries and/or damages which may arise from problems associated with the construction of the extension by the developer, owner or prospective customer(s).

Sewer Form No. 7
Page 2 of 2

- ❑ 18. A statement that the ownership of the extension will be conveyed to the utility prior to its connection to the utility's system.
- ❑ 19. A statement indicating who will be responsible for preparing the plans for the extension.
- ❑ 20. If the developer, owner or prospective customer(s) is/are to be responsible for the preparation of the plan for the extension, a statement that the developer, owner or prospective customer(s) will provide plans to the Staff of the Public Service Commission if required.
- ❑ 21. The number of prospective customers to be served by the extension, the number of lots to be served, or some other general indication of the size of the area to be served by the extension.
- ❑ 22. If the initial cost estimate has not been waived, the estimate must be set forth in the agreement.
- ❑ 23. A warranty indicating that the developer, owner or prospective customers will warrant the system for a period of one year after completion of the construction, or after system is placed into service.
- ❑ 24. The agreement should not be executed before being sent to the Commission for approval.
- ❑ 25. A statement as to who will obtain and pay for necessary permits.
- ❑ 26. A statement as to who is responsible for the cost of the construction.
- ❑ 27. A statement as to who is responsible for the cost of the material.
- ❑ 28. A statement describing the extension, including length, diameter and any major components such as fire hydrants, etc.

NOTE: A paragraph such as "The Developer/Customer waives all rights under Rule 7.3 or 7.4." will not be acceptable as a catch-all for the requirements listed above. Each item must be addressed in the agreement.

Sewer Form No. 8
(Sewer Rule 9.3.)

PUBLIC SERVICE COMMISSION
OF WEST VIRGINIA
CHARLESTON

At a session of the Public Service Commission of West Virginia, in the City of Charleston, on the ___ day of [month], [year].

[Case No.]

[Case Name]

NOTICE OF FILING

On [date], the [name of party] filed a petition for consent and approval to [type of creation/alteration] the boundaries of the [description of area to be created, enlarged, reduced, merged, dissolved or consolidated] pursuant to W. Va. Code §16-13A-2. A complete description of the boundary [type of creation/alteration] is on file with the [identify entity with which information is filed (for example, county commission and/or public service district)] and the West Virginia Public Service Commission.

Anyone desiring to protest or intervene should file a written protest or notice of the intervention within 30 days following the date of this publication. All protests or requests to intervene should briefly state the reason for the protest or intervention. Requests to intervene must comply with the Commission's rules on intervention, set forth in the Commission's *Rules of Practice and Procedure*. All protests and interventions should be addressed to Sandra Squire, P. O. Box 812, Charleston, West Virginia 25323. If no substantial protest is filed, the Commission may approve the County Commission's Order without hearing.

[Name of Party]

WEST VIRGINIA SECRETARY OF STATE

MAC WARNER

ADMINISTRATIVE LAW DIVISION

eFILED

7/16/2021 10:53 AM

Office of West Virginia
Secretary Of State

NOTICE OF FINAL FILING AND ADOPTION OF A LEGISLATIVE EXEMPT, INTERPRETIVE OR PROCEDURAL RULE

AGENCY: Public Service Commission

TITLE-SERIES: 150-07

RULE TYPE: Legislative Exempt

Amendment to Existing Rule: Yes

Repeal of existing rule: No

RULE NAME: Rules for the Government of Water Utilities

CITE STATUTORY AUTHORITY: 24-1-1, 24-1-7, 24-2-1, 24-2-2, and 24-2H-1

This rule is filed with the Secretary of State. This rule becomes effective on the following date:

September 14, 2021

BY CHOOSING 'YES', I ATTEST THAT THE PREVIOUS STATEMENT IS TRUE AND CORRECT.

Yes

Jane Neal -- By my signature, I certify that I am the person authorized to file legislative rules, in accordance with West Virginia Code §29A-3-11 and §39A-3-2.

TITLE 150
LEGISLATIVE RULE
PUBLIC SERVICE COMMISSION

SERIES 7
RULES FOR
THE GOVERNMENT OF
WATER UTILITIES

§150-7-1. General.

1.1. Scope. -- These rules govern the operation and service of water utilities subject to the jurisdiction of the Public Service Commission pursuant to W. Va. Code §24-2-1.

1.2. Authority. -- W. Va. Code §§24-1-1, 24-1-7, 24-2-1, 24-2-2, and 24-2H-1.

1.3. Filing Date. -- July 16, 2021.

1.4. Effective Date. -- September 14, 2021.

1.5. General.

1.5.1. These rules replace rules that went into effect on May 8, 2011.

1.5.2. These rules are intended to ensure adequate service to the public, to provide standards for uniform and fair charges and requirements by the utilities and customers, and to establish the rights and responsibilities of utilities and customers.

1.5.3. Adoption of these rules in no way precludes the Commission from altering or amending them in whole or in part, or from requiring any other or additional service, equipment, facility, or standard either upon complaint or upon its own motion, or upon the application of any utility.

1.5.4. These rules shall not relieve in any way a utility from any of its duties under the laws of this State.

§150-7-2. Application of rules.

2.1. These rules apply to all public utilities as defined in Water Rule 3.

2.1.1. If hardship results from the application of any Water Rule or if unusual difficulty is involved in immediately complying with any rule, application may be made to the Commission for the modification of the rule or for temporary or permanent exemption from its provisions: Provided, that no application for modification or exemption will be considered by the Commission unless there is submitted therewith a full and complete justification for such action.

§150-7-3. Definitions.

3.1. "Applicant" -- A person, firm, corporation, municipality, public service district or any other entity that applies for water service.

3.2. Billing Related Dates.

3.2.1. "Bill due date" -- The date when the utility mails the bill.

3.2.2. "Latest pay date" -- The last date that the bill may be paid without incurring a late payment penalty. The last date shall be no sooner than the 20th day following the date the utility mails the bill and must be stated on the face of the bill.

3.2.3. "Delinquent bill" -- Any bill issued by a public service district or a municipal system that has not been paid within twenty (20) days of the bill due date; or any bill issued by a water utility that is not a public service district or a municipal system within thirty (30) days of the bill due date. The date that a bill will become delinquent must be stated on the face of the bill.

3.3. "Commercial Service" -- Service to each separate business enterprise, occupation or institution occupying for its exclusive use any unit or units of space as an entire building, entire floor, suite of rooms or a single room, and using water for such incidental use as the schedule of rates applicable to the particular installation may permit. Commercial service shall apply to all stores, offices, hotels, wholesale houses, garages, display windows, signs, theaters, barber and beauty shops, churches, opera houses, auditoriums, lodge halls, school houses, banks, bakeries and any other space occupied for commercial purposes. Any rooming house, lodging house, resort, inn or tavern renting more than four (4) rooms to strangers or transients without any previous agreement for accommodation or as to the duration of stay shall be classed as a hotel and as such it comes under the commercial classification.

3.4. "Commission" -- Whenever in these rules the words "Commission" or "Public Service Commission" occur, such word or words shall, unless a different intent clearly appears from the context, be taken to mean the Public Service Commission of West Virginia.

3.5. "Customer" -- Any person, firm, corporation, municipality, public service district or any other entity who/that purchases a product or services from any utility including any such person, firm, corporation, municipality, public service district or any other entity who purchases such services or product for resale.

3.6. "Customer's Service Pipe" -- That portion of the service pipe from the point of service to the structure or premises supplied.

3.7. "Distribution Main" -- Water pipe owned, operated, or maintained by the utility which is used for the purpose of distribution of water from which utility service pipes extend to make service connections with customers at the point of service.

3.8. "Governmental Unit" -- Any municipality or other political sub-division or agency of the State of West Virginia or the Federal Government.

3.9. "Moratorium" -- A condition imposed on a utility by the Commission prohibiting service connections and/or reactivation of service for an entire system, or a portion thereof.

3.10. "Payment" -- Payment is made by any legal form of payment, including vouchers, that the utility accepts.

3.11. "Point of service" -- The point at which the utility's pipe and appurtenances connect the utility service pipe with the inlet connection of a customer's service pipe at or near the customer's property line,

or elsewhere if provided for in a user's agreement. The utility shall own and maintain all facilities located between the point of service and the main.

3.12. "Private Fire Service Connection" -- Is one to which is attached fixtures from which water is taken in whole or in part for the extinguishment of fire.

3.13. "Public Utility" -- Except where a different meaning clearly appears from the context, the word or words "utility" or "public utility" when used in these rules shall include any person or persons, or association of persons, however associated, whether incorporated or not, including municipalities, engaged in the business of producing, furnishing, transporting, distributing or selling water for any purpose which is now or may hereafter be held to be a public service.

3.14. "Residential Service" -- Service to a householder or a tenant, living in a separate house or separate apartment in an apartment building, using water for general household service. If an owner of a multiple apartment building undertakes to furnish water to tenants as a part of the tenants' monthly rent, then such service shall be classed as "Commercial." However, a close branch of a householder's family living with the householder and using the same water facilities, shall not be classified as an additional service or as "Commercial." In cases where a householder or tenant devotes some portion of the occupied building to commercial use and uses the remainder as a residence then the predominate use of water shall constitute the basis for classification as either residential or commercial.

3.15. "Standard Distribution Pressure" -- The distribution pressure established by the utility under the requirements of Water Rule 7.8.

3.16. "Temporary Service Connection" -- A connection installed for the temporary use of water, provided that the customer's premises is located on a lot having a curb line abutting a street or public right-of-way in which is located a utility distribution main extending along the total frontage of the lot on said street or right-of-way, unless otherwise agreed to by the utility.

3.17. "Water Losses" -- The volume of water introduced into the distribution system less all metered usage and all known non-metered usage which can be estimated with reasonable accuracy.

3.18. "Utility Service Pipe" -- That portion of the service pipe between the distribution main and the curb cock or the inlet connection of the coppersetter at or near the customer's property line or point of service regardless of the side of the road on which the customer is located in reference to the main line.

§150-7-4. Records, Reports and Other Information to be Supplied to the Commission.

4.1. Records and reports.

4.1.1. Preservation of records. -- All records required by these rules shall be preserved by the utility in the manner prescribed by the Commission.

.

4.1.2. Location of records.

4.1.2.a. Required records shall be kept at the office(s) of the utility in West Virginia, and shall be available during the utility's regular business hours for examination by the Commission or its duly authorized representative.

4.1.2.b. If kept outside the State, records shall be brought to the utility's office in West Virginia upon request of the Commission, or the utility may be required to pay the reasonable traveling expenses of Commission employees assigned to examine the records.

4.1.3. Reports to Commission. -- Upon Commission request, a utility shall furnish to the Commission the results of any test or tests required to be made, or the information contained in any records required to be kept by the utility, or any further information in its possession, respecting its rates, charges, or practices, without formal order of the Commission requiring the release of such information.

4.2. Filing of rate schedules.

4.2.1. Tariffs containing rates and rules of each utility shall be filed in the manner prescribed by the Commission in "Rules and Regulations for the Construction and Filing of Tariffs," 150CSR2 (Tariff Rules) effective as amended or modified by the Commission.

4.2.2. Municipal rates. -- Rates for municipal water and combined water and sewer utilities shall be adopted, and tariffs shall be filed, in accordance with the Commission's Tariff Rules, effective as amended or modified by the Commission.

4.3. Utility's special rules.

4.3.1. A utility desiring to establish any rule(s) supplementing the rules of the Commission shall first make application to the Commission for authority to establish such a rule(s), clearly stating the reasons for the rule(s).

4.3.2. On and after ninety (90) days from the effective date of these Rules, any utility's special rules and regulations now on file with the Commission which conflict with these rules, will become null and void, unless they have been refiled after the effective date of these rules and approved by the Commission.

4.3.3. Exemption. -- A customer who has complied with the rules of the Commission shall not be denied service for failure to comply with the rules of the utility that have not been approved by the Commission.

4.4. Financial and statistical report.

4.4.1. Every utility shall file annually a financial and statistical report with the Commission. The report shall be based upon the accounts set up in conformity with Water Rule 4.5. The report shall be filed on or before three (3) months following the end of the utility's fiscal year or on such date as the Commission may direct. The form requirement will be specified in the annual letter sent by the Commission to utilities. The report shall be filed utilizing the form template and filing instructions that can be found on the Commission web site.

4.4.2. Upon written request and for good cause shown, the Commission may approve or disapprove, through its Executive Secretary, by letter, a reasonable extension of time to file the financial and statistical report. A utility shall apply for an extension before the expiration of the time for filing the report.

4.5. Uniform system of accounts.

4.5.1. All water utilities shall maintain all accounts and records in compliance with the Uniform System of Accounts as promulgated in 1996 by the National Association of Regulatory Utility Commissioners for Class A, B, and C Water Utilities.

4.5.2. All persons having direct charge of the books and accounts of the utility must observe system of accounts applicable to the water utility by appropriate class. For the purpose of securing uniformity in the applications of this system all questions of doubtful interpretation of accounting rules are to be submitted to the Commission for consideration and decision.

4.5.3. The classification of water utilities for purposes of keeping accounts in accordance with the Uniform System of Accounts shall be as follows:

Classification	Revenue Level
A	$1,000,000 or more
B	$200,000 - $999,999
C	less than $200,000

4.6. Maps and records.

4.6.1. Each utility shall keep on file suitable maps, plans and records showing the entire layout of every pumping station, filter plant, reservoir, transmission and distribution system, with the location, size and capacity of each plant, size of each transmission and distribution line, fire hydrant, valve and customer's service, reservoirs, tanks and other facilities used in the production and delivery of water.

4.6.2. In the case of new construction or property acquired from others, a utility shall reflect the changes in the maps and records by the end of the next calendar year following the year the construction is done or property acquired. All drawings shall have the scale clearly shown and be of sufficient detail to accurately depict the project or property.

4.6.3. In general, where present maps of existing facilities are not entirely up to date, special surveys to locate any plant or facilities will not be required immediately, but maps must be updated as prescribed by the Commission.

4.7. Management audits.

4.7.1. Scope. -- To establish a procedure for examination of management practices and policies to determine whether the utility being audited is operating with efficiency and utilizing sound management practices. The purpose of a management audit is to disclose operating areas that are efficient or inefficient, to identify areas for improvement, and to form recommendations for changes. The results of a management audit and the response of the utility to the recommendations and implementation plans developed pursuant to a management audit may be a factor in determining just and reasonable rates, as set out herein.

4.7.2. Types of management audits. -- The following types of management audit, which vary in scope, may be directed and used by the Commission:

4.7.2.a. Comprehensive. -- An investigation characterized by an extensive, detailed analysis of a utility's management and operations.

4.7.2.b. Reconnaissance. -- A broad review, similar in scope to a comprehensive audit, but in less detail. The objective of this type of audit is to identify specific areas for more intensive investigation based upon the magnitude of the problem identified or the potential benefits to be derived.

4.7.2.c. Focused. -- An in-depth investigation of one or several specific areas of a utility's management and operations.

4.7.3. Frequency. -- The Commission shall order a management audit of any utility under its jurisdiction whenever the Commission deems it necessary to investigate the operational efficiency of the utility. Such factors as the cost of the management audit and the potential benefits of such audit may be taken into consideration. The Commission may accept or request a management audit performed under the rules of another jurisdiction in satisfaction of this rule when that audit is of the scope contemplated by the Commission, conforms to the standards herein set forth, and covers the utility's service functions in its West Virginia jurisdiction.

4.7.4. Conduct and control.

4.7.4.a. The Commission may choose to have the audit performed by its Staff or contracted to a qualified outside auditing firm. In the latter case, the Commission may supervise the selection process. If the management audit is to be conducted by an auditing firm, the Commission's order initiating the audit shall include provision for the development of the request for proposal (RFP), the consultant selection process and Staff's assistance and supervision during the audit.

4.7.4.b. The Commission may impose eligibility restrictions upon contractors relating to past, current and post-audit relationships with the utility.

4.7.4.c. The utility is expected to cooperate to the fullest extent with the performer of a Commission ordered management audit. A responsible employee shall be appointed by the utility as its management audit coordinator, who shall be responsible to assist in the efficient performance of the management audit.

4.7.5. Costs. -- The audited utility is responsible to pay for a contracted audit. The Commission shall include the reasonable cost of conducting the contracted management audit in the cost of service of the utility. The Commission may allow such costs to be recovered in the utility's next general rate case following completion of the audit, or the Commission may order such costs to be amortized over a reasonable period of years, considering the impact of these costs on both the utility and its customers.

4.7.6. Implementation of recommendations.

4.7.6.a. Draft report.

4.7.6.a.1. Upon completion of the audit the auditor will submit a draft report to the utility for comments.

4.7.6.a.2. The auditor and utility representatives shall conduct a draft review meeting subsequent to the distribution of the draft review report.

4.7.6.b. Final report.

4.7.6.b.1. The auditor will submit a final report to the Commission no later than thirty

(30) days after the submission of the draft report to the utility.

4.7.6.b.2. Within thirty (30) days of the final submission of the management audit report, the utility shall file a document detailing its position on each audit recommendation. This document must state which recommendations are acceptable to the utility and the nature of the utility's disagreement with any recommendations.

4.7.6.c. The Commission may, after hearing, issue an order prescribing the recommendations that should be adopted by the utility.

4.7.6.d. The utility shall file detailed implementation plans for Commission review and approval within the time specified in the Commission's order prescribing the recommendations that the utility should adopt. The utility shall not deviate from an approved implementation plan without prior notice to the Commission that specifically states the utility's reasons for departing from the approved plan. The utility shall obtain Commission approval prior to any deviation from the approved plan.

4.7.6.e. At the direction of the Commission, a follow-up audit may be performed to review the progress of the utility in implementing the approved plans and the results of previously performed management audits.

4.7.6.f. A management audit report, the resulting implementation plan and any follow-up audit may be used by parties in a general rate case subsequent to the management audit. Audits and implementation plans may be a factor in the determination of just and reasonable rates if introduced as an exhibit and subjected to normal due process procedures.

4.7.6.g. The Commission may grant an extension of the time limits established in this section upon a showing of good cause for such extension.

§150-7-5. Meter Requirements.

5.1. Utility to provide meters. -- Unless otherwise authorized by the Commission, each utility shall provide and install at its own expense (except as provided in Water Rules 6.1.6.d. and 7.2.) and shall continue to own, maintain, and operate all equipment necessary for the regulation and measurement of water, in accordance with tariff or contract provisions, to its customers. Where a customer requests additional meters for the customer's convenience and the utility furnishes additional meters, the utility may impose a charge. A utility will own and operate any meters used to serve a bulk or resale customer(s).

5.2. Location of meters.

5.2.1. Accessibility. -- In the interest of safety and convenience to the customer, and as a measure of economical operation to the utility, it is required that all meters should be located at or near the property line: provided that when such location is impractical meters shall be placed outside of the customer's building as near as possible to where the "Point of Service" joins the "Customer's Service Pipe": provided, further, if neither of the foregoing requirements can be complied with on account of physical, economic, or climatic conditions, the meter may be placed within the building, preferably in the cellar, and when so placed within the building, the meter shall be so located that it will be easily accessible for reading, maintenance and protected from freezing and mechanical damage.

5.2.2. Meter grouping. -- When a number of meters are grouped, every meter shall be tagged so as to indicate the particular customer served by it.

5.2.3. Remote meters. -- When a meter is located inside a home or building, the utility may install a remote register or dial on the exterior of a home or building accessible for meter reading. The remote counter reading shall be compared to the actual meter register reading not less than once every six (6) months.

5.2.4. Meter setting installation. -- Meter settings shall be installed in accordance with drawings submitted and approved by the Commission under Water Rule 7.2.9.

5.3. Prohibitions on master metering.

5.3.1. Mobile home parks. -- For mobile home parks constructed on or after October 24, 2003, each mobile home in a mobile home park shall be individually metered with taps installed at the lot line of each mobile home. The lot owner shall be responsible for payment of any applicable tap fees. All utility easements and mains constructed within the mobile home park will become the property of the utility by agreement between the (i) owner of the mobile home park or the lot owner, whichever is applicable, and (ii) the utility. The agreement must be approved by order of the Commission prior to construction of any main. Lines extending from the mobile home to the tap will be considered customer service lines and maintenance of those lines will be the responsibility of the applicable lot owner.

§150-7-64. Customer Relations.

6.1. Customer information.

6.1.1. Information as to service. -- Each utility shall, upon request, give its customers such information and assistance as is reasonable, in order that customers may enjoy safe and efficient service.

6.1.2. Explanation of meter readings. -- Each utility shall adopt some means of informing its customers as to the method of reading meters, either by a printed description on its bills, or by a notice to the effect that the method will be explained at the office of the utility upon request. It is recommended that an exhibition meter be kept on display in each sales office maintained by a utility.

6.1.3. Explanation of rates. -- It shall be the duty of the utility to explain to the customer at the beginning of service, or whenever the customer shall request the utility to do so, the utility's rates applicable to the type of service furnished to the customer and all other classes of customers, and to assist the customer in obtaining the best rate for the customer's service requirements. The responsibility for the selection, however, rests with the applicant. In the event the customer's use of service changes such that a rate schedule other than the one initially selected becomes favorable, the responsibility for requesting a change in rate schedule, consistent with the provisions of the service agreement, shall rest with the customer. The utility shall, on its periodic statements, annually inform its customers that, if requested by the customer, the utility shall supply the customer with a copy of the utility's rate or rates applicable to the type of service to be furnished to all classes of customers with a concise written explanation of the rates, and an identification of any classes of customer for whom rates are not summarized.

6.1.4. Posting of law, rates, rules and collection agents.

6.1.4.a. Every utility shall maintain in its office for inspection by the public the following:

6.1.4.a.1. A copy of the rates and rules of the utility, and of forms of contracts and applications applicable to the territory served from that office.

6.1.4.a.2. A copy of the Public Service Commission Law of this State.

6.1.4.a.3. A copy of these rules.

6.1.4.b. A utility shall exhibit a suitable placard, in large type in a conspicuous location, giving information to customers that the utility has a copy of the law, the rules of the Public Service Commission applicable to the utility and the schedules of rates available for customer inspection.

6.1.4.c. Once a year, or as often as a utility changes collection agents, each utility shall publicize by newspaper or bill insert to its customers its collection agents to whom customers may deliver payment of water bills.

6.1.5. Applications for water service.

6.1.5.a. All applicants desiring water service may be required to make written application at the office of the utility on printed forms provided therefor, setting forth in said application all purposes for which water will be used upon the applicant's premises. The utility may require the applicant to provide identification at the time of application for service. All applicants for service are required to designate on every application for service whether the applicant is a tenant or an owner of the premises to be served. If the applicant is a tenant, the applicant shall state the name and address of the owner or owners of the premises to be served.

6.1.5.b. Any change in the identity of the contracting customer at a premises will require a new application for water, and the utility may, after reasonable notice, discontinue water service until such new application has been made and accepted, but the former customer shall remain liable for water furnished to said premises until the customer has given notice in writing to the utility to discontinue water service. In the event the customer of record has died or has become incapable of being responsible for water service, that individual's spouse may become the customer of record without being required to complete a new application for water service, or paying a new deposit.

6.1.5.c. Except as provided in Water Rule 6.8.3.b., a utility will not charge to turn on water during regular working hours for a new customer or a current customer transferring service to a new location.

6.1.5.d. The utility's approval of an application for water to be supplied to any premises shall constitute a right to the customer to take and receive a supply of water for said premises for the purposes specified in such application; (i.e. Residential, Commercial, and Industrial) subject only to the fulfillment of the conditions of these rules by the customer.

6.1.5.e. In the event that a public service district providing sewer service owns and operates facilities within the same service territory as the publicly or privately owned water utility, city, incorporated town, other municipal corporation or other public service district providing water service to the area, then an application shall not be complete until such time as the applicant provides a receipt from the sewer public service district showing that, where the applicant is legally required to do so, proper application for sewer service has been made and a security deposit paid thereto. Upon receipt of said proof from the applicant, or upon a showing that the applicant is not legally required to apply for sewer service or pay a security deposit, the water utility shall notify the sewer public service district, in writing, the date upon which water service is scheduled to be turned on to the applicant. Said written notification to the sewer public service district shall be made within five (5) days, excepting Saturdays, Sundays, and state or federal holidays, of the date that the application for water service is deemed complete.

6.1.6. Special applications to a utility for water service.

6.1.6.a. An applicant must specifically apply to the utility for water for building, construction or other temporary purposes.

6.1.6.b. An applicant must specifically apply to the utility for a connections for private fire service.

6.1.6.c. Where an applicant desires water for only a short period of time, and not continuously throughout the year, such as for vacation homes or cottages, building purposes, street paving, cleaning property, filling tanks or other short-term uses, an application shall be made to the utility as set forth in Water Rule 6.1.5., and payment made in accordance with the applicable schedule of rates and charges, in which case a suitable deposit shall be made.

6.1.6.d. Whenever a street service connection is made to the mains for temporary service or for temporary private fire service, the applicant shall bear the entire cost and expense of labor and material for tapping the main and installing the service pipe and meter and its removal, if required.

6.1.7. Private fire protection service.

6.1.7.a. The applicant shall furnish the utility with one set of complete drawings prior to the completion of the tap, showing the pipes, valves, hydrants, tanks, openings, and appurtenances contemplated in the application. Such sketch must also show any other water supply system, pipelines and appurtenances existing on the premises. There shall be no connection between such other supply and pipes connected to the utility's mains unless protected by a backflow prevention device approved by the utility, or the Bureau for Public Health.

6.1.7.b. The utility shall not approve an application for private fire protection service unless the utility determines that its system provides an adequate size water main with sufficient water volume and pressure. Prior to the installation of a private fire protection system, a flow test shall be performed as required by the State Fire Code, specifically as described within the incorporated National Fire Protection Association (NFPA) Standard 291, to determine the water supply and pressure available in the utility's water main. The private fire protection system shall be designed by the applicant based on the results of this flow test, with the understanding that the results of a particular test may not consistently be available on the utility's system. The applicant shall be responsible for the cost of the flow test.

6.1.7.c. The customer shall obtain the approval of the utility in advance for any change, alteration or addition in the fixtures, openings and uses specified in the application. The customer shall make its fire protection facilities available to the utility at all reasonable times.

6.1.7.d. The utility shall determine the size and location of any connections made to its distribution mains for private fire protection service, and will, at the cost and expense of the customer, make the connection to its mains and install the service connection from the distribution main to a point at or near the property line.

6.1.7.e. The extent of the rights of the private fire protection service customer is to receive, but only at times of fire on his premises, the available water supply. The utility shall not be considered an insurer of property or persons, or to have undertaken to extinguish fire or to protect any persons or property against loss or damage by fire or otherwise, and shall be free and exempt from any and all claims

for damages on account of injury to property or persons by reason of fire, water, failure to supply water or pressure, or for any other cause whatsoever.

6.1.7.f. Unless otherwise provided in a written agreement between the applicant and the utility, service lines for private fire protection service shall be distinct and separate from the regular or general water service line. A private fire service connection is furnished for the sole purpose of supplying water for the extinguishment of fires, and the use of water from such a connection for any other purpose is absolutely forbidden.

6.1.7.g. Where the applicant and the utility have entered into a written agreement that one service pipe be used for both general and fire purposes, the utility may set minimum construction standards and specifications for the applicant's portion of the dual purpose service pipe, and may require that its construction be subject to inspection by the utility.

6.1.7.g.1. At the building to be served, the common service pipe shall separate into two service pipes, one for private fire protection and the other for general water service unless the private fire protection service is for a residential one- or two-family dwelling. Residential one- and two-family dwelling Life Safety fire sprinkler systems based on the State Fire Code, standard NFPA 13D may be provided through the general water service connection. The utility will, at its cost and expense, install and maintain a water meter of appropriate size on the general water service pipe and the necessary piping and fitting for the meter setting. All dual purpose service lines must comply with all applicable Bureau for Public Health standards and regulations.

6.1.7.g.2. The utility will charge the applicant for general water service based on the consumption through and size of the water meter installed, in accordance with its schedule of rates for general water service with the exception that a residential one- or two-family Life Safety fire service supplied through a residential service meter shall be provided with a one-inch meter and shall be charged based on the consumption through the meter. The minimum charge shall be based on a meter size no greater than the size of meter that would have otherwise been needed without residential fire service. It shall be understood that this increased meter size is due to the potential volume necessary for a residential Life Safety fire service and for no other purpose. The applicant shall be responsible for the additional cost of materials for the one-inch service over the service size that would have otherwise been needed without a residential fire service. Except as otherwise provided in this rule, the utility shall, subject to Commission approval, charge the applicant for private fire protection service in accordance with its schedule of rates for such service.

6.1.7.h. The customer shall furnish and install at the customer's expense a gate valve and curb box, or a post indicator and gate valve controlling the entire supply at the curb or property line of the street in which the main is located or at such other points as may be approved by the utility. If required by the utility, the customer shall furnish and install at the customer's expense the valve in a valve pit or vault.

6.1.7.i. The utility shall ensure that service lines supplying private fire protection systems, are protected by a minimum of two approved check valves. One of these check valves may be the alarm check provided as part of the system. The other may be a detector check, double check valve assembly, or an approved single check valve. Specific requirements and/or installation procedures are governed by the Bureau for Public Health but the utility's backflow prevention requirements shall be no more stringent than the minimum standards necessary to protect the utility's main(s).

6.1.7.j. Under no circumstances will anti-freeze be permitted in the sprinkling systems unless a reduced pressure zone backflow preventer, approved by the utility or the Bureau for Public Health, is

provided at the point of connection in the anti-freeze system.

6.1.7.k. The entire private fire service system on the customer's premises shall be installed and maintained by and at the expense of customer and shall be subject to the inspection, test and approval of the utility before the service is made effective, and at such times thereafter as the utility deems necessary or appropriate.

6.1.7.l. The utility may seal hydrants and other fixtures connected with a private fire service system, and such seals may be broken only in case of fire or as specially permitted by the utility, and the customer shall immediately notify the utility of the breaking of any such seal.

6.1.7.m. Whenever a fire service system is to be tested, the customer shall notify the utility of the proposed test, designate the day and hour when same is to be made, so that, if desired, the utility may have an inspector present during the test.

6.1.8. Public fire service.

6.1.8.a. Any governmental unit located in the utility's service area by ordinance of its Council or by resolution of its Board of County Commissioners shall have the right to order the installation of additional fire hydrants on existing utility owned mains having an internal diameter of six (6) inches or larger and the utility will install such hydrants at its own cost and expense; provided the estimated gross receipts from such proposed new fire hydrant rentals shall equal or exceed twelve percent (12%) annually of the cost of said installations.

6.1.8.b. Where pipeline installations are required to carry out an order of any governmental unit located in the utility's service area to install fire hydrants, or where existing utility owned mains, in the opinion of the utility, are inadequate to provide fire flows to such hydrants, and when any governmental unit located in the utility's service area orders the installation of a water main of adequate size to provide such flows to the hydrant or hydrants so ordered, the utility will install such mains and hydrants at its own cost and expense; provided that the utility shall not be required to make extensions of said water mains unless the estimated gross receipts from private consumers and from such proposed new public fire service fire hydrant rentals shall equal or exceed twelve percent (12%) annually of the cost of such mains and hydrants.

6.1.8.c. Non-emergency use of a fire hydrant is prohibited unless there has been made advance notification of such proposed use by the user to the utility, and the utility has provided prior written approval of such use to the user. The utility shall charge its tariff rate for domestic water usage for all non-emergency fire hydrant water usage.

6.2. Customer deposits.

6.2.1. Security deposits.

6.2.1.a. Security deposits for utilities other than public service districts. -- A utility, other than a public service district may require the applicant or customer to make a deposit with it initially, and from time to time, to secure the payment of water service rates and charges. Except for municipal water systems, such deposit shall not be more than one-twelfth (1/12) of the annual estimated charge for residential service or one-sixth (1/6) of the annual estimated charge for all other service. For a municipal water system only, the deposit shall not be more than either fifty dollars ($50) or two-twelfths (2/12) of the average annual usage of the applicant's specific customer class, whichever is greater. For combined water

and sewer municipal systems the deposit shall not be more than either one hundred dollars ($100) or two-twelfths (2/12) of the average annual usage of the applicant's specific customer class, whichever is greater. This provision must be included in the utility's tariff filed with the Commission. The utility shall not be bound to supply water until these conditions are fulfilled and it may terminate water service if the security or increased security is not given when required. The utility shall have a reasonable time, not to exceed thirty (30) days, to read and remove meters and to ascertain that the obligations of the customer have been fully performed before being required to return any deposit in the case where there has not been an automatic refund. This provision must be included in the utility's tariff filed with the Commission.

6.2.1.b. Security deposits for public service districts. -- All new applicants for residential or other water service from a public service district shall make a deposit of (i) a minimum of fifty dollars ($50), or (ii) two-twelfths (2/12) of the average annual usage for the applicant's specific customer class for water service, whichever is greater, with the district to secure the payment of water service rates and charges. For combined water and sewer public service districts such deposit shall not be more than either one hundred dollars ($100) or two-twelfths (2/12) of the average annual usage of water service and wastewater service for the applicant's specific customer class, whichever is greater. The district shall not be bound to supply water until this condition is fulfilled. In any case where a deposit is forfeited to pay service rates and charges which were delinquent at the time of disconnection or termination of service, no reconnection or reinstatement of service may be made by the district until another deposit as described above has been remitted to the district. This provision must be included in the utility's tariff filed with the Commission.

6.2.1.c. Return of deposit to customers. -- Except as otherwise provided in Water Rule 6.2.1.d., after a customer has paid bills for service for twelve (12) consecutive months without a delinquency the utility shall promptly and automatically refund the deposit plus accrued interest. Calculation of the above twelve (12) month period shall commence from the first regular payment or following the payment of a delinquent bill or bills. For a customer whose deposit remains with the utility at the time of the requested termination, any deposit plus interest held by the utility shall be credited against the final bill with the utility paying any remainder to the customer at the time of the final bill.

6.2.1.d. Return of deposit by public service districts and municipal systems only for a customer who is a tenant. -- By statute districts and municipal water systems are not required to return a deposit to a customer who is a tenant until the time the tenant discontinues service with the district or municipal system. After a customer who is a tenant discontinues service with the district or municipal system, the utility shall promptly and automatically refund the deposit plus accrued interest. The public service district or municipal system shall have a reasonable time, not to exceed thirty (30) days, to read and remove meters and to ascertain that the obligations of the customer have been fully performed before being required to return any deposit in the case where there has not been an automatic refund.

6.2.1.e. Interest paid on deposits will be established by the Commission by general order.

6.2.1.f. A current customer of a public service district or a municipal system who requests service at another location within the jurisdiction of the district and who has made payment of bills for the previous twelve (12) months without a delinquency is not required to pay a deposit for service at the new location because that customer is not a new applicant for service under W. Va. Code §§16-13A-9, 8-20-10 or 16-13-16. The preceding sentence shall not apply to multiple service locations. Multiple service locations shall require multiple deposits. In the event the customer of record has died or has become incapable of being responsible for water service, that individual's spouse may become the customer of record without being required to complete a new application for water service, or paying a new deposit.

6.2.1.g. Record of deposit. -- Each utility holding a cash deposit shall keep a record showing: (i) the name and current address of each depositor; (ii) the amount and date of the deposit; (iii) each transaction concerning the deposit.

6.2.1.h. The receipt. -- Concurrently with receiving a cash deposit, the utility shall deliver to the applicant for service or the customer, a receipt showing: (i) the date thereof, (ii) the name of the applicant or customer and the address of the premises served or to be served, (iii) the service furnished or to be furnished, and (iv) the amount of the deposit and the fact that interest will be paid at a Commission determined rate. Each utility shall provide automatic means to refund the deposit of a customer, when he is so entitled, if the original receipt cannot be produced. A receipt of proof or payment will not be necessary under the provisions for an automatic refund.

6.2.1.i. Unclaimed deposits. -- The utility shall follow the provisions of the Uniform Unclaimed Property Act, codified at W. Va. Code §36-8-1, with regard to the disposition of any unclaimed deposit.

6.2.1.j. All utilities that collect security deposits must do so in a nondiscriminatory manner.

6.2.2. Guaranty agreement.

6.2.2.a. A utility, other than a public service district, may accept, in lieu of the cash deposit, a guaranty agreement signed by a financially responsible guarantor, whereby payment of a specified sum, not exceeding the cash deposit aforesaid, is guaranteed. The guarantor may, upon request, receive copies of disconnection notices sent to the customer whose account has been guaranteed: provided that the limitations herein fixed upon the terms of a guaranty agreement shall not apply to industrial customers.

6.2.2.b. A guaranty agreement shall terminate after the customer has satisfactorily paid bills for twelve (12) consecutive months, or when the customer gives notice to the utility of discontinuance of service at the location covered by the guaranty agreement, or six (6) months after discontinuance of service where no notice was given, or at the guarantor's request upon thirty (30) days' written notice to the utility. Upon termination of a guaranty agreement, or whenever the utility deems the same insufficient as to amount of surety, a cash deposit or a new or additional guaranty may be required upon reasonable written notice to the customer.

6.2.2.c. Application in case of receiver or trustee. -- The aforesaid provisions shall apply in the case of a receiver or trustee operating a business, under court order that requires utility service.

6.3. Billing information.

6.3.1. A utility shall render bills periodically. Each bill must show the readings of the meter at the beginning and end of the period for which the bill is rendered, the date of the meter readings, the number of cubic feet or gallons of water supplied, and the authorized rate. If the utility must, for any reason, render an estimated bill, the bill shall be clearly marked as an estimated bill. All bills shall state "This utility is regulated by the Public Service Commission of West Virginia" and "Rates available upon request."

6.3.2. No adjustment will be required in billing when the deviation from the standard billing period is not more or less than five (5) days in the case of monthly billing, ten (10) days in the case of bi-monthly billing, and fifteen (15) days in the case of quarterly billing. When the deviation exceeds these limits, either for regular or periodic billing or for opening or closing bills, the water blocks and minimum

charges shall be prorated on the basis of the ratio of the number of days in the period in question to the number of days included in the standard billing period, which will be taken at thirty (30) days for monthly billing, sixty (60) days for bi-monthly billing, and ninety (90) days for quarterly billing.

6.3.3. Utilities desiring to adopt mechanical billing of such nature as to render compliance with all the terms of Water Rule 6.3.2. impractical may make application to the Commission for relief from part of these terms. After consideration of the reasons given when asking for relief, the Commission may allow the omission of part of these requirements.

6.3.4. On all bills that include charges for items other than authorized water charges, the utility will clearly state other factors used in computing the bill so that the amount may be readily verified from the information appearing on the bill.

6.3.5. Each bill shall bear ~~upo~~n its face the latest pay date and the date it shall be a delinquent bill if not paid. A utility may request a delayed payment penalty applicable to current usage billings not paid by the latest pay date, equal to ten percent (10%) of the net current amount unpaid. This delayed payment penalty is not interest and is to be collected only once for each bill where it is appropriate. This provision must be included in the utility's tariff filed with the Commission.

6.3.5.a. When a utility receives a customer payment at a time when both a delinquent bill and a current bill are outstanding, the utility will apply the payment first to the current bill, and apply any leftover amounts to the delinquency. Provided, that this rule shall not apply to payments from customers whose delinquencies have been addressed in a deferred payment agreement. If a termination notice has been issued then the payment should first be applied to the delinquent amount that is the subject of the termination notice.

6.4. Adjustment of bills.

6.4.1. Fast meters. -- If, upon test of any meter, the utility finds that a meter has an average error of more than two percent (2%) fast, the utility shall refund to the customer the overcharge, based upon the corrected meter reading for a period equal to one-half (½) the time elapsed since the last previous test, but not to exceed six (6) months. If it can be shown that the error was due to some cause, the date of which can be fixed, the overcharge shall be computed back to but not beyond such date. If the meter has not been tested in accordance with subsection 8~~6~~.4, the period for which it has been in service beyond the regular test period shall be added to the six (6) months in computing the refund.

6.4.2. Dead meters. -- If a utility finds that a meter is not registering, or that remote metering equipment has failed, for any period, the utility shall compute the water used by taking the average of the water used for the meter-reading period preceding and the meter-reading period following the date when the meter was found to be dead, which amount shall be assumed to be the amount of water used by the customer during the billing period in which the meter was found dead. Exceptions will be made to this rule in case the facts clearly show that the above method does not give the correct consumption for the period. A utility may backbill the customer for the difference between the amount previously billed and the customer's estimated usage for a maximum of three (3) months preceding the date the dead meter is repaired or replaced. The utility should fix or replace dead or malfunctioning meters within thirty (30) days of the utility's discovery that a meter is dead or malfunctioning.

6.4.3. Leaks on the customer's side of the meter.

6.4.3.a. Each utility shall implement a written leak adjustment policy consistent with this rule.

Where the bill reflects unusual usage in excess of 200% of the customer's historical usage that can be attributed to leakage on the customer's side of the meter the utility will adjust the bill. The policy shall be maintained in the utility's office for inspection by the public and shall be applied in a non-discriminatory manner to all customers. The policy shall be filed with the Commission as a part of the utility's tariff. The reasonableness of the utility's policy shall be subject to approval by the Commission and the reasonableness of the utility's practice with respect to implementing a policy shall be subject to Commission review in a formal complaint proceeding.

6.4.3.b. The recalculated bill shall reflect the utility's incremental cost of treating or purchasing the water, as contained in the utility's tariff, for all amounts above 200% of the customer's historic usage. Historic usage shall be defined as the average usage of the preceding twelve (12) months, or actual period of service if less than twelve (12) months. If using the historic usage would result in an unreasonable calculation, adjustments may be made. If such adjustments are made, the utility should advise its customer that a dispute regarding such adjustments may be taken to the Commission in the form of an informal complaint.

6.4.3.c. As an alternative to using the incremental cost of treating or purchasing the water, the utility may, at its option, use an adjustment that allows it to recover the Commission's estimate of "typical incremental" cost per thousand gallons of water on usage above the historic usage. The Commission shall from time to time establish its estimate of "typical incremental cost" by order.

6.4.3.d. In rate cases the Commission will determine the utility's incremental cost of treating or purchasing the water and require that the utility include the rate in an appropriate tariff as the leak adjustment rate. After the Commission approves a rate in a rate case, the utility shall not have the option to use the Commission's estimate of "typical incremental cost" found in Water Rule 6.4.3.c.

6.4.3.e. The water utility shall, after determining that a leak adjustment must be made, notify the sewer utility of the amount of the adjustment in gallons and the reason for making the adjustment.

6.5. Complaints.

6.5.1. Investigation of complaints. -- Each utility shall make a full and prompt investigation of all complaints made to it by its customers, either directly or through the Commission. In the event that the complaint is not adjusted, the utility shall notify the customer that he may file an informal or formal complaint with the Commission.

6.5.2. Records of complaints. -- The utility shall keep a record of all complaints received, which record shall show the name and address of the complainant, the date and character of the complaint, and the adjustment or disposal made thereof.

6.5.3. Disposition of records. -- Records of complaints shall not be destroyed until a summary has been prepared for permanent record, showing the character of complaints made, the number of each type received in each month, and the disposition of the complaints.

6.6. Disputed bills.

6.6.1. In the event of a dispute between the customer and the utility respecting any bill, the utility shall conduct an investigation and report the result thereof to the customer. In the event that the complaint is not resolved, the utility shall, before service is discontinued, notify the customer of the customer's right to file an informal or formal complaint with the Commission.

6.7. Customer discontinuance of service.

6.7.1. Any customer requesting service to be discontinued shall give notice thereof to the utility, during regular business hours. Unless a different period shall be mutually agreed upon by written contract, the utility will discontinue service by the end of the next business day. Until the utility receives notice, the customer may be held responsible for all service rendered.

6.8. Utility discontinuance of service.

6.8.1. Notice of discontinuance.

6.8.1.a. The utility may not discontinue service sooner than ten (10) days following the date that a utility has mailed to a customer written notice of scheduled termination of service, in compliance with Water Form No. 1 attached to these rules. Where written notice is required the utility must send the notice by first class mail, address service requested. The written notice shall become void if the utility has not discontinued service within thirty (30) days of the date indicated on the notice.

6.8.1.b. Where (1) conditions hazardous to life or property are found to exist on the customer's premises, (2) the utility's regulating, measuring or distribution equipment or facilities have been tampered with, or (3) the customer's premises have been condemned through a condemnation proceeding under the laws of this state, the water may be shut off without notice in advance.

6.8.1.c. Prior to disconnecting water service for non-payment of a water, a stormwater, or a sewer bill, a utility is required to make at least two (2) attempts to notify the customer through personal contact unless it can be reasonably established that the premises are not permanently inhabited. For the purposes of this rule, personal contact includes both face-to-face meetings and telephone calls.

6.8.1.c.1. When the water service is being terminated for non-payment of a water bill, the two (2) attempts to notify by personal contact shall be made on two (2) separate business days at least twenty-four (24) hours prior to the scheduled termination unless it is reasonably established that the premises are not permanently inhabited. The inability to make personal contact shall not prevent the water utility from terminating service.

6.8.1.c.2. When water service is being terminated for non-payment of a sewer or stormwater bill, the sewer utility, the municipality or public service district owning the stormwater system, or the water utility is required to make two (2) attempts to notify by personal contact on two (2) separate business days at least twenty-four (24) hours prior to the scheduled termination unless it can be reasonably established that the premises are not permanently inhabited. The inability to make personal contact shall not prevent the water utility from terminating service.

6.8.1.d. Service shall not be discontinued on a Saturday, Sunday, any day that is a federal or state holiday, a day on which the utility's business office is not open to accept payment, or on the day before such days, unless an emergency exists.

6.8.1.e. All disconnections shall be performed between the hours of 8 a.m. and 4 p.m.

6.8.1.f. The utility may, but is not required to, accept payment at the customer's premises in lieu of discontinuing service for either a delinquent water or sewer bill.

6.8.1.g. If a customer has received notice of a scheduled termination, and, to avoid such termination, makes payment by check which is subsequently dishonored by the bank, the utility may then terminate service only after it has mailed notice, by first class mail, to the customer at least five (5) days, excluding Saturdays, Sundays, and state or federal holidays, prior to termination; provided that at the option of the utility, in lieu of mailing the notice, the utility may contact the customer either in person or by telephone. For purposes of this rule, if the utility elects to contact the customer either in person or by telephone, an attempt to contact shall not be considered sufficient -- actual contact must be made.

6.8.1.h. If a landlord of a single-unit dwelling or a master-metered mobile home park, apartment building, motel, hotel or other multiple or single-unit dwelling is responsible for payment of a utility bill, written notice of termination in the form of Water Form No. 2 shall be placed at a location readily available for public inspection on the premises at least five (5) days, excluding Saturdays, Sundays, and state or federal holidays, prior to the scheduled termination of service to that mobile home park, apartment building, motel, hotel or other multiple or single-unit dwelling. If the billing address for any single unit service is different than the service location, a written notice in the form of Water Form No. 2 shall be delivered or posted at a visible location on the premises where the service is to be terminated at least five (5) days, excluding Saturdays, Sundays, and state or federal holidays, prior to the scheduled termination. This notice shall inform the occupant(s) of the date on or after which termination of service will occur and shall state the steps the occupant(s) can take to avoid termination of service.

6.8.1.i. Deferred Payment Agreement. A water customer who has been notified that water service is to be terminated for non-payment of water bills shall be given the opportunity to enter into a deferred payment agreement: Provided, that the customer has demonstrated an ability to pay but only in installments. The customer shall be informed at the time a disconnect notice is issued of the availability of a reasonable payment plan.

6.8.1.i.1. The details of the deferred payment agreement are to be negotiated between the utility and the customer and may consider several factors, including, but not limited to the following: amount of the delinquency; ability of the customer to pay; payment history; time the delinquency has been outstanding; reasons why the delinquency has been outstanding; and any other relevant factors.

6.8.1.i.2. A standard deferred payment agreement will include a pay-off amount consisting of the delinquency balance in twelve monthly payments. If a residential customer desires a payment period that is shorter than twelve (12) months, the utility shall accept the shorter term. The deferred payment agreement shall include language informing the customer of the right to challenge the reasonableness of the proposed payments to the Commission.

6.8.1.i.3. During the challenge, the utility may not terminate service: provided that the current bill must be paid by the customer on time and in full in order to protect the customer's rights under this rule.

6.8.1.i.4. Once a deferred payment agreement has been established, the customer must pay the current bill on time and in full and make timely payments in accordance with the deferred payment agreement.

6.8.1.i.5. If the customer's financial condition significantly changes and the existing payment agreement results in hardship, the utility shall renegotiate the payment agreement, consistent with the provisions of Water Rule 6.8.1.i.1. The customer shall provide documentation in support of his claim that his financial condition has changed. During the renegotiation period the customer must continue to pay the current bill on time and in full and make some payment on the delinquency.

6.8.1.i.6. If the deferred payment is not received in accordance with the terms of the agreement or the payment is made with a check subsequently dishonored by the bank, the utility may terminate service only after it has mailed written notice, by first class mail, to the customer at least five (5) days, excluding Saturdays, Sundays, and state or federal holidays, prior to termination: provided that at the option of the utility, either personal contact or telephone contact with the customer may be substituted for contact by first class mail. If the customer makes the delinquent payment within that notice period, service shall not be terminated. However, if the customer has, during the previous twelve (12) months, attempted to make payment by a check which was subsequently dishonored by the bank the utility may refuse the customer's check and immediately terminate service without additional notice.

6.8.1.j. In the case of a sewer utility requesting termination of water service for non-payment of sewer service, the sewer utility shall provide the customer written notice complying with Sewer Form No. 1, ten (10) days before the effective termination that the sewer utility will request termination of water service by the water utility if payment is not made in full or a payment schedule is not established as provided by Sewer Rule 6.8.2.i. The written notice must be sent first class mail, address service requested. This notice shall contain a provision notifying the customer that in the event water is terminated the customer will be responsible for and required to pay the fees charged to the sewer utility by the water utility.

6.8.1.k. A sewer utility requesting termination of water service for non-payment of sewer bills shall provide the water utility with a copy of the notice to the customer required by Sewer Rule 6.8.1.a.

6.8.1.l. A sewer utility will provide the water utility with a written request for termination of water service for non-payment at least twenty-four (24) hours before the end of the ten (10) day notice period to the customer.

6.8.1.m. If a utility proposes termination rules that differ from the Commission rules, those termination rules must be filed with the Commission as a request to modify the utility's tariff.

6.8.2. Once a disconnected customer has paid his delinquency in full, or the utility has agreed to enter into a deferred payment agreement with the customer, and all disconnect and/or reconnect fees have been paid, the utility shall reconnect the customer's water service as soon as possible but no later than twenty-four (24) hours from the time the customer pays all disconnect and reconnect fees.

6.8.3. Charge for reconnection.

6.8.3.a. Whenever the supply of water is turned off for violation of rules, non-payment of bills, or fraudulent use of water, the utility may make a charge as set forth in its tariff for reestablishment of service.

6.8.3.b. If service is discontinued at the request of the customer, the utility may refuse service to such customer, at the same premises, if requested within eight (8) months of the date service was discontinued, unless the customer shall first pay the reconnection charge set forth in the utility's tariff.

6.8.4. The utility shall not refuse, deny, or discontinue service to an applicant or present customer due to a delinquency in payment for service by a previous occupant of the premises to be served unless such applicant or present customer and such previous occupant are members of the same household and were members of the same household at the time the delinquent bill was incurred.

6.8.5. Combined water and sewer public service districts. -- Any public service district providing water and sewer service to its customers shall have the right to terminate water service for delinquency in payment of either water or sewer bills; provided that proper notice is given and procedures followed as set out in these Rules.

6.8.6. Inter-utility Agreements regarding discontinuance of water service for non-payment of sewer bills.

6.8.6.a. In the event that any utility, (whether public, private, city, incorporated town, municipal corporation or public service district) owns and operates either water facilities or sewer facilities, and a separate utility owns and operates the other kind of facilities, either water or sewer, then the two utilities shall covenant and contract with each other to shut off and discontinue the supplying of water service for the non-payment of sewer service fees and charges; provided that proper notice is given and procedures are followed as set forth in Water Rules 6.8.1.a. through 6.8.1.m.

6.8.6.b. Municipal sewer. -- When sewer facilities are municipally owned and water facilities are not, the municipality providing sewer service may require the water utility to discontinue water service to any customer who is delinquent in the payment of sewer service rates and charges to the municipality. The water utility shall discontinue water service upon demand of the municipality for this purpose; however, prior to discontinuance of any water service, the municipality shall contract with the water utility which contract shall provide that the municipality shall reimburse the water utility for all costs and expenses incurred in both the termination of water service to the delinquent sewer customer and the subsequent resumption of water service to such customer. The contract shall provide for reasonable methods and assurances so that the water utility will be protected and held harmless from claims and damages when water service is discontinued in error or in violation of the rights of the customer through the fault of the municipal sewer utility.

6.8.6.c. The inter-utility agreement should contain specific provisions regarding responsibilities of notice of termination, termination, reconnection, and reasonable fees based on fair and reasonable compensation.

6.8.6.d. Any inter-utility agreements pursuant to Water Rule 6.8.6.b. shall be submitted to the Commission for approval prior to any termination of water service for non-payment of sewer bills under such agreements.

6.8.6.e. A water utility that has terminated or reconnected service for non-payment of sewer bills or that has made a visit to the customer's premises to terminate service, may charge the sewer utility a fee pursuant to Water Rule 6.8.3. The sewer utility may include this charge in the billing to the delinquent customer; provided that such charge is included in the sewer utility's approved tariff.

6.8.7. A sewer customer who has been notified that water service is to be terminated for non-payment of sewer bills shall be given the opportunity to enter into a deferred payment on the same terms and conditions set forth in Water Rule 6.8.1.j.

6.9. Refusal to serve applicant. -- The utility should design its application form to reflect the following:

6.9.1. Non-compliance with rules. -- Any utility may decline to serve an applicant until he has complied with these rules and the Commission approved utility's rules set forth in a Commission approved tariff governing water service.

6.9.2. Applicant's facilities inadequate. -- The utility may refuse to serve an applicant if, in its judgment, the applicant's installation of piping equipment is regarded as hazardous or of such character that satisfactory service cannot be provided.

6.9.3. A bill which has been found to be contractually uncollectible by a court or could reasonably be found to be uncollectible by reason of an applicable statute of limitations shall not be used by a utility to deny or discontinue service.

6.9.4. Applicant's recourse. -- In the event that the utility refuses to serve an applicant under the provisions of this rule, the utility must inform the applicant that the applicant may file a complaint with the Commission for decision.

6.9.5. In the case of the establishment of a new utility and/or extensions planned by an existing utility, where the utility has received applications for service and has accepted the tap-fee for same from the applicants, the utility will immediately upon receiving bids for such installation determine the feasibility of serving the areas in question and immediately advise the applicants. In the event an area is deemed infeasible to serve, the tap-fee deposit will be returned to the applicant immediately.

6.10. Change in character of service. -- When a utility makes a substantial change in water pressure, or other conditions affecting the efficiency of operation or adjustment of appliances, the utility shall inspect and readjust the appliances of all customers in the district affected, if necessary, without charge. Where circumstances require, the utility shall furnish and install suitable pressure regulating devices.

6.11. Access to property.

6.11.1. The utility shall at all reasonable times have access to meters, service connections and other property owned by it on customer's premises, for the purpose of maintenance and operation. Neglect or refusal on the part of customers to provide reasonable access to meters, service connections and other property owned by the utility for the above purposes shall be deemed to be sufficient cause for discontinuance of service.

6.11.2. Identification for employees. -- Every employee, whose duties regularly require work on or near the property of a customer, shall wear a distinguishing uniform or insignia, identifying the person as an employee of the utility and shall carry an identification card which will identify the person as an employee of the utility, containing a photograph of said employee. The identification card shall contain the telephone number of the utility as well as other pertinent information necessary to identify the employee. All other employees, whose duties require occasional entry into the homes or premises of customers, shall carry an identification card containing information as herein required.

6.12. Service interruptions.

6.12.1. Records of interruptions. -- Each utility shall keep a record of all interruptions of service affecting its entire system or major divisions thereof, including a statement of the time, duration, and cause of the interruptions.

6.12.2. Notification to customer for scheduled interruptions. -- A utility will notify every affected customer in advance of contemplated work that will result in an interruption of service.

6.12.3. Curtailment or restriction service policy. -- Prior to putting any curtailment or restriction

policy affecting customers into effect, a utility shall file its contemplated policy with the Commission and supply the following information:

6.12.3.a. Reason for curtailment or restriction of service.

6.12.3.b. Date curtailment or restriction policy requested to begin.

6.12.3.c. Duration of policy and projected correction programs with time parameters for completion.

6.12.4. Notice required for unscheduled interruptions. -- In the event of an unscheduled service interruption, a utility shall notify the Bureau for Public Health and the Commission as soon as possible upon a utility becoming aware of an unscheduled service interruption. Additionally, a utility will make customers and the general public aware of any unscheduled service interruption by utilizing one or more of the following acceptable methods of public notification as appropriate:

6.12.4.a. Fax/e-mail notification to local radio and television stations, cable systems, newspapers and other print and news media in the affected area as soon as possible after the event occurs. The notification must provide relevant information about the event, such as the affected location, its potential impact including possible adverse health effects and the population or subpopulation particularly at risk, and a description of actions affected ratepayers/occupants should take to ensure their safety, with updates as often as needed.

6.12.4.b. Use of the utility's own Internet web site and 24/7 emergency phone line and integrated voice response system to provide relevant information about the event, such as the affected location, its potential impact including possible adverse health effects and the population or subpopulation particularly at risk, and a description of actions affected ratepayers/occupants should take to ensure their safety, with updates as often as needed.

6.12.4.c. Other types of notice at the discretion of the utility, including, but not limited to, doorknob flyers distributed to affected ratepayers/occupants, e-mail, text message, automated dialing system (outbound dialing).

6.12.5. Actual notice must be provided to affected health care and childcare facilities and other facilities, for example, schools and restaurants, as determined by consultation with the Commission, the Bureau for Public Health, the Department of Environmental Protection and other state agencies as necessary.

6.12.6. A utility shall coordinate with state and local emergency management agencies, as needed, to use any emergency alert system available for qualifying situations.

6.12.7. Public Notice Templates. -- Utilities should have public notice templates prepared and available in advance to avoid wasting critical time developing materials when confronted with an unscheduled service interruption. The notices should cover all possible scenarios from water conservation to boil water alerts to contaminants of concern and associated health effects.

6.12.8. Utility Contact Person. -- To ensure that the public is informed in the case of an unscheduled interruption occurring due to an emergency situation, utilities should have a knowledgeable contact person stationed onsite during the emergency, if possible, to communicate to the public and media on behalf of the company.

6.12.9. In the case of an unscheduled interruption occurring due to an emergency situation, water utilities should make a reasonable effort to ensure that adequate quantities of alternative supplies of water essential for domestic use are made available in a sufficient number of conspicuous and predetermined locations relative to the number of customers affected by the incident. This includes the use of water tankers or free bottled water, or both. Utilities should ensure that customers are adequately notified of the times available and locations of alternative water supplies. When bottled water is used, utilities should have plans in place, based on prior coordination with local vendors, to have adequate supplies to last for the duration of the outage. The Commission encourages utilities to work proactively with community-based organizations that would have readily available information on the location and special needs of affected elderly or homebound customers in the area.

6.13. Moratoria.

6.13.1. Conditions. -- The Commission may impose a moratorium on a system, either entire or apportioned, whenever sufficient evidence exists that the existing facilities are operating in excess of design capacity, that the system capacity necessary for future demand does not exist, or when an increase in customers will result in the degradation of service to existing customers.

6.13.2. Petition. -- A utility, Commission Staff, or governmental entity may petition the Commission in writing for the imposition of a moratorium on a system. The petition should include evidence of the existence of conditions outlined in Water Rule 6.13.1. If the utility is the petitioner, it must state the utility's plan to remediate those conditions.

6.13.3. Imposition by state agency other than the Commission. -- A utility must immediately notify the Commission in writing if a State agency other than the Commission imposes a moratorium on the utility's system.

6.13.4. Public notification of petition. -- A party petitioning for a moratorium shall notify the public that such request is being made, through a Class II legal advertisement in the form of Water Form No. 3, "Public Notice of Filing of a Petition for Imposition of a Moratorium" attached to these Rules, published no later than fifteen (15) calendar days from the date such request is made to the Commission. The notification shall clearly state which areas of the utility's system are affected, and that interested parties may submit comments to the Commission for consideration.

6.13.5. Exemptions. -- Any prospective customer or group of prospective customers may apply to the Commission for an exemption from an existing moratorium. The prospective customer(s) shall make the requests in writing to the Commission, and include justification for the proposed exemption.

6.13.6. Refusal of Service. -- A utility may not deny service to a prospective customer on grounds of a moratorium until the Commission has imposed a moratorium. Any utility denying service to a prospective customer or group of customers due to a moratorium shall notify, in writing, all applicants for service of their right to file with the Commission a request for exemption from the moratorium.

6.13.7. Improvements to System. -- A utility upon which a moratorium is imposed shall continue to seek improvements to its system necessary to lift the moratorium. The Commission may, at its discretion, require the utility to submit reports outlining all progress made toward system improvements.

6.14. Local water rationing plans.

6.14.1. Authority. -- Upon giving notice to the Commission and the general public, any water utility declaring a temporary shortage of water, and that it is necessary for the health and welfare of the utility's customers to restrict the consumption and use of the existing water supply, shall be authorized to enforce the following Local Water Rationing Plan ("Plan") to restrict use of water to human consumption and for sanitary purposes. If a utility wishes to adopt a Plan different from the following Plan, it may petition the Commission for permission to do so.

6.14.2. Definitions.

6.14.2.a. "Emergency service area" -- the area or areas within which the utility has declared a state of drought and water shortage emergency.

6.14.2.b. "Excess use" -- the usage of water by a water customer in excess of the water allotment provided under the Local Water Rationing Plan for that customer, over any applicable period.

6.14.2.c. "Service area" -- the territory and the customers serviced by the utility.

6.14.2.d. "Service interruption" -- the temporary suspension of water supply, or reduction of pressures below that required for adequate supply, to any customer, portion of a water supply system or an entire system.

6.14.3. Purpose. -- This Plan is intended to establish measures for essential conservation of water resources, and to provide for equitable distribution of limited water supplies, to balance demand and available supplies and to assure that sufficient water is available to preserve public health and safety within an emergency service area.

6.14.4. Scope. -- This Plan shall apply to all water uses within a utility's emergency service area including uses by customers of wholesale customers of the utility.

6.14.5. Objective of the Plan.

6.14.5.a. It is imperative that water customers within an emergency service area reduce water use in order to extend existing water supplies, and to assure that sufficient water is available to preserve the public health and sanitation, and provide fire protection service and electric power generation.

6.14.5.b. This Plan requires equitable reductions in water usage, and for equal sacrifice on the part of each water customer, insofar as such restrictions do not interfere with the public health, adequate fire protection and the generation of electric power. The success of this Plan depends on the cooperation of all water customers in the emergency service area.

6.14.6. Measures to implement the water rationing plan. -- Each water supply purveyor, including resellers, within the emergency service area, will develop and adopt necessary and appropriate measures to assure compliance with requirements of this Plan.

6.14.7. Prohibiting non-essential water uses. -- The following water uses are non-essential and are prohibited within an emergency service area:

6.14.7.a. Watering of outside shrubbery, trees, lawns, grass, plants or any other vegetation, except from a watering can or other container not exceeding three (3) gallon capacity. This limitation shall not apply to vegetable gardens, greenhouse or nursery stocks and newly established lawns or sod less than

five (5) weeks old, which may be watered in the minimum amount required to preserve plant life before 8:00 a.m. or after 6:00 p.m.

6.14.7.b. The watering of golf course fairways.

6.14.7.c. The washing of automobiles, trucks, trailers or any other type of mobile equipment except in vehicle wash facilities operating with a water recycling system with a prominently displayed sign in public viewing so stating, or from a bucket or other container not exceeding three (3) gallons.

6.14.7.d. The washing of streets, driveways, parking lots, service station aprons, office buildings, exteriors of homes or apartments or other outdoor surfaces.

6.14.7.e. The serving of water in restaurants, clubs or eating places unless specifically requested by the individual.

6.14.7.f. Ornamental water use, including but not limited to fountains, artificial waterfalls and reflecting pools.

6.14.7.g. The use of water for flushing sewers or hydrants by municipalities or any public or private individual or entity except as deemed necessary in the interest of public health or safety by the utility.

6.14.7.h. The use of fire hydrants by fire companies for testing fire apparatus and for fire department drills except as deemed necessary in the interest of public safety and specifically approved by the municipal governing body.

6.14.7.i. The use of fire hydrants by municipal road departments, contractors and all others, except as necessary for fire fighting or protection purposes.

6.14.7.j. The filling of swimming or watering pools requiring more than five (5) gallons of water, or the refilling of swimming or wading pools which were drained after the effective date of the order, except that pools may be filled to a level of two (2) feet below normal, or as necessary to protect the structure from hydrostatic damage, as to pools constructed or contracted for on or after the date of the final order.

6.14.8. Recourse. -- Any person aggrieved by a utility's decision relating to these rules may file a complaint with the Commission.

6.14.9. Penalties. -- Any person who violates the provisions of this Plan, who fails to carry out duties and responsibilities imposed by this Plan or who impedes or interferes with any action undertaken or ordered pursuant to this Plan, shall be subject to the following penalties:

6.14.9.a. For the first excess use, the utility shall issue a warning of possible discontinuation of service.

6.14.9.b. For the second or subsequent excess use, the utility may interrupt or shut off service to the customer without notice, or the utility may add a surcharge of ten percent (10%) to the end user's monthly bill for the month of the infraction.

6.14.10. Effective period. -- This Plan shall remain in effect until terminated by action of the

utility declaring an end to the emergency condition or until terminated by order of the Commission, whichever comes first.

6.14.11. Effective date. -- This Plan shall take effect immediately upon adoption by the utility.

6.15. Resale of water.

6.15.1. A utility customer may not resell or cause to be resold water furnished by a public utility on approved rates or contracts unless the customer is engaged in the business of distributing water as a public utility.

§150-7-7. Utility Facilities; Service Pipes; Extension of System.

7.1. Adequacy of facilities.

7.1.1. Construction and maintenance of plant. -- A utility shall at all times construct and maintain its entire plant and system in such condition that it will furnish safe, adequate and continuous service.

7.1.2. Inspection of plant. -- A utility shall inspect its plant and facilities in such manner and with such frequency as is necessary to ensure a reasonably complete knowledge as to their conditions and adequacy at all times. Such inspections must comply with the requirements of the legally applicable Minimum Federal Safety Standards (Federal Occupational Health and Safety Administration) and the standards of the Bureau for Public Health and the Department of Environmental Protection (as applicable).

7.1.3. Records of conditions. -- Records necessary for the proper maintenance of the system and in accordance with the Bureau for Public Health and the Department of Environmental Protection (as applicable), and the Minimum Federal Safety Standards shall be kept of the conditions found. In special cases, a more complete record may be specified by the Commission.

7.1.4. Records of operation. -- A utility shall keep a record of the operation of its plant, which, so far as practical, shall show sufficient details of plant operation as is necessary to substantially reproduce the daily history of its operation. The utility shall also maintain the records in accordance with the requirements of the Minimum Federal Safety Standards and Bureau for Public Health and Department of Environmental Protection (as applicable).

7.1.5. Reports to Commission. -- A utility shall, upon request of the Commission, file with the Commission a statement regarding the condition and adequacy of its plant, equipment, and facilities, and of its operations and service in such form as the Commission may require.

7.1.6. Bureau for Public Health Standards. -- All extensions, service connections and modifications to a utility's plant must meet applicable design standards established by the West Virginia State Bureau for Public Health in addition to these rules.

7.1.7. Dead ends. -- A utility should avoid "dead ends" in the utility's distribution mains so far as possible. If "dead ends" exist the utility shall provide facilities for flushing.

7.2. Utility Service Pipe.

7.2.1. Where the service pipe is required for the immediate and continuous use for general service to premises abutting the public street or right-of-way in which mains are located, the utility will furnish,

install, and maintain the utility service pipe and appurtenances between the main in the street up to the customer's point of service at or near 90 degrees to the main. Provided, all utility service pipes and appurtenances shall be installed only by the utility unless by prior written agreement.

7.2.2. The utility shall determine the location of the utility service pipe.

7.2.3. The utility will specify the size, kind, quality and location of all materials used in the utility service pipe.

7.2.4. The utility shall install and maintain, at its own cost and expense, all of the utility service pipe regardless of the side of the road on which the customer is located in reference to the main line. The utility shall designate the point of service on the customer's side of the road.

7.2.5. The utility shall not make any charge for furnishing and installing any permanent service connection, meter or other appliance necessary to deliver and measure the water furnished unless the utility has prior approval of the Commission to charge a tap fee and the same is set forth in the utility's tariff on file with the Commission.

7.2.6. The utility's service pipe shall remain under the utility's sole control and jurisdiction.

7.2.7. The customer shall not attach any fixtures to, or make any branches in, the utility service pipe between the point of service and the distribution main. Violation of this rule may result in termination of service pursuant to these rules.

7.2.8. A utility shall install_temporary service connections for construction or other temporary purposes or connections for private fire service at the cost of the applicant.

7.2.9. A water utility shall adopt standard methods of meter installations where practicable and file a written description and drawings to provide a clear understanding of the requirements.

7.3. Customer Service Pipe.

7.3.1. No customer, plumber, company owner or any agent shall connect to the utility's main or to any utility service pipe, or extend the pipes therefrom to any premises for the purpose of securing water service, until application has been made therefore to the utility as provided in these rules and the utility has granted permission in writing.

7.3.2. Once a utility grants_an application for service, the customer shall install and maintain the customer service pipe.

7.3.3. The utility's authorized employee shall inform the customer of the location of the point of service. The customer shall install the customer service pipe to the point of service after which the utility will install the utility service pipe from the distribution main to the point of service.

7.3.4. The customer shall also install and properly maintain in good working condition a stop and waste cock of a type approved by the utility on the customer's service pipe immediately inside the foundation wall in a readily accessible location and in a place protected from the possibility of freezing and so placed that it will shut off and drain all plumbing within any and all buildings in the premises.

7.3.5. Where the utility's service pipe is already installed to the point of service, the customer

shall connect with the utility service pipe as installed.

7.3.6. The customer's service pipe shall be installed in a workmanlike manner, shall conform to all reasonable rules and regulations of the utility, and shall be maintained by the customer at his own expense.

7.3.7. The utility will specify the size, kind, quality and location of all materials used in the customer's service pipe and the customer shall comply with those specifications.

7.3.8. A customer must maintain his service pipe in good condition and free from all leaks and defects, at the customer's cost and expense. A customer's failure to comply with this rule may result in termination of service pursuant to these Rules.

7.3.9. The customer's service pipe shall: be laid below the frost line at all points; be placed on firm and continuous earth so as to give unyielding and permanent support; and be installed in a trench at least two (2) feet in a horizontal direction from any other trench wherein gas pipe, sewer pipe, or other facilities, public or private, are or are to be installed.

7.3.10. Except in the case of long-service lines, a customer's service pipe shall not pass through or across any premises or property other than that to be served. If a property served as of September 14, 2021 is later subdivided resulting in the original customer's service pipe crossing the subdivided property that will be occupied by a new customer, the original customer and new customer must have separate service pipes. The original customer must obtain a right-of-way for the original customer's service pipe on subdivided sections of property before title of such section passes to a new owner.

7.3.11. The customer's service pipe and all connections and fixtures attached thereto shall be subject to the inspection of the utility before the water will be turned on, and all premises receiving a supply of water and all service pipes, meters and fixtures, including any and all fixtures within the said premises, shall at all reasonable hours be subject to inspection by any duly authorized employees of the utility.

7.3.12. The utility shall make changes and bear the full costs of changes in the customer's service pipe or meter location required due to changes in grade, relocation of mains, and other causes not related to the customer. The customer shall bear the full costs of changes in service pipe or meter location desired by the customer for the customer's convenience.

7.3.13. The customer shall not attach any fixtures to, or make any branches in, the customer service pipe between the point of service and the premises served. Violation of this rule may result in termination of service pursuant to Water Rule 6.8.

7.3.14. There shall be no more than one (1) customer service pipe required to serve a single premises and each premises shall be supplied through an independent customer service pipe, unless otherwise approved by the utility in writing.

7.4. Long service lines.

7.4.1. To assure the orderly development of its system, and to provide adequate service to its customers, the utility should ordinarily provide water service only at the property line of the customer requesting service, and in those instances where the utility's service does not extend to the customer's property line, the utility should construct an extension in accordance with Water Rule 7.5. In unusual and

exceptional cases where the property line of the customer requesting service is an excessive distance from the existing main of the utility, and the cost to be borne by the prospective customer under Water Rule 7.5. is prohibitive, and there is no reasonable prospect of further growth and development in the area, or for any one of the above reasons, the utility may serve the customer by installing a meter in the utility's right-of-way at its main nearest the customer's property, and connecting the meter to the customer's privately owned service line. The customer shall extend his customer service line to an existing distribution main of the utility and shall be solely responsible for service beyond the meter. The utility shall not serve other customers from a long service line.

7.4.2. If a road crossing is necessary to serve the customer, the utility shall install that portion of the line crossing under the road and shall locate the meter on the customer's side of the road; provided that the utility's distribution main lies within or adjacent to the existing road right-of-way. The customer shall be required to provide evidence to the utility that proper easements or rights-of-way have been obtained. Standards of service received by the customer shall be determined at the metering point. The customer shall not permit others to connect to the customer's water lines or receive water service from the customer's privately owned service line. In the event the utility's main is later extended to the customer's property line under Water Rule 7.5., the customer shall discontinue the use of his privately owned service line and shall pay all costs and charges authorized by the rules of the Commission and the rules and tariffs of the utility for water service from such extension, the same as if the customer had not previously laid and received service through a private service line. The provisions of this rule shall apply to all persons now or hereafter receiving water service through a privately owned service line extending from the utility's main to the property to be served.

7.5. Extension of mains to serve new customer(s) and customers currently served under Water Rule 7.4.

7.5.1. A water utility, whether publicly or privately owned, is under a public service obligation to extend its mains, and its plant and facilities to serve new customers within its service area who may apply for service.

7.5.2. The utility shall make extensions in all cases in which the public convenience and necessity require the service, construction problems are not unusual or burdensome, and the extensions appear to be economically feasible.

7.5.3. For any proposed extension of mains, a reasonable relationship should exist between the per customer investment to serve new customers and the per customer net investment to serve existing customers.

7.5.4. A utility shall make every effort to install its distribution main in the public road right-of-way or in a utility right-of-way abutting the public road right-of-way.

7.5.5. Extensions for general water service.

7.5.5.a. The utility will respond to all inquiries regarding new water service, whether oral or written, by explaining all available options for obtaining service under these rules.

7.5.5.b. When extensions are built, the customer pays for the customer service pipe and the utility pays for the utility service pipe.

7.5.5.c. The utility will, upon written request for service in the form of Water Form No. 4, by

a prospective customer or group of prospective customers located in the same neighborhood, or a customer currently served under Water Rule 7.4., determine the necessary size of main required to give service and make an estimate of the cost of providing the requested service, using the form of Water Form No. 5, including pipe, valves, fittings, necessary materials, permits, costs incurred by the utility when the utility externally contracts for the construction of the extension, or internal labor costs, provided such internal or external costs are not recovered in existing rates, and other applicable related costs. When a road crossing(s) is (are) necessary to serve the customer(s) requesting service, the cost estimate shall not include costs attributable to extending the main across the first road (closest to the already existing main), but shall include the costs of installing the main across a second and any subsequent road(s). The utility will provide the written estimate calculated using Water Form No. 5 to the customer in the form of Water Form No. 6, no more than forty-five (45) days from the receipt by the utility of the written request for service. The written estimate shall include an estimated construction start date and an estimated time of construction. If the prospective customer believes that any part of the estimate is unreasonable, the customer is free to pursue an informal request for assistance from the Commission staff or to file a complaint with the Commission. Further, the utility and the customer shall execute a Main Line Extension Agreement. Commission Staff may be consulted to provide assistance and sample forms. The agreement must include as an attachment a copy of this extension rule. The utility shall keep an executed copy of their agreement for at least six (6) years. The length of the extension required shall be that length required to extend from the new proposed service area to the nearest point of connection to the utility system having sufficient excess capacity to provide service at maximum demand.

7.5.5.d. Unless service is to be provided by a long service line pursuant to Water Rule 7.4., whenever the utility is required to extend service from an existing distribution main to property that does not immediately abut the utility's right-of-way or the public road that contains the distribution main, the extension shall be considered a main extension and cost responsibility shall be determined under Water Rule 7.5.5.

7.5.5.e. Where the cost of the extension does not exceed the estimated total net revenue, as calculated below, from hydrants and prospective customers whose service pipes will immediately be connected directly to the extension and from whom the utility has received applications for service upon forms provided by the utility for this purpose, the utility will install, at its own cost and expense, the necessary extension; provided that the patronage or demand will be of such permanency as to warrant the capital expenditure involved.

7.5.5.e.1. Net annual revenue shall be gross annual revenue minus an amount equal to the excess usage leak adjustment rate approved for the utility times the applicant's usage used for purposes of this rule, with this difference further reduced for any revenue based taxes.

7.5.5.e.2. The utility will base revenue on the average usage by customer class at the time of the extension, unless circumstances of the applicant show this would result in significant error. For non-residential units, the utility will base annual revenue on typical consumption for comparable units published by the American Water Works Association.

7.5.5.e.3. Estimated total net revenue for private, for profit, utilities will be initially calculated as six (6) times estimated net annual revenue. Each such utility shall file for a line extension multiplier within twelve (12) months of the effective date of these rules.

7.5.5.e.4. The utility-specific line extension multiplier for private, for-profit, utilities shall be based on one (1) divided by the utility's net fixed charge rate. The net fixed charge rate shall equal a function of the utility's weighted cost of capital, applicable income tax rates, and the Commission

approved depreciation accrual rate.

7.5.5.e.5. Estimated total net revenue for associations, municipal, and public service district utilities will be calculated as five (5) times estimated net annual revenue. If the Commission approved excess leak adjustment for the utility fails to include all of the incremental costs of serving a new customer that should properly be netted out from the total revenues of the utility, the utility may apply to the Commission for a determination of the proper amount to be deducted from gross revenues to arrive at an appropriate determination of net revenue.

7.5.6. Extensions beyond the limit of utility-financed extensions of general water service and public fire service.

7.5.6.a. If the utility-estimated cost of the proposed extension required in order to furnish general water service exceeds the utility's estimate of total net revenue as determined by Water Rule 7.5.5.d., the utility will make the extension if the applicant or the applicant's authorized agent contracts for the extension and deposits in advance with the utility the estimated cost of the extension over and above the limit of the utility-funded portion of the extension. The utility shall not pay nor be liable for any interest on such cash deposits. The utility shall make the extension after receiving the cash deposit. The utility shall, for each bona fide new customer who, within a period of ten (10) years from the making of such extension, directly connects to the extension between its original beginning and the original terminus, refund to the original depositor(s), an amount equal to the estimated total net revenue of the new customer as determined by Water Rule 7.5.5.d., but in no event shall the aggregate refund made to the depositor(s) exceed the original deposit. Provided that associations, public service districts and municipal water utilities may elect to refund the estimated amount over a period of five (5) years making payments no less frequently than every six (6) months.

7.5.7. Alternate depositor-financed extension plan.

7.5.7.a. Qualifying utilities. -- The above requirements notwithstanding, the utility may decline to finance the portion of a requested extension that would be utility-funded if it can demonstrate that it has no prospect of any reasonable internal or external financing through commercial loans, grants, or through an installment arrangement with an entity installing the extension or providing the necessary materials.

7.5.7.a.1. If the utility declines to finance the portion of a requested extension that would be the financial responsibility of the utility, the utility shall file for a waiver of the extension rule within sixty (60) days of the written request.

7.5.7.a.2. Before filing for a waiver, the utility must first ~~make an~~ estimate ~~of~~ the extension costs.

7.5.7.a.3. A request for a waiver by a utility shall be accompanied by supporting documentation justifying its request, including cost estimates, documentation of inability to finance, internally or externally, through commercial loans, grants or an installment arrangement with an entity installing the extension or providing the necessary materials, and the proposed agreement.

7.5.7.a.4. If the Commission finds that the utility has reasonably declined to finance the portion of the requested extension that would otherwise be utility-funded, the Commission shall authorize the use of the alternate depositor-financed extension plan as described below.

7.5.7.b. Description of alternate depositor-financed extension plan. -- Under the alternate depositor-financed extension plan, the utility shall make the extension after:

7.5.7.b.1. receiving a cash deposit equal to the full amount of the extension cost; and

7.5.7.b.2. agreeing to give the depositor(s), who is a customer, a monthly bill credit totaling one hundred percent (100%) of the actual net bill(s) from the date service is initiated and until the total credits given equal the estimated total net revenue as defined in Water Rule 7.5.5.d.; and

7.5.7.b.3. agreeing to refund to the original depositor(s) an amount equal to the estimated total net revenue as defined in Water Rule 7.5.5.e. of each bona fide customer, other than the depositor(s), who, within a period of ten (10) years from the construction of the extension, directly connects to the extension between its original beginning and the original terminus. The refund may be spread out over a five (5) year period with the utility making payments no less frequently than every six (6) months. The refunds shall continue until the total refunds given equal the estimated total net revenue as defined in Water Rule 7.5.5.d.

7.5.7.c. In no event shall the total refund made to the depositor(s) under subdivision 7.5.7. exceed the original deposit of the depositor(s).

7.5.7.d. The utility shall not pay nor be liable for any interest on the cash deposits associated with line extensions.

7.5.8. General Provisions.

7.5.8.a. If the actual cost of the extension is less than the estimated cost, the utility will refund the difference as soon as the actual cost is ascertained, but in no event later than ninety (90) days after completion of construction of the extension. When the actual cost of the extension exceeds the estimated cost, the utility will bill the depositor for the difference between the estimated and the actual cost. The utility will not pay interest on the applicant's payment or on any balance that is refunded.

7.5.8.b. In estimating the cost of an extension, the utility will base the estimate on the diameter of the pipe to be used; provided that the estimated cost to the customer or customers shall not be based on a pipe diameter greater than the diameter of the main from which the extension is to be made, unless actual consumption estimated for the proposed customer or customers requires a larger pipe.

7.5.8.c. Extensions made under this rule shall be and remain the property of the utility.

7.5.8.d. The utility reserves the right to further extend its distribution mains from and beyond the extension made under this rule, and the depositor or the depositor's agent paying for an extension shall not be entitled to any refund for customers attaching to such further extension or branch mains.

7.5.8.e. In determining the length of water line to be installed in an urban area when land is subdivided into lots, the main, or water line (if installed by an entity other than a utility), shall be extended to fully cover the frontage of the property, and if the last lot to be served is a corner lot the terminal point of the extension made hereunder shall be located so that the water line ties in with the intersecting street. If there is no main located in the intersecting street, the terminal point of the extension shall be located at the nearest street line of the intersecting street. In rural areas or open land areas, the extension required will be that length necessary to adequately serve the applicant.

7.5.8.f. Before water lines are laid in any new subdivision, the road surface shall be brought to the established sub-grade as determined by the agency having jurisdiction.

7.5.8.g. This rule shall not be construed as prohibiting the utility from entering into an agreement with a customer that complies with the Commission approved checklist attached hereto as Water Form No. 7, providing an alternate plan for a main extension. Commission Staff may be consulted to provide assistance and sample forms. In providing an alternate plan for main extensions a utility may not discriminate between customers whose service requirements are similar. The agreement shall be filed with and approved by the Commission prior to implementation or execution of the agreement by any of the parties. The agreement shall include the name, address and phone number of the parties to the agreement. The agreement shall also include a provision explaining why the utility is not funding the extension. The agreement must attach a copy of Water Rule 7.5 and a statement signed by the prospective customer that the customer has reviewed and understands the provisions of Water Rule 7.5.7. which entitle a customer to refunds and that the customer knowingly waives such rights, if applicable. Failure to obtain Commission approval will result in the loss of the right to obtain reimbursement from the utility. If an entity other than the utility constructs the extension, upon completion of construction and proper utility inspection of the extension, the utility shall initiate service only after proper transfer of title to all facilities including property, plant and rights-of-way incidental to the furnishing of utility service.

7.5.8.h. Contract for service. -- A utility is not required to make free extensions or refunds as described in this rule unless those to be served by such extension shall guarantee to the utility that they will take water service at the~~ir~~ premises within thirty (30) days after water service is available or as otherwise mutually agreed in a user's agreement.

7.5.8.i. Construction conditions. – A utility will undertake construction of line extensions, as provided in this rule, promptly after all applications are completed, necessary right-of-way agreements or rights of entry are delivered to the utility, and all prospective customers have signed contracts.

7.5.8.j. Right-of-Way.

7.5.8.j.1. If construction of an extension involves the acquisition of a private right-of-way, then the prospective customer shall attempt to secure the right-of-way and deliver it to the utility free of cost before construction of the extension begins.

7.5.8.j.2. If, however, it is not reasonably possible for the prospective customer or customers to secure the right-of-way, and the construction of an extension involves the utility's incurring expense for right-of-way easements, either by purchase or condemnation, the utility will add those costs to the total cost of the extension.

7.5.8.j.3. As a condition to obtaining a main extension, property owner or developer must grant the utility the necessary easements to allow the utility to make future extensions into unserved areas. The property owner or developer will grant ~~of~~ the necessary easements without requiring the utility to pay additional consideration for the additional easements to the property owner or developer. If the property owner or developer is unwilling to grant the additional easements, the utility shall not be required to extend its main to serve the property owner or developer.

7.5.8.k. Upon the proper filing of a Tariff Rule 42A, 42R, 42T, 19A, or 19R rate case or a certificate case filed pursuant to W. Va. Code §24-2-11 by the utility, the utility may seek to include in its tariff a Capacity Improvement Fee, Capacity Assurance Fee or such other fee or charge designed to raise capital to cover the cost of future capacity expansion to be assessed against customers or entities creating

those costs.

7.5.9. Community infrastructure investment agreements with municipal utilities and public service districts.

7.5.9.a. Municipal utilities and public service districts may enter into "community infrastructure investment agreements" in accordance with the provisions of W. Va. Code §22-28-1 et seq.

7.5.9.b. A utility that has entered into "community infrastructure investment agreements" pursuant to W. Va. Code §22-28-1 et seq. shall maintain separate books and records for the project areas involved in the agreements. For purposes of this section, the project areas for which separate books and records are required include plant upgrades and stand alone systems.

7.5.9.c. A utility that has entered into "community infrastructure investment agreements" pursuant to W. Va. Code §22-28-1 et seq. shall file (i) a copy of the certificate of appropriateness, (ii) a copy of the community infrastructure investment agreement, and, if necessary, (iii) a new tariff containing rates applicable to the new service area. The utility shall file the required documents with the Commission no later than thirty (30) days of the date the project is transferred to the utility.

7.5.9.d. If rates for the new customers served by a public service district project are higher than the rates for the public service district's existing customers, the public service district shall, within ninety (90) days of the date the project is transferred to the public service district, make a formal rate application with the Commission in order to justify the higher rates to the new customers. A municipality shall enact an ordinance increasing rates, if necessary, within ninety (90) days of the date the project is transferred to the municipality.

7.6. Water Losses.

7.6.1. Each utility shall determine either by actual measurement or by estimate the amount of "Water Losses" as defined in Water Rule 3.17. in each division of its system and report, separately, to the Commission in its annual report. If the reported Water Losses are in excess of fifteen percent (15%) of the water supply delivered into the transmission and distribution system on an annual basis, the utility will state. A utility may seek assistance from the Commission regarding remediation of water losses in excess of fifteen percent (15%).

7.7. Cross connections and back flow prevention regulations.

7.7.1. See West Virginia Bureau for Public Health legislative rules pertaining to cross-connections and backflow prevention codified at 64CSR15 (effective March 13, 2004).

7.7.2. All utilities that have adopted a standard or uniform cross-connection and backflow program pursuant to §64-15-8.2 of the *West Virginia Code of State Rules* must file the details of such programs with the Commission. Such programs will be approved as filed unless it can be shown that the program violates an existing Commission rule.

7.8. Standard pressure.

7.8.1. The utility shall ensure that every utility customer receives a "standard pressure" within the Commission-established minimum and maximum pressure limits. When possible, a "standard pressure" shall be calculated as the static pressure based on the difference in elevation between the base of the

storage tank and meter box or point of service. Where this method of calculating a customer's "standard pressure" is not practical, the utility will use the actual engineering design of the system or common engineering methods to determine the "standard pressure" at the point of service. A utility shall not allow pressure to fluctuate more than fifty percent (50%) above ~~n~~or fifty percent (50%) below such "standard pressure" during normal operating conditions. Pressure variations outside the limits specified are not a violation of this rule if they are infrequent and arise from unusual or extraordinary conditions, or arise from the operation of the customer's equipment. This rule shall be interpreted to permit a different "standard pressure" calculation for each customer due to varying elevations.

7.8.2. A utility should establish an elevation in each pressure district above which it cannot provide the minimum pressure required by this rule. A utility shall post notice of that elevation in a prominent place in the public offices of the utility. A utility may furnish new service to customers above this elevation if the customer is fully advised of the conditions under which average service may be expected, and the customer's agreement is secured in writing. The utility may require in the agreement that its terms shall be binding on future customers served at the same location under similar circumstances; provided that the agreement be recorded with the appropriate county clerk. This waiver shall not prevent the Commission from requiring a better service when, upon investigation, it appears that improvements should be made.

7.8.3. A utility shall not make changes to the standard pressure or pressures adopted for its customers without the approval of the Commission.

7.8.4. A customer's pressure shall be no less than twenty (20) p.s.i. at peak demand on system or thirty (30) p.s.i. static pressure at the terminus of the utility's service line (meter box or curb box) unless the customer has waived this requirement. For all new customers desiring service on and after October 24, 2003, a customer's pressure shall be no greater than one hundred thirty-five (135) p.s.i. unless the customer has waived this requirement. The utility shall keep on file all the aforesaid waivers, in accordance with Water Rule 4.1.

7.9. Quality of water.

7.9.1. Purity. -- All water furnished by a utility for domestic use, shall be pure, wholesome, potable and in no way dangerous to the health of the consumer.

7.9.2. Health Department. -- Every water utility shall comply with the rules of the Bureau for Public Health governing purity of water, testing of water, operation of filter plants and such other rules they may prescribe, pursuant to law, having as their ultimate end the purity of water.

§150-7-8. Inspections and Tests.

8.1. Meter testing facilities and equipment.

8.1.1. Testing facilities. -- A utility shall provide or have access to ~~such~~ laboratory meter-testing facilities that are necessary to perform the tests required by these rules or by orders of the Commission. The testing facilities are subject to the approval of the Commission, and shall be available at all times for inspection or use by any member or authorized representative of the Commission.

8.1.2. Tests required; Reports to Commission. -- A utility shall, as a minimum requirement, conduct the tests required by these rules with such frequency, and in such manner, and at such places as provided herein or as may be approved or ordered by the Commission. A utility shall make yearly reports,

in accordance with the requirements of the Commission, in the annual report, of meter tests, number of customers and amount of refunds. These reports must be filed not later than thirty (30) days after the expiration of the period covered by the reports.

8.1.3. General testing equipment. -- A utility furnishing metered water service shall own and maintain the equipment necessary to accurately test all types and sizes of meters employed for the measurement of water unless the utility has made arrangements to have the testing done in a shop or laboratory containing equipment acceptable to the Commission. The utility shall promptly report in writing to the Commission all alterations or repairs to meter testing equipment that might affect the accuracy or method of operation of such equipment.

8.1.3.a. The utility shall hold for all testing instruments and other equipment, a certificate signed by a proper authority giving the date when the instrument was last certified and adjusted, and certificates, when superseded, shall be kept on file in the office of the utility.

8.1.3.b. Shop testing equipment. -- Testing equipment shall consist of calibrated tanks large enough to hold the equivalent volume needed to move the test dial one or more complete revolutions. It is recommended that the calibrated tanks hold not less than the quantity needed to test meters in accordance with the test requirements of the American Water Works Association (AWWA) found in the Water Meters Section of Manual M6, Denver (1986). The equipment shall have the proper valves, gauges, and flow devices to determine the flow rate in gallons per minute and to check the pressure on the intake side of the meter.

8.1.3.c. Field testing equipment "Prover Meter". -- Testing equipment shall consist of a calibrated meter(s) with proper discharge valves and gauges to adjust the flow on the outlet side of the prover meter. The utility shall test and calibrate the field testing equipment against a certified calibrated tank not less than once each year, or more frequently if circumstances warrant, and ensure that a record of testing accompanies the field test equipment when in use. It is recommended that the test record be plotted as an accuracy curve in graph form so that operating error may be determined easily. The error of the prover meter as a correction factor when computing final accuracy of meters tested in place by using the following formula:

$$\text{TESTED METER ACCURACY} = \frac{MV}{PV} \times PA$$

where: MV= volume recorded on meter tested
PV = volume recorded on prover meter
PA = accuracy of prover meter at tested flow rate (in %).

8.2. Tagging, sealing and capping meters.

8.2.1. Tagging meters. -- A utility shall maintain a record of each meter showing the type, brand, serial number, registration reading, test date, flow rates, and test results. A utility shall maintain this record, which may be kept on paper or electronically, after installation of the meter and for so long as the meter remains in service.

8.2.2. Sealing meters. -- The meter tester performing a test shall seal all meters in which the accuracy can be adjusted or which could otherwise be easily altered or tampered with at the time of the test. Pulse generator remote type meters shall have the remote counter sealed.

8.2.3. Capping meters. -- A utility will place caps on the inlet and outlet ports of all meters removed from service and awaiting testing. A utility will cap and seal all meters that have been tested and sealed or are ready for installation until installed.

8.3. Accuracy requirements for water meters.

8.3.1. Installation accuracy. -- Before a utility installs a water meter for the use of any customer, whether new, repaired, or removed from service for any cause, the utility shall ensure that the meter is in good order and is adjusted or repaired to be as nearly correct as is commercially practical. However, a manufacturer's certified test may be accepted in lieu of utilities' test of new meters of the positive displacement type.

8.3.2. Whenever, on installation, periodic or any other test, a utility finds a meter to exceed a limit of two percent (2%) fast or slow, the utility must adjust the meter to register as nearly one-hundred percent (100%) as is commercially practicable. For displacement, multi-jet, propeller, and turbine meters, the normal test-flow-percent accuracy shall be the average of the accuracy results at the intermediate and maximum test-flow rates. For compound and fire-service meters, the normal test-flow-percent accuracy shall be the average of the accuracy results at the maximum test-flow rate of the main line meter and the intermediate and maximum test-flow rates of the bypass meter.

8.3.3. After a utility makes all necessary repairs, adjustments and final tests so that the meter registers accurately, the utility shall seal the meter. It is recommended that all meters of the disc or displacement type, two inch (2") or less in size, be tested before being installed on the premises of any customer.

8.3.4. A utility shall always test a meters of the turbine type, two inch (2") and larger, after installation. A utility shall install these meters with a "Test Tee" and valve for use in testing.

8.3.5. Meters of the turbine type can be tested and calibrated more accurately in place. The accuracy of turbine meters is affected by changes in distribution of velocities through the meter. Such variation of velocity may occur to an appreciable degree through change of nature of inlet piping.

8.3.5.a. A Commission certified meter prover shall perform all tests to determine the accuracy of registration of any water meter.

8.3.6. Meter Test Flow. -- Flow rates shall be in accordance with "American Water Works Association" standards.

8.3.7. Tests -- How Made. -- The testing procedures shall be in accordance with American Water Works Association standards.

8.4. Periodic test.

8.4.1. Meters shall be periodically tested as follows:

3/4" or less in size at least once every 10 years.
1" in size at least once every 7 years.
1-1/4", 1-1/2", 2" in size at least once every 5 years.
3" in size at least once every 3 years.
4" and larger in size at least once each year.

8.4.2. "Periodic test periods" for testing meters in the system of utilities supplying water of high turbidity, or of peculiar characteristics, will be determined by the Commission from time to time.

8.4.3. The time frame for periodic tests may be modified by the Commission from time to time upon the submission of evidence by the utility to substantiate any request for modification.

8.5. Request tests.

8.5.1. Action required. -- If any customer requests in writing to the utility a test of the accuracy of his or her meter, and the meter is not due for periodic testing, the utility shall notify the customer of the conditions under which the test will be made by the utility or by a referee. If the customer requests that the utility proceed with the test and remits an amount equal to the estimated cost to be incurred by the utility, but not less than ten dollars ($10), the utility shall make the test promptly. The meter tester shall provide a report giving results of the test to the customer and the utility, and a complete record of the test shall be kept within the applicable Division of the Commission. If, when tested, the meter is found to be more than two percent (2%) in error, the utility will refund the amount advanced to the customer. If the meter is not found to be more than two percent (2%) in error, the utility shall retain the amount advanced by the customer for the test.

8.5.2. Customer's privilege. -- A customer may be present when the utility conducts the test on the customer's meter or, if the customer desires, may send an expert or other representative appointed by the customer.

8.5.3. If the customer files a complaint with, or makes a request for assistance from, the Commission regarding the accuracy of his or her meter, the Commission will notify the utility and the utility shall have a representative present to remove the meter and assist a Commission inspector with the test. This test shall be made at the expense of the utility.

8.5.4. Report to customer. -- Within ten (10) days after the completion of the test, a utility will provide to the customer a report giving the name of the customer requesting the test, the date of the request, the location of the premises where the meter had been installed, the type, make, size and serial number of the meter, the date of removal, the date tested, and the result of the test.

8.6. Meter testers.

8.6.1. Meter tester required. -- A utility shall have in its employ or have access to the services of one or more competent meter testers whose duty is to perform tests to determine the accuracy of the utility's meters.

8.6.2. Certification of meter tester. -- A utility desiring to certify an employee as a meter tester must secure a qualification card from the Commission in the form of Water Form No. 9; have same executed by the applicant and returned to the Commission; together with a certification by a responsible representative of the utility as to the facts contained on the card. The Commission will then schedule a certification test consisting of a written examination and demonstration test of the applicant's meter testing skills on certified testing equipment. If the applicant's qualifications are satisfactory, the Commission will then issue a card to the employee in the form of Water Form No. 10, authorizing the employee to test meters of the type and size shown on the card.

8.6.3. Experience required. -- No employee of a utility is authorized to test meters unless the

employee has had at least six (6) months' experience in a utility water-meter shop, or equivalent experience, part of which time must have been spent working on the type meter for which authority to test has been requested. All tests must be made by an authorized meter tester.

8.6.4. Reports to Commission.

8.6.4.a. A utility shall file on or before February 1st, each year, a list of the individuals in its employ authorized to test meters.

8.6.4.b. A utility shall notify the Commission and shall take up and return the meter tester's card when a certified meter testers ceases to be in its employ.

§150-7-9. Safety Requirements.

9.1. Accidents. -- A utility shall keep a record of every accidental happening in connection with the operation of its plant, station, property, and equipment, whereby any person is killed, or seriously injured, or any property damaged or destroyed, with full statement of the cause of the accident, and the precautions taken to prevent similar accidents in the future.

§150-7-10. Creation or Alteration of Public Service Districts.

10.1. Creation or alteration of a public service district.

10.1.1. A county commission upon entering an order on its own motion, or upon receipt of a petition, or upon receipt of a recommendation of the Commission, proposing the creation, enlargement, reduction, merger, dissolution, or consolidation of a public service district pursuant to W. Va. Code §16-13A-2, shall:

10.1.1.a. At the same session, fix a date of hearing in the county which date shall be not more than forty (40) days nor less than twenty (20) days from the date of the action;

10.1.1.b. Within ten (10) days, provide the Executive Secretary of the Commission with a copy of the order or petition and notification of the time and place of the hearing to be held by the county commission;

10.1.1.c. If the territory proposed to be included is situated in more than one county, when fixing the date of hearing, provide for notifying the county commission and clerk thereof of each of the other counties into which the territory extends of the date so fixed;

10.1.1.d. Publish, at least ten (10) days prior to the hearing, a Class I legal advertisement meeting the requirements stated in W. Va. Code §16-13A-2, giving notice of the hearing;

10.1.1.e. Post notice in at least five (5) conspicuous locations in the proposed public service district as required by W. Va. Code §16-13A-2; and

10.1.1.f. File with the Executive Secretary of the Commission affidavits of publication pursuant to Water Rule 10.1.1.d., and affidavits of posting pursuant to Water Rule 10.1.1.e. as soon as the same are available.

10.2. Notification to the Commission of county commission action.

10.2.1. If the county commission enters an order creating, enlarging, reducing, merging, dissolving, or consolidating a public service district, the county commission shall, within ten (10) days of entering such order, file a copy of such order with the Executive Secretary of the Commission. If the county commission declines to enter such an order, the county commission shall, within ten (10) days of declining, file with the Executive Secretary of the Commission notice that it has declined to enter any such order.

10.3. Notice of Filing.

10.3.1. Upon the receipt of a county commission order proposing the creation, enlargement, reduction, merger, dissolution, or consolidation of a public service district pursuant to W. Va. Code §16-13A-2, the Commission may provide notice of the proceeding through the issuance of a Class I legal advertisement in the form prescribed by the Commission, in the county or counties affected by the proposed order. The notice shall include the right of any customer of the proposed public service district or other interested party to file a written protest. See Water Form No. 8 for example of notice to be published.

10.4. Commission hearing.

10.4.1. The Commission may hold a hearing or hearings in each county affected by a county commission order(s) filed pursuant to Water Rule 10.1.1. If the Commission holds a hearing, the Commission shall publish a Class I legal advertisement giving notice of the hearing or hearings.

10.5. Commission consideration of proposed creation or alteration.

10.5.1. After public comment and hearing, if held, the Commission shall, by order, approve, disapprove or modify a county commission order creating, expanding, merging, consolidating, reducing or dissolving a public service district. In deliberating on approval, modification or disapproval the Commission may consider, among other things:

10.5.1.a. the public convenience and necessity;

10.5.1.b. the economic feasibility, including sources of funding, costs and related benefits of the county commission's order;

10.5.1.c. the adequacy of facilities;

10.5.1.d. other facilities in the area; and

10.5.1.e. other possible alternatives.

§150-7-11. Distressed and Failing Water or Wastewater Utilities.

11.1. Definitions – These definitions are specific to Section 11 of this rule.

11.1.1. "Distressed Utility" – a water or wastewater utility that for financial, operational or managerial reasons:

(1)(a) Is in continual violation of statutory or regulatory standards of the Bureau for Public Health, the Department of Environmental Protection, or the Commission, which affect the water quality, safety, adequacy, efficiency or reasonableness of the service provided by the water or wastewater utility;

(b) Fails to comply within a reasonable period of time with any final, nonappealable order of the Department of Environmental Protection, Bureau for Public Health or the Commission concerning the safety, adequacy, efficiency or reasonableness of service, including, but not limited to, the availability of water, the potability of water, the palatability of water or the provision of water at adequate volume and pressure and the collection and treatment of wastewater;

(2) Is no longer able to provide adequate, efficient, safe and reasonable utility services; or

(3) Fails to timely pay some or all of its financial obligations, including, but not limited to, its federal and state tax obligations and its bond payments to the West Virginia Water Development Authority, the United States Department of Agriculture (USDA) or other bondholders; fails to maintain its debt service reserve; or fails to submit an audit as required by its bond or loan documents or state law.

11.1.2. "Failing water or wastewater utility" -- a public utility that:

(a) Meets the definition of a distressed water or wastewater utility; and either:

(b) Has not, after a reasonable time period, been stabilized and improved by corrective measures put in place under W. Va. Code §24-2H-7; or

(c) Has had the corrective measures suspended for good cause shown by an order of the Commission.

11.1.3. "Capable proximate water or wastewater utility" -- a public utility that regularly provides adequate, safe and reasonable service of the same type as the distressed utility and is situated close enough to the facilities of a distressed utility that operational management is reasonable, financially viable, and not adverse to the interests of the current customers of the non-distressed utility.

11.2. Potentially unstable water and wastewater utilities.

11.2.1. Commission Staff will review annual reports, rate case filings and other financial data available from public information or from the utility directly and prepare a list of water and wastewater utilities that appear to be financially unstable. This list will be updated annually. Commission Staff will provide the list to the Commission by interoffice memorandum by November 1st of each year.

11.2.1.a. After receipt of the list, the Commission may request from any water and wastewater utility current financial information, including bank statements, detail of accounts payable, detail of current and delinquent taxes payable, detail of pension funds, current debt payment and reserve fund status, and any other pertinent information that the Commission requires.

11.2.2. After the Commission finalizes the list, Commission Staff will contact each utility placed on the list to discuss the stability of the utility.

11.2.3. Each utility contacted shall respond to staff contacts in a timely manner, but in no less than 60 days. The utility shall indicate measures it plans to undertake to address the concerns of the Commission Staff regarding the potential instability of the utility.

11.2.4. Commission Staff will offer to provide advice and assistance to resolve any financial, managerial or operational issues that are contributing to the utility's potential instability.

11.2.5. Commission Staff shall periodically report as directed by the Commission regarding the status of the unstable utility and any measures undertaken by the utility to address the potential instability.

11.3. Determination of whether a utility qualifies is a distressed or failing utility and the identification of one or more capable proximate public or private utilities.

11.3.1. The Commission may on its own motion, or upon a petition by Commission Staff or any other person or entity having a legal interest in the financial, managerial or operational condition of the utility, open a General Investigation proceeding to investigate whether a utility is distressed or failing and to identify any capable proximate public or private utilities that may be able to acquire the utility.

11.3.1.a. The Commission will name as respondents the utility under investigation and any public or private utilities that may be a capable proximate utility.

11.3.2. The Commission will provide notice to named respondents by Order.

11.3.3. The Commission may, by Order, require any named respondent to file specific information in the form of documents, affidavits or prepared testimony.

11.3.4. The Commission will provide Commission Staff and other interested parties the opportunity to file testimony, participate in evidentiary hearings and file briefs in the proceeding.

11.3.5. To determine if a utility is a distressed or failing utility, the Commission will consider:

(1) The financial, managerial and technical ability of the utility;

(2) The level of expenditures necessary to make improvements to the water or wastewater utility to assure compliance with applicable statutory and regulatory standards concerning the adequacy, efficiency, safety or reasonableness of utility service and the impact of those expenditures on customer rates;

(3) The opinion and advice, if any, of the Department of Environmental Protection and the Bureau for Public Health as to steps that may be necessary to assure compliance with

applicable statutory or regulatory standards concerning the adequacy, efficiency, safety or reasonableness of utility service;

(4) The status of the utility's bond payments and other financial obligations;

(5) The status and result of any corrective measures previously put into place; and

(6) Any other relevant matter presented by the respondent utilities, Commission Staff or other interested party.

11.3.6. To determine if a utility is a capable proximate utility, the Commission will consider:

(1) The financial, managerial and technical ability of all proximate public utilities providing the same type of service;

(2) Expansion of the franchise or operating area of a potential acquiring utility to include the service area of the distressed utility;

(3) The financial, managerial, operational and rate demands that may result from the current proceeding and the cumulative impact of other demands where the utility has been identified as a capable proximate utility; and

(4) Any other relevant matter presented by the respondent utilities, Commission Staff or other interested party.

11.4. Hearings and public notice.

11.4.1. The Commission will hold evidentiary and public comment hearing(s) in the service area of the utility under investigation as a potential distressed or failing utility.

11.4.1.a. The Commission will conduct the public comment hearing(s) to receive public comments, including, but not limited to, comments regarding possible options available to bring the potential distressed or failing utility into compliance with appropriate statutory and regulatory standards.

11.4.1.b. The Commission will conduct the evidentiary hearing to receive evidence to determine if the utility is a distressed or failing utility and whether a capable proximate utility should acquire the utility. If there is more than one proximate utility the Commission will also receive evidence to allow the Commission to determine the appropriate capable proximate utility.

11.4.2. The Commission will give notice of the time, place and subject matter of the hearing as follows by:

(a) placing a Class I legal publication in a qualified newspaper pursuant to W. Va. Code §59-3-2(a) in the county or counties where the utility is located no more than 10 days before the date of the hearing;

(b) issuance of a press release; and

(c) providing written notice by certified mail or registered mail to the utility under investigation; the Consumer Advocate Division; any proximate utility that was made a party to the proceeding; the county commission if the utility under investigation is a public service district; and the municipality if the utility is owned and operated by a municipality.

11.4.3. The Commission will, by Order, direct the utility under investigation to give notice to its customers of the time, place and subject matter of the hearing either as a bill insert or in print on its monthly bill statement or, if neither form of notice is reasonably possible, by a separate mailing.

11.4.4. Following the evidentiary hearing, the Commission shall enter an order stating whether the utility is a distressed or failing utility and identifying the capable proximate utilities, if any.

11.5. Alternative, intermediate remedies for distressed or failing utilities.

11.5.1. Before designating a utility as failing, the Commission must determine if one or more of these alternative remedial actions, is reasonable and cost effective for the distressed utility or the capable proximate utility:

(1) reorganization of the utility under new management or a new board, subject to the approval of the applicable county commission(s) or municipal government;

(2) operation of the distressed utility by another public utility or management or service company under a mutually agreed arms-length contract subject to approval by the Commission pursuant to W. Va. Code §24-2-12;

(3) appointment of a receiver to manage the operations of the utility;

(4) immediate merger of utility with one or more other public utilities, subject to the approval of the applicable county commission(s) or municipal government;

(5) acquisition of the distressed utility through a mutual agreement made at arms-length subject to Commission approval pursuant to W. Va. Code §24-2-12; and

(6) any viable alternative other than an ordered acquisition by a capable proximate utility.

11.5.2. The alternative remedial action or actions that may be ordered by the Commission are not mutually exclusive. The Commission may order an interim remedial action or actions pending subsequent final actions. The Commission may also order intermediate objectives within set time limits for certain

actions and a time limit for achieving final objectives to remedy financial, managerial, or operating problems that are contributing to the utility being distressed or failing.

11.6. Commission ordered acquisition of a failing utility.

11.6.1. If the goals and objectives set by the Commission pursuant to Water Rule 11.5. are not met, the Commission may, without further hearing, determine that the utility is failing and direct an acquisition.

11.6.2. If the Commission determines that the utility is a failing utility and decides that it is in the public interest to forego any alternative remedial action, then the Commission may order the acquisition of the failing utility by the most suitable capable proximate utility, if there is more than one proximate utility.

11.6.2.a. If the distressed or failing utility is a public service district the Commission shall notify the respective county commission(s) with regard to the acquisition of the distressed or failing utility as provided in W. Va. Code §16-13A-2(a)(2).

11.6.2.b. If the distressed or failing utility is a municipal corporation, then the Commission shall notify the respective municipal council with regard to the acquisition of the distressed or failing utility as provided in W. Va. Code §8-12-17 .

11.6.3. If the Commission orders an acquisition, the Commission will provide a timeframe for the failing utility and acquiring utility to agree on acquisition terms, timing, and acquisition price.

11.6.4. Preceding the final acquisition, the Commission may order the capable proximate utility to assume control of the management and operations of the failing utility under a temporary management and operating agreement subject to Commission approval.

11.6.4.a. The Commission may direct a date for the filing of an agreement for Commission approval.

11.6.4.b. If the agreement is not filed when directed, the Commission may direct the capable proximate utility to file a proposed temporary management and operating agreement.

11.6.4.c. The failing utility may respond to the proposed agreement within the time limits set by the Commission,

11.6.4.d. The Commission may, without further filings or hearing establish the terms of an agreement, direct the capable proximate utility to immediately assume management and operations of the failing utility pending an acquisition and direct the failing utility to turn over its management and operations to the capable proximate utility.

11.6.5. Prior to acquisition, the failing utility shall cooperate with the capable proximate utility in negotiating agreements with state and federal agencies, including, but not limited to, negotiation of hold harmless agreements, consent orders or enforcement moratoria during any period of remediation.

11.6.6. The parties to an acquisition may propose to the Commission such methods of determining the acquisition price as they can support as being reasonable and in the public interest.

11.6.6.a. The acquisition price must, at a minimum, satisfy all outstanding loans, tax obligations, required grant repayment, liens and indebtedness owed by the failing utility or the acquiring utility may agree to assume the indebtedness if legally permitted.

11.6.6.b. The acquiring utility may propose to pay failing utility outstanding obligations directly, as part of the acquisition consideration, and shall consult with the lenders or lienholders regarding payment in full or the assumption, to the extent legally permissible, of such obligations.

11.6.7. If bondholder consent is required to finalize an acquisition, the failing utility must cooperate with the acquiring utility in obtaining the consent of bondholder(s).

11.6.8. The acquiring utility must submit a financing plan that includes documentation on how the failing utility's indebtedness will be paid or assumed.

11.6.9. If the parties are unable to agree on an acquisition price or any other terms related to the acquisition within the time allowed by the Commission, the Commission may, on its own motion, or upon a petition by either the failing or capable proximate utility, conduct an evidentiary hearing to determine the acquisition price and any other issues related to the acquisition.

11.7. Rates pertaining to recovery of costs for acquisition, operation, repairs and improvements to distressed or failing utility facilities.

11.7.1. The acquiring utility shall propose the rates to be charged after acquisition.

11.7.2. Without a separate rate or tariff filing and without further notice to customers, the acquiring utility may adopt the rates of the acquired utility not subject to true-up but subject to adjustment in future rate proceedings.

11.7.3. The Commission may approve an appropriate and reasonable cost recovery mechanism to allow the capable proximate utility to recover its acquisition costs and projected cost of service of operating, maintaining and improving the facilities of the failing water or wastewater utility or its net costs incurred to operate, maintain and improve the distressed utility under a Commission approved operating agreement.

11.7.4. Subject to Commission approval in a separate rate or tariff proceeding, which shall be considered by the Commission on an expedited basis without the need for a full base rate proceeding the acquiring utility may request:

(a) that it be permitted for a reasonable period of time after the date of acquisition to apply a surcharge on the adopted rates or to establish a surcharge on the acquiring utility's tariff applicable only to customers of the acquired utility;

(b) a surcharge or surcharges on acquired customers and existing customers;

(c) that it be allowed to charge the customers of the acquired utility pursuant to a separate tariff which may be higher or lower than the existing tariff of the acquired utility; or

(d) a surcharge on its existing customers related to its costs as a capable proximate utility.

11.7.5. Subject to Commission approval and other rate provisions of this rule, if requested by the acquiring utility, a cost recovery mechanism determined by the Commission to be appropriate, reasonable and in the public interest may include:

(a) A surcharge above existing rates that allows recovery of incremental costs, net of recovery through existing rates necessary to operate, maintain and improve the failing utility's service level to an acceptable level and into compliance with all applicable regulatory standards;

(b) A rate base acquisition adjustment to private for-profit utilities as an incentive to acquire a failing utility;

(c) An increased return on investment as an incentive to acquire a failing utility; or

(d) Any other incentive method proposed by the acquiring utility if the method is determined by the Commission to be appropriate, reasonable and in the public interest.

11.7.6. Rate increments and surcharges, other than adoption of existing rates, approved by the Commission shall be subject to adjustment on an annual basis to reflect changes in costs, additional projected capital and operating costs and true-up of any over or under recoveries of costs.

Water Form No.1
(Water Rule 6.8.1.)

(Insert Company Name Here)

NOTICE OF SCHEDULED TERMINATION OF SERVICE AND CUSTOMER RIGHTS

We have scheduled your water service provided at _____ (address) for termination on or after _____ (date). This action has been taken for the following reason(s):

(Include reason and facts resulting in decision to terminate service).

If your service is terminated you may be subject to additional charges involving reconnect fees and deposit requirements in order to restore service.

(Include all applicable charges.)

YOU HAVE THE RIGHT TO CHALLENGE THE TERMINATION IF YOU BELIEVE ANY OF THE FOLLOWING CONDITIONS APPLY TO YOU:

1. Any portion of the bill is in dispute
2. You are being charged for service not received
3. The information above is incorrect
4. You are unable to pay the bill in accordance with the billing, and termination of service would be especially dangerous to the health or safety of a member of your household.
5. You are able to pay only installments

If the reason for your challenge is 1, 2 or 3 above, you will have to pay any amount not in dispute. If the reason for your challenge is 4 or 5, we will attempt to negotiate a deferred payment agreement with you.

YOU MUST NOTIFY US BEFORE THE DATE OF TERMINATION IN ORDER TO PROTECT YOUR RIGHTS UNDER THIS RULE:

(Provide instructions for contacting the appropriate utility personnel by telephone and mail, including business hours)

You should also inform us if you are 65 years or older, or regardless of age, if you are physically, mentally, or emotionally incapacitated.

Once you have notified us of your challenge, we will schedule a meeting at the business office nearest to your residence and try to resolve your problem. At your option, the discussion of your challenge may be made over the telephone. **IF YOU ARE NOT SATISFIED WITH OUR DECISION AT THIS MEETING, YOU WILL HAVE SEVEN DAYS IN WHICH TO FILE A CHALLENGE WITH THE PUBLIC SERVICE COMMISSION OF WEST VIRGINIA.** You will be required to pay your current bill while the challenge is pending. There is no charge associated with filing a challenge and you may do so without the assistance of an attorney.

To file a challenge with the PSC, you may call this toll free telephone number 1-800-642-8544 or write to this address:

Utility Challenge
Public Service Commission of West Virginia
P. O. Box 812
Charleston, W. Va. 25323

If you are in need of assistance to pay your bill, you should contact the following agencies: (List agencies in service area).

If you desire the assistance of a lawyer with regard to the scheduled termination and are unable to pay for legal counsel, contact one of the following low income legal assistance organizations: (List agencies in service area).

Water Form No. 2
(Water Rule 6.8.1.h.)

NOTICE OF SCHEDULED TERMINATION

We have scheduled water service provided at _____
(address)
for termination on or after _____ because of your landlord's delinquent water bill.
(Date)

To notify the Public Service Commission, you may call this toll free telephone number, 1-800-642-8544, or write to this address:

Public Service Commission of West Virginia
P.O. Box 812
Charleston, WV 25323

If you desire the assistance of a lawyer with regard to the scheduled termination and are unable to pay for legal counsel, contact one of the following low income legal assistance organization: (List agencies in service area).

Water Form No. 3
(Water Rule 6.13.4.)

PUBLIC NOTICE OF FILING OF A PETITION FOR THE IMPOSITION OF A MORATORIUM

Case No. _____

NAME OF UTILITY _____ ,
a public utility.
Petition for consent and approval for the imposition of a moratorium on the utility system.

PUBLIC NOTICE

On _____ (Date) , the _____ (Name of Utility, Commission Staff, or governmental entity) filed a petition with the Public Service Commission for approval of the imposition of a moratorium on

_____ [name of utility] 's _____ [water, sewer, or other] system serving system serving _____ (describe areas served). If approved, the moratorium would mean that no new customers could be served by the utility in these areas until the Commission lifts the moratorium. The _____ (name of petitioner) claims that the imposition of a moratorium is appropriate because

_____
[describe reasons and describe any plans to alleviate the circumstances giving rise to the petition, and any estimate of a date when it would be appropriate for the Commission to lift the moratorium.]

Any person wishing to protest, support, make comment, or request a public hearing about the proposed moratorium should do so in writing. Written statements should be addressed to the Executive Secretary, Public Service Commission, P.O. Box 812, Charleston, WV, 25323.

NAME OF UTILITY

Water Form No. 4
(Water Rule 7.5.5.b.)

Form of written request for service by a prospective customer or
a group of prospective customers located in the same neighborhood

Water ( ) Water and Sewer ( )

Previous Customer ( ) If so, when _____ New customer ( )
Name _____
Mailing address _____ Phone _____
Property location _____
Rent ( ) Own ( ) Other _____
If rent: Property owners name _____
Property owner's mailing address _____ Phone _____
Type of service: Residential ( ) Number in household _____
Commercial ( ) Type _____
Industrial ( ) Type _____
Applicant's place of employment _____
Employment address _____ Phone _____
Name of spouse _____

Spouse's place of employment _____

Spouse's employment address _____ Phone _____

I HEREBY AUTHORIZE SERVICE TO BE ESTABLISHED IN MY NAME AT THE ABOVE PROPERTY LOCATION AND AGREE TO PAY FOR SERVICE UNTIL DISCONTINUED BY MY REQUEST IN WRITING. I UNDERSTAND THAT THIS APPLICATION IS ACCEPTED SUBJECT TO THE AVAILABILITY OF SERVICE AT THIS LOCATION.

Applicant's signature _____
Date _____
Utility representative _____ Date _____

Water Form No. 4
Page 2 of 2

For office use only

Name _____ Account No. _____
Applicant ID _____

Deposit amount _____ Tap fee amount _____
Meter Size _____ Meter No. _____
Meter Route _____ Meter reading _____
Date on _____ Date off _____
Customer request ( ) Termination ( )

Water Form No. 5
(Water Rule 7.5.5.b.)

Form for use in determining cost estimate
to extend water service

Date _____
The following estimate is in response to a request to extend the Utility's water facilities approximately _____feet along _____
to serve a customer or customers who desire water service.

Cost Estimate

Water line (- inch PVC) _____	feet	@	$_____	/foot	=	$_____
Excavation/installation_____	feet	@	$_____	/foot	=	$_____
Materials (fittings, valves, stone, etc.)		=	$_____			
Permits/rights-of-way (Health, Highways, etc.)_____		=	$_____			
Restoration (seeding, gravel, etc.)		=	$_____			
Related cost (engineering, legal, etc.)		=	$_____			
TOTAL		=	$_____			

Cost Share of Customers and Utility

A. Total estimated cost of extension $_____
B. Utility Share: (estimated total net revenue per customer calculated pursuant to Rule paragraph 5.5.e.4.)
$_____ per customer x _____ customers = $_____
C. Customer share: estimated cost to be paid by customers (A-B) = $_____

Conditions

If the potential customers shall deposit with the Utility, in advance, the total sum of $_____ (customers share from "C" above), a tap fee of $_____per customer, and a $_____ security deposit per customer, the Utility will apply for the necessary permit applications and begin construction as soon as possible.

If the actual cost to construct the extension is less than the estimated cost, the Utility will refund the difference to the original depositors. If the actual cost exceeds the estimated cost the Utility will bill the depositors for the difference.

The customers will be required to sign an application for service and/or a users agreement when the tap fees and deposits are made.

This main line extension estimate is made in accordance with Rule 7.5. of the *Rules for the Government of Water Utilities.*

Water Form No. 6
(Water Rule 7.5.5.b.)
Form of cost estimate to be provided to applicants for service

Dear ~~Mr.~~ Customer:

We have received a petition for a water main extension and have estimated the construction cost to extend the main to serve the properties of the ___(insert number) petitioners. This estimate is summarized below:

Water _____ feet at $_____ / foot	_____
Excavation/Installation _____ feet at $_____ / foot	_____
Materials (fittings, valves, stone, etc.)	_____
Permits/Rights-of-way (Health, Highways, etc.)	_____
Restoration (seeding, gravel, etc.)	_____
Related Cost (engineering, legal, etc.)	_____
Total Estimated Extension Construction Cost	_____
Minus Utility's Share (estimated total net revenue per customer pursuant to Water Rule 7.5.5.d.)	_____
Estimated Cost to be Paid by Customers	_____
Estimated Cost per Customer	_____

When the "customer's share" referenced above is deposited with the Utility, the Utility will apply for the necessary permit applications and begin construction as soon as possible. If the actual cost to construct the extension is less than the estimated cost, the Utility will refund the difference to the original depositors. If the actual cost exceeds the estimated cost, the Utility will bill the depositors for the difference. This difference must be settled before service can actually be connected.

All customers will be required to sign an extension agreement and an application for service and/or a users agreement and pay a tap fee of $_____ , and a security deposit of $_____ prior to receiving service. The security deposit is refunded with interest following twelve consecutive months of full and timely payments for services rendered.

The estimated start date of construction is _____.
The estimated duration of construction is _____days.

Should you have any questions, you may contact Barbara Manager or John Foreman at _____between 9:00 a.m. and 4:00 p.m., Monday through Friday.

Sincerely,

Water Form No. 7
(Water Rule 7.5.8.g.)

Form of Commission Check-List for Alternate Main Extension Agreements

This form sets forth the minimum amount of information that should be included in a proposed alternate main extension agreement.

□ 1. Name of developer, mobile home park owner or prospective customers(s).

□ 2. General location or description of area to be served.

□ 3. Indication that the developer, owner or prospective customer(s) has/have read Water Rule 7.5., Sewer Rule 7.4., or both.

□ 4. Indication that the developer, owner or prospective customer(s) understand(s) the Rules.

□ 5. Having read and understood the Rules, the developer, owner or prospective customer(s) choose(s) to enter into the alternate main line extension agreement.

□ 6. If the developer, owner or prospective customer(s) waive(s) reimbursement, the agreement should contain the waiver.

□ 7. A copy of the applicable Rule(s) must be attached to the agreement.

□ 8. A statement as to who will bear the cost of inspection, if any.

□ 9. If the customer is to bear the cost of inspection, a statement of the maximum amount of the cost of inspection.

□ 10. If the developer, owner or prospective customer(s) wish(es) to waive the right of receiving an estimate of the cost of the extension if constructed by the utility, a statement reflecting the waiver.

□ 11. A statement as to the type of testing to be required.

□ 12. A statement as to who will bear the cost of testing, if any.

□ 13. If the customer is to bear the cost of the testing, a statement of the maximum amount of the cost of the testing.

□ 14. A statement as to who will install the service connections.

□ 15. If the developer, owner or prospective customer(s) is/are to install the service connections, a statement that the utility will not charge a tap fee.

□ 16. A statement that the tap fee, if any to be charged, is the approved tap fee in the utility's tariff.

□ 17. A statement that the utility is to be indemnified and held harmless against any and all claims for injuries and/or damages which may arise from problems associated with the construction of the extension by the developer, owner or prospective customer(s).

□ 18. A statement that the ownership of the extension will be conveyed to the utility prior to its connection to the utility's system.

□ 19. A statement indicating who will be responsible for preparing the plans for the extension.

□ 20. If the developer, owner or prospective customer(s) is/are to be responsible for the preparation of the plan for the extension, a statement that the developer, owner or prospective customer(s) will provide plans to the Staff of the Public Service Commission if required.

□ 21. The number of prospective customers to be served by the extension, the number of lots to be served, or some other general indication of the size of the area to be served by the extension.

□ 22. If the initial cost estimate has not been waived, the estimate must be set forth in the agreement.

□ 23. A warranty indicating that the developer, owner or prospective customers will warrant the system for a period of one year after completion of the construction, or after system is placed into service.

□ 24. The agreement should not be executed before being sent to the Commission for approval.

□ 25. A statement as to who will obtain and pay for necessary permits.

□ 26. A statement as to who is responsible for the cost of the construction.

□ 27. A statement as to who is responsible for the cost of the material.

□ 28. A statement describing the extension, including length, diameter and any major components such as fire hydrants, etc.

NOTE: A paragraph such as "The Developer/Customer waives his rights under paragraph 7.3 or 7.5 of the Commission's Rules" will not be acceptable as a catch-all for the requirements listed above. Each item must be addressed in the agreement.

Water Form No.8
(Water Rule 10.3)

PUBLIC SERVICE COMMISSION
OF WEST VIRGINIA
CHARLESTON

At a session of the Public Service Commission of West Virginia, in the City of Charleston, on the ___ day of [month], [year].

[Case No.]

[Case Name]

NOTICE OF FILING

On [date], the [name of party] filed a petition for consent and approval to [type of creation/alteration] the boundaries of the [description of area to be created, enlarged, reduced, merged, dissolved or consolidated] pursuant to W. Va. Code §16-13A-2. A complete description of the boundaries is on file with the [identify entity with which information is filed (for example, county commission and/or public service district)] and the West Virginia Public Service Commission.

Anyone desiring to protest or intervene should file a written protest or notice of the intervention within 30 days following the date of this publication. All protests or requests to intervene should briefly state the reason for the protest or intervention. Requests to intervene must comply with the Commission's rules on intervention, set forth in the Commission's *Rules of Practice and Procedure.* All protests and interventions should be addressed to Sandra Squire, P. O. Box 812, Charleston, West Virginia 25323. If no substantial protest is filed, the Commission may approve the County Commission's Order without hearing.

[Name of Party]

Water Form No.9
(Water Rule 8.6.2.)

(Front)
QUALIFICATION CARD FOR WATER METERTESTER

Name _____ Age _____ Date _____
Address _____
Title _____
Employer _____ Shop Location _____
Supervisor-Name _____ Title _____

GENERAL EXPERIENCE

Type of Work	**Company**	**Years**

***METER EXPERIENCE**

Type Meter	**Nature of Work**	**Company**	**Years**
Testing-			
Disc or Displacement			
Current			
Compound			
Fire Protection			
Testing & Repairing-			
Disc			
Current			
Compound			
Fire Protection			

Remarks: _____

*State, under remarks, in detail the type or kind or work done on meters.

Should this application be approved, I will test all water meters in accordance with the Rules for the Government of Water Utilities of the Public Service Commission of West Virginia, and will not seal or approve for installation any meter that does not meet all of the requirements of the Rules for the Government of Water Utilities.

_____
Signature

(Back of Water Form No. 9)

CERTIFICATE BY RESPONSIBLE REPRESENTATIVE OF THE UTILITY

I, _____ (Name), _____ (Title) of the _____ (Water Company) certify that I have read the questions and answers on this card, relative to the experience of _____ (Name of Employer) and that they are true and correct to the best of my knowledge and belief. I further certify that the above employee is competent to test and repair _____ (Disc) _____ (Current) _____ (Compound) meters and will, faithfully and honestly discharge the duties of meter tester.

_____
Signature

TO BE FILED BY THE PUBLIC SERVICE COMMISSION

The above employee has been authorized to test Water Meters as shown below:

	Testing	**Testing and Repairing**
Disc	_____	_____
Current	_____	_____
Compound	_____	_____

_____
PSCWV Employee

_____
date

Water Form No. 10
(Water Rule 8.6.2.)
(Front)

WATER METER TESTER'S CARD

PUBLIC SERVICE COMMISSION OF WEST VIRGINIA
Charleston, West Virginia

No. _____ Date_____

_____
Name of Employee

is hereby authorized to test and repair the following type or types of water meters:

	Testing	**Testing and Repairing**
Disc	_____	_____
Current	_____	_____
Compound	_____	_____
Utility	_____	_____
Shop Location	_____	_____

_____
PSCWV Employee

(over)

(Back)

This card must be returned to the Public Service Commission of W. Va. by the

_____ when _____ leaves the employee of the

company or ceases to serve as meter tester.

ALTERNATE MAINLINE SEWAGE COLLECTION SYSTEM AGREEMENT

THIS AGREEMENT (the "Agreement") is made and effective this _____ day of _____, 2022, by and between the CITY OF CHARLES TOWN, by and through the CHARLES TOWN UTILITY BOARD, (hereafter, "CTUB") and B.C. Partners, Inc.(hereafter " the DEVELOPER").

WHEREAS, CTUB has been authorized by City Ordinance Chapter 13, Article II to develop sewage collection and treatment facilities throughout its service area, together with vicinity residents and businesses, with public sewer service; and

WHEREAS, CTUB wishes to make public sewage collection and treatment facilities available to the greatest number of residential, commercial and industrial customers located within the service area as expeditiously as possible; and,

WHEREAS, the DEVELOPER is planning to develop certain lands known as Country Club Commons Subdivision (the "Development") located within CTUB's service territory within Jefferson County for commercial property ; and,

WHEREAS, the Development will be located at the Northeast Corner of Route 340 and Route 24, Country Club Road; and

WHEREAS, the DEVELOPER intends to construct up to four (4) Commercial Lots that may contain a Convenience Store (with gas pumps), Bank, Pharmacy and Restaurant or any combination of commercial uses that will generate approximately 8,250 gallons (55 EDUs) of wastewater per day. It is understood by both parties to this Agreement that an increase of more than an additional 25 EDUs per day in the estimated generation of wastewater will require the execution and submission to the Public Service Commission of an amended mainline sewage collections system agreement ; and

WHEREAS, the DEVELOPER intends to construct on-site sewage collection systems on, in the area near to, or adjacent to the Development (the "Sewage Collection Systems") to service the Commercial Lots, which will connect to the sewage collection and pumping system of the CTUB; and

WHEREAS, it is in the best interest of the future users of the Development to have public sewer collection facilities available: and

NOW, THEREFORE, for and in consideration of the covenants and agreements set forth herein, and other good and valuable consideration the receipt and sufficiency of which are hereby acknowledged, the BOARD and the DEVELOPER agree:

DRAFT

ARTICLE I

DESIGN AND REGULATORY APPROVAL

Section 1.01. The DEVELOPER hereby agrees to employ qualified professional engineers to design the on-site and off-site sewage collection system for the DEVELOPER'S project, as described in general herein. All designs will be developed at the DEVELOPER'S expense and comply with CTUB'S Sewer System Specifications. All designs shall be reviewed and approved by CTUB's engineer prior to submission to the West Virginia Bureau for Public Health and the West Virginia Division of Environmental Protection for permits to construct and prior to the commencement of construction. Neither CTUB or its engineers or agents shall bear any financial or any other responsibility for the design and construction of the Sewage Collection System.

Section 1.02. The DEVELOPER shall, at his own expense, submit the plans and specifications to the appropriate State, Federal, and local agencies for their approval. Any changes in the plans and specifications required by the governmental agencies shall be subject to the approval of CTUB.

ARTICLE II

CONSTRUCTION AND INSPECTION

Section 2.01. The DEVELOPER will construct the entire sewer pumping and collection system under this Agreement, including but not limited to, all main lines, service lines, pumping facilities, or other necessary appurtenances, for all residential, commercial, or other customers, either proposed or existing, within the development at the DEVELOPER'S expense. All construction shall be done in accordance with the approved plans and specifications for the Development and CTUB's current specifications. The DEVELOPER shall obtain, at his own expense, with the cooperation and support of CTUB, all necessary permits, authorizations and approvals of State, Federal, and local agencies during the construction phase and shall make such changes as are required by said agencies during this phase and such changes shall not be subject to further approval by CTUB.

Section 2.02. The DEVELOPER shall, with the cooperation and support of CTUB, obtain all necessary rights-of-way, real property, easements and take all other such actions, including but not limited to, legal action, as are necessary to complete the Sewer Collection System, at the DEVELOPER'S own expense. CTUB shall, at the request of the DEVELOPER, take such actions as are permitted by law to aid in obtaining the necessary rights of way, real property or easements on land not owned by the DEVELOPER, including, but not limited to, legal actions. The cost of

DRAFT

said actions requested by the DEVELOPER, including amounts paid to property owners for the required real estate and easements as well as all litigation costs and taken by CTUB shall be borne by the DEVELOPER.

Section 2.03. Prior to the substantial completion of the construction of the Sewage Collection System or phase thereof, CTUB shall have the right to inspect and approve the system of phase thereof to ensure that: (1) sewage will be satisfactorily transported from the Development in accordance with the terms of this Agreement and all applicable statutes, rules, and regulations legally applicable to CTUB; (2) infiltration will be minimized; (3)illegal and improper sources of inflow are eliminated; and (4) the system was constructed using sound engineering and construction standards, and using materials in compliance with CTUB's standards and specifications.

Section 2.04. CTUB shall have the right to inspect all work of the DEVELOPER, and its contractors, during all phases of construction to insure adequate installation of the system. The DEVELOPER shall pay CTUB for its construction inspection services. All fees shall be paid by the DEVELOPER to CTUB within fifteen (15) days of the date of the preconstruction meeting. Inspection services shall be no more than $1,500.00 per week for full-time inspection services for water and sewer installation.

Section 2.05. At the conclusion of construction, The DEVELOPER shall provide to CTUB a complete set of reproducible copies of the record drawings of the completed construction for the mainline extension, signed and sealed by the engineer who prepared the plans. Also, the DEVELOPER shall provide CTUB with executed easements for all sewer mains. SEWER SERVICE FROM THE MAINLINE EXTENSION COVERED BY THIS AGREEMENT WILL NOT BE GRANTED UNTIL THE "RECORD DRAWINGS" AND THE EXECUTED EASEMENTS ARE RECEIVED BY CTUB.

Section 2.06. At all times during the construction of said sewer system, the DEVELOPER shall maintain sole ownership of said sewer system.

Section 2.07. The DEVELOPER shall complete the mainline extension covered by this Agreement within five (5) years from the date of this Agreement. Failure to do so may make this Agreement null and void as to any uncompleted portions of the mainline extension. CTUB reserves the right to require the DEVELOPER to enter into a new agreement, have a design review and secure new permitting for the completion of the Project if sufficient proof can be demonstrated that rules, regulations or surrounding conditions have changed during the five (5) year time frame.

DRAFT

ARTICLE III

TRANSFER OF OWNERSHIP

Section 3.01. Upon completion of the construction of the Sewage Collection System, or phase thereof, or parts of phases thereof at the discretion of CTUB, the DEVELOPER shall, with the cooperation and support of CTUB, obtain such State, Federal, and local certifications, authorizations, or approvals as required, at the DEVELOPER'S expense. After said certifications, authorizations or approvals are obtained, and the Sewage Collection System or phase thereof is completed in all respects, the DEVELOPER shall provide CTUB written notice of said completion. As used in this and subsequent Sections, "completed in all respects" includes, but is not limited to: (i) the system or phase thereof being physically complete; (ii) all testing performed by the certifying engineer; (iii)all electrical and mechanical systems inspected and certified by approved factory authorized representatives of the manufacturers; (iv) all systems or phase thereof having passed component validation, start-up and demonstration periods and training performed; (v) all engineers, material men, contractors and subcontractors of the DEVELOPER being paid for their work on said system or phase thereof; (vi) all rights of way, real property and easements required for the operation of the Sewage Collection System or phase thereof are acquired; (vii) all legal disputes regarding the Sewerage Collection System being materially resolved; and (viii) no outstanding liens on the Sewage Collection System or phase thereof existing.

Section 3.02. Upon receipt of the written notice described in Section 3.01, CTUB shall have thirty (30) days to inspect said Sewage Collection System or phase thereof and run such tests, at CTUB's sole expense, as CTUB feels are appropriate and necessary to determine that the Sewage Collection System or phase thereof has been properly designed and constructed using sound engineering and construction standards. Within the thirty (30) day period, CTUB shall provide the DEVELOPER, in writing, a list of repairs which CTUB reasonably believes are required to cause the Sewage Collection System or phase thereof to comply with the plans and specifications previously approved by CTUB, as may have been modified by the changes required by any applicable State or Federal agency or other City department, and a list of other actions, which the DEVELOPER must take so that the system or phase thereof is completed in all respects in accordance with the approved plans. The DEVELOPER, at the DEVELOPER's own expense, shall make said reasonable repairs and once said repairs have been made, the DEVELOPER will provide CTUB with an additional written notice as set forth in Section 3.01 and CTUB shall have the same rights as it had upon receipt of the initial notice. The DEVELOPER shall not connect any businesses or structures to the sewer system or phase thereof until it has been fully tested by the

DRAFT

engineer and CTUB and all repairs required by CTUB have been made. Notwithstanding the foregoing, if CTUB does not inspect the Sewage Collection System or phase thereof within thirty (30) days after receipt of the written notice described in Section 3.01., CTUB's right to such inspection shall terminate.

Section 3.03. If after receipt of the notice set forth in Section 3.01, CTUB determines that the Sewage Collection System or phase thereof is completed in all respects, the DEVELOPER shall deliver, and CTUB shall accept, ownership of the Sewage Collection System or phase thereof and any additional required off-site Sewage Collection System necessary to connect to the sewage collection and pumping system built as part of the Development, including rights-of-way, and all real property and easements necessary for the ownership, operation and maintenance of the Sewage Collection System or phase thereof and any required additional off-site sewage collection and pumping system. The transfer of ownership shall occur no late than fifteen (15) days after the expiration of the CTUB's right of inspection and testing, set forth in Section 3.02. At that time of the transfer of ownership of the Sewage Collection System or phase thereof to CTUB, to the extent that any of the DEVELOPER'S funds are bonded or subject to a letter of credit tied to the Sewage Collection System or phase thereof, DEVELOPER shall retain ownership in such funds and such funds shall be automatically returned to the DEVELOPER upon the termination of any such bond or letter of credit.

Section 3.04. Ownership of the Sewage Collection System or phase thereof and any required, additional off-site collection and pumping systems shall be transferred by the DEVELPER to CTUB prior to connection to the sewage facilities built by the DEVELOPER as part of the Development.

Section 3.05. Prior to the transfer of ownership of the Sewage Collection System or phase thereof to CTUB, when the DEVELOPER applies for a building permit to construct a residential, commercial or industrial building in the Development, the DEVELOPER shall pay to CTUB (i) a non-refundable tap and inspection fee pursuant to approved CTUB tariff and (ii) a non-refundable capacity improvement fee pursuant to the approved CTUB tariff. Payments shall be made on the same date the DEVELOPER applies for a building permit to construct the residential, commercial or industrial building in the Development, which will result in said additional Customer. Notwithstanding the foregoing, CTUB shall only be entitled to retain a DEVELOPER tap or connection fee if CTUB, using its own resources, actually installs or inspects the tap and/or connection line and physically connects or inspects the connection to the customer's service. Once CTUB collects a tap or connection fee in accordance with the terms of this Agreement, CTUB shall

DRAFT

not be permitted to collect from the customer any additional tap or service connection fee. CTUB shall only be permitted to collect one tap or connection fee per service connection in accordance with its Tariff on file with the PSC. CTUB's right to either retain the DEVELOPER's tap or connection fee deposit or to assess a tap or connection fee from a customer is contingent upon CTUB installing the tap and/or connection line, which physically connects a customer's service to the DEVELOPER's collection system.

ARTICLE IV

DEVELOPER REIMBURSEMENT

Section 4.01. CTUB will not reimburse the Developer for the installation, cost or any other costs associated with the installation and construction of the Sewage Collection System. Developer expressly waives any right to reimbursement under the PSC Rules and Regulations for the Government of Sewer Utilities, 150 CSR 5, Rule 5.5, a copy of which is attached hereto as Exhibit _____, and made a part hereof, and understand that CTUB's extension of service outlined in the Agreement herein shall be construed as an exemption to Rule 5.5 The Developer will collect reimbursement through appropriate pricing of real estate within its Development.

Section 4.02. Not later than fifteen (15) business days following the time of the transfer of ownership of the Sewage Collection System or phase thereof as provided in Article III, Developer shall provide CTUB with an itemized accounting of the costs of the Sewage Collection System or phase thereof. The costs shall include, but not limited to, labor, materials, engineering fees and costs of permits. CTUB shall have a right to review copies of the records of Developer relating to the development of the Sewage Collection System and Developer shall, at the request of CTUB, provide CTUB with copies of all invoices relating to the development of the Sewage Collection System or phase thereof. CTUB shall verify the total cost of the Sewage Collection System or phase thereof and shall give notice in writing to Developer of CTUB's calculation of the total cost of the Sewage Collection System or phase thereof (the "Project Cost").

ARTICLE V

CONDITIONS PRECEDENT

Section 5.01. This Agreement and the respective obligations of the parties are expressly conditioned upon the decision by the DEVELOPER, such decision to be made in the sole and absolute discretion of the DEVELOPER, to commence construction of the Development and upon the written approval of this Agreement by the PSC.

Section 5.02. The DEVELOPER waives the right to receive an estimate of the cost of the extension if constructed by CTUB.

DRAFT

Section 5.03. As a condition to obtaining a main extension, the DEVELOPER shall grant CTUB the necessary easements which would allow CTUB to make future extensions into unserved areas. Such future extensions shall not adversely affect the intended use of the Developer's Property nor shall Developer incur any additional cost for granting of said easement or construction within the easement(s).The granting of the necessary easements by the Developer to CTUB shall be made without CTUB being required to pay additional consideration for the additional easements to the DEVELOPER, but shall be in such locations as shown on the approved Preliminary Plat for the Country Club Commons Development. CTUB has the right to further extend mains from and beyond the terminus of the mains constructed pursuant to this Agreement. In such an event, the DEVELOPER shall not be entitled to any refund for the connection of customers to such extension.

ARTICLE VI

SUBSEQUENT CONNECTIONS

Section 6.01. The DEVELOPER agrees that after the transfer of the ownership of the Sewage Collection System, or any portion thereof, to CTUB, the DEVELOPER shall be assessed, to the extent DEVELOPER owns the property for which a connection is requested, for each new connection upon the issuance of a sewer availability letter (i) a non-refundable tap and inspection fee pursuant to approved CTUB tariff and (ii) a non-refundable capacity improvement fee pursuant to the approved CTUB tariff. Payments shall be made on the same date the DEVELOPER applies for a building permit to construct the residential, commercial or industrial building in the Development, which will result in said additional Customer. Notwithstanding the foregoing, CTUB shall only be entitled to retain a DEVELOPER tap or connection fee if CTUB, using its own resources, actually installs or inspects the tap and/or connection line and physically connects or inspects the connection to the customer's service. Once CTUB collects a tap or connection fee in accordance with the terms of this Agreement, CTUB shall not be permitted to collect from the customer any additional tap or service connection fee. CTUB shall only be permitted to collect one tap or connection fee per service connection in accordance with its Tariff on file with the PSC. CTUB's right to either retain DEVELOPER's tap or connection fee deposit or to assess a tap or connection fee from a customer is contingent upon CTUB installing the tap and/or connection line, which physically connects a customer's service to the DEVELOPER's collection system.

Section 6.02. The DEVELOPER hereby agrees that in the event that the DEVELOPER transfers, prior to completion, any portion of DEVELOPER'S land in the Development to any individual, corporation or other entity who will continue to engage in development of said land as

DRAFT

contemplated by this Agreement, resulting in additional customers for CTUB, the DEVELOPER shall require, as a term of said transfer, that said individual, corporation or other entity assume the obligations of this Agreement.

ARTICLE VII

REPRESENTATIONS AND WARRANTIES

Section 7.01. The parties represent and warrant that the execution, delivery and performance of this agreement by them has been duly authorized and this agreement constitutes a valid and binding obligation of the parties in force full and accordance with its terms.

Section 7.02. The DEVELOPER represents and warrants that the Sewage Collection System or phase thereof will be designed and constructed in a proper workmanlike manner using sound principles of engineering and construction. The DEVELOPER hereby warrants DEVELOPER'S work on the Sewage Collection System's or phase thereof electrical and mechanical components, pump stations and treatment facilities for one (1) year from the date of the transfer of ownership of the Sewage Collection System or phase thereof to CTUB and, during such period, will make such repairs at the DEVELOPER'S expense, as are needed to maintain the Sewage Collection System or phase thereof in a proper operating condition in accordance with the approved plans therefore. CTUB will be responsible for reasonable maintenance of the system according to sound operating procedures and manufacturer's recommendations. The DEVELOPER will not be responsible for repairs due to CTUB failing to reasonably maintain the system.

Section 7.03. Upon notice from CTUB that all construction and testing requirements have been met, DEVELOPER shall post a one (1) year warranty bond in an amount sufficient to replace the system or phase thereof constructed by the DEVELOPER. The amount of the bond shall be 100-percent of the cost of the improvements to be bonded at that time, and shall be for a period of 365 days that will begin on the date ownership of the On-Site and Off-Site Sewage Collection System or phase thereof is transferred to CTUB, At the conclusion of such one (1) year period, any warranty bond with respect to the Sewage Collection System or phase thereof shall automatically terminate and all bonded funds shall automatically be returned to the DEVELOPER.

ARTICLE VIII

MISCELLANEOUS PROVISIONS

Section 8.01. This Agreement shall in no manner alter or affect presently existing rates, charges, minimums or tariffs of CTUB and the same rates, fees, charges, minimums and tariffs shall apply uniformly to all customers of the District. This Agreement shall at all times be subordinate to

DRAFT

any present or future trust indentures or other similar liens on the assets of CTUB, and the parties hereto recognize the priority of any such obligations and upon occurrence of default or assumption of operation and control by the trustee or holders of the bonds of CTUB this Agreement shall be subordinate to such obligations.

Section 8.02. Nothing in this Agreement shall be construed to make CTUB or its engineer and agents liable or responsible for any obligations of the DEVELOPER.

Section 8.03. The DEVELOPER hereby agrees to save and indemnify and keep harmless CTUB, its engineer and agents against all liability claims and judgments or demands for damages arising from accidents to third persons occurring prior to date of the transfer of the ownership of the Sewage Collection System or phase thereof to CTUB, or to property owned by third persons occasioned by the DEVELOPER, its agents, employees, contractors and subcontractors, and against all claims for damages arising from accidents to the DEVELOPER, its agents, employees, contractors and sub-contractors, occasioned by third persons occurring prior to the date of the transfer of the Sewage Collection System to CTUB, except for those legally attributable to CTUB, its engineer or agents, other than the DEVELOPER, or employees of CTUB. The DEVELOPER will defend any and all suits that may be brought against CTUB on account of any such accidents (except those legally attributable to CTUB, its engineer or agents, other than Developer, or employees of CTUB) and will make good to, and reimburse, CTUB for any reasonable, out-of-pocket expenditures (including, but not limited to reasonable legal fees and expenses) that CTUB may make by reason of such accidents.

Section 8.04. The DEVELOPER hereby agrees to save and indemnify and keep harmless CTUB, its engineer and agents from all claims, demands, causes of action, or suits of whatever nature arising out of the labor and materials used by the DEVELOPER and his contractors or sub-contractors, and from all laborers', materialmen's and mechanics' liens upon the Sewage Collection System or upon the property upon which the Sewage Collection System is located arising out of the labor and materials used by the DEVELOPER and its contractors or sub-contractors, and the DEVELOPER shall keep the Sewage Collection System or phase thereof and said property free and clear of all liens, claims and encumbrances until the time of the transfer of ownership of the Sewage Collection System or phase thereof to CTUB.

Section 8.05. Upon transfer of the ownership of the Sewage Collection System or phase thereof to CTUB, nothing in this Agreement shall be construed to provide the DEVELOPER with any ownership or other interest in the Sewage Collection System or phase thereof which will become

DRAFT

the exclusive property of CTUB, or with a right to be reimbursed by CTUB for any and all construction cost, except as provided in this Agreement.

Section 8.06. The DEVELOPER hereby agrees to not pursue any lawsuit, cause of action, or claim of any kind against CTUB regarding insufficient sewage treatment capacity.

Section 8.07. This Agreement constitutes the entire Agreement between CTUB and the DEVELOPER with respect to the matters addressed and may be amended only in a subsequent writing executed by both parties.

Section 8.08. This Agreement may not be assigned by CTUB without the prior written consent of the other party. The DEVELOPER may assign this Agreement without the consent of CTUB if the DEVELOPER sells all or any portion of the Development.

Section 8.09. The article and section headings in this Agreement are merely for the convenient reference of the parties and shall not affect the meaning or interpretation of this Agreement.

DRAFT

CHARLES TOWN UTILITY BOARD

By:_____

Its: _____

ATTEST:

_____

B.C. PARTNERS, INC.

By:_____
Jerry Connelly

Its: Vice President _____

ATTEST:

_____

DRAFT

N/F
KANETTE PETRY
LOT 32
SLEEPY HOLLOW ESTATES
PB.255 / PG.332
HARPERS FERRY DISTRICT 4
MAP 11B
PARCEL 10
DB. 1177 / PG. 556

SLEEPY HOLLOW CT
40' WIDE

E 2,445,150`
N 298,000`

FAIRWAY DRIVE
40' WIDE

N/F
PREMA NAYAK
LOTS 12&13
SLEEPY HOLLOW ESTATES
PB.255 / PG.332
HARPERS FERRY DISTRICT 4
MAP 11B
PARCEL 11
DB. 457 / PG. 402

N/F
DAVID & ANNE STRIDER
LOT 11
SLEEPY HOLLOW ESTATES
PB.255 / PG.332
HARPERS FERRY DISTRICT 4
MAP 11B
PARCEL 32
DB. 573 / PG. 98

STONE
9.54 AC.
415,549 SQ. FT.

20' LANDSCAPE BUFFER (COUNTY STANDARD M-53)
20' PARKING SETBACK (SET)
376.34'
N 13°26'37" W 260.23'
75' BRL DISTANCE REQUIREMENT
BRL
250.00'
S 74°55'33" E
10' LANDSCAPE BUFFER (COUNTY STANDARD M-54)
15' PARKING SETBACK (Typ.)
1218.48'
353.54'

N/F
SLEEPY HOLLOW REAL ESTATE, LLC
HARPERS FERRY DISTRICT 4
MAP 11
PARCEL 7
DB. 1181 / PG. 527

ROW provided for future connection to adjacent Sleepy Hollow

E 2,445,850`
N 297,850`

N 76°41'18" E
5.06'

1
1.88 Ac.

2
1.33 Ac.

B.C. PARTNERS, INC.
PARCEL 11
HARPERS FERRY DISTRICT 4, MAP 11
PLAT BOOK 18, PAGE 22
DEED BOOK 941, PAGE 546
RECORD: 415,562 Sq. Ft. OR 9.5400 Acres
COMPUTED: 415,574 Sq. Ft. OR 9.5403 Acres

232.59'
S15°02'38"W
232.11'
S15°02'38"W

3
1.43 Ac.

Road ROW
PARCEL 5
1.38 Ac.

N/F
SLEEPY HOLLOW REAL ESTATE, LLC
HARPERS FERRY DISTRICT 4
MAP 11
PARCEL 10
DB. 1181 / PG. 527

Outlot (HOA)
PARCEL 7
0.23 Ac.

25' BUILDING SETBACK (Typ.)
15' PARKING SETBACK (Typ.)
BRL
PRL
C1
G3
96.42'
S77° 08' 07"W
PROP. 20' Wide Sewer Easement
61.27'
158.89'
173.96'
N 13°19'16" W 463.23'
237.48'
N74° 57' 22"W
5' Drainage & Utility Easement Line
89.38'
S77° 07' 59"W
C10
15' PARKING SETBACK (Typ.)
25' BUILDING SETBACK (Typ.)
COUNTRY CLUB DRIVE
(50' ROW)
201.22'
N74° 57' 22"W
126.15'
N74° 57' 22"W
30' Landscape Buffer
BRL
PRL
C8
24.86'
C7
11.62'
S49° 07' 15"W
C5
C6
C4
C3
C2
C9
C11
C12
C13
C14
C15
C16
N49° 07' 15"E
11.62'
147.26'
51.87'
S 69°05'35" W 373.12'
N69° 05' 10"E
24.86'
S74° 57' 22"E
161.42'
4
2.56 Ac.
SWM Outlot
PARCEL 6
0.72 Ac.
Corners to be set (typ)
20' / variable width Landscape Buffer
366.08'
N15°02'38"E
122.55'
N27°15'15"W
96.69'
PROP. FUTURE RT 24 ROAD DEDICATION (25' from PROP. CL)
N 297,450`
E 2,444,800`
N/F
NATHAN FREDERICK FARMING & LEASING LLC
CHARLES TOWN DISTRICT 2
MAP 8
PARCEL 30
DB. 1090 / PG. 352
Ex. 30' Esmt.
PROP. FUTURE RT 24 ROAD DEDICATION
2,955.31 SF OR 0.0678 AC
50' BUILDING & PARKING SETBACK
S 62°44'21" W 671.01'
304.94'
N 297,450
E 2,445,600`
ADD RIGHT TURN LANE ON RT 24
N 52°53'16" W 86.71'
HELD PLAT BEARING
TRAFFIC CONTROL CABINET
HIGH MON. (FND. YIELD)
HIGH MON. (VARIES)
18" RCP
INV=464.65
18" RCP
INV=462.50
18" RCP
INV=462.50
x 457.5
US ROUTE 340
WILLIAM L. WILSON FREEWAY
(WIDTH VARIES)
WOLFCRAFT WAY
OLD COUNTRY CLUB ROAD
ROUTE 24
(WIDTH VARIES)

PARCEL DATA		
LOT/PARCEL	AREA (sf)	ACRES
1	81,992.25	1.8823
2	58,043.27	1.3325
3	62,401.17	1.4325
4	111,693.16	2.5641
5 - Road R/W	60,267.65	1.3836
6 - SWM	31,129.56	0.7146
7- Open Space	10,019.94	0.2300
TOTAL	415,547.00	9.5396

CURVE DATA					
NO.	Δ	RADIUS	TANGENT	LENGTH	CHORD BEARING & LENGTH
C1	24°44'04"	225.00'	49.33'	97.13'	S89°29'14"W 96.38'
C2	89°32'40"	41.00'	40.68'	64.08'	N58°05'33"W 57.75'
C3	3°11'21"	225.00'	6.26'	12.52'	N76°33'03"W 12.52'
C4	42°24'03"	41.00'	15.90'	30.34'	S81°26'13"W 29.65'
C5	107°02'00"	70.00'	94.66'	130.77'	S49°07'17"W 112.56'
C6	53°30'59"	41.00'	20.67'	38.30'	S22°21'46"W 36.92'
C7	19°57'55"	150.00'	26.40'	52.27'	S59°06'13"W 52.00'
C8	35°57'28"	150.00'	48.68'	94.14'	S87°03'54"W 92.60'
C9	90°27'15"	41.00'	41.33'	64.73'	S31°54'22"W 58.21'
C10	27°55'26"	175.00'	43.51'	85.29'	N88°55'05"W 84.45'
C11	35°57'28"	200.00'	64.90'	125.52'	N87°03'54"E123.47'
C12	19°57'55"	200.00'	35.20'	69.69'	N59°06'13"E69.34'
C13	53°30'59"	41.00'	20.67'	38.30'	N75°52'45"E36.92'
C14	48°36'00"	70.00'	31.61'	59.38'	N78°20'14"E57.61'
C15	3°55'07"	145.00'	4.96'	9.92'	S31°21'23"E9.91'
C16	24°07'38"	95.00'	20.30'	40.00'	S27°59'23"E39.71'
C17	65°02'34"	41.00'	26.14'	46.54'	S16°35'58"W 44.08'

GRAPHIC SCALE
40 0 20 40 80
(IN FEET)
1 inch = 40 ft. HORIZ.

Plotted: Dec 29, 2021 at 8:30am
S:\CIVIL\PLEASANTS WV COMMERCIAL SITE\ENGINEERING\Preliminary Plan\03-04(EX) CONDITIONS.dwg

REVISIONS

5285 Corporate Drive, Suite 300
Frederick, MD 21703
(301) 695-8614

PIEDMONT DESIGN GROUP

PLANS AND DETAILS ARE EXCLUSIVE PROPERTY OF PIEDMONT DESIGN GROUP, LLC. UNAUTHORIZED USE OF THESE PLANS IS STRICTLY PROHIBITED.
© COPYRIGHT 2018

Subdivision Plat
Country Club Commons
Harpers Ferry District
Jefferson County, WV

SEAL

SCALE: 1"=40'

DESIGN: PSA | CHECK: | APPROVED:

SHEET 4

DATE: Dec. 3, 2021

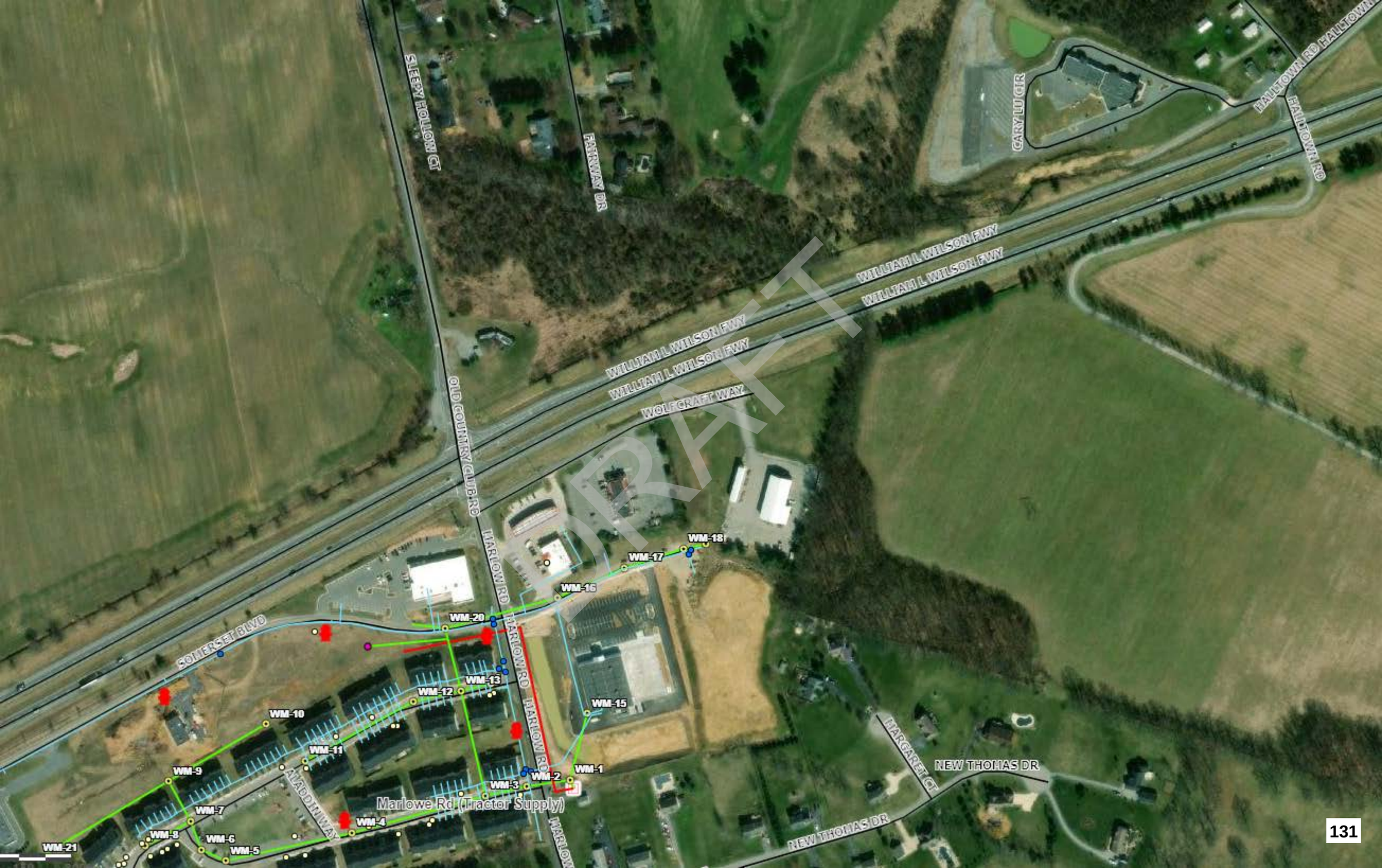
SLEEPY HOLLOW CT
FAIRWAY DR
CARY LU CIR
HALLTOWN RD
HALLTOWN RD
WILLIAM L WILSON FWY
WILLIAM L WILSON FWY
WILLIAM L WILSON FWY
WILLIAM L WILSON FWY
WOLF CRAFT WAY
OLD COUNTRY CLUB RD
HARLOW RD
HARLOW RD
HARLOW RD
SOMERSET BLVD
MEADOWWAY
MARGARET CT
NEW THOMAS DR
NEW THOMAS DR
Marlowe Rd (Tractor Supply)
WM-1
WM-2
WM-3
WM-4
WM-5
WM-6
WM-7
WM-8
WM-9
WM-10
WM-11
WM-12
WM-13
WM-15
WM-16
WM-17
WM-18
WM-20
WM-21
DRAFT
131

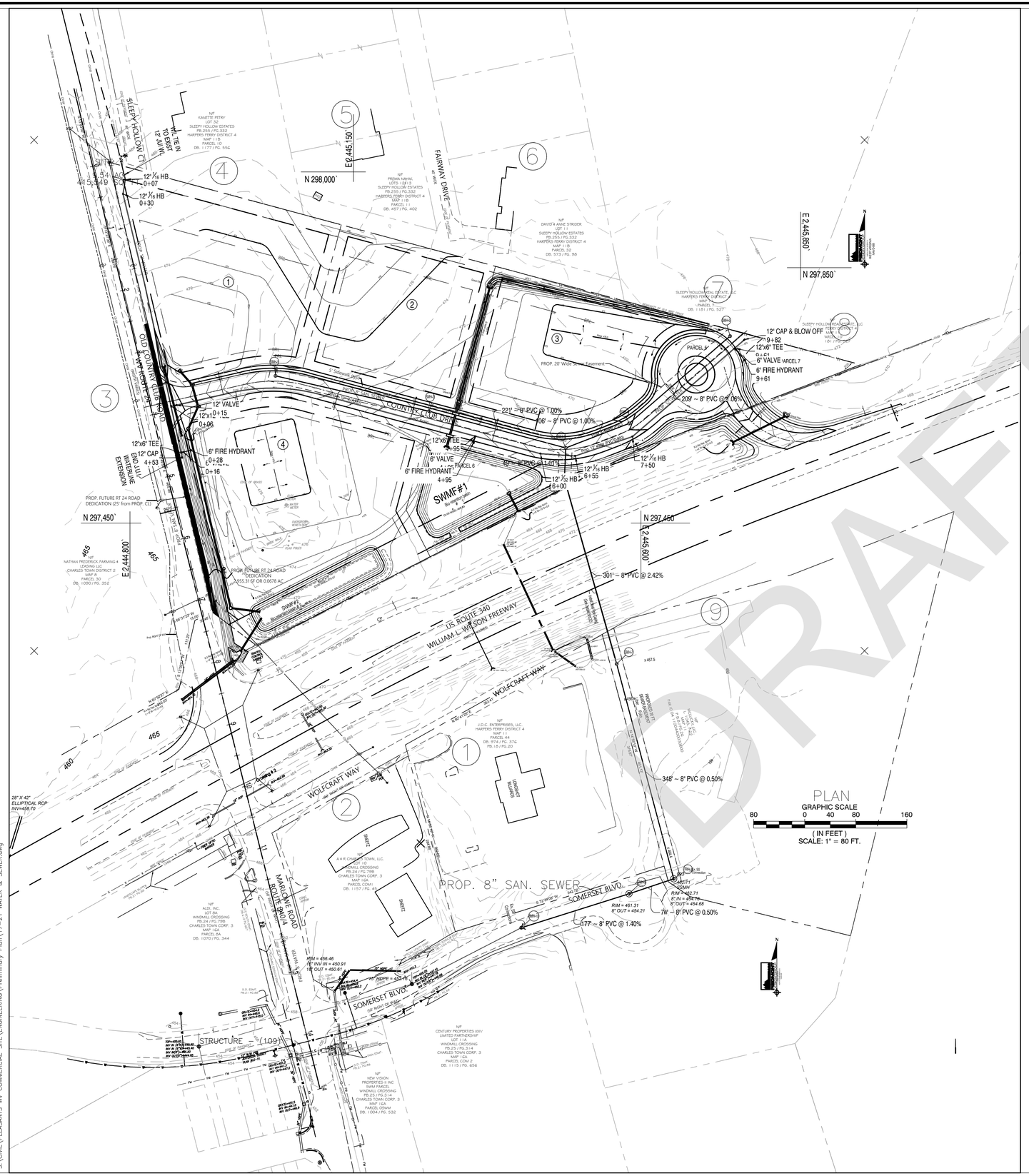

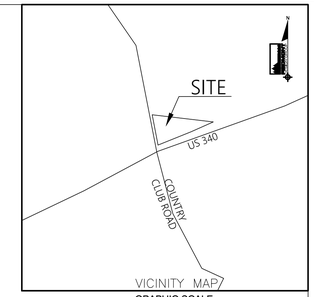

STRUCTURE TABLE						
STRUCTURE	**TYPE**	**TOP ELEVATION**	**PIPE IN**	**INVERT IN**	**PIPE OUT**	**INVERT OUT**
SMH-5	Manhole	476.00			8" PVC	469.00
SMH-4	Manhole	474.94	8" PVC	466.79	8" PVC	466.69
SMH-1	Manhole	474.44			8" PVC	467.44
SMH-3	Manhole	472.93	8" PVC 8" PVC	462.66 465.63	8" PVC	462.56
SMH-2	Manhole	470.65	8" PVC	464.97	8" PVC	464.87
SMH-6	Manhole	469.00	8" PVC	462.07	8" PVC	461.97
Ex MH 4	Manhole	462.71			8" PVC	454.68
REVMH-4 (SMH-8)	Manhole	462.71	8" PVC	451.45	8" PVC	451.35
Ex MH 3	Manhole	461.31	8" PVC	454.32	8" PVC	454.21
REVMH-3 (SMH-9)	Manhole	461.31	8" PVC	450.98	8" PVC	450.88
SMH-7	Manhole	459.20	8" PVC	454.70	8" PVC	453.20
REVMH-2 (SMH-10)	Manhole	457.04	8" PVC	448.40	*8"*	*448.30*
Exist MH 2	Manhole	456.93	8" PVC	448.40	8" PVC	448.30
Exist MH 1	Manhole	454.93	8" PVC	446.80	*8"*	*446.69*

REF.#	*OWNER*	*ADDRESS*	*TAX DIST.*	*MAP*	*PARCEL*	*ZONING*	*DEED BOOK/PAGE*
1.	*J.D.C. Enterprises, LLC*	*P.O. Box 812, Charles Town, WV 25414*	*4*	*11*	*44.2*	*RLIC*	*974/376*
2.	*A & R Charles Town, LLC*	*7237 Preservation Ct. Fulton, MD 20759*	*3*	*16A*	*COMI*	*IT*	*1157/45*
3.	*Nathan Frederick Farming & Leasing*	*198 Thomas Johnson Dr. #207 Frederick, MD 21702*	*2*	*8*	*30*	*RG*	*1090/352*
4.	*Kanette Petry*	*100 Sleepy Hollow Ct., Charles Town, WV 25414*	*4*	*11B*	*10*	*RG*	*1177/556*
5.	*Prema Nayak*	*13 Fairway Dr. Charles Town, WV 25414*	*4*	*11B*	*11*	*RG*	*457/402*
6.	*David & Anne Strider*	*4 Fairway Dr. Charles Town, WV 25414*	*4*	*11B*	*32*	*RG*	*573/98*
7.	*Sleepy Hollow Real Estate, LLC*	*117 W. Patrick St., Frederick, MD 21702*	*4*	*11*	*7*	*RG*	*1181/527*
8.	*Sleepy Hollow Real Estate, LLC*	*117 W. Patrick St., Frederick, MD 21702*	*4*	*11*	*10*	*RLIC*	*1181/527*
9.	*McLucky, LLC*	*18 Rhodes Ct. Harpers Ferry, WV 25425*	*4*	*11*	*44.3*	*RLIC*	*1045/722*

** Abbreviations : RLIC – Residential/Light Industrial/Commercial; RG – Residential Growth; IT – Incorporated Town*

COUNTRY CLUB ROAD

W & S Overall Plan
Country Club Commons
Harpers Ferry District
Jefferson County, WV

REVISIONS

5283 Corporate Drive, Suite 300
Frederick, MD 21703
(301) 695-5614

PIEDMONT DESIGN GROUP

PLANS AND DETAILS ARE EXCLUSIVE PROPERTY OF PIEDMONT DESIGN GROUP, LLC. UNAUTHORIZED USE OF THESE PLANS IS STRICTLY PROHIBITED.
© COPYRIGHT 2020

SEAL

SCALE: AS SHOWN

DESIGN: PDL | CHECK: | APPROVED:

SHEET 17

DATE: DEC 20, 2021

DRAFT

Plotted: Dec 29, 2021 at 1:25pm
S:\CIVIL\PLEASANTS WV COMMERCIAL SITE\ENGINEERING\Preliminary Plan\17-21 WATER & SEWER.dwg

Charles Town
Utility Board

661 S. George Street, Suite 101 Charles Town, WV 25414
Phone: (304) 725-2316 ♦ Fax: (304) 725-7150 ♦ Web: www.ctubwv.com

UTILITY BOARD

CHAIRMAN
Daryl Hennessy

VICE CHAIRMAN
Pete Kubic

TREASURER
Thomas Stocks

INTERIM SECRETARY
Ashley Stottlemyer

City of Ranson
Mayor
Duke Pierson

Jacquelyn Milliron

UTILITY MANAGER
Kristen Stolipher

March 22, 2021

Robert F. Barrick, PE
Piedmont Design Group, LLC.
528 Corporate Drive, Suite 300
Frederick, Maryland 21701

Re: Sleepy Hollow Golf Course Subdivision & Country Club Commons

Dear Mr. Barrick:

The Charles Town Utility Board has reviewed your request for sewer availability for the proposed Sleepy Hollow Golf Course Subdivision and the Country Club Commons commercial development. The intent of this letter is to address each request individually by providing and requesting information accordingly.

Country Club Golf Course Subdivision:

The Charles Town Utility Board (CTUB) has received a request to provide sanitary sewer service for the proposed development of the existing Sleepy Hollow Golf Course. This request comprises 170.44 +/- acres across three parcels and will include both residential and commercial lots. The total capacity request for this project will be 2,077 EDU's.

As part of a recent request from the adjacent Beallair Development, CTUB engaged RK&K to perform an engineering capacity analysis on the Beallair Pumpstation and downstream conveyance to the Breckenridge Pump Station.

The evaluation performed by RK&K and accompanying report dated September 16, 2020 indicates that there are collection system constraints that will need to be addressed by the Developer.

The following options are recommended by CTUB to achieve sewer service:

Option 1 – Convey Sanitary Flows to Beallair Pumpstation with Upgrades

- This option will require an upgrade to the Beallair pumpstation and re-routing of the existing Beallair forcemain. The forcemain will need to be connected to a gravity manhole at the Southern side of the Walmart parking lot. Please refer to the RK&K report dated March 26, 2020 for routing options and estimated costs.

Option 2 – Connect to Country Club Commons Gravity

- This option will require an onsite pumpstation and forcemain to be constructed. The forcemain will discharge to the proposed Country Club Commons commercial development gravity sewer system. Due to the proposed 2,077 EDU's; additional engineering analysis will be required on the downstream collection system to evaluate any additional constraints.

Country Club Commons Commercial Development:

The Charles Town Utility Board (CTUB) has received a request to provide sanitary sewer service for a commercial development consisting of four lots. CTUB understands that the owner is expecting the development to include a gas station/ convenience store, a pharmacy, a restaurant, and a bank. To calculate the estimated Equivalent Dwelling Units (EDU) for these commercial establishments, CTUB utilizes the approved equivalent dwelling units chart provided by the Public Service Commission of West Virginia. The information provided on the proposed commercial establishments by Piedmont Design Group is greatly appreciated. We need additional information on anticipated usage in order to effectively calculate the EDU's in accordance with the WVPSC chart. We understand that some of this information might not be known at this time and therefore may be estimated for planning purposes. Additional EDU revisions that might occur from now until construction shall be communicated to CTUB. The owner will be responsible for all fees associated with any additional EDU's.

- Please provide the estimated number of pumps for the gas station
- We are anticipating the pharmacy to be combined or part of a convenience store. Please provide the number of toilet rooms (restrooms) in the pharmacy.
- Please provided the number of employees for the bank

Upon receipt of the above information, we will evaluate collection system capacity and provide a letter of sewer availability.

With regard to the available capacity at the CTUB Wastewater facilities, there is a combined available capacity of 6,289 EDU's between the Charles Town and Tuscawilla Plants.

If you have any questions, please contact me at (304) 725-2316.

Sincerely,

Travis Markley
Engineering Technician

kstolipher

From: Robert Barrick <robert.barrick@wormald.com>
Sent: Tuesday, March 23, 2021 3:49 PM
To: tmarkley
Cc: kstolipher; Mike Wiley; Daniel Snyder
Subject: RE: Sleepy Hollow & Country Club Commons Sanitary Sewer Request

Travis,

Thanks very much for your response. For Country Club Commons, we just want to make sure that we were clear that this is a separate and unrelated development with regard to Sleepy Hollow and presumably would not be involved in any capacity improvements required for that development.

With regard to your questions in the letter on Country Club Commons:

1. We anticipate roughly three (3) full-time employees at the bank, for a small branch bank
2. We anticipate one men's and one ladies' restroom at the pharmacy (which is anticipated to be in the format of a CVS/Walgreens, not a Target or similar big-box pharmacy). The men's room would presumably have a stall and a urinal and the ladies' room two stalls.
3. We anticipate six (6) pumps for the gas station.

Please let me know if you need any additional information.

Thanks,

Bob Barrick, P.E.
Project Manager
The Wormald Companies & Piedmont Design Group, LLC
5283 Corporate Drive, Suite 300
Frederick, Maryland 21703
301-695-6614 x124
www.wormald.com
piedmontdesigngroup.com

Real Estate Development, Engineering, Architecture, Construction, Brokerage, and Property Management since 1964.

Get social with us:

From: tmarkley <tmarkley@ctubwv.com>
Sent: Tuesday, March 23, 2021 8:13 AM
To: Robert Barrick <robert.barrick@wormald.com>

Cc: kstolipher <kstolipher@ctubwv.com>; Mike Wiley <mike.wiley@wormald.com>
Subject: Sleepy Hollow & Country Club Commons Sanitary Sewer Request

Mr. Barrick,

Thank you for requesting public sewer service for the proposed Sleepy Hollow and Country Club Commons developments. We have reviewed both requests in detail. Please find attached to this email, a combined letter addressing each request. In addition I have included downstream capacity studies and alternative options to providing service to this location. Please review and let us know what questions or concerns you might have. Kristen and I will be happy to discuss at your convenience.

Kindest Regards,

Travis Markley
Charles Town Utility Board
Engineering Technician
304-725-2316 office

Confidentiality Notice: The information contained in this e-mail and any attached documents may be confidential or legally privileged. It is intended exclusively for the individual or entity to which it is addressed. This communication may contain information that is proprietary, privileged or confidential or otherwise legally exempt from disclosure. If you are not the named addressee, you are not authorized to read, print, retain, copy or disseminate this message or any part of it. If you have received this message in error, please notify the sender immediately by e-mail and delete all copies of the message. Please note that the sender accepts no responsibility for viruses and it is your responsibility to scan this e-mail and attachments (if any). No contracts may be concluded on behalf of the sender by means of electronic communications unless expressly stated to the contrary.

THIRD AMENDMENT TO LEASE AGREEMENT

Site Name/Location: **The City of Charles Town – WV-002 Charles Town Road**
1376 Charles Town Road, Jefferson County, West Virginia

THIS THIRD AMENDMENT TO LEASE AGREEMENT (the "**Third Amendment**"), dated as of the latter of the signature dates below, is by and between the CITY OF CHARLES TOWN ("**Landlord**"), a Municipal Corporation, having a mailing address at 101 E. Washington Street, Charles Town, WV 25414 and New Cingular Wireless PCS, LLC, a Delaware limited liability company, having a mailing address at 1025 Lenox Park Blvd NE, Third Floor,, Atlanta, Georgia 30319 hereinafter referred to as ("**Tenant**").

WHEREAS, Landlord and Tenant are parties to that Lease Agreement ("**Agreement**") dated February 14th, 2003, whereby Landlord leased to Tenant certain Premises, therein described, that are a portion of the Property located at the RT. 9 and RT. 340 Intersection, and also known as 1376 Charles Town Road, Charles Town, WV 25414; and

WHEREAS, Landlord and Tenant are parties to that First Amendment to the Lease Agreement (the "**Amendment**") dated August 16, 2007, whereby Landlord and Tenant consented to extend the term of the Agreement and modify the Rent and payment terms; and

WHEREAS, Landlord and Tenant are parties to that Second Amendment to the Lease Agreement (the "**Second Amendment**") dated July 26, 2018, whereby Landlord and Tenant consented to allow the replacement and addition of certain equipment on the Property and within the Premises; and

WHEREAS, Tenant desires to add an emergency back-up power generator and ancillary equipment directly related to such generator on the Property and within the Premises in accordance with the terms hereof; and

WHEREAS, Landlord and Tenant desire to adjust the rent in conjunction with the modifications to the Agreement contained herein; and

NOW THEREFORE, in consideration of the foregoing and other good and valuable consideration, the receipt and sufficiency of which are hereby acknowledged, Landlord and Tenant agree as follows:

1. **Exhibit 1-A** to the Agreement is hereby deleted in its entirety, and a new **Exhibit 1-B,** the Co-Lo Application of Tenant and the Landlord Approved Construction Drawings are hereby incorporated into the Agreement in lieu thereof.

2. **Permitted Use.** Paragraph 2 of the Agreement is hereby deleted in its entirety and the following Paragraph 2 is hereby incorporated into this Third Amendment

Permitted Use. Tenant may use the Premises for the transmission and reception of communications signals and the installation, construction, maintenance, operation, repair, replacement and upgrade of its communication facilities and related equipment, as identified on **Exhibit 1-B** attached hereto, which includes the co-location application and construction drawings of Tenant (collectively, the "Permitted Use"). Tenant shall have the right to install, repair, maintain, operate and replace at the locations identified in Exhibit 1-B attached hereto, from time to time, up to one (1) emergency back-up power generator and related ancillary equipment as outlined in Exhibit 1-B attached hereto. Should the emergency back-up power generator require modifications in order to support Tenant's future use, Landlord and Tenant agree to negotiate in good faith concerning an increase in Rent and/or the capital costs associated with such upgrades to support such changes in Tenants operations. Tenant agrees to comply with all applicable government laws, rules, statues and regulations, relating to its use of the Communications Facility on and within the Premises and on the Property. All other changes for any new, or additional equipment must be preapproved by Landlord, in its sole discretion

3. **Rent.** Paragraph 4 of the Agreement is hereby deleted in its entirety and the following Paragraph 4 is hereby incorporated into this Third Amendment:

Rent. Commencing on the date that Lessee commences construction of the modifications set forth in this Amendment, but in no event later that January 1, 2022, Rent shall be increased by Two Hundred Seventy-Five and No/100 Dollars ($275.00) per month. The new total Rent will become Two Thousand Three Hundred Seventy-One Dollars and 00/100 Dollars ($2,371.00) per month. Each Fee Payment shall bear the site designation of WV-002 - Charles Town Road Water Tank.

Commencing on the date of the commencement of the next Extension Term of October 1, 2022 (the "Extension Term"), the monthly rent shall be adjusted, and effective on each anniversary thereafter of the Commencement Date of October 1, to an amount equal to one hundred two percent (102%) of the monthly rent in effect immediately prior to such adjustment date. In the event this Lease continues beyond the expiration of the extension terms provided herein and continues on a month-to-month basis (the "Holdover Term") as provided for in Paragraph 3, the monthly rent payment shall be increased by 2% at the beginning of the month-to-month term and increase by 2% per annum on each twelve month anniversary of the commencement of the month-to-month tenancy. Tenant and Landlord shall have the right to terminate this Agreement at any time with six (6) months prior written notice upon the commencement of the month-to-month tenancy.

4. **Notices**. Paragraph 18 of the Agreement is hereby deleted in its entirety and replaced with the following:

"NOTICES. All notices, requests, demands and Antenna hereunder will be given by first class certified or registered mail, return receipt requested, or by a nationally recognized overnight courier, postage prepaid, to be effective when properly sent and received, refused or returned undelivered. Notices will be addressed to the parties as follows:

If to Tenant:

New Cingular Wireless PCS, LLC
c/o AT&T Network Real Estate Administration
AT&T Cell Site Number: 36212
AT&T Cell Site Name: Charles Town South Water Tank
AT&T Fixed Asset Number: 10106306
1025 Lenox Park Blvd NE
3rd Floor
Atlanta, GA 30319

With a required copy of the notice sent to the address above to AT&T Legal at:

New Cingular Wireless PCS, LLC
Attn: AT&T Legal Department
AT&T Cell Site Number: 36212
AT&T Cell Site Name: Charles Town South Water Tank
AT&T Fixed Asset Number: 10106306
208 S. Akard Street
Dallas, Texas, 75202-4206

A copy sent to the Legal Department is an administrative step which alone does not constitute legal notice.

And as to Landlord:

City of Charles Town
101 East Washington Street
Charles Town, WV 25414
WV-002 – Charles Town Road

Either party hereto may change the place for the giving of notice to it by thirty (30) days prior written notice to the other as provided herein.

5. **Other Terms and Conditions Remain.** In the event of any inconsistencies between the Agreement, the First Amendment, the Second Amendment and this Third Amendment, the terms of this Third Amendment shall control. Except as expressly set forth in this Third Amendment, the Agreement otherwise is unmodified and remains in full force and effect. Each reference in the Agreement to itself shall be deemed also to refer to this Third Amendment.

6. This Amendment may be executed in multiple counterparts, each of which, when executed, shall be deemed an original instrument, but all of which taken together shall constitute one and the same agreement.

[SIGNATURES APPEAR ON NEXT PAGE]

IN WITNESS WHEREOF, the parties have caused their properly authorized representatives to execute and seal this Second Amendment on the dates set forth below.

"**LANDLORD**"

The City of Charles Town
A Municipal Corporation

By: _____
Name: _____
Title: _____
Date: _____

"**TENANT**"

New Cingular Wireless PCS, LLC
By: AT&T Mobility Corporation
Its: Manager

By: _____
Name: _____
Title: _____
Date: _____

[ACKNOWLEDGEMENTS APPEAR ON NEXT PAGE]

LANDLORD ACKNOWLEDGEMENT

STATE OF WEST VIRGINIA

COUNTY OF JEFFERSON

On this the _____ day of _____, 2022, before me, a Notary Public, personally appeared _____ _____, who acknowledged himself/herself/themselves to be the _____of City of Charles Town, a municipality, and that he/she/they, as such _____, being authorized so to do, executed the foregoing instrument for the purposes therein contained, by signing the name of the corporation by himself/herself/themselves as _____.

In witness whereof I hereunto set my hand and official seal.

_____

NOTARY PUBLIC

Print Name: _____

My Commission Expires:_____

TENANT ACKNOWLEDGEMENT

STATE OF _____

COUNTY OF _____

On this the _____ day of _____, ____, before me, a Notary Public, personally appeared _____ _____, who acknowledged himself/herself/themselves to be the _____of _____, a limited liability company, and that he/she/they, as such _____, being authorized so to do, executed the foregoing instrument for the purposes therein contained, by signing the name of the limited liability company by himself/herself/themselves as _____ _____.

In witness whereof I hereunto set my hand and official seal.

_____

NOTARY PUBLIC

Print Name: _____

My Commission Expires:_____

EXHIBIT 1-B

CO-LOCATION APPLICATION OF TENANT

[See Attached Co-location Application of Tenant]

☐ NEW LEASE ☑ AMENDMENT TO EXISTING LEASE ☐ ANCHOR TENANT ☐ RECONTRACT

INTERNAL USE ONLY	
APP VERSION #	1
LEASE #	1
AMENDMENT #	3

PLEASE RETURN THIS APPLICATION VIA EMAIL TO:

Wireless Networks Group, Inc.
1011 Holden Road
Frederick, Maryland 21701-3437
Attn: Michael Hofe

E-Mail: mhofe@wirelessnetworksgroup.com

Phone: 301-667-0001

Charles Town Site Number:	**WV-002**
Charles Town Site Name:	**Charles Town Road**
Application Date:	11/17/2021
Revision Dates:	
OPS Approval:	2/1/2022

APPLICANT / CARRIER INFORMATION

Carrier Name:	**AT&T**	**Contact Name:**	**Michael Bowden**
Carrier Site Number:	**10106306**	**Contact Number:**	**240-529-2791**
Carrier Site Name:	**Charles Town Water Tank**	**Contact Fax:**	**N/A**
Carrier Legal Entity Name:	New Cingular Wireless PCS, LLC	**Contact Address:**	2586 Industry Ln., Suite 100 Norristown, PA 19403
State of registration:			
Type of entity (LP, LLC, Corp) d/b/a (If applicable)	LLC		
Notice Address for Lease:	Attn: TAG -LA Re: Cell Site # 36212 Cell Cite Name: Charles Town Water Tank Fixed Asset: 10106306 1025 Lenox Park Blvd NE 3rd Floor Atlanta, GA 30319	**Contact E-mail:**	Michael.Bowden@gdit.com
With copies to:	Attn: TAG -LA Re: Cell Site # 36212 Cell Cite Name: Charles Town Water Tank Fixed Asset: 10106306 208 S. Akard Street Dallas, Texas 75202-4206	**Additional E-mail:**	
Carrier Invoice Address:		**Desired Install Date:**	4/29/2022
Carrier Invoice Contact - Name, Title, Phone No.		**Carrier NOC#**	800-225-3790

ADDITIONAL CONTACT INFORMATION

Leasing Contact Name/Number:	Michael Bowden/240-529-2791
RF Contact Name/Number:	N/A
Construction Contact Name/Number:	Will Hochman/267-201-3062
Emergency Contact Name/Number:	NOC/800-225-3790

SITE INFORMATION

Latitude:	**39.273867**	**N**	**Existing Structure Type:**	**Water Tank**
Longitude:	**-77.849578**	**W**	**Existing Structure Height:**	**93'**
Site Address:	**1376 Charles Town Road, Charles Town, WV 25414**			

FREQUENCY/TECHNOLOGY INFORMATION

Type of Technology for all equipment (i.e., 3G, LTE, CMDA, MW, WiFi, TV, etc.)		LTE
TX Frequency (MHz)	Licensed	790-960
RX Frequency (MHz)	Licensed	1710-2180
Tenants using an unlicensed band must provide exact Frequency Channels and Call Sign(s) to be utilized. (Providing the band range only will not be accepted.)		

PLEASE PROVIDE A BRIEF DESCRIPTION OF GENERAL SCOPE OF WORK

Install 4 ft. x 10 ft. concrete pad and new 30 kw diesel generator.

EXISTING EQUIPMENT Applicant's Existing Equipment Configuration and Specifications										
Equipment Type (ex: panel, TMA, RRU)	**RAD (feet)**	**Mount Height (feet)**	**Mount Type**	**Equip Qty**	**Equipment Manufacturer**	**Equipment Model #**	**Equip Dim (HxWxD) (ft or in)**	**Equip Weight (lbs)**	**Az**	**Remain**
panel	97		Pipe Mount	1	Kathrein	80010122			340	Yes
panel	97		Pipe Mount	1	Andrew	SBNH-1D65C			20	Yes
panel	97		Pipe Mount	1	Commscope	NNH4-65C-R6			20	Yes
panel	97		Pipe Mount	1	Kathrein	80010122			120	Yes
panel	97		Pipe Mount	1	Andrew	SBNH-1D65C			150	Yes
panel	97		Pipe Mount	1	Commscope	NNH4-65C-R6			150	Yes
panel	97		Pipe Mount	1	Kathrein	80010122			240	Yes
panel	97		Pipe Mount	1	Andrew	SBNH-1D65A			240	Yes
panel	97		Pipe Mount	1	Commscope	NNH4-65C-R6			270	Yes
RRH	97		Pipe Mount	3	Alcatel Lucent	2x40W-07L				Yes
RRH	97		Pipe Mount	3	Nokia	Flexi 4T4R B14 160W				Yes
RRH	97		Pipe Mount	3	Alcatel lucent	B25 RRH4X30-4R				Yes
RRH	97		Pipe Mount	3	Alcatel Lucent	B66A-RRH4x45				Yes
TMA / Raycap			Pipe Mount	6 ea	Powerwave / Raycap	LGP21401 / DC2-48-60-0-9E				Yes

EXISTING LINES Applicant's Existing Lines and Specifications					
Line Type	**Line Size (Inches)**	**Total # of Lines**	**Coax interior or exterior (for monopoles)**	**Remain**	**Comments:**
Coax	1-5/8"	12		Yes	
Fiber	3/8"	2		Yes	
DC Power	13/16"	4		Yes	

PROPOSED EQUIPMENT Applicant's Proposed Equipment Configuration and Specifications									
Equipment Type (ex: panel, TMA, RRU, ice shields)	RAD (feet)	Mount Height (feet)	Mount Type	Equip Qty	Equipment Manufacturer	Equipment Model #	Equip Dim (HxWxD) (ft or in)	Equip Weight (lbs)	Azimuth

PROPOSED LINES Applicant's Proposed Lines and Specifications				
Line Type	Line Size (Inches)	Total # of Lines	Coax interior or exterior (for monopoles)	Comments:
Coax				
RET Home Run Cable				
Fiber				
DC Power				

PROPOSED FINAL CONFIGURATION TOTALS	
EQUIPMENT TYPE	TOTAL
Panel Antennas	9
Omni/Whip Antennas	
RRU	12
TMA	6
Diplexer / Triplexer	
Bias T	
Surge Suppressor	6
MW Dish	
Ice Shield	
ODU	
Filter	
Combiner	
Junction Box	
RET	
Equipment Cabinets	
Other (Please specify)	
Other (Please specify)	
Other (Please specify)	
Other (Please specify)	
Other (Please specify)	

PROPOSED FINAL CONFIGURATION TOTALS	
LINE TYPE	TOTAL
Coax	12
Hybrid	2
CAT5	
DC/Power	4
RET	
Fiber	

ADDITIONAL EQUIPMENT INFORMATION
• RRUs, TMAs and ODUs are required to be installed directly behind the antennas / MW dish. Otherwise there will be an additional charge. • All equipment lines are required to be installed inside the tower when space is available. Carriers will be charged an additional $25.00 per line per month if equipment lines are installed on the outside of the tower even though there is available space inside the tower. Charles Town must approve any installation of lines on the outside of the tower. • All tenant equipment must be installed within one continuous 10 ft vertical envelope. Exceeding this vertical space will be subject to additional rent.

GROUND / INTERIOR SPACE REQUIREMENTS							
Total Ground / Interior Area Dimensions: **L' x W' = Total Square Feet Required**	4	X	10	(Including all Equipment (i.e., Shelter, Equipment Platform or Pad, Generator Pad, Generator Fuel Tank Pad, Antenna Sleds, etc. – provide details below)			
Cabinet Area Dimensions (Pad/Platform)	7	X	17	Cabinet Installation Type	Ground Pad		
Shelter Pad Dimensions		X		Shelter Manufacturer			
Rooftop Antenna Total Area Required		X		Antenna Sled Dimensions (per sector)		X	Antenna Wall Mount Dimensions (per sector)		X	

EQUIPMENT CABINET REQUIREMENTS (Required for rooftops or Charles Town interior space)					
Number of Cabinets Required		Cabinet Dimensions (L' x W' x H')		Manufacturer:	
Number of Cabinets Required		Cabinet Dimensions (L' x W' x H')		Manufacturer:	
Number of Cabinets Required		Cabinet Dimensions (L' x W' x H')		Manufacturer:	
Equipment Cabinet Comments					

GENERATOR REQUIREMENTS					
Generator Required?:	New	Generator Fuel Type	Diesel	Generator Size	30 kW
Generator Pad Dimensions	4' x 10'			Generator Manufacturer	Generac
Generator Fuel Tank Pad Dimensions	Belly Tank under Genset within 4' x 10'			Fuel Tank Manufacturer	

AC POWER REQUIREMENTS			
Meter Type	Existing Tenant Meter	Estimated Monthly Utility Usage Amount	
Voltage		Total Amperage	

FIBER / BACKHAUL					
Fiber Installation Status	Existing (No Change)	Fiber Provider			
Cable Type		Number of Points of Entry		Conduit/Riser Size (in inches)	

STRUCTURAL ANALYSIS DETAILS			
Structural Hardcopies Required?	No	If wet seals required, please provide address:	

ADDITIONAL COMMENTS
7' x 17' Concrete equipment pad is already existing. Adding new 4' x 10' generator pad.

EXHIBIT 1-B (con't)

LANDLORD APPROVED CONSTRUCTION DRAWINGS

[See Attached Landlord Approved Construction Drawings]

© Copyright 2021 - Ramaker & Associates, Inc. - All Rights Reserved
C:\Users\rguerrero\appdata\local\temp\AcPublish_3096\52754_10106306_CHARLESTOWN WATER TANK_GENERATOR ATT CDs.dwg Printed by: rguerrero on Nov 30, 2021 - 8:42am
DRAWN BY: TRB CHECKED BY: MJR

SCOPE OF WORK DETAILS

GENERAL:

- NEW GENERAC DIESEL GENERATOR PROVIDED BY GENERAL DYNAMICS & INSTALLED BY GENERAL CONTRACTOR. SEE E-4.
- NEW 4'-0" X 10'-0" CONCRETE PAD PROVIDED & INSTALLED BY GENERAL CONTRACTOR (AS REQUIRED) SEE S-1
- NEW GENERAC AUTOMATIC TRANSFER SWITCH PROVIDED BY GENERAL DYNAMICS & INSTALLED BY CONTRACTOR (AS REQUIRED) SEE E-3 & E-5.
- CONTRACTOR TO VERIFY ALL EXISTING UTILITIES PRIOR TO CONSTRUCTION
- CONTRACTOR SHALL RESTORE & REPAIR ANY DAMAGED AREAS CAUSED BY CONSTRUCTION TO ORIGINAL OR BETTER CONDITION

CONDUITS:

- INSTALL PULL STRING IN EACH CONDUIT
- (1) NEW 2" AND (1) NEW 1" ELECTRICAL CONDUITS WITH CONDUCTORS TO RUN FROM NEW GENERATOR TO NEW ATS. CONDUIT PROVIDED AND INSTALLED BY GENERAL CONTRACTOR. SEE E-1, E-2 & E-3.
- (1) NEW 1" ELECTRICAL CONDUIT WITH CONDUCTORS TO RUN FROM NEW GENERATOR TO AC PANEL. CONDUIT PROVIDED & INSTALLED BY GENERAL CONTRACTOR. SEE E-1, E-2 & E-3.
- (1) NEW 1" ALARM CONDUIT & CABLING PROVIDED & INSTALLED BY GENERAL CONTRACTOR. SEE E-1, E-2 & E-3.

GROUNDING:

- NEW EXOTHERMIC CONNECTION FROM EXISTING GROUND RING TO NEW MECHANICAL CONNECTION AT GENERATOR CHASSIS. GENERAL CONTRACTOR TO VERIFY LOCATION IN FIELD. LOCATE GROUND RODS NO MORE THAN 8'-0" APART.

NORTH

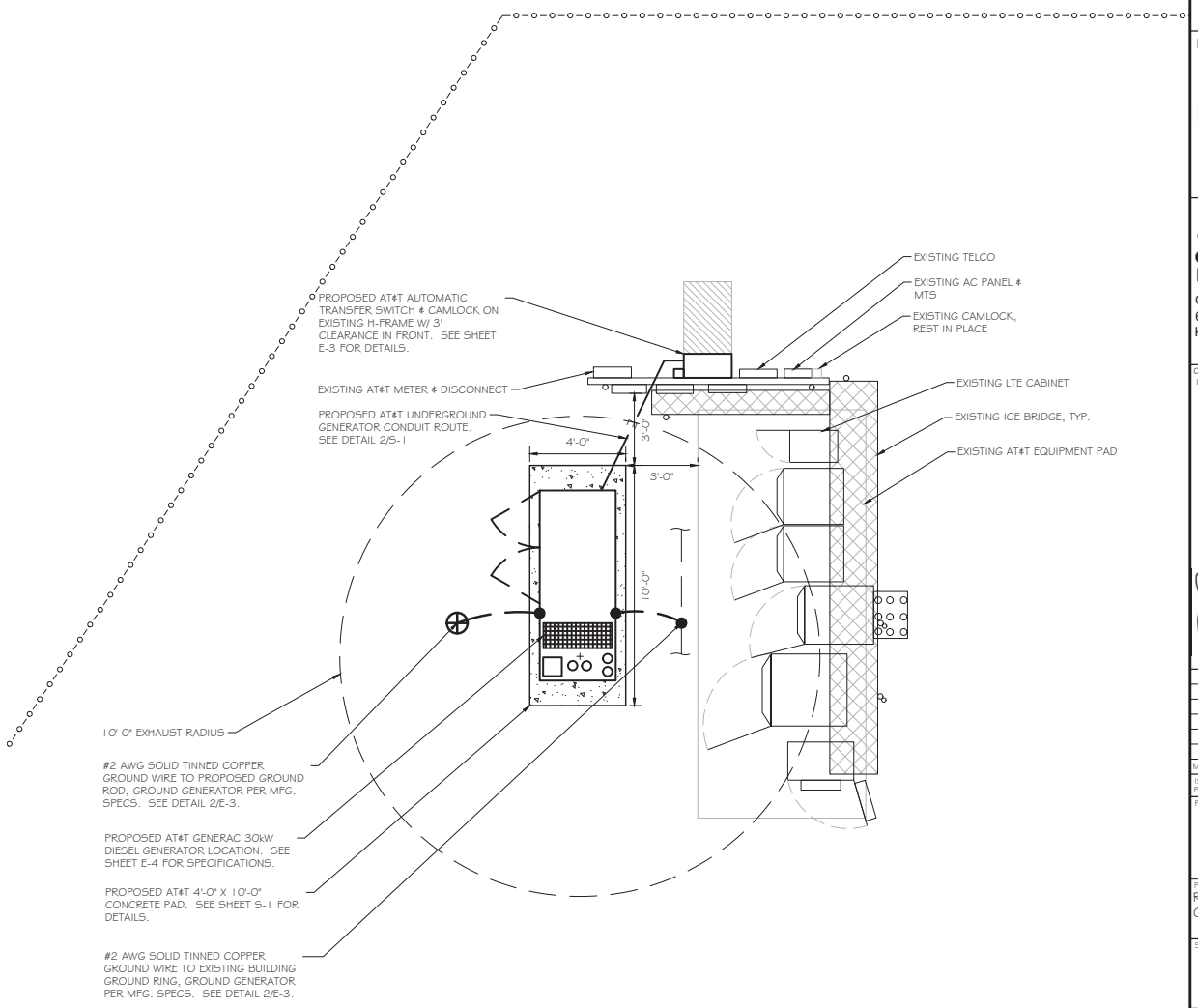

SITE PLAN
SCALE: 1" = 5'

RAMAKER
employee-owned
(608) 643-4100 www.ramaker.com

PREPARED FOR:

at&t Mobility

CONSULTANT:
GENERAL DYNAMICS
Information Technology, Inc.
GENERAL DYNAMICS
661 MOORE RD STE 110
KING OF PRUSSIA, PA 19406

Certification & Seal:
I hereby certify that this plan, specification, or report was prepared by me or under my direct supervision and that I am a duly Licensed Professional Engineer under the laws of the State of West Virginia.

JAMES R. SKOWRONSKI REGISTERED 13590 STATE OF WEST VIRGINIA PROFESSIONAL ENGINEER

MARK	DATE	DESCRIPTION

ISSUE PHASE: FINAL
DATE ISSUED: 11/30/2021

PROJECT TITLE:
CHARLESTOWN WATER TANK
FA ID # 10106306

PROJECT INFORMATION:
ROUTE 9 AND 30
CHARLES TOWN, WV 25414

SHEET TITLE:
SITE PLAN & EQUIPMENT LAYOUT

0 2.5' 5' 10'

11" x 17" - 1" = 5'
22" x 34" - 1" = 2.5'

PROJECT NUMBER: 52754
SHEET NUMBER: A-2

This document contains confidential or proprietary information of Ramaker & Associates, Inc. Neither this document nor the information herein is to be reproduced, distributed, used or disclosed either in whole or in part except as authorized by Ramaker and Associates, Inc.

© Copyright 2021 - Ramaker & Associates, Inc. - All Rights Reserved
DRAWN BY: TRB CHECKED BY: MJR
Printed by: rguerrero on Feb 02, 2022 - 2:17pm
I:\52700\52754\CAD\52754_10106306_CHARLESTOWN WATER TANK_GENERATOR ATT CDs.dwg

at&t Mobility

SITE NAME: CHARLESTOWN WATER TANK
FA LOCATION CODE: 10106306

GENERATOR PROJECT
30KW GENERAC DIESEL GENERATOR
200A GENERAC ATS

1376 CHARLES TOWN RD
CHARLES TOWN, WV 25414

VICINITY MAP

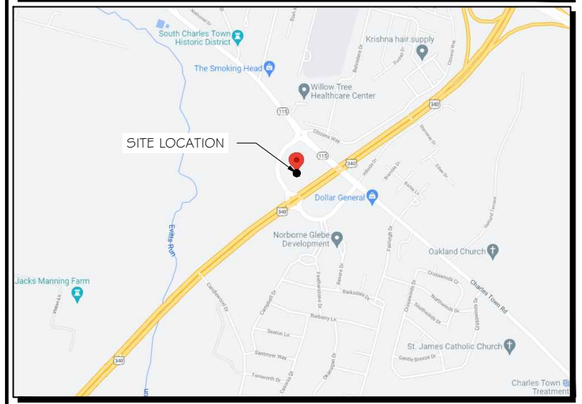

SCOPE OF WORK

ADD STANDBY GENERATOR, ASSOCIATED CONCRETE PAD, AND UTILITY EQUIPMENT TO EXISTING AT&T EQUIPMENT AREA. THERE WILL BE NO CHANGE IN THE SIZE OR HEIGHT OF THE TOWER OR ANTENNAS.

MEMBER ONE CALL SYSTEMS INTERNATIONAL

TO OBTAIN LOCATION OF PARTICIPANTS' UNDERGROUND FACILITIES BEFORE YOU DIG IN WEST VIRGINIA

MISS UTILITY OF WEST VIRGINIA
811 OR 1-800-245-4848

WEST VIRGINIA LAW SECTION XIV: WEST VIRGINIA CHAPTER 24-C REQUIRES MIN. 2 WORKING DAYS NOTICE BEFORE YOU EXCAVATE.

APPLICABLE BUILDING CODE & STANDARDS

ALL WORK AND MATERIALS SHALL BE PERFORMED AND INSTALLED IN ACCORDANCE WITH THE CURRENT EDITION OF THE FOLLOWING CODES AS ADOPTED BY THE GOVERNING LOCAL AUTHORITIES. NOTHING IN THESE PLANS ARE TO BE CONSTRUCTED TO PERMIT WORK NOT CONFORMING TO THESE CODES:

1. INTERNATIONAL BUILDING CODE 2015

2. NATIONAL ELECTRIC CODE 2017

3. AMERICAN CONCRETE INSTITUTE (ACI) 318, BUILDING CODE REQUIREMENTS FOR STRUCTURAL CONCRETE

4. AMERICAN INSTITUTE OF STEEL CONSTRUCTION (AISC), MANUAL OF STEEL CONSTRUCTION

5. TELECOMMUNICATIONS INDUSTRY ASSOCIATION (TIA) 222-G, STRUCTURAL STANDARDS FOR STEEL TOWER AND ANTENNA SUPPORTING STRUCTURES

6. TIA 607, COMMERCIAL BUILDING GROUNDING AND BONDING REQUIREMENTS FOR TELECOMMUNICATIONS

AERIAL VIEW OF SITE

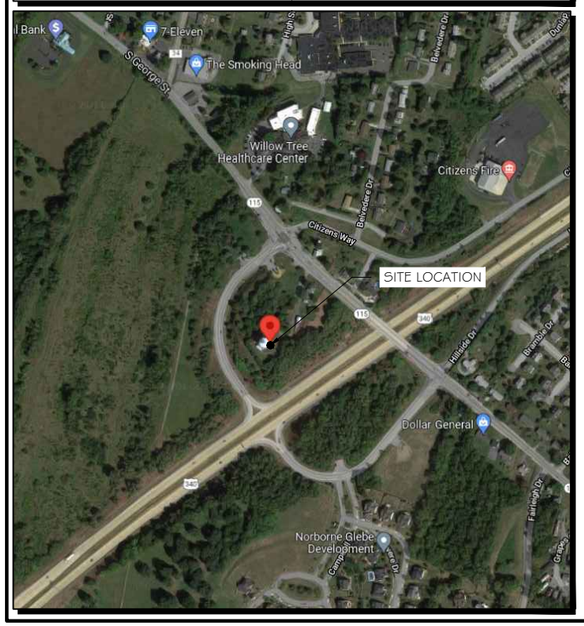

PROJECT INFORMATION

PROJECT MANAGER:

JOE JARVIS
MARKET LEAD
GENERAL DYNAMICS WIRELESS SERVICES
661 MOORE RD STE 110
KING OF PRUSSIA, PA 19406
EMAIL: joseph.jarvis@gdit.com

ENGINEER:

RAMAKER & ASSOCIATES, INC.
855 COMMUNITY DRIVE
SAUK CITY, WI 53583
PH.: (608) 643-4100
FAX: (608) 643-7999
CONTACT: TYLER BEATTY
EMAIL: tbeatty@ramaker.com

APPLICANT INFORMATION:
AT&T MOBILITY
7150 STANDARD DR
HANOVER, MD 21076

SITE DATA:
SITE NAME: CHARLESTOWN WATER TANK
FA NUMBER: 10106306

PROPERTY OWNER:
CITY OF CHARLES TOWN
101 E WASHINGTON ST.
CHARLES TOWN, WV 25414
CONTACT INFO:
MICHAEL HOFE
301-667-001

ADDRESS:
1376 CHARLES TOWN RD
CHARLES TOWN, WV 25414

COUNTY: JEFFERSON

LAT.: 39.2739°
LONG.: -77.8496°

GROUND ELEVATION: 544 FT AMSL

DO NOT SCALE DRAWINGS:
CONTRACTOR SHALL VERIFY ALL PLANS & EXISTING DIMENSIONS & CONDITIONS ON THE JOB SITE & SHALL IMMEDIATELY NOTIFY THE ENGINEER IN WRITING OF ANY DISCREPANCIES BEFORE PROCEEDING WITH THE WORK OR BE RESPONSIBLE FOR SAME.

THE INFORMATION CONTAINED IN THIS SET OF DOCUMENTS IS PROPRIETARY BY NATURE. ANY USE OR DISCLOSURE OTHER THAN THAT WHICH RELATES TO THE CLIENT IS STRICTLY PROHIBITED.

SHEET INDEX

GENERAL:

T-1 TITLE SHEET

NOTES:

N-1 GENERAL NOTES

SITE:

A-1 SITE PLAN
A-2 SITE PLAN & EQUIPMENT LAYOUT
S-1 FOUNDATION DETAILS

ELECTRICAL & GROUNDING:

E-1 WIRING DETAILS
E-2 PANEL AND PENETRATION DETAILS
E-3 ATS, CONDUIT & GROUND ROD DETAILS
E-4 GENERAC GENERATOR SPECIFICATIONS
E-4.1 GENERAC GENERATOR SPECIFICATIONS
E-4.2 GENERAC GENERATOR SPECIFICATIONS
E-5 GENERAC ATS SPECIFICATIONS
E-5.1 GENERAC ATS SPECIFICATIONS

SIGNATURE BLOCK

AT&T MGR. — DATE

GENERAL DYNAMICS CONSTRUCTION MGR. — DATE

SITE ACQUISITION — DATE

PROPERTY OWNER — 2/5/2022 DATE

RAMAKER
employee-owned
(608) 643-4100 www.ramaker.com

PREPARED FOR:
at&t Mobility

CONSULTANT:
GENERAL DYNAMICS
Information Technology, Inc.
GENERAL DYNAMICS
661 MOORE RD STE 110
KING OF PRUSSIA, PA 19406

Certification & Seal:
I hereby certify that this plan, specification, or report was prepared by me or under my direct supervision and that I am a duly Licensed Professional Engineer under the laws of the State of West Virginia.

JAMES R. SKOWRONSKI
REGISTERED
13590
STATE OF
WEST VIRGINIA
PROFESSIONAL ENGINEER
2/2/2022

MARK	DATE	DESCRIPTION
1	02/02/22	REVISED CDs

ISSUE PHASE: FINAL — DATE ISSUED: 11/30/2021

PROJECT TITLE:
CHARLESTOWN WATER TANK
FA ID # 10106306

PROJECT INFORMATION:
1376 CHARLES TOWN RD
CHARLES TOWN, WV 25414

SHEET TITLE:
TITLE SHEET

SCALE: NONE

PROJECT NUMBER: 52754
SHEET NUMBER: T-1

This document contains confidential or proprietary information of Ramaker & Associates, Inc. Neither this document nor the information herein is to be reproduced, distributed, used or disclosed either in whole or in part except as authorized by Ramaker and Associates, Inc.

© Copyright 2021 - Ramaker & Associates, Inc. - All Rights Reserved
DRAWN BY: TRB CHECKED BY: MJR

I:\52700\52754\CAD\52754_10106306_CHARLESTOWN WATER TANK_GENERATOR ATT CDs.dwg Printed by: rguerrero on Feb 02, 2022 - 2:17pm

NOTES TO SUBCONTRACTOR:

1. THE GENERAL SUBCONTRACTOR MUST VERIFY ALL DIMENSIONS, CONDITIONS AND ELEVATIONS BEFORE PROCEEDING WITH THE WORK. ALL WORK SHALL BE PERFORMED IN A WORKMANLIKE MANNER IN ACCORDANCE WITH ACCEPTED CONSTRUCTION PRACTICES.

2. IT IS THE INTENTION OF THESE DRAWINGS TO SHOW THE COMPLETED INSTALLATION. THE SUBCONTRACTOR SHALL BE RESPONSIBLE FOR ALL TEMPORARY BRACING, SHORING, TIES, FORM WORK, ETC. IN ACCORDANCE WITH ALL NATIONAL, STATE, AND LOCAL ORDINANCES, TO SAFELY EXECUTE ALL WORK AND SHALL BE RESPONSIBLE FOR SAME. ALL WORK SHALL BE IN ACCORDANCE WITH LOCAL CODES.

3. THE SUBCONTRACTOR SHALL USE ADEQUATE NUMBER OF SKILLED WORKMAN WHO ARE THOROUGHLY TRAINED AND EXPERIENCED IN THE NECESSARY CRAFTS AND WHO ARE COMPLETELY FAMILIAR WITH THE SPECIFIED REQUIREMENTS AND METHOD NEEDED FOR PROPER PERFORMANCE OF THE WORK.

4. CONSTRUCTION SUBCONTRACTOR AGREES THAT IN ACCORDANCE WITH GENERALLY ACCEPTED CONSTRUCTION PRACTICES, CONSTRUCTION SUBCONTRACTOR WILL BE REQUIRED TO ASSUME SOLE AND COMPLETE RESPONSIBILITY FOR JOB SITE CONDITIONS DURING THE COURSE OF CONSTRUCTION OF THE PROJECT, INCLUDING THE SAFETY OF ALL PERSONS AND PROPERTY, THAT THIS REQUIREMENT SHALL BE MADE TO APPLY CONTINUOUSLY AND NOT BE LIMITED TO NORMAL WORKING HOURS AND CONSTRUCTION SUBCONTRACTOR FURTHER AGREES TO INDEMNIFY AND HOLD DESIGN ENGINEER HARMLESS FROM ANY AND ALL LIABILITY, REAL OR ALLEGED, IN CONNECTION WITH PERFORMANCE OF WORK ON THIS PROJECT.

5. SITE GROUNDING SHALL COMPLY WITH AT&T WIRELESS SERVICES TECHNICAL SPECIFICATIONS FOR FACILITY GROUNDING FOR CELL SITE STANDARDS, LATEST EDITION, AND COMPLY WITH AT&T TOWERS GROUNDING CHECKLIST, LATEST VERSION. WHEN NATIONAL AND LOCAL GROUNDING CODES ARE MORE STRINGENT THEY SHALL GOVERN. GROUNDING SHALL BE COMPLETED BEFORE ERECTION OF TOWER.

6. ALL WORK SHALL COMPLY WITH OSHA AND STATE SAFETY REQUIREMENTS. PROCEDURES FOR THE PROTECTION OF EXCAVATIONS, EXISTING CONSTRUCTION AND UTILITIES SHALL BE ESTABLISHED PRIOR TO FOUNDATION INSTALLATION, IF TEMPORARY LIGHTING AND MARKING IS REQUIRED BY THE FEDERAL AVIATION ADMINISTRATION (FAA), IT IS THE SUBCONTRACTOR'S RESPONSIBILITY TO MAINTAIN THE NECESSARY LIGHTS AND NOTIFY THE PROPER AUTHORITIES IN THE EVENT OF A PROBLEM.

7. ALL WORK SHALL BE ACCOMPLISHED IN ACCORDANCE WITH ALL LOCAL, STATE, AND FEDERAL CODES OR ORDINANCES. THE MOST STRINGENT CODE WILL APPLY IN THE CASE OF DISCREPANCIES OR DIFFERENCES IN THE CODE REQUIREMENTS.

8. ANY DAMAGE TO THE ADJACENT PROPERTIES WILL BE CORRECTED AT THE SUBCONTRACTOR'S EXPENSE TO THE SATISFACTION OF THE LANDOWNER AND THE ENGINEER.

9. THE COMPLETE BID PACKAGE INCLUDES THESE CONSTRUCTION DRAWINGS ALONG WITH THE SPECIFICATIONS. SUBCONTRACTOR IS RESPONSIBLE FOR REVIEW OF TOTAL BID PACKAGE PRIOR TO BID SUBMITTAL..

10. SUBCONTRACTOR SHALL VERIFY LOCATION OF ALL EXISTING UTILITIES WITHIN CONSTRUCTION LIMITS PRIOR TO CONSTRUCTION.

11. THE SUBCONTRACTOR IS RESPONSIBLE FOR MAINTAINING POSITIVE DRAINAGE ON THE SITE AT ALL TIMES. SILT AND EROSION CONTROL SHALL BE MAINTAINED ON THE DOWNSTREAM SIDE OF THE SITE AT ALL TIMES. ANY DAMAGE TO ADJACENT PROPERTIES WILL BE CORRECTED AT THE SUBCONTRACTOR'S EXPENSE.

12. CLEARING OF TREES AND VEGETATION ON THE SITE SHOULD BE HELD TO A MINIMUM. ONLY THE TREES NECESSARY FOR CONSTRUCTION OF THE FACILITIES SHALL BE REMOVED. ANY DAMAGE TO THE PROPERTY OUTSIDE THE LEASED PROPERTY SHALL BE REPAIRED BY THE SUBCONTRACTOR.

13. ALL SUITABLE BORROW MATERIAL FOR BACK FILL OF THE SITE SHALL BE INCLUDED IN THE BID. EXCESS TOPSOIL AND UNSUITABLE MATERIAL SHALL BE DISPOSED OF OFF SITE AT LOCATIONS APPROVED BY GOVERNING AGENCIES PRIOR TO DISPOSAL.

14. SEEDING AND MULCHING OF THE SITE WILL BE ACCOMPLISHED AS SOON AS POSSIBLE AFTER COMPLETION OF THE SITE DEVELOPMENT. THE SUBCONTRACTOR IS RESPONSIBLE FOR PROVIDING AND MAINTAIN AN ADEQUATE COVER OF VEGETATION OVER THE SITE FOR A ONE YEAR PERIOD.

15. PERMITS: THE SUBCONTRACTOR SHALL BE RESPONSIBLE FOR OBTAINING AND INCURRING THE COST OF ALL REQUIRED PERMITS, INSPECTIONS, CERTIFICATES, ETC.

16. RECORD DRAWINGS: MAINTAIN A RECORD OF ALL CHANGES, SUBSTITUTIONS BETWEEN WORK AS SPECIFIED AND INSTALLED. RECORD CHANGES ON A CLEAN SET OF CONTRACT DRAWINGS WHICH SHALL BE TURNED OVER TO THE CONSTRUCTION MANAGER UPON COMPLETION OF THE PROJECT.

17. THE PLANS SHOW SOME KNOWN SUBSURFACE STRUCTURES, ABOVE GROUND STRUCTURES AND/OR EXISTING UTILITIES BELIEVED TO BE IN THE WORKING AREA. IT IS THE RESPONSIBILITY OF THE SUBCONTRACTOR TO VERIFY ALL UTILITIES, PIPELINES AND OTHER STRUCTURES SHOWN OR NOT SHOWN ON THESE PLANS. THE SUBCONTRACTOR SHALL CONTACT THE LOCAL JURISDICTION'S DIGGER'S HOTLINE BEFORE DIGGING OR DRILLING. ANY DAMAGE TO EXISTING UTILITIES SHALL BE REPAIRED TO THE SATISFACTION OF THE OWNER AND ENGINEER AT THE SUBCONTRACTOR'S EXPENSE.

GENERAL NOTES:

1. THIS PROPOSAL IS FOR THE ADDITION OF A NEW GENERATOR ON A CONCRETE PAD TO AN EXISTING UNMANNED TELECOMMUNICATIONS FACILITY CONSISTING OF AN EQUIPMENT SHELTER AND TOWER.

2. THE PROPOSED FACILITY WILL BE UNMANNED AND DOES NOT REQUIRE POTABLE WATER OR SEWER SERVICE.

3. THE PROPOSED FACILITY IS UNMANNED AND IS NOT FOR HUMAN HABITAT. (NO HANDICAP ACCESS IS REQUIRED)

4. OCCUPANCY IS LIMITED TO PERIODIC MAINTENANCE AND INSPECTION, APPROXIMATELY 2 TIMES PER MONTH BY AT&T TECHNICIANS.

5. OUTDOOR STORAGE AND SOLID WASTE CONTAINERS ARE NOT PROPOSED.

6. ALL MATERIAL SHALL BE FURNISHED AND WORK SHALL BE PERFORMED IN ACCORDANCE WITH THE PROJECT SPECIFICATIONS.

7. SUBCONTRACTOR SHALL BE RESPONSIBLE FOR REPAIRING ANY DAMAGE CAUSED BY THE CONSTRUCTION OPERATION.

8. SUBCONTRACTOR SHALL BE RESPONSIBLE FOR OBTAINING ALL PERMITS AND INSPECTION REQUIRED FOR CONSTRUCTION.

9. SUBCONTRACTOR SHALL REMOVE ALL TRASH AND DEBRIS FROM THE SITE ON A DAILY BASIS.

ELECTRICAL NOTES:

A. GENERAL

1. COORDINATE LOCATION AND POWER REQUIREMENTS OF ALL EQUIPMENT WITH AT&T AND EQUIPMENT SUPPLIER PRIOR TO INSTALLATION.

2. COORDINATE LOCATION AND REQUIREMENTS FOR ELECTRICAL AND TELEPHONE SERVICES WITH THE PROPERTY REPRESENTATIVE, AT&T AND UTILITY COMPANIES. ROUTING OF CONDUITS MAY BE MODIFIED TO MEET SITE REQUIREMENTS. EXACT CONDUIT ROUTING TO BE DETERMINED IN THE FIELD.

3. ALL WIRING AND EQUIPMENT SHOWN ON ELECTRICAL SHEETS SHALL BE FURNISHED AND INSTALLED UNDER ELECTRICAL PORTION OF CONTRACT UNLESS OTHERWISE NOTED

4. UNINTERRUPTED ELECTRICAL SERVICE FOR EXISTING EQUIPMENT SHALL BE MAINTAINED DURING THE INSTALLATION OF THE WORK DESCRIBED UNDER THESE DOCUMENTS. TEMPORARY EQUIPMENT, CABLES AND WHATEVER ELSE IS NECESSARY SHALL BE PROVIDED AS REQUIRED TO MAINTAIN ELECTRICAL SERVICE. TEMPORARY SERVICE FACILITIES, IF REQUIRED AT ANY TIME, SHALL NOT BE DISCONNECTED OR REMOVED UNTIL NEW SERVICE EQUIPMENT IS IN PROPER OPERATION. IF ANY SERVICE OR SYSTEM MUST BE INTERRUPTED, THE CONTRACTOR SHALL REQUEST PERMISSION IN WRITING STATING THE DATE, TIME, ETC. THE SERVICE WILL BE INTERRUPTED AND THE AREAS AFFECTED. THIS REQUEST SHALL BE MADE IN SUFFICIENT TIME FOR PROPER ARRANGEMENTS TO BE MADE. WRITTEN PERMISSION SHALL BE OBTAINED FROM THE OWNER BEFORE INTERRUPTING ELECTRICAL SERVICE.

5. COORDINATE NEW WORK WITH OTHER TRADES AND VERIFY EXISTING CONDITIONS TO AVOID INTERFERENCE. IN CASE OF INTERFERENCE, AT&T'S REPRESENTATIVE WILL DECIDE WHICH WORK IS TO BE RELOCATED, REGARDLESS OF WHICH WAS FIRST INSTALLED.

6. THE INSTALLATION MUST COMPLY WITH NEC AND ALL FEDERAL, STATE AND LOCAL RULES AND REGULATIONS.

7. THE DRAWINGS ARE DIAGRAMMATIC AND INDICATE THE GENERAL ARRANGEMENT OF SYSTEMS AND EQUIPMENT UNLESS OTHERWISE DEFINED BY DIMENSIONS OR DETAILS. EXACT EQUIPMENT LOCATIONS AND RACEWAY ROUTING SHALL BE GOVERNED BY ACTUAL FIELD CONDITIONS AND/OR DIRECTIONS FROM AT&T'S REPRESENTATIVE.

8. CONTRACTOR SHALL PAY ALL PERMITS AND FEES REQUIRED.

9. ALL MATERIALS SHALL BE FURNISHED AND WORK SHALL BE PERFORMED IN ACCORDANCE WITH THE APPLICABLE SECTIONS OF THE STANDARDS REFERENCED BELOW:
   a. ANSI (AMERICAN NATIONAL STANDARDS INSTITUTE)
   b. ASTIM (AMERICAN SOCIETY FOR TESTING MATERIALS)
   c. ETL (ELECTRICAL TESTING LABORATORY)
   d. ICEA (INSULATED CABLE ENGINEERS ASSOCIATION)
   e. IEEE (INSTITUTE OF ELECTRICAL AND ELECTRONIC ENGINEERS)
   f. MBFU (NATIONAL BOARD OF FIRE UNDERWRITERS)
   g. NESC (NATIONAL ELECTRICAL SAFETY CODE)
   h. NEMA (NATIONAL ELECTRICAL MANUFACTURER'S ASSOCIATION)
   i. NFPA (NATIONAL FIRE PROTECTION ASSOCIATION)
   j. UL (UNDERWRITER'S LABORATORY)

10. CONTRACTOR SHALL REVIEW PLANS, DETAILS AND SPECIFICATIONS IN DETAIL AND ADJUST WORK TO CONFORM WITH ACTUAL SITE CONDITIONS SO THAT ELECTRICAL DEVICES AND EQUIPMENT WILL BE LOCATED AND READILY ACCESSIBLE. QUANTITIES LISTED IN MATERIAL LISTS ON THE DRAWINGS ARE FOR INFORMATION ONLY. THE CONTRACTOR SHALL PROVIDE HIS OWN TAKEOFF FOR MATERIAL QUANTITY AND TYPES BASED ON ACTUAL SITE CONDITIONS, IN ADDITION, CONTRACTOR SHALL PROVIDE ALL NECESSARY MATERIALS TO INSTALL EQUIPMENT FURNISHED BY AT&T OR ITS SUPPLIERS. ALL ITEMS NOT SPECIFICALLY MENTIONED HEREIN OR SHOWN ON THE DRAWINGS, BUT WHICH ARE OBVIOUSLY NECESSARY TO MAKE A COMPLETE WORKING INSTALLATION, SHALL BE INCLUDED.

11. THE CONTRACTOR OR BIDDER SHALL BEAR THE RESPONSIBILITY OF NOTIFYING (IN WRITING) AT&T'S REPRESENTATIVE OF ANY CONFLICTS PRIOR TO THE SUBMISSION OF CONTRACTOR'S PROPOSAL OR PERFORMANCE OF WORK, IN THE EVENT OF DISCREPANCIES THE CONTRACTOR SHALL PRICE THE MORE COSTLY OR EXTENSIVE WORK, UNLESS DIRECTED IN WRITING OTHERWISE.

12. ALL FLOORS WHERE PENETRATIONS ARE REQUIRED IN BUILDING ARE TO BE CORE DRILLED AND THEN FIREPROOFED.

B. WIRING/CONDUIT

1. PROVIDE PULL BOXES AND JUNCTION BOXES WHERE SHOWN OR AS REQUIRED BY CODE SUCH THAT NO MORE THAN THE EQUIVALENT OF FOUR QUARTER BENDS (380 DEGREES TOTAL) EXIST IN A CONDUIT RUN.

2. ALL POWER AND CONTROL/INDICATION WIRING SHALL BE TYPE THHN/THWN 800V RATED 75 DEGREES CELSIUS, UNLESS NOTED OTHERWISE.

3. SCHEDULE 80 PVC CONDUIT SHALL BE USED ABOVE GROUND, WHERE ABOVE GRADE IS DEFINED AS THE GROUND OF THE TURN-UP

4. BELL END OR TERMINAL ADAPTER MUST BE INSTALLED ON END OF PVC CONDUIT PER NEC 352.46. 300.4 F, (3)

5. CONDUIT BENDS SHALL BE MADE IN ACCORDANCE WITH NEC TABLE 346-10. NO RIGHT ANGLE DEVICE OTHER THAN STANDARD CONDUIT ELBOWS WITH 12" MINIMUM INSIDE SWEEPS FOR ALL CONDUITS 2" OR LARGER.

6. POWER WIRING SIZE SHALL NOT BE SMALLER THAN #12 AWG.

7. ALL WIRING SHALL BE COPPER. ALUMINUM WILL NOT BE ACCEPTABLE ALL POWER CIRCUITS SHALL CONTAIN A GROUND WIRE.

8. PHASE MARKINGS TO BE USED AT POWER CONDUCTOR TERMINATIONS.

9. CONTRACTOR SHALL ENSURE INTEGRITY IS MAINTAINED WHEN INSTALLING CONDUIT AND WIRING.

10. INSTALL PULL STRING IN ALL CONDUIT.

11. FOR ROOFTOP INSTALLS AND BUILD-OUTS, CONDUITS INSIDE BUILDING AND ON ROOF SHALL BE RGS, UNLESS OTHERWISE NOTED. FOR RAW LAND SITES AND CO-LOCATES, PVC SCHEDULE 80 SHALL BE UTILIZED UNLESS NOTED OTHERWISE.

12. MAINTAIN MINIMUM 1'-0" VERTICAL AND 1'-0" HORIZONTAL SEPARATIONS FROM ANY MECHANICAL GAS PIPING.

13. ALL WIRING ROUTED IN PLENUM TO BE RATED OR IN METALLIC FLEX (LIQUIDITE) CONDUIT.

C. EQUIPMENT

1. EQUIPMENT/PARTS CONNECTED TO EXISTING PANELS, DUCTS, ETC. SHALL MATCH THE CHARACTERISTICS (A/C, V, A) OF THAT EQUIPMENT.

2. ALL ELECTRICAL EQUIPMENT OUTSIDE SHALL BE NEMA OR 3R RATED.

D. GROUNDING

1. ALL GROUND CONNECTIONS TO BUILDING SHALL BE MADE USING TWO-HOLE CONNECTORS. PROVIDE STAINLESS STEEL BOLTS AND LOCK WASHERS ON ALL MECHANICAL GROUND CONNECTIONS.

2. ALL EQUIPMENT SURFACES TO BE BONDED TO GROUNDING SYSTEM SHALL BE STRIPPED OF ALL PAINT AND DIRT. CONNECTIONS TO VARIOUS METALS SHALL BE OF A TYPE AS TO CAUSE A GALVANIC OR CORROSIVE REACTION. AREA SHALL BE REPAINTED FOLLOWING BONDING.

3. ANY METALLIC ITEM WITHIN 6' OF GROUND CONDUCTORS MUST BE CONNECTED TO THE GROUNDING SYSTEM.

4. EXTERIOR, ABOVE GRADE GROUND CONNECTIONS SHALL BE FURNISHED WITH A LIBERAL PROTECTIVE COATING OF ANTI-OXIDE COMPOUND.

5. ALL MATERIALS AND LABOR REQUIRED FOR THE GROUNDING SYSTEM AS INDICATED ON THE PLANS AND DETAILS, AND AS DESCRIBED HEREIN SHALL BE FURNISHED BY THIS CONTRACTOR UNLESS OTHERWISE NOTED.

6. EXACT LOCATION OF GROUND CONNECTION POINTS SHALL BE DETERMINED IN FIELD. ADJUST LOCATIONS INDICATED ON PLANS ACCORDING TO ACTUAL EQUIPMENT LOCATIONS TO KEEP THE GROUND CONNECTION CABLES AS SHORT AS PRACTICAL.

7. PROVIDE ALL ELECTRICAL SYSTEM AND EQUIPMENT GROUNDS AS REQUIRED BY THE CURRENT EDITION OF THE NATIONAL ELECTRIC CODE AND THE CURRENT EDITION OF THE NATIONAL ELECTRICAL SAFETY CODE. BONDING JUMPERS WITH APPROVED GROUND FITTINGS SHALL BE INSTALLED AT ALL RACEWAYS, EQUIPMENT ENCLOSURES, PULL BOXES, ETC. TO MAINTAIN GROUND CONTINUITY WHERE REQUIRED BY CODE.

8. ALL EQUIPMENT GROUND CONDUCTORS SHALL BE TIN COATED, #2 AWG COPPER UNLESS NOTED OTHERWISE ON THE DRAWINGS.

9. PROVIDE PRE AND POST GROUND TEST RESULTS, USING CLAMP-ON TESTER. TEST RESULTS SHALL BE PHOTOS WITH DIGITAL TIME AND GPS STAMPED/EMBEDDED.

E. INSPECTION/DOCUMENTATION

1. THE CONTRACTOR, UPON COMPLETION OF HIS WORK, SHALL PROVIDE AS-BUILT DRAWINGS. INFORMATION SHOULD BE GIVEN TO THE GENERAL CONTRACTOR FOR INCLUSION IN FINAL AS-BUILT SURVEY DOCUMENTS TO BE GIVEN TO THE OWNER.

2. CONTRACTOR SHALL SUPPLY DOCUMENTATION ATTESTING TO THE COMPLETE GROUND SYSTEM'S RECEPTIVITY (MAX. 5 OHMS).

3. AN ELECTRICAL INSPECTION SHALL BE MADE BY AND INSPECTING AGENCY APPROVED BY AT&T'S REPRESENTATIVE. CONTRACTOR SHALL COORDINATE ALL INSPECTIONS AND OBTAIN POWER COMPANY APPROVAL.

4. CONTRACTOR SHALL HAVE ATS AND GENERATOR RELAY INSTALLATION AND CONNECTIONS INSPECTED BY OTHERS TO ENSURE THAT UL LISTING FOR THAT EQUIPMENT IS NOT VOIDED.

RAMAKER
employee-owned
(608) 643-4100 www.ramaker.com

PREPARED FOR:

at&t Mobility

CONSULTANT:

GENERAL DYNAMICS
Information Technology, Inc.

GENERAL DYNAMICS
661 MOORE RD STE 110
KING OF PRUSSIA, PA 19406

Certification & Seal:

I hereby certify that this plan, specification, or report was prepared by me or under my direct supervision and that I am a duly Licensed Professional Engineer under the laws of the State of West Virginia.

JAMES R. SKOWRONSKI
REGISTERED
13590
STATE OF
WEST VIRGINIA
PROFESSIONAL ENGINEER

MARK	DATE	DESCRIPTION
1	02/02/22	REVISED CDs

ISSUE PHASE: FINAL — DATE ISSUED: 11/30/2021

PROJECT TITLE:
CHARLESTOWN WATER TANK
FA ID # 10106306

PROJECT INFORMATION:
1376 CHARLES TOWN RD
CHARLES TOWN, WV 25414

SHEET TITLE:
GENERAL NOTES

SCALE: NONE

PROJECT NUMBER: 52754

SHEET NUMBER: N-1

This document contains confidential or proprietary information of Ramaker & Associates, Inc. Neither this document nor the information herein is to be reproduced, distributed, used or disclosed either in whole or in part except as authorized by Ramaker and Associates, Inc.

© Copyright 2021 - Ramaker & Associates, Inc. - All Rights Reserved
DRAWN BY: TRB CHECKED BY: MJR

I:\52700\52754\CAD\52754_10106306_CHARLESTOWN WATER TANK_GENERATOR ATT CDs.dwg Printed by: rguerrero on Feb 02, 2022 - 2:17pm

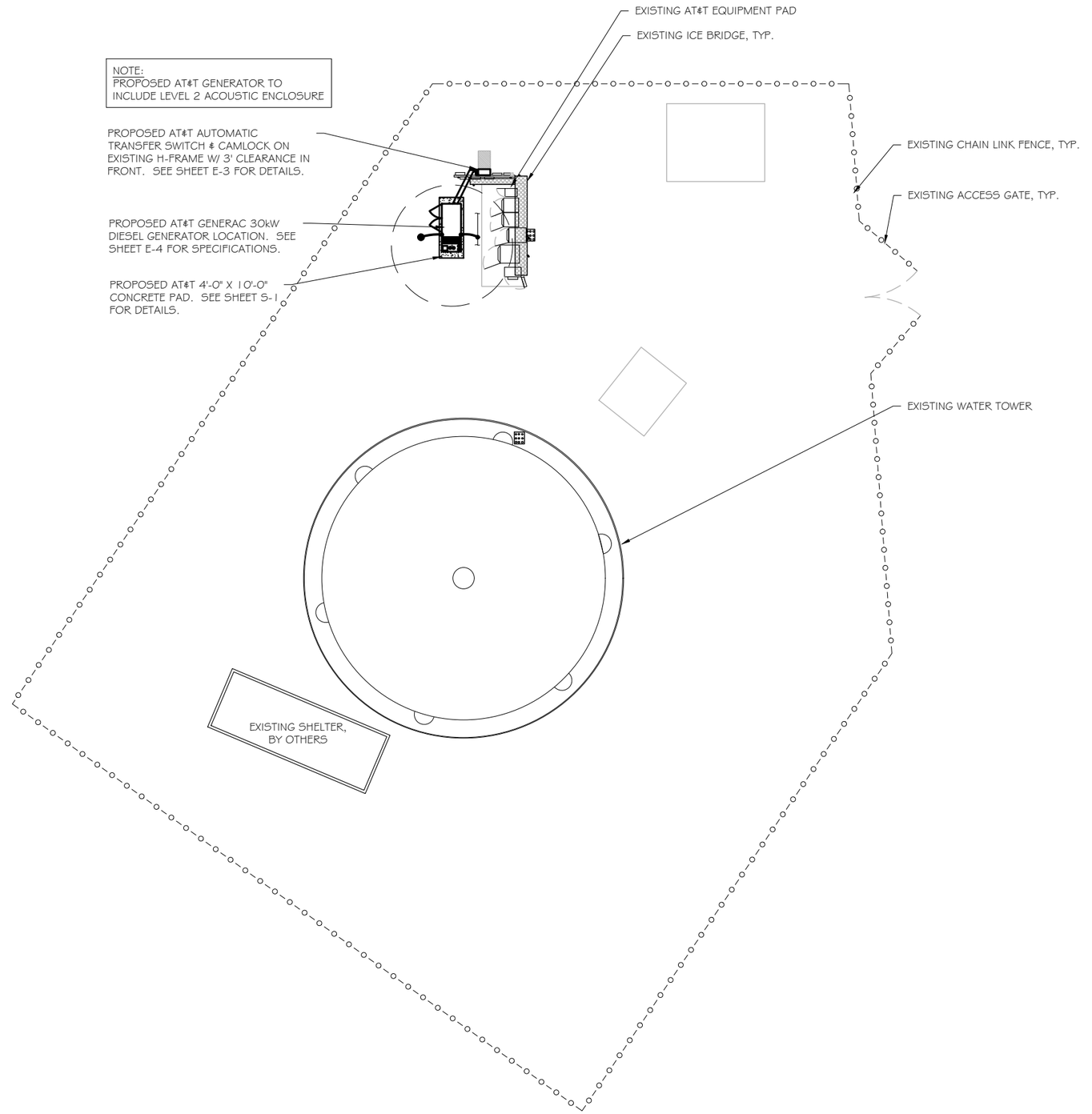

SITE PLAN
SCALE: 1" = 20'

1

RAMAKER
employee-owned
(608) 643-4100 www.ramaker.com

PREPARED FOR:

at&t Mobility

CONSULTANT:

GENERAL DYNAMICS
Information Technology, Inc.

GENERAL DYNAMICS
661 MOORE RD STE 110
KING OF PRUSSIA, PA 19406

Certification & Seal:

I hereby certify that this plan, specification, or report was prepared by me or under my direct supervision and that I am a duly Licensed Professional Engineer under the laws of the State of West Virginia.

JAMES R. SKOWRONSKI
REGISTERED
13590
STATE OF
WEST VIRGINIA
PROFESSIONAL ENGINEER

MARK	DATE	DESCRIPTION
1	02/02/22	REVISED CDs
ISSUE PHASE	FINAL	DATE ISSUED 11/30/2021

PROJECT TITLE:
CHARLESTOWN WATER TANK
FA ID # 10106306

PROJECT INFORMATION:
1376 CHARLES TOWN RD
CHARLES TOWN, WV 25414

SHEET TITLE:
SITE PLAN

0 10' 20' 40'
11" x 17" - 1" = 20'
22" x 34" - 1" = 10'

PROJECT NUMBER 52754
SHEET NUMBER A-1

This document contains confidential or proprietary information of Ramaker & Associates, Inc. Neither this document nor the information herein is to be reproduced, distributed, used or disclosed either in whole or in part except as authorized by Ramaker and Associates, Inc.

© Copyright 2021 - Ramaker & Associates, Inc. - All Rights Reserved
DRAWN BY: TRB CHECKED BY: MJR
I:\52700\52754\CAD\52754_10106306_CHARLESTOWN WATER TANK_GENERATOR ATT CDs.dwg Printed by: rguerrero on Feb 02, 2022 - 2:17pm

SCOPE OF WORK DETAILS

GENERAL:
- NEW GENERAC DIESEL GENERATOR PROVIDED BY GENERAL DYNAMICS & INSTALLED BY GENERAL CONTRACTOR, SEE E-4.
- NEW 4'-0" X 10'-0" CONCRETE PAD PROVIDED & INSTALLED BY GENERAL CONTRACTOR (AS REQUIRED) SEE S-1
- NEW GENERAC AUTOMATIC TRANSFER SWITCH PROVIDED BY GENERAL DYNAMICS & INSTALLED BY CONTRACTOR (AS REQUIRED) SEE E-3 & E-5.
- CONTRACTOR TO VERIFY ALL EXISTING UTILITIES PRIOR TO CONSTRUCTION
- CONTRACTOR SHALL RESTORE & REPAIR ANY DAMAGED AREAS CAUSED BY CONSTRUCTION TO ORIGINAL OR BETTER CONDITION

CONDUITS:
- INSTALL PULL STRING IN EACH CONDUIT
- (1) NEW 2" AND (1) NEW 1" ELECTRICAL CONDUITS WITH CONDUCTORS TO RUN FROM NEW GENERATOR TO NEW ATS. CONDUIT PROVIDED AND INSTALLED BY GENERAL CONTRACTOR. SEE E-1, E-2 & E-3.
- (1) NEW 1" ELECTRICAL CONDUIT WITH CONDUCTORS TO RUN FROM NEW GENERATOR TO AC PANEL. CONDUIT PROVIDED & INSTALLED BY GENERAL CONTRACTOR. SEE E-1, E-2 & E-3.
- (1) NEW 1" ALARM CONDUIT & CABLING PROVIDED & INSTALLED BY GENERAL CONTRACTOR. SEE E-1, E-2 & E-3.

GROUNDING:
- NEW EXOTHERMIC CONNECTION FROM EXISTING GROUND RING TO NEW MECHANICAL CONNECTION AT GENERATOR CHASSIS. GENERAL CONTRACTOR TO VERIFY LOCATION IN FIELD. LOCATE GROUND RODS NO MORE THAN 8'-0" APART.

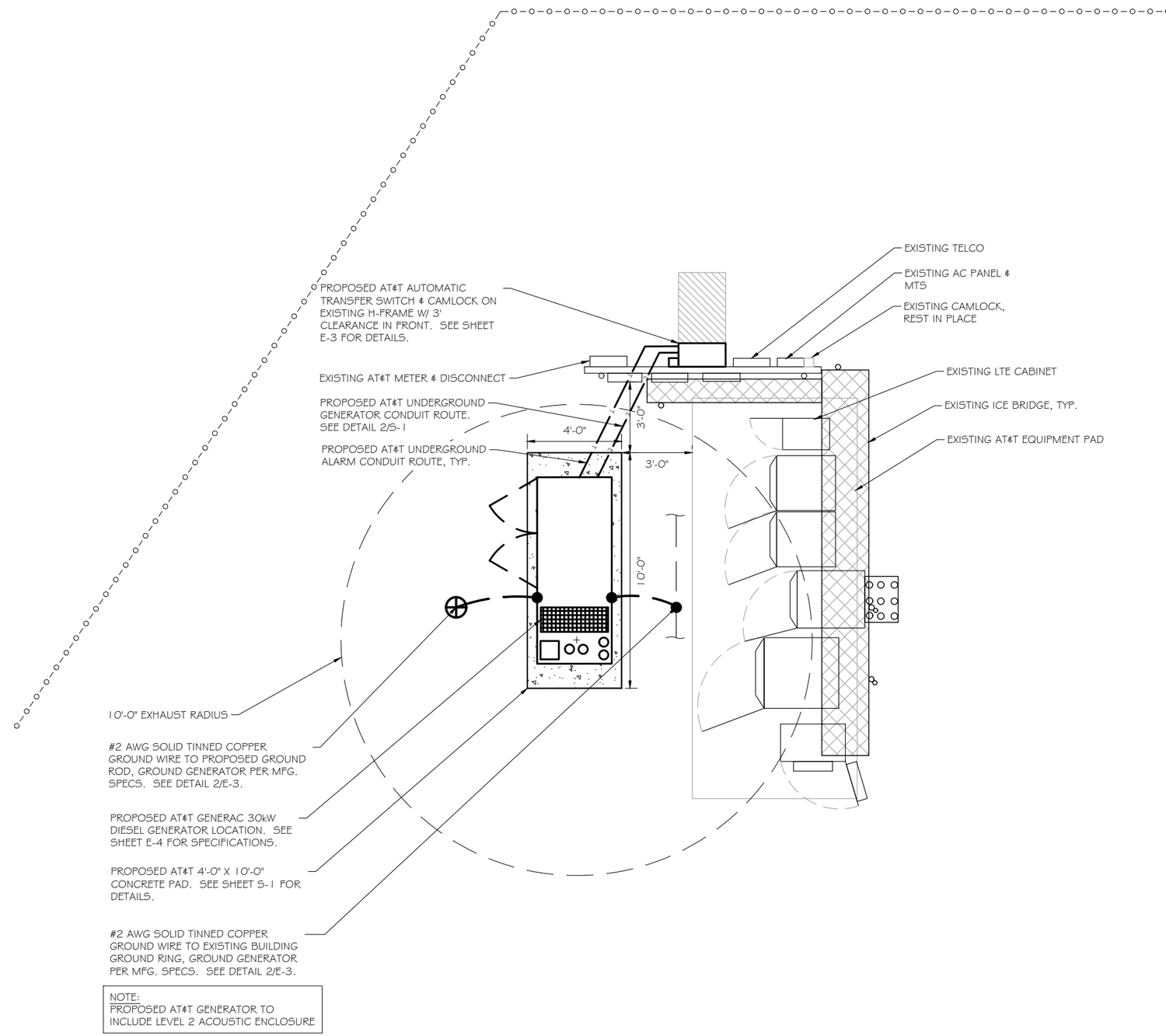

NOTE:
PROPOSED AT&T GENERATOR TO INCLUDE LEVEL 2 ACOUSTIC ENCLOSURE

SITE PLAN
SCALE: 1" = 5'

RAMAKER
employee-owned
(608) 643-4100 www.ramaker.com

PREPARED FOR:
at&t Mobility

CONSULTANT:
GENERAL DYNAMICS
Information Technology, Inc.
GENERAL DYNAMICS
661 MOORE RD STE 110
KING OF PRUSSIA, PA 19406

Certification & Seal:
I hereby certify that this plan, specification, or report was prepared by me or under my direct supervision and that I am a duly Licensed Professional Engineer under the laws of the State of West Virginia.

JAMES R. SKOWRONSKI REGISTERED 13590 STATE OF WEST VIRGINIA PROFESSIONAL ENGINEER
2/02/2022

MARK	DATE	DESCRIPTION
1	02/02/22	REVISED CDs

ISSUE PHASE: FINAL
DATE ISSUED: 11/30/2021

PROJECT TITLE:
CHARLESTOWN WATER TANK
FA ID # 10106306

PROJECT INFORMATION:
1376 CHARLES TOWN RD
CHARLES TOWN, WV 25414

SHEET TITLE:
SITE PLAN & EQUIPMENT LAYOUT

0 2.5' 5' 10'
11" x 17" - 1" = 5'
22" x 34" - 1" = 2.5'

PROJECT NUMBER: 52754
SHEET NUMBER: A-2

This document contains confidential or proprietary information of Ramaker & Associates, Inc. Neither this document nor the information herein is to be reproduced, distributed, used or disclosed either in whole or in part except as authorized by Ramaker and Associates, Inc.

© Copyright 2021 - Ramaker & Associates, Inc. - All Rights Reserved
DRAWN BY: TRB CHECKED BY: MJR
I:\52700\52754\CAD\52754_10106306_CHARLESTOWN WATER TANK_GENERATOR ATT CDs.dwg Printed by: rguerrero on Feb 02, 2022 - 2:18pm

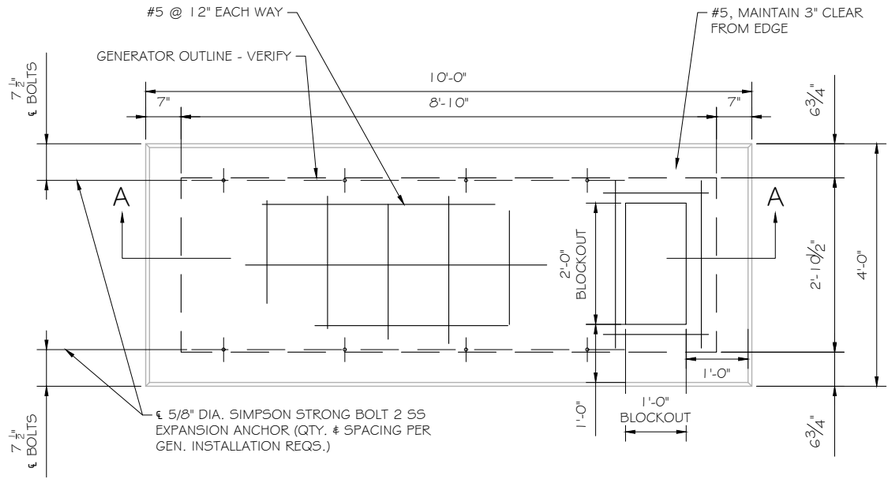

FOUNDATION PLAN (1)
SCALE: NTS

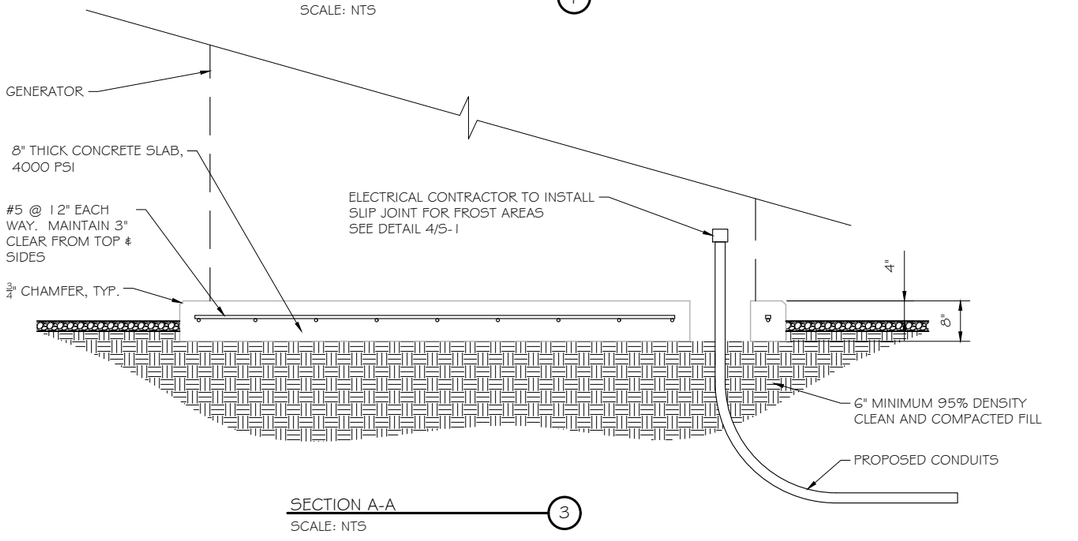

SECTION A-A (3)
SCALE: NTS

DOUBLE WALL FUEL TANK BASE SPECIFICATION

REF: ATT 30KW GENERATOR PACKAGE
UL REGISTRATION NUMBER: MH18459
U.L. 142 DOUBLE WALL FUEL TANK BASE SPECIFICATION
FUEL TANK BASE CONSTRUCTION:
- BE CONSTRUCTED IN ACCORDANCE WITH UNDERWRITERS LABORATORIES STANDARD UL-142. BE CONSTRUCTED IN ACCORDANCE WITH FLAMMABLE & COMBUSTIBLE LIQUIDS CODE, NFPA 30; THE STANDARD FOR INSTALLATION & USE OF STATIONARY COMBUSTIBLE ENGINE & GAS TURBINES, NFPA 37; AND THE STANDARD FOR EMERGENCY & STANDBY POWER SYSTEMS, NFPA 110.
- ANCHORS MINIMUM (4) @ 5/8" FOR GEN-SET MOUNTING

SUB BASE TANK TESTING: PRIMARY TANK & SECONDARY CONTAINMENT BASIN SECTIONS SHALL BE
PRESSURIZED AT 3-5 PSI AND LEAK-CHECKED TO ENSURE INTEGRITY OF SUB BASE WELD SEAMS
PER UL-142 STANDARDS
FUEL FILL: 5 GALLON SPILL CONTAINMENT WITH ALARM
- 40% REMAINING FOR ALARM
- 20% REMAINING FOR SHUT-DOWN

FACTORY PRE-SET AT 95% FULL FOR ALARM
FUEL CONTAINMENT BASIN: SUB BASE TANK SHALL INCLUDE A WELDED STEEL CONTAINMENT BASIN, SIZED AT A MINIMUM OF 110% OF THE TANK CAPACITY TO PREVENT ESCAPE OF FUEL INTO THE ENVIRONMENT IN THE EVENT OF A TANK RUPTURE. A FUEL CONTAINMENT BASIN LEAK DETECTOR SWITCH SHALL BE PROVIDED.

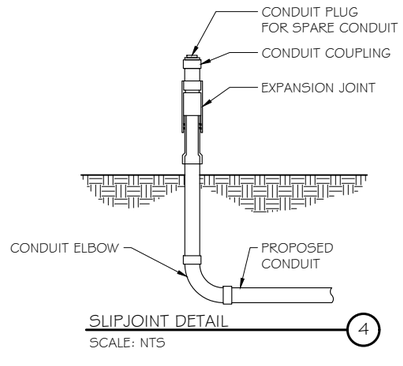

SLIPJOINT DETAIL (4)
SCALE: NTS

NOTE:

VERIFY WIRE AND CONDUIT QUANTITY & SIZES WITH GENERATOR MAKE & MODEL # PRIOR TO INSTALLATION. VERIFY ELECTRICAL REQUIREMENTS WITH LOCAL UTILITY PROVIDER.

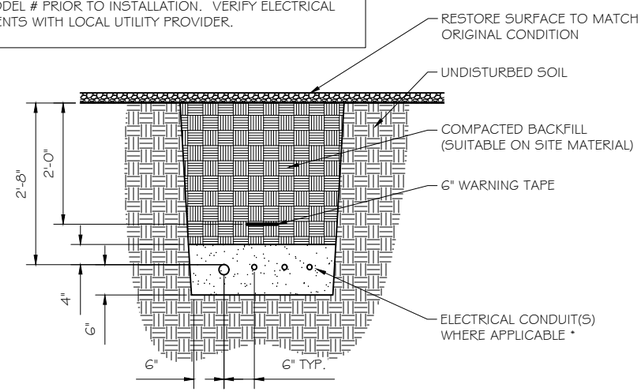

* SEPARATION DIMENSION TO BE VERIFIED WITH LOCAL UTILITY COMPANY REQUIREMENTS

NOTES:
1. PROVIDE PVC CONDUIT BELOW GRADE EXCEPT AS NOTED BELOW.
2. PROVIDE RGS CONDUIT AND ELBOWS AT STUB UP LOCATIONS (I.E. SERVICE POLE, BTS EQUIPMENT, ETC.)
3. INSTALL UTILITY PULLBOXES PER NEC.

UTILITY CONDUIT TRENCH (2)
SCALE: NTS

STRUCTURAL GENERAL NOTES

1.0 GENERAL CONDITIONS
1.1 DESIGN & CONSTRUCTION OF ALL WORK SHALL CONFORM TO LOCAL BUILDING CODES, ACI 318-11. IN CASE OF CONFLICT BETWEEN THE CODES, STANDARDS, REGULATIONS, SPECIFICATIONS, GENERAL NOTES AND/OR MANUFACTURER'S REQUIREMENTS, USE THE MOST STRINGENT PROVISIONS.
1.2 IT IS THE EXPRESS INTENT OF PARTIES INVOLVED IN THIS PROJECT THAT THE CONTRACTOR OR SUBCONTRACTOR OR INDEPENDENT CONTRACTOR OR THE RESPECTIVE EMPLOYEES SHALL EXCULPATE THE ARCHITECT, THE ENGINEER, TECH. CONSTRUCTION MANAGER, THE OWNER, & THEIR AGENTS FROM ANY LIABILITY WHATSOEVER & HOLD THEM HARMLESS AGAINST LOSS, DAMAGES, LIABILITY OR ANY EXPENSE ARISING IN ANY MATTER FROM THE WRONGFUL OR NEGLIGENT ACT, OR FAILURE TO CARRY METHODS, TECHNIQUES OR PROCEDURES OR FAILURE TO CONFORM TO THE STATE SCAFFOLDING ACT IN CONNECTIONS WITH THE WORK.
1.3 DO NOT SCALE DRAWINGS
1.4 VERIFY ALL EQUIPMENT MOUNTING DIMENSIONS PER MANUFACTURER DRAWINGS
1.5 DESIGN LOADS ARE (GENERAC):

LIVE LOAD	: 100 PSF
EQUIPMENT SIZE	: 889.1" H, 106" W, 38" D
WEIGHT WITH WOODEN SHIPPING SKID ENCLOSED GENERATOR	: 3974 LBS

2.0 FOR DESIGN & ANALYSIS OF THE FOUNDATION, THE MINIMUM NET SOIL BEARING CAPACITY SHALL BE ASSUMED TO BE 2000 PSF.
3.0 CONCRETE
3.1 MEET OR EXCEED THE FOLLOWING CODES & STANDARDS:

DESIGN	: ACI318-11
CONSTRUCTION	: ACI301
DETAILING	: CRSI MANUAL OF STANDARD PRACTICE
REINF. STEEL	: ASTM A 615 GRADE 60, DEFORMED
MIXING	: ASTM C 94, READY MIX CONCRETE
AIR ENTRAINMENT	: ACI 318 AND ASTM C-260
AGGREGATE	: ASTM C 33 AND C 330 (FOR LIGHT WEIGHT)

3.2 CONCRETE STRENGTH AT 28 DAYS SHALL BE 4000 PSI MINIMUM
3.3 DO NOT FIELD BEND OR WELD TO GRADE 60 REINFORCED STEEL
3.4 PROVIDE AIR ENTRAINED CONCRETE WITH AIR CONTENT OF 5 TO 7% FOR ALL CONCRETE EXPOSED TO EARTH OR WEATHER.
3.5 MAXIMUM AGGREGATE SIZE: 3/4"
3.6 DO NOT USE IN ADMIXTURE, WATER OR OTHER CONSTITUENTS OF CONCRETE WHICH HAS CALCIUM CHLORIDE.
3.7 MINIMUM COVER FOR REINFORCING STEEL SHALL BE AS SHOWN ON PLAN.
4.0 FOUNDATION & EXCAVATION NOTES
4.1 SLAB SHALL BE CONSTRUCTED UPON UNDISTURBED, NATURAL SUBGRADE OR COMPACTED GRANULAR FILL WITH AN ASSUMED MINIMUM NET ALLOWABLE BEARING CAPACITY OF 1800 PSF.
4.2 ALL ORGANIC AND/OR OTHER UNSUITABLE MATERIAL SHALL BE REMOVED FRO FOUNDATION & SLAB SUBGRADE & BACKFILL AREAS, & THEN BACKFILLED WITH ACCEPTABLE GRANULAR FILL COMPACTED TO 95% OF MAXIMUM DENSITY AT OPTIMUM MOISTURE CONTENT (ASTM D1557).
4.3 THE CONTRACTOR SHALL PROVIDE ALL NECESSARY MEASURES TO PREVENT ANY WATER, FROST, OR ICE FROM PENETRATING ANY FOOTING OR STRUCTURAL SUBGRADE BEFORE & AFTER PLACING OF CONCRETE, AND UNTIL SUCH CONCRETE HAS FULLY CURED.

RAMAKER
employee-owned
(608) 643-4100 www.ramaker.com

PREPARED FOR:
at&t Mobility

CONSULTANT:
GENERAL DYNAMICS
Information Technology, Inc.
GENERAL DYNAMICS
661 MOORE RD STE 110
KING OF PRUSSIA, PA 19406

Certification & Seal:
I hereby certify that this plan, specification, or report was prepared by me or under my direct supervision and that I am a duly Licensed Professional Engineer under the laws of the State of West Virginia.

JAMES R. SKOWRONSKI REGISTERED 13590 STATE OF WEST VIRGINIA PROFESSIONAL ENGINEER
2/02/2022

MARK	DATE	DESCRIPTION
1	02/02/22	REVISED CDs

ISSUE PHASE: FINAL
DATE ISSUED: 11/30/2021

PROJECT TITLE:
CHARLESTOWN WATER TANK
FA ID # 10106306

PROJECT INFORMATION:
1376 CHARLES TOWN RD
CHARLES TOWN, WV 25414

SHEET TITLE:
FOUNDATION DETAILS

SCALE: NONE

PROJECT NUMBER: 52754
SHEET NUMBER: S-1

This document contains confidential or proprietary information of Ramaker & Associates, Inc. Neither this document nor the information herein is to be reproduced, distributed, used or disclosed either in whole or in part except as authorized by Ramaker and Associates, Inc.

© Copyright 2021 - Ramaker & Associates, Inc. - All Rights Reserved
DRAWN BY: TRB CHECKED BY: MJR

I:\52700\52754\CAD\52754_101106306_CHARLESTOWN WATER TANK_GENERATOR ATT CDs.dwg Printed by: rguerrero on Feb 02, 2022 - 2:18pm

DIAGRAM CIRCUIT SCHEDULE

NO.	FROM	TO	WIRES	GROUND	CONDUIT SIZE	FUNCTION
1	NORMAL POWER SOURCE	AUTOMATIC TRANSFER SWITCH	(3) 3/0	(1) #4	2"	NORMAL POWER FEEDER TO ATS (CUT BACK EXISTING)
2	AUTOMATIC TRANSFER SWITCH	LOAD CENTER	(3) 3/0	(1) #4	2"	POWER FEEDER FROM ATS TO PANEL
3	GENERATOR	AUTOMATIC TRANSFER SWITCH	(3) 3/0	(1) #4	2"	EMERGENCY POWER FEEDER TO ATS
4	AUTOMATIC TRANSFER SWITCH	GENERATOR	(2) #10	(1) #10	1"	START CIRCUIT
5	LOAD CENTER (DISTRIBUTION CENTER)	GENERATOR, ATS	(2) #12 (2) #12 (2) #12	(1) #12 (1) #12 (1) #12	1" 1" 1"	CIRCUIT FOR GENERATOR BLOCK HEATER & BATTERY HEATER CIRCUIT FOR BATTERY CHARGER CIRCUIT FOR ATS
6	GENERATOR	AUTOMATIC TRANSFER SWITCH	12-PAIR 24 AWG OR 2EA 6-PAIR CAT5	N/A	1"	ALARM CABLES (1) 12 PAIR 24 AWG. PROVIDE 24" OF SLACK CABLE. FINAL PUNCH DOWN IS BY AT&T TECH. LABEL ALL WIRES
7	AUTOMATIC TRANSFER SWITCH	ALARM BLOCK	12-PAIR 24 AWG OR 2EA 6-PAIR CAT5	N/A	1"	ALARM CABLES (1) 12 PAIR 24 AWG (RUN TO PURCELL CABINET & INTO ALARM BOX). PROVIDE 24" OF SLACK CABLE. FINAL PUNCH DOWN IS BY AT&T TECH. LABEL ALL WIRES

CIRCUIT DETAIL (1)
SCALE: NTS

ALARM WIRE IDENTIFICATION CHART

WIRE	ALARM
BROWN BROWN / WHITE	GENERATOR RUNNING
GREEN GREEN / WHITE	CRITICAL FAULT
BLUE BLUE / WHITE	MINOR FAULT
ORANGE ORANGE / WHITE	LOW FUEL
BROWN * BROWN / WHITE *	FUEL LEAK
*CAT5 CABLE ONLY, FROM 2ND CAT5 CABLE	

ALARM WIRING IDENTIFICATION CHART (2)
SCALE: NTS

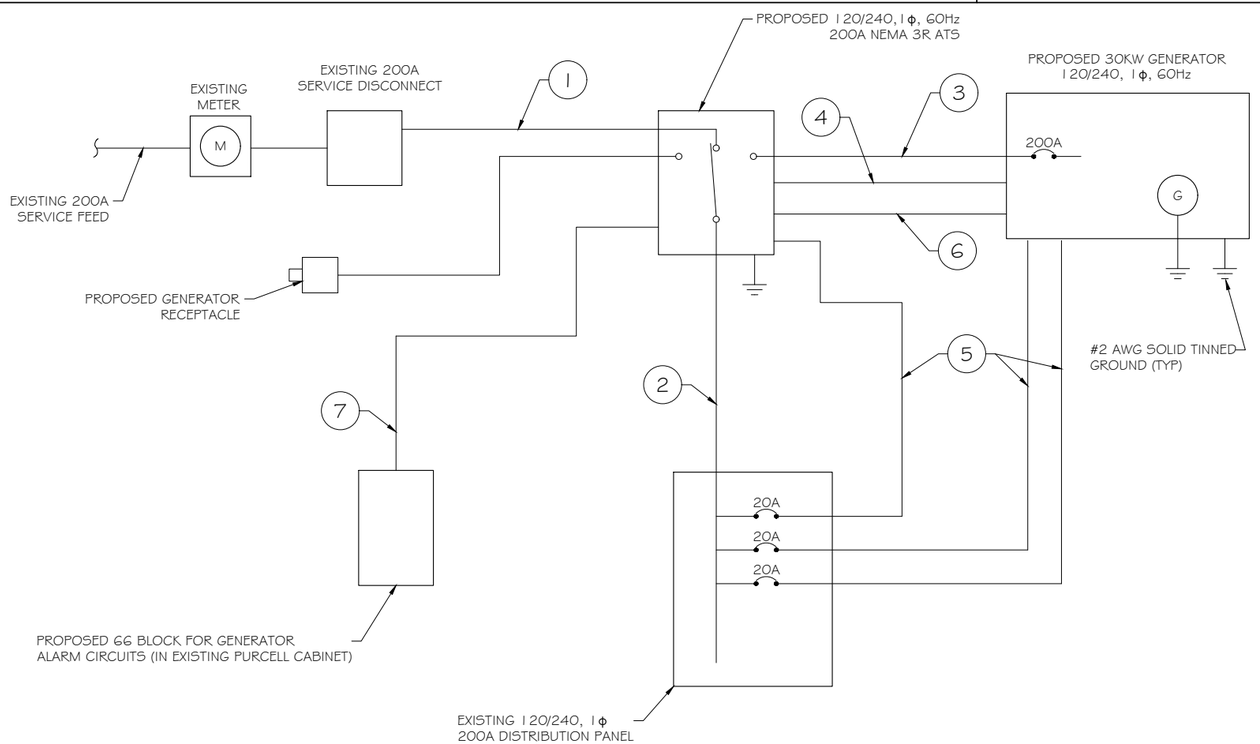

PROPOSED WIRING DIAGRAM (3)
SCALE: NTS

RAMAKER
employee-owned
(608) 643-4100 www.ramaker.com

PREPARED FOR:
at&t Mobility

CONSULTANT:
GENERAL DYNAMICS
Information Technology, Inc.
GENERAL DYNAMICS
661 MOORE RD STE 110
KING OF PRUSSIA, PA 19406

Certification & Seal:
I hereby certify that this plan, specification, or report was prepared by me or under my direct supervision and that I am a duly Licensed Professional Engineer under the laws of the State of West Virginia.

JAMES R. SKOWRONSKI
REGISTERED
13590
STATE OF
WEST VIRGINIA
PROFESSIONAL ENGINEER

MARK	DATE	DESCRIPTION
1	02/02/22	REVISED CDs

ISSUE PHASE: FINAL
DATE ISSUED: 11/30/2021

PROJECT TITLE:
CHARLESTOWN WATER TANK
FA ID # 10106306

PROJECT INFORMATION:
1376 CHARLES TOWN RD
CHARLES TOWN, WV 25414

SHEET TITLE:
WIRING DETAILS

SCALE: NONE

PROJECT NUMBER: 52754
SHEET NUMBER: E-1

This document contains confidential or proprietary information of Ramaker & Associates, Inc. Neither this document nor the information herein is to be reproduced, distributed, used or disclosed either in whole or in part except as authorized by Ramaker and Associates, Inc.

© Copyright 2021 - Ramaker & Associates, Inc. - All Rights Reserved
DRAWN BY: TRB CHECKED BY: MJR

AC Distribution Panel - Layout Diagram									
Breaker Position	Breaker Type	On/Off	Size	Circuit Label	Breaker Position	Breaker Type	On/Off	Size	Circuit Label
1	**1P**	**ON**	**20**	**ATS**	2	2P	ON	30	SURGE ARRESTOR
3	**1P**	**ON**	**20**	**BLOCK HEATER**	4				
5	1P	ON	20	APOLLO A/C	6	1P	ON	40	RECEPTICAL
7	2P	OFF	40	NUSS CKT 1	8	2P	ON	20	UMTS CABINET
9					10				
11	2P	OFF	40	NUSS CKT 2	12	1P	ON	30	APOLLO BOX
13					14	2P	OFF	30	GSM 2 HEATER
15	2P	OFF	40		16				
17					18	2P	ON	20	BA72 CKT #1
19	1P	ON	20		20				
21	**1P**	**ON**	**20**	**BATTERY CHARGER**	22	2P	ON	20	BA72 CKT #2
23					24				

PROPOSED 20A BREAKERS FOR ATS, BLOCK HEATER AND BATTERY CHARGER ON NEW AT&T GENERATOR

EXISTING PANEL SCHEDULE (1)
SCALE: NTS

NOTE:
CONTRACTOR TO LABEL WIRES WITH P-TOUCH OR SIMILAR LABELS ONLY. ABSOLUTELY NO HANDWRITTEN LABELS.

*CONTRACTOR TO UTILIZE NEXT AVAILABLE IN SEQUENCE SINGLE BREAKER POSITION FOR GENERATOR, BATTERY CHARGER, BATTERY HEATER AND BLOCK HEATER

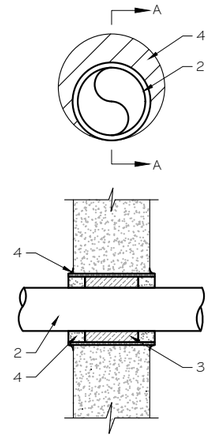

NOTE:
1. IF EXISTING CONSTRUCTION VARIES FROM THIS DETAIL, AN EQUAL 3-HR U.L. PENETRATION APPROPRIATE FOR THE EXISTING WALL TYPE SHALL BE CONSTRUCTED
2. GC SHALL USE NON-SHRINKING CAULK TO WEATHERSEAL ALL PENETRATIONS INTO OR THRU SHELTER WALL.

U.L. SYSTEM NO. C-AJ-1150
CONDUIT THROUGH BEARING WALL SIMILAR TO U.L. DESIGN NO. U902
F RATING = 3 HR
T RATING = 0 HR

1. FLOOR OR WALL ASSEMBLY : MINIMUM 4-1/2" THICK REINFORCED LIGHTWEIGHT OR NORMAL WEIGHT (100-150 PCF) CONCRETE. WALL MAY ALSO BE CONSTRUCTED OF ANY UL CLASSIFIED CONCRETE BLOCKS*. MAX DIAMETER OF OPENING IS 4". SEE CONCRETE BLOCKS 9CATZ) CATEGORY IN THE FIRE RESISTANCE DIRECTORY FOR NAMES OF MANUFACTURERS.
2. THROUGH PENETRATIONS : ONE METALLIC PIPE OR CONDUIT TO BE RIGIDLY SUPPORTED ON BOTH SIDES OF FLOOR OR WALL ASSEMBLY. THE ANNULAR SPACE SHALL BE MINIMUM 0". (POINT CONTACT) TO MAXIMUM 1-3/8". THE FOLLOWING TYPES AND SIZES OF METALLIC PIPES OR CONDUITS MAY BE USED:
   A. STEEL PIPE-NOMINAL 6" DIAMETER (OR SMALLER) SCHEDULE 40 (OR HEAVIER) STEEL PIPE.
   B. IRON PIPE-NOMINAL 6" DIAMETER (OR SMALLER) CAST OR DUCTILE IRON PIPE.
   C. CONDUIT - NOMINAL 4" DIAMETER (OR SMALLER) STEEL ELECTRICAL METALLIC TUBING OR NOMINAL 3-1/2" DIAMETER (OR SMALLER) STEEL CONDUIT.
3. PACKING MATERIAL: MINIMUM 6" THICKNESS OF MIN 4.0 PCF MINERAL WOOL BATTING INSULATION FIRMLY PACKED INTO OPENING AS A PERMANENT FORM. PACKING MATERIAL TO BE RECESSED FROM TOP SURFACE OF FLOOR OR FROM BOTH SURFACES OF WALL AS REQUIRED TO ACCOMMODATE THE REQUIRED THICKNESS OF FILL MATERIAL.
4. FILL, VOID, OR CAVITY MATERIAL*: SEALANT: MINIMUM 1/4" THICKNESS OF FILL MATERIAL APPLIED WITHIN THE ANNULUS, FLUSH WITH TOP SURFACE OF FLOOR AND WITH BOTH SURFACES OF WALL. AT THE POINT CONTACT LOCATION BETWEEN PIPE AND CONCRETE, A MINIMUM 1/2" DIAMETER BEAD OF FILL MATERIAL SHALL BE APPLIED AT THE CONCRETE/PIPE INTERFACE ON THE TOP SURFACE OF FLOOR AND ON BOTH SURFACES OF WALL. W RATING APPLIES ONLY WHEN CP601S OR CP604 SEALANT IS USED.

HILTI CONSTRUCTION CHEMICALS, DIV OF HILTI INC. : CP601S, CP604, CP606, OR FS-ONE SEALANT.

* BEARING THE UL CLASSIFICATION MARK

OUTER WALL PENETRATION DETAIL (IF APPLICABLE) (2)
SCALE: NTS

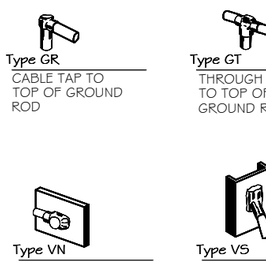

CADWELD DETAILS (3)
SCALE: NTS

RAMAKER
employee-owned
(608) 643-4100 www.ramaker.com

PREPARED FOR:
at&t Mobility

CONSULTANT:
GENERAL DYNAMICS
Information Technology, Inc.
GENERAL DYNAMICS
661 MOORE RD STE 110
KING OF PRUSSIA, PA 19406

Certification & Seal:
I hereby certify that this plan, specification, or report was prepared by me or under my direct supervision and that I am a duly Licensed Professional Engineer under the laws of the State of West Virginia.

JAMES R. SKOWRONSKI REGISTERED 13590 STATE OF WEST VIRGINIA PROFESSIONAL ENGINEER

MARK	DATE	DESCRIPTION
1	02/02/22	REVISED CDs

ISSUE PHASE: FINAL
DATE ISSUED: 11/30/2021

PROJECT TITLE:
CHARLESTOWN WATER TANK
FA ID # 10106306

PROJECT INFORMATION:
1376 CHARLES TOWN RD
CHARLES TOWN, WV 25414

SHEET TITLE:
PANEL AND PENETRATION DETAILS

SCALE: NONE

PROJECT NUMBER: 52754
SHEET NUMBER: E-2

This document contains confidential or proprietary information of Ramaker & Associates, Inc. Neither this document nor the information herein is to be reproduced, distributed, used or disclosed either in whole or in part except as authorized by Ramaker and Associates, Inc.

I:\52700\52754\CAD\52754_10106306_CHARLESTOWN WATER TANK_GENERATOR ATT CDs.dwg Printed by: rguemero on Feb 02, 2022 - 2:18pm

© Copyright 2021 - Ramaker & Associates, Inc. - All Rights Reserved
DRAWN BY: TRB CHECKED BY: MJR

I:\52700\52754\CAD\52754_10106306_CHARLESTOWN WATER TANK_GENERATOR ATT CDs.dwg Printed by: rguemero on Feb 02, 2022 - 2:18pm

1. CONDUIT (TYP)
2. BUTTERFLY CLAMP AS REQUIRED
3. EXISTING WALL/CEILING
4. VERTICAL "UNISTRUT" P1000 'T' SERIES LENGTH BASED ON NUMBER OF CONDUIT TO BE MOUNTED

WALL CONSTRUCTION TYPE	USE
HOLLOW	3/8" DIA. TOGGLE BOLT
HOLLOW, AT STUD	3/8" DIA. LAG SCREW
CONCRETE BLOCK (HOLLOW)	3/8" DIA. HILTI HY-20 WITH SCREEN, MINIMUM EMBEDMENT 2-1/2"
CONCRETE (SOLID)	3/8" DIA. HILTI HY-150 WITH SCREEN, MINIMUM EMBEDMENT 2-1/2"
NOTE: USE GALVANIZED OR STAINLESS STEEL HARDWARE FOR WALL MOUNT & CONNECTIONS OF CHANNELS SPACE UNITS @ 5'-0" O.C. LENGTH OF RUN	

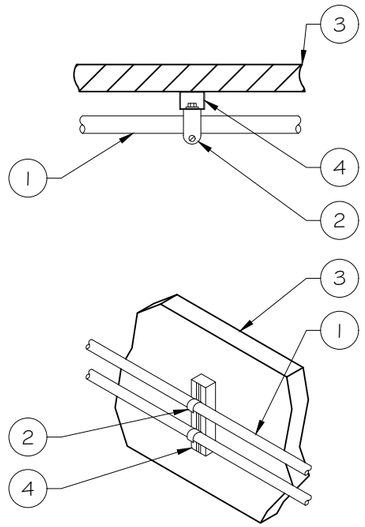

CONDUIT WALL MOUNT 1
SCALE: NTS

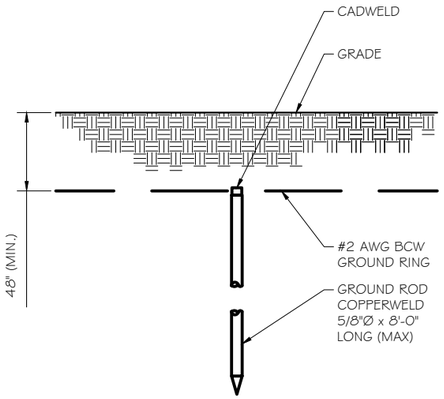

NOTE:
1. GROUND RODS MAY BE:
   - COPPER CLAD STEEL
   - SOLID COPPER
2. GROUND RODS SHALL HAVE A MAXIMUM SPACING TWICE THE LENGTH OF ROD
3. SEE RESISTIVITY REPORT FOR VERIFICATION AS AVAILABLE
4. A LARGER CONDUCTOR SHALL BE REQUIRED IN AREAS HIGHLY PRONE TO LIGHTNING AND/OR AREAS WITH HIGHLY ACIDIC SOIL
5. GROUND RODS INSTALLED WITHIN CLOSE PROXIMITY TO TOWER OR WHEN SOIL IS AT OR BELOW 2,000 OHM-CM, SHALL BE GALVANIZED TO PREVENT GALVANIC CORROSION OF TOWER, (SEE ANSI/TIA-EIA-222-G)
6. PROVIDE (1) GROUND LEAD TO EACH SIDE OF THE GENERATOR

GROUND ROD DETAIL 2
SCALE: NTS

WALL CONSTRUCTION TYPE	USE
HOLLOW	3/8" DIA. TOGGLE BOLT
HOLLOW, AT STUD	3/8" DIA. LAG SCREW
CONCRETE BLOCK (HOLLOW)	7/16" DIA. HILTI HY-20 WITH SCREEN MINIMUM EMBEDMENT 2-1/2"
CONCRETE (SOLID)	7/16" DIA. HILTI HY-150 WITH SCREEN MINIMUM EMBEDMENT 2-1/2"

NOTE:
1. USE GALVANIZED OR STAINLESS STEEL HARDWARE FOR WALL MOUNT AND CONNECTION OF CHANNELS
2. GC SHALL USE NON-SHRINKING CAULK TO WEATHER SEAL ALL PENETRATIONS INTO OR THROUGH SHELTER WALL

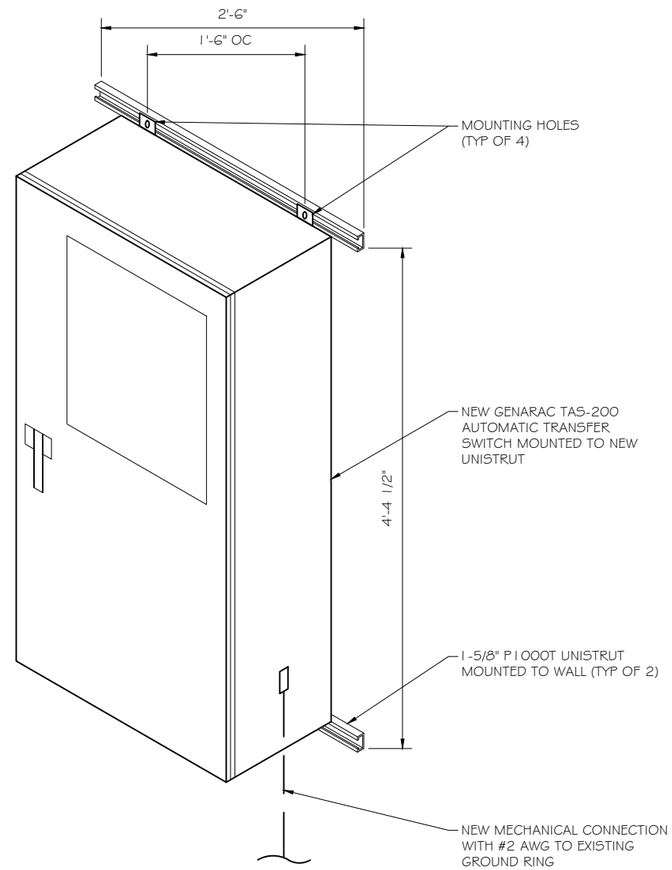

GENERAC ATS MOUNTING DETAIL 3
SCALE: NTS

MJR

RAMAKER
employee-owned
(608) 643-4100 www.ramaker.com

PREPARED FOR:
at&t Mobility

CONSULTANT:
GENERAL DYNAMICS
Information Technology, Inc.
GENERAL DYNAMICS
661 MOORE RD STE 110
KING OF PRUSSIA, PA 19406

Certification & Seal:
I hereby certify that this plan, specification, or report was prepared by me or under my direct supervision and that I am a duly Licensed Professional Engineer under the laws of the State of West Virginia.

JAMES R. SKOWRONSKI REGISTERED 13590 STATE OF WEST VIRGINIA PROFESSIONAL ENGINEER
2/02/2022

MARK	DATE	DESCRIPTION
1	02/02/22	REVISED CDs

ISSUE PHASE: FINAL
DATE ISSUED: 11/30/2021

PROJECT TITLE:
CHARLESTOWN WATER TANK
FA ID # 10106306

PROJECT INFORMATION:
1376 CHARLES TOWN RD
CHARLES TOWN, WV 25414

SHEET TITLE:
ATS, CONDUIT & GROUND ROD DETAILS

SCALE: NONE

PROJECT NUMBER: 52754
SHEET NUMBER: E-3

This document contains confidential or proprietary information of Ramaker & Associates, Inc. Neither this document nor the information herein is to be reproduced, distributed, used or disclosed either in whole or in part except as authorized by Ramaker and Associates, Inc.

© Copyright 2021 - Ramaker & Associates, Inc. - All Rights Reserved
DRAWN BY: TRB CHECKED BY: MJR
Printed by: rguemero on Feb 02, 2022 - 2:18pm
I:\52700\52754\CAD\52754_10106306_CHARLESTOWN WATER TANK_GENERATOR ATT CDs.dwg

SD030 | 2.2L | 30 kW

INDUSTRIAL DIESEL GENERATOR SET

EPA Certified Stationary Emergency

GENERAC | INDUSTRIAL POWER

Standby Power Rating
30 kW, 38 kVA, 60 Hz

Prime Power Rating*
27 kW, 34 kVA, 60 Hz

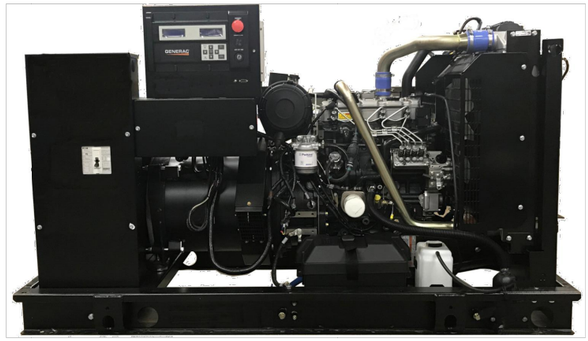

Image used for illustration purposes only

ISO 9001:2008

USA ENGINEERED & BUILT* *Assembled in the USA using domestic and foreign parts

*EPA Certified Prime ratings are not available in the US or its Territories

Codes and Standards

Not all codes and standards apply to all configurations. Contact factory for details.

- UL2200, UL508, UL489, UL142
- CSA C22.2
- BS5514 and DIN 6271
- SAE J1349
- NFPA 37, 70, 99, 110
- NEC700, 701, 702, 708
- ISO 3046, 7637, 8528, 9001
- NEMA ICS10, MG1, 250, ICS6, AB1
- ANSI C62.41

Powering Ahead

For over 50 years, Generac has provided innovative design and superior manufacturing.

Generac ensures superior quality by designing and manufacturing most of its generator components, including alternators, enclosures and base tanks, control systems and communications software.

Generac gensets utilize a wide variety of options, configurations and arrangements, allowing us to meet the standby power needs of practically every application.

Generac searched globally to ensure the most reliable engines power our generators. We choose only engines that have already been proven in heavy-duty industrial applications under adverse conditions.

Generac is committed to ensuring our customers' service support continues after their generator purchase.

SPEC SHEET 1 of 6

SD030 | 2.2L | 30 kW

INDUSTRIAL DIESEL GENERATOR SET

EPA Certified Stationary Emergency

GENERAC | INDUSTRIAL POWER

STANDARD FEATURES

ENGINE SYSTEM

- Oil Drain Extension
- Air Cleaner
- Fan Guard
- Stainless Steel Flexible Exhaust Connection
- Factory Filled Oil and Coolant
- Radiator Duct Adapter (Open Set Only)
- Critical Silencer (Enclosed Unit Only)
- Engine Coolant Heater

Fuel System

- Fuel Lockoff Solenoid
- Primary Fuel Filter

Cooling System

- Closed Coolant Recovery System
- UV/Ozone Resistant Hoses
- Factory-Installed Radiator
- Radiator Drain Extension
- 50/50 Ethylene Glycol Antifreeze

Electrical System

- Battery Charging Alternator
- Battery Cables
- Battery Tray
- Rubber-Booted Engine Electrical Connections
- Solenoid Activated Starter Motor

ALTERNATOR SYSTEM

- UL2200 GENprotect™
- Class H Insulation Material
- 2/3 Pitch
- Skewed Stator
- Brushless Excitation
- Sealed Bearing
- Rotor Dynamically Spin Balanced
- Amortisseur Winding (3-Phase Only)
- Full Load Capacity Alternator
- Protective Thermal Switch

GENERATOR SET

- Internal Genset Vibration Isolation
- Separation of Circuits - High/Low Voltage
- Separation of Circuits - Multiple Breakers
- Wrapped Exhaust Piping
- Standard Factory Testing
- 2 Year Limited Warranty (Standby Rated Units)
- 1 Year Limited Warranty (Prime Rated Units)
- Silencer Mounted in the Discharge Hood (Enclosed Unit Only)

ENCLOSURE (If Selected)

- Rust-Proof Fasteners with Nylon Washers to Protect Finish
- High Performance Sound-Absorbing Material (Sound Attenuation Enclosures)
- Gasketed Doors
- Stamped Air-Intake Louvers
- Upward Facing Discharge Hoods (Radiator and Exhaust)
- Stainless Steel Lift Off Door Hinges
- Stainless Steel Lockable Handles
- RhinoCoat™ - Textured Polyester Powder Coat Paint

FUEL TANKS (If Selected)

- UL 142/ULC S601
- Double Wall
- Normal and Emergency Vents
- Sloped Top
- Sloped Bottom
- Factory Pressure Tested
- Rupture Basin Alarm
- Fuel Level
- Check Valve In Supply and Return Lines
- RhinoCoat™- Textured Polyester Powder Coat Paint
- Stainless Steel Hardware

CONTROL SYSTEM



Digital H Control Panel- Dual 4x20 Display

Program Functions

- Programmable Crank Limiter
- 7-Day Programmable Exerciser
- Special Applications Programmable Logic Controller
- RS-232/485 Communications
- All Phase Sensing Digital Voltage Regulator
- 2-Wire Start Capability
- Date/Time Fault History (Event Log)
- Isochronous Governor Control
- Waterproof/Sealed Connectors
- Audible Alarms and Shutdowns
- Not in Auto (Flashing Light)
- Auto/Off/Manual Switch
- E-Stop (Red Mushroom-Type)
- NFPA110 Level I and II (Programmable)
- Customizable Alarms, Warnings, and Events
- Modbus® Protocol
- Predictive Maintenance Algorithm
- Sealed Boards
- Password Parameter Adjustment Protection
- Single Point Ground
- 16 Channel Remote Trending
- 0.2 msec High Speed Remote Trending
- Alarm Information Automatically Annunciated on the Display

Full System Status Display

- Power Output (kW)
- Power Factor
- kW Hours, Total, and Last Run
- Real/Reactive/Apparent Power
- All Phase AC Voltage
- All Phase Currents
- Oil Pressure
- Coolant Temperature
- Coolant Level
- Engine Speed
- Battery Voltage
- Frequency

Alarms and Warnings

- Oil Pressure
- Coolant Temperature
- Coolant Level
- Engine Overspeed
- Battery Voltage
- Alarms and Warnings Time and Date Stamped
- Snap Shots of Key Operation Parameters During Alarms and Warnings
- Alarms and Warnings Spelled Out (No Alarm Codes)

SPEC SHEET 2 of 6

NOTE:
GENERATOR TO INCLUDE LEVEL 2 ACOUSTIC ENCLOSURE

GENERAC 30KW GENERATOR SPECIFICATIONS (1)
SCALE: NTS

RAMAKER
employee-owned
(608) 643-4100 www.ramaker.com

PREPARED FOR:

at&t Mobility

CONSULTANT:
GENERAL DYNAMICS
Information Technology, Inc.
GENERAL DYNAMICS
661 MOORE RD STE 110
KING OF PRUSSIA, PA 19406

Certification & Seal:
I hereby certify that this plan, specification, or report was prepared by me or under my direct supervision and that I am a duly Licensed Professional Engineer under the laws of the State of West Virginia.

JAMES R. SKOWRONSKI REGISTERED 13590 STATE OF WEST VIRGINIA PROFESSIONAL ENGINEER

MARK	DATE	DESCRIPTION
1	02/02/22	REVISED CDs

ISSUE PHASE: FINAL DATE ISSUED: 11/30/2021

PROJECT TITLE:
CHARLESTOWN WATER TANK
FA ID # 10106306

PROJECT INFORMATION:
1376 CHARLES TOWN RD
CHARLES TOWN, WV 25414

SHEET TITLE:
GENERAC 30KW GENERATOR SPECIFICATIONS

SCALE: NONE

PROJECT NUMBER: 52754
SHEET NUMBER: E-4

This document contains confidential or proprietary information of Ramaker & Associates, Inc. Neither this document nor the information herein is to be reproduced, distributed, used or disclosed either in whole or in part except as authorized by Ramaker and Associates, Inc.

© Copyright 2021 - Ramaker & Associates, Inc. - All Rights Reserved
DRAWN BY: TRB CHECKED BY: MJR
Printed by: rguerrero on Feb 02, 2022 - 2:18pm
I:\52700\52754\CAD\52754_101106306_CHARLESTOWN WATER TANK_GENERATOR ATT CDs.dwg

SD030 | 2.2L | 30 kW

INDUSTRIAL DIESEL GENERATOR SET

EPA Certified Stationary Emergency

CONFIGURABLE OPTIONS

ENGINE SYSTEM

- Oil Heater
- Critical Silencer (Open Set Only)
- Radiator Stone Guard
- Level 1 Fan and Belt Guards (Open Set Only)

FUEL SYSTEM

- NPT Flexible Fuel Line

ELECTRICAL SYSTEM

- 10A UL Listed Battery Charger
- Battery Warmer

ALTERNATOR SYSTEM

- Alternator Upsizing
- Anti-Condensation Heater
- Tropical Coating
- Permanent Magnet Excitation

GENERATOR SET

- Extended Factory Testing
- 8 Position Load Center
- Pad Vibration Isolation

CIRCUIT BREAKER OPTIONS

- Main Line Circuit Breaker
- 2nd Main Line Circuit Breaker
- Shunt Trip and Auxiliary Contact
- Electronic Trip Breakers

ENCLOSURE

- Weather Protected Enclosure
- Level 1 Sound Attenuation
- Level 2 Sound Attenuation
- Level 2 Sound Attenuation with Motorized Dampers
- Steel Enclosure
- Aluminum Enclosure
- Up to 200 MPH Wind Load Rating (Contact Factory for Availability)
- AC/DC Enclosure Lighting Kit
- Door Alarm Switch
- Enclosure Heater
- Damper Alarm Contacts

WARRANTY (Standby Gensets Only)

- 2 Year Extended Limited Warranty
- 5 Year Limited Warranty
- 5 Year Extended Limited Warranty
- 7 Year Extended Limited Warranty
- 10 Year Extended Limited Warranty

CONTROL SYSTEM

- NFPA 110 Compliant 21-Light Remote Annunciator
- Remote Relay Assembly (8 or 16)
- Oil Temperature Indication and Alarm
- Remote E-Stop (Break Glass-Type, Surface Mount)
- Remote E-Stop (Red Mushroom-Type, Surface Mount)
- Remote E-Stop (Red Mushroom-Type, Flush Mount)
- 100 dB Alarm Horn
- Ground Fault Annunciation
- 120V GFCI and 240V Outlets
- Remote Communication - Modem
- 10A Engine Run Relay

FUEL TANKS (Size On Last Page)

- 8 in (203.2 mm) Fill Extension
- 13 in (330.2 mm) Fill Extension
- 19 in (482.6 mm) Fill Extension
- Overfill Protection Valve
- 5 Gallon Spill Box Return Hose
- 5 Gallon Spill Box
- Tank Risers
- Fuel Level Switch and Alarm
- 12' Vent System
- Fire Rated Stainless Steel Fuel Hose

ENGINEERED OPTIONS

ENGINE SYSTEM

- Coolant Heater Isolation Ball Valves
- Fluid Containment Pan

CONTROL SYSTEM

- Spare Inputs (x4) / Outputs (x4)
- Battery Disconnect Switch

ALTERNATOR SYSTEM

- 3rd Breaker System

GENERATOR SET

- Special Testing

FUEL TANKS

- UL2085 Tank
- Stainless Steel Tanks
- Special Fuel Tanks
- Vent Extensions

SPEC SHEET 3 of 6

NOTE:
GENERAC TO INCLUDE LEVEL 2 ACOUSTIC ENCLOSURE

GENERAC 30KW GENERATOR SPECIFICATIONS (1)
SCALE: NTS

SD030 | 2.2L | 30 kW

INDUSTRIAL DIESEL GENERATOR SET

EPA Certified Stationary Emergency

APPLICATION AND ENGINEERING DATA

ENGINE SPECIFICATIONS

General

Make	Perkins
EPA Emissions Compliance	Stationary Emergency
EPA Emissions Reference	See Emission Data Sheet
Cylinder #	4
Type	In-Line
Displacement - in^3 (L)	135 (2.22)
Bore - in (mm)	3.3 (84)
Stroke - in (mm)	3.9 (100)
Compression Ratio	23.3:1
Intake Air Method	Turbocharged
Cylinder Head	Cast Iron
Piston Type	Aluminum
Crankshaft Type	Forged Steel

Engine Governing

Governor	Electronic Isochronous
Frequency Regulation (Steady State)	±0.5%

Lubrication System

Oil Pump Type	Gear
Oil Filter Type	Full-Flow
Crankcase Capacity - qt (L)	11.2 (10.6)

Cooling System

Cooling System Type	Closed Recovery
Water Pump Type	Pre-Lubed, Self Sealing
Fan Type	Pusher
Fan Speed - RPM	1,980
Fan Diameter - in (mm)	18 (457)

Fuel System

Fuel Type	Ultra Low Sulfur Diesel Fuel #2
Fuel Specifications	ASTM
Fuel Filtering (Microns)	5
Fuel Inject Pump	Distribution Injection Pump
Fuel Pump Type	Engine Driven Gear
Injector Type	Mechanical
Fuel Supply Line - in (mm)	0.31 (7.9) ID
Fuel Return Line - in (mm)	0.2 (4.8) ID

Engine Electrical System

System Voltage	12 VDC
Battery Charger Alternator	Standard
Battery Size	See Battery Index 0161970SBY
Battery Voltage	12 VDC
Ground Polarity	Negative

ALTERNATOR SPECIFICATIONS

Standard Model	K0035124Y21
Poles	4
Field Type	Revolving
Insulation Class - Rotor	H
Insulation Class - Stator	H
Total Harmonic Distortion	<5% (3-Phase)
Telephone Interference Factor (TIF)	< 50
Standard Excitation	Brushless
Bearings	Single Sealed
Coupling	Direct via Flexible Disc
Load Capacity - Standby	100%
Prototype Short Circuit Test	Yes
Voltage Regulator Type	Digital
Number of Sensed Phases	All
Regulation Accuracy (Steady State)	±0.25%

SPEC SHEET 4 of 6

RAMAKER
employee-owned
(608) 643-4100 www.ramaker.com

PREPARED FOR:

at&t Mobility

CONSULTANT:

GENERAL DYNAMICS
Information Technology, Inc.

GENERAL DYNAMICS
661 MOORE RD STE 110
KING OF PRUSSIA, PA 19406

Certification & Seal:

I hereby certify that this plan, specification, or report was prepared by me or under my direct supervision and that I am a duly Licensed Professional Engineer under the laws of the State of West Virginia.

JAMES R. SKOWRONSKI REGISTERED 13590 STATE OF WEST VIRGINIA PROFESSIONAL ENGINEER
2/02/2022

MARK	DATE	DESCRIPTION
1	02/02/22	REVISED CDs

ISSUE PHASE: FINAL
DATE ISSUED: 11/30/2021

PROJECT TITLE:
CHARLESTOWN WATER TANK
FA ID # 10106306

PROJECT INFORMATION:
1376 CHARLES TOWN RD
CHARLES TOWN, WV 25414

SHEET TITLE:
GENERAC 30KW GENERATOR SPECIFICATIONS

SCALE: NONE

PROJECT NUMBER: 52754
SHEET NUMBER: E-4.1

This document contains confidential or proprietary information of Ramaker & Associates, Inc. Neither this document nor the information herein is to be reproduced, distributed, used or disclosed either in whole or in part except as authorized by Ramaker and Associates, Inc.

© Copyright 2021 - Ramaker & Associates, Inc. - All Rights Reserved
DRAWN BY: TRB CHECKED BY: MJR

SD030 | 2.2L | 30 kW

INDUSTRIAL DIESEL GENERATOR SET

EPA Certified Stationary Emergency

GENERAC | INDUSTRIAL POWER

OPERATING DATA

POWER RATINGS

		Standby
Single-Phase 120/240 VAC @1.0pf	30 kW	Amps: 125
Three-Phase 120/208 VAC @0.8pf	30 kW	Amps: 104
Three-Phase 120/240 VAC @0.8pf	30 kW	Amps: 90
Three-Phase 277/480 VAC @0.8pf	30 kW	Amps: 45
Three-Phase 346/600 VAC @0.8pf	30 kW	Amps: 36

MOTOR STARTING CAPABILITIES (skVA)

skVA vs. Voltage Dip

277/480 VAC	30%	208/240 VAC	30%
K0035124Y21	61	K0035124Y21	46
K0040124Y21	76	K0040124Y21	58
K0050124Y21	98	K0050124Y21	75

FUEL CONSUMPTION RATES*

Fuel Pump Lift- ft (m)
3 (1)

Total Fuel Pump Flow (Combustion + Return) - gph (Lph)
16.6 (63)

Diesel - gph (Lph)

Percent Load	Standby
25%	1.0 (3.7)
50%	1.4 (5.2)
75%	2.0 (7.5)
100%	2.8 (10.5)

* Fuel supply installation must accommodate fuel consumption rates at 100% load.

COOLING

		Standby
Coolant Flow	gpm (Lpm)	14.9 (56.2)
Coolant System Capacity	gal (L)	2.5 (9.5)
Heat Rejection to Coolant	BTU/hr (kW)	128,638 (136)
Inlet Air	scfm (m^3/hr)	2,800 (4,757)
Maximum Operating Ambient Temperature	°F (°C)	122 (50)
Maximum Operating Ambient Temperature (Before Derate)	See Bulletin No. 0199280SSD	
Maximum Radiator Backpressure	in H_2O (kPa)	0.5 (0.12)

COMBUSTION AIR REQUIREMENTS

	Standby
Flow at Rated Power scfm (m^3/min)	88 (2.5)

ENGINE

		Standby
Rated Engine Speed	RPM	1,800
Horsepower at Rated kW**	hp	49
Piston Speed	ft/min (m/min)	1,181 (360)
BMEP	psi (kPa)	159 (1,096)

EXHAUST

		Standby
Exhaust Flow (Rated Output)	scfm (m^3/min)	296.6 (8.4)
Max. Allowable Backpressure (Post Turbocharger)	inHg (kPa)	1.5 (5.1)
Exhaust Temp (Rated Output)	°F (°C)	892 (478)

** Refer to "Emissions Data Sheet" for maximum bHP for EPA and SCAQMD permitting purposes.

Deration – Operational characteristics consider maximum ambient conditions. Derate factors may apply under atypical site conditions.
Please contact a Generac Power Systems Industrial Dealer for additional details. All performance ratings in accordance with ISO3046, BS5514, ISO8528, and DIN6271 standards.
Standby - See Bulletin 0187500SSB
Prime - See Bulletin 0187510SSB

SPEC SHEET 5 of 6

SD030 | 2.2L | 30 kW

INDUSTRIAL DIESEL GENERATOR SET

EPA Certified Stationary Emergency

GENERAC | INDUSTRIAL POWER

DIMENSIONS AND WEIGHTS*

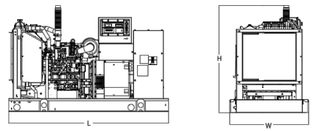

OPEN SET (Includes Exhaust Flex)

Run Time - Hours	Usable Capacity - Gal (L)	L x W x H - in (mm)	Weight - lbs (kg)
No Tank	-	76.0 (1,930) x 37.4 (950) x 44.8 (1,138)	1,641 (745)
19	54 (204)	76.0 (1,930) x 37.4 (950) x 57.8 (1,468)	2,121 (963)
47	132 (501)	76.0 (1,930) x 37.4 (950) x 69.8 (1,773)	2,351 (1,067)
75	211 (799)	76.0 (1,930) x 37.4 (950) x 81.8 (2,078)	2,560 (1,162)
107	300 (1,136)	92.9 (2,360) x 37.4 (950) x 81.8 (2,078)	2,623 (1,190)

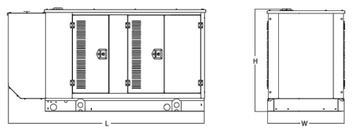

WEATHER PROTECTED ENCLOSURE

Run Time - Hours	Usable Capacity - Gal (L)	L x W x H - in (mm)	Weight - lbs (kg) Enclosure Only	
			Steel	Aluminum
No Tank	-	94.8 (2,409) x 38.0 (965) x 49.5 (1,258)	372 (170)	241 (110)
19	54 (204)	94.8 (2,409) x 38.0 (965) x 62.5 (1,588)		
47	132 (501)	94.8 (2,409) x 38.0 (965) x 74.5 (1,893)		
75	211 (799)	94.8 (2,409) x 38.0 (965) x 86.5 (2,198)		
107	300 (1,136)	94.8 (2,409) x 38.0 (965) x 86.5 (2,198)		

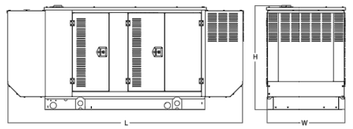

LEVEL 1 ACOUSTIC ENCLOSURE

Run Time - Hours	Usable Capacity - Gal (L)	L x W x H - in (mm)	Weight - lbs (kg) Enclosure Only	
			Steel	Aluminum
No Tank	-	112.5 (2,857) x 38.0 (965) x 49.5 (1,258)	505 (230)	338 (154)
19	54 (204)	112.5 (2,857) x 38.0 (965) x 62.5 (1,582)		
47	132 (501)	112.5 (2,857) x 38.0 (965) x 74.5 (1,893)		
75	211 (799)	112.5 (2,857) x 38.0 (965) x 86.5 (2,198)		
107	300 (1,136)	112.5 (2,857) x 38.0 (965) x 86.5 (2,198)		

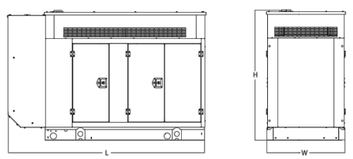

LEVEL 2 ACOUSTIC ENCLOSURE

Run Time - Hours	Usable Capacity - Gal (L)	L x W x H - in (mm)	Weight - lbs (kg) Enclosure Only	
			Steel	Aluminum
No Tank	-	94.8 (2,407) x 38.0 (965) x 61.1 (1,551)	510 (232)	341 (155)
19	54 (204)	94.8 (2,407) x 38.0 (965) x 74.1 (1,881)		
47	132 (501)	94.8 (2,407) x 38.0 (965) x 86.1 (2,186)		
75	211 (799)	94.8 (2,407) x 38.0 (965) x 98.1 (2,491)		
107	300 (1,136)	94.8 (2,407) x 38.0 (965) x 98.1 (2,491)		

* All measurements are approximate and for estimation purposes only. Specification characteristics may change without notice. Please contact a Generac Power Systems Industrial Dealer for detailed installation drawings.

SPEC SHEET 6 of 6

Generac Power Systems, Inc. | P.O. Box 8 | Waukesha, WI 53189
P: (262) 544-4811 ©2018 Generac Power Systems, Inc. All rights reserved. All specifications are subject to change without notice.
Part No. 10000024842
Rev. B 08/27/18

NOTE:
GENERATOR TO INCLUDE LEVEL 2 ACOUSTIC ENCLOSURE

GENERAC 30KW GENERATOR SPECIFICATIONS (1)
SCALE: NTS

RAMAKER
employee-owned
(608) 643-4100 www.ramaker.com

PREPARED FOR:
at&t Mobility

CONSULTANT:
GENERAL DYNAMICS
Information Technology, Inc.
GENERAL DYNAMICS
661 MOORE RD STE 110
KING OF PRUSSIA, PA 19406

Certification & Seal:
I hereby certify that this plan, specification, or report was prepared by me or under my direct supervision and that I am a duly Licensed Professional Engineer under the laws of the State of West Virginia.

JAMES R. SKOWRONSKI REGISTERED PROFESSIONAL ENGINEER 13590 STATE OF WEST VIRGINIA

MARK	DATE	DESCRIPTION
1	02/02/22	REVISED CDs

ISSUE PHASE: FINAL
DATE ISSUED: 11/30/2021

PROJECT TITLE:
CHARLESTOWN WATER TANK
FA ID # 10106306

PROJECT INFORMATION:
1376 CHARLES TOWN RD
CHARLES TOWN, WV 25414

SHEET TITLE:
GENERAC 30KW GENERATOR SPECIFICATIONS

SCALE: NONE

PROJECT NUMBER: 52754
SHEET NUMBER: E-4.2

This document contains confidential or proprietary information of Ramaker & Associates, Inc. Neither this document nor the information herein is to be reproduced, distributed, used or disclosed either in whole or in part except as authorized by Ramaker and Associates, Inc.

I:\52700\52754\CAD\52754_10106306_CHARLESTOWN WATER TANK_GENERATOR ATT CDs.dwg Printed by: rguerrero on Feb 02, 2022 - 2:18pm

© Copyright 2021 - Ramaker & Associates, Inc. - All Rights Reserved
DRAWN BY: TRB CHECKED BY: MJR

I:\52700\52754\CAD\52754_101106306_CHARLESTOWN WATER TANK_GENERATOR ATT CDs.dwg Printed by: rguerrero on Feb 02, 2022 - 2:18pm

TTS Series Switches

200 Amps 600 VAC

GENERAC® | INDUSTRIAL POWER

TAS200

200A Automatic Transfer Switch

TAS200 TAS200

1 of 3 2 of 3

The Generac TAS200 Automatic Transfer Switch

Flexibility for multiple application installations

Multiple generator support with 3 source panel

Designed with a 6 inch touch screen controller for improved user interface

Camlock functionality for mobile generator sources



Image used for illustration purposes only.

Features

- **STEEL CONSTRUCTION**
- **NEMA 3R ENCLOSURE WITH HINGED "PADLOCKING" DOORS**
- **STAINLESS STEEL HARDWARE**
- **CAMLOCK "QUICK CONNECT" CAPABILITY**
- **OPERATIONAL STATUS VIEW VIA 6 INCH TOUCH SCREEN**
- **TEST FUNCTION - FAST TEST & NORMAL TEST**
- **UL1008 LISTED - FOR EMERGENCY SYSTEMS**

Optional Features

- **EXTENDED WARRANTY**
- **THREE-PHASE VOLTAGE CONFIGURATIONS**

Codes and Standards

Generac products are designed to the following standards:

c UL us LISTED — UL1008, UL508, UL50, CSA C22.2 No. 178

nec® — NEC 700, 701 and 702

NEMA — NEMA 250

Application and Engineering Data

Cabinet Specifications	
Dimensions	24"W x 12"D x 48"H
Weight	210 lbs.
Construction	Single Chamber with Main Door
	Steel
	UL Type / NEMA 3R Rated
	Powder Coat Finish for Corrosion Resistance
	C-UL-US Listed - Automatic Transfer Switch
	Stainless Steel Hardware
	3-Point Latching System with Pad-Lockable Handles
Mounting Options	Wall
	H-frame
Installed	Pre-wired alarm terminal strip

Electrical Specifications	
Voltage/Phase/Amps	120/240 Single-Phase, 200A 120/208 3-Phase, 200A 120/240 3-Phase, 200A
Breaker	Eaton 200 amp Utility Breaker
	Eaton 200 amp Generator Breaker
Maximum RMS Symmetrical Fault Current - Amps	25k AIC Rated
Protective Device Continuous Rating (Max) Amp	200
Input to Generator	350MCM - #6 AWG
Output to Site	350MCM - #6 AWG
Generator Annunciator Connector	Deutsch DTM04-12PA-L012
Alarm Terminal Board	Generator Run Alarm
	Generator Fail – Shutdown Alarm
	Generator Fail – Non Shutdown Alarm
	Low Fuel Alarm
	Generator Theft Alarm
	AC Utility Fail Alarm

Camlock Component		
Camlock Component	Shipped loose for multiple installation options	
Dimensions	9" W x 9.4" D x 24.25" H	
200A Camlock Generator Connection	Single-Phase: Black L1, Red L2, White-Neutral, Green-Ground	
	3-Phase: Black L1, Red L2, Blue L3, White-Neutral, Green-Ground	
	Uses 4 CH E1016 Male Connectors	
	Mating Connector – CH E1016 Female	

GENERAC ATS SPECIFICATIONS 1
SCALE: NTS

RAMAKER
employee-owned
(608) 643-4100 www.ramaker.com

PREPARED FOR:
at&t Mobility

CONSULTANT:
GENERAL DYNAMICS
Information Technology, Inc.
GENERAL DYNAMICS
661 MOORE RD STE 110
KING OF PRUSSIA, PA 19406

Certification & Seal:
I hereby certify that this plan, specification, or report was prepared by me or under my direct supervision and that I am a duly Licensed Professional Engineer under the laws of the State of West Virginia.

JAMES R. SKOWRONSKI REGISTERED 13590 STATE OF WEST VIRGINIA PROFESSIONAL ENGINEER

MARK	DATE	DESCRIPTION
1	02/02/22	REVISED CDs

ISSUE PHASE: FINAL — DATE ISSUED: 11/30/2021

PROJECT TITLE:
CHARLESTOWN WATER TANK
FA ID # 10106306

PROJECT INFORMATION:
1376 CHARLES TOWN RD
CHARLES TOWN, WV 25414

SHEET TITLE:
GENERAC ATS SPECIFICATIONS

SCALE: NONE

PROJECT NUMBER: 52754
SHEET NUMBER: E-5

This document contains confidential or proprietary information of Ramaker & Associates, Inc. Neither this document nor the information herein is to be reproduced, distributed, used or disclosed either in whole or in part except as authorized by Ramaker and Associates, Inc.

© Copyright 2021 - Ramaker & Associates, Inc. - All Rights Reserved
DRAWN BY: TRB CHECKED BY: MJR
Printed by: rguerrero on Feb 02, 2022 - 2:18pm
I:\52700\52754\CAD\52754_10106306_CHARLESTOWN WATER TANK_GENERATOR ATT CDs.dwg

GENERAC | INDUSTRIAL POWER

TTS Control Systems

TAS200

3 of 3

Touch Screen Interface



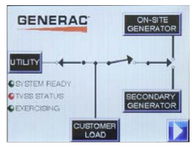

INDICATORS AND BUTTONS

• System Ready indicator • Standby Operating indicator • Utility Available indicator • GEN/UTIL Switch Position indicator • TVSS status	• Normal Test button • Fast Test button • Return to Normal button • Reset button • Exercising indicator

DETAILS SCREEN

System Settings:

- System Voltage/Phases:
  - 120/240V single phase (standard)
  - 120/208V three phase (optional)
  - 120/240V three phase (optional)
- Utility Fail Monitor:
  - Under Voltage: 75-95% of nominal voltage
  - Over Voltage: 105%-125% of nominal voltage
  - Pickup (hysteresis): fixed at 5 volts
  - Delay time: 0-60s
- Utility Interrupt Delay: 0-60s
- Return to Utility Timer: 1-30 minutes
- Transfer:
  - In-phase, or
  - Time-Delay-Neutral at 0.0-10.0s in 1 second increments

Engine Settings:

- Engine Warm-up timer: 0-20 minutes
- Generator Load Accept:
  - Time-Delay-Neutral at 0.0-10.0s in 1 second increments
  - Voltage: 85-95% of nominal
  - Frequency: 85-95% of nominal
- Engine Minimum Run Timer: 5-30 minutes
- Engine Cooldown Timer: 0-20 minutes

Exercise Settings:

- Time of day
- Day of week
- Exercise:
  - Exercise with/without load
  - Exercise once every 1, 2, or 4 weeks.
  - Exercise time-of-day
  - Exercise day of week
  - Exercise duration: 15-30 minutes

Screen Settings:

- Brightness & Contrast button
- Screen Calibration button
- Startup/Clean screen

Diagnostics:

- Digital I/O bits status
- Voltage A/D readings

Mimic Diagram:

- System Ready
- Transfer switch position
- Utility available
- Standby available
- Maintenance/Auto switch position
- Generator source TS position
- TVSS status

Generac Power Systems, Inc. • S45 W29290 HWY. 59, Waukesha, WI 53189 • generac.com
©2013 Generac Power Systems, Inc. All rights reserved. All specifications are subject to change without notice. Bulletin 0195670SBY-B / Printed in U.S.A. 03/13/13

GENERAC ATS SPECIFICATIONS (1)
SCALE: NTS

RAMAKER
employee-owned
(608) 643-4100 www.ramaker.com

PREPARED FOR:
at&t Mobility

CONSULTANT:
GENERAL DYNAMICS
Information Technology, Inc.
GENERAL DYNAMICS
661 MOORE RD STE 110
KING OF PRUSSIA, PA 19406

Certification & Seal:
I hereby certify that this plan, specification, or report was prepared by me or under my direct supervision and that I am a duly Licensed Professional Engineer under the laws of the State of West Virginia.

JAMES R. SKOWRONSKI REGISTERED 13590 STATE OF WEST VIRGINIA PROFESSIONAL ENGINEER
2/02/2022

MARK	DATE	DESCRIPTION
1	02/02/22	REVISED CDs

ISSUE PHASE: FINAL
DATE ISSUED: 11/30/2021

PROJECT TITLE:
CHARLESTOWN WATER TANK
FA ID # 10106306

PROJECT INFORMATION:
1376 CHARLES TOWN RD
CHARLES TOWN, WV 25414

SHEET TITLE:
GENERAC ATS SPECIFICATIONS

SCALE: NONE

PROJECT NUMBER: 52754
SHEET NUMBER: E-5.1

This document contains confidential or proprietary information of Ramaker & Associates, Inc. Neither this document nor the information herein is to be reproduced, distributed, used or disclosed either in whole or in part except as authorized by Ramaker and Associates, Inc.

Charles Town Water Department
Revenue & Expense Summary
1/31/2022

Annual Budget		Y-T-D Budget	Y-T-D Actual	Difference
	REVENUES			
2,740,000	Metered Sales - Residential	1,598,333	1,526,811	(71,523)
1,210,000	Metered Sales - Commercial	705,833	778,871	73,037
105,000	Metered Sales - Glen Haven/Cavaland	61,250	59,725	(1,525)
15,000	Sale for Resale - Bulk Water	8,750	11,041	2,291
80,000	Forfieted Discounts	46,667	40,021	(6,646)
25,000	Misc. Service Rev - Reconnection / Tap Fees	14,583	13,650	(933)
515,000	Tank Lot Rental Income	300,417	307,894	7,478
8,000	Interest Income	4,667	2,873	(1,794)
2,000	Sinking Fund Income	1,167	32	(1,135)
75,000	Miscellaneous Income	43,750	40,540	(3,210)
0	Grant Revenue - OEHS SWAP EWM	-	46,765	46,765
0	CIF & CAC Revenue	-	297,322	297,322
0	Checking Acct @ 6/30/21	-	551,603	551,603
4,775,000	**TOTAL REVENUES**	2,785,417	3,677,148	891,731
	EXPENSES			
82,000	Operation Labor - SOS Pumping	47,833	41,416	(6,417)
20,000	Supplies & Expense	11,667	165	(11,502)
20,000	Maint of Water Source	11,667	-	(11,667)
246,000	Operation Labor - WTP	143,500	150,536	7,036
125,000	Power & Fuel - WTP	72,917	58,956	(13,961)
6,000	Power & Fuel - WTP GH/CAV	3,500	2,383	(1,117)
20,000	Supplies & Expense - WTP	11,667	7,125	(4,542)
10,000	Supplies & Expense - GH/CAV	5,833	1,699	(4,135)
120,000	Chemicals	70,000	75,042	5,042
45,000	Testing	26,250	11,024	(15,226)
90,000	Maint Water Treatment Plant	52,500	47,954	(4,546)
10,000	Maint of Water Plant - GH/CAV	5,833	1,925	(3,908)
440,000	Maintenance Labor	256,667	252,010	(4,657)
20,000	Supplies & Expense - Maint	11,667	9,267	(2,399)
75,000	Maint Dist Reservior & Standpipes	43,750	59,163	15,413
150,000	Maint of Mains	87,500	14,022	(73,478)
200,000	Maint of Services	116,667	73,094	(43,572)
175,000	Maint of Meters	102,083	60,296	(41,787)
25,000	Maint of Hydrants	14,583	3,489	(11,094)
170,000	Accounting & Collecting Labor	99,167	89,920	(9,247)
30,000	Supplies & Expense - Acct & Collect	17,500	7,951	(9,549)
30,000	Bad Debt Expense	17,500	4,773	(12,727)
115,000	Admin & General Salaries	67,083	68,776	1,692
156,000	Employee Insurance & Benefits	91,000	84,936	(6,064)
106,000	Employee Pension Expense	61,833	57,994	(3,839)

Charles Town Water Department
Revenue & Expense Summary
1/31/2022

81,000	Payroll Taxes - FICA Tax Expense	47,250	46,474	(776)
30,000	OPEB (other post empl benefits)	17,500	12,291	(5,209)
114,000	Office Supplies & Other Expense	66,500	61,568	(4,932)
15,000	Maintenance of General Property	8,750	3,536	(5,214)
10,000	Contractual Services - Engineering	5,833	52,101	46,268
20,000	Contractual Services - Accounting	11,667	9,063	(2,604)
15,000	Contractual Services - Legal	8,750	2,442	(6,308)
60,000	Contractual Services - Other	35,000	24,923	(10,077)
40,000	Transportation Expense	23,333	24,369	1,035
75,000	Property Insurance	43,750	62,558	18,808
45,000	Injuries & Damages	26,250	21,717	(4,533)
20,000	Regulatory Commission Expense	11,667	1,655	(10,012)
6,000	Bond Administration Fees	3,500	2,769	(731)
10,000	Misc General Expense	5,833	4,251	(1,583)
1,180,000	Depreciation Expense	688,333	688,333	(0)
480,000	Interest on Long Term debt	280,000	235,610	(44,390)
78,000	Amortization - Bond Discount	45,500	45,500	-
4,765,000	**TOTAL EXPENSES**	2,779,583	2,483,078	(296,506)

10,000	Excess (Deficit)	5,833	1,194,070	
	Reconciliation to Cash:			
	Cash Balance @ 6/30/21		551,603	
	Disbursements To Date		(2,909,813)	
	Expenses		2,483,078	
	Deposits To Date		3,196,868	
	Revenues		(3,677,148)	
	CASH BALANCE @ 1/31/2022		838,658	
			838,658	Water Operating
			(0)	
	Water Capacity Improvement Fees		2,038,756	
	Water Renewal & Replacement		756,115	
	Water Working Capital Fund		366,925	

Charles Town Sewer Department
Revenue & Expense Summary
1/31/2022

Annual Budget		Y-T-D Budget	Y-T-D Actual	Difference
	REVENUES			
2,310,000	CTUB Service Revenue	1,347,500	1,383,201	35,701
1,330,000	Sewer Service Revenue - Ranson	775,833	828,881	53,048
2,376,000	Sewer Service Revenue - JCPSD	1,386,000	1,472,716	86,716
40,000	Customer Forfieted Discounts	23,333	22,029	(1,305)
27,000	Customer Forfieted Discounts- RA	15,750	13,603	(2,147)
50,000	Customer Forfieted Discounts- PSD	29,167	23,784	(5,383)
42,000	Misc. Sewer Revenues	24,500	10,419	(14,081)
0	CIF & CAC Revenues	-	225,788	225,788
8,000	Interest Income	4,667	4,094	(573)
3,000	Sinking Fund Income	1,750	27	(1,723)
0	Checking Acct @ 6/30/21	-	2,046,245	2,046,245
6,186,000	**TOTAL REVENUES**	3,608,500	6,030,786	2,422,286
	EXPENSES			
20,000	Supplies & Expense	11,667	8,924	(2,743)
18,000	Maint of Service Connections	10,500	35,551	25,051
300,000	Maint of Collecting & Trans. Mains	175,000	94,341	(80,659)
336,000	Operation Labor	196,000	181,642	(14,358)
120,000	Power & Fuel	70,000	75,499	5,499
25,000	Supplies & Expense	14,583	7,245	(7,338)
250,000	Maint of Pump Stations	145,833	113,625	(32,209)
230,000	Operation Labor	134,167	132,608	(1,559)
130,000	Power - CT Plant	75,833	57,758	(18,075)
75,000	Power - TUI	43,750	43,432	(318)
10,000	Power - Deerfield	5,833	2,775	(3,058)
150,000	Chemical Expense - CT	87,500	87,898	398
20,000	Chemical Expense - TUI	11,667	4,990	(6,676)
30,000	Testing - CT	17,500	16,099	(1,401)
5,000	Testing - TUI	2,917	3,274	357
95,000	Supplies & Expense	55,417	58,993	3,576
120,000	Maint. Burns Farm	70,000	41,170	(28,830)
240,000	Maint. Treatment Plant - CT	140,000	51,845	(88,155)
80,000	Maint. Treatment Plant - TUI	46,667	37,961	(8,706)
15,000	Maint. Treatment Plant - Deerfield	8,750	7,263	(1,487)
212,000	Billing, Collecting & Accounting Labor	123,667	116,891	(6,776)
85,000	Billing Fees Expense	49,583	51,137	1,553
35,000	Bad Debt Expense	20,417	10,909	(9,508)
180,000	Admin. & General Salaries	105,000	95,796	(9,204)
130,000	Employee Insurance & Benefits	75,833	80,232	4,398
98,000	Employee Pension Expense	57,167	52,229	(4,937)
75,000	Payroll Taxes - FICA Tax Expense	43,750	41,207	(2,543)
26,000	OPEB (other post empl. benefits)	15,167	11,373	(3,794)

Charles Town Sewer Department
Revenue & Expense Summary
1/31/2022

135,000	Office Supplies & Expense	78,750	68,030	(10,720)
35,000	Maint. of General Property	20,417	8,588	(11,829)
60,000	Contractual Services - Engineering	35,000	33,147	(1,853)
32,000	Contractual Services - Accounting	18,667	16,737	(1,930)
130,000	Contractual Services - Legal	75,833	96,055	20,222
78,000	Contractual Services - Other	45,500	36,856	(8,644)
55,000	Transportation Expense	32,083	35,499	3,416
100,000	Insurance	58,333	65,460	7,127
36,000	Worker's Comp	21,000	17,063	(3,937)
30,000	Regulatory Commission Expense	17,500	2,337	(15,163)
71,000	Bond Administration Fees	41,417	25,498	(15,918)
10,000	Misc. General Expense	5,833	4,989	(844)
1,800,000	Depreciation Expense	1,050,000	1,050,000	-
345,000	Interest on Long Term Debt	201,250	163,367	(37,883)
57,000	Amort. Of Debt Discount & Expense	33,250	33,250	-
6,084,000	**TOTAL EXPENSES**	3,549,000	3,179,542	(369,458)
102,000	**Excess (Deficit)**	59,500	2,851,244	

Reconciliation to Cash:			
Cash Balance @ 6/30/21		2,046,245	
Disbursements To Date		(3,650,133)	
Expenses		3,179,542	
Deposits To Date		3,797,629	
Revenues		(6,030,786)	
CASH BALANCE 1/31/2022		2,193,740	
		2,193,740	Sewer Operating
		(0)	
Sewer Capacity Improvement Fees		2,558,762	
Sewer Renewal & Replacement		640,632	
Sewer Working Capital Fund		704,882	

		Tuscawilla HAA	Tuscawilla THM	Boundary HAA	Boundary THM	Moose HAA	Moose THM	200 N West HAA	200 N West THM
1st 2019		29.5	23.4	21.2	15.6	21.8	20.5	29.9	11.2
2nd 2019		68.5	69.2	51.6	48.6	61.8	67.3	40.5	30.6
3rd 2019		84.2	218	72.2	100	58.8	137	91	79.1
4th 2019		78.5	62.8	81	55.4	106	92.7	49.1	31.6
1st 2020		21.1	20	20.7	17.2	25.2	21.8	23.6	15.9
2nd 2020		48.7	47.2	47.2	23.5	42.8	29.2	42.4	27.5
3rd 2020		90.6	76.5	97.1	81	10.6	78.6	90.2	82.3
4th 2020		21.3	51.6	24.8	36.4	15.2	47.2	29.2	30.3
1st 2021		13.4	14.2	12.0	13.5	15.7	14.1	22.4	9.5
2nd 2021		30.7	35.2	67.1	42.2	29.9	31.5	46.8	49.6
3rd 2021		62.8	57.0	62.3	57.0	25.3	59.0	38.5	53.0
4th 2021		28.0	33.5	26.0	34.4	15.0	34.2	34.0	33.1
1st qtr 2019 to 4th qtr 2019	Averag e	65.175	93.350	56.500	54.900	62.100	79.375	52.625	38.125
	MCL	60	80	60	80	60	80	60	80
2nd qtr 2019 to 1st qtr 2020	Averag e	63.075	92.500	56.375	55.300	62.950	79.700	51.050	39.300
	MCL	60	80	60	80	60	80	60	80
3rd qtr 2019 to 2nd atr 2020	Averag e	58.125	87.000	55.275	49.025	58.200	70.175	51.525	38.525
	MCL	60	80	60	80	60	80	60	80
4th qtr 2019 to 3rd qtr 2020	Averag e	59.725	51.625	61.500	44.275	46.150	55.575	51.325	39.325
	MCL	60	80	60	80	60	80	60	80
1st qtr 2020 to 4th qtr 2020	Averag e	45.425	48.825	47.450	39.525	23.450	44.200	46.350	39.000
	MCL	60	80	60	80	60	80	60	80
2nd qtr 2020 to 1st qtr 2021	Averag e	43.5	47.4	45.3	38.6	21.1	42.3	46.1	37.4
	MCL	60	80	60	80	60	80	60	80
3rd qtr 2020 to 2nd qtr 2021	Averag e	39.0	44.4	50.3	43.3	17.9	42.9	47.2	42.9
	MCL	60	80	60	80	60	80	60	80
4th qtr 2020 to 3rd qtr 2021	Averag e	32.1	39.5	41.6	37.3	21.5	38.0	34.2	35.6
	MCL	60	80	60	80	60	80	60	80
1st qtr 2021 to 4th qtr 2021	Averag e	33.7	35.0	41.9	36.8	21.5	34.7	35.4	36.3
	MCL	60	80	60	80	60	80	60	80

CHARLES TOWN UTILITY BOARD
WATER TREATMENT PLANT FLOW DATA

CHARLES TOWN WATER PLANT FLOW DATA						
YEAR	Total Design (MGD)	TOTAL ANNUAL FLOW (MG)	AVERAGE DAILY (MGD)	Total Design minus Average Daily	Total Available (gpd)	Total Available (EDU's)
2019	2.8	644.32	1.77	1.03498	1,034,980	6,900
2020	2.8	615.64	1.68	1.12	1,117,946	7,453
2021	2.8	601.87	1.64	1.16	1,164,627	7,764
2022	2.8	47.92	1.55	1.25	1,254,234	8,362

2020		
	Total	AVERAGE
JANUARY	53,689,445	1,731,918
FEBRUARY	49,700,448	1,713,809
MARCH	51,009,216	1,645,459
APRIL	46,966,864	1,565,562
MAY	50,753,036	1,637,195
JUNE	52,587,142	1,752,905
JULY	54,394,477	1,754,661
AUGUST	54,972,785	1,773,316
SEPTEMBER	50,996,141	1,699,871
OCTOBER	51,222,251	1,652,331
NOVEMBER	49,014,344	1,633,811
DECEMBER	50,338,278	1,623,815
Annual Total	615,644,427	1,682,054

2021		
	Total	AVERAGE
JANUARY	50,030,727	1,613,894
FEBRUARY	45,304,029	1,618,001
MARCH	50,881,983	1,641,354
APRIL	49,098,224	1,636,607
MAY	53,910,537	1,739,050
JUNE	53,051,728	1,711,346
JULY	53,198,248	1,716,073
AUGUST	54,959,872	1,772,899
SEPTEMBER	49,200,580	1,587,115
OCTOBER	49,336,781	1,591,509
NOVEMBER	45,777,260	1,476,686
DECEMBER	47,118,143	1,519,940
Annual Total	601,868,112	1,635,373

2022		
	Total	AVERAGE
JANUARY	47,918,736	1,545,766
FEBRUARY		
MARCH		
APRIL		
MAY		
JUNE		
JULY		
AUGUST		
SEPTEMBER		
OCTOBER		
NOVEMBER		
DECEMBER		
Annual Total	47,918,736	1,545,766

GLEN HAVEN WATER PLANT FLOW DATA						
YEAR	Total Design (MGD)	TOTAL ANNUAL FLOW (MG)	AVERAGE DAILY (MGD)	Total Design minus Average Daily	Total Available (gpd)	
2020	0.0216	1.04	0.01	0.01	13,120	
2021	0.0216	3.06	0.01	0.01	13,213	-
2022	0.0216	0.20	0.01	0.02	15,010	-

2020		
	Total	AVERAGE
JANUARY		
FEBRUARY		
MARCH		
APRIL		
MAY		
JUNE		
JULY		
AUGUST		
SEPTEMBER	283,900	9,158
OCTOBER	265,000	8,548
NOVEMBER	250,800	8,360
DECEMBER	243,500	7,855
Annual Total	1,043,200	8,480

2021		
	Total	AVERAGE
JANUARY	242,200	7,813
FEBRUARY	203,500	7,268
MARCH	241,800	8,636
APRIL	262,300	8,743
MAY	289,700	9,345
JUNE	276,500	8,919
JULY	302,900	9,771
AUGUST	302,900	9,771
SEPTEMBER	227,800	7,348
OCTOBER	285,100	9,197
NOVEMBER	227,200	7,329
DECEMBER	201,500	6,500
Annual Total	3,063,400	8,387

2022		
	Total	AVERAGE
JANUARY	204,300	6,590
FEBRUARY		
MARCH		
APRIL		
MAY		
JUNE		
JULY		
AUGUST		
SEPTEMBER		
OCTOBER		
NOVEMBER		
DECEMBER		
Annual Total	204,300	6,590

CAVALAND WATER PLANT FLOW DATA						
YEAR	Total Design (MGD)	TOTAL ANNUAL FLOW (MG)	AVERAGE DAILY (MGD)	Total Design minus Average Daily	Total Available (gpd)	
2020	0.036	0.59	0.00	0.03	31,210	
2021	0.036	1.91	0.01	0.03	30,766	
2022	0.036	0.15	0.00	0.03	31,158	

2020		
	Total	AVERAGE
JANUARY		
FEBRUARY		
MARCH		
APRIL		
MAY		
JUNE		
JULY		
AUGUST		
SEPTEMBER	141,900	4,577
OCTOBER	140,300	4,526
NOVEMBER	151,500	5,050
DECEMBER	155,200	5,006
Annual Total	588,900	4,790

2021		
	Total	AVERAGE
JANUARY	150,900	4,868
FEBRUARY	132,900	4,746
MARCH	145,800	5,207
APRIL	152,900	5,097
MAY	177,900	5,739
JUNE	159,000	5,129
JULY	169,600	5,471
AUGUST	177,300	5,719
SEPTEMBER	175,600	5,665
OCTOBER	176,000	5,677
NOVEMBER	151,200	4,877
DECEMBER	143,000	4,613
Annual Total	1,912,100	5,234

2021		
	Total	AVERAGE
JANUARY	150,100	4,842
FEBRUARY		
MARCH		
APRIL		
MAY		
JUNE		
JULY		
AUGUST		
SEPTEMBER		
OCTOBER		
NOVEMBER		
DECEMBER		
Annual Total	150,100	4,842

CHARLES TOWN UTILITY BOARD
WASTEWATER TREATMENT PLANT FLOW DATA

CHARLES TOWN WASTEWATER PLANT FLOW DATA						
YEAR	Total Design (MGD)	TOTAL ANNUAL FLOW (MG)	AVERAGE DAILY (MGD)	Total Design minus Average Daily	Total Available (gpd)	Total Available (EDU's)
2015	1.75	384	1.05	0.7	700,000	4,667
2016	1.75	419	1.14	0.61	610,000	4,067
2017	1.75	393	1.08	0.67	670,000	4,467
2018	1.75	491	1.34	0.41	410,000	2,733
2019	1.75	459	1.26	0.49	490,000	3,267
2020	1.75	419.7	1.15	0.60	603,333	4,022
2021	1.75	401.61	1.11	0.64	637,500	4,250
2022	1.75	37.25	1.20	0.55	550,000	3,667

TUSCAWILLA WASTEWATER PLANT FLOW DATA						
YEAR	Total Design (MGD)	TOTAL ANNUAL FLOW (MG)	AVERAGE DAILY (MGD)	Total Design minus Average Daily	Total Available (gpd)	Total Available (EDU's)
2015	0.5	48	0.13	0.37	370,000	2,467
2016	0.5	49	0.13	0.37	370,000	2,467
2017	0.5	48	0.14	0.36	360,000	2,400
2018	0.5	78	0.21	0.29	290,000	1,933
2019	0.5	55.24	0.15	0.35	350,000	2,333
2020	0.5	1.09	0.16	0.34	340,000	2,267
2021	0.5	32.55	0.10	0.40	400,833	2,672
2022	0.5	0	#DIV/0!	#DIV/0!	#DIV/0!	#DIV/0!

Total EDU's available between CT and Tuscawilla	
2015	7,133
2016	6,533
2017	6,867
2018	4,667
2019	5,600
2020	6,289
2021	6,922
2022	#DIV/0!

2020		
	Total	AVERAGE
JANUARY	39.05	1.26
FEBRUARY	36.74	1.27
MARCH	36.76	1.19
APRIL	33.32	1.11
MAY	35.50	1.15
JUNE	33.44	1.11
JULY	34.45	1.11
AUGUST	32.65	1.05
SEPTEMBER	32.43	1.08
OCTOBER	33.91	1.09
NOVEMBER	33.49	1.12
DECEMBER	37.96	1.22
Annual Total	419.7	1.15

2021		
	Total	AVERAGE
JANUARY	35.83	1.22
FEBRUARY	32.98	1.18
MARCH	36.39	1.17
APRIL	34.33	1.18
MAY	33.24	1.07
JUNE	36.24	1.21
JULY	30.99	1.00
AUGUST	29.94	0.97
SEPTEMBER	36.36	1.17
OCTOBER	29.97	0.97
NOVEMBER	30.12	1.00
DECEMBER	35.22	1.21
Annual Total	401.61	1.11

2022		
	Total	AVERAGE
JANUARY	37.25	1.2
FEBRUARY		
MARCH		
APRIL		
MAY		
JUNE		
JULY		
AUGUST		
SEPTEMBER		
OCTOBER		
NOVEMBER		
DECEMBER		
Annual Total	37.25	1.20

2020		
	Total	AVERAGE
JANUARY		
FEBRUARY		
MARCH		
APRIL		
MAY		
JUNE		
JULY		
AUGUST	1.09	0.16
SEPTEMBER		
OCTOBER		
NOVEMBER		
DECEMBER		
Annual Total	1.09	0.16

2021		
	Total	AVERAGE
JANUARY	0.52	0.07
FEBRUARY	2.22	0.08
MARCH	4.22	0.14
APRIL	1.12	0.04
MAY	0.89	0.03
JUNE	3.37	0.11
JULY	3.9	0.13
AUGUST	3.6	0.12
SEPTEMBER	4.53	0.15
OCTOBER	3.94	0.13
NOVEMBER	3.73	0.12
DECEMBER	0.51	0.07
Annual Total	32.55	0.10

2022		
	Total	AVERAGE
JANUARY		
FEBRUARY		
MARCH		
APRIL		
MAY		
JUNE		
JULY		
AUGUST		
SEPTEMBER		
OCTOBER		
NOVEMBER		
DECEMBER		
Annual Total	0	#DIV/0!

VENDOR SORT KEY	DESCRIPTION	FUND	DEPARTMENT	AMOUNT

FUND TOTALS		
50	WATER FUND	110,288.93
60	SEWER FUND	79,085.87
	GRAND TOTAL:	189,374.80

TOTAL PAGES: 4

APPROVED BY: _____

APPROVED BY: _____

Note:

Highlighted invoice for the R&R Project;

Highlighted invoice for the Collection System Project

VENDOR SORT KEY	DESCRIPTION	FUND	DEPARTMENT	AMOUNT
			TOTAL:	1,370.00
SHENANDOAH SALES & SERVICE, INC.	WATER VEHICLE	WATER FUND	WATER	541.60
	SEWER VEHICLE	SEWER FUND	SEWER	1,194.12
	SEWER VEHICLE	SEWER FUND	SEWER	456.58
	SEWER VEHICLE	SEWER FUND	SEWER	524.40
	SEWER VEHICLE	SEWER FUND	SEWER	98.00
			TOTAL:	2,814.70
ROBBIE SHIPE	PERDIEM 3/06 - 3/11/22	SEWER FUND	SEWER	295.00
			TOTAL:	295.00
SUEZ TREATMENT SOLUTIONS, INC	LAMP, BALLAST	SEWER FUND	SEWER	3,183.58
			TOTAL:	3,183.58
GERALD TAYLOR CO., INC.	VAC / TRANSPORT	WATER FUND	WATER	233.10
	VAC / TRANSPORT	WATER FUND	WATER	1,028.35
			TOTAL:	1,261.45
THE CI THORNBURG CO, INC.	5/8"X3/4"X7" AYM 728-207WX	WATER FUND	WATER	1,074.03
	520M M2 MXU TRNSCVR SNGLPR	WATER FUND	WATER	6,076.74
	4"OMNIC2100CGAMR10GPULSETR	WATER FUND	WATER	4,228.10
	VALVE SERVICES	WATER FUND	WATER	800.00
	3/4"AYM76101FIPT X FIPT BL	WATER FUND	WATER	2,567.01
	CHLORINE	WATER FUND	WATER	1,713.00
	5/8"X3/4"SRIITRPL100GPL/BT	WATER FUND	WATER	5,147.69
			TOTAL:	21,606.57
TIAA COMMERCIAL FINANCE, INC	PLOTTER	WATER FUND	NON-DEPARTMENTAL	2,129.02
	PLOTTER	WATER FUND	WATER	210.98
			TOTAL:	2,340.00
US PAVING, LLC	12/14 & 12/17/21 PAVING	WATER FUND	WATER	7,035.00
	12/20/21 PAVING	WATER FUND	WATER	5,520.00
	12/29 & 12/30/21 CONCRETE	WATER FUND	WATER	1,620.00
	12/14 & 12/17/21 PAVING	SEWER FUND	SEWER	500.00
	12/20/21 PAVING	SEWER FUND	SEWER	4,200.00
	12/29 & 12/30/21 CONCRETE	SEWER FUND	SEWER	3,600.00
			TOTAL:	22,475.00
USA BLUEBOOK	2-1/2"FLOWTESTINGDIFFUSERK	WATER FUND	WATER	1,213.40
			TOTAL:	1,213.40
WV WATER DEVELOPMENT AUTHORITY	#2017-175 INFRSTRCTR FNDPR	SEWER FUND	NON-DEPARTMENTAL	415.63
			TOTAL:	415.63
XYLEM DEWATERING SOLUTIONS, INC	SVC CLL GODWIN@ WTP	WATER FUND	WATER	1,295.87
	SVC CLL GODWIN@ RIVERPMP	WATER FUND	WATER	600.00
	SVC CLL GODWIN@ TUSC	SEWER FUND	SEWER	600.00
	256MM CD103 IMPELLER	SEWER FUND	SEWER	1,812.50
	4" CKVLV W150# FLANGE	SEWER FUND	SEWER	1,251.01
			TOTAL:	5,559.38

VENDOR SORT KEY	DESCRIPTION	FUND	DEPARTMENT		AMOUNT
	W/E 2/06/22	SEWER FUND	SEWER		988.70
	W/E 2/13/22	SEWER FUND	SEWER		843.96
	W/E 2/20/22	SEWER FUND	SEWER		1,726.89
				TOTAL:	5,879.67
GWIN DOBSON & FOREMAN INC	WA SYS FACILITY PLAN UPDAT	WATER FUND	WATER		6,845.00
	WA RETAINER SVCS	WATER FUND	WATER		368.55
	WWTP UPGRADE	SEWER FUND	NON-DEPARTMENTAL		8,850.38
				TOTAL:	16,063.93
HACH COMPANY	METER FOR CTWWTP LAB	SEWER FUND	SEWER		1,447.07
				TOTAL:	1,447.07
JNO S SOLENBERGER & CO., INC	MISC FOR TWWTP	SEWER FUND	SEWER		498.42
				TOTAL:	498.42
J.C. KUNKLE & ASSOCIATES, A.C.	CPACRT SR2022ACMBWASWR RFN	WATER FUND	WATER		375.00
	CPACRT SR2022ACMBWASWR RFN	SEWER FUND	SEWER		375.00
				TOTAL:	750.00
MCKINNEY'S AUTO REPAIR	WATER TRUCK	WATER FUND	WATER		134.64
				TOTAL:	134.64
MICRO-TECH DESIGNS, INC.	ENGNRNG CTWWTP ATDLR,ARTNV	SEWER FUND	SEWER		1,406.00
				TOTAL:	1,406.00
MISS UTILITY OF WV, INC.	MESSAGE FEES: JAN	WATER FUND	WATER		261.80
				TOTAL:	261.80
NB & C ENGINEERING SERVICES, LLC	KEYESFRRYRD WT FR SHENTEL	WATER FUND	WATER		1,100.00
	KEYESFRRYRD WT FR TELEGIA	WATER FUND	WATER		800.00
				TOTAL:	1,900.00
LOGICAL CONCEPTS, INC	LLOYDS FLATS 1-12	SEWER FUND	SEWER		7.26
	PARK PS: BACKUP UNIT	SEWER FUND	SEWER		92.00
				TOTAL:	99.26
PACE ANALYTICAL SERVICES, LLC	TESTING: JCPSD IU04 QTRLY	SEWER FUND	SEWER		80.00
	TESTING: RT QRTRLY	SEWER FUND	SEWER		55.00
	TESTING: CT WEEKLY	SEWER FUND	SEWER		186.00
	TESTING: CT QRTLY SLDG	SEWER FUND	SEWER		67.00
				TOTAL:	388.00
PRECISION PUMP & VALVE SERVICE, INC.	MISC FOR TWWTP	SEWER FUND	SEWER		3,721.00
				TOTAL:	3,721.00
RK & K ENGINEERS	TO5 SEWER MODEL	SEWER FUND	NON-DEPARTMENTAL		3,699.73
	TO12FOREST AVE/FAIRFAX CRS	SEWER FUND	NON-DEPARTMENTAL		5,520.51
	TO18 WNDY'S PS UPGRADE	SEWER FUND	NON-DEPARTMENTAL		104.95
	TO19 2021 CLLCTNSYSTM PRJC	SEWER FUND	NON-DEPARTMENTAL		10,401.90
				TOTAL:	19,727.09
ROSS H BARE	SVC CLL PARK PS	SEWER FUND	SEWER		500.00
				TOTAL:	500.00
SG PLUMBING, INC.	128 TALL OAK DR 2/16/22	WATER FUND	WATER		1,370.00

VENDOR SORT KEY	DESCRIPTION	FUND	DEPARTMENT		AMOUNT
120WATER	PWS EXPRT & CNSLTASST & KI	WATER FUND	WATER		12,488.50
	PWSPRO & KIT	WATER FUND	WATER		10,056.00
				TOTAL:	22,544.50
APPLE VALLEY TIRE	SEWER TRUCK TIRES	SEWER FUND	SEWER		1,784.12
				TOTAL:	1,784.12
ARDEN EQUIPMENT REPAIR, INC.	SVC Z-TRCK 60" DECK	WATER FUND	WATER		703.78
	SVC JD 0 TURN	WATER FUND	WATER		1,082.55
	SVC JD 0 TURN	SEWER FUND	SEWER		1,082.55
				TOTAL:	2,868.88
ASSURED PARTNERS	DEC COURSE, MILEAGE, LODGI	WATER FUND	WATER		311.69
	DEC COURSE, MILEAGE, LODGI	SEWER FUND	SEWER		311.69
				TOTAL:	623.38
CEDARCHEM, LLC	2,000G CEDARCLEAR 1757	WATER FUND	WATER		10,424.60
				TOTAL:	10,424.60
CHARLES TOWN SEWER	JANUARY FUNDING	SEWER FUND	NON-DEPARTMENTAL		13,471.24
				TOTAL:	13,471.24
CHARLES TOWN WATER	JANUARY FUNDING	WATER FUND	NON-DEPARTMENTAL		8,970.62
				TOTAL:	8,970.62
CITIBANK, N.A.	PRONOUNCEMENT	WATER FUND	NON-DEPARTMENTAL		972.53
				TOTAL:	972.53
CORE & MAIN	C14-33QNL3/4CPLG,C14-44-Q-	WATER FUND	WATER		642.24
	C14-44-Q-NL1CPLG,C86-44QNL	WATER FUND	WATER		729.60
	C16-44QNLCPLGFIPXQJ, 721-2	WATER FUND	WATER		252.90
	C16-33NLFIPXPJIPSCPL, 721-	WATER FUND	WATER		353.52
	FLANGE KITS WTP	WATER FUND	WATER		1,160.56
	7"MAXADAPTOR SEWER 4THAVE	SEWER FUND	SEWER		1,296.64
	MAX-4CLAY/DI/AC/CI/PLCPLG,	SEWER FUND	SEWER		1,337.24
				TOTAL:	5,772.70
COYNE CHEMICAL	HYDROFLUOSILICIC ACID 23%W	WATER FUND	WATER		1,137.35
	AMMONIUMSULFATE40%, CP-837	WATER FUND	WATER		4,069.91
				TOTAL:	5,207.26
WV DEPT OF HEALTH & HUMAN SERVICES	BACTERIOLOGICAL TEST	WATER FUND	WATER		140.00
				TOTAL:	140.00
FREDERICKTOWNE LABS INC	FEB WK1 OUTLET001	SEWER FUND	SEWER		378.90
	FEB WK2 OUTLET001	SEWER FUND	SEWER		377.10
	FEB RCKWL IU02	SEWER FUND	SEWER		343.80
				TOTAL:	1,099.80
FRONTIER COMMUNICATIONS	304-876-2120-111514-4	WATER FUND	WATER		91.79
	304-876-9970-121914-4	WATER FUND	WATER		91.79
				TOTAL:	183.58
GUTTMAN ENERGY	W/E 2/06/22	WATER FUND	WATER		899.73
	W/E 2/13/22	WATER FUND	WATER		893.65
	W/E 2/20/22	WATER FUND	WATER		526.74