Notice of Meeting of the Main Street Advisory Board of the City of Georgetown, Texas November 13, 2026

The Georgetown Main Street Advisory Board will meet on November 13, 2026 at 9:00 AM at Downtown Development and Special Event Offices at 505 S Austin Ave, Georgetown, TX 78626.

The City of Georgetown is committed to compliance with the Americans with Disabilities Act (ADA). If you require assistance in participating at a public meeting due to a disability, as defined under the ADA, reasonable assistance, adaptations, or accommodations will be provided upon request. Please contact the City Secretary's Office, at least three (3) days prior to the scheduled meeting date, at (512) 930-3652 or City Hall at 808 Martin Luther King Jr. Street, Georgetown, TX 78626 for additional information; TTY users route through Relay Texas at 711.

Public Wishing to Address the Board

On a subject that is posted on this agenda: Please fill out a speaker registration form which can be found on the table at the entrance to the meeting room. Clearly print your name and the letter of the item on which you wish to speak and present it to the Board Liaison prior to the start of the meeting. You will be called forward to speak when the Board considers that item. Only persons who have delivered the speaker form prior to the meeting being called to order may speak. Speakers will be allowed up to three minutes to speak. If you wish to speak for six minutes, it is permissible to use another requestor's granted time to speak. No more than six minutes for a speaker may be granted. The requestor granting time to another speaker must also submit a form and be present at the meeting.

On a subject not posted on the agenda: A request must be received by the Advisory Board or Commission Liaisor prior to the day the agenda for this meeting is posted. Each speaker will be given three minutes to address the Board or Commission members. No action can be taken.

Regular Session

1.A Call to order
Call to order - Evan Cuyler, Board Chair

1.B Approval of minutes
Consideration and approval of the October 9, 2026 minutes - Evan Cuyler, Board Chair

1.C Approval of minutes
Consideration and approval of the October 21, 2026 minutes - Evan Cuyler, Board Chair

1.D Board Volunteer Time
Record board volunteer time – Rachel White, Downtown Development Manager

1.E Elect a Board Vice Chair
Consideration and possible action to elect a Vice Chair - Evan Cuyler, Board Chair

1.F Main Street Sign Grant request for 216 W 8th Street.
Consideration and possible action on a Main Street Sign Grant request for 216 W 8th Street – Rachel White, Downtown Development Manager

1.G Project Team & Partner Updates
Discussion on Project Teams, Partner updates, and BRE Visits - Evan Cuyler, Board Chair

1.H Staff Report
Staff Report – Rachel White, Downtown Development Manager

Adjournment

Certificate of Posting

I, Robyn Densmore, City Secretary for the City of Georgetown, Texas, do hereby certify that this Notice of Meeting was posted at City Hall, 808 Martin Luther King Jr. Street, Georgetown, TX 78626, a place readily accessible to the general public as required by law, on the _____ day of _____, 2026, at _____, and remained so posted for at least three business days preceding the scheduled time of said meeting.

_____
Robyn Densmore, City Secretary

City of Georgetown, Texas
Main Street Advisory Board
November 13, 2026

SUBJECT:
Call to order

SUGGESTED ACTION:
Call to order - Evan Cuyler, Board Chair

ITEM SUMMARY:

FINANCIAL IMPACT:

SUBMITTED BY:
Shelly Sommerfeld, Economic Development plus

ATTACHMENTS:

N/A

City of Georgetown, Texas
Main Street Advisory Board
November 13, 2026

SUBJECT:
Approval of minutes

SUGGESTED ACTION:
Consideration and approval of the October 9, 2026 minutes - Evan Cuyler, Board Chair

ITEM SUMMARY:

FINANCIAL IMPACT:

SUBMITTED BY:
Shelly Sommerfeld, Economic Development plus

ATTACHMENTS:
10.9.2026 Main St Minutes - draft.pdf

Minutes of the
Main Street Advisory Board
City of Georgetown, Texas
Friday, October 9, 2026

The Georgetown Main Street Advisory Board met on Friday, October 9, 2026 at 9:00 AM at Downtown Development and Special Event Offices at 505 S Austin Ave, Georgetown, TX 78626.

The City of Georgetown is committed to compliance with the Americans with Disabilities Act (ADA). If you require assistance in participating at a public meeting due to a disability, as defined under the ADA, reasonable assistance, adaptations, or accommodations will be provided upon request. Please contact the City Secretary's Office, at least three (3) days prior to the scheduled meeting date, at (512) 930-3652 or City Hall at 808 Martin Luther King, Jr Street for additional information; TTY users route through Relay Texas at 711.

The following Members were in attendance:
Present were: Michele D Jaroszewski-webb, Markus Lindsey, Jaime M Manuel Aguilar, Shelley Rodocker

Markus ran the meeting in Evan's absence.

Public Wishing to Address the Board

On a subject that is posted on this agenda: Please fill out a speaker registration form which can be found on the table at the entrance to the meeting room. Clearly print your name and the letter of the item on which you wish to speak and present it to the Board Liaison prior to the start of the meeting. You will be called forward to speak when the Board considers that item. Only persons who have delivered the speaker form prior to the meeting being called to order may speak. Speakers will be allowed up to three minutes to speak. If you wish to speak for six minutes, it is permissible to use another requestor's granted time to speak. No more than six minutes for a speaker may be granted. The requestor granting time to another speaker must also submit a form and be present at the meeting.
On a subject not posted on the agenda: A request must be received by the Advisory Board or Commission Liaison prior to the day the agenda for this mee ng is posted. Each speaker will be given three minutes to address the Board or Commission members. No action can be taken.

1. Regular Session

1.A Call to order
Call to order – Markus Lindsey, Board Vice Chair
at 9:01am

1.B Welcome & Introductions

Welcome and Introduction of Staff and New Board Members - Rachel White, Downtown Development Manager

Staff and board members introduced themselves.

1.C Elect a Board Secretary

Consideration and possible action to elect a Secretary – Markus Lindsey, Board Vice Chair

Moved by Shelley Rodocker; seconded by Jaime M Manuel Aguilar to Approve Michele volunteered to take on the role of Board Secretary. **Motion** Approved: 4- 0

Voting For: Michele D Jaroszewski-webb, Markus Lindsey, Jaime M Manuel Aguilar, Shelley Rodocker
Voting Against: None

1.D Approval of minutes

Consideration and approval of the September 11, 2026 minutes – Markus Lindsey, Board Vice Chair

Moved by Michele D Jaroszewski-webb; seconded by Jaime M Manuel Aguilar to Approve .
Motion Approved: 4- 0
Voting For: Michele D Jaroszewski-webb, Markus Lindsey, Jaime M Manuel Aguilar, Shelley Rodocker
Voting Against: None

1.E Approval of minutes

Consideration and approval of the September 17, 2026 minutes – Markus Lindsey, Board Vice Chair

Moved by Michele D Jaroszewski-webb; seconded by Jaime M Manuel Aguilar to Approve .
Motion Approved: 4- 0
Voting For: Michele D Jaroszewski-webb, Markus Lindsey, Jaime M Manuel Aguilar, Shelley Rodocker
Voting Against: None

1.F Board Volunteer Time

Record board volunteer time – Rachel White, Downtown Development Manager

Board members entered in their volunteer time.

1.G Main Street Facade Grant Request for 212 W 7th.

Consideration and possible action on a Main Street Facade Grant request for 212 W 7th - Rachel White, Downtown Development Manager

This item was moved to the 2nd item to accommodate the guests present for grant request.

Moved by Jaime M Manuel Aguilar; seconded by Michele D Jaroszewski-webb to Approve a Facade grant in the amount of $18,971.88. . **Motion** Approved: 4- 0

Voting For: Michele D Jaroszewski-webb, Markus Lindsey, Jaime M Manuel Aguilar, Shelley Rodocker
Voting Against: None

1.H 2026 Holiday Ornament

Consideration and possible action to approve the 2026 Holiday Ornament pricing - Rachel White, Downtown Development Manager

Moved by Jaime M Manuel Aguilar; seconded by Shelley Rodocker to Approve an update to the pricing of the 2026 Holiday ornament to $30.. **Motion** Approved: 4- 0

Voting For: Michele D Jaroszewski-webb, Markus Lindsey, Jaime M Manuel Aguilar, Shelley Rodocker
Voting Against: None

1.I Project Team & Partner Updates

Discussion on Project Teams, Partner updates, and BRE Visits – Markus Lindsey, Board Vice Chair

- Coffee Cocoa Crawl - board and staff discussed marketing for the event.
- Georgetown Swirl - this year's event will be on March 6, 2027.
- Breakfast Bites - November 17th will be the next meeting. Very 1st sponsorship for this event will be SouthStar Bank. Staff is looking for a board volunteer to moderate the panel.
- Texas Historical Commission will be here on November 18th - staff will share the agenda once it has been finalized.
- BRE - staff visited with 309 Coffee.

1.J Staff Report

Staff Report – Rachel White, Downtown Development Manager

- Downtown Development
  - Atmos is going to be doing some gas line work. Tearing up 11th and Rock. Then along Austin Ave, staff has requested that this work be staggered. Starts in a few weeks and will go until the 1st of the year.
  - Waste water line work behind City Post will be going on for a week or 2.
  - Wayfinding signage preparation will starting soon for installation by the end of the year.
  - Call for art for artwork over in the Light & Water Works District for the screen wall to replace the fencing on the south side of the building.
  - Sidewalk improvements are still underway.

Adjournment

Moved by Shelley Rodocker; seconded by Jaime M Manuel Aguilar to Adjourn at 10:06am.
Motion Adjourn: 4 - 0

Voting For: Michele D Jaroszewski-webb, Markus Lindsey, Jaime M Manuel Aguilar, Shelley Rodocker
Voting Against: None

These minutes were approved at the meeting of _____

_____
Chair

_____
Attest

City of Georgetown, Texas
Main Street Advisory Board
November 13, 2026

SUBJECT:
Approval of minutes

SUGGESTED ACTION:
Consideration and approval of the October 21, 2026 minutes - Evan Cuyler, Board Chair

ITEM SUMMARY:

FINANCIAL IMPACT:

SUBMITTED BY:
Shelly Sommerfeld, Economic Development plus

ATTACHMENTS:
10.21.2026 Main St Minutes - draft.pdf

Minutes of the
Main Street Advisory Board
City of Georgetown, Texas
Wednesday, October 21, 2026

The Georgetown Main Street Advisory Board met on Wednesday, October 21, 2026 at 8:30 AM at Downtown Development and Special Event Offices at 505 S Austin Ave, Georgetown, TX 78626.

The City of Georgetown is committed to compliance with the Americans with Disabilities Act (ADA). If you require assistance in participating at a public meeting due to a disability, as defined under the ADA, reasonable assistance, adaptations, or accommodations will be provided upon request. Please contact the City Secretary's Office, at least three (3) days prior to the scheduled meeting date, at (512) 930-3652 or City Hall at 808 Martin Luther King, Jr Street for additional information; TTY users route through Relay Texas at 711.

This is a special board meeting for matters requiring timely discussion and Board action.

The following Members were in attendance:
Present were: Karin Sladek, Michele D Jaroszewski-webb, Evan Cuyler, Markus Lindsey

This is a special meeting for the Main St Advisory Board

Public Wishing to Address the Board

On a subject that is posted on this agenda: Please fill out a speaker registration form which can be found on the table at the entrance to the meeting room. Clearly print your name and the letter of the item on which you wish to speak and present it to the Board Liaison prior to the start of the meeting. You will be called forward to speak when the Board considers that item. Only persons who have delivered the speaker form prior to the meeting being called to order may speak. Speakers will be allowed up to three minutes to speak. If you wish to speak for six minutes, it is permissible to use another requestor's granted time to speak. No more than six minutes for a speaker may be granted. The requestor granting time to another speaker must also submit a form and be present at the meeting.
On a subject not posted on the agenda: A request must be received by the Advisory Board or Commission Liaisor prior to the day the agenda for this meeting is posted. Each speaker will be given three minutes to address the Board or Commission members. No action can be taken.

1. Regular Session

1.A Call to order
Call to order - Evan Cuyler, Board Chair
at 8:31am

1.B Main Street Facade Grant request for 700 S Austin Avenue.
Consideration and possible action on a Main Street Facade Grant request for 700 S Austin Ave – Rachel White, Downtown Development Manager

Moved by Michele D Jaroszewski-webb; seconded by Markus Lindsey to Approve at Facade Grant in the amount of $10,000.
Motion Approved: 4- 0
Voting For: Karin Sladek, Michele D Jaroszewski-webb, Evan Cuyler, Markus Lindsey
Voting Against: None

Adjournment

Moved by Markus Lindsey; seconded by Michele D Jaroszewski-webb to Adjourn at 8:38 am.
Motion Adjourn: 4 - 0
Voting For: Karin Sladek, Michele D Jaroszewski-webb, Evan Cuyler, Markus Lindsey
Voting Against: None

These minutes were approved at the meeting of _____

_____ Chair

_____ Attest

City of Georgetown, Texas
Main Street Advisory Board
November 13, 2026

SUBJECT:
Board Volunteer Time

SUGGESTED ACTION:
Record board volunteer time – Rachel White, Downtown Development Manager

ITEM SUMMARY:
Board members will input their monthly volunteer hours for Main Street as part of annual tracking.

FINANCIAL IMPACT:

SUBMITTED BY:
Shelly Sommerfeld, Economic Development plus

ATTACHMENTS:

N/A

City of Georgetown, Texas
Main Street Advisory Board
November 13, 2026

SUBJECT:
Elect a Board Vice Chair

SUGGESTED ACTION:
Consideration and possible action to elect a Vice Chair - Evan Cuyler, Board Chair

ITEM SUMMARY:

FINANCIAL IMPACT:

SUBMITTED BY:
Shelly Sommerfeld, Economic Development plus

ATTACHMENTS:

N/A

City of Georgetown, Texas
Main Street Advisory Board
November 13, 2026

SUBJECT:
Main Street Sign Grant request for 216 W 8th Street.

SUGGESTED ACTION:
Consideration and possible action on a Main Street Sign Grant request for 216 W 8th Street – Rachel White, Downtown Development Manager

ITEM SUMMARY:

FINANCIAL IMPACT:

SUBMITTED BY:
Shelly Sommerfeld, Economic Development plus

ATTACHMENTS:
Facade & Sign Application Packet- 216 W 8th St.pdf

- Coversheet -

Main Street Program – Façade & Sign Grant Fund
Friday, November 13, 2026
216 W 8th Street

AGENDA ITEM DESCRIPTION
Discussion and possible action on a Main Street Sign Grant Fund application request for the property located at 216 W 8th Street.

Eligible sign grant improvements include the installation of a new illuminated blade sign.

The applicant has selected Robert's Printing Company to perform the listed work. The sign estimate provided by the applicant totals **$6,634** for the improvements and the applicant seeks a grant for the maximum award they are eligible for **50% or up to $2,500.** (maximum award possible).

AGENDA ITEM DETAILS

- Business Name: Gold Bird Enterprises/The Draper
- Applicant: Brad Strittmatter
- Property Owner: John Hoyt
- Property Address: 216 W. Eighth Street
- Historical/Current Building Name: Edward's Building
- Historic Overlay: Williamson County Courthouse Historic District
- Application History: This is the first review for this application

ECONOMIC IMPACT
Extended hours of operation: Yes
First Floor Use: Yes- Office/Bar
Occupy a Vacant Structure: N/A
Sales Subject to Sales Tax: Yes
Capital Expenditures: The applicant is investing over $100,000 in total project improvements.

HISTORIC PRESERVATION
Date of construction: 1920
2016 Historic Resources Survey Level of Priority: High
National Register Designation: Contributing

Texas Historical Commission Designation: NA

LOCATION
On the Square vs. Off the Square: The property does face the Courthouse and is considered to be off the Square.

STAFF ANALYSIS
Staff has met with the applicant and reviewed the application in its entirety and finds that the request is complete and eligible for funding consideration by the Main Street Advisory Board. This application is pending approval for a COA.

ATTACHMENTS
Exhibit A – Application and backup materials

SUBMITTED BY
Rachel White, Downtown Development Manager

GEORGETOWN
TEXAS
more than welcome

Advisory Board Review
Approved_____
Rejected_____
Date_____

FAÇADE & SIGN REIMBURSEMENT GRANT PROGRAM APPLICATION

Please e-mail the completed application with necessary attachments and signatures to the Downtown & Tourism Department: mainstreet@georgetowntexas.gov, no later than the THURSDAY before the first Friday of each month. If you have any grant application questions, please contact the Downtown Development Manager at 512/930-1720. If you have any building or sign permit/historic preservation questions, contact the Historic District Planner at 512/930-3581.

- Applicant Name Brad Strittmatter Date 11/04/26
- Business Name Gold Bird Enterprises, dab The Draper
- Mailing Address 216 W 8th Street Georgetown TX 78626
- Contact Phone 832-607-4778 Email Address brad@festrunk.com
- Building Owner *(if different from applicant)* John Hoyt
- Historical/Current Building Name _____
- Physical Building Address 216 W 8th Street, Georgetown TX 78626
- Type of Work: *(check all that apply)*
  Sign ■ Paint ☐ Masonry cleaning/paint removal ☐ Awning/Canopy ☐ Fire Sprinklers or Suppression Systems ☐
  Uncovering/replacing windows ☐ Roof work ☐ Foundation work ☐ Removal of barriers to public accessibility ☐
  Other: _____
- Details of Planned Improvements for Façade & Sign Reimbursement Grant: *(attach additional information if necessary)*
  We are installing a blade sign on the front of the building. We believe this will not only help our business, but improve foot traffic on this block for all businesses.
- How will this project benefit downtown? (Check all that apply)
  Extended business hours ■ First floor usage ■ Occupying vacant/underutilized structure ■ Local Contractor ■
  Subject to sales tax ■ Enhance historic significance ☐ Location is on the square ☐ Location is off the square ■
- List Contractor/Project Architect Proposals and Total Amounts of Eligible Expenses *(attach original proposals)*:

1. Roberts Printing
2. _____
3. _____

- TOTAL COST OF PROPOSED GRANT PROJECT (CAPITAL EXPENDITURES): The sign is $6,634.64. The entire project exceeded $100,000
- AMOUNT OF FAÇADE AND/OR SIGN GRANT REQUESTED (MAY NOT EXCEED 50% OF TOTAL GRANT COSTS: $2,500 SIGN MAX, $20,000 FACADE MAX): $2,500

Include all required color samples of paint fabric canopy, sign design, etc., as well as digital photographs of building's exterior, roof and foundation if applicable to grant.

_____

Applicant's Signature ***Date***

GEORGETOWN
TEXAS
more than welcome

FAÇADE & SIGN REIMBURSEMENT GRANT AGREEMENT FORM

Please e-mail the completed application with necessary attachments and signatures to Downtown & Tourism Department: mainstreet@georgetowntexas.gov, no later than the Thursday before the first Friday of each month. If you have any grant application questions, please contact the Downtown Development Manager at 512/930-1720. If you have any historic preservation questions, contact the Historic District Planner at 512/930-3581.

I have met with the Georgetown Downtown Development Manager, and I fully understand the Façade & Sign Reimbursement Grant Procedures and Details established by the Georgetown Main Street Advisory Board. I intend to use this grant program for the aforementioned renovation projects to forward the efforts of the downtown revitalization and historic preservation program known as the Georgetown Main Street Program. I have not received, nor will I receive insurance monies for this revitalization project.

I have read the Façade & Sign Reimbursement Grant Application Procedures including the Façade & Sign Reimbursement Grant Details.

I understand that if I am awarded a Façade & Sign Reimbursement Grant by the Georgetown Main Street Advisory Board, any deviation from the approved project may result in the partial or total withdrawal of the Façade & Sign Reimbursement Grant. If the façade or sign is altered for any reason within **one (1) year** from construction, I may be required to reimburse the City of Georgetown immediately for the full amount of the Façade & Sign Reimbursement Grant.

Gold Bird Enterprises
Business/Organization Name

[signature] Brad Strittmatter 11/4/26
Applicant's Signature *Printed Name* *Date*

[signature] 11-4-26
Building Owner's Signature (if different from applicant) Printed Name *Date*

This section to be completed by City Staff:

Georgetown HARC's Design Approval *Date*
(obtain signature of Historic District Planner, City Planning staff, or attach approved COA)

Georgetown Main Street Advisory Board's Approval *Date*

ROBERTS PRINTING CO. DESIGN • PRINTING • SIGNS
207 E. 8TH STREET
GEORGETOWN, TX 78626
512-863-2323



GEORGETOWN'S PREMIERE PRINTING & SIGN SHOP

D&L PRINTING
552 STADIUM DRIVE
GEORGETOWN, TX 78626
512-863-8145

MAIL PAYMENTS TO:
207 E 8TH ST., GEORGETOWN, TX 78626

Estimate

No: 23381

Date: 10/27/26
Customer PO:
Customer No: 11039

Bill To:

BRAD STRITTMATTE
THE DRAPPER

Quantity	Description	Amount
1	Double side push through blade sign 1'x6'x10 double side blade sign 1/2" white acrylic push through Gold translucent vinyl applied letters faces White LED's Cabinet painted matte brown INSTALL INCLUDES Mounting blade sign to build front Run sign electrical to inside of building Building power must be provided by client	$ 6,039.00
	Graphic Design	$ 90.00

Taken by: SUPPORT

SUBTOTAL	$ 6,129.00
TAX	$ 505.64
SHIPPING	$ 0.00
TOTAL	$ 6,634.64
AMOUNT DUE	$ 6,634.64

ACTUAL BLADE SIGN LOCATION



BLADE SIGN – SIGN SUBMITTAL WORK SHEET

PROJECT:	THE DRAPER
LOCATION:	216 W. 8th Street
SIGN TYPE:	BLADE SIGN (NON-ILLUMINATED FACE WITH INTERNAL LED)
QTY:	1
OVERALL SIZE:	6'-0" H x 12" W x 5" D
CONSTRUCTION:	ALUMINUM FABRICATED CABINET
FINISH:	MATTE BROWN
LETTERING:	PUSH THRU ACRYLIC LETTERS GOLD
ILLUMINATION:	INTERNAL LED
MOUNTING:	(2) WALL MOUNT BRACKETS
ELECTRICAL:	120V PRIMARY – SEE ELECTRICAL DETAILS
NOTES:	SIGN TO BE UL LISTED

FRONT VIEW

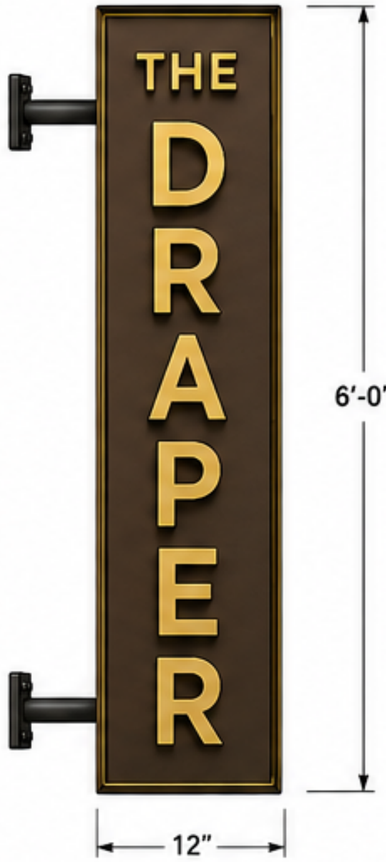

SIDE VIEW



MOUNTING SIDE VIEW



SPECIFICATIONS

- **Cabinet:** 0.063" Aluminum Fabricated Construction
- **Faces:** 0.090" Aluminum
- **Depth:** 5"
- **Lettering:** Push Thru 1/2" Gold Acrylic Letters
- **Illumination:** Internal LED Modules (White 6500K)
- **Trim Cap:** 1" Gold Aluminum Retainer
- **Mounting:** (2) Heavy Duty Steel Wall Brackets
- **Finish:** Matte Brown (All Visible Surfaces)
- **Electrical:** 120V, 60Hz, UL Listed Components
- **Warranty:** 3 Years on LEDs
  1 Year on Sign

TOP VIEW

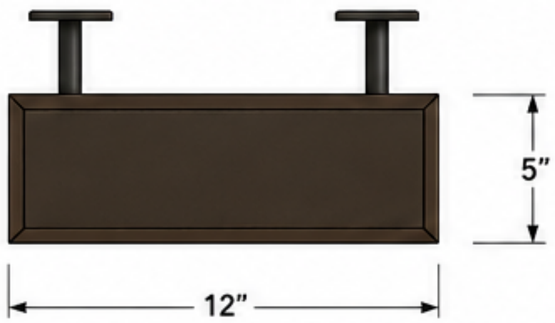

LETTER DETAIL (FRONT VIEW)

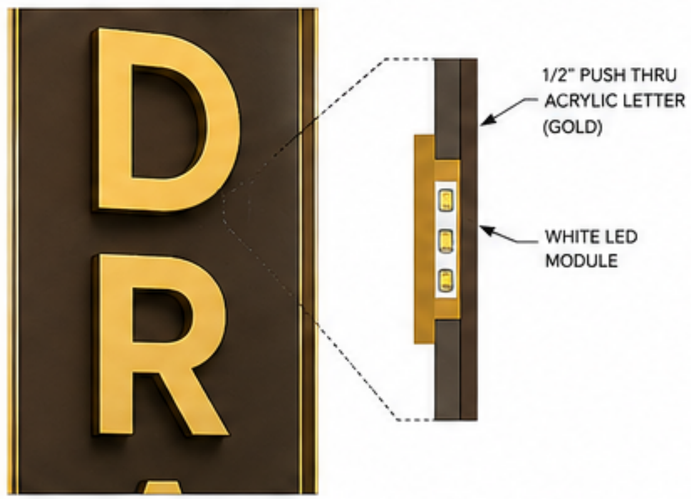

ELECTRICAL DIAGRAM

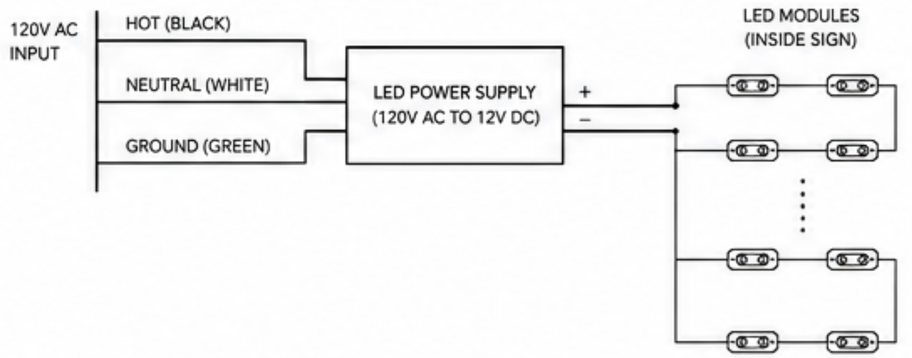

NOTE:
ALL ELECTRICAL COMPONENTS
UL LISTED

CERTIFICATE OF APPROPRIATENESS (COA)

ADMINISTRATIVE REVIEW

FILE NUMBER:	**2026-49-COA**
PROJECT NAME:	The Draper Storefront Lettering
APPLICANT:	Roberts Printing Company c/o John Montgomery
PROPERTY OWNER:	Brad Strittmatter
PROPERTY ADDRESS:	216 W 8th Street
LEGAL DESCRIPTION:	0.293 Acres of Lot 6-7(PTS), Block 50, City of Georgetown
REQUEST:	New signage, to include new signage that is inconsistent with an approved Master Sign Plan
EFFECTIVE DATE:	10/22/2026
EXPIRATION DATE*:	10/22/2028

This is to certify that pursuant to action by the City of Georgetown Historic & Architectural Review Commissioner (HARC) on the 22nd day of October 2026 the above referenced request for Certificate of Appropriateness (COA) was approved, as detailed below.

CERTIFICATE OF APPROPRIATENESS REQUEST DESCRIPTION

The applicant's request includes new signage, to include new signage that is inconsistent with an approved Master Sign Plan on a high priority structure in the Downtown Area I Overlay District. Per Section 3.13 of the Unified Development Code, HARC is the decision-making body for the items listed above.

The following list and attached documents represent the complete scope of work approved by the HPO:

- New signage, to include new signage that is inconsistent with an approved Master Sign Plan (illuminated blade sign)

The following conditions were met by the applicant as determined by the City of Georgetown Historic & Architectural Review Commission:

1. The application submitted was complete and the information contained within the application correct and sufficient to allow adequate review and final action.
2. Applicable design and development standards of the Unified Development Code and Historic District Design Guidelines in Chapter 5 specific to the applicable Historic Overlay District.

This Certificate is revocable and does not confer any permanent rights. This Certificate expires 24 months from the effective date if the approved work has not commenced.

10/22/2026

Allyson Iiams

FOR: Allyson Iiams, Historic Preservation Officer
Attachment: Plans and Supporting Documents

DISCLOSURE AND ACKNOWLEDGEMENT OF THE APPROVED SCOPE OF WORK

Please note that this Approval Memo alone *does not permit you to commence work on the approved scope of work outlined above*. To determine the appropriate building permit application(s) that will be required for the approved scope of work outlined above, please reach out (see Helpful Links & Contact Information page below) directly to the City of Georgetown, Building Permits Department at permits@georgetowntexas.gov. Once you define your building permit application(s), please ensure that this signed Approval Memo (Historic Preservation Officer signature and Applicant signature) is a required submittal document that should accompany any building permit application(s) you apply for relating to the approved scope of work outlined above.

Should the approved scope of work change, or you encounter an unscoped/unapproved demolition, you are required to contact staff at both historic@georgetowntexas.gov and permits@georgetowntexas.gov to discuss next steps. A change in the approved scope of work may require an additional Certificate of Appropriateness that may require HARC approval.

Per Section 3.13.050. of the UDC:
It shall be the responsibility of the Historic Preservation Officer to issue the actual Certificate of Appropriateness following approval by the Historic Preservation Officer or the HARC, with any designated conditions, and to maintain a copy of the Certificate of Appropriateness, together with the proposed plans. The certificate shall be forwarded to the Building Official. These shall be public documents for all purposes.

Work performed pursuant to the issuance of a Certificate of Appropriateness shall conform to the requirements of the certificate. In the event that work is not in compliance, the Building Official shall issue a stop work order and/or citation as prescribed by ordinance.

Upon your review of this Approval Memo and the above Disclosure and Acknowledgement of the Approved Scope of Work, please sign/date below and upload the signed copy of this Approval Memo to your project (COA) in MGO Connect (http://www.mgoconnect.org).

Signed this ___ day of October, 2026

_____

APPLICANT SIGNATURE/DATE

HELPFUL LINKS & CONTACT INFORMATION

Main Webpage: Building Permits and Inspections

MGO Connect Guidance (Permitting): MGO Connect Instructions

Building Inspections Address: 300-1 Industrial Ave., Georgetown, TX

Hours of Operation: 8 a.m.-5 p.m. Monday-Friday

General questions: permits@georgetown.org

Main Line: (512) 930-2550

Issued/Permits under review (include permit/project number and address): planreview@georgetown.org

ROBERTS PRINTING COMPANY

207 E 8TH Street

Georgetown, TX 78626

To Whom it may concern:

The purpose of this letter is to add a second sign to “THE DRAPER’s new location at 217 W 8TH STREET, Georgetown, TX 78626. The first sign is non-illuminated letters mounted onto the building.

The total square feet of the sign is 20.86 sqft. with a linear building frontage of 22.67 feet.

The second sign is a interior illuminated double sided blade sign with push through acrylic letters. The Blade sign will be attached to the wall using mortar joint anchors. The sign dimensions at 12” wide x 72” tall x 5” thick. Sign Message will be the “THE” Horizontally followed by the word “DRAPER” Vertically. All lettering is white with soft white LED’s.

Thank you,



John Montgomery- Owner

City of Georgetown, Texas
Main Street Advisory Board
November 13, 2026

SUBJECT:
Project Team & Partner Updates

SUGGESTED ACTION:
Discussion on Project Teams, Partner updates, and BRE Visits - Evan Cuyler, Board Chair

ITEM SUMMARY:

FINANCIAL IMPACT:

SUBMITTED BY:
Shelly Sommerfeld, Economic Development plus

ATTACHMENTS:

N/A

City of Georgetown, Texas
Main Street Advisory Board
November 13, 2026

SUBJECT:
Staff Report

SUGGESTED ACTION:
Staff Report – Rachel White, Downtown Development Manager

ITEM SUMMARY:
Facade Grant Fund update, Business & Development updates and Upcoming event dates to remember.

FINANCIAL IMPACT:

SUBMITTED BY:
Shelly Sommerfeld, Economic Development plus

ATTACHMENTS:

N/A