Notice of Meeting of the Zoning Board of Adjustment of the City of Georgetown, Texas November 17, 2026

The Georgetown Zoning Board of Adjustment will meet on November 17, 2026 at 5:00 PM at Council and Court Building, 510 W. 9th Street.

The City of Georgetown is committed to compliance with the Americans with Disabilities Act (ADA). If you require assistance in participating at a public meeting due to a disability, as defined under the ADA, reasonable assistance, adaptations, or accommodations will be provided upon request. Please contact the City Secretary's Office, at least three (3) days prior to the scheduled meeting date, at (512) 930-3652 or City Hall at 808 Martin Luther King Jr. Street, Georgetown, TX 78626 for additional information; TTY users route through Relay Texas at 711.

Public Wishing to Address the Board

On a subject that is posted on this agenda: Please fill out a speaker registration form which can be found on the table at the entrance to the meeting room. Clearly print your name and the letter of the item on which you wish to speak and present it to the Board Liaison prior to the start of the meeting. You will be called forward to speak when the Board considers that item. Only persons who have delivered the speaker form prior to the meeting being called to order may speak. Speakers will be allowed up to three minutes to speak. If you wish to speak for six minutes, it is permissible to use another requestor's granted time to speak. No more than six minutes for a speaker may be granted. The requestor granting time to another speaker must also submit a form and be present at the meeting.

On a subject not posted on the agenda: A request must be received by the Advisory Board or Commission Liaisor prior to the day the agenda for this meeting is posted. Each speaker will be given three minutes to address the Board or Commission members. No action can be taken.

Regular Session

1.A 2025-12-VARâ€"Crunch Fitness, Sign Variance

Public Hearing and possible action on a Zoning Variance to increase the maximum allowable wall-sign area from 197.00 square feet to 341.80 square feet for an additional 145.70 square feet wall sign, pursuant to Section 10.06.010 of the Unified Development Code, for the property located at 205 Jesse Cocke Drive, Georgetown, Texas 78628, bearing the legal description of 5.032 Acres, Lot 2, Block A, of the Lakeway Plaza Subdivision (2025-12-VAR). Matt Skawin, Planner

Adjournment

Certificate of Posting

I, Robyn Densmore, City Secretary for the City of Georgetown, Texas, do hereby certify that this Notice of Meeting was posted at City Hall, 808 Martin Luther King Jr. Street, Georgetown, TX 78626, a place readily accessible to the general public as required by law, on the _____ day of _____, 2026, at _____, and remained so posted for at least three business days preceding the scheduled time of said meeting.

_____

Robyn Densmore, City Secretary

City of Georgetown, Texas
Zoning Board of Adjustment
November 17, 2026

SUBJECT:
2025-12-VAR–Crunch Fitness, Sign Variance

SUGGESTED ACTION:
Public Hearing and possible action on a Zoning Variance to increase the maximum allowable wall-sign area from 197.00 square feet to 341.80 square feet for an additional 145.70 square feet wall sign, pursuant to Section 10.06.010 of the Unified Development Code, for the property located at 205 Jesse Cocke Drive, Georgetown, Texas 78628, bearing the legal description of 5.032 Acres, Lot 2, Block A, of the Lakeway Plaza Subdivision (2025-12-VAR). Matt Skawin, Planner

ITEM SUMMARY:
Overview of Applicants Request:
The applicant is requesting a variance to increase the maximum permitted wall sign area. The building already has a permitted 196.1 square foot front elevation sign, and the applicant seeks approval for a second side elevation sign measuring 145.7 square feet. Together, the signs total 341.8 square feet, exceeding the 197 square feet allowed based on the primary facade length. The variance would allow an additional 145.7 square feet beyond the limit established in Section 10.06.010 of the Unified Development Code.
Staffs Analysis:
The following are the pertinent sections of the Unified Development Code (UDC) related to this request:
UDC Section 10.06.010
Staff has reviewed the variance request and the applicants' stated findings, and has evaluated the request based on the UDC required findings for a variance in accordance with UDC Section 3.15.030, which stated:
Required Findings
The Zoning Board of Adjustment may authorize a variance from the requirements of the zoning provisions of the UDC if the variance from the terms of the zoning provisions is not contrary to the public interest and, due to special conditions, a literal enforcement of the requirements would result in unnecessary hardship, so the spirit of this Code is preserved, and substantial justice done. No variance shall be granted unless the ZBA finds all of the required findings established in UDC Section 3.15.030.A.
Staff has reviewed the submitted Zoning Variance request in accordance with the UDC and other applicable codes. Staff has determined that the request complies with 1 and does not comply with 6 of the 7 required findings established in UDC Section 3.15.030.A for a Zoning Variance as outlined in the attached staff report.

Public Comments:
As required by the Unified Development Code (UDC), all property owners and registered neighborhood associations within 300-feet of the subject property were notified of the request (9 notices mailed), a legal notice advertising the public hearing was placed in the Sun Newspaper (10.04.2026) and signs were posted on-site. As of the publication date of this report, staff has received 0 written comments in favor and 0 in opposition of the request.

FINANCIAL IMPACT:
None. The applicant has paid the required application fees

SUBMITTED BY:
Hannah Breaux, Planning Department

ATTACHMENTS:
2025-12-VAR - Staff Report.pdf
2025-12-VAR-Cover Sheet.pdf
2025-12-VAR-PowerPoint Presentation.pdf
Exhibit 1 - Zoning Map.pdf
Exhibit 2-Concept Plan.pdf
Exhibit 3-Letter of Intent.pdf
Exhibit 4 - 2025-12-VAR - Approval Criteria Staff Analysis.pdf

Report Date: October 20th, 2026
Case Number: 2025-12-VAR

AGENDA ITEM DESCRIPTION

Public Hearing and possible action on a Zoning Variance to increase the maximum allowable wall-sign area from 197.00 square feet to 341.80 square feet for an additional 145.70 square feet wall sign, pursuant to Section 10.06.010 of the Unified Development Code, for the property located at 205 Jesse Cocke Drive, Georgetown, Texas 78628, bearing the legal description of 5.032 Acres, Lot 2, Block A, of the Lakeway Plaza Subdivision (2025-12-VAR).

AGENDA ITEM DETAILS

Project Name:	Crunch Fitness
Applicant:	Texas Pro Signs
Property Owner:	Crunch Fitness, c/o Brooke Chavez
Property Address:	205 Jesse Cocke Drive, Georgetown, Texas within Council District No. 5
Legal Description:	5.032 Acres, Lot 2, Block A of the Lakeway Plaza Subdivision
Current Zoning:	Holt Cat 2017-07-PUD, with a base zoning of Industrial
Current Use:	Fitness Center

APPLICANT'S REQUEST

The front-elevation wall sign measures 196.1 square feet and has already been permitted. The applicant now requests approval for a second wall sign on the building's side elevation wall, totaling 145.7 square feet. Combined, the signs cover 341.80 square feet.

To accommodate the second sign, the applicant is requesting a zoning variance to increase the maximum allowable wall-sign area from the permitted 197 square feet (calculated at 1 square foot per linear foot of primary façade) to 341.80 square feet, which the length of the primary façade does not permit under Georgetown's sign restrictions.

This would add 145.70 square feet of wall-sign area beyond the amount allowed under Section 10.06.010 of the Unified Development Code.

RECOMMENDATION

Staff recommend denial of the request.

PROPERTY CONTEXT

The site is located within the Holt Cat PUD (ORD 2017-07), an area characterized by a mix of commercial and industrial uses. Surrounding properties include general commercial development, industrial uses and additional Holt Cat PUD land to the north and east, major big-box retail such as Lowe's and Costco to the south within the Costco PUD, and further industrial operations to the west. Overall, the area reflects a strong employment-center character defined by large parcels, auto-oriented development patterns, and a combination of industrial, general commercial, and regional retail uses.

STAFF ANALYSIS

Staff reviewed the requested variance and found that increasing the permitted sign allowance does not meet 5 of the 6 required findings for a zoning variance established in UDC Section 3.15.030, as detailed in Exhibit 4.

The applicant's request does not meet most variance criteria. The applicant has not demonstrated unique physical conditions that create a true hardship, and the reasons provided, such as setbacks, visibility, and building orientation, are common among nearby commercial properties. Although the larger sign would not harm public health or surrounding properties, the conditions prompting the request are widespread in the area and stem in part from the applicant's own design choices.

The applicant has not shown that strict Code application limits reasonable use of the site, and granting the variance would conflict with the intent of the Comprehensive Plan and the Unified Development Code by weakening the consistent application of sign standards and potentially encouraging similar requests.

PUBLIC NOTIFICATION

As required by the Unified Development Code, all property owners within a 300-foot radius of the subject property were notified of the Zoning Variance request (9 notices), a legal notice advertising the public hearing was placed in the Sun Newspaper (10.04.2026) and signs were posted on-site. To date, staff has received 0 written comments in favor, and 0 in opposition to the request (Exhibit 5).

ATTACHMENTS

Exhibit 1 – Zoning Map
Exhibit 2 – Conceptual Plan
Exhibit 3 – Letter of Intent
Exhibit 4 – Zoning Variance Criteria Staff Analysis
Exhibit 5 – Public Comment (if applicable)

SUBMITTED BY

Matt Skawin, Planner

Variance Cover Sheet

TITLE:
2025-12-VAR – Crunch Fitness, Sign Variance

AGENDA CATEGORY:
Legislative Regular Agenda

SUBJECT:
Public Hearing and possible action on a Zoning Variance to increase the maximum allowable wall-sign area from 197.00 square feet to 341.80 square feet for an additional 145.70 square feet wall sign, pursuant to Section 10.06.010 of the Unified Development Code, for the property located at 205 Jesse Cocke Drive, Georgetown, Texas 78628, bearing the legal description of 5.032 Acres, Lot 2, Block A, of the Lakeway Plaza Subdivision (2025-12-VAR). Matt Skawin, Planner

ITEM SUMMARY:
Overview of Applicant's Request:
The applicant is requesting a variance to increase the maximum permitted wall-sign area. The building already has a permitted 196.1-square-foot front-elevation sign, and the applicant seeks approval for a second side-elevation sign measuring 145.7 square feet. Together, the signs total 341.8 square feet, exceeding the 197 square feet allowed based on the primary façade length. The variance would allow an additional 145.7 square feet beyond the limit established in Section 10.06.010 of the Unified Development Code.

Staff's Analysis:
The following are the pertinent sections of the Unified Development Code (UDC) related to this request:

- UDC Section 10.06.010

Staff has reviewed the variance request and the applicant's stated findings, and has evaluated the request based on the UDC required findings for a variance in accordance with UDC Section 3.15.030, which stated:

Required Findings
The Zoning Board of Adjustment may authorize a variance from the requirements of the zoning provisions of the UDC if the variance from the terms of the zoning provisions is not contrary to the public interest and, due to special conditions, a literal enforcement of the requirements would result in unnecessary hardship, so the spirit of this Code is preserved, and substantial justice done. No variance shall be granted unless the ZBA finds all of the required findings established in UDC Section 3.15.030.A.

Staff has reviewed the submitted Zoning Variance request in accordance with the UDC and other applicable codes. Staff has determined that the request complies with 1 and does not comply with 6 of the 7 required findings established in UDC Section 3.15.030.A for a Zoning Variance as outlined in the attached staff report.

ZONING MAP VARIANCE APPROVAL CRITERIA	
1. *Extraordinary Conditions* That there are extraordinary or special conditions affecting the land involved such that strict application of the provisions of this Unified Development Code will deprive the applicant of the reasonable use of their land. For example, a Zoning Variance might be justified because of topographic or other special conditions unique to the property and development involved, while it would not be justified due to inconvenience or financial disadvantage.	**Does not Comply**
The applicant has not demonstrated any special or extraordinary conditions affecting the land. Their justification centers on the long setback and a desire for larger, architecturally scaled signage, but these reasons reflect common commercial preferences rather than any unique physical hardship. Setbacks, visibility needs, and proportional signage are typical along city streets. Because variances must address hardships inherent to the property itself and not improved functionality or aesthetic preferences, the request does not meet this criterion.	
2. *No Substantial Detriment* That the granting of the Zoning Variance will not be detrimental to the public health, safety or welfare or injurious to other property in the area or to the City in administering this Code.	**Complies**
The proposed signage is not expected to harm public health, safety, welfare, or surrounding property. The larger wall sign is intended to improve visibility, and there is no evidence that it would create hazards or negative impacts.	
3. *Other Property* That the conditions that create the need for the Zoning Variance do not generally apply to other property in the vicinity.	**Does not comply**
The applicant has not shown that the cited conditions are unique to this property. Factors such as setback, visibility needs, drive-through location, and traffic flow are common across many commercial sites. Comparable properties with similar conditions comply with the City's sign standards, and a variance cannot be justified by circumstances that are widely shared in the area. Furthermore, granting this variance could set a precedent that encourages other buildings within the same development to pursue larger signs as well.	

ZONING MAP VARIANCE APPROVAL CRITERIA	
4. *Applicant's Actions* That the conditions that create the need for the Zoning Variance are not the result of the applicant's own actions.	**Does not comply**
Although the applicant claims it did not create the need for a variance, the site-planning and design choices, such as building orientation and sign package selection, directly support the request. The hardship stems in part from design decisions rather than from the land's physical characteristics. Variance criteria require that the need for relief not arise from the applicant's own actions, so this standard is not met.	
5. *Comprehensive Plan* That the granting of the Zoning Variance would not substantially conflict with the Comprehensive Plan and the purposes of this Code.	**Does not comply**
The applicant has not demonstrated that the variance would avoid conflict with the Comprehensive Plan or the intent of the Unified Development Code, which requires that variances preserve the spirit of the Code and serve the public interest. Although the signage may improve visibility, granting additional sign area would undermine the consistent application of Chapter 10 sign standards, which are intended to be uniformly applied across similar properties. Variances are meant to address true hardships, not business preferences or visibility	
6. *Utilization* That because of the conditions that create the need for the Zoning Variance, the application of this Code to the particular piece of property would effectively prohibit or unreasonably restrict the utilization of the property.	**Does not comply**
The applicant has not demonstrated that strict application of sign regulations prohibits or unreasonably restricts property use. In fact, the applicant's own narrative states that the site can operate without the variance and that the requested signage would simply enhance utilization. A variance must show necessity rather than benefit. While the proposed signage may be advantageous, it is not essential to the reasonable use of the property.	
7. *Insufficient Findings* The following types of possible findings do not constitute sufficient grounds for granting a Zoning Variance: a. That the property cannot be used for its highest and best use. b. That there is a financial or economic hardship. c. That there is a self-created hardship by the property owner or their agent. d. That the development objectives of the property owner are or will be frustrated.	**Does not comply**

The requested Zoning Variance does not comply with 6 of the 7 approval criteria and only complies with 1 of the 7.

Public Comments:
As required by the Unified Development Code (UDC), all property owners and registered neighborhood associations within 300-feet of the subject property were notified of the request (*9* notices mailed), a legal notice advertising the public hearing was placed in the Sun Newspaper (*10.04.2026*) and signs were posted on-site. As of the publication date of this report, staff has received *0* written comments in favor and *0* in opposition of the request.

FINANCIAL IMPACT:
None. The applicant has paid the required application fees.

SUBMITTED BY:
Matt Skawin

ATTACHMENTS

2026-12-VAR – ZBA Staff Report	*Cover Memo*
Exhibit 1 – Zoning Map	*Backup Material*
Exhibit 2 – Concept	*Backup Material*
Exhibit 3 – Letter of Intent	*Backup Material*
Exhibit 4 – Zoning Variance Criteria Staff Analysis	*Backup Material*
Exhibit 5 – Public Comments (if applicable)	*Backup Material*

Crunch Fitness
2025-12-VAR

October 20, 2026 | Zoning Board of Adjustment

Item Under Consideration

2025-12-VAR

- Public Hearing and possible action on a Zoning Variance to increase the maximum allowable wall-sign area from 197.00 square feet to 341.80 square feet for an additional 145.70 square feet wall sign, pursuant to Section 10.06.010 of the Unified Development Code, for the property located at 205 Jesse Cocke Drive, Georgetown, Texas 78628, bearing the legal description of 5.032 Acres, Lot 2, Block A, of the Lakeway Plaza Subdivision (2025-12-VAR). Matt Skawin, Planner

Item Under Consideration

The Zoning Board of Adjustment may authorize a Zoning Variance from the requirements of the zoning provisions of this Unified Development Code if the Variance from the terms of the zoning provisions is:

- Not contrary to the public interest
- Due to special conditions
- A literal enforcement of the requirements would result in unnecessary hardship
- The spirit of this Code is preserved
- Substantial justice done

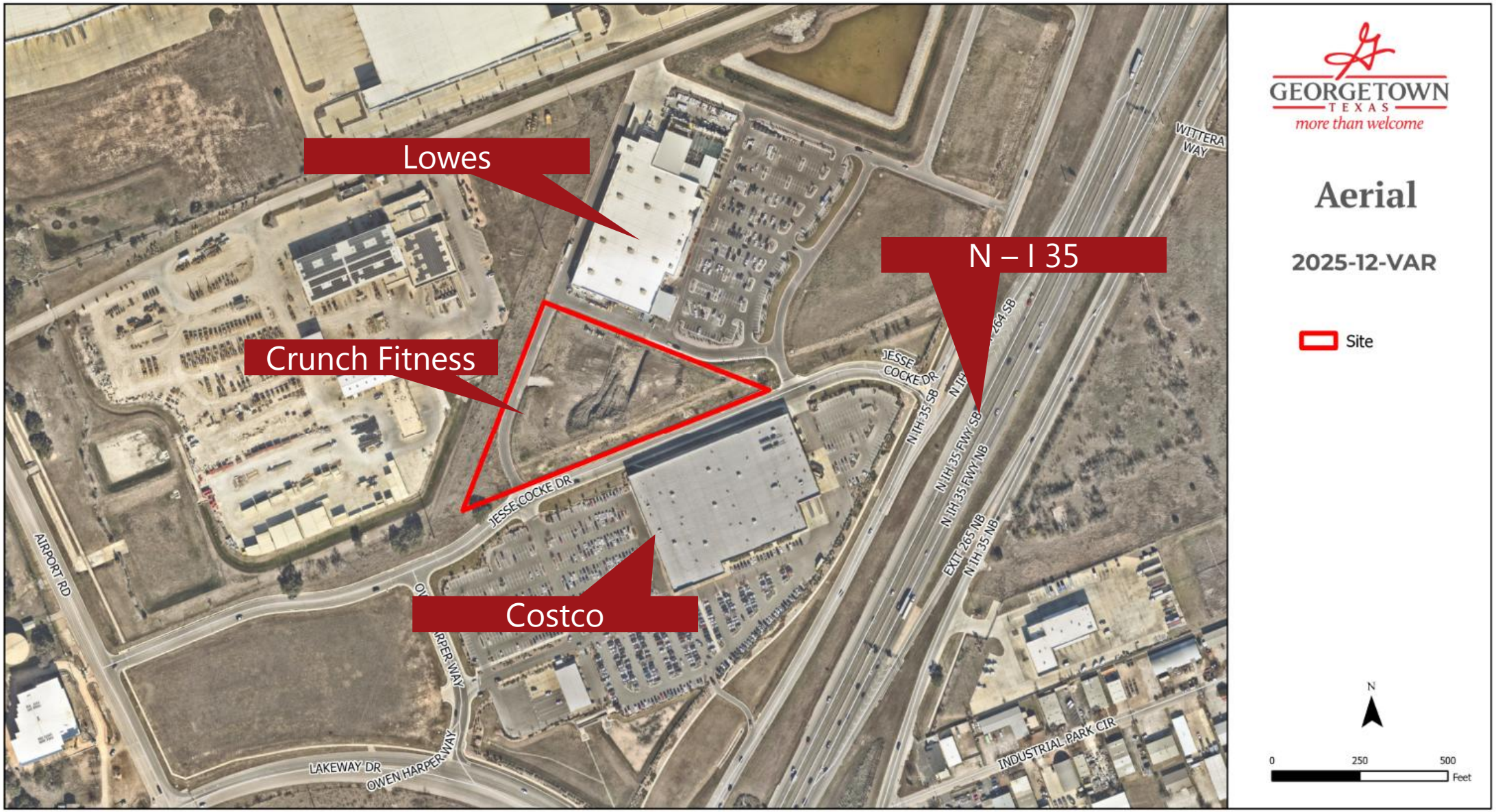
Lowes
Crunch Fitness
Costco
N – I 35
GEORGETOWN
TEXAS
more than welcome
Aerial
2025-12-VAR
Site
N
0
250
500
Feet
WITTERA WAY
JESSE COCKE DR
N IH 35 SB
N IH 35 FWY SB
N IH 35 FWY NB
EXIT 265 NB
N IH 35 NB
AIRPORT RD
LAKEWAY DR
OWEN HARPER WAY
INDUSTRIAL PARK CIR

Summary of Request

- The applicant previously received a permit for a 196.1-square-foot wall sign on the East (front) elevation. They now seek a variance to allow a second wall sign measuring 145.7 square feet on the south (side) elevation. Together, the two signs total 341.80 square feet of wall signage.



Applicable UDC Sections

- UDC Section 10.06.010
  - Building Wall- Maximum Area Per Sign (sq. ft.)
    - 1 per linear foot of primary façade
  - The length of the primary facade (east elevation) limits the maximum allowable wall sign area to **197 square feet.**

South Elevation- Plans and Specifications- Requested Sign Variance

ILLUMINATED FRONT LIT CHANNEL LETTERS - SOUTH ELEVATION

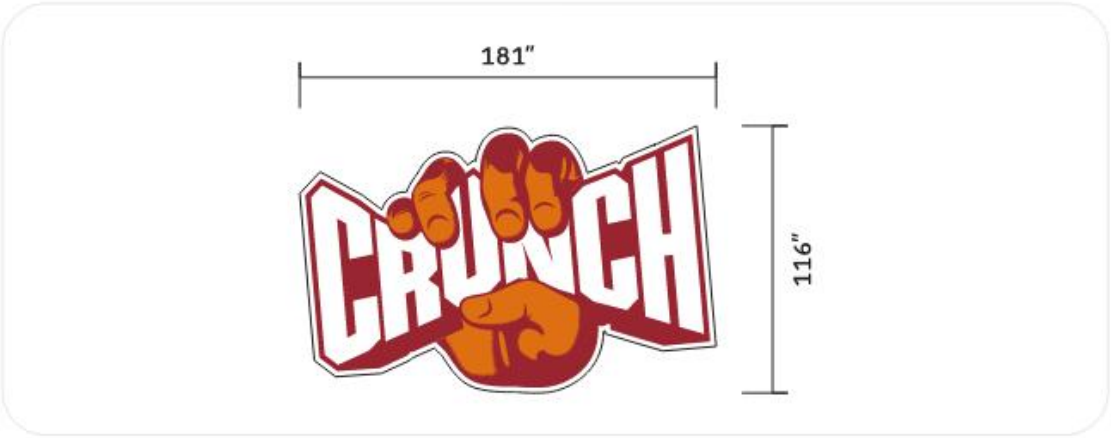

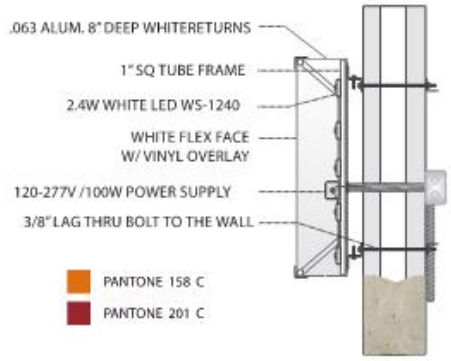

145.7 SQFT



Plans and Specifications

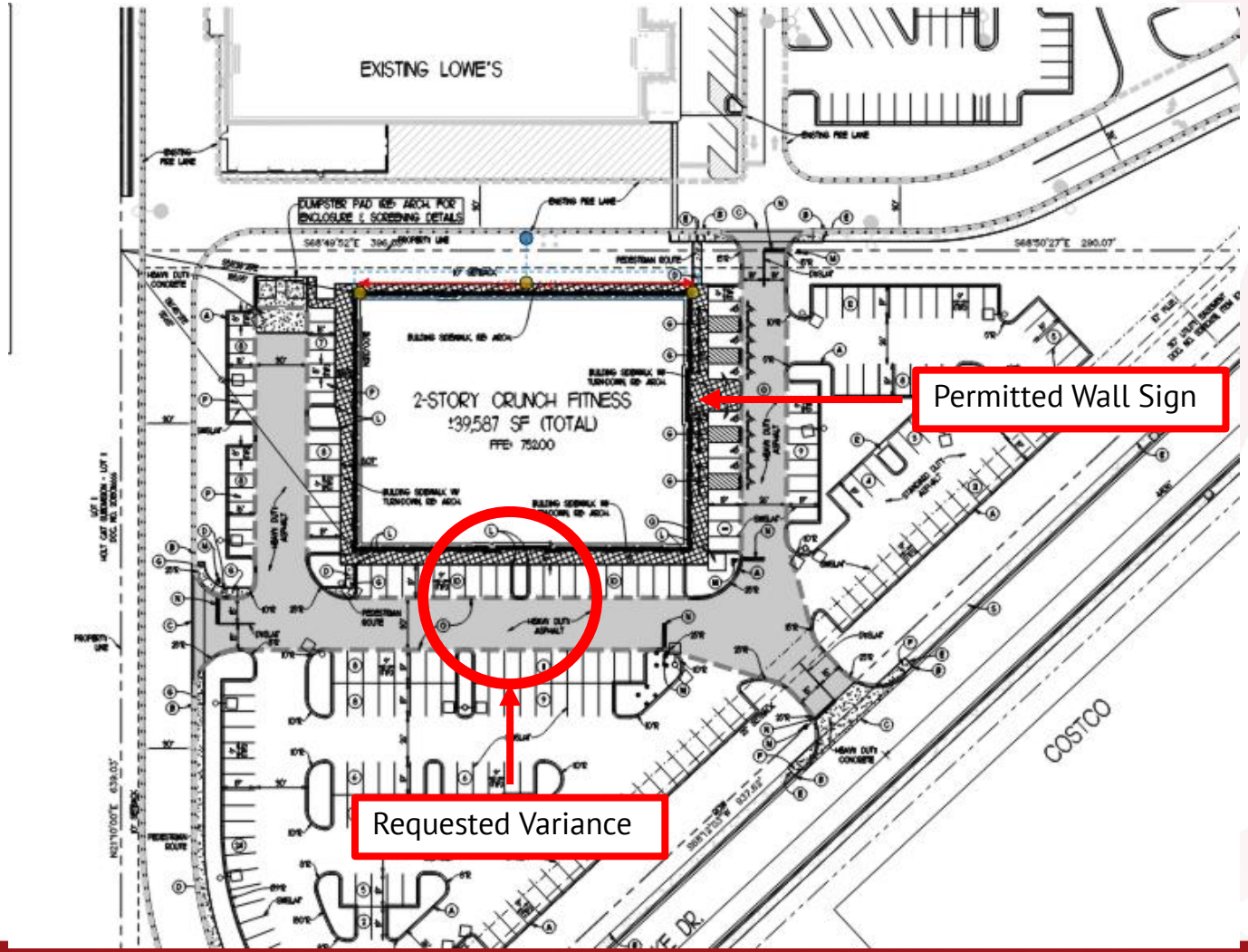

Plans and Specifications-Requested Sign Variance with Permitted Sign



2 PERSPECTIVE VIEW 2 Copy 1

Zoning Variance

The Zoning Board of Adjustment may authorize a Zoning Variance from the requirements of the zoning provisions of this Unified Development Code if the Variance from the terms of the zoning provisions is:

- Not contrary to the public interest
- Due to special conditions
- A literal enforcement of the requirements would result in unnecessary hardship
- The spirit of this Code is preserved
- Substantial justice done

Approval Criteria – UDC Section 3.15.030

Criteria for Rezoning	Complies	Partially Complies	Does Not Comply
1. Extraordinary Conditions That there are extraordinary or special conditions affecting the land involved such that strict application of the provisions of this Unified Development Code will deprive the applicant of the reasonable use of their land. For example, a Zoning Variance might be justified because of topographic or other special conditions unique to the property and development involved, while it would not be justified due to inconvenience or financial disadvantage.			X

Approval Criteria – UDC Section 3.15.030

Criteria for Rezoning	Complies	Partially Complies	Does Not Comply
2. No Substantial Detriment That the granting of the Zoning Variance will not be detrimental to the public health, safety or welfare or injurious to other property in the area or to the City in administering this Code.	X		
3. Other Property That the conditions that create the need for the Zoning Variance do not generally apply to other property in the vicinity.			X

Approval Criteria – UDC Section 3.15.030

Criteria for Rezoning	Complies	Partially Complies	Does Not Comply
4. Applicant's Actions That the conditions that create the need for the Zoning Variance are not the result of the applicant's own actions.			X
5. Comprehensive Plan That the granting of the Zoning Variance would not substantially conflict with the Comprehensive Plan and the purposes of this Code.			X

Approval Criteria – UDC Section 3.15.030

Criteria for Rezoning	Complies	Partially Complies	Does Not Comply
6. Utilization That because of the conditions that create the need for the Zoning Variance, the application of this Code to the particular piece of property would effectively prohibit or unreasonably restrict the utilization of the property.			X

Approval Criteria – UDC Section 3.15.030

Criteria for Rezoning	Complies	Partially Complies	Does Not Comply
7. Insufficient Findings The following types of possible findings do not constitute sufficient grounds for granting a Zoning Variance: • That the property cannot be used for its highest and best use. • That there is a financial or economic hardship. • That there is a self-created hardship by the property owner or their agent. • That the development objectives of the property owner are or will be frustrated.			X

Public Notifications

- 9 property owners within the 300’ buffer
- Notice in Sun News on 10.04.2026
- Signs posted on the property
- To date, staff has received:
  - 0 written comments IN FAVOR
  - 0 written comments OPPOSED



Summary

- Public Hearing and possible action on a Zoning Variance to increase the maximum allowable wall-sign area from 197.00 square feet to 341.80 square feet for an additional 145.70 square feet wall sign, pursuant to Section 10.06.010 of the Unified Development Code, for the property located at 205 Jesse Cocke Drive, Georgetown, Texas 78628, bearing the legal description of 5.032 Acres, Lot 2, Block A, of the Lakeway Plaza Subdivision (2025-12-VAR). Matt Skawin, Planner
- Four votes (a supermajority (3/4) vote of the Board) are required to grant a Variance. A variance that does not receive four votes is considered denied. (Code of Ord. 2.29.040)
- When making a motion, the Board must make a finding of the criteria.

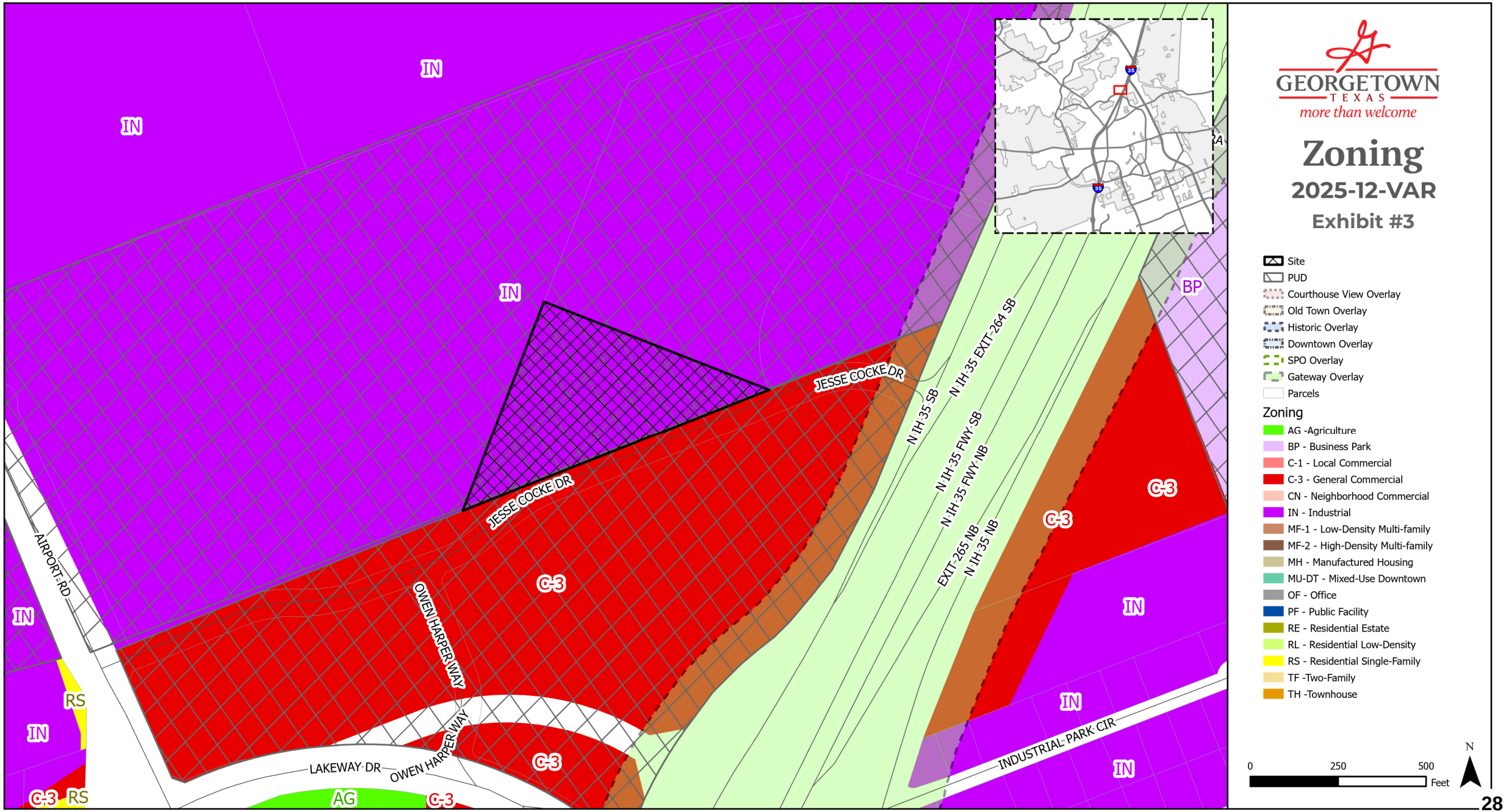
IN
IN
IN
BP
C-3
C-3
C-3
C-3
C-3
IN
IN
IN
IN
RS
RS
AG
JESSE COCKE DR
JESSE COCKE DR
AIRPORT RD
OWEN HARPER WAY
OWEN HARPER WAY
LAKEWAY DR
N IH 35 EXIT 264 SB
N IH 35 SB
N IH 35 FWY SB
N IH 35 FWY NB
EXIT 265 NB
N IH 35 NB
INDUSTRIAL PARK CIR
GEORGETOWN
TEXAS
more than welcome
Zoning
2025-12-VAR
Exhibit #3
Site
PUD
Courthouse View Overlay
Old Town Overlay
Historic Overlay
Downtown Overlay
SPO Overlay
Gateway Overlay
Parcels
Zoning
AG -Agriculture
BP - Business Park
C-1 - Local Commercial
C-3 - General Commercial
CN - Neighborhood Commercial
IN - Industrial
MF-1 - Low-Density Multi-family
MF-2 - High-Density Multi-family
MH - Manufactured Housing
MU-DT - Mixed-Use Downtown
OF - Office
PF - Public Facility
RE - Residential Estate
RL - Residential Low-Density
RS - Residential Single-Family
TF -Two-Family
TH -Townhouse
N
0
250
500
Feet

ILLUMINATED FRONT LIT CHANNEL LETTERS - SOUTH ELEVATION

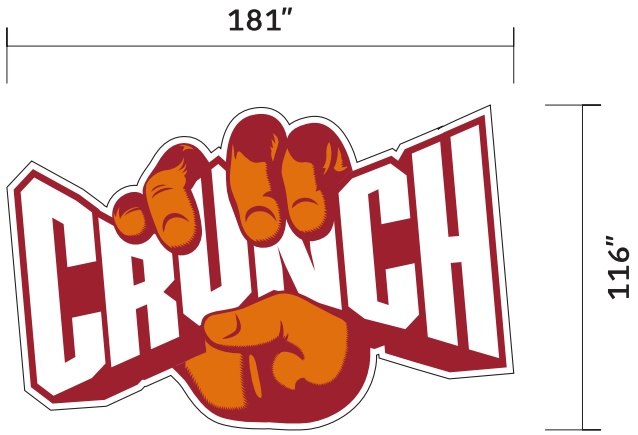

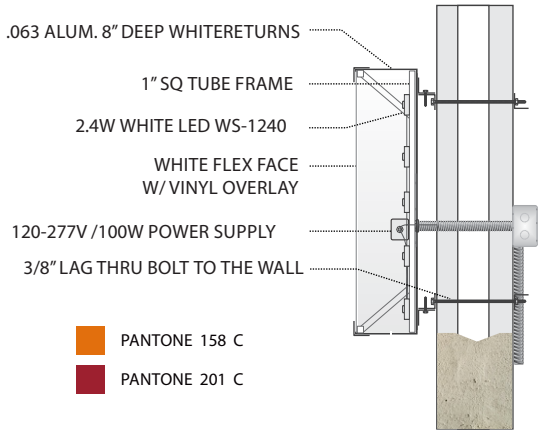

145.7 SQFT

197' 7" STORE SIDE

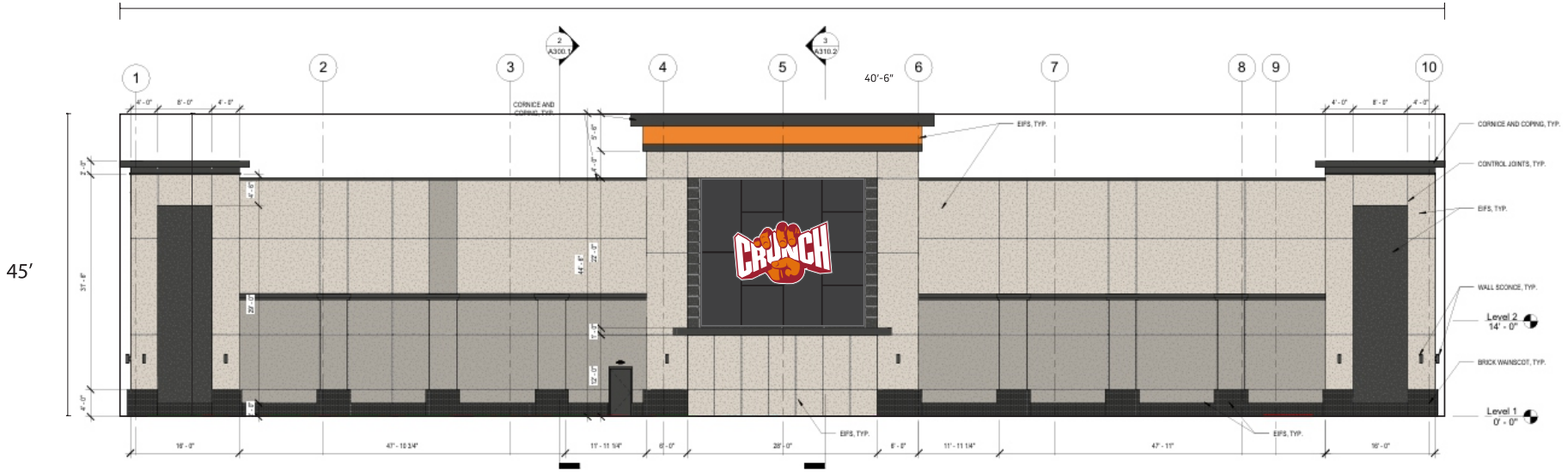

TEXAS PRO SIGNS
214.956.7811 972.241.6744
www.texasprosigns.com
2312 Fabens Rd, Dallas, TX 75229

TITLE :	CRUNCH FITNESS - GEORGETOWN
FILE :	CRUNCH FITNESS - GEORGETOWN - SOUTH ELE REV 02
ADDRESS :	205 JESSE COCKE DRIVE, GEORGETOWN, TX 78628
SCALE :	1:384
DESIGNER :	K, DAUGHETY / NAM
DATE :	9/4/2025

CLIENT APPL | LANDLORD APPL | PERMIT

PROJECT | PRODUCTION | INSTALL

All designs and drawings remain Texas Pro Signs exclusive property and in no way may be copied or duplicated without written consent.

Under writers Laboratories Inc. E206103

SIGN CF-LOGO+50 / SIGN DETAILS

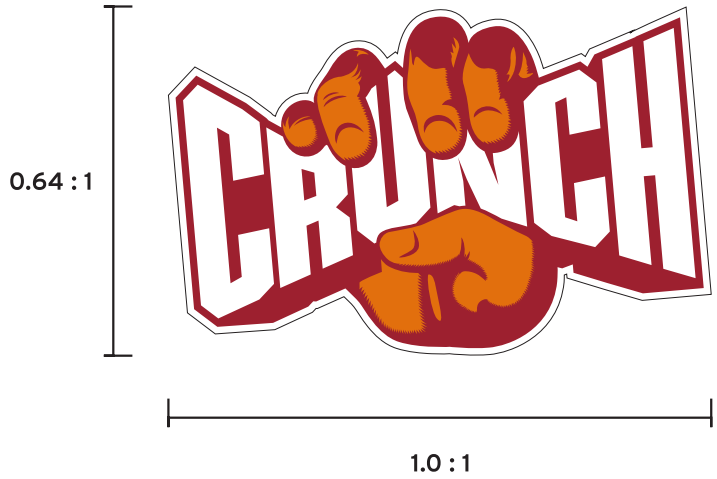

FITNESS

FRONT LIT CHANNEL BOX SIGN

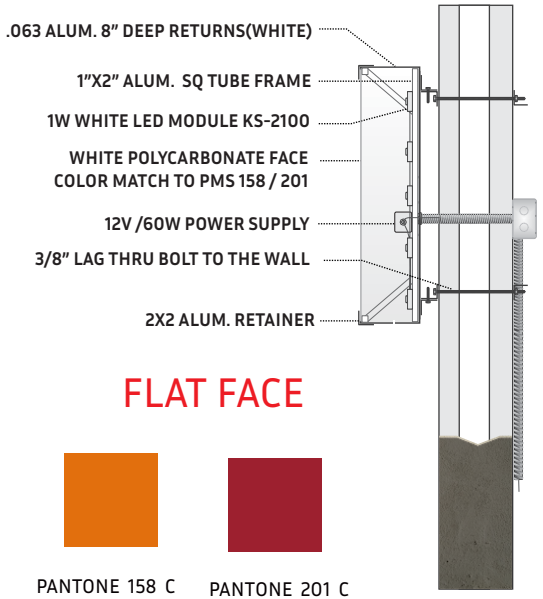

FLAT FACE

PANTONE 158 C

PANTONE 201 C

FRONT LIT INDIVIDUAL CHANNEL LETTERS

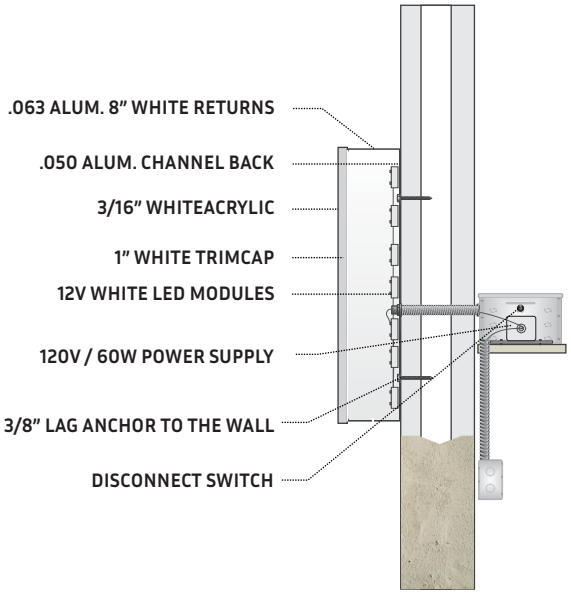



#5687 WHITE TRIMCAP 1"

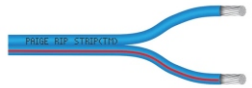

PAIGE RIP STRIP 18AWG WIRE



12V 1.2W SUNLUX WHITE LED



VENTEX POWER SUPPLY BOX
SINGLE / DOUBLE



12V 60W KEYSTONE POWER SUPPLY



ALL THREAD STUD : 1/4" X 6"

CITY OF GEORGETOWN
COMMUNITY DEVELOPMENT DEPARTMENT
PETITION FOR SIGN PLAN REVIEW – CRUNCH FITNESS / TEXAS PRO SIGNS
205 JESSE COCKE DRIVE, GEORGETOWN TX 78628

NARRATIVE STATEMENT – REQUEST FOR SIGN VARIANCE

Background and Site History

Until 2023, this location was an empty field near a primarily an industrial and industrial supply area on this north part of Georgetown. Now this is a vibrant retail area, bringing in hundreds of recurrent customers to Costco (2023), Lowes (June 2025) and soon, Crunch Fitness in 2026.[1]

Proposed Use and Signage

Crunch Fitness will be erecting a ground-up two-story 40,000 square foot facility beginning in late 2025.[1]

Crunch Fitness is proposing two wall-mounted signs each being 195 square feet (including logo and "FITNESS" text), consistent with the architectural scale of the storefront. These would be mounted on the main entrance on the east elevation with a southern secondary elevation.

Zoning Code Context

The subject property is located within the IN zoning district, which restricts commercial signage to a total of one square foot of sign area for each linear foot of the longest side of the building. Currently this limits the total signage to 197 sf for the entire structure.

The facility is a two-story 45-foot tall with the largest façade area of the Crunch Fitness facility being 8,865 square feet. The proposed signage is a very small percentage of the facade, and only slightly more of the smaller facade.

- Front elevation: 2.2% of facade area; Side elevation: 2.9% of facade area
- Appropriately scaled for visibility and proportion to the building's large façade and deep setback.

Justification for Variance: We respectfully request approval of this signage variance based on the following considerations:

Approval Criteria per UDC Section 3.15.030

Extraordinary Conditions:

Visibility Necessity Due to Surrounding Parking and Setback

Enforcement of code to this facility would unreasonably restrict the utilization of the property. The southern elevation sign requested in this variance is more visible to the parking area south of the gym, and to the passing traffic on Jesse Cocke Dr., especially from Costco.

The southern entrance is set back about 340 feet from the southernmost parking lot entrance on Jesse Cocke Drive. This additional sign is necessary for adequate visibility and identification by passing motorists and pedestrians. Without this visibility, both the success of the business and the continued vibrancy of the center are at risk.

Economic Development and Community Benefit

Crunch Fitness plans to invest about $5 million[1] in this location, including renovations, local construction services, and supply purchases. Once operational, the facility will create 80–100 full-time jobs. As a high-traffic, membership-based business, Crunch Fitness will attract regular visitors to the area, indirectly supporting neighboring businesses such as shops and restaurants.

Brand Recognition

Costco and Lowes, the other nearby properties, are nationally known brands recognized by their signage and building architecture. Crunch Fitness is newer to the area and does not employ a common architecture as to be recognized instantly as Crunch Fitness. They will need to rely on their signage on both elevations for brand visibility and for customer navigation.

No Substantial Detriment:

The granting of this variance would not be detrimental to the public health, safety or welfare of other property in the area or to the City. Nor would the granting of this variance substantially conflict with the Comprehensive Plan or the intents or purposes of the code.

Other Property:

The conditions that create the need for this variance request do not apply to other properties in the area. The other main properties of Costco and Lowe's are much closer to the main frontage road and their buildings are closer to the entrance areas of their parking lots.

Applicant's Actions:

The applicant's own actions did not cause the need for this variance request.

Comprehensive Plan:

Approval of this variance would not affect the prime goal of the 2030 Comprehensive Plan which states the desire to: Promote development patterns with balanced land uses that provide a variety of well-integrated housing and retail choices, transportation, public facilities, and recreational options in all parts of Georgetown. Balance is the key word here, balancing the needs of the city for responsible growth while also attending to the needs of new businesses coming to your city to increase revenue, provide well-paying jobs, and attract more residents.

Approval of this variance would be in line with the need for providing a development framework that guides fiscally responsible growth, as also stated in the Plan's goals.

Proportionality and Aesthetics
The proposed signage will occupy just under 3% of each elevation, very modest relative to the overall building size. The two-story 45 foot tall facade on both elevations necessitates adequate signage for an appropriate design. If the second elevation did not have signage, that large facade would appear visually disconnected from the architectural scale of the façade. The proposed signage ensures the storefronts remain balanced, professional, and in keeping with modern retail design standards.

Consistency with Surrounding Development
Nearby businesses, including Costco and Lowes have signage that is similarly scaled and appropriate to their building sizes and setbacks. The proposed Crunch Fitness sign is in keeping with this visual character and will not appear out of place.





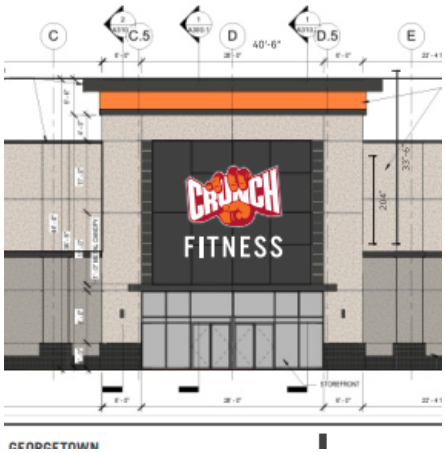

Utilization:

Visibility Necessity Due to Surrounding Parking and Setback
As mentioned in the extraordinary conditions above, enforcement of code to this facility would unreasonably restrict the utilization of the property. The southern elevation sign requested in this variance is more visible to the parking area south of the gym, and to the passing traffic on Jesse Cocke Dr., especially from Costco. The southern entrance is set back about 340 feet from the southernmost parking lot entrance on Jesse Cocke Drive. This additional sign is necessary for adequate visibility and identification by passing motorists and pedestrians. Without this visibility, both the success of the business and the vibrancy of the center are at risk.

Conclusion

We believe the intent of the sign code — to ensure tasteful, appropriate signage that supports the character of the district — is fully respected in this proposal. The requested variance is reasonable, minimal, and necessary to ensure visibility and proportionality for a large retail space with substantial setback from the road.

Approval of this variance will support a significant investment in the community and help the continued invigoration of this newly developed area. We appreciate your consideration of this request and look forward to contributing positively to the City of Georgetown's continued growth.

Notes:

1. Houston Chronicle, Community Impact News, 2023-2025

Report Date: October 20, 2026
Case Number: 2025-12-VAR

UDC Section 3.15.030 – Criteria for Zoning Variance Review

The Zoning Board of Adjustment may authorize a Zoning Variance from the requirements of the zoning provisions and sign regulations of this Unified Development Code if the Variance from the terms of the zoning provisions is not contrary to the public interest and, due to special conditions, a literal enforcement of the requirements would result in unnecessary hardship, so the spirit of this Code is preserved, and substantial justice done.

No Zoning Variance shall be granted unless the ZBA finds that all six of the criteria listed in the table below are met. A seventh criteria established in the UDC states the following types of possible findings do not constitute sufficient grounds for granting a Zoning Variance:

a. That the property cannot be used for its highest and best use.
b. That there is a financial or economic hardship, except as authorized in Local Government Code 211.009(b-1).
c. That there is a self-created hardship by the property owner or their agent.
d. That the development objectives of the property owner are or will be frustrated.

1. *Extraordinary Conditions* That there are extraordinary or special conditions affecting the land involved such that strict application of the provisions of this Unified Development Code will deprive the applicant of the reasonable use of their land. For example, a Zoning Variance might be justified because of topographic or other special conditions unique to the property and development involved, while it would not be justified due to inconvenience or financial disadvantage.	**Does not comply**
The applicant has not demonstrated any special or extraordinary conditions affecting the land. Their justification centers on the long setback and a desire for larger, architecturally scaled signage, but these reasons reflect common commercial preferences rather than any unique physical hardship. Setbacks, visibility needs, and proportional signage are typical along city streets. Because variances must address hardships inherent to the property itself and not improved functionality or aesthetic preferences, the request does not meet this criterion.	

2. *No Substantial Detriment* That the granting of the Zoning Variance will not be detrimental to the public health, safety or welfare or injurious to other property in the area or to the City in administering this Code.	**Complies**
The proposed signage is not expected to harm public health, safety, welfare, or surrounding property. The larger wall sign is intended to improve visibility, and there is no evidence that it would create hazards or negative impacts.	
3. *Other Property* That the conditions that create the need for the Zoning Variance do not generally apply to other property in the vicinity.	**Does not Comply**
The applicant has not shown that the cited conditions are unique to this property. Factors such as setback, visibility needs, drive-through location, and traffic flow are common across many commercial sites. Comparable properties with similar conditions comply with the City's sign standards, and a variance cannot be justified by circumstances that are widely shared in the area. Furthermore, granting this variance could set a precedent that encourages other buildings within the same development to pursue larger signs as well.	
4. *Applicant's Actions* That the conditions that create the need for the Zoning Variance are not the result of the applicant's own actions.	**Does not Comply**
Although the applicant claims it did not create the need for a variance, the site-planning and design choices, such as building orientation and sign package selection, directly support the request. The hardship stems in part from design decisions rather than from the land's physical characteristics. Variance criteria require that the need for relief not arise from the applicant's own actions, so this standard is not met.	
5. *Comprehensive Plan* That the granting of the Zoning Variance would not substantially conflict with the Comprehensive Plan and the purposes of this Code.	**Does not Comply**
The applicant has not demonstrated that the variance would avoid conflict with the Comprehensive Plan or the intent of the Unified Development Code, which requires that variances preserve the spirit of the Code and serve the public interest. Although the signage may improve visibility, granting additional sign area would undermine the consistent application of Chapter 10 sign standards, which are intended to be uniformly applied across similar properties. Variances are meant to address true hardships, not business preferences or visibility	

enhancements. Because no hardship has been shown as required by UDC Section 3.15.030, approving the request would weaken the consistency of development standards and could encourage similar applications in the future.

6. *Utilization* That because of the conditions that create the need for the Zoning Variance, the application of this Code to the particular piece of property would effectively prohibit or unreasonably restrict the utilization of the property.	**Does not Comply**

The applicant has not demonstrated that strict application of sign regulations prohibits or unreasonably restricts property use. In fact, the applicant's own narrative states that the site can operate without the variance and that the requested signage would simply enhance utilization. A variance must show necessity rather than benefit. While the proposed signage may be advantageous, it is not essential to the reasonable use of the property.