AGENDA

Economic Development Council/Industrial Development Authority

EDC/IDA REGULAR MEETING

November 12, 2026, at 8:30 AM

COMMISSION CHAMBERS, 412 WEST ORANGE STREET, ROOM 102, WAUCHULA, FL 33873

BOARD MEMBERS

Chair Chris Idsardi
Vice Chair Lee Mikell
John Gill
Rebekah Tucker
Tiffany Southwell
Thomas Trevino
Micaela Ford

---

1. **CALL TO ORDER**

2. **APPROVAL OF AGENDA**

3. **APPROVAL OF MINUTES**

    1. **Chris Idsardi** - October 2026 Regular Meeting Minutes

        ACTION RECOMMENDED - Motion to approve the October 2026 Minutes as presented.

4. **EXECUTIVE REPORT**

    1. **Amy Tubbs** - November Executive Report

5. **AGENDA ITEMS**

    1. **Krystin Chapman** - Development Incentive and Deliverables Agreement with Higher Development, LLC.

        ACTION RECOMMENDED - Motion to approve the Development Incentive and Deliverables Agreement: 533 Carlton Street, between the Hardee County Industrial Development Authority and Higher Development, LLC. as presented or substantially similar form, and authorize Chair or Vice Chair to sign.

    2. **Sarah Evers** - Updates to the Industrial Development Authority's Policies and Procedures Manual

        ACTION RECOMMENDED - Motion to approve and adopt the Industrial Development Authority's Policies and Procedures manual.

    3. **Krystin Chapman** - Land Lease Agreement

        ACTION RECOMMENDED - Motion to approve the Land Lease Agreement between the Hardee County Industrial Development Authority and Troublesome Creek Cattle Company Inc. as presented or in substantially similar form, and authorize Chair or Vice Chair to sign.

    4. **Krystin Chapman** - 3500 Mancini Place Insurance Cancellation

ACTION RECCOMENDED - Motion to approve the cancellation of the insurance policy associated with 3500 Mancini Place and authorize staff to coordinate the cancellation and any necessary documents.

5. **Amy Tubbs -** Amendment to Rural Infrastructure Grant Agreement-Gardens at Midtown Parking Lot

   ACTION RECOMMENDED - Motion to approve the Amendment to the Rural Infrastructure Grant Agreement-Gardens at Midtown Parking Lot between The Hardee County Industrial Development Authority and The Florida Department of Commerce and authorize Chair or Vice Chair to sign.

6. FINANCIAL REPORT

1. **Krystin Chapman** - October Financial Report

   ACTION RECOMMENDED: Motion to approve the October Financial Report as presented.

7. ANNOUNCEMENTS/OTHER BUSINESS/PUBLIC COMMENTS

8. ADJOURNMENT

AGENDA ITEM NO. 3.1

Item Cover Page

ECONOMIC DEVELOPMENT COUNCIL/INDUSTRIAL DEVELOPMENT AUTHORITY AGENDA ITEM REPORT

DATE:	November 12, 2026
SUBMITTED BY:	Melanie Roberts, Economic Development Council
ITEM TYPE:	Business Agenda - Action Items
AGENDA SECTION:	**APPROVAL OF MINUTES**
SUBJECT:	**Chris Idsardi** - October 2026 Regular Meeting Minutes **ACTION RECOMMENDED** - Motion to approve the October 2026 Minutes as presented.
SUGGESTED ACTION:	

ATTACHMENTS:
2026-10-08 Minutes EDC-IDA RM.pdf

MINUTES

Economic Development Council/Industrial Development Authority

EDC/IDA REGULAR MEETING

October 8, 2026, at 8:30 AM

COMMISSION CHAMBERS, 412 WEST ORANGE STREET, ROOM 102, WAUCHULA, FL 33873

1. CALL TO ORDER

Attendee Name	Title	Status	Arrived
Chris Idsardi	Chair	Present	
Lee Mikell	Vice Chair	Present	
John Gill	Board Member	Present	
Rebekah Tucker	Board Member	Present	
Tiffany Southwell	Board Member	Absent	
Sarah W. Evers	President/Chief Executive Officer	Present	
Kaylee Tuck and/or Julia Mandell	EDC/IDA Board Attorney	Present	
Krystin Chapman	Chief Operating Officer	Present	
Lynn Landskroner	Controller	Present	
Melanie Roberts	Programs and Administrative Coordinator	Present	
Amy Tubbs	Projects & Communications Coordinator	Present	

Chair Idsardi called the meeting to order at 8:34 a.m.

2. APPROVAL OF AGENDA

Chair Idsardi entertained a motion to approve the agenda as presented.

So, moved by Board Member Tucker and second by Board Member Mikell.

Motion carried 4 to 0.
Yes – Idsardi, Mikell, Gill, and Tucker
Absent - Southwell

3. APPROVAL OF MINUTES

1. September 2026 Regular Meeting Minutes:

Chair Idsardi entertained a motion to approve the September 2026 Minutes as presented.

So, moved by Board Member Gill and second by Board Member Mikell.

Motion carried 4 to 0.
Yes – Idsardi, Mikell, Gill, and Tucker
Absent - Southwell

4. EXECUTIVE REPORT

1. October 2026 Executive Report:

Programs and Administrative Coordinator, Melanie Roberts and Projects & Communications Coordinator, Amy Tubbs, provide the October's Executive Report.

Mrs. Roberts began with an update on Lot 27, also known as Debut Development. The project is complete and the facility has been operational at the Commerce Park for over two months. A few punch list items that have come up and are being addressed, including HVAC issues in the wet rooms and liquid batch room, which are being addressed with the engineer and Power Air, as well as drainage issues in the washdown room. Meetings have been scheduled with the construction management team and Debut to work toward resolving these items.

Mrs. Tubbs provided an update on the Multipurpose Facility. Exterior steel plates are being installed to reinforce the interior structural system, with additional plates to be installed inside the building. Concrete perimeter pads will follow the installation of the plates and the shoring of the second floors walls. An encouraging discovery was made when the plaster was removed, revealing that the original interior brick is in good condition. HVAC sizing has been reevaluated to account for retaining the brick and replacing the windows, ensuring the system will adequately serve the space. A meeting was also held to discuss Phase 2, which includes the interior structural work for Bays 2–4 and exterior improvements for Bays 2-4, including painting and window replacement. No formal schedule has been provided for this phase. The meeting helped clarify several items related to doors and windows.

Next an update was provided for Gardens at Midtown Parking Lot. Construction continues to progress, with stormwater and underground utility work nearing completion. A pressure test has also been completed, and grading of the parking lot is underway. The site is beginning to take shape as a parking area. The construction management team plans to begin paving on the north side and work toward the south end, with the goal of maintaining some parking availability for downtown visitors and businesses during construction. The project is expected to show significant progress over the next 30–45 days, with completion still anticipated by the end of 2026.

Mrs. Tubbs, reports on The Manufacturing Hub project continues through the design and development phase. The team recently received the 60% plans and a draft Guaranteed Maximum Price (GMP) from the construction management team. The current GMP exceeds the available grant funding, so the plans are being reviewed to identify necessary adjustments and bring the project within the grant amount. The organization continues to actively seek a tenant for the facility. Design and engineering are expected to be completed by the end of 2026, with site development anticipated to begin in early 2027.

Mrs. Tubbs provided a recap of the Site Selectors Guild event in Cleveland, which Sarah Evers and Krystin Chapman attended in September. They participated in sessions focused on site selection, business investment, and community competitiveness. This was a more intimate setting provided opportunities for meaningful conversations and relationship-building with site selectors.

CEO Sarah Evers recently presented TDG's quarterly update to the Board of County Commissioners. The presentation included the Annual Report, highlighting accomplishments from the past year, key initiatives, progress toward focus areas, project updates, and future priorities.

The Development Group will host a CEO Roundtable on October 15 with eight downtown Main Street business representatives. The gathering will focus on building relationships, discussing common challenges, and identifying opportunities for collaboration among local business leaders. The meeting is scheduled to take place at the Hardee County Chamber of Commerce.

TDG will hold an Emerging Leaders Committee meeting on the afternoon of October 15. Members will be invited to share their ideas and perspectives, learn about the organization's visioning process, and provide input on future priorities. The meeting will also include an in-depth discussion of the Multipurpose Facility and its potential uses, with the goal of gathering ideas about what the community would like to see offered in the space. These activities will be part of TDG's Follow Sarah Series, with the communications team scheduled to film throughout the day.

In November, Sarah Evers and Krystin will participate in the five-day Master in Economic Development program. The professional development program will cover economic outlooks, site selection and negotiation, workforce development, communications, and media relations. The program will provide opportunities to learn from other economic development professionals and gain practical strategies that can benefit The Development Group.

TDG will also participate in the FREDA Rural Summit in Ocala in November. Sarah Evers is scheduled to join the panel discussion, “RAO Case Studies of Unique Initiatives,” where she will highlight TDG's Emerging Leaders Committee and its role in developing future leaders in Hardee County.

Lastly, Mrs. Tubbs promoted Main Street Wauchula's annual fundraiser, Fishy Tails and Funky Tunes, scheduled for October. She encouraged attendees to purchase tickets and provided a QR code for convenient access to ticket information.

Chair Idsardi commented on the Multipurpose Facility project, noting that he had recently stopped by to view the work completed and speak with the project manager onsite. He stated that the project looks neat with all the work completed so far.

Vice Chair Mikell inquired about the Culver's project, noting that it is a frequent question from community members. CEO Sarah Evers provided an update, sharing that the project manager plans to begin work in late November. Their team is working to secure contractors, as availability remains limited, but a demolition contractor has been identified. Mrs. Evers also referenced the work being completed on Hogan Street.

5. AGENDA ITEMS

1. Final Highway 17 Corridor Study Report Presentation:

Jessica Rossi provided several highlights and outcomes from the Hwy 17 Corridor Study.

Jessica, works for Kimley Horn and served as the project manager for this corridor study. She began with the study area extends from county line to county line, encompassing the municipalities of Bowling Green, Wauchula, Zolfo Springs, and Gardner. The corridor is approximately 21 miles long and is diverse and critically important to Hardee County's economic development status, as well as the ongoing growth and development of surrounding counties.

The study area included land roughly half a mile from the centerline of the corridor. Within this area, there are approximately 4,000 jobs and 8,600 residents living in this area. One notable finding was a slight population decline since 2010. Discussions addressed the accuracy of these figures and the limitations of Census data. However, population growth is projected through 2045.

The study was completed in three phases:

- Phase 1: Learn about the study area and Hardee County.
- Phase 2: Use the information gathered to look toward the future and identify effective implementation strategies to help the community achieve its goals by leveraging the Hwy 17 corridor.
- Phase 3: Develop the final report and communicate the results.

The process lasted approximately 15 months, beginning in March 2025 and concluding in June 2026. The final report was presented to the Board of County Commissioners (BOCC) for adoption.

Throughout the process, an advisory committee representing a variety of community perspectives was involved. The team also conducted individual stakeholder interviews, met with elected officials and community members, held community workshops, presented to several local organizations to gather feedback, and worked with staff from the County, City, and The Development Group. A project website was established to share the study results this will remain active until the spring of 2027, and two digital engagement sites were used to collect public input. Two digital engagement series, 3 advisory committee meetings, community workshop, 9 stakeholder interviews.

Through public engagement, five project goals were established:

- Reinforcing community identity
- Advancing economic growth and workforce
- Expanding housing and stabilizing neighborhoods
- Improving mobility and safety
- Investing in resilient infrastructure in an environment

The plan establishes a shared vision and common goals for the corridor, along with strategies and specific actions to achieve each goal.

A land use component was also included. The intent was not to replace individual municipalities' comprehensive plans or future land use plans, but rather to provide a broader land use context for considering the corridor as a whole.

The final plan includes 17 strategies and 61 action items across the five goal pillars. Each strategy and action item identifies the responsible parties, supporting departments or agencies, an estimated cost range, and an anticipated implementation timeframe. Jessica shared the implementation matrix included in the report, which outlines the strategies, action items, lead agencies, and estimated duration for each initiative.

Jessica emphasized the importance of implementing the plan rather than allowing it to sit on a shelf. The implementation matrix was developed to help break the recommendations into manageable steps that can be prioritized and advanced over time. This will assist with grant funding and help support development review and help to make this daunting taks easier to manage.

Vice Chair Mikell commented that the study appeared comprehensive and provided valuable information. He also noted how well the recommendations align with other projects already underway.

Chair Idsardi shared that he participated in some of the meetings and recalled the Florida Department of Transportation (FDOT) being involved to address the safety of Hwy 17 as the area continues to grow and develop. He expressed appreciation for how the plan breaks the recommendations down into tangible action items.

Board Member Gill asked CEO Sarah Evers to review the report and identify the recommendations most relevant to The Development Group and its priorities. He requested that she bring those items back to the Board for further discussion and consideration, allowing the Board to reevaluate priorities as needed based on the study's findings.

CEO Sarah Evers responded that the organization will begin its visioning process for 2027 and will have the opportunity to incorporate some of the recommended actions into that process. She noted that the next step will be determining how to put these recommendations into practice. She also indicated that the recommendations could be evaluated and categorized into short-term, mid-term, and long-term actions for consideration during the Board's visioning process.

Vice Chair Mikell added that businesses such as Culver's are not necessarily locating in Hardee County solely because of the local population, but also because of traffic counts along the corridor. He noted that the study could provide valuable insight into how to manage the corridor, improve its appearance over time, and make Hardee County more appealing to businesses, visitors, and potential residents.

Chair Idsardi recognized County Manager John Eason, who provided additional comments regarding the County's infrastructure priorities.

County Manager Eason shared that approximately $4 million in utility improvements are planned for Pioneer Park. He also noted that, following discussions with the IDA Board and the County Commission Board, the County is pursuing two legislative priorities. The first is a rural transportation and economic development corridor improvement initiative intended to address issues identified in the Hwy 17 Corridor Study. He emphasized that the study should serve as a practical guide for decision-making in Hardee County rather than simply becoming a report that sits unused. The second legislative priority focuses on stormwater infrastructure and addressing related challenges. County Manager Eason stressed the importance of strategic growth and development, emphasizing that necessary infrastructure must be in place before development occurs. Without proper planning and infrastructure investment, the County risks creating challenges that could hinder future growth. He reiterated the importance of using the Hwy 17 Corridor Study to help guide legislative priorities and support informed decisions regarding the County's future development.

2. New State Appropriation Request:

Chief Operating Officer, Krystin Chapman, State Appropriations Request and Mancini Property Development Vision

Krystin Chapman presented the organization’s new state appropriations request. Following the recent legislative session, the organization was awarded its first state appropriation. This opportunity aligns with the findings of the Hwy 17 Corridor Study and the organization’s ongoing efforts to identify available properties and evaluate their highest and best use. The

County's need for additional commercial properties to expand the tax base and generate tangible economic benefits was also discussed.

Krystin presented a vision for the Mancini property in Zolfo Springs, located along Hwy 17. The rendering shown during the presentation was generated using artificial intelligence (AI) to illustrate potential development opportunities for the site.

The approximately 35-acre property, which includes roughly 30 acres previously used as a spray field, is served by the Town of Zolfo Springs' water and sewer systems. The property is already appropriately zoned to support moving the project forward. Krystin noted that discussions have taken place with Mrs. Roberson, who expressed enthusiasm about the possibility of developing the property. The proposed vision focuses on establishing a commercial development site that would provide additional opportunities for business growth along the corridor.

Three conceptual development options were presented:

- Option 1: Retain the Mancini foods existing building, six smaller commercial sites, each approximately 2.5 acres, designed to provide greater diversity and flexibility within the organization's economic development portfolio. These sites could accommodate office or warehouse space and serve businesses seeking a smaller footprint.
- Option 2: Retain the existing Mancini building while developing six commercial or industrial sites, with the potential for additional outparcels for retail or restaurant uses.
- Option 3: Demolish the existing Mancini building to open the Hwy 17 frontage for retail and restaurant development, with the rear portion of the property designated for commercial development.

The presentation illustrated the development vision alongside the organization's request for funding. A Rural Infrastructure Fund Grant application has already been submitted to support design and engineering. The requested state appropriation would help fund the horizontal infrastructure needed to advance development of the property.

Board Member Tucker expressed support for the proposed concepts and described the property as a great opportunity.

Vice Chair Mikell stated that he liked the proposed vision and noted that surrounding land could potentially be acquired if additional space were needed for stormwater retention. He described the plan as a strong opportunity that aligns with the Hwy 17 Corridor Study.

Board Member Gill asked about the status of the existing Mancini building and the organization's plans for the property.

CEO Sarah Evers responded that the organization continues to market the building and recently hosted a showing with a prospective tenant interested in being near a concrete plant. She also provided an update on ongoing discussions involving the bank, Mancini, Mr. Chips, and legal counsel regarding the bankruptcy process and the steps needed to move forward. Sarah explained that the bank, which owns the equipment currently located in the building, has been notified, along with Mr. Chips and other involved parties, that the equipment needs to be removed so the organization can move forward without continuing to assume responsibility for it. The bank is arranging for someone to evaluate the equipment and determine the next steps for its removal and potential auction. In the meantime, the organization continues to explore options for marketing the building through subleasing or a potential sale.

Chair Idsardi emphasized the importance of continuing to market the existing building while pursuing funding opportunities through the state appropriation. He also noted that the organization has already discussed the development concept with the Town of Zolfo Springs to gather input and understand the Town's perspective.

CEO Sarah Evers returned to the proposed renderings and explained that the project would offer a different type of commercial footprint compared to the existing Commerce Park. She noted that the organization has received inquiries from businesses seeking spaces 5,000 square feet or smaller. The proposed development could provide options for small business owners and commercial operators who need a smaller footprint, addressing a gap in the organization's current property offerings and supporting business expansion opportunities.

Board Member Gill noted the direct connection between the proposed development and the incubator project.

Vice Chair Mikell emphasized that small businesses are the backbone of a community and stated that this type of development would help meet local needs while expanding the organization's portfolio of available properties.

Board Member Tucker added that, as a small business owner, she appreciates the opportunity this type of development could provide for other businesses seeking space to grow and establish themselves in Hardee County.

CEO Sarah Evers concluded by emphasizing the importance of preplanning and managed growth. She encouraged the Board to consider the development of the Mancini property alongside the existing Commerce Park on Hwy 62 and its planned second phase. She noted that the Commerce Park demonstrates the value of advance planning and remaining committed to a long-term vision. Decisions made today can shape economic development opportunities over the next 10 to 15 years, making it important to begin implementing strategic action items now to support future growth.

3. FY 2026-2027 State Appropriation Agreement:

Programs and Administrative Coordinator, Melanie Roberts, Downtown Wauchula Revitalization Grant Update

The organization has received the official grant award agreement for the $6 million in state funding to support downtown Wauchula revitalization efforts. This is an important milestone following ongoing coordination with the State to finalize the agreement.

The funding language was intentionally kept broad to provide flexibility in determining which revitalization projects should be prioritized. Eligible activities include the restoration and adaptive use of historic and long-vacant buildings, construction of a public parking lot to support increased downtown activity, and rehabilitation of underutilized alleyways for public access and cultural programming.

This flexibility will allow the Board to determine which projects should be prioritized for 2027 and could provide an opportunity to move projects previously identified as mid-term or long-term priorities into immediate implementation. The funding will help advance efforts to revitalize downtown Wauchula and support continued economic development.

Chair Idsardi asked when the funds would be available.

Mrs. Roberts explained that the grant award agreement has been signed, with an effective date of July 1, 2026. The grant operates on a reimbursement basis and requires a $3.5 million match. Eligible expenses include design, engineering, permitting, and construction, with a grant deadline of June 2028. As eligible expenses are incurred, the organization can request reimbursement and pursue the direct payment option.

CEO Sarah Evers clarified that once the grant award agreement is fully executed, the organization can begin moving forward with eligible expenditures. This allows the organization to begin advancing downtown revitalization projects while determining which initiatives should receive priority.

Chair Idsardi entertained a motion to approve the FY 2026-2027 State Appropriation Award Agreement- HL363, as presented or substantially similar form and authorize the Chair or Vice Chair to sign.

So, moved by Board Member Mikell and second by Board Member Tucker.

Motion carried 4 to 0.
Yes – Idsardi, Mikell, Gill, and Tucker
Absent - Southwell

4. Resolution 2026-26 and Purchase Sale Agreement Between Hardee County Industrial Development Authority and AP Development for the Outparcels on North Highway 17:

Chief Operating Officer, Krystin Chapman, Resolution 2026-26 and Purchase and Sale Agreement for North Hwy 17 Outparcels

Krystin Chapman presented Resolution 2026-26 and the Purchase and Sale Agreement between the Hardee County Industrial Development Authority (IDA) and AP Development for the outparcels located along North Hwy 17 in front of the Innovar building.

Krystin explained that the Board had previously reviewed portions of the proposed agreement. Innovar has waived its right to purchase the outparcels, allowing the organization to move forward with presenting the agreement for consideration.

The property consists of approximately 1.99 acres, with a proposed purchase price of $1.4 million. The agreement includes a 10-month timeline with the following terms:

- An initial $25,000 deposit due within five days of signing the agreement.
- A 180-day investigation period, followed by an additional $25,000 deposit.
- A final government approval period of 120 days, followed by an additional $25,000 deposit.

Krystin noted that the developer is exploring opportunities to secure two tenants for the property, potentially focusing on quick-service restaurants (QSRs). The proposed development aligns with the findings of the Hwy 17 Corridor Study and supports the goal of identifying the highest and best use of the property.

Chair Idsardi requested a map showing the location of the parcels.

Krystin referenced Exhibit A of the agreement and explained the location and configuration of the parcels. She clarified that there are currently no units on the outparcels included in the proposed sale.

Chair Idsardi entertained a motion to approve Resolution 2026-26 and Purchase and Sale Contract between Hardee County Industrial Development Authority and AP Development, as presented or in substantially similar form, and authorize Chair or Vice Chair to sign.

So, moved by Board Member Gill and second by Board Member Tucker.

Motion carried 4 to 0.
Yes – Idsardi, Mikell, Gill, and Tucker
Absent - Southwell

5. Gardens at Midtown First Amendment:

Chief Operating Officer, Krystin Chapman, Amendment to Purchase and Sale Agreement with JRR Chester Grove LLC

Krystin Chapman reminded the Board that it previously approved a Purchase and Sale Agreement between the Hardee County Industrial Development Authority (IDA) and JRR Chester Grove LLC for the first tract of townhomes within the Gardens at Midtown project.

The original timeline was based on the date the Purchase and Sale Agreement was signed. However, there has been a delay as JRR Chester Grove LLC works to secure the necessary permitting and funding, which is contingent upon the City of Wauchula's approval of the construction surety bond.

The construction management team submitted the bond for consideration, but the City of Wauchula had not yet had the opportunity to formally review and vote on the request. The bond was discussed during the City's workshop on Monday. Krystin noted that the City Commissioners have been supportive of the project and expressed appreciation for the IDA's efforts to advance the development and its anticipated benefits to the downtown area. The organization is hopeful that the surety bond will be approved at the upcoming City Commission meeting on Monday.

Krystin explained that the proposed amendment is limited to revising the closing timeline. Under the original agreement, closing was to occur within 20 days following approval of the surety bond. The amendment adjusts the timeline to reflect the City's approval process. Additions and strikethroughs were retained in the document to clearly identify the proposed changes for the Board's review.

Vice Chair Mikell clarified that the amendment simply adjusts the closing timeline to align with the City's decision regarding the surety bond, noting that the timeline would need to be addressed differently if the bond were not approved.

Chair Idsardi entertained a motion to approve the First Amendment to the Purchase Sale Agreement between the Hardee County Industrial Development Authority and JRR Chester Grove, LLC as presented or in substantially similar form and authorize Chair or Vice Chair to sign.

So, moved by Board Member Mikell and second by Board Member Tucker.

Motion carried 4 to 0.
Yes – Idsardi, Mikell, Gill, and Tucker
Absent - Southwell

6. Land Lease Extension Agreement:

Chief Operating Officer, Krystin Chapman, Extension of Land Lease Agreement for Property Adjacent to the Wauchula Municipal Airport

Krystin Chapman explained that the organization currently leases approximately 50 acres adjacent to the Wauchula Municipal Airport. Since the property is not presently prepared for development, the organization entered into a land lease agreement allowing a tenant to operate a cattle operation on the site. The original agreement was for a one-year term, and the proposed action would extend the existing agreement.

The terms of the lease will remain unchanged, with the tenant paying $40 per acre, along with reimbursement for insurance costs. Krystin emphasized that the agreement allows either party to terminate the lease with 30 days' notice. This provision ensures the organization retains flexibility to pursue future development opportunities or projects that complement the airport if a suitable opportunity arises.

In the meantime, the lease provides an opportunity to offset maintenance costs associated with the property while it is not being actively developed.

Vice Chair Mikell noted that the original agreement was established for a one-year term and asked whether the lease would automatically renew until the property is needed for development.

Krystin Chapman clarified that the agreement does not automatically renew and must be brought back before the Board for consideration. She explained that agricultural lease rates can fluctuate significantly, and changes in insurance costs, property taxes, and other expenses must also be considered when determining whether to extend the agreement. These factors are why the lease is not structured for automatic renewal.

Chair Idsardi entertained a motion to approve the Land Lease Extension Agreement extension between the Hardee County Industrial Development Authority and Tyler Robarts as presented or in substantially similar form and authorize Chair or Vice Chair to sign.

So, moved by Board Member Gill and second by Board Member Tucker.

Motion carried 4 to 0.
Yes – Idsardi, Mikell, Gill, and Tucker
Absent - Southwell

7. Maintenance Guaranty Agreement Between the Hardee County Industrial Development Authority and City of Wauchula:

Projects & Communications Coordinator, Amy Tubbs, Maintenance Guaranty for the Gardens at Midtown Parking Lot

Amy Tubbs presented the Maintenance Guaranty requested by the City of Wauchula following discussions regarding the Gardens at Midtown parking lot project.

The guaranty outlines the Hardee County Industrial Development Authority's responsibility to address any failures or defects that become apparent within the first year after the completed parking lot is deeded back to the City of Wauchula. The purpose of the agreement is to ensure the completed work meets expectations and that any issues identified during the warranty period are addressed.

Mrs. Tubbs explained that a letter from the construction management team has also been included, providing a one-year warranty on its work. Together, these documents establish the responsibilities for addressing any necessary repairs or corrections during the applicable warranty period.

The Maintenance Guaranty was presented during the City's workshop this past Monday, and no questions were raised regarding the agreement. It is scheduled to go before the City Commission for approval at its meeting next Monday.

Chair Idsardi entertained a motion to approve the Maintenance Guaranty as presented, or in substantially similar form, subject to review by the City of Wauchula, and authorize Chair or Vice Chair to sign.

So, moved by Board Member Tucker and second by Board Member Mikell.

Motion carried 4 to 0.
Yes – Idsardi, Mikell, Gill, and Tucker
Absent - Southwell

8. Resolution 2026-27 Removing Authorized Signatories and Adding Authorized Signatories on all Bank Accounts:

Controller, Lynn Landskroner, presented Resolution 2026-27, explaining that with Courtney Green's board term ending, an additional authorized signer is needed. The resolution proposes adding Rebecca Tucker as an authorized signer.

Chair Idsardi entertained a motion to approve Resolution 2026-27 to remove Courtney Green from all bank accounts and add Rebekah Tucker as signatories to all bank accounts.

So, moved by Board Member Gill and second by Board Member Mikell.

Motion carried 4 to 0.
Yes – Idsardi, Mikell, Gill, and Tucker
Absent - Southwell

6. FINANCIAL REPORT

1. September 2026 Financial Report:

Controller, Lynn Landskroner, presented the financials for September and reviewed several items listed on the Customer Outstanding Balance Detail Report.

Lynn reported an outstanding balance of $21,433.21 for Debut Development related to the facility previously occupied at 897 S. 6th Avenue. The balance includes July rent, late fees, and reimbursable expenses such as telephone lines, electricity, alarm monitoring, inspections, and pest control.

Lynn also reviewed the outstanding balance for Bowl of Fun, which includes a late fee for July rent and additional rent associated with Formosan treatment.

Board Member Gill noted that the outstanding balances for Debut Development and Bowl of Fun are collectible.

Chair Idsardi commented that the outstanding balance associated with Mancini is not considered collectible.

Chair Idsardi entertained a motion to approve the September Financial Report as presented.

So, moved by Board Member Mikell and second by Board Member Tucker.

Motion carried 4 to 0.
Yes – Idsardi, Mikell, Gill, and Tucker
Absent - Southwell

7. ANNOUNCEMENTS/OTHER BUSINESS/PUBLIC COMMENTS

Vice Chair Mikell announced the opening night of A Midsummer Night's Dream, presented by Peace River Entertainment and Performing Arts Center. The production will feature performances over the weekend, with shows scheduled Friday through Sunday.

8. ADJOURNMENT

With no further business, the meeting was adjourned at 9:40 a.m.

X

Chris Idsardi
Chair EDC/IDA

AGENDA ITEM NO. 4.1

Item Cover Page

ECONOMIC DEVELOPMENT COUNCIL/INDUSTRIAL DEVELOPMENT AUTHORITY AGENDA ITEM REPORT

DATE:	November 12, 2026
SUBMITTED BY:	Melanie Roberts, Economic Development Council
ITEM TYPE:	Business Agenda - Action Items
AGENDA SECTION:	**EXECUTIVE REPORT**
SUBJECT:	**Amy Tubbs** - November Executive Report
SUGGESTED ACTION:	

AGENDA ITEM NO. 5.1

Item Cover Page

ECONOMIC DEVELOPMENT COUNCIL/INDUSTRIAL DEVELOPMENT AUTHORITY AGENDA ITEM REPORT

DATE:	November 12, 2026
SUBMITTED BY:	Melanie Roberts, Economic Development Council
ITEM TYPE:	Business Agenda - Action Items
AGENDA SECTION:	**AGENDA ITEMS**
SUBJECT:	**Krystin Chapman** - Development Incentive and Deliverables Agreement with Higher Development, LLC. **ACTION RECOMMENDED** - Motion to approve the Development Incentive and Deliverables Agreement: 533 Carlton Street, between the Hardee County Industrial Development Authority and Higher Development, LLC. as presented or substantially similar form, and authorize Chair or Vice Chair to sign.
SUGGESTED ACTION:	
ATTACHMENTS:	Final 533 Carlton St.pdf

DEVELOPMENT INCENTIVE AND DELIVERABLES AGREEMENT: SANDHILL COMMONS

THIS DEVELOPMENT INCENTIVE AND DELIVERABLES AGREEMENT (the "Agreement") is made and effective as of _____, 2026 (the "Effective Date"), by and between **HARDEE COUNTY INDUSTRIAL DEVELOPMENT AUTHORITY**, an independent special district and body politic and corporate of the State of Florida ("IDA"), and **HIGHER DEVELOPMENT, LLC** a Florida limited liability company ("Developer").

W I T N E S S E T H:

WHEREAS, the IDA has authorized certain development incentive packages to be available to developers within Hardee County with such incentives being granted at the discretion of the IDA Board of Directors (the "IDA Board"); and

WHEREAS, upon approval of a development incentive, Developer is required to enter into a Development Incentive and Deliverables Agreement to provide for certain deliverables to be met before a developer may receive the requested incentives; and

WHEREAS, on or about June 11, 2026, Developer presented an incentive request to the IDA Board requesting reimbursement for land acquisition costs (the "Development Incentives"); and

WHEREAS, this Agreement outlines the necessary deliverables to be completed by Developer prior to receipt of the Development Incentives.

NOW THEREFORE, in exchange for certain consideration, the receipt and sufficiency of which are hereby acknowledged, the undersigned hereby agree as follows:

1. **DEVELOPMENT INCENTIVES.** Developer has requested a total of Two Hundred Forty-Five Thousand and 00/100 Dollars ($245,000.00), such total representing the costs for land reimbursement for the project known as Sandhill Commons.

2. **INITIAL DELIVERABLE – PUD APPROVAL**

i. Requirements for Initial Deliverable. As an initial deliverable, Developer shall diligently perform all tasks necessary to complete the Planned Unit Development (PUD) process. This includes, but is not limited to, obtaining access permits, preparing and submitting all required applications, plans, and documentation to the applicable governmental authorities, attending meetings and hearings as required, and obtaining all necessary approvals, permits, and licenses to allow Developer to develop the Property. Developer shall submit written verification and proof satisfactory to the IDA that all approvals have been obtained to permit development of the Property pursuant to this Agreement.

It shall be a condition of development that there is no direct residential or driveway access on Carlton Street or Florida Avenue. The IDA reserves the right to review plans prior to

submittal to the applicable jurisdictions and may refuse to authorize the submittal of any plans that do not meet this condition of development.

ii. IDA Cooperation. The IDA shall reasonably cooperate with Developer in pursuit of initial PUD approval by all applicable governing jurisdictions, including but not limited to, timely execution of any documentation needed to permit Developer to submit applications and related documentation. In no event shall an application for development of the property be submitted to any governing jurisdiction without the written consent of the IDA.

iii. Satisfaction of Initial Deliverable. The Initial Deliverable shall be considered satisfied upon receipt by the IDA of proof satisfactory to the IDA that the PUD has received final approval from all applicable governmental jurisdictions necessary to commence construction of the Development (the "Final PUD Approval").

iv. Timeline of Initial Deliverable. Developer shall have eighteen (18) months from the Effective Date of this Agreement to receive Final PUD Approval.

v. Right of First Refusal. Upon Final PUD Approval, Developer shall have the exclusive right and option to purchase the Property (the "ROFR") at the appraised value of Two Hundred Forty-Five Thousand and 00/100 Dollars ($245,000.00). Developer shall have ninety (90) days from the date of receipt of Final PUD Approval to exercise the ROFR. The purchase shall be governed by the standard IDA Purchase and Sale Agreement attached hereto as Exhibit D.

3. **DELIVERABLES.** To be considered in compliance with this Agreement, Developer shall provide proof satisfactory to the IDA that the following deliverables (collectively, the "Deliverables") have been met prior to receipt of the Development Incentives:

i. Written verification and proof satisfactory to the IDA that all initial community improvements (the "Initial Improvements") have been completed and installed. The Initial Improvements to be completed shall include, but shall not be limited to:

1. All roadways constructed and permitted pursuant to Hardee County roadway standards as they may apply to private roadways within the County, provided that such roadways shall be paved with asphalt.
2. Stormwater management systems constructed and permitted pursuant to all applicable federal, state, and local regulations.
3. Installation of at least one (1) entry sign facing the main accessway to the Development substantially similar to the signage depicted in Exhibit C.
4. Public water and sewer have been installed sufficient to serve each building lot.

ii. Complete copy of the Declaration of Restrictive Covenants (the "Declaration") in substantially similar form as attached in Exhibit A. Such Declaration shall include restrictions prohibiting mobile/manufactured housing and transient housing. The Declaration may allow for leasing within the Development, provided that any lease agreement

for a residential dwelling may not be for a period of less than 12 months.

iii. Complete copies of any and all homeowners' association documents (including the above-described Declaration), showing proof satisfactory to the IDA that prior to commencement of vertical construction of residential units, enforceable provisions are recorded and in place to ensure the construction and maintenance of future improvements to the Development (the "Future Improvements"). The following Future Improvements will be constructed throughout the buildout of individual lots and shall be maintained by the homeowners' association or individual homeowners, as applicable, upon completion of the Development:

1. Adequate landscaping throughout the Development to include the requirement for sodded yards, irrigation, and at least one (1) tree in each front yard and shrubbery along the front elevation of each home. For multi-family property where the common areas are to be maintained by a homeowners' association, landscaping shall be substantially similar to the landscape plan attached as Exhibit A.

2. Adequate street lighting throughout the Development as depicted on the lighting plan attached as Exhibit B.

3. Provision for concrete sidewalks to be maintained by the homeowners' association. Such sidewalks shall be a contiguous and connected network throughout the entirety of the Development and shall be constructed and maintained on both sides of all roadways within the Development.

4. All homeowners shall be required to connect to water and sewer systems when available to the Development pursuant to and in compliance with Section 381.00655(1)(b), Florida Statutes (2024).

5. Identification of the maintenance entity for the roadways within the Development.

iv. Complete development approval packages previously provided to the applicable governing authorities.

v. Traffic impact statements, if not previously provided to applicable governing authorities.

4. **AGREEMENT AS TO DELIVERABLES.** Upon completion of all Deliverables in Paragraph 3 above, Developer shall submit a letter to the IDA requesting review of the Deliverables for compliance with this Agreement. Upon receipt of the letter, the IDA shall have thirty (30) days to review the Deliverables and determine whether the Deliverables are in compliance with this Agreement and the previously-approved exhibits. If a determination is made by the IDA that such Deliverables are in compliance with this Agreement and the previously-approved exhibits, the IDA shall issue a written letter of compliance to the Developer and provide instructions for receipt of the Development Incentives.

If a determination is made by the IDA that such Deliverables are not in compliance with this Agreement, the IDA shall issue a letter of noncompliance outlining the reasons for the noncompliance, and the Developer shall have thirty (30) days to respond to the noncompliance letter with a proposal to remedy the noncompliance or appeal the finding of noncompliance to

the IDA Board. If Developer chooses to remedy the noncompliance, Developer shall, within the 30-day time period, submit a proposal outlining the proposed remedies with the opportunity to meet with IDA staff to determine if the proposal brings the development into compliance with the Exhibits previously approved by the IDA Board. If Developer chooses to appeal the noncompliance to the IDA Board, Developer shall submit a written request to IDA staff to be placed on the next regular Board meeting agenda. Such written request shall include submission of alternative deliverables for the IDA Board to review prior to the Board meeting, and Developer will be required to attend the IDA Board meeting at which the request is made. Should the IDA Board approve the alternative deliverables as presented, IDA staff shall have five (5) business days following the IDA Board meeting to issue a letter of compliance.

5. **TIMELINE AND EXTENSION OF TIME FOR DELIVERABLES.** Developer shall have a total of eighteen (18) months from the closing date of the Property to receive a letter of compliance from the IDA stating that all Deliverables have been met. Performance may be suspended for up to a period of six (6) months by either party in case of Act of God, war, riots, fire, explosion, flood, strike, lockout, injunction, or any cause beyond the control of such party, preventing the performance of this Agreement. If Developer does not receive a letter of compliance within the time period provided herein, the Development Incentives will be considered forfeited, and Developer must submit a new request to the IDA Board for consideration.

6. **INCETIVES DISCRETIONARY.** Developer understands and agrees that the Development Incentives are being offered to Developer upon request and as an incentive for providing high quality housing developments in Hardee County. Approval and grant of the Development Incentives are solely the discretion of the IDA Board. The IDA and the IDA Board are in no way obligated to provide such Development Incentives prior to the adoption and full execution of this Agreement upon which all provisions of this Agreement shall be binding upon the parties.

7. **NOTICES.** Any notices provided for in this Agreement shall be in writing to the addresses set forth below and shall be effective (a) upon receipt or refusal if delivered personally; (b) one (1) business day after deposit with a recognized overnight courier; (c) two (2) business days after deposit in the U.S. mail; or (d) one (1) business day after transmission by electronic mail.

If to the IDA:

Hardee County Industrial Development Authority
Attn: Sarah Evers
107 E. Main Street
Wauchula, FL 33873
Sarah.evers@thedevelopmentgroup.net

If to the Developer:

Higher Development, LLC
Attn: Travis Maldonado
202 N 6th Avenue
Wauchula, FL 33873

8. **SUCCESSORS AND ASSIGNS.** This Agreement shall inure to the benefit of and be binding upon the Parties hereto and their respective heirs, executors, representatives, successors and assigns. Developer shall not have any right to assign its rights under this Agreement without prior written consent of the IDA, in the IDA's sole discretion. Any assignment without such written consent shall be void.

9. **ENTIRE AGREEMENT.** This Agreement contains the entire Agreement between the Parties, and all other representations, negotiations, and agreements, written and oral, including any letters of intent which pre-date the Effective Date hereof, with respect to this Agreement or any portion hereof, are superseded by this Agreement and are of no force and effect. This Agreement may be amended and modified only by an instrument, in writing, executed by all Parties hereto.

10. **CHOICE OF LAW AND VENUE.** This Agreement shall be deemed a Florida contract and construed according to the laws of such state, regardless of whether this Agreement is being executed by any of the Parties hereto in other states or otherwise. The proper and exclusive venue for any action concerning this Agreement shall be the Circuit Court in and for Hardee County, Florida. The IDA and the IDA Board do not waive sovereign immunity. The IDA and the IDA Board's liability under and relating to this Agreement, if any, is subject to and limited by Section 768.28, Florida Statutes.

11. **NO WAIVER OF SOVEREIGN IMMUNITY.** Nothing in this Agreement shall be deemed or construed in any manner as a waiver of any privilege, immunity, limits of liability or other protections which are provided or available to the IDA under the doctrine of sovereign immunity or the limitations of liability as provided by Section 768.28, Florida Statutes, and nothing in this Agreement shall inure to the benefit of any third-party for the purpose of allowing any claim which would otherwise be barred under the doctrine of sovereign immunity or operation of law.

12. **WAIVER OF JURY TRIAL.** THE PARTIES WAIVE THE RIGHT TO A TRIAL BY JURY IN ANY ACTION OR PROCEEDING BASED UPON, OR RELATED TO, THE SUBJECT MATTER OF THIS AGREEMENT. THIS WAIVER IS KNOWINGLY, INTENTIONALLY, AND VOLUNTARILY MADE BY EACH PARTY AND EACH PARTY EXPRESSLY ACKNOWLEDGES THAT NEITHER THE OTHER PARTY NOR ANY PERSON ACTING ON BEHALF OF THE OTHER PARTY HAS MADE ANY REPRESENTATIONS OF FACT TO INCLUDE THIS WAIVER OF TRIAL BY JURY OR IN ANY WAY TO MODIFY OR NULLIFY ITS EFFECT. EACH PARTY ACKOWLEDGES TO THE OTHER THAT IT HAS READ AND UNDERSTANDS THE MEANING AND EFFECT OF THIS WAIVER PROVISION.

IN WITNESS WHEREOF, the Parties have hereunto set their hand and seal on the date and year first above written.

HARDEE COUNTY INDUSTRIAL DEVELOPMENT AUTHORITY, a dependent special district and body politic and corporate of the State of Florida

By:_____
Robert C. Idsardi, Chair

ATTEST:

_____

Name:_____

Date:_____

HIGHER DEVELOPMENT, LLC, a Florida limited liability company

By: _____

Print Name: _____

Its: _____

DECLARATION OF COVENANTS, RESTRICTIONS, LIMITATIONS AND CONDITIONS

SANDHILL COMMONS

THIS DECLARATION is made effective this _____ day of _____, 2025 by Higher Development, LLC, the Owners of certain lots included in _____ (the "Developer").

W I T N E S S E T H:

WHEREAS, the Owners are the owners of the following described real property located in Hardee County, Florida, to-wit:

See Exhibit "A" attached hereto

hereinafter referred to as the "Property", and

WHEREAS, the Developer desires to impose certain restrictive covenants and conditions on the Property for the benefit of and limitation upon all current owners and subsequent grantees;

NOW, THEREFORE, the following restrictive covenants and conditions are hereby imposed upon each of the lots described above, which restrictive covenants and conditions shall be deemed to be covenants running with the land.

ARTICLE I

DEFINITIONS

As used herein and as used in the Articles of Incorporation and Bylaws of the Association, the following terms shall have the following meanings:

"Articles of Incorporation" shall mean the Articles of Incorporation of the Association in the form attached hereto as Exhibit "B", and all amendments thereto.

"Association" shall mean and refer to SANDHILL COMMON'S Association, Inc., a Florida not-for-profit corporation, its successors and assigns.

"Bylaws" shall mean the Bylaws of the Association in the form attached hereto as Exhibit "C", and all amendments thereto.

"Common Area" shall mean the Surface Water Management System Facilities and the roadways depicted on the plat of the Subdivision.

"Declaration" shall mean this Declaration of Covenants, Restrictions, Limitations and Conditions.

"Directors" shall mean the members of the Board of Directors of the Association and their successors in office, duly elected and serving in that capacity in accordance with the Bylaws.

"District" means the Southwest Florida Water Management District

"Surface Water Management System" shall be part of the Common Area and means the system which is designed and constructed or implemented to control discharges necessitated by rainfall events, incorporating methods to collect, convey, store, absorb, inhibit, treat, use or reuse

water to prevent or reduce flooding, over drainage, environmental degradation, and water pollution or otherwise affect the quantity and quality of discharges from the system. The Surface Water Management System consists of all surface water management facilities, including but not limited to, the Retention Areas, all Drainage Easements depicted on the Plat, all pipe lines, inlets, catch basins, ditches, swales, culverts, water control structures, and other equipment, fixtures and facilities which are a part of the surface water management and storm water drainage systems installed on and serving the Property and the Subdivision and all detention areas, ponds, lakes, flood plain compensation areas, wetlands and any associated buffer areas and wetland mitigation areas, if any.

"Lot" or "Lots" shall mean and include all parcels of land into which the Subdivision has been subdivided as depicted on the plat of the Subdivision, except for the Common Area.

"Member" shall mean every person who or entity which holds membership in the Association.

"Owner" or "Owners" shall mean the holders of the fee simple title to the Lots.

"Property" or "Subdivision" shall mean the Subdivision known as _____, according to the plat thereof recorded in _____ public records of Hardee County, Florida.

ARTICLE II

RESTRICTIONS

Section 1. NUISANCES. No noxious or offensive activity shall be carried on upon any Lot, nor shall anything be done on any Lot or in the Subdivision that may or may become an annoyance or nuisance to the neighborhood.

Section 2. SIGNS. No sign of any kind shall be displayed to the public view on any Lot except for one (1) sign of not more than one (1) square foot identifying the Owner thereof and one (1) sign of not more than five (5) square feet advertising the Lot for sale or rent and except for signs used by a builder to advertise the Lot during the construction and sales period. Any sign supporting any person running for local, state or national political office, not more than three (3) square feet, may be placed on any Lot, but shall not be placed on any Lot prior to three (3) months prior to the date of the election for the political race, and such signs must be removed within one (1) week after the date of such election. Any sign advertising a garage sale , not more than three (3) square feet may be placed on any Lot, but shall not be placed on such lot prior to two (2) weeks prior to the date of the garage sale, and such signs must be removed within three (3) days after the garage sale.

Section 3. TEMPORARY STRUCTURES. No structure of a temporary character, tents, shacks or any outbuildings, shall be used on any Lot at any time as a residence, either temporarily or permanently.

Section 4. PARKING. No unimproved Lot shall be used for parking purposes, nor shall any Lot be used for ingress, egress, utility, or drainage purposes without the express written consent of the Lot Owner.

Section 5. GARAGES AND ACCESSORY BUILDINGS. All single-family residences constructed on any Lot shall be required to have a garage. Said garage will be attached and shall be designed and constructed in an architectural style compatible with the primary structure and approved pursuant to Article VII.

Section 6. MOBILE HOMES. Mobile homes and premanufactured homes are expressly prohibited on any lot for any purpose.

Section 7. USE. Structures located upon any Lot shall be limited to single family residences or duplexes/townhomes used only for residential purposes. Residences may be constructed for individual sale or for rental purposes. The Developer shall retain the discretion to determine which residential product is most suitable for each portion of the property, subject to applicable governmental approvals and regulations. No Lot shall be used for transient housing.

Section 8. DRIVEWAYS. At the time of the construction of the dwelling on each Lot, a driveway from the garage to the street right-of-way adjacent to the Lot, or shared access to a designated parking area for multiple units, shall be paved with cement or asphalt.

Section 9. MAINTENANCE BY OWNER. Each Lot Owner shall be obligated to maintain and repair the residence on such Owner's Lot, all buildings, fixtures and appurtenances and all landscaping located on such Owner's Lot, except to the extent of the obligations of the Association, in a good, attractive condition so that they do not detract from the Subdivision. Each Lot Owner agrees to maintain and trim the vegetation in the road right of way adjacent to such Owner's Lot and agrees to maintain and trim the vegetation located within all drainage swales and drainage easements located on such Owner's Lot. Failure to perform said maintenance activities permits the Association to enter upon the Owner's Lot and perform the necessary maintenance.

Section 10. UTITLIES. 4. All residential properties shall be required to connect to water and sewer systems when available to the development pursuant to and in compliance with Section 381.00655(1)(b), Florida Statutes (2024).

ARTICLE III

ASSOCIATION

Section 1. HOMEOWNER'S ASSOCIATION. The Association has been or shall be incorporated and has articles of incorporation and bylaws in the form of the Articles of Incorporation and Bylaws. The Owners of all Lots in the Subdivision shall be members of the Association. By acceptance of a Deed conveying a Lot in the Subdivision, each Lot Owner agrees to be bound by all of the terms, conditions, and provisions of the Articles of the Incorporation and Bylaws of the Association. Membership in the Association shall be appurtenant to the ownership of Lots in the Subdivision and may not be transferred separate from the ownership of a Lot. All Members may be required to pay an annual assessment to the Association to cover the expenses of the Association.

Section 2. RIGHTS OF ASSOCIATION. The Association has the right, but not the duty, to:

(a) Enforce the provisions of this Declaration of Covenants, Conditions, and Restrictions.

(b) Maintain the Surface Water Management System Facilities in accordance with the requirements of the Southwest Florida Water Management District and the laws,

rules and regulations of other governmental entities having jurisdiction over the Subdivision. This right of maintenance shall include the right to maintain Surface Water Management System Facilities within the Subdivision if the Lot Owner has failed to maintain such Surface Water Management System Facilities and after at least thirty (30) days written notice to the Lot Owner advising such Lot Owner of the failure to maintain such Surface Water Management System Facilities and the steps needed to cure such failure. The maintenance right shall also include the right to assess the costs of such maintenance against the Lot Owner who has failed to maintain such Surface Water Management System Facilities, and all Lot Owners hereby grant the Association an easement or license to enter upon all Lots within the Subdivision for this maintenance purpose.

(c) Own the Common Area, free and clear of all encumbrances, except for real estate taxes and assessments.

(d) Pay all real estate taxes and tangible personal property taxes assessed with respect to any real or personal property owned by the Association.

(e) Maintain and repair any road, fence, wall or other buffer now or hereafter located within the Common Area and replace any such road, fence, wall or other buffer, unless the damage requiring the repair or replacement is caused by the negligent or intentional act or omission of an Owner or a person under the supervision or responsibility of such Owner, in which event such Owner shall be responsible for paying the cost of the repair or replacement of the road, fence, wall or other buffer. This maintenance right shall include the right to maintain or improve traffic control signs, subdivision designation signs, and roadway name designations.

(f) Maintain, replace, fertilize, irrigate and keep in a healthy condition, all plants, grass and other vegetation, and regularly cut the grass, in all areas which are the responsibility of the Association to maintain lying within the Common Area. This maintenance right shall include the right to pay all water bills for any water used in connection with landscaping which is the responsibility of the Association to maintain.

(g) Maintain, repair and replace lighting for decorative effect or security purposes within the Subdivision entrance, Common Area or right of way. This maintenance right shall include the right to pay all electric bills for such lighting.

(h) Provide public liability insurance in such amounts and with such coverage as the Directors shall determine from time to time appropriate.

(i) Provide fire and casualty insurance to insure any improvements, fixtures or equipment now or hereafter owned by the Association.

(j) Construct improvements within or remove improvements from the Common Area, but only after a two-thirds majority of the Members present and voting at a meeting of the Members duly called and held pursuant to the Bylaws approve such construction or removal.

(k) Maintain, repair and replace all improvements now existing or hereafter constructed within the Common Area, and to promulgate Rules and Regulations for the use of such Common Areas.

(l) Maintain security within the Subdivision, including the right to initiate a Neighborhood Crime Watch Security Program or other similar program for the benefit of all Lot Owners in the Subdivision.

(m) Grant such easements across the Common Area for public utility purposes as may be necessary to provide utilities to any Lot.

(n) Perform such other maintenance, repair and replacement as the Directors shall determine to be in the best interest and for the purpose of promoting the health, safety, general welfare and benefit of the Members and the Subdivision. This maintenance right shall include the right to maintain improved or unimproved Lots within the Subdivision if the Lot Owner has failed to maintain such Lot and after at least thirty (30) days written notice to the Lot Owner advising such Lot Owner of the failure to maintain such Lot and the steps needed to sure such failure. The maintenance right shall also include the right to assess the costs of such maintenance against the Lot Owner who has failed to maintain such Lot, and all Lot Owners hereby grant the Association an easement or license to enter upon all Lots within the Subdivision for this maintenance purpose.

(o) As used herein the term "maintain" and "repair" shall mean the exercise of the normal care reasonably necessary to keep the item requiring maintenance or repair in good operating condition or in the functional condition intended at the time of its original installation and in conformance with all applicable laws, required permits and governmental approvals, and aesthetically pleasing as to landscaping and planted areas.

(p) To maintain an Annual Budget for the purposes of carrying out the duties of the Association, including the right to set Annual or Special Assessments and collect such Annual or Special Assessments from each Member, and to create and enforce liens for unpaid Annual or Special Assessments against Lots as provided in the Bylaws, including interest at the default rate, costs and expenses of collection, and attorneys fees incurred by the Association. Notwithstanding the foregoing, any lien in favor of the Association shall be subordinate to any mortgage lien of any financial institution having a mortgage on any Lot, regardless of whether such mortgage was of record before or after such lien. In addition, any financial institution which acquires title to any Lot either through a deed in lieu of foreclosure or though foreclosure proceedings shall have no obligation to pay any Annual or Special Assessments which have accrued prior to the time such financial institution acquires such title.

(q) To deny the rights of any Member not in good standing with the Association, if such Member is not in good standing due to such Member's failure to pay any Annual or Special Assessments. Such denial may include, without limitation, the denial of the right to vote at Association meetings, the denial of the right to hold any office in the Association, and the denial of the right to use any Common Area and the facilities thereon.

(r) Maintain, repair, and replace all sidewalks constructed within the development

ARTICLE IV

ASSESSMENTS

Section 1. CREATION OF ASSESSMENT AND LIEN. Each owner of any Lot by acceptance of a deed for such Lot agrees to pay assessments levied by the Association, whether such obligation is expressly stated in such deed. Assessments not timely paid, together with interest and cost of collection, including court costs and attorneys' fees, shall become a lien on upon the property against which each assessment is made. Assessments shall only be made against Lots which have been improved by the construction of a dwelling as evidenced by the issuance of a Certificate of Occupancy.

Section 2. INITIAL ASSESSMENT. Upon the first sale of an improved Lot an initial assessment of $300.00 (three hundred dollars) shall be made against such Lot. The Initial Assessment shall be due upon the closing of the sale of such Lot.

Section 3. ANNUAL ASSESSMENTS. The Association shall establish the Annual Assessment pursuant to a budget and through the procedure established in the Articles of Incorporation and Bylaws.

Section 4. SPECIAL ASSESSMENTS. The Association shall establish Special Assessments when necessary through the procedure established in the Articles of Incorporation and Bylaws.

Section 5. MAINTENENCE ASSESSMENTS. When the Association performs maintenance activities pursuant to Article III, Section 2, paragraph (n), the cost of such maintenance shall constitute a Maintenance Assessment against the Lot upon which the maintenance activities are conducted.

ARTICLE V

SURFACE WATER MANAGEMENT SYSTEM FACILITIES

Section 1. The Surface Water Management System for the Subdivision is to be operated and maintained by the Association in conformance with the requirements of applicable governmental agencies, the applicable Permits and Applicable Laws. The Association shall be responsible for assuring to the District that the operation and maintenance and re-inspection reports are performed in accordance with the terms, conditions and provisions of the Permits issued by the District. Any proposed amendment to this Declaration or the Bylaws affecting the Surface Water Management System (including environmental conservation areas, if any, and the water management portions of the Common Area) shall be submitted to the District for a determination of whether the proposed amendment necessitates a modification of the environmental resource permit. If a modification is necessary, the District will so advise the Association. The amendment affecting the Surface Water Management System shall not be adopted until any necessary permit modification is approved by the District or the District advises the Association that a permit modification is not necessary. Without the prior approval of the District and the Association, no construction activities may be conducted within or on any portion of the surface water management system, including the Surface Water Management System, which shall include: digging or excavation; depositing fill, debris or any other material or item; constructing or altering any water control structure; or any other construction to modify the Surface Water Management System. The Association has the right to perform such construction and maintenance activities as are consistent with the applicable Permits and in accordance with the Applicable Laws, so long as the design of the Surface Water Management System remains unchanged.

Section 2. At the time of the construction of a building, residence or structure on a Lot in the Subdivision, the Owner of the Lot shall comply with the construction plans for the Surface Water Management System approved and on file with the District. The District shall have the right to take enforcement measures, including civil action, for injunction and/or penalties against the Association to compel performance or correction of any outstanding problems with the Surface Water Management System. No Owner may construct or maintain any building, residence or structure or undertake or perform any activities in any jurisdictional wetlands, buffer area and drainage easements as depicted upon the Plat or as described in the Permits and the recorded Plat, unless prior approval is received by the District through its Bartow Service Office. Without the prior written approval of the District, there shall be no amendment to this Declaration which would affect the Surface Water Management System and the responsibility for maintenance of the foregoing.

Section 3. If there is included within the Subdivision a wetland mitigation area, as defined in accordance with Applicable Laws, or wet detention pond, no vegetation in those areas shall be removed, cut, trimmed or sprayed with herbicide, without the specific written approval from the District. If there is on-site wetland mitigation within the Subdivision, the Association shall allocate sufficient funds in its budget for monitoring and maintenance of the wetland mitigation areas each year until the District determines that the areas are successful in accordance with the applicable Permits. If the funds allocated in the Association's budget for any year are not sufficient to provide adequate funds to perform the monitoring and maintenance obligations of the Association under the applicable permits, the Association shall so advise the District in writing within fifteen (15) days of the adoption of the budget.

Section 4. While the Association is intended to exist in perpetuity in accordance with the Articles, in the event In the event of termination, dissolution or final liquidation of the Association, the responsibility from the operation and maintenance of the Surface Water Management System shall be transferred to and accepted by an entity which complies with Rule 62-330.310, F.A.C., and the Applicant's Handbook Volume I, Section 12.3, and be approved by the Southwest Florida Water Management District prior to such termination, dissolution or liquidation.

Section 5. The District shall have the right to enforce, by a proceeding at law or in equity, the provisions contained in this Declaration which relate to the maintenance, operation and repair of the Surface Water Management System.

ARTICLE VI

COMMON AREAS

Section 1. COMMON AREAS. The Common Area and all portions thereof shall be reserved solely for the use of the Members of the Association. No boats, vehicles, or trailers may be stored on or in the Common Area. Persons who are not Members of the Association may not use the Common Area unless they are accompanied by a Member of the Association.

ARTICLE VII

ARCHITECTURAL CONTROL

Section 1. ARCHITECTURAL CONTROL COMMITTEE. All Lots and improvement of Lots in the Property shall be subject to architectural review in accordance with this Article. No site work, land clearing, grading, paving, driveway, swimming pool or related enclosure, building or change or alteration to the exterior of any structure shall be commenced until the plans for such shall be approved by Architectural Control Committee ("ACC") in accordance with the Architectural Control Standards ("ACS") adopted herein. So long as the Declarant owns at least one (1) Lot subject to this Declaration, Declarant shall be entitled to appoint all the members of the ACC. Thereafter the Board shall appoint the members of ACC. The ACC shall consist of no less than three (3) individuals, none of which are required to be Owners. The Board shall have the authority to remove and reappoint members of the ACC at its sole discretion.

Section 2. APPROVAL. Applications for improvements subject to this Article shall be made in writing, on forms adopted by the ACC. Applications shall include plans prepared by an engineer or architect, unless waived by the ACC. Decisions of the ACC shall be by majority decision, but meetings of the ACC need not be noticed or open to the application. Approvals or disapproval by the ACC shall rendered within thirty (30) days after submission of the application. Any disapproval shall include a written explanation of the reason for disapproval. Disapproval by the ACC shall not be limited to the specific criteria of the ACS, but may also be due characteristics of the proposed improvements such as elevation, location, height, color, material selection, landscaping or other factors which the ACC determines to be inconsistent with the overall development plan or not in harmony with the character of the development. If the ACC disapproves an application the applicant may appeal the decision to the Board by submitting a written request to the Board within thirty (30) days following the decision of the ACC. The Board shall review the appeal and render a decision on the appeal within forty five (45) days of submission of the appeal. The Board may uphold, reverse or modify the decision of the ACC.

The final decision of the ACC, and any appeal, shall be valid for a period of twelve (12) months within which time all approved improvement must be completed.

Section 3. ARCHITECTURAL CONTROL STANDARDS. All improvements in the Property must comply with the following:

(a) All dwellings shall be constructed with masonry construction on a concrete slab. External surfaces shall be covered with brick, stucco or lapboard siding. In no instance shall any exterior surface be painted concrete block.

(b) Roofs must be a minimum of 5:12 pitch and contain at least one (1) gable.

(c) Any detached structures must be constructed with the same materials as the primary structure.

(d) All single-family residences must have an attached garage.

(e) Driveways shall be paved with asphalt or concrete.

(f) All single – family residences shall contain a minimum of one thousand two hundred (1,200) square feet of finished living area. Duplexes/Townhomes shall be permitted in sizes and configurations as determined by the Developer, based on applicable setbacks, lot dimensions, site conditions and the approved development plan. Size, layout, and placement of such structures shall be subject to applicable governmental requirements and approvals.

(g) Above-ground and under-ground swimming pools are prohibited.

(h) All homes must be landscaped and irrigated to include a sodded yard, a minimum of one (1) tree in the front yard and shrubbery along the front elevation of the home.

(i) The exterior of all structures on a Lot must be painted with a neutral, muted color palette.

(j) Any fencing on any lot shall be constructed of white PVC only.

(k) SIDEWALKS. Concrete sidewalks shall be constructed throughout the development in accordance with the approved development plans. Sidewalks shall form a continuous and connected network throughout the development and shall be constructed along both sides of roadways with the development.

ARTICLE VIII

EASEMENTS

Section 1. SPECIFIC EASEMENTS. Easements for roadways, street lighting and utilities and Surface Water Management System Facilities are reserved as shown on the recorded plat of the Subdivision. Within these easements, no structure, planting or other material shall be placed or permitted to remain which may damage or interfere with the installation or maintenance of roadways, utilities and Surface Water Management System Facilities.

Section 2. GENERAL EASEMENTS. The Developer reserves any and all easements over the entire of the Property as may be necessary to construct and maintain roadways, utilities and Surface Water Management System Facilities. Such easements shall survive so long as the

Developer has any maintenance responsibility pursuant to any permit issued by any governmental entity or contract.

ARTICLE IV

MISCELANEOUS PROVISIONS

Section 1. DURATION. The provisions of this Declaration are imposed upon the Property for a term of twenty-five (25) years from the date this Declaration is recorded and shall automatically be extended for successive ten (10) year periods unless and until they are amended as hereinafter provided.

Section 2. ENFORCEMENT. The Association or any Lot Owner shall have the right to enforce, by any proceeding at law or in equity, all of the restrictions, conditions and covenants imposed by this Declaration. The failure to enforce, in whole or in part, any of the said restrictive covenants or conditions for any length of time shall not be a waiver of the right to enforce such restrictions.

Section 3. AMENDMENT. The provisions of this Declaration may be amended by an instrument in writing signed by not less than seventy-five percent (75%) of the Lot Owners.

Section 4. ATTORNEYS FEES AND COSTS. In connection with any litigation arising under any provision of this Declaration, the prevailing party shall be entitled to recover all costs and expenses incurred in connection therewith, including reasonable attorney's fees.

Section 5. SEVERABILITY. The invalidation by any Court of any provision of this Declaration shall not in any way affect any of the other provisions which shall remain in full force and effect.

Section 6. BENEFIT. The foregoing restrictive covenants and conditions shall constitute covenants running with the land and the provisions of this Declaration shall be binding upon and shall be for the benefit of all of the present and future owners of any of the lots, their heirs, devisees, personal representatives, grantees, successors and assigns.

SIGNED effective the day and year first above written.

WITNESSES:

_____

_____

Print Name:_____

_____

Print Name:_____

State of Florida
County of Hardee

The foregoing instrument was acknowledged before me this ___ day of _____ by _____ who [ ] are personally known or [_] have produced _____ as identification.

_____

[Notary Seal]

Printed Name: _____

My Commission Expires: _____

K:\CLIENTS\Maldonado, Travis (MALD)\Longwood Ranch\2024.05.03 HOA DECLARATION LONGWOOD RANCH DRAFT.docx

EXHIBIT "A"

Legal Description

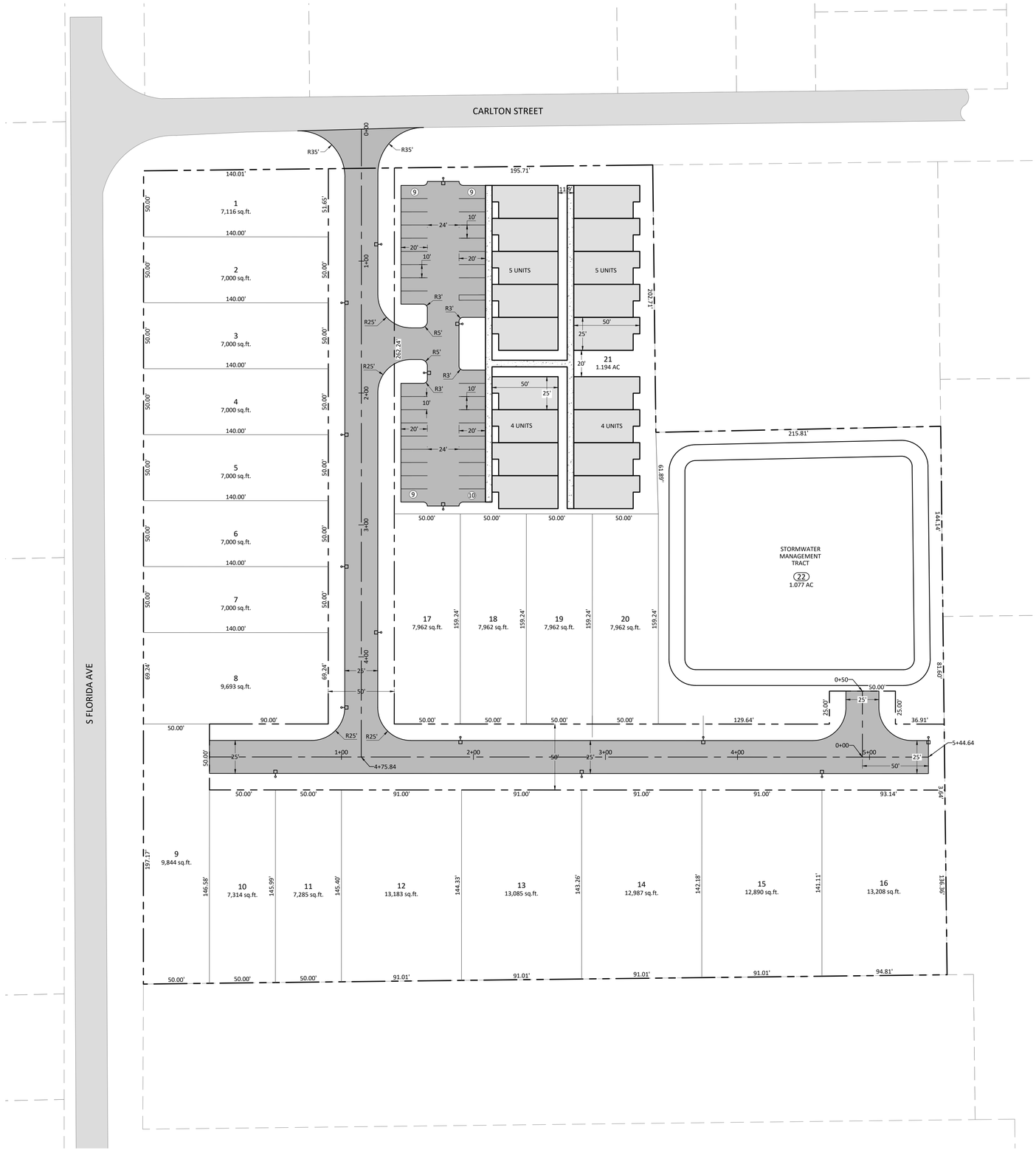

SITE CHARACTERISTICS

PARCEL INFORMATION:

PARCEL ID:	09-34-25-0000-07520-0000
PROPOSED USE:	MIXED USE
FLOOD AREA:	12049C0187D
ZONING / LAND USE:	A-1 (AGRICULTURAL LOW DENSITY)
PARCEL AREA:	8.118 AC

BUILDING SETBACKS (R1A/R-1):

FRONT:	25'/20'
SIDE:	10'/10'
REAR:	30'/25'

PARKING STATISTICS

REQUIRED PARKING:
1.75 PACE PER UNIT + 1 SPACE PER 4 UNITS = 37 SPACES

PROVIDED PARKING:

STANDARD SPACES	35 SPACES
HANDICAP SPACES	2 SPACES
TOTAL PARKING PROVIDED =	37 SPACES

N
W E
S

0 40 80
FEET

LEGEND

- PROPOSED CONCRETE
- PROPOSED PAVEMENT
- EXISTING CONCRETE
- EDGE OF EXISTING PAVEMENT
- POND AND DITCH TOB AND TOS
- BUILDING SETBACK LINES
- EXISTING LOT LINES
- EASEMENT LINE
- RIGHT OF WAY
- EDGE OF CONCRETE
- PROPOSED FENCE LINE
- EDGE OF PAVEMENT
- PROPOSED STRIPING
- BACK OF CURB
- LANDSCAPE BUFFER LINE
- EDGE OF CONCRETE
- PARKING COUNT INDICATOR

③

REVISION NO.	DATE	DESCRIPTION

CHARLES R. BROOKER III, P.E.
LICENSE NO. 88615

THIS ITEM HAS BEEN DIGITALLY SIGNED AND SEALED BY CHARLES R. BROOKER III, P.E. ON THE DATE ADJACENT TO THE SEAL.
SIGNATURE MUST BE VERIFIED ON ANY ELECTRONIC COPIES.

04/04/2026

CLIENT:
PROJECT NAME: CARLTON STREET MIXED USE DEVELOPMENT

PRELIMINARY SITE PLAN

WAUCHULA, FL 33873

TRADITIONS ENGINEERING

811 Know what's below. Call before you dig.

PROJECT NUMBER
26-49

SHEET NUMBER
1 OF 2

EXHIBIT B

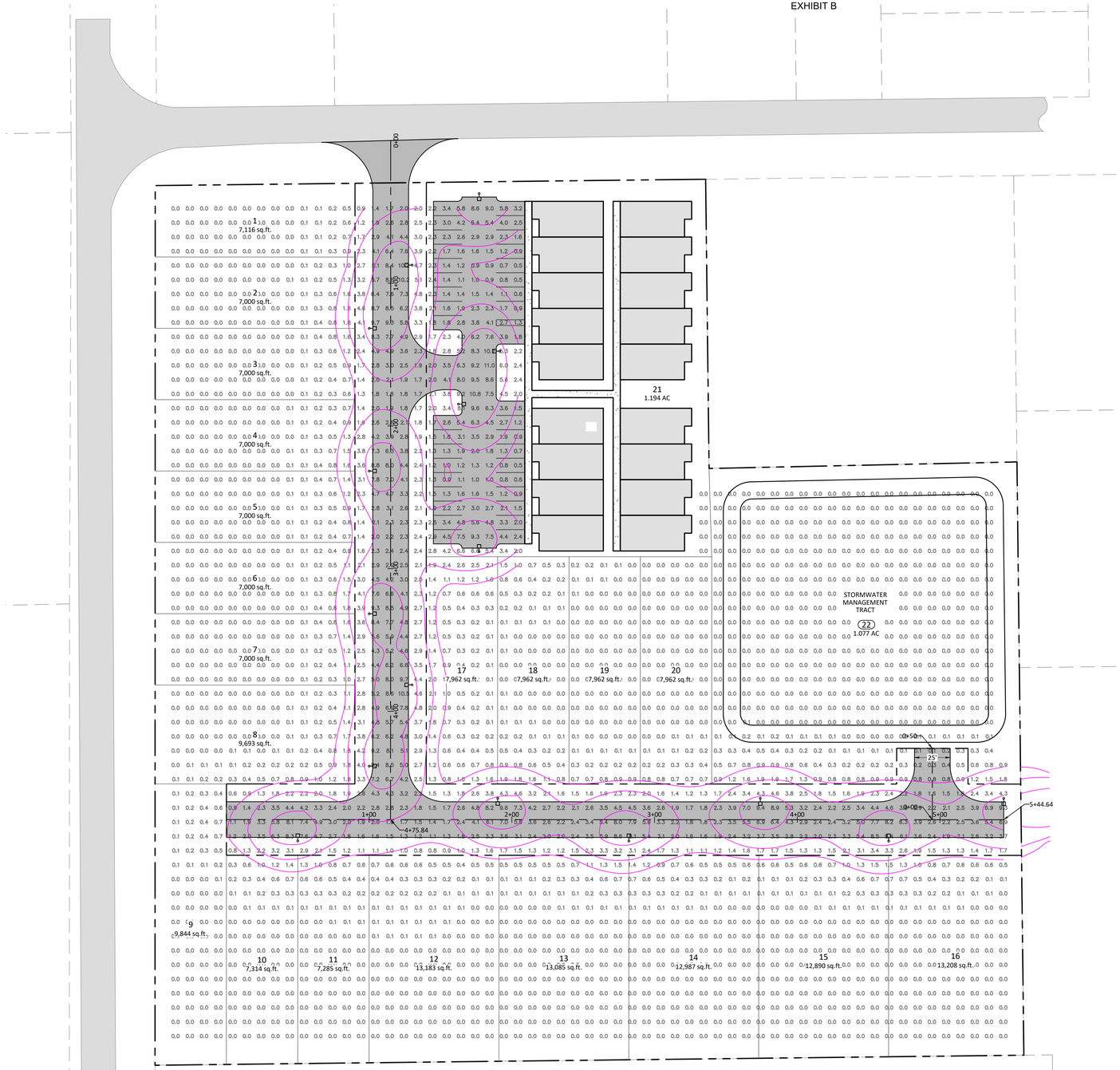

GENERAL PHOTOMETRIC SCHEDULE

AVERAGE FOOT-CANDLES	0.9
MAXIMUM FOOT-CANDLES	11
MINIMUM FOOT-CANDLES	0
MINIMUM TO MAXIMUM FC RATIO	0
MAXIMUM TO MINIMUM FC RATIO	45204
AVERAGE TO MINIMUM FC RATIO	3908.9

N W E S

0 40 80 FEET

LEGEND

- PROPOSED CONCRETE
- PROPOSED PAVEMENT
- EXISTING CONCRETE
- EDGE OF EXISTING PAVEMENT
- POND AND DITCH TOB AND TOS
- BUILDING SETBACK LINES
- EXISTING LOT LINES
- EASEMENT LINE
- RIGHT OF WAY
- EDGE OF CONCRETE
- PROPOSED FENCE LINE
- EDGE OF PAVEMENT
- PROPOSED STRIPING
- BACK OF CURB
- LANDSCAPE BUFFER LINE
- EDGE OF CONCRETE
- PARKING COUNT INDICATOR

③

REVISION NO.	DATE	DESCRIPTION

CHARLES R. BROOKER III, P.E.
LICENSE NO. 88615

THIS ITEM HAS BEEN DIGITALLY SIGNED AND SEALED BY CHARLES R. BROOKER III, P.E. ON THE DATE ADJACENT TO THE SEAL.
SIGNATURE MUST BE VERIFIED ON ANY ELECTRONIC COPIES.

04/04/2026

CLIENT:
PROJECT NAME: CARLTON STREET MIXED USE DEVELOPMENT

PRELIMINARY PHOTOMETRIC PLAN

WAUCHULA, FL 33873

TRADITIONS ENGINEERING

PROJECT NUMBER
26-49

SHEET NUMBER
2 OF 2

811 Know what's below. Call before you dig.

ITEM NO.	PART NUMBER	DESCRIPTION	DESCRIPTION 2	QTY.
1	POLE	POLE, DIRECT BURIAL	-	1
2	TEN-0003	TENON 2-3/8"	-	1
3	COV-0001	HAND-HOLE COVER	2.5" x 5"	1

REVISIONS				
ECO	REV.	DESCRIPTION	DATE	INITIALS

FEATURE ORIENTATIONS				
	0°	90°	180°	270°
CABLE ENTRY	X			
HAND HOLE	X			

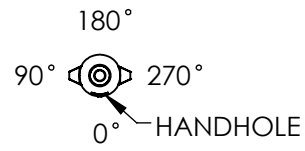

NOTE: ALL HOLES DRILLED ONLY THROUGH THE FACES SPECIFIED BY 'X'

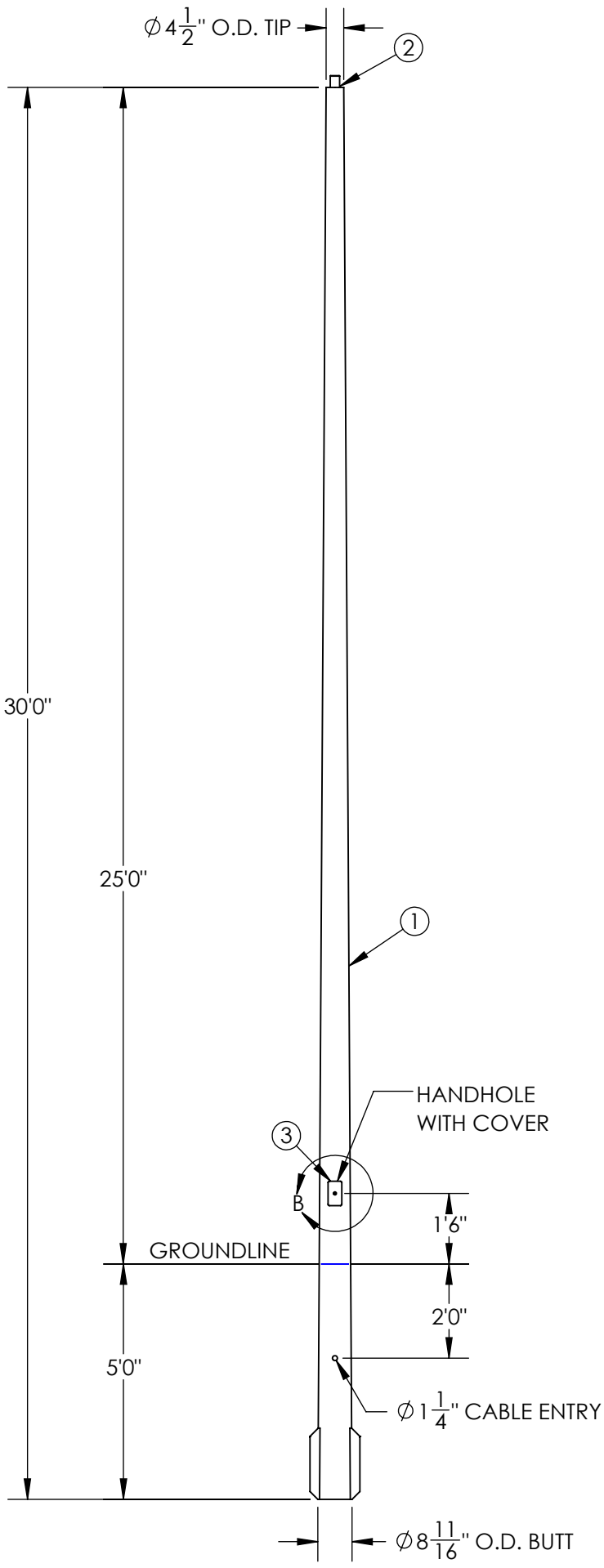

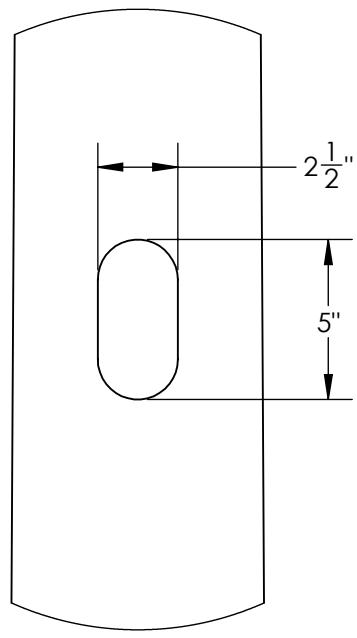

DETAIL B
HANDHOLE CUTOUT
COVER REMOVED FOR CLARITY
SCALE 1 : 6

MAXIMUM EPA PER WINDZONE										
MPH	90	100	110	120	130	140	150	160	170	180
EPA	10.8	7.6	5.8	4.5	3.7	3.5	2.9	2.4	1.9	1.6

NOTES:
1. DIRECT BURIAL CLASS 1 POLE PER ASTM 4923. POLE TOP DEFLECTION SHALL NOT EXCEED 15% OF THE ABOVE HEIGHT AT MAX WIND LOADING AND MAX FIXTURE WEIGHT.
2. DESIGN CRITERIA PER AASHTO LTS-6-2013, ANSI C136.20-2012, AND 2020 FBC 7TH EDITION WHERE APPLICABLE, WITH A MINIMUM SAFETY FACTOR OF 1.5.
3. EMBEDMENT BASED ON MINIMUM DEPTH RECOMMENDED BY ANSI C136.20-2012 SECTION 5.3 AND ASSUMING CLASS 2 SOIL OR BETTER WHEN LOADED AT MAXIMUM EPA.

↓
G = GRAY
A = BLACK
F = BRONZE
W = WHITE
N = GREEN

---UNLESS OTHERWISE SPECIFIED---
DIMENSION UNITS ARE IN FEET AND INCHES
DIMENSIONS SHOWN ARE NOMINAL

STATE:	RELEASED	2022-06-06
DRAWN:	CJM	2022-06-06
CHECKED:	AJH	2022-06-06
APPROVED:	AJH	2022-06-06
REPLACES:	-	

THIRD ANGLE PROJECTION

SOUTHEAST LIGHTING & DESIGN

DESCRIPTION:
POLE SYSTEM, DIRECT BURIAL
STANDARD DUTY, 30 FT

CUSTOMER SIGNATURE:

DATE:

SIZE: B | DWG. NO. SE-DBF-25-30-238 | POLE COLOR: | REV: 0.0

SCALE: 1:28 | SHEET 1 OF 1

EXHIBIT C



VACANT LAND SALE/PURCHASE CONTRACT
(_____Hardee County, Florida)

THIS VACANT LAND SALE/PURCHASE CONTRACT (the "**Agreement**") by and between *** and **** (collectively the "**Purchaser**") and the **HARDEE COUNTY INDUSTRIAL DEVELOPMENT AUTHORITY**, a dependent special district and public body corporate and politic of the State of Florida (the "**Seller**") is entered into and effective on the date it is last executed by the Seller or Purchaser (the "**Effective Date**").

RECITALS:

A. Seller is the owner of certain real property located in Hardee County, Florida as more specifically depicted and described on the attached Exhibit "A".

B. Seller wishes to sell to Purchaser, and Purchaser wishes to purchase from Seller the Property as hereafter defined upon the terms, covenants, and conditions hereinafter set forth.

NOW, THEREFORE, in consideration of the mutual covenants contained herein, and for other good and valuable consideration, the receipt and adequacy of which is hereby acknowledged, the parties covenant and agree as follows:

1. **Sale of Property**. Subject to the terms and conditions hereinafter set forth, Seller agrees to sell, convey, and assign (to the extent assignable) to Purchaser, and Purchaser agrees to buy from Seller, that certain real property located in Hardee County, Florida, shown or described on Exhibit "A", which exhibit is attached hereto and made a part hereof, together with all appurtenances, easements, and privileges thereto belonging (the "**Property**"). Purchaser acknowledges that he/she is solely responsible for applying for and obtaining all local government approvals as to the Property, including approval to subdivide the Property, rezone the Property, or vacate the Property from a plat, if appropriate or applicable -- the Property is being sold by Seller as-is, where-is.

2. **Definitions**. For purposes of this Agreement, the following terms are defined as hereinafter set forth: "**Closing**" shall mean the execution and delivery of the Transaction Documents and the payment of those funds required to be paid at the time and in the manner required herein for the purchase and sale of the Property. "**Closing Date**" shall mean the date on which the Closing occurs. "**Encumbrance**" shall mean and include any charge, claim, condition, equitable interest, lien, option, pledge, security interest, right of first refusal, or restriction of any kind, including any restriction on use, transfer, receipt of income, or exercise of any other attribute of ownership. "**Survey**" shall mean a survey of the Property certified by a Florida Registered Land Surveyor. "**Transaction Documents**" shall mean this Agreement and all of the documents required or contemplated in connection with the Closing of the purchase and sale of the Property.

3. **Price / Deposits / Financing**. The total Purchase Price for the Property shall be**_____ Dollars ($_____)** ("**Purchase Price**"). The Purchase Price shall be due and payable as follows:

A. Within three (3) Business Days of the full execution of this Agreement, Purchaser will deposit the amount of **_____ Dollars ($_____)** (the "**Earnest Money Deposit**") with MidSouth Title (formerly Wauchula Abstract & Title, Inc.) as escrow agent (the "**Escrow Agent**") who will also serve as title agent and closing agent. The Earnest Money Deposit shall be credited to the Purchaser at the time of the Closing (as hereinafter defined).

B. The remaining balance shall be paid to Seller at Closing in immediately available funds (e.g., wire transfer), subject to adjustments and prorations.

4. **Execution / Calculation of Time / Time of the Essence**.

A. Execution. This Agreement may be executed in any number of counterparts, each of which shall be deemed to be an original as against any party whose signature appears thereon, and all of which together shall constitute one and the same instrument. This Agreement shall become binding when one or more counterparts shall bear the respective signatures of all of the parties designated as signatories herein. If this Agreement shall be executed in counterparts, then upon the subsequent written request of any signatory, all parties shall join in the signing of one complete original instrument. A facsimile or email copy of this Agreement evidencing any signatures shall be considered as an original for all purposes.

B. Calculation of Time. All references to days shall mean calendar days unless Business Days are specifically stated. Business Days shall mean Monday through Friday, and exclude legal holidays. If any time period ends on a Saturday, Sunday, or legal holiday, it shall instead be deemed to expire at the end of the next Business Day.

C. Time of the Essence. The Parties have been fully advised and agree that time is of the essence of each provision of this Agreement.

5. **Purchaser's Inspection Period**.

A. Upon the full execution of this Agreement, Purchaser shall have **_____ days** (herein referred to as the "**Inspection Period**") to inspect the Property. Seller shall provide Purchaser and its agents and consultants reasonable access to the Property, provided that in each such case Seller shall have the right to have a representative of Seller present during each such entry. In no event shall Purchaser undertake any physically invasive testing of the Property, without the prior consent of Seller, in Seller's sole discretion. Purchaser shall have the right to make inquiries of governmental bodies, utility companies, and other third parties. Purchaser agrees to indemnify, defend and hold Seller harmless for any claims, liens, suits, actions, damages or other causes of action arising out of the negligent actions of the Purchaser or its employees or agents in connection with any inspections it undertakes in connection with this Agreement and Purchaser shall provide Seller a certificate of insurance providing evidence that Purchaser maintains commercial liability insurance of no less than $1,000,000 per occurrence and naming Seller as additional insured. The indemnification obligations under this paragraph shall survive the termination or closing of this Agreement.

B. In the event that Purchaser determines, in its sole opinion and sole discretion, that the Property or this Agreement is unacceptable for any reason whatsoever, Purchaser (by and through its designee) shall give Seller written notice before the end of the Inspection Period that it intends to terminate the transaction contemplated by this Agreement, and this Agreement shall forthwith and thereupon be terminated, become null and void, and be of no further force and effect, at which time the Escrow Agent shall return the Earnest Money Deposit to the Purchaser. If Purchaser does not give such notice, the contingency shall have expired, and Purchaser shall proceed to Closing.

C. The Parties have been fully advised and agree that time is of the essence with respect to the obligations of the parties under the Inspection Period. If Purchaser does not terminate this Agreement during the Inspection Period according to the terms of this Section 6, then the contingencies set forth in this Section 6 shall have expired, and the parties shall proceed to Closing.

D. **Except as otherwise provided in this Agreement or in the documents to be delivered at Closing, it is expressly understood and agreed that the Property is being sold "as is" and "where is", and with all faults and defects, latent or otherwise. Except as otherwise provided in this Agreement or in the documents to be delivered at Closing, Purchaser shall not rely on any warranties, promises, understandings or representations, express or implied, of Seller or its agents or employees relating to the property being sold under this Agreement and there are no implied representations or warranties with respect to the property being sold under this Agreement. Without limiting the generality of the foregoing disclaimer of representations and warranties, except as may be expressly contained in this Agreement or the documents to be delivered at Closing, Purchaser specifically disclaims any warranties or representations of any kind or character, express or implied. Except with respect to any breach or violation of the representations, warranties or covenants or with respect to matters arising under indemnity obligations, in each case expressly set forth in this Agreement or the documents to be delivered at Closing, from and after the date of Closing under this Agreement, Purchaser for itself, its members, partners, shareholders, officers, directors and employees agrees to waive its right to recover from the other party and forever releases and discharges the other party from any and all costs for any remedial action, damages, claims, losses, liabilities, penalties, fines, liens, judgments, costs, or expenses whatsoever (including, without limitation, attorney's fees), whether direct or indirect, known or unknown, foreseen or unforeseen, that may arise on account of or in any way connected with the physical condition of the property it is purchasing, including, without limitation, the existence of any environmental condition or any hazardous or toxic substances, materials, or wastes, pollutants or contaminants as defined under environmental laws. The terms and provisions of this paragraph shall survive the termination of this Agreement or the Closing of this Agreement.**

6. **Survey**. During the Inspection Period, Purchaser may obtain, at Purchaser's expense and discretion, a survey of the Property (the "**Survey**").

7. **Evidence of Title**. Within ten (10) days prior to the end of the Inspection Period, Seller shall obtain, at **_____'s** expense, a commitment for an owner's title insurance policy, (the "**Title Commitment**"), agreeing to issue to Purchaser, upon recording of a Special Warranty Deed, a title insurance policy in the amount of the Purchase Price, insuring Purchaser's title to the Property. Seller shall provide to the Closing Agent an owners affidavit required to delete standard exceptions (including exceptions for taxes for years prior to the year of Closing) except for the survey exception, and Purchaser shall provide such Survey with required certifications.

A. Objections to Title. If the Title Commitment contains exceptions to coverage, other than the standard exceptions, which adversely affect title to the Property and render title unmarketable and uninsurable, the Purchaser shall notify the Seller, in writing, of Purchaser's objections to such exceptions within twenty (20) days after the Title Commitment and copies of all underlying title search instruments and the Survey have been furnished to Purchaser.

B. Curing Title Objections. Seller shall have thirty (30) days after receipt of such notice in which to either (i) cure such defects (the "**Title Curative Period**") and furnish to the Purchaser evidence that same have been cured or (ii) notify Purchaser in writing that Seller has determined, in Seller's sole discretion, that it is not feasible on a commercially reasonable basis to cure one or more of Purchaser's objections. The Inspection Period and Closing Date shall be postponed and extended for the Title Curative Period. If the title defects are cured within the Title Curative Period, the sale and purchase shall be closed within seven (7) days after written notice to Purchaser, but not earlier than the Closing Date. In the event that Seller is unable to cure such defects within the Title Curative Period, Seller may give notice of necessity to extend the Title Curative Period for an additional ninety (90) days. If Seller fails to cure such defects within the Title Curative Period (as extended, if applicable), or notifies Purchaser in writing that Seller has determined it is not feasible to cure the defect, Purchaser shall have the option to either (i) complete the purchase in accordance with the Agreement and accept title to the Property subject to such objections without any adjustment to the Purchase Price; or (ii) terminate this Agreement by written notice thereof to Seller within seven (7) days either after notice of Seller's failure to cure defect during the Title Curative Period (as extended, if applicable) or after Seller's notice to Purchaser that it is not feasible to cure the defect, whichever is applicable, whereupon this Agreement shall terminate and be of no further force or effect and the Earnest Money Deposit shall be returned to Purchaser.

C. Updates of Title. Purchaser may have the Title Commitment updated by endorsement ("**Update Endorsement**") not less than five (5) days before the Closing Date. If such Update Endorsement discloses any new requirement, defect, Encumbrance or other adverse matter, then Purchaser shall notify Seller in writing specifying the new title defect and providing legible copies of said defect not later than five (5) days before the Closing Date and Seller shall have a period of thirty (30) days following the receipt of such notice from Purchaser to cure such new title defect (the "**Update Curative Period**") and the Inspection Period and Closing Date shall be extended. If Seller fails to cure any such new title defect within the Update Curative Period, Purchaser shall have the option, to be exercised in its sole discretion, to either: (i) complete the purchase in accordance

with the Agreement and accept title to the Property subject to such objections without any adjustment to the Purchase Price; or (ii) terminate this Agreement by written notice thereof to Seller within seven (7) days after Purchaser's receipt of written notice of Seller's failure to cure Purchaser's objections within the Update Curative Period or Seller's determination that curing Purchaser's objections is not feasible, whereupon this Agreement shall terminate and be of no further force or effect and the Earnest Money Deposit shall be returned to the Purchaser, together with all earned interest thereon.

D. Time. The Parties have been fully advised and agree that time is of the essence with respect to the parties' obligations under this Section.

8. **Closing Date and Procedure / Documents to be Provided**.

A. Closing Date. Unless extended by other provisions of this contract or terminated during the Inspection Period, the Closing Date contemplated by this Agreement shall be within _____ days after expiration of the Inspection Period. Closing shall occur remotely, or such place as the parties may agree. The parties have been fully advised and agree that time is of the essence with respect to the Closing Date.

B. Closing Procedure.

(1) Seller. At Closing, if not previously delivered to Purchaser, Seller shall execute and deliver to Purchaser:

(a) A fully executed Special Warranty Deed in favor of Purchaser;

(b) An assignment of any warranties, permits or other intangible personal property relating solely to the Property;

(c) Section 1445 Affidavit;

(d) An owners affidavit in form reasonably acceptable to the Title Company for the Property;

(e) Closing Statement;

(f) **Assignment and Assumption of the Leases; and**

(g) Any other document reasonably required pursuant to the terms of this Agreement.

(2) Purchaser. At Closing, Purchaser shall deliver to Seller the following:

(a) The balance of the Purchase Price payable at the Closing, as adjusted for prorations and taxes and hold-backs, in the manner required under this Agreement;

(b) A Non-foreign buyer affidavit pursuant to pursuant to Section 692.201, Florida Statutes;

(c) **Assignment and Assumption of the Leases**;

(d) Closing Statement;

(e) Instructions from Purchaser directing payment of the Earnest Money Deposit and the Purchase Price and all other amounts due at Closing, or thereafter in accordance with the provisions of this Agreement, to Seller or any other person as Seller shall designate; and

(f) Any other document reasonably required pursuant to the terms of this Agreement.

9. **Costs**. At the time of Closing, Purchaser shall pay to Seller the total Purchase Price for the Property, less prorations and adjustments in accordance with this Agreement. Taxes and governmental assessments for the Property shall be prorated as of the Closing Date, with Purchaser as owner of the Property as of the Closing Date. Cash at Closing shall be increased or decreased as may be required by prorations to be made through the Closing Date. Taxes shall be prorated based on the current year's tax. If Closing occurs at a date when the current year's millage is not fixed and current year's assessment is available, taxes will be prorated based upon such assessment and prior year's millage. If current year's assessment is not available, then taxes will be prorated on prior year's tax. All special taxes or assessments approved or assessed prior to the Closing Date shall be paid by Seller; provided, however, in the event any special assessments are payable in installments Seller shall be responsible for the installments due prior to Closing and Purchaser shall be responsible for the installments due on or after the Closing. A tax proration based on an estimate shall, at request of either party, be readjusted upon receipt of current year's tax bill. This covenant shall survive Closing.

A. Seller shall pay for the following items: (i) the recording fees for the Special Warranty Deed; (ii) Seller's legal fees and expenses; and (iii) any costs of curing title defects. **[Insert broker commission, title policy and title search fees if Seller paying same.**] Seller shall pay one half of any escrow closing fee charged by the Title Company.

B. Purchaser shall pay for the following items: (i) the cost of all inspections, tests and studies undertaken by Purchaser in connection with its investigation; (ii) Purchaser's legal fees and expenses; (iii) any third party professional and consulting fees incurred at Purchaser's request; and (iv) the cost of any Survey undertaken by Purchaser. **[Insert broker commission, title policy and search fees if Purchaser paying same.]** Purchaser shall pay one half of any escrow closing fee charged by the Title Company. Purchaser also **specifically agrees** to pay documentary stamp taxes on the deed to be recorded at closing because Seller, as a dependent special district and body politic and corporate of the State of Florida, is exempt from payment of documentary stamp taxes pursuant to Section 12B-4.002(3) and Section 12B-4.013(5), Florida Administrative Code.

10. **Seller's Delivery of Property Data**. Upon request, Seller shall provide Purchaser with copies of any permits, plans and specifications, engineering and environmental reports, surveys and other documentation related to the physical condition of the Property that Seller has in its care, custody or control and **[copies of all leases, licenses, and occupancy agreements in effect for use or possession of any portion of the Property]** ("**Seller's Documents**"). Purchaser agrees that it shall not disclose to third parties (except for Purchaser's lenders, attorneys and consultants working on the transaction) the results of such reviews, inspections, or tests, as well as the contents of any of the Seller Documents, except as may be necessary to effectuate the Closing of this transaction or upon lawful order of a governmental authority or as otherwise may be required by law.

11. **Duties and Rights of Escrow / Closing Agent**.

A. Purchaser and Seller authorize Escrow Agent or Closing Agent (collectively, "**Agent**"), and Agent agrees by acceptance hereof, to hold all monies paid in escrow and to disburse the same in accordance with the terms and conditions of this Agreement. Agent undertakes to perform only such duties as are expressly set forth in this Agreement and no implied duties or obligations will be read into this Agreement against Agent.

B. Agent may act in reliance on any writing or instrument or signature that it, in good faith, believes to be genuine; may assume the validity and accuracy of any statement contained in such a writing or instrument; and may assume that any person purporting to give any writing, notice or instructions with respect to this Agreement has been duly authorized to do so.

C. In the event of doubt as to its duties or liabilities under the provisions of this Agreement, Agent shall have the right to withhold payment of the monies which are the subject of this escrow until the parties mutually agree to the disbursement thereof, or until a judgment of a court of competent jurisdiction shall determine the rights of the parties thereto, or Agent may deposit all monies then held pursuant to this Agreement, less the reasonable attorneys' fees and costs for the interpleader or similar action, with the Clerk of the Circuit Court of Hardee County, and upon notifying all parties concerned of such action, all liability on the part of Agent shall fully terminate. Purchaser and Seller agree that Agent shall not be liable to any party or person whomsoever for misdelivery to Purchaser or to Seller of money subject to this escrow, unless such misdelivery shall be due to a willful breach of Agent's duties under this Agreement or gross negligence by Agent, and the parties will fully indemnify Agent from any and all expense, cost, claim, or charges it may incur, including its reasonable attorneys' fees and costs, subject to the limitations of s. 768.28, Florida Statutes.

12. **Default and Notice to Cure**.

A. If Purchaser defaults in any of its material obligations to be performed on or prior to the Closing Date, including default in the payment of the Purchase Price, then Seller, as its sole and exclusive remedy, shall have the right to terminate this Agreement by sending written notice to Purchaser, in which event the Earnest Money Deposit shall be paid to Seller as liquidated damages and not as a penalty and neither party hereto

shall have any further obligations hereunder except for those that are expressly provided in this Agreement to survive the termination hereof. It is agreed by the parties that the liquidated damages set forth herein are not a penalty and are agreed upon by the parties because of the difficulty, inconvenience, and uncertainty in determining Seller's actual damages for Purchaser's default; provided, however, that Seller may also bring a claim against Purchaser for damages incurred by Seller that are covered by the indemnities set forth in Section 5 of this Agreement.

B. If Seller defaults in any of its material obligations to be performed on or prior to the Closing Date with respect to the sale of the Property, including its failure to provide the deed for the Property to Purchaser, and Purchaser has performed all its material obligations under this Agreement, then Purchaser, as its sole and exclusive remedy, shall have the right (i) to terminate this Agreement and receive a return of the Earnest Money Deposit, or (ii) to seek specific performance of Seller's obligations hereunder (it being expressly acknowledged that the remedy of specific performance is an appropriate remedy in the event of a default by Seller under this Agreement). Upon such return and delivery of the Earnest Money Deposit, if such remedy is elected by Purchaser, this Agreement shall terminate and neither party hereto shall have any further obligations hereunder except for those that are expressly provided in this Agreement to survive the termination hereof. In no event shall Purchaser have the right to seek or recover any other damages from Seller in the event of Seller's default with respect the sale of the Property.

C. In connection with any litigation arising out of the enforcement or interpretation of this Agreement, the prevailing party shall be entitled to recover from the other, all costs incurred, including reasonable attorneys' fees, including without limitation trial and appellate proceedings, subject to the limitations of Section 768.28, Florida Statutes.

D. The provisions of this Section 12 shall survive the termination hereof.

13. **Condemnation**. If, prior to the Closing Date, any part of the Property is taken by an entity other than Purchaser (other than a temporary taking), or if Seller shall receive an official notice from any governmental authority, having eminent domain power over the Property, of its intention to take by eminent domain proceeding any part of the Property (a "**Taking**"), then Purchaser shall have the option, exercisable within ten (10) days after receipt of notice of such Taking, to terminate this Agreement by delivering written notice thereof to Seller, whereupon Purchaser's deposit shall be returned and this Agreement shall be deemed cancelled and of no further force or effect, and neither party shall have any further rights or liabilities against or to the other except pursuant to the provisions of this Agreement, which are expressly provided to survive the termination hereof. If a Taking shall occur and Purchaser shall not have timely elected to terminate this Agreement, then Purchaser and Seller shall consummate this transaction in accordance with this Agreement, without any abatement of the Purchase Price or any liability or obligation on the part of Seller by reason of such Taking, provided, however, that Seller shall, on the Closing Date, (i) assign and remit to Purchaser, and Purchaser shall be entitled to receive and keep, the net proceeds of any award or other proceeds of such Taking which may have been collected by Seller as a result of such Taking less the reasonable expenses incurred by Seller in connection with such Taking, or (ii) if no award

or other proceeds shall have been collected, deliver to Purchaser an assignment of Seller's right to any such award or other proceeds which may be payable to Seller as a result of such Taking and Purchaser shall reimburse Seller for the reasonable expenses incurred by Seller in connection with such Taking.

14. **Notices**. All notices, demands, or other communications of any type (herein collectively referred to as "**Notices**") given by Seller to Purchaser, or by Purchaser to Seller, whether required by this Agreement or in any way related to the transaction contracted for herein, shall be void and of no effect unless given in accordance with the provisions of this Section 14. All notices shall be in writing and delivered to the person to whom the Notice is directed, either: (i) in person; (ii) by United States Mail, certified with return receipt requested; (iii) delivered by Federal Express or other comparable overnight courier which obtains a receipt to confirm delivery; or (iv) sent by email, telex, or telecopy with confirmed receipt. Notices delivered by mail shall be deemed given three (3) days after deposited in a post office or other depository under the care or custody of the United States Postal Service, enclosed in a wrapper, addressed properly, with proper postage affixed. All notices shall be addressed as follows:

If to Purchaser:

_____
_____
_____
_____

If to Closing or Escrow Agent:

MidSouth Title
123 South 9th Avenue
Wauchula, FL 33873
P: (863) 773-9054
mail@gomst.com

If to Seller:

Hardee County Industrial Development Authority
107 East Main Street
Wauchula, Florida 33873
Telephone: 863-773-3030

with copy to:

_____
_____
_____
_____

Either party may change their address by written notice given to the other as hereinabove provided. Notices given otherwise than by mail shall be deemed given upon actual receipt thereof. The parties agree that counsel for Purchaser and counsel for Seller are authorized to give notice on behalf of their respective clients.

15. **Covenants: Preclosing Rights and Obligations of Seller**. From the Effective Date of this Agreement until the Closing Date, Seller shall: (i) not take any action which will adversely affect title to the Property; (ii) not enter into any lease, license or other agreement for occupancy of the Property, unless Purchaser has previously consented in writing; (iii) not enter into any service contracts which survive the Closing, unless Purchaser has previously consented in writing.

16. **Warranties, Representations and Disclosures of Seller**. Seller makes the following warranties, representations and disclosures to Purchaser, which representations and disclosures shall be true on the Effective Date and shall also be true at the time of Closing and shall survive closing for a period of six (6) months:

A. Authority. Seller is an industrial development authority created pursuant to Part III, Chapter 159, Florida Statutes, and a dependent special district authorized by resolution of the Hardee County Board of County Commissioners, and is duly organized, validly existing, and in good standing under the laws of the State of Florida, and has all requisite power and authority to execute and deliver this Agreement.

B. Condemnation. To the actual knowledge of Seller, Seller has no knowledge of any pending or threatened condemnation or similar proceeding affecting the Property, nor does Seller have any actual knowledge that any such action is presently contemplated.

C. Pending Litigation/Violations. To the actual knowledge of Seller, Seller has no knowledge of any legal actions, suits, code enforcement, regulatory actions, or other legal or administrative proceedings, including bankruptcy proceedings, pending or threatened, against the Property or Seller, and, to the actual knowledge of Seller, Seller is not aware of any facts which might result in any action, suit or other proceeding against the Property or Seller that could result in a lien encumbering the Property or any part thereof.

D. Contracts/Leases. Seller has not entered into any existing, in force contracts for the sale of the Property other than this Agreement. Seller has received no notice of and has no actual knowledge of any rights of first refusal, right of first offer, or options to purchase any of the Property or any other rights or agreements that may delay or prevent this transaction. No person or entity other than Seller is entitled to possession of the Property except for the holders of easement rights as shown on the Title Insurance Commitment or **[lease or occupancy agreement(s) that have been provided to Purchaser].** Other than _____, Seller warrants that there is in effect no contract or agreement relating to occupancy, management, or operation of the Property that would be in effect as of the Closing Date.

E. Mechanic's Liens. Seller has no actual knowledge of labor or materials of any kind furnished to or for the benefit of the Property for which payment in full has not been made or with respect to which a construction lien may be filed against the Property.

F. No Mortgages. To Seller's actual knowledge, there are no mortgages encumbering the Property.

It shall be a condition precedent to Purchaser's obligation to close hereunder that the representations and warranties of Seller set forth in this Agreement will be true in all material respects on the Closing Date. Should Purchaser determine prior to the Closing Date that any representation or warranty set forth herein is inaccurate in a material way, then Purchaser shall promptly provide written notice to Seller of such inaccuracy, and provided that Seller does not otherwise elect or is unable to cure such inaccuracy,

Purchaser, as its sole remedy, shall have the option of either waiving any claim against Seller by virtue of such inaccuracy and proceeding to Closing without any adjustment to the Purchase Price, or Purchaser may terminate this Agreement, by written notice to Seller within ten (10) days following written notice from Seller that Seller cannot or will not cure any inaccuracy, whereupon this Agreement and all rights and obligations of the parties hereunder shall thereupon cease and be deemed null and void. In the event of such a termination by Purchaser pursuant to this section, the Earnest Money Deposit shall be immediately returned to Purchaser and thereafter neither Seller nor Purchaser shall have any continuing obligations under this Agreement.

17. **Warranties and Representations of Purchaser**. Purchaser hereby makes the following warranties and representations to Seller, which warranties and representations shall be true on the Effective Date and shall also be true at the time of Closing and shall survive closing for a period of six (6) months.

A. Purchaser has all requisite power and authority to execute and deliver this Agreement.

B. The execution, delivery and performance of this Agreement and the consummation of the transaction contemplated herein by the Purchaser have been duly authorized and approved by all necessary action. This Agreement, when executed, will constitute the legal, valid and binding obligation of Purchaser, enforceable in accordance with its terms, except as enforceability may be limited by applicable bankruptcy, insolvency, reorganization, moratorium or similar laws and subject to general principles of equity (regardless of whether such enforceability is considered in a proceeding in equity or at law).

It shall be a condition precedent to Seller's obligation to close hereunder that the representations and warranties of Purchaser set forth in this Agreement will be true in all material respects on the Closing Date. Should Seller determine prior to the Closing Date that any representation or warranty set forth herein is inaccurate in a material way, then Seller shall promptly provide written notice to Purchaser of such inaccuracy, and provided that Purchaser does not otherwise elect to cure such inaccuracy, Seller shall have the option of either waiving any claim against Purchaser by virtue of such inaccuracy and proceeding to Closing without any adjustment to the Purchase Price, or Seller may terminate this Agreement, by written notice to Purchaser within ten (10) days following written notice from Purchaser that Purchaser cannot or will not cure any inaccuracy, whereupon this Agreement and all rights and obligations of the parties hereunder shall thereupon cease and be deemed null and void and Purchaser shall be deemed in default.

18. **Purchaser's Conditions Precedent**. The following are conditions precedent to Purchaser's obligations to close this transaction:

A. Title. The Title Company is prepared to issue a title policy in favor of Purchaser showing that Purchaser shall have insurable fee simple title to the Property as of the Closing.

B. Document Delivery. Seller shall have executed and delivered all of the documents required of Seller under this Agreement to Purchaser, including but not limited to an acceptable Special Warranty Deed, sufficient and acceptable to the Closing Agent to address the elimination of standard exceptions for "gap" coverage, construction liens and possession.

C. Performance of Covenants. Seller shall have performed all of its material covenants, agreements and obligations under this Agreement.

D. Truth of Representations and Warranties. All of Seller's representations and warranties set forth in this Agreement shall be true and correct in all material respects though first made as of the date of the Closing.

E. Removal of Personal Property. Seller shall remove all personal property, unless otherwise set forth herein, from the Property.

Purchaser may waive any or all of the preceding conditions precedent. With respect to those conditions precedent of which require the cooperation or subsequent action of Seller, Seller shall undertake such cooperation or action in good faith. If, notwithstanding the parties' commercially reasonably diligent effort, all of the following conditions precedent are not satisfied on or before the Closing Date, Purchaser shall have the right and option to either (i) waive any such unsatisfied condition precedent and close this Agreement in accordance with its terms without any adjustment to the Purchase Price, or (ii) terminate this Agreement on such Closing Date. If Purchaser terminates this Agreement because of the failure to satisfy or waive any such condition precedent all rights and obligations of the parties hereunder to each other shall end and this Agreement shall be of no further force or effect. In the event of such a termination, the Earnest Money Deposit shall be returned to Purchaser.

19. **Seller's Conditions Precedent**. The following are conditions precedent to Seller's obligation to close this Transaction:

A. Delivery of Documents. Purchaser shall have executed and delivered to Seller all of the documents required of Purchaser under this Agreement.

B. Performance of Covenants. Purchaser shall have performed all of its material covenants, agreements and obligations under this Agreement.

C. Payment of Purchase Price. Purchaser shall have delivered to Seller the balance of the Purchase Price and the Escrow Agent shall have delivered to Seller the Earnest Money Deposit.

D. Truth of Representations and Warranties. All of Purchaser's representations and warranties set forth in Section 17 of this Agreement shall be true and correct in all material respects.

Seller may waive any or all of the preceding conditions precedent by execution of a written waiver. With respect to those conditions precedent of which require the

cooperation or subsequent action of Purchaser, Purchaser shall undertake such cooperation or action in good faith. If, notwithstanding the parties' commercially reasonably diligent effort, all of the following conditions precedent are not satisfied on or before the Closing Date, Seller shall have the right and option to either (i) waive any such unsatisfied condition precedent and close this Agreement in accordance with its terms without any adjustment to the Purchase Price, or (ii) terminate this Agreement on such Closing Date. If Seller terminates this Agreement because of the failure to satisfy or waive any such condition precedent all rights and obligations of the parties hereunder to each other shall end and this Agreement shall be of no further force or effect. In the event of such a termination pursuant to this section, the Earnest Money Deposit shall be retained by Seller (or if not previously disbursed, the Earnest Money Deposit shall be immediately disbursed to Seller).

20. **Miscellaneous**.

A. Successors and Assigns. This Agreement shall inure to the benefit of and be binding upon the parties hereto and their respective heirs, executors, representatives, successors and assigns. Purchaser shall not have any right to assign its rights under this Agreement without prior written consent of Seller, in Seller's sole discretion. Any assignment without such written consent shall be void and shall not act to release the assigning party from its obligations hereunder. As used herein, the singular number shall include the plural, the plural the singular, and the use of any gender shall be applicable to all genders.

B. Broker's Commissions. Seller and Purchaser warrant and represent to each other that no broker or other person is expecting or due a fee or commission related to the transaction herein contemplated. Each party shall indemnify the other party against any claim of any broker claiming by, through, or under the indemnifying party. This indemnification clause is not intended nor shall it be construed to waive the Seller's rights and immunities or exceed the limitations provided by s. 768.28, Florida Statutes. This warranty and representation shall survive delivery of the Deed and Closing of this transaction**.**

[Alternative language if Brokers are involved:
Broker's Commissions. Seller and Purchaser warrant and represent to each other that no broker or other person expecting or due a fee or commission related to the transaction herein contemplated was involved in this Agreement except for the following:

Seller's Cooperating Sales Associate / Broker:

_____
_____
_____

Seller shall indemnify the Purchaser against any claim of any broker claiming by, through, or under the Seller that is not set forth above. This warranty and representation shall survive delivery of the Deed and Closing of this transaction.]

C. Entire Agreement. This Agreement, including the Exhibit attached hereto, contains the entire Agreement between Seller and Purchaser and all other

representations, negotiations and agreements, written and oral, including any letters of intent which pre-date the Effective Date hereof, with respect to the Property or any portion thereof, are superseded by this Agreement and are of no force and effect. This Agreement may be amended and modified only by instrument, in writing, executed by all parties hereto.

D. 1031 Exchange. If Seller wishes to enter into a IRC Section 1031 like-kind exchange with respect to the Property ("**Exchange**"), the Purchaser agrees to cooperate, including the execution of documents; provided (1) the Purchaser shall incur no liability or expense related to the Exchange and (2) the Closing shall not be contingent upon, nor extended or delayed by, such Exchange.

E. Radon Gas. Radon is a naturally occurring radioactive gas that, when it has accumulated in a building in sufficient quantities, may present health risks to persons who are exposed to it over time. Levels of radon that exceed federal and state guidelines have been found in buildings in Florida. Additional information regarding radon and radon testing may be obtained from your county health department.

F. Mold. Mold is naturally occurring and may cause health risks or damage to property. This Agreement is not contingent upon testing for the existence of toxic mold unless specifically provided.

G. Risk of Loss. Loss or damage to all improvements shall be at the risk of Seller until Closing. In the event of substantial damage to the Property prior to the Closing Date or any condemnation of the Property, the Purchaser may either close this transaction and accept the Seller's interest in the insurance or condemnation proceeds or terminate this Agreement and be entitled to the return of the deposit monies paid by the Purchaser together with all interest earned thereon. For purposes of this Agreement, substantial damage shall mean damage to at least 10% of the Property.

H. Waiver. No waiver hereunder of any condition or breach shall be deemed to be a continuing waiver or a waiver of any subsequent breach.

I. Severability. In case anyone or more provisions contained in this Agreement shall, for any reason, be held invalid, illegal or unenforceable in any respect, such invalidity, illegality or unenforceability shall not affect any other provision hereof and this Agreement shall be construed as if such invalid, illegal or unenforceable provision had not been contained herein.

J. Florida Contract. This Agreement shall be deemed a Florida contract and construed according to the laws of such state, regardless whether this Agreement is being executed by any of the parties hereto in other states or otherwise. The proper and exclusive venue for any action concerning this Agreement shall be the Circuit Court in and for Hardee County, Florida. Except as may be specifically set forth herein, Seller does not waive sovereign immunity. Seller's liability under and relating to this Agreement, if any, is subject to and limited by Section 768.28, Florida Statutes.

K. Jury Trial Waiver. PURCHASER AND SELLER WAIVE THE RIGHT TO A TRIAL BY JURY IN ANY ACTION OR PROCEEDING BASED UPON, OR RELATED TO, THE SUBJECT MATTER OF THIS AGREEMENT. THIS WAIVER IS KNOWINGLY, INTENTIONALLY, AND VOLUNTARILY MADE BY EACH PARTY AND EACH PARTY EXPRESSLY ACKNOWLEDGES THAT NEITHER THE OTHER PARTY NOR ANY PERSON ACTING ON BEHALF OF THE OTHER PARTY HAS MADE ANY REPRESENTATIONS OF FACT TO INCLUDE THIS WAIVER OF TRIAL BY JURY OR IN ANY WAY TO MODIFY OR NULLIFY ITS EFFECT. EACH PARTY ACKNOWLEDGES TO THE OTHER THAT IT HAS READ AND UNDERSTANDS THE MEANING AND EFFECT OF THIS WAIVER PROVISION.

L. Time for Acceptance. Any offer or counter-offer made hereunder remains open unless the offer or counter-offer is sooner rescinded. Purchaser acknowledges that Seller is dependent special district operating under applicable laws of the State of Florida, including Chapter 159, Florida Statutes, and further acknowledges that official acts by Seller are authorized by a governing body. No contract or agreement, whether in writing or verbal, is binding upon Seller until reviewed and accepted by the Seller's governing body and executed by all parties.

M. PROPERTY TAX DISCLOSURE. PURCHASER SHOULD NOT RELY ON SELLER'S CURRENT PROPERTY TAXES AS THE AMOUNT OF PROPERTY TAXES THAT PURCHASER MAY BE OBLIGATED TO PAY IN THE YEAR SUBSEQUENT TO PURCHASE. A CHANGE IN OWNERSHIP OR PROPERTY IMPROVEMENTS TRIGGERS REASSESSMENTS OF THE PROPERTY THAT COULD RESULT IN HIGHER PROPERTY TAXES. IF YOU HAVE ANY QUESTION CONCERNING VALUATION, CONTACT THE COUNTY PROPERTY APPRAISER'S OFFICE FOR INFORMATION.

N. Descriptive Headings. The descriptive headings of the several articles, sections, and paragraphs contained in this Agreement are inserted for convenience only and shall not control or affect the meaning or construction of any of the provisions hereof.

O. Construction. The parties acknowledge that they have had the opportunity to be represented by counsel in connection with this transaction and that this Agreement shall be interpreted according to its fair construction and shall not be construed more strictly against either party.

[Reminder of Page Intentionally Left Blank]

Purchaser:

***

Sign:_____

Date: _____, 2024

****

Sign:_____

Date: _____, 2024

Seller:

HARDEE COUNTY INDUSTRIAL DEVELOPMENT AUTHORITY

By:_____
W. Lee Mikell, Chair

Date: _____, 2024

ATTEST:

_____

Name: _____

Exhibit A

DEPICTIONS / DESCRIPTION OF REAL PROPERTY
(subject to title work / survey)

Physical Address: ******, Wauchula, Hardee County, Florida
*Approximately ******* acres*

Legal Description:

[END]

AGENDA ITEM NO. 5.2

Item Cover Page

ECONOMIC DEVELOPMENT COUNCIL/INDUSTRIAL DEVELOPMENT AUTHORITY AGENDA ITEM REPORT

DATE:	November 12, 2026
SUBMITTED BY:	Melanie Roberts, Economic Development Council
ITEM TYPE:	Business Agenda - Action Items
AGENDA SECTION:	**AGENDA ITEMS**
SUBJECT:	**Sarah Evers** - Updates to the Industrial Development Authority's Policies and Procedures Manual **ACTION RECOMMENDED** - Motion to approve and adopt the Industrial Development Authority's Policies and Procedures manual.
SUGGESTED ACTION:	

ATTACHMENTS:
DRAFT IDA Policies and Procedures Manual.pdf

DRAFT

Abstract

This procedures manual, inspired by Board Policy and set by the administration, serves as a comprehensive guide detailing the processes and protocols governing the operations of the IDA. It aims to provide clarity, consistency, and compliance with legal and regulatory requirements while promoting accountability, transparency, and effective decision-making. By outlining specific procedures, this manual ensures all operational activities are carried out efficiently and effectively, adhering to established standards and best practices.

Table of Contents

Procedures 3
Budget Procedure 4
Preliminary Budget: 4
Final Budget: 4
Monitoring: 4
Amendments: 4
Financial Procedures 5
Responsibilities: 5
Authorization of Expenses: 5
Check Signing: 5
Internal Funds Transfer: 6
External Funds Transfer: 6
Cash Receipts: 6
Auditing: 7
Credit Card Policy 7
Board and Staff Travel and Reimbursement 9
Public Records Request Procedure 10
Understanding the Legal Framework: 10
Initial Steps upon Receiving a Request: 10
Preliminary Processing and Communication: 10
Processing and Responding 11
Fee Schedule 11
Maintaining Records of the Request 12
Procurement Policy 13
Objective: 13
Definitions: 13
Purchasing Thresholds: 13
Cooperative Purchasing/Piggybacking: 13
Issuing Solicitations: 14
Responses: 14
Evaluation Process: 14
Recommendation and Contract: 15

DRAFT

Bid Protest Procedures: 15
Local Preference Policy: 16
Exceptions to Local Preference Policy: 16
Real Estate Policy 17
Purchase and Sale Agreements 17
Lease Agreements 18
Lease with Option to Purchase Agreements 19
Social Media Policy 20
Purpose 20
Definitions 20
Responsibilities 21
Social Media Usage 21
General Procedures and Maintenance of Authority-Owned Accounts 22
Guidelines for Authorized Users 22
Guidelines and Limitations for All Users 23
Exceptions 23

Procedures

The Procedures Manual serves as a comprehensive collection outlining the systematic steps, protocols, and workflows essential for the effective execution of tasks and operations within the IDA. It is crafted to provide clear, step-by-step guidance for carrying out various functions and processes. This manual serves as a navigational tool, ensuring consistency, efficiency, and quality in our day-to-day activities. Tailored to the unique needs of the IDA, these procedures reflect our commitment to operational excellence. By documenting and standardizing workflows, the Procedures Manual fosters clarity, accountability, and continuous improvement.

DRAFT

Budget Procedure

Preliminary Budget:

- A preliminary budget shall be prepared and presented to the Board two (2) months prior to the fiscal year's beginning.
- This budget shall be posted to the IDA website a minimum of two (2) days prior to the presentation and remain on the website a minimum of 45 days.
- This budget shall be reviewed during a Board meeting, there may be discussion, however no vote of adoption shall be taken on the preliminary budget.

Final Budget:

- The final budget shall be presented to the Board the month prior to the new fiscal year at a Board meeting.
- The budget shall be adopted by a resolution of the Board at the meeting at which the final budget is presented.
- Within 30 days of adoption the budget shall be posted on the IDA website and remain on the website for a minimum of 2 years

Monitoring:

- The Board shall be presented with monthly financial reports on a regular basis.
- Every effort should be made to have the prior month's financial reports presented at each monthly Board meeting.
- The Board shall approve monthly financial reports by motion at the meetings they are presented to the extent the Board is satisfied with the reports.
- Any Board member or their agent may request review or copies of the monthly financial reports of the IDA produced in the ordinary course of business, at any time giving a reasonable time frame for delivery.

Amendments:

- Any budget amendment shall be presented with an explanation.
- All amendments shall be adopted by appropriate motion or resolution as applicable pursuant to Florida State Statute 189.016(6).

DRAFT

Financial Procedures

Responsibilities:

- The CEO:
  - Shall designate a controller who shall be an employee of the IDA.
  - Shall review reconciled accounts on a monthly basis, may also do this in conjunction with the Controller and the Accounting Firm.
  - May be an authorized check signer.
- The Controller shall:
  - Be the custodian of all check stock and maintain their security.
  - Assure all payables are settled in a timely manner.
  - Review initialed and approved expenses from staff members before settling accounts.
  - Write checks and attain appropriate signatures on checks.
  - Not be a signer of checks.
  - Maintain all records of payments and expenses including accounting software.
  - Reconcile accounts on a monthly basis and deliver reconciled statements to the CEO.
- Accounting Firm:
  - Shall maintain oversight of accounting software and review postings, making sure financial accounts are following GAAP and GASB.
  - Shall post adjusting journal entries (if required).
  - May aid in preparing financial reports as needed.
  - Prepare appropriate documentation and coordinate and facilitate information for the annual audit as needed.
- Other Staff:
  - Shall maintain receipts for their work-related expenditures, such as credit cards and travel, and provide to the Controller on a monthly basis.
  - Shall review, initial, and approve expenses in which they maintain oversight.

Authorization of Expenses:

- Expenses with supporting documentation will be reviewed by the appropriate administrative staff before being paid.
  - The Controller shall seek review by the appropriate staff member for each expense. Receipts, invoices, or documentation for each expense shall be initialed by the staff member with oversight of the specific expense.
  - After staff review and initialing, expenses may be paid.
- Recurring expenses, such as utilities, annual fees, and those associated with business operations or contractual obligations on a monthly or regular basis are authorized to be paid after review by as provided herein.

Check Signing:

- The Board of Directors selects authorized check signers.

DRAFT

- Anytime the authorized signers change, the CEO or a designated IDA employee shall communicate this to the bank within three (3) business days and provide any necessary documentation.
- All checks require two (2) signatures.
- At no time shall blank checks be signed for any reason.
- All checks must be fully filled in and a specific payee must be named. No checks shall be made to "Cash".

Internal Funds Transfer:

- The Controller is authorized to make Internal Funds transfers as sanctioned by Board action or Board Policy.
- All internal funds transfers should be initiated by the Controller and be reviewed by the Accounting Firm.

External Funds Transfer:

- Any external funds transfers shall be performed by an authorized check signer.
- External funds transfers may be set up or communicated through the Controller, however the Controller is not authorized to initiate the transfer.
- External transfers may be authorized by Board Resolution and thereby the Board authorization shall be construed as the 2nd signature of the transfer.
- In the event an external transfer is needed, and it was not previously authorized by the Board, adequate documentation with two (2) authorized check signers' signatures should be recorded. (Note: The Bank will only require one authorized transferee therefore the 2 signatures shall be an internal document.)

Short-Term Loans Between Budget Accounts:

- Pursuant to Resolution 25-14, as such resolution may be amended by action of the Board, the Chief Executive Officer and one member of the Board shall have the authority to initiate and execute short-term loans between budget accounts, provided that the following conditions are met:
    - A single transfer shall not exceed One Million and 00/100 Dollars ($1,000,000.00);
    - The transfer shall be for working capital purposes; and
    - The source of reimbursement shall be reasonably identifiable.
- As provided in Resolution 25-14, the Authorization Form shall be completed and executed by the Chief Executive Officer and one member of the Board in order to carry out the provisions of this section.

Cash Receipts:

- Any cash receipts should be recorded, documented, and signed by 2 staff members.
- Appropriate documentation, including the signature of payee and amount received, should be recorded for any cash receipts.
- All cash receipts should be deposited into the appropriate account within 3 business days of collection.

DRAFT

Auditing:

- An annual audit shall be conducted by a firm selected by the Board of Directors.

Credit Card Policy

- Purpose – to establish credit card policies which meet the following criteria:
    - Provide an efficient and cost-effective method of purchasing and paying for goods and services.
    - Eliminate the use of check requests and purchase orders where practicable.
    - Ensure credit card purchases are in accordance with Authority policies and procedures and Florida Statutes.
    - Provide for disciplinary action if the credit cards are misused.
- Scope
    - The Hardee County Industrial Development Authority will issue credit cards to certain employees as determined by and at the discretion of the Chief Executive Officer; this policy sets out the acceptable and unacceptable uses of such credit cards.
    - The Chief Executive Officer, in coordination with the Authority's finance staff and subject to the oversight of the Board of Directors, has the authority to revoke credit cards and impute any payroll deductions for charges that are not acceptable as noted throughout this policy.
    - Credit cards shall have a credit limit as set by the financial institution providing the credit card. The Chief Executive Officer shall have the authority to set an alternative credit limit provided that the limit does not exceed the limit set by the financial institution.
- Issue of Credit Cards – IDA credit cards will only be issued in line with this policy. They will only be issued where the user has:
    - Obtained approval of the Chief Executive Officer.
    - Signed a confirmation of having read, understood, and accepted the credit card policy and the terms and conditions under which the credit card is issued and operated.
- Terms and Conditions of Use – No IDA credit cards will be issued or can be used except in accordance with this policy. The use of an IDA credit card is governed by the following terms and conditions. The cardholder/user is responsible for:
    - The proper use of the credit card in line with this policy.
    - The safe custody of the card information. Reasonable precautions should be taken to prevent fraudulent use of the card.
    - Informing the vendor of tax-exempt status prior to processing the sales transaction.
    - Collecting and saving detailed sales receipts.
    - Writing the account number, or a narrative description of the account/project to be charged, on each receipt.
    - Receiving and inspecting all ordered materials and services.
    - Identifying and handling discrepancies and disputed charges.

DRAFT

    - Submitting receipts to the staff member overseeing card transactions as soon as possible, and no later than five (5) days from receipt of the credit card statement.
    - Complying with Authority policies and procedures.
- Prohibited Purchases
    - The Authority credit card is to be used for Authority-authorized purchases only. Before a purchase is made, the employee should verify that funds are available in the appropriate budget to cover the expense.
    - If any employee uses the Authority credit card for personal purchases in violation of this policy, the cost of such purchase(s) will be considered an advance of future wages payable to that employee and will be recovered in full from the employee's next paycheck and such other disciplinary action as deemed necessary by the Chief Executive Officer.
- Sales Tax
    - The Authority is exempt from paying Florida state sales and/or use tax, even if the purchase is made with a credit card. It is the responsibility of the cardholder/user to make the vendor aware that the sales transaction is tax exempt prior to processing the sale. If the vendor charges sales tax, contact the vendor and obtain a credit equal to the amount of the sales tax.
- Documentation
    - For all transactions, the cardholder/user must retain the customer's copy of the summary charge slip, along with the detail receipt that identifies every item purchased and the corresponding item cost. The cardholder/user must also write the account number and a brief explanation on the back of the receipt. Each expense should have the same type of documentation that would be included on a request for reimbursement.
    - Where proper receipts are not made available, the assigned cardholder/user will make every effort to contact the vendor and obtain a duplicate receipt. If unavailable, proper documentation will be required explaining why there is no receipt, along with the proper details related to the transaction (i.e., date, time, purchase(s) made, amounts, account number, project, etc.).
    - If a cardholder/user continues to submit transactions without receipts, it will result in disciplinary action, up to and possibly including termination of employment. In addition, the credit card holder may be required to reimburse the Authority by deduction of the employee's next paycheck, and credit card privileges may be revoked.
- Revocation of Credit Card
    - Credit card privileges may be revoked upon the cardholder's/user's failure to follow Authority policy and procedures as defined in this policy. The Chief Executive Officer will coordinate the revocation of credit cards.
- Violations – the following acts are prohibited:
    - Personal use of an Authority credit card
    - Cash advances on a credit card
    - Purchase of items specifically prohibited by this policy
    - Not reporting lost or stolen cards

DRAFT

- Inadequate record keeping and/or documentation of purchases
- Paying sales tax without appropriate documentation
- Failure to comply with this policy may result in revocation of credit card privileges and other disciplinary action, up to and including termination, as appropriate and in accordance with the Authority's personnel policies.

Board and Staff Travel and Reimbursement

- Board members and members of Staff are authorized to make expenditures and seek reimbursement pursuant to the following:
  - The IDA is authorized to pay by advancement or reimbursement, or a combination thereof, the costs to Board members and Staff for providing, arranging, and making expenditures for transportation, lodging, meals, and other reasonable and necessary items and services in connection with the performance of promotion and other duties of the IDA.
  - The IDA is authorized to pay by advancement or reimbursement, or a combination thereof, the costs of per diem of Board members or Staff, or other authorized persons, for foreign travel at the current rates as specified in the federal publication "Standardized Regulations (Government Civilians, Foreign Areas)," and incidental expenses as provided in Florida Statute 112.061, for the purpose of promoting economic or industrial development of Hardee County.
  - The IDA is authorized to pay by advancement or reimbursement, or a combination thereof, the actual reasonable and necessary costs of meals, lodging, and incidental expenses of Board members and Staff, or other authorized persons, when meeting with a business prospect of the state, purchaser of Florida exports, or foreign governmental dignitaries. Actual cost of transportation is a reimbursable expense as applicable.
  - Board and Staff travel and reimbursement shall adhere to the provisions of Florida Statute 159.47 (2024).

DRAFT

Public Records Request Procedure

Understanding the Legal Framework:

Florida's public records laws, encapsulated in Chapter 119 of Florida Statutes, ensure broad public access to records of state, county, and municipal agencies. Key principles include:

- All public records are open for inspection and copying by any person, unless specifically exempted by law.
- Agencies must provide access to electronic records and ensure that confidential or exempt records are protected from unauthorized disclosure.
- Florida Statute 119 and 288.07 outline certain exemptions from public disclosure.

Initial Steps upon Receiving a Request:

- **Log the Request:**
  - Record the date of receipt, the requester's identification, contact information, and a description of the requested documents. The "Public Records Log" will be located in the Public Records electronic folder. (See "Documentation" below)
- **Clarification:**
  - If a request was not made in writing, contact requester in writing to clarify scope of the request. To the extent possible, ask requester to clarify scope of the request in writing. If requester refuses or is unable to clarify scope of the request in writing, the staff member taking the request shall draft a summary of the discussion and understanding of the scope of the request in writing for the Public Records Log.
- **Acknowledge Receipt:**
  - Send a written acknowledgment to the requester within two business days of receipt. There is a letter template in the "Public Records" electronic folder.
- **Communicate the request to Administrative Staff:**
  - It is imperative the CEO and designated staff are made aware of a public records request.
  - Upon receipt of a request, the records custodian shall communicate receipt of the request to the CEO and additional designated staff members.

Preliminary Processing and Communication:

- **Identify the Scope and Responsive Records:**
  - Determine the location and format of the requested records. This includes identifying if the records are held in paper or electronic form.
- **Identify Who should be Involved:**
  - Although there is a single public records custodian, a request may require more individuals in order to produce all responsive records; such as, professional services like a CPA or other staff.
- **Confidential Records:**
  - Clearly inform requesters of any records that are confidential or exempt, citing the specific statutes (e.g., F.S. § 119.07, F.S. § 288.075)

DRAFT

- **Estimate Fees:**
  - Using the fee schedule below estimate the cost, if any, to produce the records.
- **Notify the Requester of Fees:**
  - Provide the requester with the estimate of fees before any production work is undertaken.
  - Receive a written confirmation from the requester that all estimated fees are accepted and will be paid.
- **Collection of Fees:**
  - Collect the applicable fees if the requester agrees.
  - If the requester does not approve the fees the request is considered VOID and written communication should be provided to the requester stating such.
  - Documents that are easily retrievable, such as meeting minutes and program information sheets, should be provided promptly without additional labor charges.

Processing and Responding

- **Complete the collection of all responsive records:**
  - Gather all responsive records in the format requested.
- **Check for Exemptions:**
  - Review the requested records for any information that is exempt from public disclosure under Florida law. Common exemptions include personal identifying information, certain investigative records, and proprietary business information (Florida Statutes Chapter 119 and 288.075).
- **Redact Exempt Information:**
  - If any part of the record is exempt, redact the exempt portions and provide the remainder of the document.
  - In the event a requested record pertains to a business, the records custodian shall send that business a copy of the records request along with copies of the records to be produced. Such business shall have five (5) business days to redact information and provide the IDA with redacted copies of the records to be produced, provided that such redactions must be in compliance with Florida Statutes Chapter 119 and 288.075.
- **Consult Legal Counsel:**
  - If there is any uncertainty about the applicability of exemptions, consult with legal counsel.
- **Provide the Records:**
  - Make the records available for inspection or provide copies in the requested format. If the records are in electronic form, ensure they are provided in a common, accessible format.

Fee Schedule

Fees may be charged for extensive use of information technology resources, clerical assistance, or when records are provided in a non-routine format. There is no charge for requests that take less than 15 minutes to fulfil. Florida Statute 119.07 shall govern and supersede this fee schedule.

- **Copies:**
  - 15 cents per single-sided page

    - 20 cents per double-sided page for standard-sized documents.
    - Certified copies shall be charged $1 per sheet.
- **Labor Charges:**
    - For requests requiring more than 15 minutes, impose a charge based on the employee's pay rate multiplied by the time spent.
    - Charges for clerical, supervisory, or other personnel labor or resources will be no greater than the hourly rate, including benefits, of the lowest paid personnel capable of providing such services.
    - In those cases where a legal, accounting, or other professional review is necessary, the charge will be at the lowest rate charged by the professional to the IDA.
- **Multi-Media and Information Systems (Technology):**
    - Charge the actual cost for reproductions and extensive use of information technology resources.
- **Special Publications**:
    - Books and other multi-page materials which require outside reproduction, such as studies and audits, shall be charged the actual cost of the reproduction.

Maintaining Records of the Request

- **Documentation:**
    - Keep detailed records of the entire process, including the request, communications with the requester, the review process, any consultations with legal counsel, and the final response. This is in addition to the log which should be kept for each request.
        - For each new request a new electronic folder should be created. A copy of all communications and a list of all responsive items should be placed in the electronic folder. In the event a responsive item is tangible and cannot be electronically duplicated then a description should be noted in the file.
        - The “log” file should be stored in the same folder as the individual requests’ files. The log should be used as a record as well as an index to the electronic files.
        - **File Names:** For searchability purposes, files should be named the same or similar to the description corresponding to the request in the log as well as dated.
- **Retention:**
    - Maintain these records in the office’s electronic share file to ensure compliance with Florida’s public records retention requirements.

DRAFT

Procurement Policy

Objective:

The purpose of this policy is to establish the procedures for issuing requests and solicitations by the IDA. It ensures compliance with Florida Statutes, promotes fair competition, and secures the best value for public funds.

Definitions:

- **Invitation to Bid (ITB):** The solicitation for competitive sealed bids for goods and/or services for which the scope of work, specifications or contractual terms and conditions can be reasonable and closely defined.
- **Request for Information (RFI):** A written or electronically posted request made by the IDA to vendors for information concerning commodities or contractual services. Responses to these requests are not offers and may not be accepted by the IDA to form a binding contract.
- **Request for Proposals (RFP)**: A written or electronically posted solicitation for competitive sealed proposals.
- **Request for Qualifications (RFQ)**: Used to obtain statements of qualification for potential development teams or consultants.
- **Request for Quote (RQ)**: An oral, electronic, or written request for written pricing or services information from a vendor for commodities or contractual services available from that vendor.
- **Sole Source**: The only existing source of the only item that meets the needs of the user department/division as determined by a reasonably thorough analysis of the marketplace.

Purchasing Thresholds:

- **Up to $5,000:** Except as may otherwise be required by Florida law, IDA staff shall have the discretion to purchase goods and services up to $5,000 in the best interest of the IDA.
- **$5,000.01-$10,000:** Except as may otherwise be required by Florida law, IDA staff has the authority to purchase goods and services between $5,000.01 and $10,000 by obtaining and documenting at least two verbal quotes, if available.
- **$10,000.01-$50,000:** Except as may otherwise be required by Florida law, IDA staff has the authority to purchase goods and services between $10,000.01 and $50,000 by obtaining and documenting at least three written quotes, if available.
- **Over $50,000:** Purchases of goods and services over $50,000 shall be accomplished by competitive solicitation and public advertising approved by the Board of Directors.

Cooperative Purchasing/Piggybacking:

- Definition – Piggybacking is a form of intergovernmental cooperative procurement in which a public purchaser requests competitive sealed bids or proposals, awards and enters a contract, and arranges as part of the contract for other public entities to purchase from the selected vendor under the contracted terms and conditions.

DRAFT

- Procedures – The following procedures apply when piggybacking:
    - The vendor must agree to extend the same terms and conditions of the contract to the IDA in writing to allow the IDA to piggyback on the bid, proposal or contract. The IDA may opt to utilize the bid, proposal or contract if in its best interests. Purchases cannot be made against a contract that has expired.
    - The IDA must obtain the following documentation from the agency that issued the invitation to bid, request for proposals, or other solicitation:
        - A complete copy of the solicitation.
        - A complete copy of the awarded vendor's response to the solicitation.
        - A copy of the award letter/memo/agenda item to the awarded vendor; and
        - The contract if any, between the agency and the vendor, including all exhibits, attachments, addenda, and amendments.
    - IDA staff must document, in writing, that the goods or services needed are within the scope of the original solicitation and contract, that the scope meets the IDA's needs, and that the pricing and terms are fair and reasonable.
    - Any purchase order issued shall reference the awarding agency's invitation to bid, request for proposals or other solicitation and contract number.
    - The purchase of goods or services will not need to be approved by the Board if no contract is needed between the IDA and the vendor. If a contract between the IDA and the vendor is needed, a contract must be prepared and approved. Refer to the Purchasing Thresholds above for purchasing authority.

Issuing Solicitations:

- **Preparation**: Legal counsel and staff prepare the solicitation document, including scope of work, evaluation criteria, and submission requirements.
- **Approval**: All RFIs, RFPs, RFQs, and RQs must be approved by the Board of Directors.
- **Advertisement**: Solicitations shall be publicly advertised.

Responses:

- Responses must include any and all amendments made to the solicitation.
- All responses must be received by the deadline as stated in the solicitation.

Evaluation Process:

- **Evaluation Committee**: The Board shall appoint the evaluation committee, qualified individuals include past Board members, staff and subject matter experts.
- **Criteria**: Evaluation criteria shall be outlined in the solicitation document and may include qualifications, price, technical capability, past performance, compliance with requirements, and other criteria as applicable.
- **Meeting**: A minimum of one selection meeting shall be held by the evaluation committee. Meetings shall be open to the public except as provided in F.S. § 286.0113.
- **Scoring**: Proposals and qualifications are objectively scored based on pre-defined criteria within the solicitation documents, with recommendations documented in writing.

DRAFT

Recommendation and Contract:

- **Solicitation:** Upon approving issuance of the solicitation documents, the Board may choose one of the following options: (1) the Board may authorize the evaluation committee to select the most qualified respondent and move forward with contract negotiations, or (2) the Board may authorize the evaluation committee to provide recommendations to be presented at a subsequent Board meeting. Both options shall be available to the Board for each solicitation.
- **Authorization to Negotiate:** If the Board authorizes the evaluation committee to select the most qualified respondent and move forward with contract negotiations, the evaluation committee may select the most qualified respondent and negotiate a contract pursuant to the time frames outlined in the solicitation documents. The evaluation committee may then present the negotiated contract at a subsequent Board meeting for final approval by the Board.
- **Recommendation:** If the Board authorizes the evaluation committee to provide recommendations to be presented, the evaluation committee shall provide ranked recommendations and present those recommendations to the Board. The Board may approve or deny recommendations and approve to move forward with contract negotiations.
- **Selection:** The Board may approve or deny recommendations and approve to move forward with contract award or negotiations, depending on the type of request.
- **Notice of Intent to Award:** The Board or designated IDA staff, as applicable, shall inform the selected vendor of the IDA's intent to move forward with contract negotiations.
- **Notice to Respondents**: All respondents not selected shall receive notice of intent to award, by preferred means of communication as listed in their proposal.
- **Negotiation**: The agency reserves the right to negotiate terms with the selected vendor(s) to achieve the best value.

Bid Protest Procedures:

- **Bid Protest**: Respondents who wish to submit a protest must file such protest with IDA staff within 5 calendar days of the IDA's notice of intent to award, such protester shall include a bond equal to 1% of the contract value.
- **Resolution**: Designated IDA staff shall attempt to settle or resolve protests, with or without a meeting or hearing, at the discretion of staff. Designated IDA staff shall render a written decision on the protest within 15 calendar days following receipt of the protest.
- **Appeal**: The written decision of IDA staff may be appealed to the IDA Board of Directors by filing a written appeal with the Board within 5 calendar days following receipt of staff's written decision. A timely filed appeal may be heard at the next available Board meeting in which the appellant and staff shall each be given 10 minutes to present the appeal and response. The Board may approve or deny the appeal, and such decision of the Board shall be final.
- **Finality**: There is a compelling interest in procuring goods and services in a timely manner so as to provide residents and businesses with efficient and cost-effective operations. Consequently, procurement disputes must be resolved with minimal delays. Therefore, the procedure set forth herein is the sole means by which a respondent aggrieved by the

DRAFT

solicitation may seek recourse. Refusal or failure by the respondent to seek the recourse provided herein shall constitute a waiver of its right to pursue any further remedies or appeals, either administratively or judicially.

Local Preference Policy:

- **Definition of Local Business**: A business that: (i) conducts operations within Hardee County, (ii) maintains physical business location within Hardee County, and (iii) has conducted business on a daily basis from the local location for at least twelve (12) consecutive months prior to the due date for the application or proposal.
- **Preference Direct Application**: For bids within 5% of the lowest bid, the local business may be awarded the contract.
- **Preference Scoring Criteria**: When direct application is not applied the local business shall receive an extra 5 points on the scoring criteria. Staff and legal counsel reserve the right to modify the scoring criteria and local preference scoring criteria before solicitation is advertised based on individual circumstances of each solicitation.

Exceptions to Local Preference Policy:

- **The Local Preference Policy does not apply to:**
  - Goods or services under cooperative, state, federal, or interlocal agreements.
  - Purchases funded, wholly or partially, by federal, state, or other grant funds where such funding prohibits local preference.
  - Emergency or sole source purchases.
  - Professional services subject to Florida Statute §287.055, the Consultant's Competitive Negotiation Act.
  - Federal funding projects where local preference is not permitted by federal law.
- **Board Discretion:**
  - Application of the local preference policy may be waived upon recommendation by the evaluation committee.
  - Local preference policy does not prohibit the right of the Board or evaluation committee to compare qualifications, character, and fitness of all persons, firms or corporations submitting bids or proposals and to procure goods and services based upon the best interest of the Board and stewardship of funds and projects.
- Other Prohibitions: The local preference policy established herein does not prohibit the IDA from granting any other preference permitted by law, in addition to the preference authorized herein.

References

- Florida Statute § 287.057

DRAFT

Real Estate Policy

Purchase and Sale Agreements

- **Sale of Property:** In all instances where the IDA proposes to sell, transfer, or convey some or all of a parcel or parcels owned by the IDA, a resolution shall be proposed, considered, and approved by the Board of Directors with all of the following being part of the resolution:
    - The address, legal description, or physical description of the property with an appropriate amount of detail to be able to identify the property;
    - The name of the grantee individual or entity;
    - The purchase price;
    - Authorization for the Chair or Vice Chair to sign the contract, deed, and all other documents to effectuate the conveyance; and
    - Authorization for IDA staff to execute and perform ministerial functions in relation to the sale, transfer, or conveyance.
- **Purchase of Property:** In all instances where the IDA proposes to purchase or acquire some or all of a parcel or parcels, a resolution shall be proposed, considered, and approved by the Board of Directors with all of the following being part of the resolution:
    - The address, legal description, or physical description of the property with an appropriate amount of detail to be able to identify the property;
    - The name of the grantee individual or entity;
    - The purchase price;
    - Authorization for the Chair or Vice Chair to sign the contract, deed, and all other documents to effectuate the acquisition; and
    - Authorization for IDA staff to execute and perform ministerial functions in relation to the purchase or acquisition.
- To the extent practicable, the IDA's form Purchase and Sale Agreement should be used for the purchase and sale of IDA property.
- The CEO may designate a member of the IDA staff to maintain responsibility for carrying out the purchase and sale agreement through to closing. Such designated staff member may have the following responsibilities, as applicable pursuant to the terms of the purchase and sale agreement:
    - Choosing and coordinating a title and closing agent;
    - Coordinating surveyors, engineers, and other professionals for the purposes of due diligence;
    - Providing access to the property for site visits and reviews;
    - Assuring adherence to timelines and deadlines of the agreement;
    - Reviewing closing documents in coordination with legal counsel; and
    - Other functions as may be required.
- There shall be no amendments to material terms of the executed contract without prior Board approval; provided, however, that the CEO may extend dates and deadlines within the contract provided that the following criteria are met:
    - The deadline or date of the time period sought to be extended will expire before the next IDA Board meeting;
    - The deadline or date is only extended up to the date of the next IDA Board meeting;
    - The Board ratifies the temporary extension contemporaneous with any additional extensions of time offered at the IDA Board meeting.

DRAFT

- **Closing Procedure:** The closing for any and all transactions for the purchase or sale of IDA property shall be conducted as follows:
    - The designated IDA staff member responsible for administration of the transaction shall review all closing documents in coordination with legal counsel.
    - Once all closing documents are approved, the designated IDA staff member shall coordinate with the Chair or Vice Chair to arrange a time to sign all documents. If the IDA is sell, transferring, or conveying property, such conveyance documents shall be held in escrow until closing funds have been received and confirmed by the closing agent. Once funds have been confirmed, the designated IDA staff member shall transmit executed closing documents to the closing agent for recording.
- **Wire Transfers:** In all instances that involve a wire transfer of funds, the following procedures shall be followed:
    - If the IDA is sending funds via wire transfer, the Chief Financial Officer for the IDA shall request and receive the wire instructions. The CFO shall verbally confirm the wire instructions using an independently-verified phone number for the recipient. Once verbally confirmed, the CFO must verify in writing that the wire instructions have been confirmed before funds may be authorized.
    - If the IDA is receiving funds via wire transfer, the CFO for the IDA shall send the wire instructions by email and, in a separate email, provide contact information for verification of instructions. The IDA's wire information must be verbally confirmed by the CFO.

Lease Agreements

- In all instances where the IDA proposes to lease some or all of a parcel or parcels or some or all of a building, structure, or other personal property owned by the IDA, a resolution shall be proposed, considered, and approved by the Board of Directors with all of the following being part of the resolution:
    - The address, legal description, or physical description of the property with an appropriate amount of detail to be able to identify the property;
    - The name of the lessee individual or entity;
    - The lease price;
    - The term of the lease;
    - Authorization for the Chair or Vice Chair to sign the lease and all other documents to effectuate the lease; and
    - Authorization for IDA staff to execute and perform ministerial functions in relation to the lease and administration of the lease.
- To the extent practicable, the IDA's form Lease Agreement should be used for the lease of IDA property.
- There shall be no amendments to material terms of the executed lease without prior Board approval; provided, however, that the CEO may extend dates and deadlines within the contract provided that the following criteria are met:
    - The deadline or date of the time period sought to be extended will expire before the next IDA Board meeting;
    - The deadline or date is only extended up to the date of the next IDA Board meeting;
    - The Board ratifies the temporary extension contemporaneous with any additional extensions of time offered at the IDA Board meeting.

DRAFT

Lease with Option to Purchase Agreements

- To the extent practicable, the IDA's form Lease with Option to Purchase Agreement should be used for the lease and sale of IDA property.
- In all instances where the IDA proposed to lease some or all of a parcel or parcels or some or all of a building, structure, or other personal property owned by the IDA, a resolution shall be proposed, considered, and approved by the Board of Directors with all of the following being part of the resolution:
    - The address, legal description, or physical description of the property with an appropriate amount of detail to be able to identify the property;
    - The name of the lessee individual or entity;
    - The lease price;
    - The term of the lease;
    - Authorization for the Chair or Vice Chair to sign the lease and all other documents to effectuate the lease; and
    - Authorization for the IDA staff to execute and perform ministerial functions in relation to the lease and administration of the lease.
- If the lessee chooses to exercise its option to purchase, the purchase and sale agreement shall be approved by separate resolution at the next IDA Board meeting and in accordance with the policies relating to Purchase and Sale Agreements above.
- There shall be no amendments to material terms of the executed contract without prior Board approval; provided, however, that the CEO may extend dates and deadlines within the contract provided that the following criteria are met:
    - The deadline or date of the time period sought to be extended will expire before the next IDA Board meeting;
    - The deadline or date is only extended up to the date of the next IDA Board meeting;
    - The Board ratifies the temporary extension contemporaneous with any additional extensions of time offered at the IDA Board meeting.

DRAFT

Social Media Policy

Purpose

- Through this policy, the Hardee County Industrial Development Authority establishes basic guidelines for the use of its current (and any future) social media outlets to ensure proper and consistent use.
- Social media forums provide an interactive means of sharing information related to the Authority's economic development mission, programs, and activities. They provide an easy-to-use means of engaging businesses, residents, and the public.
- Social media can be especially effective in communicating information in time-sensitive situations when the timeliness of information is important.
- The goals of the Hardee County Industrial Development Authority Social Media Policy are:
    - To increase public awareness of the Authority's programs, projects, policies, and services
    - To promote the value and importance of the Authority's economic development mission among elected and appointed officials, business and civic leaders, residents, and the public
    - To maintain open, professional, and responsive communications with members of the public and the news media
- This policy, and its provisions, apply to and serve as a guide to all Authority employees, Board members, and contracted entities that share information on behalf of the Authority while engaging in any social media activities implied or directed.
- All social media communications, messages, and comments are subject to Florida's public records law. All of the Authority's social media sites shall comply with Chapter 119 and any other applicable sections of the Florida Statutes. The Authority will use a third-party service provider, where practicable, to capture and retain social media interaction on Authority-owned social media accounts.

Definitions

- **Authorized User** is an employee who has been authorized by the Executive Director to access and post updates to the Authority's social media accounts.
- **Comments** are short notes about a post.
- **Hashtags (#)** are words or phrases used within a message to identify a keyword or topic of interest and facilitate a search for it. Hashtags are preceded by the pound sign (#) and can be a word or a short phrase (e.g., #HardeeCountyIDA).
- A **Post** is a message the Authority wants to share with those who “like” the Authority's Facebook page or who “follow” the Authority on other platforms. Posts will appear on the Authority's activity feed and can include pictures, links, videos, or other related media.
- **Social Media** are websites and applications that enable users to create and share content or to participate in social networking.
- A **Social Media Account** is any registration, login credential, or network that is created or maintained for the purpose of establishing or perpetuating a social media presence.

DRAFT

- **Social Networking** is the use of dedicated websites and applications to interact with other users, or to find people with similar interests to oneself or interest in the Authority.
- **Tag** or **Tagging** someone or an organization means a link is created to that person's or organization's profile. The person/organization that is tagged in a post will be notified, and the post may be added to the person's/organization's timeline or newsfeed.

Responsibilities

- The Communications Coordinator or designee is ultimately responsible for the maintenance and monitoring of all Authority social media accounts in accordance with this policy. The Communications Coordinator is the primary point of contact and will provide an overview and training on this social media policy and its implementation.
- The Records Custodian, with support from the Communications Coordinator's office, will oversee the records management program for social media content.
- The Authority's information technology support staff or contracted provider will provide the necessary technology services, security, guidance, and technical assistance for effective social media usage.
- Authorized users are responsible for engaging in social media by posting pertinent information on behalf of the Authority on a consistent basis and in compliance with this social media policy.

Social Media Usage

- The Hardee County Industrial Development Authority reserves the right, in its sole discretion, to prohibit commenting on posts on all social media platforms. The Authority utilizes its social media sites as a platform for informational purposes, similar to a local bulletin board. As such, it is the policy of the Authority to turn off commenting on all social media posts originating from the Authority such that the social media platforms can act as an informative medium for Authority information.
- While social media provide an effective forum for building relationships and for conveying small "bites" of information, these platforms do not serve as the Authority's sole or primary means of communication with residents, businesses, and others. The Authority's social media accounts are intended to be used for informational purposes only.
- Social media is a particularly ineffective tool for communicating about complex issues. The Authority will use more appropriate means to communicate detailed information about complex issues and to discuss concerns with businesses, residents, and others.
- Practical and legal considerations may sometimes constrain, prevent, or prohibit discussion of certain topics, such as pending contracts or legal matters, through this medium.
- Users shall be informed that by posting to the Authority's social media sites, the Authority relinquishes any and all responsibility and liability for any materials the Authority deems inappropriate for posting, which cannot be removed in an expeditious and otherwise timely manner.
- These guidelines must be readily available to users by hyperlink from the Authority's website.

DRAFT

General Procedures and Maintenance of Authority-Owned Accounts

- The Authority will utilize one central account per desired social media network (e.g., Facebook, LinkedIn, and others). Individual staff, through the Communications Coordinator or designee, will utilize the central account to convey desired communication.
- The Authority may, from time to time, contract with third party media and multimedia company who may, at the discretion of the Authority, have rights as authorized users to the Authority's social media accounts.
- An introductory statement that clearly specifies the purpose and topical scope of the Authority's social media presence will be included on all platforms used.
- Management of social media accounts and initiatives shall lie primarily within the Communications Coordinator.
- A limited number of staff members shall have access to social media accounts and passwords and permission to post as the "Hardee County Industrial Development Authority." Approved staff must complete an Authorized User Form and receive approval from the CEO. Staff members who are not Authorized Users may request that the Communications Coordinator or designee post a message on their behalf.
- The Communications Coordinator or designee will provide training on social media usage for authorized users.
- The Authority shall not post purposefully inaccurate information. If an inadvertent inaccuracy is posted, a correction will be published as soon as possible.
- Designated Authority staff may post comments/replies without advance review or permission of Authority management. However, if staff have concerns or desire advance review, they may request such review from the Communications Coordinator or designee.
- Any content removed based on this guideline will be retained, including the time, date, and identity of the poster when available, in accordance with public records laws.

Guidelines for Authorized Users

- Social media posts made by the Authority must pertain to Authority news, economic development activities, or Authority-sponsored/partnered events only.
- As part of the interactive approach to using social media, the Communications Coordinator or designee may follow, message, like, share, and repost content that is relevant to the Authority's mission.
- The Authority's authorized users will approach the use of social media tools as consistently as possible.
- At all times, authorized users shall use good judgment when posting. Employees must refrain from posts that may be interpreted as offensive, obscene, demeaning, or inflammatory. Confidential information shall not be posted.
- In general, individual complaints, concerns, or service requests will not be addressed via social media.
- A standard reply may be used to direct users with concerns related to sensitive or complex issues. This standard reply shall read something like: "The Hardee County Industrial Development Authority is very interested in the insights and concerns expressed here. However, complex topics typically are not effectively discussed in forums such as this. If

DRAFT

you wish to voice your concerns further or obtain additional information, please contact the Authority office at [insert phone number] or visit [insert website]."

Guidelines and Limitations for All Users

- All Authority employees, including authorized users of the Authority's social media accounts, and Board members shall govern themselves in a professional manner that reflects positively on the Authority when using social media. Users should always focus on providing high-quality service and worthwhile information in a timely manner.
- The conversation shall always remain civil and respectful, and all authorized users, employees, and Board members must refrain from using content in violation of this policy.
- Inaccurate information posted by non-employees may be addressed and corrected or removed, on a factual basis only.
- Repeated violations of this policy shall result in removal of access to the service and may be grounds for disciplinary action for Authority employees.
- This Social Media Policy shall be revised as needed. Posts/comments to the Authority's social media accounts shall constitute acceptance of this policy.

Exceptions

This policy may be revised from time to time by action of the Board of Directors.

DRAFT

AGENDA ITEM NO. 5.3

Item Cover Page

ECONOMIC DEVELOPMENT COUNCIL/INDUSTRIAL DEVELOPMENT AUTHORITY AGENDA ITEM REPORT

DATE:	November 12, 2026
SUBMITTED BY:	TheDevelopmentGroup Office, Economic Development Council
ITEM TYPE:	Business Agenda - Action Items
AGENDA SECTION:	**AGENDA ITEMS**
SUBJECT:	**Krystin Chapman** - Land Lease Agreement **ACTION RECOMMENDED** - Motion to approve the Land Lease Agreement between the Hardee County Industrial Development Authority and Troublesome Creek Cattle Company Inc. as presented or in substantially similar form, and authorize Chair or Vice Chair to sign.
SUGGESTED ACTION:	

ATTACHMENTS:
Troublesome Creek Land Lease Final.pdf

LEASE AGREEMENT

BY AND BETWEEN

HARDEE COUNTY INDUSTRIAL DEVELOPMENT AUTHORITY,
a dependent special district and body politic and corporate of the State of Florida

AS LANDLORD

AND

TROUBLESOME CREEK CATTLE COMPANY, INC.,
a Florida for-profit corporation

AS TENANT

DATED _____, 2026

TABLE OF CONTENTS

1. DEMISE 1
2. TERM 1
3. RENT 1
4. TAXES AND UTILITIES 2
5. LATE CHARGE 3
6. PERSONAL GUARANTY ..... **ERROR! BOOKMARK NOT DEFINED.**
7. USE OF PREMISES 3
8. ACCEPTANCE OF PREMISES 3
9. SURRENDER 4
10. ALTERATIONS AND ADDITIONS 4
11. MAINTENANCE AND REPAIRS OF PREMISES 4
12. LANDLORD'S INSURANCE 5
13. TENANT'S INSURANCE 5
14. INDEMNIFICATION 6
15. SUBROGATION 6
16. FREE FROM LIENS 7
17. ENTRY BY LANDLORD 7
18. ASSIGNMENT AND SUBLETTING 7
19. DEFAULT 8
20. NOTICE OF DEFAULT AND LANDLORD'S REMEDIES 9
21. LANDLORD'S RIGHT TO PERFORM TENANT'S OBLIGATIONS 11
22. ATTORNEYS' FEES 12
23. TAXES 12
24. EFFECT OF CONVEYANCE 12
25. TENANT'S ESTOPPEL CERTIFICATE 12
26. SUBORDINATION 13
27. ENVIRONMENTAL COVENANTS 13
28. NOTICES 16
29. WAIVER 16
30. HOLDING OVER 16
31. SUCCESSORS AND ASSIGNS 17

32. TIME 17
33. BROKERS 17
34. LIMITATION OF LIABILITY 17
35. RULES AND REGULATIONS 18
36. ENTIRE AGREEMENT 18
37. INTEREST 18
38. CONSTRUCTION 18
39. REPRESENTATIONS AND WARRANTIES OF TENANT 19
40. OFAC LIST. 19
41. RENEWAL 19
42. JURY TRIAL WAIVER; CONSENT TO VENUE 20
43. RECORDATION 20
44. FORCE MAJEURE 20
45. ACCEPTANCE 20
46. MISCELLANEOUS PROVISIONS 20

LEASE AGREEMENT

BASIC LEASE INFORMATION

Lease Date:	_____, 2026
Landlord:	HARDEE COUNTY INDUSTRIAL DEVELOPMENT AUTHORITY**,** a dependent special district and body politic and corporate of the State of Florida
Landlord's Address:	The Development Group 107 E. Main Street Wauchula, FL 33873 Attention: Denise Grimsley Email: denise.grimsley@thedevelopmentgroup.net All notices sent to Landlord under this Lease shall be sent to the above address, with copies to:
	Kaylee A. Tuck, Esq. GrayRobinson, P.A. 1404 Dean Street, Suite 300 Fort Myers, FL 33901 Email: kaylee.tuck@gray-robinson.com
Tenant:	Troublesome Creek Cattle Company, Inc.
Tenant's Contact Person:	Donald E. Thompson, Jr.
Tenant's Address and Telephone Number:	120 W Lake Trout Drive Avon Park, FL 33825 (_____) _____
Premises:	The property described on Exhibit A attached hereto and pursuant to the terms of this Lease.
Premises Address:	1390 Mott Rd., Hardee County, Florida (Parcel ID: 29-33-25-0873-00000-0028)
Length of Term:	One (1) year from the Commencement Date with optional Renewal Terms as defined below
Commencement Date:	The date on which the last party signs this Agreement
Rent Commencement Date:	The 1st day of the month following the Commencement Date
Expiration Date:	The date upon which the Term of this Lease expires

Base Rent:	As determined pursuant to Paragraph 2 of this Lease
Permitted Use:	Pastureland for cattle grazing and cow/calf operation with no structures or improvements to the property, and for no other uses

LEASE AGREEMENT

THIS LEASE AGREEMENT is made and entered into by and between Landlord and Tenant on the Lease Date. The defined terms used in this Lease which are defined in the Basic Lease Information attached to this Lease Agreement ("**Basic Lease Information**") shall have the meaning and definition given them in the Basic Lease Information. The Basic Lease Information, the exhibits, and this Lease Agreement are and shall be construed as a single instrument and are referred to herein as the "**Lease**".

1. DEMISE

In consideration for the rents and all other charges and payments payable by Tenant, and for the agreements, terms and conditions to be performed by Tenant in this Lease, Landlord does hereby lease to Tenant, and Tenant does hereby hire and take from Landlord, the Premises described on **Exhibit "A"** and in the Basic Lease Information (the "**Premises**"), upon the agreements, terms and conditions of this Lease for the Term hereinafter stated.

2. TERM

The term of this Lease (the "**Term**") shall be for the period specified in the Basic Lease Information, commencing on the Commencement Date, and any Renewal Terms as specified in Section 41 of this Lease.

Notwithstanding any provisions herein to the contrary, Landlord and Tenant shall each have the right to terminate this Lease, with or without cause, upon thirty (30) days written notice to the other party. In the event of termination prior to the expiration of a Term, the Base Rent prepaid for the Term shall be prorated as of the date the Lease is terminated, and such amount shall be refunded to Tenant.

3. RENT

3.1 **Rent Commencement Date and Base Rent Calculation.** The Rent Commencement Date shall be the date that is the 1st day of the month after the Commencement Date and the Base Rent due under this Lease shall be paid on the Rent Commencement Date. Tenant shall pay to Landlord, at the address set forth above, or at such other address or addresses as Landlord may designate from time to time, as rent for the Leased Premises, a total amount of **Forty and 00/100 Dollars ($40.00) per acre, such acreage for the Premises being an agreed upon 20 acres for a total annual Base Rent of $800.** On the date that is the one-year anniversary of the Rent Commencement Date, and all such subsequent one-year anniversaries throughout the term of this Lease, Tenant shall pay the Base Rent to Landlord, in advance, without further notice or demand and without offset, rebate, credit, or deduction for any reason whatsoever.

3.2 **Insurance Profits.** Landlord and Tenant hereby acknowledge that Tenant may, but shall not be obligated to, obtain insurance policies specific to Tenant's agriculture business located at lot 28, such as crop insurance or drought insurance. If Tenant chooses to obtain such insurance specific to Tenant's agriculture business located on the Premises and such policies result in

payment of a claim, Landlord shall be entitled to Fifty Percent (50%) of the profits from such insurance claim.

3.3 **Net Rental.** Except as otherwise provided herein, this Lease is a triple-net Lease with respect to Landlord and all costs, fees and expenses for the Premises and the ownership, use, and maintenance of the Premises shall be paid by Tenant. Additionally, Tenant shall be responsible for maintenance, repair, and replacement of any gates, fencing, and any other structures and improvements on the Premises. The Base Rent owed by Tenant to Landlord is absolutely net of all costs and expenses relating to the ownership and operation of the Premises except for the costs and expenses which are expressly set forth in this Lease as being the Landlord's obligations. The Base Rent owed to Landlord not to be reduced, offset or diminished, directly or indirectly, by any cost, charge or expense payable hereunder by Tenant or by others in connection with the Premises or any part thereof.

3.4 **General Payment Terms.** The Base Rent and all additional rent, and/or other sums payable by Tenant to Landlord hereunder, any late charges assessed pursuant to Paragraph 5 below and any interest assessed pursuant to this Lease are referred to as the "**Rent**". All Rent shall be paid without deduction, offset or abatement in lawful money of the United States of America and through a domestic branch of a United States financial institution, by check or electronic payment. Checks are to be made payable to Landlord and mailed to: Hardee County Industrial Development Authority, 107 East Main Street, Wauchula, FL 33873, or to such other person or place as Landlord may, from time to time, designate to Tenant in writing. Wiring instructions for electronic payments will be provided separately. Rent for any fractional part of a calendar month at the commencement or termination of the Lease term shall be a prorated amount of the Rent for a full calendar month based upon a thirty (30) day month. Tenant shall pay all sales taxes due upon any Rent due under this Lease.

4. TAXES AND UTILITIES

4.1 **Taxes**. Landlord shall be responsible for the payment of all real property taxes and assessments as it relates to the Premises; provided that Tenant shall be responsible for any taxes assessed against property that is the exclusive property of Tenant, including but not limited to tangible personal property taxes.

4.2 **Utilities.** Tenant shall pay the cost of all water, sewer use, sewer discharge fees, permit costs, sewer connection fees, gas, heat, electricity, refuse pick-up, janitorial service, landscaping services, telephone and all materials and services or other utilities (collectively, "**Utilities**") billed or metered to the Premises and/or Tenant, together with all taxes, assessments, charges and penalties added to or included within such cost. Tenant shall comply with energy conservation laws and regulations that may be implemented with respect to the Premises by utility providers or governmental entities.

Landlord shall not be liable for any loss, injury or damage to property caused by or resulting from any variation, interruption, or failure of Utilities due to any cause whatsoever, or from failure to make any repairs or perform any maintenance.

5. LATE CHARGE

If any Rent or other sums due from Tenant are not received by Landlord or by Landlord's designated agent within ten (10) days after their due date, then Tenant shall pay to Landlord a late charge equal to five percent (5%) of such overdue amount, plus any costs and attorneys' fees incurred by Landlord by reason of Tenant's failure to pay Rent and/or other charges when due. Such late charges represent a fair and reasonable estimate of the cost that Landlord will incur by reason of Tenant's late payment and shall not be construed as a penalty. Landlord's acceptance of such late charges shall not constitute a waiver of Tenant's default with respect to such overdue amount or estop Landlord from exercising any of the other rights and remedies granted under this Lease.

6. USE OF PREMISES

6.1 **Permitted Use.** The use of the Premises by Tenant and Tenant's agents, advisors, employees, partners, shareholders, directors, invitees and independent contractors (collectively, "**Tenant's Agents**") shall be solely for the Permitted Use specified in the Basic Lease Information and for no other use. Tenant shall not permit any odor, smoke, dust, gas, noise, or vibration to emanate from or near the Premises that would be considered objectionable taking into consideration the use of the Premises or in violation of any laws or ordinances. The Premises shall not be used to create any nuisance or trespass, for any illegal purpose, for any purpose not permitted by Laws, (as hereinafter defined), for any purpose that would invalidate the insurance or increase the premiums for insurance on the Premises.

6.2 **Compliance with Governmental Regulations and Private Restrictions.** Tenant and Tenant's Agents shall, at Tenant's expense, faithfully observe and comply with: (i) all municipal, state and federal laws, statutes, codes, rules, regulations, ordinances, requirements, and orders (collectively, "**Laws**"), now in force or which may hereafter be in force pertaining to the Premises or Tenant's use of the Premises.

6.3 **Storm Water Pollution Prevention Plan**. Tenant agrees to abide by all rules and regulations established by Landlord or any state, county, or federal agency regarding storm water pollution prevention with respect to the Premises. The stormwater pollution prevention plan is a major mechanism to comply with the National Pollution Discharge Elimination System (NPDES) Multi-Sector Generic Permit (MSGP) for stormwater discharge associated with industrial activities. The NPDES MSGP is administered by Florida Department of Environmental Protection (FDEP) and is defined in rule 62-621.100 et seq., F.A.C.

7. ACCEPTANCE OF PREMISES

By accepting delivery of the Premises, Tenant accepts the Premises as suitable for Tenant's intended use and as being in good and sanitary operating order, condition and repair, AS IS, and without representation or warranty by Landlord as to the condition, use or occupancy which may be made thereof. Landlord is not providing any security services with respect to the Premises, and Landlord shall not be liable to Tenant for, and Tenant waives any claim against Landlord with respect to, any bodily injury, loss by theft or any other damage suffered or incurred by Tenant or

Tenant's employees or visitors in connection with any unauthorized entry into the Premises or any other breach of security with respect to the Premises.

8. SURRENDER

On the last day of the Term, or on the sooner termination of this Lease, Tenant shall surrender the Premises to Landlord (a) in good condition and repair, and (b) otherwise in accordance with the requirements of this Lease. On or before the expiration or sooner termination of this Lease, (i) Tenant shall remove all of Tenant's Property (as hereinafter defined) and Tenant's signage from the Premises and the Premises and repair any damage caused by such removal, and (ii) Landlord may, by notice to Tenant given not later than ninety (90) days prior to the Expiration Date (except in the event of a termination of this Lease prior to the scheduled Expiration Date, in which event no advance notice shall be required), require Tenant at Tenant's expense to remove any or all Alterations and repair any damage caused by such removal. Any of Tenant's Property not so removed by Tenant as required herein shall be deemed abandoned and may be stored, removed, and disposed of by Landlord at Tenant's expense, and Tenant waives all claims against Landlord for any damages resulting from Landlord's retention and disposition of such property provided that Tenant shall remain liable to Landlord for all costs incurred in storing and disposing of such abandoned property of Tenant.

9. ALTERATIONS AND ADDITIONS

9.1 Tenant shall not make, or permit to be made, any alteration, addition or improvement (hereinafter referred to individually as an "**Alteration**" and collectively as the "**Alterations**") to the Premises or any part thereof without the prior written permission of Landlord.

9.2 Tenant shall not, at any time prior to or during the Term, directly or indirectly employ, or permit the employment of, any contractor, mechanic or laborer in the Premises, whether in connection with any Alteration or otherwise, if it is reasonably foreseeable that such employment will materially interfere or cause any material conflict with other contractors, mechanics, or laborers engaged in the construction, maintenance or operation of the Premises by Landlord, Tenant or others. In the event of any such interference or conflict, Tenant, upon demand of Landlord, shall cause all contractors, mechanics or laborers causing such interference or conflict to leave the Premises immediately.

10. MAINTENANCE AND REPAIRS OF PREMISES

Tenant shall, at its sole expense keep and maintain in good order and condition the Premises and Tenant's Property. Tenant's obligations under this Section 10 shall include an obligation to repair and, if necessary to keep an item in good repair, replacement. Tenant will be the sole occupant and will be responsible for holding and managing all maintenance contracts and maintaining the Premises. Tenant shall be solely responsible for maintenance, repair, and replacement of any and all gates, fencing, and any other improvements to the Premises. Landlord shall have no obligation to maintain, repair, or replace any fixtures or improvements on the Premises, and shall not be responsible for any disruption or loss of business or personal property as a result of damage or destruction to fixtures or improvements.

11. LANDLORD'S INSURANCE

Landlord may purchase and keep in force fire, extended coverage and "all risk" insurance covering the Premises and Tenant shall reimburse Landlord for the costs of maintaining such insurance. Tenant shall, at its sole cost and expense, comply with any and all reasonable requirements of any insurer providing fire and commercial general liability insurance covering the Premises. Tenant, within fifteen (15) days after demand from Landlord, shall reimburse Landlord, as Additional Rent, for the insurance premiums paid by Landlord for the Premises during the Term of this Lease and such reimbursement shall be made by Tenant to Landlord on an annual basis.

12. TENANT'S INSURANCE

12.1 **Commercial General Liability Insurance**. Tenant shall, at Tenant's expense, secure and keep in force a "broad form" commercial general liability insurance policy covering the Premises, insuring Tenant, and naming Landlord, and agents from time to time, and Landlord's lenders (collectively **"Landlord's Insureds"**), as additional insureds against any liability arising out of the ownership, use, occupancy or maintenance of the Premises. The minimum limit of coverage of such policy shall be in the amount of not less than Two Million Dollars ($2,000,000.00) for injury or death of one person in any one accident or occurrence and in the amount of not less than One Million Dollars ($1,000,000.00) for injury or death of more than one person in any one accident or occurrence, shall include an extended liability endorsement providing contractual liability coverage (including coverage for Tenant's indemnification obligations in this Lease), and shall contain a severability of interest clause or a cross liability endorsement. Such insurance shall further insure Landlord and Tenant against liability for property damage of at least Two Million Dollars ($2,000,000.00). Landlord may from time to time require reasonable increases in any such limits if Landlord believes that additional coverage is necessary or desirable. The limit of any insurance shall not limit the liability of Tenant hereunder. No policy maintained by Tenant under this Paragraph 12.1 shall contain a deductible greater than Two Thousand Five Hundred Dollars ($2,500.00). No policy shall be cancelable or subject to reduction of coverage without thirty (30) days' prior written notice to Landlord, and loss payable clauses shall be subject to Landlord's approval. Such policies of insurance shall be issued as primary policies and not contributing with or in excess of coverage that Landlord may carry, by an insurance company authorized to do business in the State of Florida is located for the issuance of such type of insurance coverage and rated A-:X or better in Best's Key Rating Guide.

12.2 **Personal Property Insurance**. Tenant shall maintain in full force and effect on all of its personal property, furniture, furnishings, trade or business fixtures and equipment (collectively, "**Tenant's Property**") on the Premises, a policy or policies of fire and extended coverage insurance with standard coverage endorsement to the extent of the full replacement cost thereof. No such policy shall contain a deductible greater than Two Thousand Five Hundred Dollars ($2,500.00). During the term of this Lease the proceeds from any such policy or policies of insurance shall be used for the repair or replacement of the fixtures and equipment so insured. Landlord shall have no interest in the insurance upon Tenant's equipment and fixtures and will sign all documents reasonably necessary in connection with the settlement of any claim or loss by Tenant. Landlord will not carry insurance on Tenant's possessions.

12.3 **Evidence of Coverage**. Tenant shall deliver to Landlord certificates of insurance and true and complete copies of any and all endorsements required herein for all insurance required to be maintained by Tenant hereunder at the time of execution of this Lease by Tenant. Tenant shall, at least thirty (30) days prior to expiration of each policy, furnish Landlord with certificates of renewal or "binders" thereof. Each certificate shall expressly provide that such policies shall not be cancelable or otherwise subject to modification except after thirty (30) days' prior written notice to Landlord and the other parties named as additional insureds as required in this Lease (except for cancellation for nonpayment of premium, in which event cancellation shall not take effect until at least ten (10) days' notice has been given to Landlord).

13. INDEMNIFICATION

13.1 **Of Landlord**. Tenant shall defend, protect, indemnify and hold harmless Landlord and Landlord's Agents against and from any and all claims, suits, liabilities, judgments, costs, demands, causes of action and expenses (including, without limitation, reasonable attorneys' fees, costs and disbursements) arising from (1) the use of the Premises by Tenant or Tenant's Agents, or from any activity done, permitted or suffered by Tenant or Tenant's Agents in or about the Premises, including any Hazardous Materials, (2) any act, neglect, fault, willful misconduct or omission of Tenant or Tenant's Agents, or from any breach or default in the terms of this Lease by Tenant or Tenant's Agents, and (3) any action or proceeding brought on account of any matter in items (1) or (2). If any action or proceeding is brought against Landlord by reason of any such claim, upon notice from Landlord, Tenant shall defend the same at Tenant's expense by counsel reasonably satisfactory to Landlord. As a material part of the consideration to Landlord, Tenant hereby releases Landlord and Landlord's Agents from responsibility for, waives its entire claim of recovery for and assumes all risk of (i) damage to property or injury to persons in or about the Premises from any cause whatsoever (except to the extent caused by the gross negligence or willful misconduct of Landlord or Landlord's Agents or by the failure of Landlord to observe any of the terms and conditions of this Lease, if such failure has persisted for an unreasonable period of time after written notice of such failure), or (ii) loss resulting from business interruption or loss of income at the Premises. The obligations of Tenant under this Paragraph 13 shall survive any termination of this Lease.

13.2 **No Impairment of Insurance**. The foregoing indemnity shall not relieve any insurance carrier of its obligations under any policies required to be carried by either party pursuant to this Lease, to the extent that such policies cover the peril or occurrence that results in the claim that is subject to the foregoing indemnity.

14. SUBROGATION

Landlord and Tenant hereby mutually waive any claim against the other and its Agent(s) for any loss or damage to any of their property located on or about the Premises that is caused by or results from perils covered by property insurance carried by the respective parties, to the extent of the proceeds of such insurance actually received with respect to such loss or damage, whether or not due to the negligence of the other party or its Agents. Because the foregoing waivers will preclude the assignment of any claim by way of subrogation to an insurance company or any other person, each party shall immediately notify its insurer, in writing, of the terms of these mutual waivers and have their insurance policies endorsed to prevent the invalidation of the insurance

coverage because of these waivers. Nothing in this Paragraph 15 shall relieve a party of liability to the other for failure to carry insurance required by this Lease.

15. FREE FROM LIENS

Tenant shall keep the Premises free from any liens arising out of any work performed, material furnished, or obligations incurred by or for Tenant. If Tenant shall not, within ten (10) days following the imposition of any such lien, cause the lien to be released of record by payment or posting of a proper bond, Landlord shall have in addition to all other remedies provided herein and by law the right but not the obligation to cause same to be released by such means as it shall deem proper, including payment of the claim giving rise to such lien. All such sums paid by Landlord and all expenses incurred by it in connection therewith (including, without limitation, attorneys' fees) shall be payable to Landlord by Tenant upon demand. Landlord shall have the right at all times to post and keep posted on the Premises any notices permitted or required by law or that Landlord shall deem proper for the protection of Landlord, the Premises and the Premises, from mechanics' and materialmen's liens. Tenant shall give to Landlord at least five (5) business days' prior written notice of commencement of any repair or construction on the Premises.

16. ENTRY BY LANDLORD

Tenant shall permit Landlord and Landlord's Agents to enter the Premises at all reasonable times, upon reasonable notice (except in the case of an emergency, for which no notice shall be required), and subject to Tenant's reasonable security arrangements, for the purpose of inspecting the same or showing the Premises to prospective purchasers, lenders or tenants or to provide services, alter, improve, maintain and repair the Premises as required or permitted by Landlord under the terms hereof, or for any other business purpose, without any rebate of Rent and without any liability to Tenant for any loss of occupation or quiet enjoyment of the Premises thereby occasioned (except for actual damages resulting from the sole active gross negligence or willful misconduct of Landlord); and Tenant shall permit Landlord to post notices of non-responsibility and "for sale" or "for lease" signs. No such entry shall be construed to be a forcible or unlawful entry into, or a detainer of, the Premises, or an eviction of Tenant from the Premises.

17. ASSIGNMENT AND SUBLETTING

17.1 Tenant shall not voluntarily or by operation of law (1) mortgage, pledge, hypothecate or encumber this Lease or any interest herein, (2) assign or transfer this Lease or any interest herein, sublease the Premises or any part thereof, or any right or privilege appurtenant thereto, or allow any other person (the employees and invitees of Tenant excepted) to occupy or use the Premises, or any portion thereof, without first obtaining the written consent of Landlord, which consent shall not be withheld unreasonably as set forth below in this Paragraph 19, provided that Tenant is not then in Default under this Lease nor is any event then occurring which with the giving of notice or the passage of time, or both, would constitute a Default hereunder.

17.2 Notwithstanding any assignment or subletting, Tenant and any guarantor or surety of Tenant's obligations under this Lease shall at all times remain fully and primarily responsible and liable for the payment of the Rent and for compliance with all of Tenant's other obligations

under this Lease (regardless of whether the approval of Landlord, or any such guarantor or surety, has been obtained for any such assignment or subletting).

17.3 Tenant shall pay Landlord's reasonable fees (including, without limitation, the fees and expenses of Landlord's counsel), incurred in connection with Landlord's review and processing of documents regarding any proposed assignment or sublease.

17.4 If the Premises or any part thereof is sublet or used or occupied by anyone other than Tenant, whether or not in violation of this Lease, Landlord may, after a Default by Tenant, collect Rent from the subtenant or occupant. In either event, Landlord may apply the net amount collected to Rent, but no such assignment, subletting, occupancy or collection shall be deemed a waiver of any of the provisions of this Paragraph, or the acceptance of the assignee, subtenant or occupant as tenant, or a release of Tenant from the further performance by Tenant of Tenant's obligations under this Lease. The consent by Landlord to an assignment, mortgaging, pledging, encumbering, transfer, use, occupancy or subletting pursuant to any provision of this Lease shall not, except as otherwise provided herein, relieve Tenant from obtaining the express consent of Landlord to any other or further assignment, mortgaging, pledging, encumbering, transfer, use, occupancy or subletting.

18. DEFAULT

18.1 **Tenant Default.** The occurrence of any one of the following events shall constitute an event of default on the part of Tenant ("**Default**"):

18.1.1 The vacating or abandonment of the Premises by Tenant for a period of ten (10) consecutive days or which would cause any insurance policy to be invalidated or otherwise lapse, or the failure of Tenant to continuously operate Tenant's business in the Premises, in each of the foregoing cases irrespective of whether or not Tenant is then in monetary default under this Lease;

18.1.2 Failure to pay any installment of Rent or any other monies due and payable hereunder on the day that the same is due and such failure continues for a period of three (3) days after notice from Landlord to Tenant of such failure;

18.1.3 A general assignment by Tenant or any guarantor or surety of Tenant's obligations hereunder (collectively, "**Guarantor**") for the benefit of creditors;

18.1.4 The filing of a voluntary petition in bankruptcy by Tenant or any Guarantor, the filing by Tenant or any Guarantor of a voluntary petition for an arrangement, the filing by or against Tenant or any Guarantor of a petition, voluntary or involuntary, for reorganization, or the filing of an involuntary petition by the creditors of Tenant or any Guarantor, said involuntary petition remaining undischarged for a period of sixty (60) days;

18.1.5 Receivership, attachment, or other judicial seizure of substantially all of Tenant's Property, such attachment or other seizure remaining undismissed or undischarged for a period of sixty (60) days after the levy thereof;

18.1.6 Death or disability of Tenant or any Guarantor, if Tenant or such Guarantor is a natural person, or the failure by Tenant or any Guarantor to maintain its legal existence, if Tenant or such Guarantor is a corporation, partnership, limited liability company, trust or other legal entity, provided that Tenant shall have thirty (30) days to substitute a Guarantor in the event of death or disability of any individual Guarantor;

18.1.7 Failure of Tenant to execute and deliver to Landlord any estoppel certificate or subordination agreement within the time periods set forth herein and/or failure by Tenant to deliver to Landlord any financial statement within the time period set forth herein;

18.1.8 An assignment or sublease, or attempted assignment or sublease, of this Lease or the Premises by Tenant contrary to the provisions of Paragraph 21 unless such assignment or sublease is expressly conditioned upon Tenant having received Landlord's consent thereto;

18.1.9 Failure to perform any of Tenant's covenants, agreements or obligations hereunder (except those failures specified as events of Default in any other subparagraphs of this Paragraph 20, which shall be governed by such other Paragraphs), which failure continues for ten (10) days after written notice thereof from Landlord to Tenant, provided that, if Tenant has exercised reasonable diligence to cure such failure and such failure cannot be cured within such ten (10) day period despite reasonable diligence, Tenant shall not be in default under this subparagraph so long as Tenant thereafter diligently and continuously prosecutes the cure to completion and actually completes such cure within thirty (30) days after the giving of such written notice;

18.1.10 Any insurance required to be maintained by Tenant pursuant to this Lease shall be canceled or terminated or shall expire or be reduced or materially changed, except as permitted in this Lease;

18.1.11 Any failure by Tenant to discharge any lien or encumbrance placed on the Premises or any part thereof in violation of this Lease within ten (10) business days after the date such lien or encumbrance is filed or recorded against the Premises or any part thereof.

19. NOTICE OF DEFAULT AND LANDLORD'S REMEDIES

19.1 **Notice of Default.** In the event of Default by Tenant involving the failure of Tenant to make any payment required by this Lease when due, Landlord shall provide Tenant a written Notice of Default. The failure to make any payment required by this Lease continues for three (3) days after written Notice of Default shall be considered a default entitling Landlord to immediately seek all remedies available pursuant to this Lease or at law.

In the event of Default by Tenant to comply with any obligation imposed upon Tenant by this Lease, other than the obligation to pay money, Landlord shall provide Tenant a written Notice of Default. The failure to comply with such obligation, other than the obligation to pay money, within fifteen (15) days after written Notice of Default from Landlord to Tenant shall be considered a default entitling Landlord to immediately seek all remedies available pursuant to this Lease or at law. Should the obligation be such that it cannot reasonably be corrected within fifteen (15) days, Tenant shall not be in default so long as Tenant is diligently proceeding to

comply and the noncompliance does not continue for over thirty (30) days after Notice of Default. A subsequent failure of Tenant to comply with the same obligation shall be a default without any grace period or further notice.

Such Notices of Default may be delivered by electronic mail, registered mail, or electronic mail followed by registered mail, and such Notice of Default shall be considered received upon delivery if by electronic mail and within two (2) days of deposit if by registered mail, whichever occurs first.

19.2 **Remedies.** In the event of any Default by Tenant, then in addition to any other remedies available to Landlord at law or in equity and under this Lease, Landlord may exercise any of the remedies set forth below:

19.2.1 Termination. Landlord may, pursuant to written notice thereof to Tenant, immediately terminate this Lease by delivering notice of Termination to Tenant and peaceably or pursuant to summary dispossession proceedings or other appropriate legal proceedings, re-enter, retake and resume possession of the Premises for Landlord's own account without being liable for any damages therefor.

19.2.2 Reletting. Landlord may, pursuant to any prior notice required by law, and without terminating this Lease, peaceably or pursuant to appropriate legal proceedings, re-enter, retake and resume possession of the Premises for the account of Tenant, make such alterations of and repairs to the Premises as may be reasonably necessary in order to relet the same or any part or parts thereof and relet or attempt to relet the Premises or any part or parts thereof for such term or terms (which may be for a term or terms extending beyond the Term), at such rents and upon such other terms and conditions as Landlord, in its sole, but reasonable, discretion, may deem advisable.

19.2.3 Acceleration. Landlord may, without re-entering, retaking or resuming possession of the Premises, sue for all Rent and all other sums, charges, payments, costs and expenses due from Tenant to Landlord hereunder.

19.2.4 Additional Rights and Remedies. In the event of any Default by Tenant, then in addition to any other remedies available to Landlord at law or in equity and under this Lease, Landlord may continue this Lease in effect after Tenant’s Default and abandonment and recover Rent as it becomes due. In addition, Landlord shall not be liable in any way whatsoever for its failure or refusal to relet the Premises. For purposes of this Paragraph 21.2.4, the following acts by Landlord will not constitute the termination of Tenant’s right to possession of the Premises: (i) acts of maintenance or preservation or efforts to relet the Premises, including, but not limited to, alterations, remodeling, redecorating, repairs, replacements and/or painting as Landlord shall consider advisable for the purpose of reletting the Premises or any part thereof; or (ii) the appointment of a receiver upon the initiative of Landlord to protect Landlord’s interest under this Lease or in the Premises.

19.3 **Re-Entry**. No re-entry or taking of possession of the Premises by Landlord pursuant to this Paragraph 21 shall be construed as an election to terminate this Lease unless a written notice of such intention is given to Tenant or unless the termination thereof is decreed by

a court of competent jurisdiction. Notwithstanding any reletting without termination by Landlord because of any Default by Tenant, Landlord may at any time after such reletting elect to terminate this Lease for any such Default.

19.4 **Cumulative Remedies**. The remedies herein provided are not exclusive and Landlord shall have any and all other remedies provided herein or by law or in equity.

19.5 **No Surrender**. No act or conduct of Landlord, whether consisting of the acceptance of the keys to the Premises, or otherwise, shall be deemed to be or constitute an acceptance of the surrender of the Premises by Tenant prior to the expiration of the Term, and such acceptance by Landlord of surrender by Tenant shall only flow from and must be evidenced by a written acknowledgment of acceptance of surrender signed by Landlord. The surrender of this Lease by Tenant, voluntarily or otherwise, shall not work a merger unless Landlord elects in writing that such merger take place, but shall operate as an assignment to Landlord of any and all existing subleases, or Landlord may, at its option, elect in writing to treat such surrender as a merger terminating Tenant's estate under this Lease, and thereupon Landlord may terminate any or all such subleases by notifying the sublessee of its election so to do within five (5) days after such surrender.

19.6 **Landlord's Lien**. In addition to any statutory lien Landlord has, Tenant hereby grants to Landlord a continuing security interest for all sums of money becoming due hereunder upon Tenant's Property, and such Property will not be removed from the Premises without the consent of Landlord until all sums of money then due Landlord have been first paid and discharged. If a default occurs under this Lease, Landlord will have, in addition to all other remedies provided herein or by law, all rights and remedies under the Uniform Commercial Code, including, without limitation, the right to sell the Tenant's Property at public or private sale upon five (5) days' notice to Tenant. This contractual lien will be in addition to any statutory lien for rent.

20. LANDLORD'S RIGHT TO PERFORM TENANT'S OBLIGATIONS

20.1 Without limiting the rights and remedies of Landlord contained in Paragraph 21 above, if Tenant shall be in Default in the performance of any of the terms, provisions, covenants or conditions to be performed or complied with by Tenant pursuant to this Lease, then Landlord may at Landlord's option, without any obligation to do so, and without notice to Tenant perform any such term, provision, covenant, or condition, or make any such payment and Landlord by reason of so doing shall not be liable or responsible for any loss or damage thereby sustained by Tenant or anyone holding under or through Tenant or any of Tenant's Agents.

20.2 If Landlord performs any of Tenant's obligations hereunder in accordance with this Paragraph 24, the full amount of the cost and expense incurred or the payment so made or the amount of the loss so sustained shall immediately be owing by Tenant to Landlord, and Tenant shall promptly pay to Landlord upon demand, as additional rent, the full amount thereof with interest thereon from the date of payment by Landlord at the lower of (i) eighteen percent (18%) per annum, or (ii) the highest rate permitted by applicable law.

21. ATTORNEYS' FEES

21.1 If either party hereto fails to perform any of its obligations under this Lease or if any dispute arises between the parties hereto concerning the meaning or interpretation of any provision of this Lease, then the defaulting party or the party not prevailing in such dispute, as the case may be, shall pay any and all costs and expenses incurred by the other party on account of such default and/or in enforcing or establishing its rights hereunder, including, without limitation, court costs and reasonable attorneys' and paralegals' fees and disbursements, whether incurred out of court, at trial, on appeal or in any administrative or bankruptcy proceeding.

21.2 Without limiting the generality of Paragraph 23.1 above, if Landlord utilizes the services of an attorney for the purpose of collecting any Rent due and unpaid by Tenant or in connection with any other breach of this Lease by Tenant, Tenant agrees to pay Landlord actual attorneys' fees and expenses as determined by Landlord for such services, regardless of the fact that no legal action may be commenced or filed by Landlord.

22. TAXES

Tenant shall be liable for and shall pay directly to the taxing authority, prior to delinquency, all taxes levied against Tenant's Property, including tangible personal property taxes and assessments. If any Alteration installed by Tenant or any of Tenant's Property is assessed and taxed with the Premises, Tenant shall pay such taxes to Landlord within ten (10) days after delivery to Tenant of a statement therefor.

23. EFFECT OF CONVEYANCE

"**Landlord**" means, from time to time, the then current owner of the Premises. In the event of any sale of the Premises, Landlord shall be and hereby is entirely freed and relieved of all covenants and obligations of Landlord hereunder, and it shall be deemed and construed, without further agreement between the parties and the purchaser at any such sale, that the purchaser of the Premises has assumed and agreed to carry out any and all covenants and obligations of Landlord hereunder.

24. TENANT'S ESTOPPEL CERTIFICATE

From time to time, upon written request of Landlord, Tenant shall execute, acknowledge and deliver to Landlord or its designee, an Estoppel Certificate in a form proscribed by Landlord or its designee. Any such Estoppel Certificate may be relied upon by a prospective purchaser of Landlord's interest or a mortgagee of (or holder of a deed of trust encumbering) Landlord's interest or assignee of any mortgage or deed of trust upon Landlord's interest in the Premises. If Tenant fails to provide such certificate within ten (10) days of receipt by Tenant of a written request by Landlord as herein provided, such failure shall, at Landlord's election, constitute a Default under this Lease, and Tenant shall be deemed to have given such certificate without modification and admitted the accuracy of any information supplied by Landlord to a prospective purchaser or mortgagee or deed of trust holder.

25. SUBORDINATION

At the option of Landlord, this Lease, and all rights of Tenant hereunder, are and shall be subject and subordinate to all ground leases, overriding leases and underlying leases affecting the Premises now or hereafter existing and each of the terms, covenants and conditions thereto (the "**Superior Lease(s)**"), and to all mortgages or trust deeds which may now or hereafter affect the Premises or any of such leases and each of the terms, covenants and conditions thereto (the "**Superior Mortgage(s)**"), whether or not such mortgages or trust deeds shall also cover other land, buildings or leases, to each and every advance made or hereafter to be made under such mortgages or trust deeds, and to all renewals, modifications, replacements and extensions of such leases and such mortgages or trust deeds and spreaders and consolidations of such mortgages or trust deeds. This Paragraph shall be self-operative and no further instrument of subordination shall be required.

Tenant shall promptly execute, acknowledge and deliver any reasonable instrument that Landlord, the lessor under any such lease or the holder of any such mortgage or trust deed or any of their respective successors in interest may reasonably request to evidence such subordination Without limiting the foregoing, Tenant's failure to execute, acknowledge and deliver such instrument within the aforesaid time period shall constitute a Default hereunder. As used herein the lessor of a Superior Lease or its successor in interest is herein called "**Superior Lessor**"; and the holder of a Superior Mortgage is herein called "**Superior Mortgagee**".

If any Superior Lessor or Superior Mortgagee shall succeed to the rights of Landlord under this Lease, whether through possession or foreclosure action or delivery of a new lease or deed (such party so succeeding to Landlord's rights herein called "**Successor Landlord**"), then Tenant shall attorn to and recognize such Successor Landlord as Tenant's landlord under this Lease (without the need for further agreement) and shall promptly execute and deliver any reasonable instrument that such Successor Landlord may reasonably request to evidence such attornment. This Lease shall continue in full force and effect as a direct lease between the Successor Landlord and Tenant upon all of the terms, conditions and covenants as are set forth in this Lease, except that the Successor Landlord shall not (a) be liable for any previous act or omission of Landlord under this Lease, except to the extent such act or omission shall constitute a continuing landlord default hereunder; (b) be subject to any offset, not expressly provided for in this Lease; or (c) be bound by any previous modification of this Lease or by any previous prepayment of more than one month's Base Rent, unless such modification or prepayment shall have been expressly approved in writing by the Successor Landlord (or its predecessor in interest).

26. ENVIRONMENTAL COVENANTS

26.1 As used in this Lease, the term **"Hazardous Materials"** means (i) any substance or material that is included within the definitions of "hazardous substances," "hazardous materials," "toxic substances," "pollutant," "contaminant," "hazardous waste," or "solid waste" in any Environmental Law; (ii) petroleum or petroleum derivatives, including crude oil or any fraction thereof, all forms of natural gas, and petroleum products or by-products or waste; (iii) polychlorinated biphenyls (**"PCB's"**); (iv) asbestos and asbestos containing materials (whether friable or non-friable); (v) lead and lead-based paint or other lead containing materials (whether friable or non-friable); (vi) urea formaldehyde; (vii) microbiological pollutants; (viii) batteries or

liquid solvents or similar chemicals; (ix) radon gas; and (x) mildew, fungus, mold, bacteria and/or other organic spore material.

26.2 **"Environmental Laws"** means all statutes, terms, conditions, limitations, restrictions, standards, prohibitions, obligations, schedules, plans and timetables that are contained in or promulgated pursuant to any federal, state or local laws (including rules, regulations, ordinances, codes, judgments, orders, decrees, contracts, permits, stipulations, injunctions, the common law, court opinions, and demand or notice letters issued, entered, promulgated or approved thereunder), relating to pollution or the protection of the environment, including laws relating to emissions, discharges, releases or threatened releases of Hazardous Materials into ambient air, surface water, ground water or lands or otherwise relating to the manufacture, processing, distribution, use, treatment, storage, disposal, transport or handling of Hazardous Materials including but not limited to the: Comprehensive Environmental Response Compensation and Liability Act of 1980 (CERCLA), as amended by the Superfund Amendments and Reauthorization Act of 1986 (SARA), 42 U.S.C. 9601 et seq.; Solid Waste Disposal Act, as amended by the Resource Conservation and Recovery Act of 1976 (RCRA), 42 U.S.C. 6901 et seq.; Federal Water Pollution Control Act, 33 U.S.C. 1251 et seq.; Toxic Substances Control Act, 15 U.S.C. 2601 et seq.; Clean Air Act, 42 U.S.C. 7401 et seq.; and the Safe Drinking Water Act, 42 U.S.C. § 300f et seq. **"Environmental Laws"** shall not include laws relating to industrial hygiene or worker safety, except to the extent that such laws address asbestos and asbestos containing materials (whether friable or non-friable) or lead and lead based paint or other lead containing materials.

26.3 During its use and occupancy of the Premises Tenant shall: (i) not (A) permit Hazardous Materials to be present on or about the Premises except in a manner and quantity necessary for the ordinary performance of Tenant's business or for normal quantities of cleaning and other business supplies customarily used in a warehouse space (B) release, discharge or dispose of any Hazardous Materials on, in, at, under, or emanating from, the Premises or the Premises; (ii) comply with all Environmental Laws relating to the Premises and the use of Hazardous Materials on or about the Premises and not engage in or permit others to engage in any activity at the Premises in violation of any Environmental Laws; and (iii) immediately notify Landlord of (A) any inquiry, test, investigation or enforcement proceeding by any governmental agency or authority against Tenant, Landlord or the Premises or Premises relating to any Hazardous Materials or under any Environmental Laws or (B) the occurrence of any event or existence of any condition that would cause a breach of any of the covenants set forth in this Paragraph 30.

26.4 If Tenant's use of Hazardous Materials on or about the Premises results in a release, discharge or disposal of Hazardous Materials on, in, at, under, or emanating from, the Premises or if Tenant becomes aware of Hazardous Materials at the Premises. Tenant shall promptly notify Landlord of same (and, in any event, deliver such notice within two (2) days of learning of same) and to the extent caused by Tenant or its Agents, investigate, clean up, remove or remediate such Hazardous Materials in full compliance with: (i) the requirements of (A) all Environmental Laws and (B) any governmental agency or authority responsible for the enforcement of any Environmental Laws; and (ii) any additional requirements of Landlord that are reasonably necessary to protect the value of the Premises.

Landlord shall also have the right, but not the obligation, to take whatever action with respect to any such Hazardous Materials that it deems necessary, in Landlord's sole discretion, to protect the value of the Premises. All costs and expenses paid or incurred by Landlord in the exercise of such right shall be payable by Tenant promptly upon demand.

26.5 Upon reasonable notice to Tenant, Landlord may inspect the Premises for the purpose of determining whether there exists on or about the Premises any Hazardous Material or other condition or activity that is in violation of this Lease or of any Environmental Laws.

26.6 Landlord shall have the right, but not the obligation, prior or subsequent to a Default, without in any way limiting Landlord's other rights and remedies under this Lease, to enter upon the Premises, or to take such other actions as it deems necessary or advisable, to investigate, clean up, remove or remediate any Hazardous Materials or contamination by Hazardous Materials present on, in, at, under, or emanating from, the Premises in violation of Tenant's obligations under this Lease or under any Environmental Laws. Notwithstanding any other provision of this Lease, Landlord shall also have the right, at its election, in its own name or as Tenant's agent, to negotiate, defend, approve and appeal, at Tenant's expense, any action taken or order issued by any governmental agency or authority with regard to any such Hazardous Materials or contamination by Hazardous Materials. All costs and expenses paid or incurred by Landlord in the exercise of the rights set forth in this Paragraph 30 shall be payable by Tenant promptly upon demand.

26.7 Tenant shall surrender the Premises to Landlord upon the expiration or earlier termination of this Lease free of Hazardous Materials and in a condition which complies with all Environmental Laws and any additional requirements of Landlord that are reasonably necessary to protect the value of the Premises. Such Tenant obligations shall be in addition to any other surrender requirements in this Lease and shall survive the expiration or earlier termination of this Lease. If it is determined by Landlord that the condition of all or any portion of the Premises is not in compliance with this Lease with respect to Hazardous Materials, debris, or waste, including, without limitation, all Environmental Laws, at the expiration or earlier termination of this Lease, then at Landlord's sole option, Landlord may require Tenant to hold over possession of the Premises until Tenant can surrender the Premises to Landlord in the condition in which the Premises existed as of the Commencement Date. The burden of proof hereunder shall be upon Tenant. For purposes hereof, the term "normal wear and tear" shall not include any deterioration in the condition or diminution of the value of any portion of the Premises in any manner whatsoever related to directly, or indirectly, Hazardous Materials. Any such holdover by Tenant will be with Landlord's consent, will not be terminable by Tenant in any event or circumstance and will otherwise be subject to the provisions of Paragraph 31 of this Lease.

26.8 Tenant shall indemnify and hold harmless Landlord from and against any and all claims, damages, fines, judgments, penalties, costs, losses (including, without limitation, loss in value of the Premises, liabilities and expenses (including attorneys', consultants' and experts' fees)) incurred by Landlord during or after the Term and directly attributable to (i) any Hazardous Materials placed on or about the Premises by Tenant or Tenant's Agents or resulting from the action or inaction of Tenant or Tenant's Agents, or (ii) Tenant's breach of any provision of this Paragraph 28. This indemnification includes, without limitation, any and all costs incurred by

Landlord due to any investigation of the site or any cleanup, removal or restoration mandated by a federal, state or local agency or political subdivision.

26.9 The provisions of this Paragraph 26 shall survive the expiration or earlier termination of this Lease.

27. NOTICES

Unless otherwise provided, all notices and demands which are required or may be permitted to be given to either party by the other hereunder shall be in writing and shall be sent by United States mail, postage prepaid, certified, or by personal delivery or overnight courier, addressed to the addressee at Tenant's Address or Landlord's Address as specified in the Basic Lease Information, or to such other place as either party may from time to time designate in a notice to the other party given as provided herein. Copies of all notices and demands given to Landlord shall additionally be sent to Landlord's property manager at the address specified in the Basic Lease Information or at such other address as Landlord may specify in writing from time to time. Notice shall be deemed given upon actual receipt (or attempted delivery if delivery is refused), if personally delivered, or one (1) business day following deposit with a reputable overnight courier that provides a receipt, or on the third (3rd) day following deposit in the United States mail in the manner described above. In no event shall either party use a post office box or other address which does not accept overnight delivery.

28. WAIVER

The waiver of any breach of any term, covenant or condition of this Lease shall not be deemed to be a waiver of such term, covenant or condition or of any subsequent breach of the same or any other term, covenant or condition herein contained. The subsequent acceptance of Rent by Landlord shall not be deemed a waiver of any preceding breach by Tenant, other than the failure of Tenant to pay the particular rental so accepted, regardless of Landlord's knowledge of such preceding breach at the time of acceptance of such Rent. No delay or omission in the exercise of any right or remedy of Landlord in regard to any Default by Tenant shall impair such a right or remedy or be construed as a waiver. Any waiver by Landlord of any Default must be in writing and shall not be a waiver of any other Default concerning the same or any other provisions of this Lease.

29. HOLDING OVER

Any holding over after the expiration of the Term, without the express written consent of Landlord, shall constitute a Default and, without limiting Landlord's remedies provided in this Lease, such holding over shall be construed to be a tenancy at sufferance, at a rental rate equal to one hundred fifty percent (150%) of the Base Rent last due in this Lease, plus additional rent, and shall otherwise be on the terms and conditions herein specified, so far as applicable; provided, however, that in no event shall any renewal or expansion option, option to purchase, or other similar right or option contained in this Lease be deemed applicable to any such tenancy at sufferance. If the Premises are not surrendered at the end of the Term or sooner termination of this Lease and in accordance with the provisions of this Lease, Tenant shall indemnify, defend and hold Landlord harmless from and against any and all loss or liability resulting from delay by Tenant

in so surrendering the Premises including, without limitation, any loss or liability resulting from any claim against Landlord made by any succeeding tenant or prospective tenant founded on or resulting from such delay and losses to Landlord due to lost opportunities to lease any portion of the Premises to any such succeeding tenant or prospective tenant, together with, in each case, actual attorneys' fees and costs.

30. SUCCESSORS AND ASSIGNS

The terms, covenants and conditions of this Lease shall, subject to the provisions as to assignment, apply to and bind the heirs, successors, executors, administrators and assigns of all of the parties hereto. If Tenant shall consist of more than one entity or person, the obligations of Tenant under this Lease shall be joint and several.

31. TIME

Time is of the essence of this Lease and each and every term, condition and provision herein.

32. BROKERS

Landlord and Tenant each represents and warrants to the other that neither it nor its officers or agents nor anyone acting on its behalf has dealt with any real estate broker except the Broker(s) specified in the Basic Lease Information in the negotiating or making of this Lease, and each party agrees to indemnify and hold harmless the other from any claim or claims, and costs and expenses, including attorneys' fees, incurred by the indemnified party in conjunction with any such claim or claims of any other broker or brokers to a commission in connection with this Lease as a result of the actions of the indemnifying party.

33. LIMITATION OF LIABILITY

In the event of any default or breach by Landlord under this Lease or arising in connection herewith or with Landlord's operation, management, leasing, repair, renovation, alteration or any other matter relating to the Premises or the Premises, Tenant's remedies shall be limited solely and exclusively to an amount which is equal to the interest in the Premises of the then current Landlord. For purposes of this Lease, "**Landlord Parties**" means, collectively Landlord, its member(s) manager, partners, beneficiaries, shareholders, officers, directors, trustees, employees, agents, or any successor in interest of any of them. Neither Landlord, nor any of the Landlord Parties shall have any personal liability therefor, and Tenant hereby expressly waives and releases such personal liability on behalf of itself and all persons claiming by, through or under Tenant. The limitations of liability contained in this Paragraph shall inure to the benefit of Landlord's and the Landlord Parties' present and future member, manager, partners, beneficiaries, officers, directors, trustees, shareholders, agents and employees, and their respective partners, heirs, successors and assigns. Under no circumstances shall any present or future partner of Landlord (if Landlord is a partnership), future member or manager in Landlord (if Landlord is a limited liability company) or trustee or beneficiary (if Landlord or any partner or member of Landlord is a trust), have any liability for the performance of Landlord's obligations under this Lease. Notwithstanding any contrary provision herein, neither Landlord nor the Landlord Parties shall be liable under any circumstances for injury or damage to, or interference with Tenant's business, including, but not

limited to, loss of profits, loss of rents or other revenues, loss of business opportunity, loss of goodwill or loss of use, in each case, however occurring. Nothing in this Lease shall be deemed or construed in any manner as a waiver of any privilege, immunity, limits of liability or other protections which are provided or available to Landlord under the doctrine of sovereign immunity or the limitations of liability as provided by Section 768.28, Florida Statutes and nothing in this Lease shall insure to the benefit of any third-party for the purpose of allowing any claim which would otherwise be barred under the doctrine of sovereign immunity or operation of law.

Notwithstanding anything to the contrary contained in this Lease, nothing in this Lease shall impose any obligations on Tenant or Landlord to be responsible or liable for, and each hereby waives and releases the other from all liability for consequential damages; provided, however, that this waiver and release shall expressly exclude those consequential damages incurred by Landlord in connection with (i) the holdover of the Premises by Tenant after the expiration or earlier termination of this Lease, (ii) the contamination of the Premises or any property resulting from the presence or use of Hazardous Materials caused or permitted by Tenant or Tenant's Agents, or (iii) any repair, physical construction or improvement work performed by or on behalf of Tenant in the Premises.

34. RULES AND REGULATIONS

Tenant shall comply with such reasonable rules and regulations as Landlord may adopt from time to time for the orderly and proper operation of the Premises.

35. ENTIRE AGREEMENT

This Lease, including the Exhibits and any Addenda attached hereto, which are hereby incorporated herein by this reference, contains the entire agreement of the parties hereto, and no representations, inducements, promises or agreements, oral or otherwise, between the parties, not embodied herein or therein, shall be of any force and effect. If there is more than one Tenant, the obligations hereunder imposed shall be joint and several.

36. INTEREST

Any installment of Rent and any other sum due from Tenant under this Lease which is not received by Landlord within ten (10) days from when the same is due shall bear interest from the date such payment was originally due under this Lease until paid at the lesser of (a) an annual rate equal to the maximum rate of interest permitted by law, or (b) an annual rate equal to eighteen (18%) per annum. Payment of such interest shall not excuse or cure any Default by Tenant. In addition, Tenant shall pay all costs and attorneys' fees incurred by Landlord in collection of such amounts.

37. CONSTRUCTION

This Lease shall be construed and interpreted in accordance with the laws of the State of Florida. No rule of construction to the effect that any ambiguities are to be resolved against the drafting party shall be employed in the interpretation of this Lease, including the Exhibits attached hereto. All captions in this Lease are for reference only and shall not be used in the interpretation of this Lease. Whenever required by the context of this Lease, the singular shall include the plural,

the masculine shall include the feminine, and vice versa. If any provision of this Lease shall be determined to be illegal or unenforceable, such determination shall not affect any other provision of this Lease and all such other provisions shall remain in full force and effect.

38. REPRESENTATIONS AND WARRANTIES OF TENANT

Tenant (and, if Tenant is a corporation, partnership, limited liability company or other legal entity, such corporation, partnership, limited liability company or entity) hereby makes the following representations and warranties, each of which is material and being relied upon by Landlord, is true in all respects as of the date of this Lease, and shall survive the expiration or termination of the Lease. Tenant shall re-certify such representations to Landlord periodically, upon Landlord's reasonable request.

38.1 The persons executing this Lease have the full right and authority to execute this Lease and to bind Tenant without the consent or approval of any other person or entity. Tenant has full power, capacity, authority and legal right to execute and deliver this Lease and to perform all of its obligations hereunder. This Lease is a legal, valid and binding obligation of Tenant, enforceable in accordance with its terms.

38.2 Tenant has not (i) made a general assignment for the benefit of creditors, (ii) filed any voluntary petition in bankruptcy or suffered the filing of an involuntary petition by any creditors, (iii) suffered the appointment of a receiver to take possession of all or substantially all of its assets, (iv) suffered the attachment or other judicial seizure of all or substantially all of its assets, (v) admitted in writing its inability to pay its debts as they come due, or (vi) made an offer of settlement, extension or composition to its creditors generally.

39. OFAC LIST.

Tenant hereby represents, warrants and covenants to Landlord that neither Tenant nor any person or entity that directly or indirectly (i) controls Tenant or (ii) has an ownership interest in Tenant of twenty-five percent (25%) or more, appears on the list of Specially Designated Nationals and Blocked Persons published by the Office of Foreign Assets Control of the U.S. Department of the Treasury. If at any time any of these representations becomes false, then it shall be considered a material default under this Lease.

40. RENEWAL

In the event that Tenant has an interest in extending the Term of this Lease and provided Tenant is not in Default under any of the terms and conditions of this Lease and has not been in Default at any time during the Term of this Lease, Tenant shall notify Landlord of such interest no later than thirty (30) days prior to the expiration date of this Lease and Landlord shall notify Tenant within three (3) days after receiving such notice whether (i) Landlord is not willing to extend the Term of this Lease, in which event this Lease shall terminate upon the then expiration date of this Lease or (ii) Landlord is willing to extend the Term of this Lease, in which event Landlord shall notify Tenant of the length of the renewal option, the rent for the renewal option and such other terms and conditions upon which Landlord is willing to extend the Term of this Lease (the "Renewal Terms").

41. JURY TRIAL WAIVER; CONSENT TO VENUE

41.1 Each party waives any right to trial by jury with respect to any action or proceeding (a) brought by Landlord, Tenant or any other party, relating to (i) this Lease and/or any understandings or prior dealings between the parties hereto or (ii) the Premises or the Premises or any part thereof.

41.2 Landlord and Tenant hereby waive any rights they may have in the selection of venue with respect to any action or proceeding (i) brought by Landlord, Tenant, or any other party, relating to (A) this Lease and/or any understandings or prior dealings between the parties hereto, or (B) the Premises, or (ii) to which Landlord is a party. Landlord and Tenant hereby stipulate and agree that the venue of any such suit shall be in Hardee County, Florida.

42. RECORDATION

Neither this Lease, nor any memorandum, affidavit or other writing with respect thereto, shall be recorded by Tenant or by any one acting through, under or on behalf of Tenant, and the recording thereof in violation of this provision shall make this Lease null and void at Landlord's election; provided, however, that Landlord shall be entitled to file a short form and memorandum of lease in the public records with regard to this Lease in a form acceptable to Landlord or its designee.

43. FORCE MAJEURE

Any prevention, delay or stoppage due to strikes, lockouts, labor disputes, acts of God, inability to obtain services, labor, or materials or reasonable substitutes therefor, governmental actions, civil commotions, fire or other casualty, and other causes beyond the reasonable control of the party obligated to perform, except with respect to the obligations imposed with regard to Rent and other charges to be paid by Tenant pursuant to this Lease (collectively, the **"Force Majeure"**), notwithstanding anything to the contrary contained in this Lease, shall excuse the performance of such party for a period equal to any such prevention, delay or stoppage and therefore, if this Lease specifies a time period for performance of an obligation of either party, that time period shall be extended by the period of any delay in such party's performance cause by a Force Majeure.

44. ACCEPTANCE

This Lease shall only become effective and binding upon full execution hereof by Landlord and delivery of a signed copy to Tenant and Landlord's receipt of any Letter of Credit.

45. MISCELLANEOUS PROVISIONS

The words "include," "includes," and "including" shall be deemed to be followed by the phrase "without limitation." The phrase **"business days"** means Monday through Friday, excluding holidays. If there shall be more than one person or entity comprising Tenant, the act of or notice from, or notice or refund to, or the signature of, any one or more of them, in connection with any matter arising under this Lease, including but not limited to, any renewal, extension, expiration, termination or modification of this Lease, shall be binding upon each and all of the

persons and entities comprising Tenant with the same force and effect as if each and all of them had so acted or so given or received such notice or refund or so signed.

IN WITNESS WHEREOF, Landlord and Tenant have executed and delivered this Lease as of the Lease Date specified in the Basic Lease Information.

LANDLORD:

HARDEE COUNTY INDUSTRIAL DEVELOPMENT AUTHORITY, a dependent special district and body politic and corporate of the State of Florida

By:_____
Robert C. Idsardi, Chair

ATTEST:

_____

Name:_____

Date:_____

TENANT*:*

TROUBLESOME CREEK CATTLE COMPANY, INC., a Florida for-profit corporation

By: _____
Donald E. Thompson, Jr., President

Date: _____

EXHIBIT A

LEGAL DESCRIPTION OF THE PREMISES

Lot 28, Hardee County Commerce Park Extension, as recorded in Plat Book B-58, Page 2, Public Records of Hardee County, Florida.

-End of Legal Description-

Premises depicted in the attached map.

Hardee County Property Appraiser

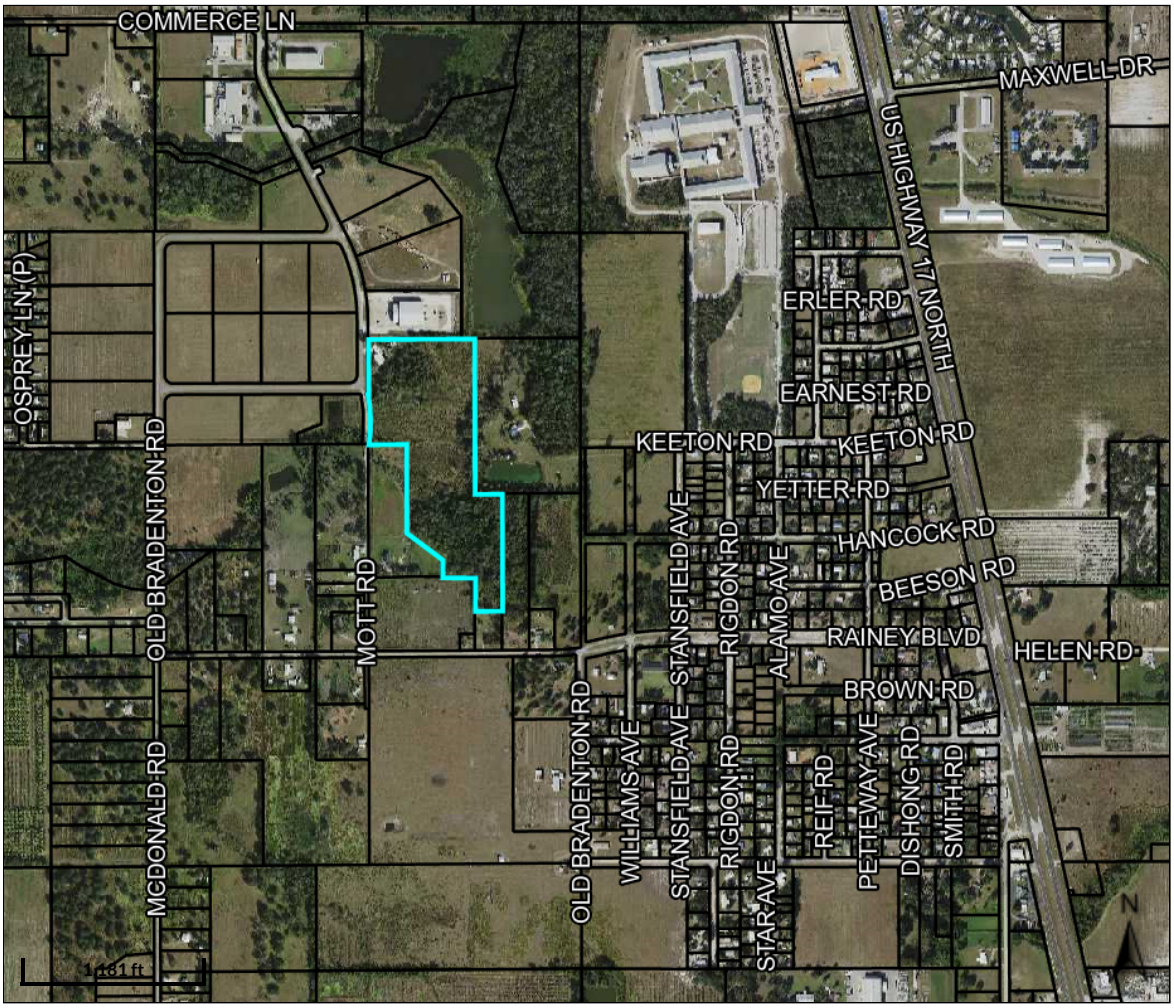

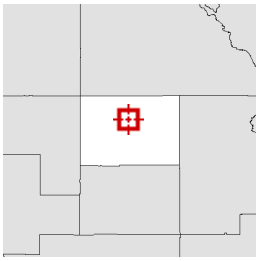

Parcel Number	29-33-25-0873-00000-0028	**Building Value**	$351,007	**Just Value**	$588,551	**Last 2 Sales**			
Alternate ID	18207	**Misc Value**	$9,269	**Assessed Value**	$307,117	**Date**	**Price**	**Vacant**	**Qual**
Mailing Address	HARDEE COUNTY INDUSTRIAL DEVELOPMENT AUTHORITY P O BOX 458 WAUCHULA, FL 33873	**Land Value**	$14,000	**Exempt Value**	$0	3/12/2008	$1526500	N	Q
		Ag Land Value	$3,210	**Taxable Value**	$307,117	n/a	0	N	n/a
Property Usage	IDA	**Ag Market Value**	$214,275						

Date created: 11/5/2026
Last Data Uploaded: 11/5/2026 4:00:35 AM

Developed by SCHNEIDER GEOSPATIAL

AGENDA ITEM NO. 5.4

Item Cover Page

ECONOMIC DEVELOPMENT COUNCIL/INDUSTRIAL DEVELOPMENT AUTHORITY AGENDA ITEM REPORT

DATE:	November 12, 2026
SUBMITTED BY:	TheDevelopmentGroup Office, Economic Development Council
ITEM TYPE:	Business Agenda - Action Items
AGENDA SECTION:	**AGENDA ITEMS**
SUBJECT:	**Krystin Chapman** - 3500 Mancini Place Insurance Cancellation **ACTION RECCOMENDED** - Motion to approve the cancellation of the insurance policy associated with 3500 Mancini Place and authorize staff to coordinate the cancellation and any necessary documents.
SUGGESTED ACTION:	

AGENDA ITEM NO. 5.5

Item Cover Page

ECONOMIC DEVELOPMENT COUNCIL/INDUSTRIAL DEVELOPMENT AUTHORITY AGENDA ITEM REPORT

DATE: November 12, 2026

SUBMITTED BY: TheDevelopmentGroup Office, Economic Development Council

ITEM TYPE: Business Agenda - Action Items

AGENDA SECTION: **AGENDA ITEMS**

SUBJECT: **Amy Tubbs -** Amendment to Rural Infrastructure Grant Agreement-Gardens at Midtown Parking Lot

ACTION RECOMMENDED - Motion to approve the Amendment to the Rural Infrastructure Grant Agreement-Gardens at Midtown Parking Lot between The Hardee County Industrial Development Authority and The Florida Department of Commerce and authorize Chair or Vice Chair to sign.

SUGGESTED ACTION:

ATTACHMENTS:
AmendmenttoRIFGrant.aspx.pdf

Docusign Envelope ID: 5546D31E-5321-8A7A-80DE-FED872AB09C0

AMENDMENT ONE
TO GRANT AGREEMENT
BETWEEN
THE FLORIDA DEPARTMENT OF COMMERCE
AND
HARDEE COUNTY INDUSTRIAL DEVELOPMENT AUTHORITY

On March 14, 2025, the **State of Florida, Department of Commerce** ("Commerce"), and **the Hardee County Industrial Development Authority (IDA)** ("Grantee") (collectively the "Parties"), entered into Rural Infrastructure Fund ("RIF") grant agreement D0305 ("Agreement"), pursuant to section 288.0655(2)(b), Florida Statutes.

WHEREAS, Paragraph D, Modification, of the Agreement provides that any amendment to the Agreement shall be in writing executed by the Parties thereto; and

WHEREAS, the Parties wish to amend the Agreement as set forth herein;

NOW THEREFORE, in consideration of the mutual covenants and obligations set forth herein, the receipt and sufficiency of which are hereby acknowledged, the Parties agree to the following:

1. The "WHEREAS" clause is hereby amended to add the following:

   - Attachment 4: PUR 1355: Foreign Country of Concern Attestation.
   - Attachment 5: PUR 2024: Use of Coercion for Labor or Services and PUR 2023: Provision of Commodities Produced by Forced Labor

2. This Agreement is hereby amended to add the following:

DD. CONTRACTING WITH ENTITIES OF FOREIGN COUNTRIES OF CONCERN PROHIBITED

If applicable, and in accordance with section 287.138, F.S., a contract between a governmental entity and an entity which would give access to an individual's personal identifying information which is executed, extended, or renewed on or after the dates provided in section 287.138(4), F.S., must include an attestation by the entity on Form PUR 1355, "Foreign Country of Concern Attestation Form," which is incorporated herein by reference.

If applicable, Grantee must provide Commerce with a signed Foreign Country of Concern Attestation Form pursuant to section 287.138(4), F.S., and rule 60A-1.020, F.A.C.

EE. FOREIGN INFLUENCE

In accordance with section 286.101, F.S., if this Agreement has a value of $100,000 or more, Grantee shall disclose to Commerce any current or prior interest of, any contract with, or any grant or gift received from a foreign country of concern if such interest, contract, or grant or gift has a value of $50,000 or more and such interest existed at any time or such contract or grant or gift was received or in force at any time during the previous five (5) years. The disclosure requirements are more fully defined within the statute. Grantee represents that it is, and for the duration of this Agreement will remain, in compliance with section 286.101, F.S.

Docusign Envelope ID: 5546D31E-5321-8A7A-80DE-FED872AB09C0

FF. HUMAN TRAFFICKING AND FORCED LABOR

If applicable and in accordance with section 287.1346(4)(b), F.S. and 787.06, F.S., when an agreement is executed, renewed, or extended between a nongovernmental entity and a governmental entity, the nongovernmental entity must provide the governmental entity with an affidavit signed by an officer or a representative of the nongovernmental entity under penalty of perjury attesting that the nongovernmental entity does not use coercion for labor or services or that commodities offered to Commerce have not been produced, in whole or in part, by forced labor as defined in statute.

If applicable, Grantee must provide Commerce with an affidavit signed by an officer or a representative of Grantee on Forms PUR 2023, "Provision of Commodities Produced by Forced Labor" and/or PUR 2024, "Use of Coercion for Labor or Services Attestation Form," which are incorporated herein by reference under penalty of perjury (Attachment 5) attesting that the Grantee does not use coercion for labor or services or that commodities offered to Commerce have not been produced, in whole or in part, by forced labor as defined in statute. Commerce may terminate this Agreement at its sole option if Grantee is placed on the forced labor vendor list pursuant to s. 287.1346, F.S.

3. **Section 2,** Grantee Responsibilities of Attachment 1 Scope of Work, is hereby deleted in its entirety and is replaced by the following:

2. GRANTEE'S RESPONSIBILITIES: Grantee shall, in addition to all other requirements set forth in the Agreement and this Scope of Work, complete the following tasks:

A. Construction

1.Prepare the site including permitting, grading, and mobilization of necessary equipment.

2.Construct a parking area along Main Street in downtown Wauchula according to approved engineering design and specifications with corresponding oversite of the project.

3. Replace and/or repair of any utilities, landscaping, roadway, or any other improvements disturbed or damaged during project activity.

4. Conduct Boundary Survey of newly purchased area for the parking lot and as-builts upon completion, including the electrical and sewer lines.

4. **Section 4,** Deliverables of Attachment 1 Scope of Work, is hereby deleted in its entirety and is replaced by the following:

4. DELIVERABLES:

Grantee agrees to provide the following services as specified:

Docusign Envelope ID: 5546D31E-5321-8A7A-80DE-FED872AB09C0

Deliverable No. 1 – Construction		
Tasks	**Minimum Level of Service**	**Financial Consequences**
The Grantee shall provide Construction activities as identified in Section 2.A, which shall be reimbursed upon satisfactory completion of an eligible task as detailed in this Scope of Work.	The Grantee may request reimbursement upon 5% increments until 95% and 100% completion of identified Construction task listed in Section 2.A. evidenced by submittal of the invoice(s) noting completed tasks as well as other supporting documentation, as applicable. 1)Invoice package as defined in section 6 of this scope of work. 2) A certification by a licensed contractor and engineer using AIA forms G702 and G703, or their substantive equivalents, certifying that the project, or a quantifiable portion of the project, is complete. 3) Provide a minimum of seven (7) before and after photos of the construction project. 4) Copy of Boundary or Topographic Survey 5)Copy of As-builts, including electrical and sewer. 6) Provide any construction permits	Failure to perform the Minimum Level of Service shall result in nonpayment for this deliverable for each payment requested. Commerce shall withhold 5% of the total deliverable amount until grantee provides proof to Commerce, and Commerce accepts that the deliverable is 100% complete.
		Deliverable No. 1 Not to Exceed: $1,478,822.00
		TOTAL AWARD NOT TO EXCEED: $1,478,822.00

5. Attachment 2, Audit Requirements, is hereby deleted in its entirety and replaced with the attached Attachment 2, Audit Requirements.

6. Attachment 3, Audit Compliance Certification, is hereby deleted in its entirety and replaced with the attached Attachment 3, Audit Compliance Certification.

7. This Agreement is hereby amended to add the attached Attachment 4 - PUR 1355: Foreign Country of Concern.

8. This Agreement is hereby amended to add the attached Attachment 5 - PUR 2024: Use of Coercion for Labor or Services and PUR 2023: Provision of Commodities Produced by Forced Labor.

9. All other terms and conditions of the Agreement not in conflict with this Amendment remain in full force and effect and are to be performed as specified in the Agreement.

Docusign Envelope ID: 5546D31E-5321-8A7A-80DE-FED872AB09C0

IN WITNESS HEREOF, by signature below, the Parties agree to abide by the terms, conditions, and provisions of Agreement D0305, as amended. The terms of this Amendment will become effective upon execution by Florida Department of Commerce.

FLORIDA DEPARTMENT OF COMMERCE		**HARDEE COUNTY INDUSTRIAL DEVELOPMENT AUTHORITY**	
By	_____ Signature	**By**	_____ Signature
	J. Alex Kelly		**Robert C. Idsardi**
Title	**Secretary**	**Title**	**Chairman**
Date	_____	**Date**	_____

Approved as to form and legal sufficiency, subject only to full and proper execution by the Parties.

OFFICE OF GENERAL COUNSEL
FLORIDA DEPARTMENT OF COMMERCE

By: _____

Approved Date: _____

Docusign Envelope ID: 5546D31E-5321-8A7A-80DE-FED872AB09C0

Attachment 2
AUDIT REQUIREMENTS

The administration of resources awarded by Commerce to the recipient (herein otherwise referred to as "Grantee") may be subject to audits and/or monitoring by Commerce as described in this Attachment 2.

MONITORING. In addition to reviews of audits conducted in accordance with 2 CFR 200, Subpart F - Audit Requirements, and section 215.97, Florida Statutes (F.S.), as revised (see AUDITS below), monitoring procedures may include, but not be limited to, on-site visits by Commerce staff, limited scope audits as defined by 2 CFR §200.425, or other procedures. By entering into this agreement, the recipient agrees to comply and cooperate with any monitoring procedures or processes deemed appropriate by Commerce. In the event the Commerce determines that a limited scope audit of the recipient is appropriate, the recipient agrees to comply with any additional instructions provided by Commerce staff to the recipient regarding such audit. The recipient further agrees to comply and cooperate with any inspections, reviews, investigations, or audits deemed necessary by the Chief Financial Officer (CFO) or Auditor General.

AUDITS.

PART I: FEDERALLY FUNDED. This part is applicable if the recipient is a state or local government or a nonprofit organization as defined in 2 CFR §200.90, §200.64, and §200.70.

1. A recipient that expends $1,000,000 or more in federal awards in its fiscal year must have a single or program-specific audit conducted in accordance with the provisions of 2 CFR 200, Subpart F - Audit Requirements. EXHIBIT 1 to this form lists the federal resources awarded through Commerce by this agreement. In determining the federal awards expended in its fiscal year, the recipient shall consider all sources of federal awards, including federal resources received from Commerce. The determination of amounts of federal awards expended should be in accordance with the guidelines established in 2 CFR §§200.502-503. An audit of the recipient conducted by the Auditor General in accordance with the provisions of 2 CFR §200.514 will meet the requirements of this Part.

2. For the audit requirements addressed in Part I, paragraph 1, the recipient shall fulfill the requirements relative to auditee responsibilities as provided in 2 CFR §§200.508-512.

3. A recipient that expends less than $1,000,000 in federal awards in its fiscal year is not required to have an audit conducted in accordance with the provisions of 2 CFR 200, Subpart F - Audit Requirements. If the recipient expends less than $1,000,000 in federal awards in its fiscal year and elects to have an audit conducted in accordance with the provisions of 2 CFR 200, Subpart F - Audit Requirements, the cost of the audit must be paid from non-federal resources (i.e., the cost of such an audit must be paid from recipient resources obtained from other than federal entities).

PART II: STATE FUNDED. This part is applicable if the recipient is a nonstate entity as defined by Section 215.97(2), Florida Statutes.

1. In the event that the recipient expends a total amount of state financial assistance equal to or in excess of $750,000 in any fiscal year of such recipient (for fiscal years ending June 30, 2017, and thereafter), the recipient must have a state single or project-specific audit for such fiscal year in accordance with section 215.97, F.S.; Rule Chapter 69I-5, F.A.C., State Financial Assistance; and Chapters 10.550 (local governmental entities) and 10.650 (nonprofit and for-profit organizations), Rules of the Auditor General. EXHIBIT 1 to this form lists the state financial assistance awarded through Commerce by this agreement. In determining the state financial assistance expended in its fiscal year, the recipient shall consider all sources of state financial assistance, including state financial assistance

Docusign Envelope ID: 5546D31E-5321-8A7A-80DE-FED872AB09C0

received from Commerce, other state agencies, and other nonstate entities. State financial assistance does not include federal direct or pass-through awards and resources received by a nonstate entity for federal program matching requirements.

2. For the audit requirements addressed in Part II, paragraph 1, the recipient shall ensure that the audit complies with the requirements of section 215.97(8), F.S. This includes submission of a financial reporting package as defined by section 215.97(2), F.S., and Chapters 10.550 (local governmental entities) and 10.650 (nonprofit and for-profit organizations), Rules of the Auditor General.

3. If the recipient expends less than $750,000 in state financial assistance in its fiscal year (for fiscal years ending June 30, 2017, and thereafter), an audit conducted in accordance with the provisions of section 215.97, F.S., is not required. If the recipient expends less than $750,000 in state financial assistance in its fiscal year and elects to have an audit conducted in accordance with the provisions of section 215.97, F.S., the cost of the audit must be paid from the nonstate entity's resources (i.e., the cost of such an audit must be paid from the recipient's resources obtained from other than state entities).

PART III: OTHER AUDIT REQUIREMENTS.

(NOTE: This part would be used to specify any additional audit requirements imposed by the State awarding entity that are solely a matter of that State awarding entity's policy (i.e., the audit is not required by Federal or State laws and is not in conflict with other Federal or State audit requirements). Pursuant to Section 215.97(8), Florida Statutes, State agencies may conduct or arrange for audits of state financial assistance that are in addition to audits conducted in accordance with Section 215.97, Florida Statutes. In such an event, the State awarding agency must arrange for funding the full cost of such additional audits.)

N/A

PART IV: REPORT SUBMISSION.

1. Copies of reporting packages for audits conducted in accordance with 2 CFR 200, Subpart F - Audit Requirements, and required by Part I of this form shall be submitted, when required by 2 CFR §200.512, by or on behalf of the recipient directly to the Federal Audit Clearinghouse (FAC) as provided in 2 CFR §200.36 and §200.512.

   The FAC's website provides a data entry system and required forms for submitting the single audit reporting package. Updates to the location of the FAC and data entry system may be found at the OMB website.

2. Copies of financial reporting packages required by Part II of this form shall be submitted by or on behalf of the recipient directly to each of the following:

   a. Commerce at each of the following addresses:

   Electronic copies (preferred):
   Audit@Commerce.fl.gov

   or

   Paper (hard copy):
   Florida Department of Commerce
   MSC # 75, Caldwell Building
   107 East Madison Street
   Tallahassee, FL 32399-4126

   b. The Auditor General's Office at the following address:

   Auditor General
   Local Government Audits/342
   Claude Pepper Building, Room

Docusign Envelope ID: 5546D31E-5321-8A7A-80DE-FED872AB09C0

401 111 West Madison Street
Tallahassee, Florida 32399-1450

The Auditor General's website (https://flauditor.gov/) provides instructions for filing an electronic copy of a financial reporting package.

3. Copies of reports or the management letter required by Part III of this form shall be submitted by or on behalf of the recipient directly to:

Electronic copies (preferred):	or	Paper (hard copy):
Audit@Commerce.fl.gov		Florida Department of Commerce MSC # 75, Caldwell Building 107 East Madison Street Tallahassee, FL. 32399-4126

4. Any reports, management letters, or other information required to be submitted Commerce pursuant to this agreement shall be submitted timely in accordance with 2 CFR §200.512, section 215.97, F.S., and Chapters 10.550 (local governmental entities) and 10.650 (nonprofit and for-profit organizations), Rules of the Auditor General, as applicable.

5. Recipients, when submitting financial reporting packages to Commerce for audits done in accordance with 2 CFR 200, Subpart F - Audit Requirements, or Chapters 10.550 (local governmental entities) and 10.650 (nonprofit and for-profit organizations), Rules of the Auditor General, should indicate the date that the reporting package was delivered to the recipient in correspondence accompanying the reporting package.

PART V: RECORD RETENTION. The recipient shall retain sufficient records demonstrating its compliance with the terms of this Agreement for a period of five (5) years from the date the audit report is issued, or five (5) state fiscal years after all reporting requirements are satisfied and final payments have been received, whichever period is longer, and shall allow Commerce, or its designee, CFO, or Auditor General access to such records upon request. The recipient shall ensure that audit working papers are made available to Commerce, or its designee, CFO, or Auditor General upon request for a period of five (5) years from the date the audit report is issued, unless extended in writing by Commerce. In addition, if any litigation, claim, negotiation, audit, or other action involving the records has been started prior to the expiration of the controlling period as identified above, the records shall be retained until completion of the action and resolution of all issues which arise from it, or until the end of the controlling period as identified above, whichever is longer.

- Remainder of Page Intentionally Left Blank –

Docusign Envelope ID: 5546D31E-5321-8A7A-80DE-FED872AB09C0

Attachment 3

AUDIT COMPLIANCE CERTIFICATION

Grantee Name:
FEIN:
Grantee's Fiscal Year:
Contact Person Name and Phone Number:
Contact Person Email Address:

1. Did Grantee expend state financial assistance, during its fiscal year, that it received under any agreement (e.g., agreement, grant, memorandum of agreement, memorandum of understanding, economic incentive award agreement, etc.) between Grantee and the Florida Department of Commerce (Commerce)? ____Yes _____ No

   If the above answer is yes, also answer the following before proceeding to item 2:

   Did Grantee expend $750,000 or more of state financial assistance (from Commerce and all other sources of state financial assistance combined) during its fiscal year? _____ Yes _____ No

   If yes, Grantee certifies that it will timely comply with all applicable state single or project-specific audit requirements of s. 215.97, Florida Statutes, and the applicable rules of the Department of Financial Services and the Auditor General.

2. Did Grantee expend federal awards, during its fiscal year that it received under any agreement (e.g., agreement, grant, memorandum of agreement, memorandum of understanding, economic incentive award agreement, etc.) between Grantee and Commerce? ____Yes _____ No

   If the above answer is yes, also answer the following before proceeding to execution of this certification:

   Did Grantee expend $1,000,000 or more in federal awards (from Commerce and all other sources of federal awards combined) during its fiscal year? _____ Yes _____ No

   If yes, Grantee certifies that it will timely comply with all applicable single or program-specific audit requirements of 2 CFR Part 200, Subpart F, as revised.

By signing below, I certify, on behalf of Grantee, that the above representations for items 1 and 2 are true and correct.

_____	_____
Signature of Authorized Representative	Date
_____	_____
Printed Name of Authorized Representative	Title of Authorized Representative

Docusign Envelope ID: 5546D31E-5321-8A7A-80DE-FED872AB09C0

ATTACHMENT 4

FOREIGN COUNTRY OF CONCERN ATTESTATION

(PUR 1355)

This form must be completed by an officer or representative of an entity submitting a bid, proposal, or reply to, or entering into, renewing, or extending, a contract with a Governmental Entity which would grant the entity access to an individual's Personal Identifying Information. Capitalized terms used herein have the definitions ascribed in Rule 60A-1.020, F.A.C.

Name of entity is not owned by the government of a Foreign Country of Concern, is not organized under the laws of nor has its Principal Place of Business in a Foreign Country of Concern, and the government of a Foreign Country of Concern does not have a Controlling Interest in the entity.

Under penalties of perjury, I declare that I have read the foregoing statement and that the facts stated in it are true.

Printed Name:

Title:

Signature: Date:

Docusign Envelope ID: 5546D31E-5321-8A7A-80DE-FED872AB09C0

ATTACHMENT 5

PUR 2024: Use of Coercion for Labor or Services

Pursuant to section 787.06(14), Florida Statutes, this portion of the form **must be completed by an officer or representative of the nongovernmental entity** executing, renewing, or extending a contract with a governmental entity.

The entity named below does not use coercion for labor or services as defined in section 787.06, Florida Statutes.

Under penalties of perjury, I declare that I have read the foregoing statement and that the facts stated in it are true.

Entity Name:

Representative/Officer's Printed Name:

Representative/Officer's Title:

Signature: Date:

PUR 2023: Provision of Commodities Produced by Forced Labor

Pursuant to section 287.1346(4)(b), Florida Statutes, this portion of the form **must be completed by a member of the company's senior management, as defined in section 287.1346, F.S.,** when the company submits a response to a solicitation for the provision of commodities and before the company enters into or renews a contract for the provision of commodities.

As defined in section 287.1346(c), Florida Statutes, "Senior management" includes chief executive officers; assistant chief executive officers, including, but not limited to, assistant presidents, vice presidents, or assistant treasurers; chief financial officers; chief personnel officers; or any employee of an entity performing similar functions.

I certify that to the best of my knowledge, the commodities the entity named below is offering to the Department have not been produced, in whole or in part, by forced labor.

Entity Name:

Senior Management's Printed Name:

Senior Management Member's Title:

Signature: Date:

AGENDA ITEM NO. 6.1

Item Cover Page

ECONOMIC DEVELOPMENT COUNCIL/INDUSTRIAL DEVELOPMENT AUTHORITY AGENDA ITEM REPORT

DATE:	November 12, 2026
SUBMITTED BY:	Melanie Roberts, Economic Development Council
ITEM TYPE:	Business Agenda - Action Items
AGENDA SECTION:	**FINANCIAL REPORT**
SUBJECT:	**Krystin Chapman** - October Financial Report **ACTION RECOMMENDED**: Motion to approve the October Financial Report as presented.
SUGGESTED ACTION:	

ATTACHMENTS:

1026 EDC Balance Sheet.pdf
1026 EDC Budget V Actual.pdf
102026 ONA MINE Balance Sheet.pdf
Ona Budget V Actual by Fund.pdf
102026 GF SR Balance Sheet.pdf
102026 Hardee County IDA GF and SR Profit and Loss by Class.pdf
Customer Balance Report.pdf
IDA GF Budget V Actual.pdf
IDA SR Budget V Actual.pdf

Hardee County Economic Development
Balance Sheet
As of Oct 31, 2026

	Total
Assets	
Current Assets	
Bank Accounts	
CBT EDC DDA	544,435.42
Total Bank Accounts	**$544,435.42**
Other Current Assets	
1112 Due from IDA	0.00
1299 Undeposited Funds	0.00
Total Other Current Assets	**$0.00**
Total Current Assets	**$544,435.42**
Fixed Assets	
Accum. Depreciation	-24,156.33
Office Equipment	39,296.75
Total Fixed Assets	**$15,140.42**
Total Assets	**$559,575.84**
Liabilities and Equity	
Liabilities	
Current Liabilities	
Accounts Payable	
2010 Accounts payable	210.27
Total Accounts Payable	**$210.27**
Other Current Liabilities	
020-0 Payroll Liabilities	0.00
020-1 Credit Card payable	0.00
Total Other Current Liabilities	**$0.00**
Total Current Liabilities	**$210.27**
Total Liabilities	**$210.27**
Equity	
3010 Unrestrict (retained earnings)	611,928.57
Net Income	-52,563.00
Total Equity	**$559,365.57**
Total Liabilities and Equity	**$559,575.84**

Hardee County Economic Development
Budget vs. Actuals
October, 2026-September, 2027

	YTD Actual October	Budget	Remaining	% of Budget (8.33%)
Income				
Carry Forward	407,000	407,000	-	100.00%
Interest		15,000	15,000	0.00%
Transfer In - IDA		500,000	500,000	0.00%
Transfer In IDA- Ona Mine		531,200	531,200	0.00%
Total Carry Forward & Income	**407,000**	**1,453,200**	**1,046,200**	**28.01%**
Expenses				
012-1 Paychex Fees	639	10,000	9,361	6.39%
012-2 Salary & Other Pay	34,057	500,000	465,943	6.81%
021-0 Payroll taxes	2,605	35,000	32,395	7.44%
022-0 Retirement Contributions 401K	2,159	37,500	35,341	5.76%
023-0 Staff Insurance	628	260,000	259,372	0.24%
031-1 Cleaning	860	6,000	5,140	14.33%
031-2 Legal		1,000	1,000	0.00%
031-3 Computer		6,000	6,000	0.00%
031-4 Landscaping	100	1,200	1,100	8.33%
031-5 Outside Services - Other		2,800	2,800	0.00%
040-2 Travel - Other	4,104	15,000	10,896	27.36%
043-1 Electric/Water/Sewer	509	6,000	5,491	8.48%
043-2 Telephone/Internet	80	1,000	920	8.03%
045-0 Insurance		4,000	4,000	0.00%
046-0 Repairs & Maintenance		500	500	0.00%
048-0 Promotional		12,000	12,000	0.00%
048-1 Annual Meeting		12,000	12,000	0.00%
051-0 Office Expense and Supplies	564	20,000	19,436	2.82%
041-0 Meals - Business Development		500	500	0.00%
054-0 Books, Dues, & Subscriptions	3,082	40,000	36,918	7.70%
055-0 Employee training	3,175	15,000	11,825	21.16%
Total Expenses	**52,563**	**985,500**	**932,937**	**5.33%**
Net Income	**354,437**	**467,700**	**113,263**	**75.78%**

Cash Basis

Hardee County IDA - Ona Mine

Balance Sheet

As of Oct 31, 2026

	Total
Assets	
Current Assets	
Bank Accounts	
CBT Ona Mine - Mosaic DDA	323,315.18
CBT Ona Mine CD 12/15/26 3.50%	17,568,219.00
Total Bank Accounts	**$17,891,534.18**
Accounts Receivable	
Accounts Receivable	0.00
Total Accounts Receivable	**$0.00**
Other Current Assets	
Due From General Fund	51,498.76
Due from S. Ft. Meade SR Fund	1,350.60
Inventory	0.00
Receivable from Vendor	0.00
Rent receivable	39,827.86
Undeposited Funds	0.00
Total Other Current Assets	**$92,677.22**
Total Current Assets	**$17,984,211.40**
Total Assets	**$17,984,211.40**
Liabilities and Equity	
Liabilities	
Current Liabilities	
Accounts Payable	
*Accounts Payable	0.00
Total Accounts Payable	**$0.00**
Other Current Liabilities	
Accounts Payable	0.00
Deferred Inflow	39,827.86
Due to S Ft Meade	10,122.59
Rent Payable	39,827.86
Sales Tax Payable	2,513.53
Total Other Current Liabilities	**$92,291.84**
Total Current Liabilities	**$92,291.84**
Total Liabilities	**$92,291.84**
Equity	
Retained Earnings	17,846,486.61
Net Income	45,432.95
Total Equity	**$17,891,919.56**
Total Liabilities and Equity	**$17,984,211.40**

Hardee County IDA - Ona Mine
Workforce Development Fund
October, 2026-September, 2027

	YTD Actual (October)	Budget	Remaining	% of Budget (8.33%)
Income				
Mosaic Base Payment Allocation 5%				
Carry Forward	776,000	776,000	-	100%
Interest Income	2,139	7,000	4,861	31%
Mosaic Income		100,000	100,000	0%
Total Carry Forward & Income	**778,139**	**883,000**	**104,861**	**88%**
Expenses				
Operations - Multi-Purpose Facility - Workforce Dev		718,404		
Grant Expenditures - Hardee Eduction Foundation		64,596	64,596	0%
Capital Outlay - Future Projects		100,000	100,000	0%
Total Expenses	**-**	**883,000**	**883,000**	**0%**
Net Income	**778,139**			

Accrual Basis

Hardee County IDA - Ona Mine
Infrastructure Development Fund
October, 2026-September, 2027

	YTD Actual (October)	Budget	Remaining	% of Budget (8.33%)
Income				
Mosaic Base Payment Allocation 20%				
Carry Forward	5,090,000	5,090,000	-	100%
Interest Income	14,525	50,000	35,475	29%
Mosaic Income		400,000	400,000	0%
Total Carry Forward & Income	**5,104,525**	**5,540,000**	**435,475**	**92%**
Expenses				
Transfer to EDC		75,000	75,000	0%
Grant Expenditures - Matching Contribution		50,000		
Capital Outlay - Gateway Entry Sign		80,000	80,000	0%
Capital Outlay - Bostick Lift Station		75,000	75,000	0%
Capital Outlay - Future Projects		2,760,000	2,760,000	0%
Capital Outlay - Catalyst Project		2,500,000	2,500,000	0%
Total Expenses	**-**	**5,540,000**	**5,540,000**	**0%**
Net Income	**5,104,525**			

Accrual Basis

Hardee County IDA - Ona Mine
General Economic Development Fund
October, 2026-September, 2027

	YTD Actual (October)	Budget	Remaining	% of Budget (8.33%)
Income				
Mosaic Base Payment Allocation 75%				
Carry Forward	11,710,000	11,710,000	-	100%
Interest Income	33,884	75,000	41,116	45%
Mosaic Income		1,500,000	1,500,000	0%
Rental Income - Solar Lease		341,200	341,200	0%
Total Carry Forward & Income	**11,743,884**	**13,626,200**	**1,882,316**	**86%**
Expenses				
Administrative Funds				
Transfer to EDC		175,000	175,000	0%
Capital Outlay - 101-111 E. Main		1,000,000	1,000,000	0%
Capital Outlay - 122 W. Main St		1,600,000	1,600,000	0%
Capital Outlay - Future Projects		5,230,000	5,230,000	0%
Insurance - Solar		5,000	5,000	0%
Marketing	5,115	280,000	274,885	2%
Operations - Multi-Purpose Facility - Gen Ec Dev		5,000,000	5,000,000	0%
Rent Expense - Solar		55,000	55,000	0%
Solar Revenue - Trans EDC		281,200	281,200	0%
Total Expenses	**5,115**	**13,626,200**	**13,621,085**	**0%**
Net Income	**11,738,769**			

Accrual Basis

Hardee County IDA - GF & SR

Balance Sheet

As of Oct 31, 2026

	Total
Assets	
Current Assets	
Bank Accounts	
101009 CBT Sales GF DDA	320,143.46
101013 CBT Mosaic CD 4/17/27 3.65%	11,141,428.90
101014 CBT Mosaic DDA	461,337.70
101015 CBT GF CD 12/15/26 3.5%	1,003,370.00
Total Bank Accounts	**$12,926,280.06**
Accounts Receivable	
115001 Accounts Receivable Rental Inc	372,809.29
115002 Additional Site Development	0.00
115003 Sales tax receivable	2,881.85
115004 Accrued Interest Receivable	0.00
Total Accounts Receivable	**$375,691.14**
Other Current Assets	
12000 Undeposited Funds	0.00
133006 Prepaid Insurance	-1,193.85
133016 R. Riverter LOC	77,731.81
133018 Utilitec - 126 W Main Deposit	0.00
Total Other Current Assets	**$76,537.96**
Total Current Assets	**$13,378,509.16**
Fixed Assets	
Land Available for Sale	
133010 SR Inventory - Moye parcel	0.00
161910 Terrell Property	376,662.22
161912 Contribution of Lot 13B/improv	60,521.74
Total for Land Available for Sale	**$437,183.96**
Total Fixed Assets	**$437,183.96**
Other Assets	
014200 Leases Receivable	4,778,222.13
1330132 Allowance for Uncollectible	-72,013.70
Due From Other Funds	
140000 GF's - Due from SR	0.00
140001 SR's - Due from GF	705,241.40
240000 GF's - Due to SR	-705,241.40
240001 SR's - Due to GF	0.00
Total for Due From Other Funds	**$0.00**
Due From Other Governments	
133001 Due from EDA	2,070.00
133111 Due from State of Florida	0.00
Total for Due From Other Governments	**$2,070.00**
Total Other Assets	**$4,708,278.43**
Total Assets	**$18,523,971.55**

	Total
Liabilities and Equity	
Liabilities	
Current Liabilities	
Accounts Payable	
202000 Accounts Payable	0.00
202002 Special Revenue A/P	1,770.00
Total Accounts Payable	**$1,770.00**
Other Current Liabilities	
202001 Deferred Inflow	2,070.00
220004 Sales Tax Payable	11,660.17
220007 Prepaid Rent- Innovar Structure	0.00
220010 GF's - Due to (from) Ona Mine	51,498.76
220012 Riveter Security Deposit	1,250.00
220014 SR's - Due to (from) Ona Mine	-8,771.99
220111 Due to Cesaroni - Excess Rent	48,297.32
222006 Retainage Payable - SR Fund	0.00
25500 *Sales Tax Payable	-31,388.94
Florida Dept. of Revenue Payable	31,195.99
Total Other Current Liabilities	**$105,811.31**
Total Current Liabilities	**$107,581.31**
Long-term Liabilities	
0290002 Deferred Inflow - Unavailable	8,925.75
029911 Deferred Inflows - Leases	4,448,212.60
Total Long-term Liabilities	**$4,457,138.35**
Total Liabilities	**$4,564,719.66**
Equity	
30000 Opening Balance Equity	0.00
Fund Balance	
3000 GF - Nonspendable	658,723.38
3001 SR - Restriced for Eco Dev Proj	13,941,800.69
3003 GF - Unassigned	1,445,727.49
Total for Fund Balance	**$16,046,251.56**
32000 Unrestricted Net Assets	-1,785,636.29
Net Income	-301,363.38
Total Equity	**$13,959,251.89**
Total Liabilities and Equity	**$18,523,971.55**

Hardee County IDA - GF and SR
Profit and Loss by Class, October 2026

	General Fund	0 Alton Carlton Rd (Parker)	101 E. Main (Mama Hen's Massage & Wellness)	101-107 E. Main (EDC Office)
Income				
361100 Interest Income GF	5,789.85			
361101 Interest income Mosaic accts				
362001 Rental Income	31.25		151.23	1,600.00
Total Income	**5,821.10**	**$0.00**	**151.23**	**1,600.00**
Gross Profit	**5,821.10**	**$0.00**	**151.23**	**1,600.00**
Expenses				
5193105 Professional Fees				
5193107 Governmental Consulting				
Total for 5193105 Professional Fees	**$0.00**	**$0.00**	**$0.00**	**$0.00**
5194301 Utilities				
519450 Insurance Expense		-44.44		
5194601 Repairs and Maintenance				
519460 Repairs and Maintenance GF				116.00
Total for 5194601 Repairs and Maintenance	**$0.00**	**$0.00**	**$0.00**	**116.00**
6007 Cap Outlay - Community Revitalization - Multi-Purpose Community Redevelopment				
Bank Charges	-7.35			
Real Estate Portfolio Management				
Total Expenses	**-7.35**	**-44.44**	**$0.00**	**116.00**
Net Operating Income	**5,828.45**	**44.44**	**151.23**	**1,484.00**
Net Income	**5,828.45**	**44.44**	**151.23**	**1,484.00**

111 E. Main (Frontline Roofing)	126 W. Main (Utilitech Bakery)	1510 US Hwy 17 N. (Innovar)	200 Block E. Main St.	2168 Commerce Ct (Lot 27)	2275 Commerce Ct (Florikan)	2280 Commerce Ct. (Cesaroni)
850.00	3,189.35	8,750.00		46,045.99	37,873.44	9,216.97
850.00	**3,189.35**	**8,750.00**	**$0.00**	**46,045.99**	**37,873.44**	**9,216.97**
850.00	**3,189.35**	**8,750.00**	**$0.00**	**46,045.99**	**37,873.44**	**9,216.97**
$0.00	**$0.00**	**$0.00**	**$0.00**	**$0.00**	**$0.00**	**$0.00**
$0.00	**$0.00**	**$0.00**	**$0.00**	**$0.00**	**$0.00**	**$0.00**
			400.00			
$0.00	**$0.00**	**$0.00**	**400.00**	**$0.00**	**$0.00**	**$0.00**
850.00	**3,189.35**	**8,750.00**	**-400.00**	**46,045.99**	**37,873.44**	**9,216.97**
850.00	**3,189.35**	**8,750.00**	**-400.00**	**46,045.99**	**37,873.44**	**9,216.97**

Hardee County IDA - GF and SR
Profit and Loss by Class, October 2026

2515 Commerce Ct (Mach Connect)	2549 Commerce (Aloha) Spec 12	897 S. 6th Ave (Old Incubator)	943 S. 6th Ave (Crews Bowling)	Administrative	Multi-Purpose Facility Grant	Total for General Fund	Special Revenue
						5,789.85	
							32,733.26
11,949.32	21,044.27		6,357.49			147,059.31	
11,949.32	**21,044.27**	**$0.00**	**6,357.49**	**$0.00**	**$0.00**	**152,849.16**	**32,733.26**
11,949.32	**21,044.27**	**$0.00**	**6,357.49**	**$0.00**	**$0.00**	**152,849.16**	**32,733.26**
				5,000.00		5,000.00	
$0.00	**$0.00**	**$0.00**	**$0.00**	**5,000.00**	**$0.00**	**5,000.00**	**$0.00**
		-47.47				-47.47	
		-596.91				-641.35	
						116.00	
$0.00	**$0.00**	**$0.00**	**$0.00**	**$0.00**	**$0.00**	**116.00**	**$0.00**
					483,754.20	483,754.20	
						-7.35	
						400.00	
$0.00	**$0.00**	**-644.38**	**$0.00**	**5,000.00**	**483,754.20**	**488,574.03**	**$0.00**
11,949.32	**21,044.27**	**644.38**	**6,357.49**	**-5,000.00**	**-483,754.20**	**-335,724.87**	**32,733.26**
11,949.32	**21,044.27**	**644.38**	**6,357.49**	**-5,000.00**	**-483,754.20**	**-335,724.87**	**32,733.26**

Housing - Gardens at Midtown	Spec Building 8- Main & 17	Total for Special Revenue	Total
			5,789.85
		32,733.26	32,733.26
			147,059.31
$0.00	**$0.00**	**32,733.26**	**$185,582.42**
$0.00	**$0.00**	**32,733.26**	**$185,582.42**
			5,000.00
$0.00	**$0.00**	**$0.00**	**$5,000.00**
			-47.47
-8.08	-1,620.15	-1,628.23	-2,269.58
			116.00
$0.00	**$0.00**	**$0.00**	**$116.00**
			483,754.20
			-7.35
			400.00
-8.08	**-1,620.15**	**-1,628.23**	**$486,945.80**
8.08	**1,620.15**	**34,361.49**	**-$301,363.38**
8.08	**1,620.15**	**34,361.49**	**-$301,363.38**

Hardee County IDA - GF
Customer Outstanding
Balance Detail Report
As of October 31, 2026

	Date	Transaction	Type	Num	Due date	Amount	Open balance
Debut Development, LLC							
	07/07/2025	Invoice	Late Fee	1310	07/07/2025	100.00	98.68
	10/22/2025	Invoice	Late Fee	1388	10/22/2025	100.00	100.00
	04/08/2026	Invoice	Late Fee	1495	04/08/2026	100.00	99.78
	06/09/2026	Invoice	Late Fee	1530	06/09/2026	100.00	100.00
	7/14/2026	Invoice	Late Fee	1549	06/09/2026	100.00	100.00
	10/1/2026	Invoice	Additional Rent - Insurance	1599	10/31/2026	4,845.88	4,845.88
Total for Debut Development, LLC						**$5,345.88**	**$5,344.34**

	Date	Transaction	Type	Num	Due date	Amount	Open balance
Mancini Foods							
	09/17/2025	Invoice	Insurance & Taxes	1358	03/16/2026	108,331.28	107,007.15
	02/01/2026	Invoice	Rent	1457	02/01/2026	16,526.16	16,526.16
	02/13/2026	Invoice	Late Fee	1462	02/13/2026	826.31	826.31
	03/01/2026	Invoice	Rent	1472	03/01/2026	16,526.16	16,526.16
	03/12/2026	Invoice	Late Fee	1477	03/12/2026	826.31	826.31
	04/01/2026	Invoice	Rent	1491	04/01/2026	16,526.16	16,526.16
	04/16/2026	Invoice	Late Fee	1498	04/16/2026	826.31	826.31
	04/16/2026	Invoice	Late Fee	1500	04/16/2026	5,350.36	5,350.36
	05/01/2026	Invoice	Rent	1510	05/01/2026	16,526.16	16,526.16
	05/11/2026	Invoice	Late Fee	1515	05/11/2026	826.31	826.31
	06/01/2026	Invoice	Rent	1524	06/01/2026	16,526.16	16,526.16
	06/19/2026	Invoice	Late Fee	1542	06/19/2026	826.31	826.31
Total for Mancini Foods						**$200,443.99**	**$199,119.86**

Bowl of Fun	Date	Transaction	Type	Num	Due date	Amount	Open balance
	7/12/2026	Invoice	Late Fee	1550	7/12/2026	315.00	315.00
	10/1/2026	Rent	Rent	1595	10/1/2026	6,054.75	6,054.75
	10/19/2026	Late Fee	10/19/2026	1601	10/19/2026	302.74	302.74
Total for Bowl of Fun						**$6,672.49**	**$6,672.49**

Hardee County IDA - GF & SR

General Fund

October, 2026-September, 2027

	YTD Actual (October)	Budget	Remaining	% of Budget (8.33%)
Income				
337499 Grant Proceeds		18,524,053	18,524,053	0%
361100 Interest Income GF	5,790	30,000	24,210	19%
362001 Rental Income	142,874	1,683,500	1,540,626	8%
381001 Transfer In Mosaic S. Ft. Meade		300,000	300,000	0%
Carry Forward	1350000	1,350,000	0	100%
Total Income	**$1,498,664**	**$21,887,553**	**20,388,889**	**7%**
Expenses				
5193105 Professional Fees	11300	250,000	238,700	5%
5193400 Landscaping and Grounds	9,949	65,000	55,052	15%
5194301 Utilities (Credit Balance due to receipt of multiple past due reimb pays from customer for FY26 in FY27)	(10,564)	6,000	16,564	-176%
519450 Insurance Expense	(641)	400,000	400,641	0%
5194601 Repairs and Maintenance	(864)	200,000	200,864	0%
519480 Advertising	76	2,000	1,924	4%
5194903 Property Taxes		300,000	300,000	0%
519840 Grant expenses		391,380	391,380	0%
6000 Capital Outlay	176,216	12,569,519	12,393,303	1%
6001 Transfer to EDC		250,000	250,000	0%
6006 Cap Outlay - Community Revitalization - Gardens at Midtown		1,461,447	1,461,447	0%
6007 Cap Outlay - Community Revitalization - Multi-Purpose Community Redevelopment	525,654	3,875,457	3,349,803	14%
6008 Cap Outlay - Future Projects		226,250	226,250	0%
Bank Charges	(7)	200	207	-4%
Real Estate Portfolio Management	400	1,890,300	1,889,900	0%
Total Expenses	**$711,517**	**21,887,553**	**21,176,036**	**3%**
Net Income	**$787,147**		**(787,147)**	

Cash

Hardee County IDA - GF & SR
Special Revenue
October, 2026-September, 2027

	YTD Actual (October)	Budget	Remaining	% of Budget (8.33%)
Income				
Carry Forward	12,945,805	12,945,805	-	100%
361101 Interest income Mosaic accts	32,733	300,000	267,267	11%
Total Income	**12,978,538**	**13,245,805**	**267,267**	**98%**
Expenses				
519840 Grant expenses		4,000,000	4,000,000	0%
5199101 Transfers Out Gen FD		300,000	300,000	0%
6000 Capital Outlay		755,000	755,000	0%
6001 Transfer to EDC		250,000	250,000	0%
6006 Cap Outlay - Gardens at Midtown		75,000	75,000	0%
6007 Cap Outlay - Community Revitalization - Multi-Purpose Community Redevelopment		1,000,000	1,000,000	0%
6008 Cap Outlay - Future Projects		6,865,805	6,865,805	0%
Total Expenses	**-**	**13,245,805**	**13,245,805**	**0%**
Net Income	**12,978,538**	**-**	**(12,978,538)**	

Accrual Basis