INDIAN TRAIL
IMPROVEMENT DISTRICT
EST. 1957

REGULAR MEETING BOARD OF SUPERVISORS AGENDA
WEDNESDAY, JANUARY 15, 2025 – 6:00 PM
ADMINISTRATIVE BUILDING
13476 61ST STREET NORTH
WEST PALM BEACH, FL 33412
HYBRID FORMAT: IN-PERSON (LIMITED SEATING)
VIA ZOOM: WWW.INDIANTRAIL.COM THEN CLICK [JOIN LIVE MEETING]

(Revised 01/15/2025)

AGENDA

---

1. CALL TO ORDER

2. PLEDGE OF ALLEGIANCE

3. ROLL CALL

4. WELCOMING REMARKS

4.1 Presidents Welcoming Remarks
Residents are encouraged to go to the District Website www.indiantrail.com for updated Meeting information..

4.2 Supervisors' Welcoming Remarks (1 minute each)
Each Supervisor has the opportunity to take one minute to make welcoming remarks.

5. AGENDA APPROVAL

5.1 Agenda Approval - Additions, Deletions, Substitutions
If there are no changes to the Agenda, the Board is requested to approve agenda, as presented.
If there are changes to the Agenda, the Board is requested to approve agenda, as amended.

6. PRESENTATIONS

6.1 Update on Economy by Nate Eckloff with Piper & Sandler Co.
Presentation Only

6.2 Presentation by Vice Mayor Sara Baxter on the State of the County, Roads Update, and ULDC
Presentation Only

6.3 PBSO Update by Lieutenant Darla Sauers
No Action Required.

6.4 Fire Rescue Update - District Chief Amanda Vomero
No Action Required.

7. REGULAR AGENDA

7.1 Consider: (1) **Amended and Restated Drainage Service Agreement** with D. R. Horton, Inc., as Successor-in-Interest to Northlake 20, LLC, (2) **Partial Release of Easement**; and (3) **Petition of D. R. Horton, Inc. to Initiate Unit Activation Process for Vintage Oaks Planned Unit of Development**, 1594 & 11690 Northlake Blvd, City of Palm Beach Gardens, Florida
(1) MOTION TO APPROVE:
Amended and Restated Drainage Service Agreement with D. R. Horton, Inc., as Successor-in-Interest to Northlake 20, LLC; and **Partial Release of Easement** (including Disposition of an Interest in Surplus Real Property); and
(2) BOARD DIRECTION:
Direct Staff to Initiate Unit Activation Process for Vintage Oaks Planned Unit of Development, 11594 & 11690 Northlake Blvd, City of Palm Beach Gardens, Florida, based on Landowner Petition.

8. OTHER GOVERNMENTAL UPDATES

9. PUBLIC INPUT (Non-Agenda Items) No Later than 7:30 PM

10. FACILITIES, PARKS & RECREATION AGENDA

10.1 Approval: Permit Applications for AAL Spring Season
Approval: Permit Applications for AAL Spring Season

10.2 Approval: Facility Use Permit for 143 Mind Body and Spirit
Motion to approve 143 Mind Body and Spirit's permit request to use Hamlin House for their Wellness Wednesday meditation/sound healing class, subject to staff and legal review.

10.3 Approval: Facility Use Permit for Seminole Ridge High School
Motion to approve Seminole Ridge High School permit request to use Sycamore Park for their beach volleyball season, subject to staff and legal review.

10.4 Approval: Facility Use Permit for The Academy of Dance and Acrobatics
Motion to approve The Academy of Dance and Acrobatics permit request to use Hamlin House for their dance classes, subject to staff and legal review.

11. CONSENT AGENDA

11.1 Approval: June 5, 2024 - Regular Board Meeting Minutes
Motion to approve the June 5, 2024 - Regular Board Meeting Minutes.

11.2 Approval: July 15, 2024 - Special Board Meeting Minutes
Motion to approve the July 15, 2024 - Special Board Meeting Minutes.

11.3 Approval: July 15, 2024 - Joint Workshop Meeting with the Acreage Athletic League (AAL) Minutes
Motion to approve the July 15, 2024 - Joint Workshop Meeting Minutes.

11.4 Approval: August 21, 2024 - Regular Board Meeting Minutes
Motion to approve the August 21, 2024 - Regular Board Meeting Minutes.

11.5 Approval: September 18, 2024 - Regular Board Meeting Minutes
Motion to approve the September 18, 2024 - Regular Board Meeting Minutes.

11.6 Approval: SP-0559 13980 89th WM with conditions and attachments.
Motion to approve SP-0559 13980 89th WM with conditions and attachments.

12. STAFF PRESENTATIONS (No Action Required)

13. SUPERVISOR BUSINESS (Discussion Only)

14. REPORTS (File and Receive)

14.1 District Attorney Report
Receive and file attached District Attorney Report.

14.2 Monthly Engineer's Report
Receive and File

14.3 AED Report
Motion to File and Receive

14.4 Operations and Maintenance Report
Receive and File

14.5 Parks and Recreation Report.
It is recommended the board receive and file.

14.6 Records Requests
Staff Recommends Board Members Receive and File the attached Records Request.

14.7 Resident Correspondence
There was () resident correspondence for the Month of November

14.8 Meeting Notice
Receive and file.

15. ADJOURNMENT

AGENDA ITEM NO. 4.1

INDIAN TRAIL
IMPROVEMENT DISTRICT
EST. 1957

Executive Summary

REGULAR MEETING BOARD OF SUPERVISORS

DATE: January 15, 2025

SUBMITTED BY: Heide Garcia

DEPARTMENT: Administration

ITEM TYPE: Reports

AGENDA SECTION: **WELCOMING REMARKS**

SUBJECT: Presidents Welcoming Remarks

BACKGROUND: President Accomando would like to take the opportunity to thank everyone for coming. She encourages everyone to familiarize themselves with the procedures for joining meetings and submitting public comment found on the District website: www.indiantrail.com then click on [Join Live Meeting] button.

FISCAL IMPACT: n/a

RECOMMENDATION: Residents are encouraged to go to the District Website www.indiantrail.com for updated Meeting information..

ATTACHMENTS:
Procedures for Joining Meetings and Submitting Public Comment for Board Meetings.pdf

Procedure for Joining Meetings and Submitting Public Comments for Board Meetings

Joining a Live Meeting:

Visit the District Website www.indiantrail.com and click on the green [Join Live Meeting] button. Then follow directions and links to Live Meeting.

Meeting Agenda:

Meeting Agenda can be found on the District Website www.indiantrail.com , click on green [Video, Minutes & Agenda Packets] button then click on the Meeting Agenda with links or the Agenda Packet with all pages of backup. For Archive Meetings click gray bar [BOS Meetings].

Viewing Meeting through Facebook Live:

Meetings are no longer streamed through Facebook Live.

Submission of Public Comment Cards for Board Meetings:

Public Comments can be submitted via email: commentcard@indiantrail.com **by noon the day of Meeting**. Please indicate the **Meeting Date**, **Agenda Item Number** and if you **DO or DO NOT** wish to speak during the Board Meeting.

If an attendee wishes to address the Board **using Zoom**, click the **raise hand feature** and wait to be recognized at which point the microphone will be unmuted.

Public Comments can also be mailed to or dropped off at the District Administration Building, 13476 61st Street North, Loxahatchee, FL 33470 (during regular business hours); however, **all advance of meeting public comments must be received by the District by noon the day of meeting.**

In-Person Public Comments. If attending the Board Meeting in person, comment cards must be submitted before the regular Agenda has started.

After the Meeting Room has reached capacity (110 people total), all other public is asked to wait outside. Public can join the meeting via Zoom in the parking lot. When the name is called for Public Comment, the resident can enter the Board Room to address the Board for 3:00 minutes (or designated time). After time is up, the resident will be asked to return outside.

Upcoming Important Dates:

Please refer to Item No. 12.9 – Notice of Meeting, for a listing of future meetings.

NOTE: Please continue to check the District website: www.indiantrail.com for updates.

DISCLAIMER: All Meetings are recorded and considered public record.

10/12/2021

AGENDA ITEM NO. 4.2

INDIAN TRAIL
IMPROVEMENT DISTRICT
EST. 1957

Executive Summary

REGULAR MEETING BOARD OF SUPERVISORS

DATE:	January 15, 2025
SUBMITTED BY:	Heide Garcia
DEPARTMENT:	Administration
ITEM TYPE:	Discussion Item
AGENDA SECTION:	**WELCOMING REMARKS**
SUBJECT:	Supervisors' Welcoming Remarks (1 minute each)
BACKGROUND:	All Supervisors thank residents and guests for attending District Meetings.
FISCAL IMPACT:	None.
RECOMMENDATION:	Each Supervisor has the opportunity to take one minute to make welcoming remarks.

ATTACHMENTS:

AGENDA ITEM NO. 5.1

INDIAN TRAIL
IMPROVEMENT DISTRICT
EST. 1957

Executive Summary

REGULAR MEETING BOARD OF SUPERVISORS

DATE:	January 15, 2025
SUBMITTED BY:	Heide Garcia
DEPARTMENT:	Administration
ITEM TYPE:	Discussion Item
AGENDA SECTION:	**AGENDA APPROVAL**
SUBJECT:	Agenda Approval - Additions, Deletions, Substitutions
BACKGROUND:	At each Board Meeting, Board Members approve the Agenda after each Supervisor is given the opportunity to suggest additions, deletions and/or substitutions to the Agenda.
FISCAL IMPACT:	None.
RECOMMENDATION:	If there are no changes to the Agenda, the Board is requested to approve agenda, as presented. If there are changes to the Agenda, the Board is requested to approve agenda, as amended.

ATTACHMENTS:

AGENDA ITEM NO. 6.1

INDIAN TRAIL
IMPROVEMENT DISTRICT
EST. 1957

Executive Summary

REGULAR MEETING BOARD OF SUPERVISORS

DATE:	January 15, 2025
SUBMITTED BY:	Scarlet Cantley
DEPARTMENT:	Administration
ITEM TYPE:	Presentation
AGENDA SECTION:	**PRESENTATIONS**
SUBJECT:	Update on Economy by Nate Eckloff with Piper & Sandler Co.
BACKGROUND:	
FISCAL IMPACT:	
RECOMMENDATION:	Presentation Only

ATTACHMENTS:

AGENDA ITEM NO. 6.2

INDIAN TRAIL
IMPROVEMENT DISTRICT
EST. 1957

Executive Summary

REGULAR MEETING BOARD OF SUPERVISORS

DATE:	January 15, 2025
SUBMITTED BY:	Scarlet Cantley
DEPARTMENT:	Administration
ITEM TYPE:	Presentation
AGENDA SECTION:	**PRESENTATIONS**
SUBJECT:	Presentation by Vice Mayor Sara Baxter on the State of the County, Roads Update, and ULDC
BACKGROUND:	
FISCAL IMPACT:	
RECOMMENDATION:	Presentation Only

ATTACHMENTS:

AGENDA ITEM NO. 6.3

INDIAN TRAIL
IMPROVEMENT DISTRICT
EST. 1957

Executive Summary

REGULAR MEETING BOARD OF SUPERVISORS

DATE:	January 15, 2025
SUBMITTED BY:	Heide Garcia
DEPARTMENT:	Administration
ITEM TYPE:	Presentation
AGENDA SECTION:	**PRESENTATIONS**
SUBJECT:	PBSO Update by Lieutenant Darla Sauers
BACKGROUND:	PBSO provides an update and addresses any concerns for the Board of Supervisors.
FISCAL IMPACT:	None for this item.
RECOMMENDATION:	No Action Required.

ATTACHMENTS:
PBSO Indian Trail Accident Report 12.01.24 - 12.15.24.pdf
PBSO Indian Trail Accident Report 12.16.24 - 12.31.24.pdf

Indian Trail Improvement District
Semi-Monthly Accident Report: December 1-15, 2024

INDIAN TRAIL
DISTRICT - DRAINAGE, PARKS & ROADS
Est. 1957

Traffic Stats

Signal Code	Signal Description	Total
3	Hit & Run	3
3U	Hit & Run with Unknown Injuries	0
3W	Hit & Run with Injuries	1
4	Motor Vehicle Crash	12
4D	Motor Vehicle Crash Dept. Vehicle Involved	0
4U	Motor Vehicle Crash with Unknown Injuries	0
4W	Motor Vehicle Crash with Injuries	3
5V	Vehicle Homicide	0
	Total	**19**

Accidents Summary

Case #	Signal	Cause of Collision	Medical Transportation
24123255	3	Improper backing	No
24124847	3	Followed too closely	No
24124861	3	Followed too closely	No
24122160	3W	Vehicle swerved to avoid an animal	No
24122230	4	Improper passing	No
24122391	4	Failed to yield right of way	No
24122834	4	Failed to yield right of way	No
24123430	4	Improper backing	No
24123563	4	Improper backing	No
24123859	4	Followed too closely	No
24124270	4	Operated motor vehicle in negligent manner	No
24124470	4	Improper passing	No

Data Source: TraCS

Cont. Accidents Summary

Case #	Signal	Cause of Collision	Medical Transportation
24124554	4	Followed too closely	No
24125071	4	Improper backing	No
24125713	4	Operated motor vehicle in negligent manner	No
24121850	4	Failed to yield the right of way	No
24121601	4W	Operated motor vehicle in negligent manner	Pedestrian transported by EMS to Palms West Hospital
24122996	4W	Followed too closely	Driver transported by EMS to Palms West Hospital
24125405	4W	Followed too closely	Driver transported by EMS to Palms West Hospital

Data Source: TraCS

Traffic Summary Map

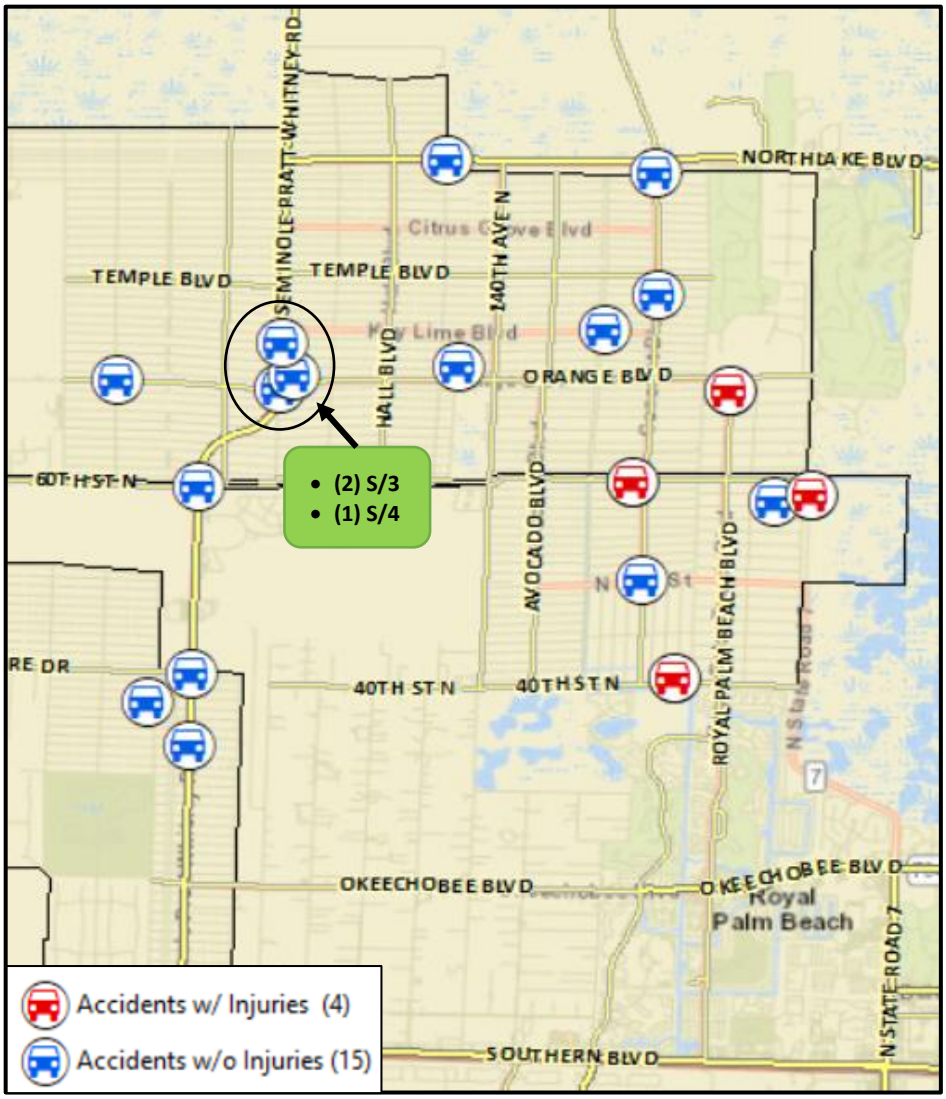

Indian Trail Improvement District
Semi-Monthly Accident Report: December 16-31, 2024

Traffic Stats

Signal Code	Signal Description	Total
3	Hit & Run	3
3U	Hit & Run with Unknown Injuries	0
3W	Hit & Run with Injuries	0
4	Motor Vehicle Crash	9
4D	Motor Vehicle Crash Dept. Vehicle Involved	1
4U	Motor Vehicle Crash with Unknown Injuries	2
4W	Motor Vehicle Crash with Injuries	4
5V	Vehicle Homicide	0
	Total	**19**

Accidents Summary

Case #	Signal	Cause of Collision	Medical Transportation
24126724	3	Vehicle veered off the roadway	No
24127386	3	Vehicle veered off the roadway	No
24128064	3	Improper backing	No
24125797	4	Over-steering when making a turn	No
24126469	4	Followed too closely	No
24127515	4	Driver did not stop for traffic	No
24127570	4	Failed to stop for a stationary vehicle	No
24127726	4	Failed to yield the right of way	No
24127943	4	Failed to yield the right of way	No
24129179	4	Improper backing	No
24129754	4	Followed too closely	Passenger transported by EMS to Palms West Hospital
24129867	4	Improper backing	No

Data Source: TraCS

Cont. Accidents Summary

Case #	Signal	Cause of Collision	Medical Transportation
24126363	4D	Improper backing	No
24126461	4U	Failed to yield the right of way	No
24126775	4U	Followed too closely	No
24127126	4W	Improper passing	Motorcyclist transported by EMS to Palms West Hospital
24127290	4W	Driver using a cell phone	No
24129324	4W	Driving too fast for conditions	No
24129550	4W	Failed to yield the right of way	Both drivers transported by EMS to Palms West Hospital and Wellington Hospital respectively

Data Source: TraCS

Traffic Summary Map

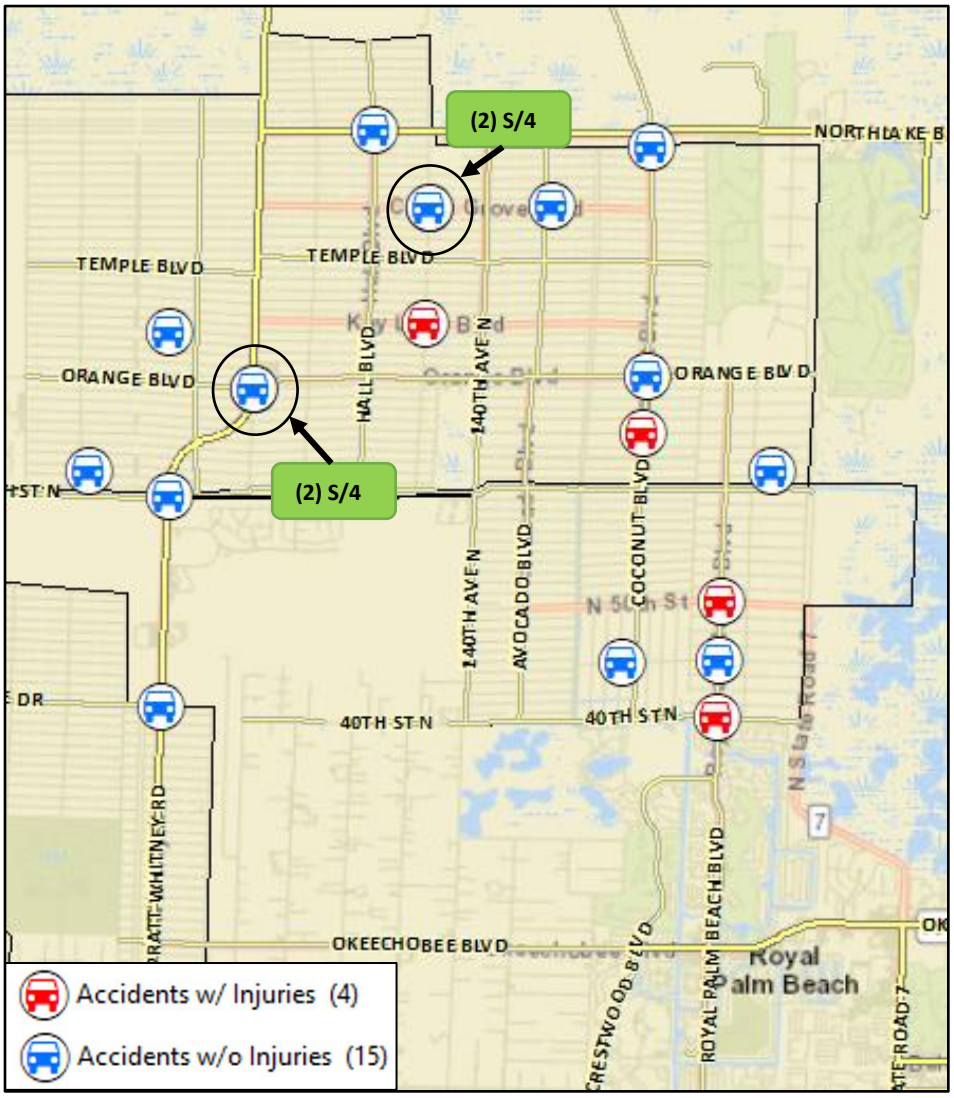

AGENDA ITEM NO. 6.4

INDIAN TRAIL
IMPROVEMENT DISTRICT
EST. 1957

Executive Summary

REGULAR MEETING BOARD OF SUPERVISORS

DATE:	January 15, 2025
SUBMITTED BY:	Heide Garcia
DEPARTMENT:	Administration
ITEM TYPE:	Presentation
AGENDA SECTION:	**PRESENTATIONS**
SUBJECT:	Fire Rescue Update - District Chief Amanda Vomero
BACKGROUND:	The Palm Beach Fire Rescue Department provides an update and addresses any concerns for the Board of Supervisors.
FISCAL IMPACT:	None.
RECOMMENDATION:	No Action Required.

ATTACHMENTS:
Indian Trails Response Time w Pie Chart - December 2024.pdf

1/8/2025

Palm Beach County Fire Rescue

Indian Trails

12/01/2024 to 12/31/2024

Average Response Times	Disp Hand	Turnout	Travel	Resp Time
Emergency Calls:	0:00:44	0:00:47	0:06:53	0:08:24

Type - Situation Dispatched	# of Incidents	%
Medical Calls:	217	77.50%
Vehicle Accidents:	21	7.50%
Alarms:	15	5.36%
Fires:	13	4.64%
Assists/Investigations:	9	3.21%
Hazardous Situations:	5	1.79%
Total	**280**	**100.00%**

Calls by Situation Dispatched

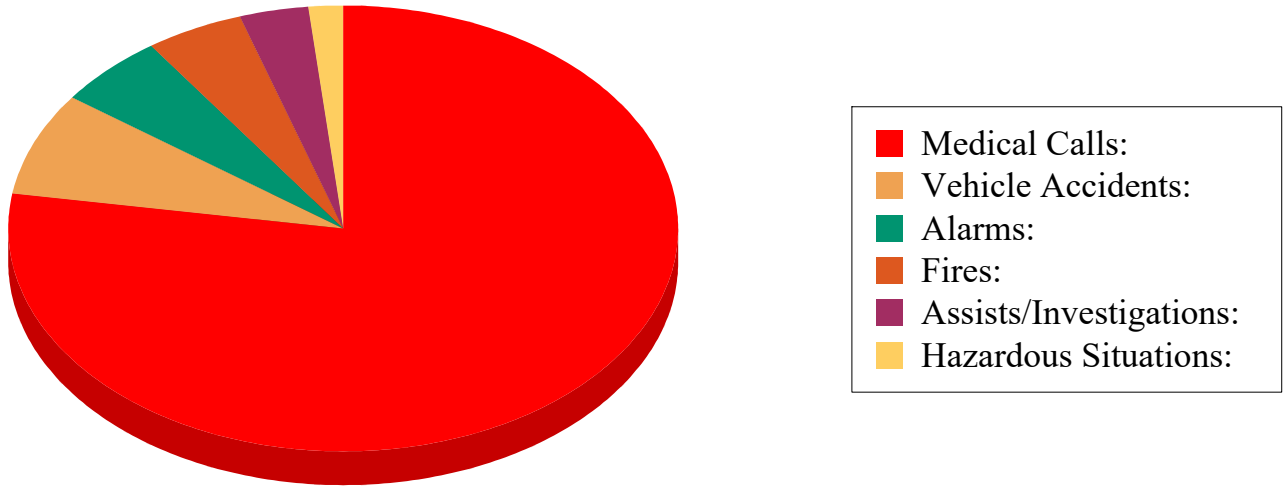

K:\CRYSTAL REPORTS\CAD\Monthly Reports-MANUAL\Municipal Response Time - Crystal Reports\Indian Trails Response Time w Pie Chart.rpt

AGENDA ITEM NO. 7.1

Executive Summary

REGULAR MEETING BOARD OF SUPERVISORS

DATE: January 15, 2025

SUBMITTED BY: Frank Palen

DEPARTMENT: Administration

ITEM TYPE: Contracts/Agreements/Leases

AGENDA SECTION: **REGULAR AGENDA**

SUBJECT: Consider: (1) **Amended and Restated Drainage Service Agreement** with D. R. Horton, Inc., as Successor-in-Interest to Northlake 20, LLC, (2) **Partial Release of Easement**; and (3) **Petition of D. R. Horton, Inc. to Initiate Unit Activation Process for Vintage Oaks Planned Unit of Development**, 1594 & 11690 Northlake Blvd, City of Palm Beach Gardens, Florida

BACKGROUND: **THE PROPERTY:** Vintage Oaks PUD is a ±17.89-acre parcel of land located on the South side of Northlake Boulevard between Bay Hill Drive and 112th Terrace North in the City of Palm Beach Gardens. **See attached Vicinity Sketch.**

BACKGROUND: In 2007, ITID executed a Drainage Service [and Unit Formation] Agreement with the former owner, Northlake 20, LLC. At the time, the Property was located in the legislative boundaries of Northern Palm Beach County Improvement District (NPBCID) and in unincorporated Palm Beach County and lacked access to drainage. The Northlake 20 was unable to obtain drainage from NBCID and approached ITID as an alternative. ITID had (and has) no direct drainage connections to the property, but the Northlake 20 proposed a separate contractual agreement with Bay Hill Estates POA to route Project drainage to the west through that development. This indirect route through Bay Hill would eventually drain

south into ITID's M-1 Basin. As a condition of service, Northlake 20 assumed he full cost of an application to the Florida Legislature to annex the property into ITID's Legislative Boundary and de-annex from NPBCID's.

The Board of Supervisors approved this arrangement and executed the attached Agreement, which as recorded in the Public Record. Among other matters, the Agreement also committed Northlake 20 to form a Unit of Development for the Property before any drainage services would be provided. Palm Beach County subsequently approved ±43,000 sf of professional office space for a portion of the site, but the Project was (presumably) caught in the Great Recession of 2008-2009, and never commenced. **However, the Drainage Service Agreement was not terminated and, because it was recorded in the Public Records, it encumbers the entire property, technically creating in form a District interest similar to an "easement".**

NEW OWNER/NEW PROJECT: Circumstances regarding development of the property have substantially changed over the past 17 years. The Property has now been annexed into the City of Palm Beach Gardens, whose development regulations now replace those of Palm Beach County. The Former Owner sold the property to D. R. Horton, Inc. ("Horton"), a residential developer. In September 2023, the City approved a planned unit development (PUD) consisting of 111 townhouses with supporting amenities. A Plat for Horton's "Vintage Oaks" Planned Unit Development was recorded on May 2, 2024 in PBC Plat Book 137, Pages 132-137, and site development has commenced.

PROPOSED DRAINAGE SYSTEM: The **concept** for the Vintage Oaks Project's drainage system remains unchanged. As in 2007, Project drainage will consist of a combination of on-site retention with off-site discharge of excess indirectly routed to the District's M-1 Basin through a third-party's system. However, rather than through Bay Hill Estates, the excess drainage will be routed through the drainage system created by Palm Beach County to service Northlake Boulevard. The County disposes of this drainage by routing it by District permit to ITID's M-1 Basin (see attached sketch).

SOURCE OF THIS REQUEST: Horton's petition originally was

generated in response to concerns raised by Palm Beach County regarding the possible effect the recorded 2007 Agreement might have on certain real property interests it will acquire or seeks in Vintage Oaks. The City's development order requires Horton to accommodate Palm Beach County's plans to construct Northlake Boulevard. This includes conveying an east-bound turn-lane into the Project and an easement to construct a pedestrian pathway along the north side of the property. The turn lane parcel (0.016 acres) will be conveyed in fee to Palm Beach County. In addition, Horton will convey to the County an easement for a continuous, public sidewalk/pedestrian pathway that will meander along the north side of the property, parallel to Northlake Blvd. This is part of a larger “parkway” system being created in or adjacent to the Northlake Right-of-Way in the City.

Before Horton can comply with the conditions of approval, the County required Horton to obtain the District's release of its interest in the 2007 Agreement, ***but only within the turn-lane parcel and within the north 30 feet of Vintage Oaks***. This “partial release area” corresponds to a 30' wide utility easement shown on the Plat of Vintage Oaks (see plat extract, attached). The land under the 30' easement will be conveyed to and owned in fee by the Vintage Oaks Homeowners Association. Until a partial release of the District's interest is received, the County will not approve the City's release of required development permits for Vintage Oaks.

EFFECT OF THE PROPOSED AMENDMENT/RESTATEMENT AND PARTIAL RELEASE: Because it is recorded, (as intended) the 2007 Agreement constitutes a legal "encumbrance" on the property to ITID’s benefit. While Northlake 20’s original development plan did not contemplate any on-site District Works requiring land to be set aside, the principal purpose of recording was to assure that the landowner (**and its successors)** honored the commitment to form a unit of development prior to connection of Project drainage to ITID's system. This Amendment/Restatement of the 2007 Agreement preserves that purpose.

The Partial Release of the District's encumbrance on the north 30' of the property in which Palm Beach County will acquire an interest does not affect the Landowner’s commitments in any substantial way. All relevant terms and conditions of the 2007 Agreement remain in full force and effect, including Unit Formation. The Agreement is being amended in several ways to bring it into conformity with current District policies and procedures, including payment of required fees and reimbursement of costs.

The Recitals in the Amendment/Restatement make it clear that all drainage from the 30'-wide Release Area will be included in the Project's overall drainage calculations for the Unit's Water Control Plan. Upon creation of the Unit of Development, Project landowners will receive an assessment for their pro-rata share of the costs of providing drainage to the Property. These costs have yet to be calculated. The only portion of the Property not to be included in the Unit (and not to be assessed) will be the 0.016-acre County Turn Lane Parcel (Tract R-2).

As successor to Northlake 20, Horton (through its representatives) has confirmed these understandings.

DISPOSITION OF "SURPLUS" DISTRICT PROPERTY. The request for Partial Abandonment of encumbrance raises a technical issue of compliance with District Policies. While the 2007 Drainage Service Agreement is not technically an "easement" or an “ownership” interest, it does constitute an "interest in real property" that benefits ITID. Partial abandonment of the District's interest in the 2007 Agreement is a form of "disposition". Board Policy (adopted 11-18-15; copy attached) requires the Board to find that disposition of any real property interest is **"surplus"** -- meaning that it "is not presently or foreseeably necessary or convenient to carry out the purposes and functions of the District". In making its decision, the Policy requires the Board to consider the evaluation of the District Engineer. After a review, the District Engineer has evaluated the request for Partial Abandonment and concluded that, in his opinion, the property interest is “surplus” (see attached opinion, dated 10-04-24). ***If this request is approved by the Board, the decision will incorporate this finding.***

FISCAL IMPACT:

Amendment and Restatement and Partial Abandonment of the 2007 Agreement will not have a fiscal impact. The District's "interest" in the property in itself has no financial value. Its "value" lies in the incentive imposed on the landowner's commitment to form a Unit of Development. This commitment is being honored by the successor landowner, D. R. Horton, Inc. Costs of recording the instrument will be borne by the Landowner. Horton will reimburse the District for professional review fees and costs incurred in reviewing this application. A one-time Drainage Connection fee of **$98,766.00** will be due prior to receipt of a District permit.

The direction to initiate a Unit of Development for the Property does have direct fiscal impact. Costs and fees associated with the Unit Formation Process will be paid by the landowner, with an initial fee of $15,000 due upon the Board's approval of this application. Formal direction to the District Engineer will proceed to prepare the Water Control Plan in compliance with Chapter 298, Fla. Stat., will appear on the next available Board Meeting agenda.

RECOMMENDATION:

(1) MOTION TO APPROVE:
Amended and Restated Drainage Service Agreement with D. R. Horton, Inc., as Successor-in-Interest to Northlake 20, LLC; and
Partial Release of Easement (including Disposition of an Interest in Surplus Real Property); and
(2) BOARD DIRECTION:
Direct Staff to Initiate Unit Activation Process for Vintage Oaks Planned Unit of Development, 11594 & 11690 Northlake Blvd, City of Palm Beach Gardens, Florida, based on Landowner Petition.

ATTACHMENTS:

24-1213 1st Amend Restd to LO Agmt Northlake 20_Vintage Oaks CLEAN.pdf
24-1213 ITID to DR Horton Vintage Oaks Partial Release of Esmt.pdf
24-1008_Vintage Oaks-1st Amend GRAPHIC ILLUSTRATION.pdf
24-1008_Vintage Oaks-Proposed Drainage Path GRAPHIC.pdf
24-0925 Vintage Oaks_ITID_Letter of Authorization Unit Activation.pdf
07-1107 ITID Northlake 20 Drainage Svc SAgmt ORB 22269 P 1465.pdf
EXTRACT Plat Vintage Oaks PB 137 Pp 132 134 135.pdf
2015_1118_BOS Dispostion of Surplus Real Property.pdf
24-1004 Opinion of Engineer Vintage Oaks Release Surplus Property.pdf
24-1213 1st Amend Restd to LO Agmt Northlake 20_Vintage Oaks REDLINE.pdf

Prepared by and Return To:
Frank S. Palen, Esquire
Caldwell Pacetti Edwards Schoech & Viator LLP
1555 Palm Beach Lakes Boulevard, Suite 1200
West Palm Beach , Florida 3301

Property Control №: 52-41-42-14-14-015-0000

AMENDED AND RESTATED DRAINAGE SERVICE AGREEMENT BETWEEN INDIAN TRAIL IMPROVEMENT DISTRICT AND D.R. HORTON, INC., AS SUCCESSOR-IN-INTEREST TO NORTHLAKE 20, LLC

THIS AMENDED AND RESTATED AGREEMENT (hereafter, alternatively the "Drainage Service Agreement" or the "Agreement") shall be effective as of the _____day of _____, 2024, and is being entered into by and between the **INDIAN TRAIL IMPROVEMENT DISTRICT**, an independent special district of the State of Florida, whose address is 13476 61st Street North, West Palm Beach, Florida 33412 (hereafter referred to as "District"), and **D. R. HORTON, INC**., a Delaware corporation registered to do business in the State of Florida, and successor-in-interest to Northlake 20, LLC, whose address is 6123 Lyons Road, Coconut Creek, Florida 33073 (hereafter referred to as "Landowner"). District and Landowner may hereafter be referred to collectively as the "Parties").

W I T N E S S E T H:

WHEREAS, District is an independent special district created and operating in accordance with the provisions of Chapter 2002-330, Laws of Florida, as amended, and applicable provisions of Chapter 298, Florida Statutes (together the "Act"); and

WHEREAS, District is empowered by the Act to form Units of Development within its boundaries for the purpose of implementing, constructing, operating and maintaining drainage systems, water management facilities and other public improvements; and

WHEREAS, Landowner is a Delaware corporation registered to do business in the State of Florida; and

WHEREAS, on November 7, 2007, District and Northlake 20, LLC, executed a certain "Drainage Service Agreement" for the property described in the attached **Exhibit "A"** (the "Property"), which was recorded on November 20, 2007 in Official Records Book 22269, Page 1465, of the Public Records of Palm Beach County, Florida, 100% of which Property has been acquired and is now owned entirely by Landowner; and

WHEREAS, while Northlake 20 LLC partially satisfied the requirements of the Drainage Agreement by causing the Property to be annexed into District's legislative boundaries for the purpose of providing drainage and other services, the professional office project originally

proposed for the site did not proceed and the Property remained undeveloped until being acquired by Landowner; and

WHEREAS, among the commitments made in the Drainage Service Agreement by Northlake 20, LLC was the commitment to form a Unit of Development for the Property, upon which the District continues to rely; and

WHEREAS, Landowner acquired the Property from Northlake 20, LLC, subject to the terms of the Drainage Service Agreement, and has caused the Property to be annexed into the City of Palm Beach Gardens, which approved a revised development plan as a multi-family residential project styled "Vintage Oaks"; and

WHEREAS, in order to develop the Property as planned, Landowner requires an outlet for the Property's surface water management system by way of an indirect outfall connection (the "Connection") to District's Water Management System via Palm Beach County's surface water management system for Northlake Boulevard; and

WHEREAS, District is prepared to accommodate the proposed Connection and to provide perpetual drainage services to the Property subject to the terms and provisions of this Agreement and its adopted Drainage Policies and Procedures; and

WHEREAS, after such a long period of dormancy, the terms of the Drainage Service Agreement must be adjusted to accommodate Landowner's revised development plan and to reflect certain changes in District policies and procedures during the intervening years; and

WHEREAS, except as otherwise expressly agreed in this First Amendment, the terms of the Drainage Service Agreement shall remain in full force and effect, including but not limited to the Landowner's commitment to form a Unit of Development within the District.

NOW, THEREFORE, FOR VALUABLE CONSIDERATION, the receipt, sufficiency and reaffirmation of which are hereby acknowledged, the Parties agree as follows:

ARTICLE 1. RECITALS.

The above recitals are hereby true and correct to best of the knowledge of the parties hereto and are incorporated herein by this reference.

ARTICLE 2. AUTHORITY FOR AGREEMENT.

Each party to this Agreement hereby acknowledges and agrees that they and their respective undersigned representatives have the lawful authority to execute and enter into this Agreement for the purposes reflected herein.

ARTICLE 3. DISTRICT'S UNDERSTANDINGS.

(a) **Permit Issuance.** Subject to Landowner's satisfaction and compliance with the requirements and provisions of this Agreement, District shall issue the hereafter identified Permit for the installation of a Connection from the Property to the Indian Trail Water Management System via the drainage system operated by Palm Beach County for Northlake Boulevard.

(b) **Partial Release of Surplus District Encumbrance in the Property.** In order to allow Landowner to satisfy certain conditions of zoning approval, District agrees to partially release a 30-foot-wide strip along the north boundary of the Property described in the attached **Exhibit "A"** (the "Release Area") from the encumbrance of the "Drainage Service Agreement". A legal description the Release Area is contained in the form of a Partial Release is attached hereto as **Exhibit "B".** In consideration of this partial release, however, it is understood by the Parties that all surface water drainage from the Release Area shall be included in calculation of the Property's overall drainage for the Unit of Development's Water Control Plan.

ARTICLE 4. LANDOWNER'S UNDERSTANDINGS.

(a) [CONDITION SATISFIED]

(b) It is the intent of the parties that the Property should become an active Unit of Development within the District. Landowner has in writing affirmed its intent to initiate and diligently pursue formation of a Unit of Development. The process of forming a Unit of Development is outlined in the attached **Exhibit "C".**

(c) The District shall, at Landowner's expense, initiate any changes to the District's Water Control Plans necessitated by this Agreement or by the addition of Landowner's Property to the District.

(d) Unless otherwise expressly agreed herein, this Agreement provides only for a Connection from the Property to the Indian Trail Water Management System and provision of continuing water management services by the District. The District does not hereby assume responsibility for maintenance of any water management systems or functions internal to the Property.

(e) Any and all costs and expenses of the District to effectuate this Agreement which are to be borne by the Landowner, shall be reasonable and customary.

(f) All surface water drainage from the thirty-foot wide (30) area of the Property to be partially released from the encumbrance recorded on November 20, 2007 in Official Records Book 22269, Page 1465, of the Public Records of Palm Beach County, Florida, shall be included in calculation of the Project's overall drainage for the Unit of Development Water Control Plan.

ARTICLE 5. <u>CONNECTION APPROVAL, CONSTRUCTION AND MAINTENANCE</u>.

The Landowner shall be required to satisfy and comply with the following conditions and obligations as related to the approval, construction, operation and maintenance of the Connection and any affected District's works or facilities, namely:

(a) The Landowner shall be solely responsible for the proper and timely design, construction, installation, and subsequent maintenance of the Connection without recourse to the District.

(b) On or before ninety (90) calendar days prior to commencement of installation of the Connection, the Landowner shall submit, on its own behalf, a properly completed and executed special permit application to the District, with accompanying signed and sealed plans and specifications for the proposed Connection, which permit application, if and when approved by the District, shall be the herein referenced "Permit". At a minimum, the District Permit shall contain the conditions set forth on attached **Exhibit "D**".

(c) The proposed Connection and its intended use must satisfy and comply with all other governmental agencies' rules, regulations and permit requirements.

(d) The Connection shall not be installed until: (1) the District has approved and issued the Permit authorizing such Connection to the District Water Management System; (2) Landowner has paid in full the fees and charges due pursuant to Article 6, below; and (3) all other required governmental approvals and permits have been issued for the Connection and copies of same provided to the District. The Landowner shall use commercially reasonable efforts to obtain an amendment by Palm Beach County of its District drainage permit for Northlake Boulevard.

(e) Following installation of the Connection, the Landowner shall thereafter be responsible for all costs and expenses as may be necessary for its continued proper operation, repair and maintenance.

(f) The Landowner shall be responsible for payment of any costs that may be reasonably and necessarily incurred by the District for such design, permitting and/or construction of modifications to the District's Water Management System that must be carried out in order to allow for the installation of the Connection. These District costs and expenses may include but are not limited to such legal, administrative, surveying and engineering costs and expenses as may be incurred by the District in conjunction with such activity. They shall be paid within thirty (30) calendar days of the issuance by the District of a written invoice for payment of same to the Landowner.

(g) Landowner shall satisfy the District's Surface Water Management Policy, as it may be amended from time to time.

(h) The Landowner understands that a readjustment or assessment of benefits as required by Section 298.55, Florida Statutes, as amended, may occur with regard to the Property.

ARTICLE 6. FEES AND CHARGES.

The Landowner shall be obligated to pay to the District the following fees and charges, namely:

(a) A non-refundable, lump sum reimbursement of such reasonable administrative, engineering and legal expenses as have been or will be incurred by the District for the preparation of this Agreement, payable within sixty (60) days of Landowner's execution of this Agreement.

(b) An Initial Advance in the amount of **FIFTEEN THOUSAND AND NO/100 DOLLARS ($15,000.00)**, payable at the time of Landowner's execution of this Agreement, which Initial Advance shall be applied to and used by the District for the expenses incurred pursuant to the requirements of Article 4, above. Subsequent costs shall be invoiced to the Landowner on a monthly basis as they accrue.

(c) A one-time, non-refundable Drainage Connection Fee in the amount of **SIX THOUSAND AND NO/100 DOLLARS** ($6,000.00) per gross acre of the Property. The Connection Fee shall be the total sum of **NINETY-EIGHT THOUSAND SEVEN HUNDRED SIXTY-SIX AND NO/100 DOLLARS ($**98,766.00**)** (16.461 acres x $6,000 = $98,766), payable prior to the issuance of the District's Permit.

(e) All fees and charges at standard rate(s) that the District imposes for similar permit application submittal, reviews and processing.

ARTICLE 7. REQUIRED DISCLOSURES. Prior to its conveying, selling, transferring or leasing any interest in the Property, Landowner shall prepare and submit to District for approval the following disclosure statement(s).

(a) One disclosure statement must be in form substantially as follows:

"INDIAN TRAIL IMPROVEMENT DISTRICT IMPOSES ASSESSMENTS ON THIS PROPERTY THROUGH A SPECIAL TAXING DISTRICT. THESE ASSESSMENTS PAY THE CONSTRUCTION, OPERATION, AND MAINTENANCE COSTS OF CERTAIN PUBLIC FACILITIES OF THE DISTRICT AND ARE SET ANNUALLY BY THE GOVERNING BOARD OF THE DISTRICT. THESE ASSESSMENTS ARE IN ADDITION TO COUNTY AND ALL OTHER TAXES AND ASSESSMENTS PROVIDED FOR BY LAW."

This disclosure statement shall be prominently displayed and contained in all: (i) **purchase contracts** with prospective buyers by means of a separate paragraph in the Real Estate Contract immediately above the signature line for the purchaser, which paragraph must be in capital letters, bold-face type, and (ii) **contracts for leases** of real property within the Unit.

(b) Another similar disclosure statement shall appear in the applicable **homeowner's and/or property owner association documents**, including a Declaration of Covenants, if any. District shall be entitled to receive and Landowner agrees to provide to District such verification of the provision of the disclosure statement as the District deems necessary and appropriate, but in any event the disclosure statement shall, at a minimum, disclose the following: (i) that the Property is located within a District Unit of Development; (ii) the general nature and scope of Water Control Plan Improvements benefitting the property; (iii) District's involvement in the construction, financing, operation and/or maintenance of the Water Control Plan Improvements; (iv) that District will annually levy and collect Drainage Taxes upon the Property; (v) that these Drainage Taxes will be included in the Palm Beach County Tax Collector's annual Unified Real Property Tax Bill and collected by the Tax Collector; and (vi) if known, the approximate annual amount of the Drainage Taxes anticipated to be levied and assessed by the District upon the subject Property.

(c) Landowner acknowledges and consents to District's recording in the Public Record of Palm Beach County:

(1) A Notice and Disclosure of Taxing Authority statement which shall be generally in the format attached as **Exhibit "E"**; and

(2) (i) The Report of Engineer, including subsequent amendments thereto, if any, as are approved for the Unit; (ii) such Drainage Tax resolutions as may be adopted by District for the Unit; (iii) estimated annual non-ad valorem assessment notices; (iv) maintenance agreements; or (v) in the alternative, a memorandum referencing said instruments, which may include a general summary of the contents contained therein, plus their location and availability.

ARTICLE 8. <u>DEFAULT REMEDIES.</u>

(a) In the event the Landowner should fail to timely comply with the terms, obligations and provisions of this Agreement, then in that event the District may, if it so elects, terminate this Agreement following the provisions of thirty (30) calendar days advanced written notice of such intent to terminate which notice shall reflect the nature of the basis for termination. During said thirty (30) day calendar period, the Landowner shall have the right to cure the item or items that are the basis for the District's issuance of the notice of termination.

(b) In the event the Landowner should fail to pay the Fees and Charges identified in Article 6 ("Fees and Charges"), including an Annual Access Fee, required by the terms and provisions of this Agreement, the District shall be entitled, in addition to all other available legal remedies, to the following cumulative and non-exclusive remedies and/or damages:

(1) To impose and collect simple interest at the rate of 18% per annum on the unpaid balance of any outstanding Fees and Charges, with said interest to commence to accrue on the day immediately following the due date.

(2) Following provision of 30 calendar days advance written notice to the Landowner (during which time any unpaid Fees and Charges may be paid in order to cure the default), to: (i) terminate this Agreement and discontinue the Connection to the Indian Trail Water Management System, or (ii) initiate such legal action as it deems necessary and appropriate to compel payment of the unpaid Fees and Charges, plus accrued interest and/or compliance with the terms and provisions of this Agreement. Any unpaid Fees and Charges, plus accrued interest, shall survive the termination of this Agreement and may be reduced to a judgment.

ARTICLE 9. TERM; TERMINATION.

Unless otherwise terminated as authorized in this Agreement, this Agreement shall continue for a term of ninety-nine (99) years from its Effective Date. Notwithstanding the foregoing, Landowner may terminate this Agreement for any reason with thirty (30) days prior notice to the District; provided, however, if as of the termination date there are any outstanding the District claims or invoiced Annual Access Fees, then in that event the enforcement provisions of the Agreement shall survive such termination

ARTICLE 10. MISCELLANEOUS PROVISIONS.

(a) **Notice**. All notices, amendments, requests, consents and other communications required or permitted under this Agreement shall be in writing (which shall include facsimile communications provided facsimile machine written confirmation of sending and delivery is obtained), hand delivered by prepaid express courier or messenger service, or mailed by registered or certificated mail (postage prepaid), return receipt requested, to the following addresses:

As to the District: **INDIAN TRAIL DISTRICT IMPROVEMENT DISTRICT**
13476 61st Street North
West Palm Beach, Florida 33412
Attn: Executive Director
Telephone: (561) 793-0874
Facsimile: (561) 793-3716
E-Mail: bhanson@indiantrail.com

As to Landowner: **D. R. HORTON, INC.**
6123 Lyons Road
Coconut Creek, FL 33073
Attn: Rafael Roca, Division President
Telephone: (954) 949-3015
Fax: (817) 928-6179
Email: rroca@drhorton.com

(b) **Entire Agreement**. This Agreement constitutes the entire understanding and agreement between the parties with respect to the subject matter hereof and shall be a covenant running with the Property herein described.

(c) **Binding Effect**. All of the terms and provisions of this Agreement, whether so expressed or not, shall be binding upon, inure to the benefit of, and be enforceable by the parties and their respective legal representatives, grantees, successors, and permitted assigns.

(d) **Assignability**. Except as otherwise authorized in the Agreement, the Agreement or any its obligations may not be assigned without the prior written consent of both parties to this Agreement, which consent shall not be unreasonably withheld.

(e) **Severability**. If any part of this Agreement is contrary to, prohibited by or deemed invalid under applicable law or regulation, such provision shall be inapplicable and deemed omitted to the extent so contrary, prohibited or invalid, but the remainder hereof shall not be invalidated thereby and shall be given full force and effect so far as possible.

(f) **Governing Law and Venue**. This Agreement and all transactions contemplated by this Agreement shall be governed by, and construed and enforced in accordance with, the laws of the State of Florida without regard to any contrary conflicts of law principle. Venue of all proceedings in connection herewith shall lie exclusively in the Fifteenth Judicial Circuit in and for Palm Beach County, Florida, and each party hereby waives whatever its respective rights may have been in the selection of venue.

(g) **Non-Jury Trial**. The parties hereby waive any rights any of them may have to a jury trial in any litigation arising out of or related to this Agreement and agree that they shall not elect a trial by jury. The parties hereto have separately, knowingly and voluntarily given this waiver of right to trial by jury with the benefit of competent legal counsel.

(h) **Headings**. The headings contained in this Agreement are for convenience of reference only, and shall not limit or otherwise affect in any way the meaning or interpretation of this Agreement.

(i) **Effective Date**. The Effective Date of this Agreement shall be as of the last date of its signing by both of the parties hereto.

(j) **Enforcement of Remedies**. The failure of any party to insist on the strict performance of any of the terms and conditions hereof shall be deemed a waiver of the rights to remedies that the party may have regarding that specific instance only, and shall not be deemed a waiver of any subsequent breach or default in any terms or conditions.

(k) **Construction**. The parties acknowledge that each has shared equally in the drafting and preparation of this Agreement and, accordingly, no Court or Administrative Hearing Officer construing this Agreement shall construe it more strictly against one party than the other and every

covenant, term and provision of this Agreement shall be construed simply according to its fair meaning.

(l) **Attorney's Fees**. It is hereby understood and agreed that in the event any lawsuit in the judicial system, federal or state, is brought to enforce compliance with this Agreement or interpret same, or if any administrative proceeding is brought for the same purposes, each party to said action shall be responsible for its own attorney's fees and costs, including appellate fees and costs.

(m) **Recording**. This Agreement shall be recorded in the public records of Palm Beach County, Florida

(n) **Counterparts**. This Agreement may be executed in one or more counterparts, each of which shall be deemed an original, but all of which together shall constitute the same instrument.

SIGNATURES BEGIN ON FOLLOWING PAGE

IN WITNESS WHEREOF, the parties have executed this Agreement on the dates hereafter written.

Executed by the **DISTRICT** this _____ day of _____, 2024 .

ATTEST:

By:_____

Secretary

INDIAN TRAIL IMPROVEMENT DISTRICT, an independent special district of the State of Florida

By:_____

President, Board of Supervisors

STATE OF FLORIDA)
) SS:
COUNTY OF _____)

The foregoing instrument was acknowledged before me by means of ☐ physical presence or ☐ online notarization, this _____day of _____, 2024, by _____, as President of the Board of Supervisors of Indian Trail Improvement District, an independent special district of the State of Florida, who is ____ personally known to me or who has produced _____ as identification.

[Notary Seal]

_____
Notary Public, State of Florida

_____
Printed Name of Notary Public
My Commission expires:

Executed by **LANDOWNER** this _____ day of _____, 20__.

D.R. HORTON, INC., a Delaware corporation

By:_____
Rafael J. Roca, Vice President

STATE OF FLORIDA)
) SS:
COUNTY OF _____)

The foregoing instrument was acknowledged before me by means of ☐ physical presence or ☐ online notarization, this ___ day of _____, 2024, by Rafael J. Roca, as Vice President of D. R. Horton, Inc., a Delaware corporation, who is _____ personally known to me or who has produced _____ as identification.

[Notary Seal]

_____
Notary Public, State of Florida

_____
Printed Name of Notary Public
My Commission expires:

EXHIBIT "A"

LEGAL DESCRIPTION OF THE PROPERTY

THAT PORTION OF THE WEST ONE-HALF OF THE EAST ONE-HALF OF SECTION 14, TOWNSHIP 42 SOUTH, RANGE 41 WEST, PALM BEACH COUNTY, FLORIDA LYING SOUTH OF THE RIGHT-OF-WAY FOR WEST LAKE PARK ROAD (N/K/A/ NORTHLAKE BOULEVARD), LESS ADDITIONAL RIGHT-OF-WAY FOR NORTHLAKE BOULEVARD, AS DESCRIBED IN THAT CERTAIN ORDER OF TAKING RECORDED IN OFFICIAL RECORDS BOOK 12173, PAGE 5, OF THE PUBLIC RECORDS OF PALM BEACH COUNTY, FLORIDA.

(OVERALL AREA OF PROPERTY SURVEYED IS 17.893 ACRES, MORE OR LESS. AREA OF INCLUDED OVERLAP AREA IS 1.432 ACRES, MORE OR LESS.);

LESS AND EXCEPT,

Road Tract R-2, as shown on the Plat of Vintage Oaks T1, as recorded on May 2, 2024 in Plat Book 137, Page 132 of the Official Records of Palm Beach County, Florida.

EXHIBIT "B"
FORM OF PARTIAL RELEASE

Prepared by and
After recording, return to:
K. Michelle Jessell, Esquire
Nelson Mullins Riley & Scarborough LLP
1905 NW Corporate Blvd, Suite 310
Boca Raton, FL 33431

PARTIAL RELEASE OF DRAINAGE SERVICE AGREEMENT
BETWEEN INDIAN TRAIL IMPROVEMENT DISTRICT
AND NORTHLAKE 20, LLC
(Tract R-2 and Utility Easement, Vintage Oaks T1 Plat)

THIS PARTIAL RELEASE OF DRAINAGE SERVICE AGREEMENT BETWEEN INDIAN TRAIL IMPROVEMENT DISTRICT AND NORTHLAKE 20, LLC (this "Partial Release"), is made as of September ___, 2024, by Indian Trail Improvement District, an independent special district of the State of Florida (the "District") and D.R. Horton, Inc., a Delaware corporation ("DHI"), as Successor-in-Interest to Northlake 20, LLC.

RECITALS:

WHEREAS, the District and Northlake 20, LLC, a Florida limited liability company, entered into a Drainage Service Agreement for the property described in Exhibit "A" (the "Property"), dated November 7, 2007 and recorded on November 20, 2007 in Official Records Book 22269, Page 1465, of the Public Records of Palm Beach County, Florida (the "Drainage Agreement").

WHEREAS, DHI is the current owner of the Property, and DHI is conveying a portion of the Property to Palm Beach County for road right-of-way and granting a easement to Palm Beach County for a sidewalk as more particularly described in Exhibit "B" attached hereto (the "Released Property"); and

WHEREAS, it is the intention of the District and DHI that the Released Property no longer be subject to the Drainage Agreement.

NOW THEREFORE, FOR VALUABLE CONSIDERATION, the receipt and sufficiency of which are hereby acknowledged, the District and DHI do hereby release and forever discharge the Released Property from the operation of the Drainage Agreement.

IT IS UNDERSTOOD AND AGREED that the Drainage Agreement shall otherwise remain in full force and effect.

WITNESS the execution of this Partial Release by the undersigned is made as of the date first above written.

ATTEST:

By:_____

Secretary

INDIAN TRAIL IMPROVEMENT DISTRICT, an independent special district of the State of Florida

By:_____

President, Board of Supervisors

STATE OF FLORIDA)
) SS:
COUNTY OF _____)

The foregoing instrument was acknowledged before me by means of ☐ physical presence or ☐ online notarization, this ___ day of_____, 20___, by _____, as President of the Board of Supervisors of Indian Trial Improvement District, an independent special district of the State of Florida, who is personally known to me or who has produced _____ as identification.

_____
Notary Public, State of Florida

_____
Printed Name of Notary Public
My Commission expires:

DHI:

D. R. HORTON, INC., a Delaware corporation

By:_____
Rafael J. Roca, Vice President

STATE OF FLORIDA)
) SS:
COUNTY OF _____)

The foregoing instrument was acknowledged before me by means of ☐ physical presence or ☐ online notarization, this ___ day of _____, 20_____, by Rafael J. Roca, as Vice President of D.R. Horton, Inc., a Delaware corporation, who is personally known to me or who has produced _____ as identification.

_____
Notary Public, State of Florida

_____
Printed Name of Notary Public
My Commission expires:

EXHIBIT "A"

LEGAL DESCRIPTION OF THE PROPERTY

THAT PORTION OF THE WEST ONE-HALF (W1/2) OF THE EAST ONE-HALF (E1/2) OF SECTION 14, TOWNSHIP 42 SOUTH, RANGE 41 EAST, PALM BEACH COUNTY, FLORIDA, LYING SOUTH OF THE RIGHT-OF-WAY FOR WEST LAKE PARK ROAD (N/K/A NORTHLAKE BLVD), LESS ADDITIONAL RIGHT-OF-WAY FOR NORTHLAKE BLVD AS DESCRIBED IN THAT CERTAIN ORDER OF TAKING RECORDED IN OFFICIAL RECORDS BOOK 12173, PAGE 5, OF THE PUBLIC RECORDS OF PALM BEACH COUNTY, FLORIDA.

EXHIBIT "B"
THE RELEASED PROPERTY

TRACT R-2, VINTAGE OAKS TI, ACCORDING TO THE PLAT THEREOF, AS RECORDED IN PLAT BOOK 137, PAGE 132, OF THE PUBLIC RECORDS OF PALM BEACH COUNTY, FLORIDA.

THE THIRTY FOOT UTILITY EASEMENT LOCATED WITHIN TRACT OS-1, VINTAGE OAKS T1, ACCORDING TO THE PLAT THEREOF, AS RECORDED IN BOOK 137, PAGE 132, OF THE PUBLIC RECORDS OF PALM BEACH COUNTY, FLORIDA.

EXHIBIT "C"

PROCESS TO FORM A UNIT OF DEVELOPMENT

CALDWELL PACETTI
EDWARDS SCHOECH & VIATOR LLP

ATTORNEYS AT LAW

MANLEY P. CALDWELL, JR.
KENNETH W. EDWARDS
CHARLES F. SCHOECH
MARY M. VIATOR
FRANK S. PALEN
JAMES L. WATT
JOHN A. WEIG
MARGARET E. WOOD

OF COUNSEL
BETSY S. BURDEN

ONE CLEARLAKE CENTRE
250 SOUTH AUSTRALIAN AVENUE
SUITE 600
WEST PALM BEACH, FLORIDA 33401

PARALEGALS
MARY T. ADDONA
EMILIE PEARSON, CP

www.caldwellpacetti.com

TELEPHONE: (561) 655-0620
TELECOPIER: (561) 655-3775

MEMORANDUM

SUBJECT: Procedures to Form a Unit of Development, Approval of a Water Control Plan

---

The District is required to comply with the following procedures to construct a Water Control Plan for the District. This would involve the creation of a separate Unit of Development. The District would be required to go through the Water Control Plan approval process in accordance with Section 298.301, F.S., to approve the Plan. This Section provides that "notice, hearing and final adoption of a proposed water control plan or plan amendment must comply with the provisions of this Chapter".

The process for Unit Development and the Adoption of a Water Control Plan must be followed. This process includes the following:

I. Unit of Development: Formal creation of Unit of Development.

a. Request to Form Unit of Development

b. Board Meeting
- Adopt Resolution of Intent to form Unit

c. Advertise for Objections

d. Board Meeting
- Receive objections to formation of Unit
- Adopt Resolution Approving and Confirming Creation of Unit
- Authorization to prepare water control plan

II. Approval of Water Control Plan:

a. Engineer submits proposed Plan at Board of Supervisor's Meeting at which time the Board adopts the Resolution to consider adoption of the Plan.

b. Notice of Public Hearing on Proposed Plan is published following adoption of the Plan. (Once a week for three (3) consecutive weeks.)

c. Plan is delivered to South Florida Water Management District for review and comment which has sixty (60) days to comment.

d. Chapter 298.301 Notices are issued. Mail Notice to landowners, South Florida Water Management District, County Commission of County and any municipality in which District is located.

e. Public Hearing on Plan is conducted by the Board of Supervisors. Following the Public Hearing on the Plan, the Board would direct the Engineer to prepare the Engineer's Report.

f. Engineer prepares and circulates draft of the Engineer's Report.

g. Following completion of the Engineer's Report it is filed with the Secretary of the District.

h. Notice is published of the Public Hearing of Filing Engineer's Report and Plan. (Once a week for two (2) consecutive weeks with a twenty (20) day response period from date of last publication.)

i. A Public Hearing is held by the Board of Supervisors on the Report and Plan. South Florida Water Management comments are considered, if applicable.

j. Approval of Engineer's Report and Plan by Board of Supervisors.

We hope this information is helpful to you. Please let us know if you have any questions concerning the above.

EXHIBIT "D"

SPECIAL CONDITIONS OF PERMIT APPROVAL*

1. The discharge from the Property for the design storm shall be processed through South Florida Water Management District to increase the District's allowable discharge by the same rate entering the District's system.

2. Prior to initiation of drainage services, LANDOWNER shall use commercially reasonable efforts to assure that Palm Beach County modifies its District drainage connection permit for Northlake Boulevard to reflect the Project's outfall.

3. The Project shall satisfy the District's adopted Surface Water Management Policy, as it may be revised from time to time.

4. LANDOWNER shall pay all costs associated with the alteration of the District's SFWMD Environmental Resource Permit to allow for an increase in discharge into the Indian Trail Drainage System equal to the discharge from the Property.

* These conditions are not intended to be inclusive.

EXHIBIT "E"
NOTICE AND DISCLOSURE OF TAXING AUTHORITY

This Instrument Prepared by
and to be Returned to:

CALDWELL PACETTI EDWARDS SCHOECH & VIATOR LLP
1555 Palm Beach Lakes Blvd, Suite 1200
West Palm Beach, FL 33401

NOTICE AND DISCLOSURE OF TAXING AUTHORITY
BY
INDIAN TRAIL IMPROVEMENT DISTRICT
(Unit of Development Number ____)

INDIAN TRAIL IMPROVEMENT DISTRICT ("INDIAN TRAIL"), an independent special district and political subdivision of the State of Florida, has or intends to construct and/or maintain public facilities and improvements for the benefit of the real property described in attached **Exhibit "A",** which real property comprises INDIAN TRAIL's Unit of Development No._____ (the "Unit").

As a result of INDIAN TRAIL's construction and/or maintenance of these public facilities and improvements, INDIAN TRAIL advises all present and future owners of real property within the Unit that they will be required to annually pay an amount to INDIAN TRAIL for the cost of constructing and/or maintaining these public facilities and improvements.

INDIAN TRAIL's annual bill to the owners of real property within the Unit will be shown, in addition to real property taxes and charges of other governmental entities, on the Real Property Tax Bill sent out around November of each year by the Palm Beach County Tax Collector.

If you should have any questions regarding this notice or your obligation to pay these charges, please write to INDIAN TRAIL IMPROVEMENT DISTRICT at 13476 61st Street North, West Palm Beach, Florida 33412-1915 or call Indian Trail's Executive Director at 561-793-0874.

Executed this _____ day of _____, 20__.

[DISTRICT SEAL]

INDIAN TRAIL IMPROVEMENT DISTRICT, an Independent Special District of the State of Florida

ATTEST:

By: _____

_____, Secretary

By:_____

_____, President

STATE OF FLORIDA)
) ss:
COUNTY OF PALM BEACH)

The foregoing instrument was executed before me this _____day of _____, 20__, by_____, as President of INDIAN TRAIL IMPROVEMENT DISTRICT, who is personally known to me.

[Notary Seal]

_____
Signature of person taking acknowledgment

_____
Notary Public
Commission Number:
My Commission Expires:

Prepared by and
After recording, return to:
K. Michelle Jessell, Esquire
Nelson Mullins Riley & Scarborough LLP
1905 NW Corporate Blvd, Suite 310
Boca Raton, FL 33431

PARTIAL RELEASE OF DRAINAGE SERVICE AGREEMENT BETWEEN INDIAN TRAIL IMPROVEMENT DISTRICT AND NORTHLAKE 20, LLC

(Tract R-2 and Utility Easement, Vintage Oaks T1 Plat)

THIS PARTIAL RELEASE OF DRAINAGE SERVICE AGREEMENT BETWEEN INDIAN TRAIL IMPROVEMENT DISTRICT AND NORTHLAKE 20, LLC (this "Partial Release"), is made as of December ___, 2024, by **INDIAN TRAIL IMPROVEMENT DISTRICT**, an independent special district of the State of Florida (the "District") and **D.R. HORTON, INC.,** a Delaware corporation ("DHI"), as Successor-in-Interest to Northlake 20, LLC.

RECITALS:

WHEREAS, the District and Northlake 20, LLC, a Florida limited liability company, entered into a Drainage Service Agreement for the property described in **Exhibit "A"** (the "Property"), dated November 7, 2007 and recorded on November 20, 2007 in Official Records Book 22269, Page 1465, of the Public Records of Palm Beach County, Florida (the "Drainage Agreement").

WHEREAS, DHI is the current owner of the Property, and DHI is conveying a portion of the Property to Palm Beach County for road right-of-way and granting a easement to Palm Beach County for a sidewalk as more particularly described in **Exhibit "B"** attached hereto (the "Released Property"); and

WHEREAS, it is the intention of the District and DHI that the Released Property no longer be subject to the Drainage Agreement.

NOW THEREFORE, FOR VALUABLE CONSIDERATION, the receipt and sufficiency of which are hereby acknowledged, the District and DHI do hereby release and forever discharge the Released Property from the operation of the Drainage Agreement.

IT IS UNDERSTOOD AND AGREED that the Drainage Agreement shall otherwise remain in full force and effect.

WITNESS the execution of this Partial Release by the undersigned is made as of the date first above written.

ATTEST:

By:_____

Secretary

INDIAN TRAIL IMPROVEMENT DISTRICT, an independent special district of the State of Florida

By:_____

President, Board of Supervisors

STATE OF FLORIDA)
) SS:
COUNTY OF PALM BEACH)

The foregoing instrument was acknowledged before me by means of ☐ physical presence or ☐ online notarization, this ___ day of_____, 20___, by _____, as President of the Board of Supervisors of Indian Trial Improvement District, an independent special district of the State of Florida, who is personally known to me or who has produced _____ as identification.

_____

Notary Public, State of Florida

_____

Printed Name of Notary Public
My Commission expires:

DHI:

D. R. HORTON, INC., a Delaware corporation

By:_____
Rafael J. Roca, Vice President

STATE OF FLORIDA)
) SS:
COUNTY OF _____)

The foregoing instrument was acknowledged before me by means of ☐ physical presence or ☐ online notarization, this ___ day of _____, 20_____, by Rafael J. Roca, as Vice President of D.R. Horton, Inc., a Delaware corporation, who is personally known to me or who has produced _____ as identification.

_____
Notary Public, State of Florida

_____
Printed Name of Notary Public
My Commission expires:

EXHIBIT "A"

LEGAL DESCRIPTION OF THE PROPERTY

THAT PORTION OF THE WEST ONE-HALF (W1/2) OF THE EAST ONE-HALF (E1/2) OF SECTION 14, TOWNSHIP 42 SOUTH, RANGE 41 EAST, PALM BEACH COUNTY, FLORIDA, LYING SOUTH OF THE RIGHT-OF-WAY FOR WEST LAKE PARK ROAD (N/K/A NORTHLAKE BLVD), LESS ADDITIONAL RIGHT-OF-WAY FOR NORTHLAKE BLVD AS DESCRIBED IN THAT CERTAIN ORDER OF TAKING RECORDED IN OFFICIAL RECORDS BOOK 12173, PAGE 5, OF THE PUBLIC RECORDS OF PALM BEACH COUNTY, FLORIDA.

EXHIBIT "B"
THE RELEASED PROPERTY

TRACT R-2, VINTAGE OAKS TI, ACCORDING TO THE PLAT THEREOF, AS RECORDED IN PLAT BOOK 137, PAGE 132, OF THE PUBLIC RECORDS OF PALM BEACH COUNTY, FLORIDA.

THE THIRTY FOOT UTILITY EASEMENT LOCATED WITHIN TRACT OS-1, VINTAGE OAKS T1, ACCORDING TO THE PLAT THEREOF, AS RECORDED IN BOOK 137, PAGE 132, OF THE PUBLIC RECORDS OF PALM BEACH COUNTY, FLORIDA.

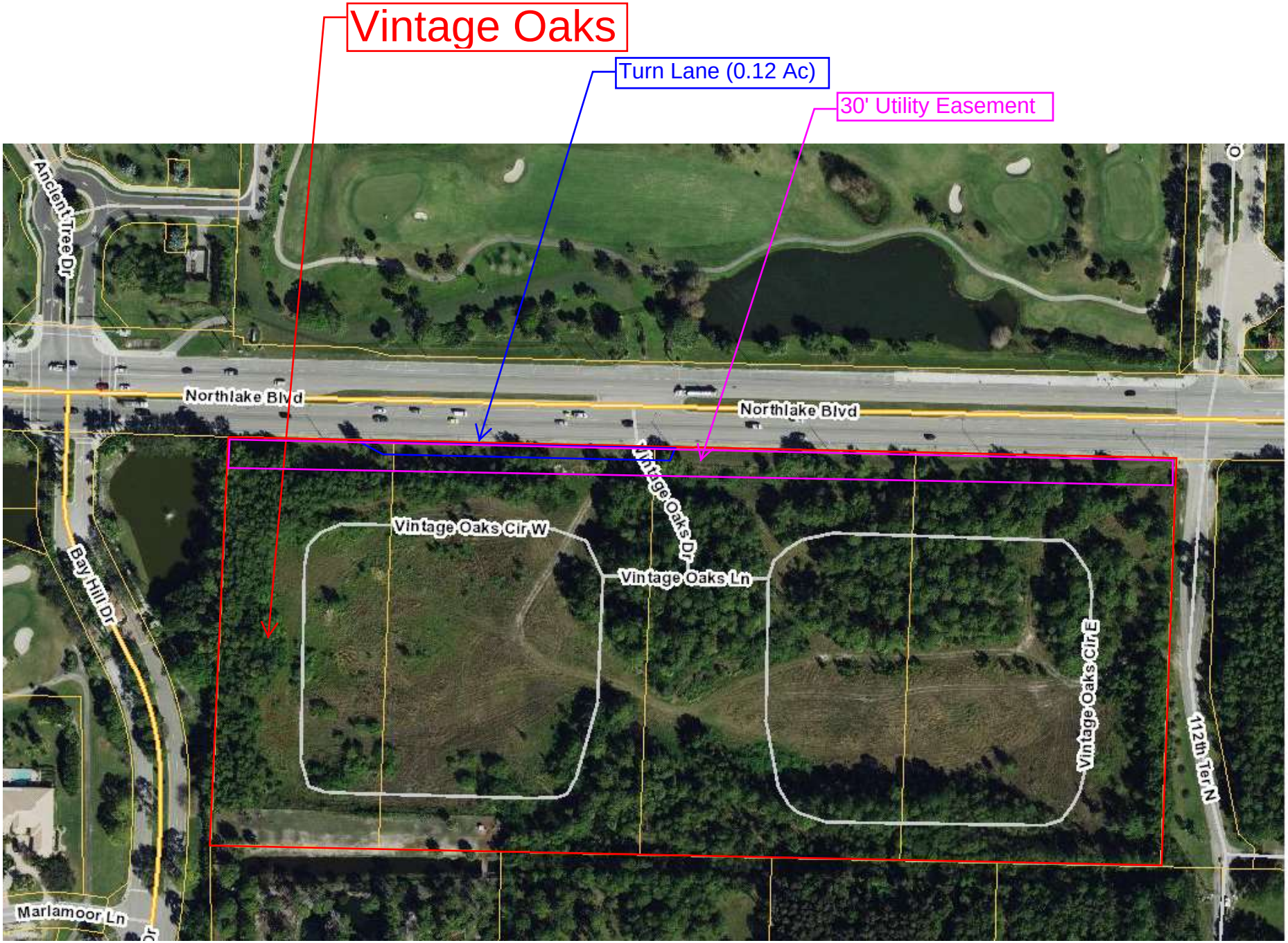
Vintage Oaks
Turn Lane (0.12 Ac)
30' Utility Easement
Ancient Tree Dr
Northlake Blvd
Northlake Blvd
Vintage Oaks Dr
Vintage Oaks Cir W
Vintage Oaks Ln
Vintage Oaks Cir E
Bay Hill Dr
112th Ter N
Marlamoor Ln

Vintage Oaks

Drainage Path
(Outfall Route)

D·R·HORTON
America's Builder

September 25, 2024

Indian Trail Improvement District
13476 61st Street North
West Palm Beach, FL 33412

To Whom It May Concern:

We hereby authorize the Indian Trail Improvement District to initiate the Unit of Development process for our Vintage Oaks project located at 11690 Northlake Boulevard, Palm Beach Gardens, FL. Please place us on the Board of Supervisors Agenda for October 16th, 2024.

Thank you for your assistance. Should you require additional information, please contact Darlene de Paula Jones or myself at 954-637-6779 or 561-706-3747.

Sincerely,

Maria Bolivar

Maria D. Bolivar
Entitlements Manager

6123 Lyons Road, Coconut Creek, FL 33073
(954) 949-3000
www.drhorton.com

CFN 20070529347
OR BK 22269 PG 1465
RECORDED 11/20/2007 15:58:04
Palm Beach County, Florida
Sharon R. Bock, CLERK & COMPTROLLER
Pgs 1465 - 1477; (13pgs)

Return To:
Frank S. Palen, Esquire
CALDWELL & PACETTI LLP
P. O. Box 2775
Palm Beach, FL 33480-2775

Property Control №s: 00-41-42-14-00-000-5050, -5060, -5070, & -5080

DRAINAGE SERVICE AGREEMENT BETWEEN INDIAN TRAIL IMPROVEMENT DISTRICT AND NORTHLAKE 20, LLC (Non-Active Unit of Development No. ____)

THIS AGREEMENT shall be effective as of the 7th day of November, 2007 and is being entered into by and between the **INDIAN TRAIL IMPROVEMENT DISTRICT**, an independent special district of the State of Florida, whose address is 13476 61st Street North, West Palm Beach, Florida 33412 (hereafter referred to as the "District"), and **NORTHLAKE 20, LLC**., a Florida Limited Liability Company, whose address is 13676 Hamlin Boulevard, West Palm Beach, Florida 33412 (hereafter referred to as the "Landowner").

W I T N E S S E T H:

WHEREAS, the District is an independent special district created and operating in accordance with the provisions of Chapter 2002-330, Laws of Florida, and applicable provisions of Chapter 298, Florida Statutes (together the "Act"); and

WHEREAS, the Landowner is a Florida limited liability company; and

WHEREAS, the Landowner owns the parcel of real property described on attached **Exhibit "A"** (the "Property"), which it intends to use for commercial purposes and which lies outside of but adjacent to the geographical boundary of the District; and

WHEREAS, the District currently owns and operates a surface water management system (the "Indian Trail Water Management System") within its geographical boundaries; and

WHEREAS, the District has adopted certain Polices & Procedures regarding provision of water management services for Non-Active Units of Development located outside its geographical boundaries to connect to the existing Indian Trail Water Management System; and

WHEREAS, in order to improve the Property, the Landowner requires an outfall for the Property's surface water management system and has requested the District to allow it to install an outfall connection (the "Connection") to the Indian Trail Water Management System; and

WHEREAS, the District is willing to accommodate installation of the Connection and to provide water management services to the Property on a continuing basis, but only in accordance with the terms and provisions of its adopted Policies and Procedures and of this Agreement.

NOW, THEREFORE, in consideration of the mutual covenants and promises hereafter set forth, the receipt and sufficiency of which is hereby acknowledged, the parties agree as follows:

ARTICLE 1. RECITALS.

The above recitals are hereby true and correct to best of the knowledge of the parties hereto and are incorporated herein by this reference.

ARTICLE 2. AUTHORITY FOR AGREEMENT.

Each party to this Agreement does hereby acknowledge and agree that they and their respective undersigned representatives have the lawful authority to execute and enter into this Agreement for the purposes reflected herein.

ARTICLE 3. DISTRICT PERMIT ISSUANCE.

Subject to the Landowner's satisfaction and compliance with the requirements and provisions of this Agreement, the District shall issue the hereafter identified permit for the installation of a Connection from the Property to the Indian Trail Water Management System.

ARTICLE 4. LANDOWNER'S UNDERSTANDINGS.

(a) The parties agree that they will use their best efforts to obtain approval from the Florida Legislature to change the District's legislative boundaries to include the Property. The Landowner hereby consents to the filing by the District in the next available legislative cycle of a local bill to the Florida Legislature to change the District's legislative boundaries. The District shall be exclusively responsible for determining the appropriate manner of filing and advancing the local bill. Landowner will cooperate with the District to the extent necessary to obtain legislative approval of such boundary adjustment, including the provision, if required, of consents from all affected landowners. The District shall prepare, at the Landowner's expense, any documentation reasonably required to pursue and support the petition.

(b) It is the intent of the parties that the Property should become an Active Unit of Development within the District within five (5) years of execution of this Agreement. Landowner understands that the local bill to adjust the boundaries of the District may not be granted by the state Legislature. In addition to any other grounds for termination permitted by this Agreement, the District may terminate this Agreement: (1) if, despite diligent efforts by the parties to promote the local bill, legislative approval is not received within the two (2) annual legislative cycles following initial submittal of the local bill; or (2) if the District's Water Control Plan is not amended to incorporate the Property within five (5) years of execution of this Agreement. This Agreement shall remain in full force and effect until terminated.

(c) The District shall, at Landowner's expense, initiate any changes to the District's Water Control Plan necessitated by this Agreement or by the addition of Landowner's Property to the District.

(d) Upon approval of the District boundary adjustment by the Legislature, Landowner shall promptly execute a Standard Landowner's Agreement for the Property, and District shall promptly initiate the process established therein to create an Active Unit of Development.

(e) Unless otherwise expressly agreed herein, this Agreement provides only for a Connection from the Property to the Indian Trail Water Management System and provision of continuing water management services by the District. The District does not hereby assume responsibility for maintenance of any water management systems or functions internal to the Property. The District shall have the right but not the obligation to maintain the outfall control structure.

(f) Any and all costs and expenses of the District to effectuate this Agreement, which are to be borne by the Landowner, shall be reasonable and customary.

ARTICLE 5. <u>CONNECTION APPROVAL, CONSTRUCTION AND MAINTENANCE</u>.

The Landowner shall be required to satisfy and comply with the following conditions and obligations as related to the approval, construction, operation and maintenance of the Connection and any affected District's works or facilities, namely:

(a) The Landowner shall be solely responsible for the proper and timely design, construction, installation, and subsequent maintenance of the Connection without recourse to the District.

(b) On or before ninety (90) calendar days from the date on which a final site plan for the Property is approved by Palm Beach County and prior to commencement of the installation of the Connection, the Landowner shall submit, on its own behalf, a properly completed and executed special permit application to the District, with accompanying signed and sealed plans and specifications for the proposed Connection, which permit application, if and when approved by the District, shall be the herein referenced "Permit". At a minimum, the permit to be issued by the District shall contain the conditions set forth on attached **Exhibit "B"**.

(c) The proposed Connection and its intended use must satisfy and comply with all other governmental agencies' rules, regulations and permit requirements.

(d) The Connection shall not be installed until: (1) the District has approved and issued the Permit authorizing such Connection to the District Water Management System; (2) Landowner has paid in full the fees and charges due pursuant to Article 6, below; and (3) all other required governmental approvals and permits have been issued for the Connection and copies of same provided to the District.

(e) Following installation of the Connection, the Landowner shall thereafter be responsible for all costs and expenses as may be necessary for its continued proper operation, repair and maintenance.

(f) The Landowner shall be responsible for payment of any costs that may be reasonably and necessarily incurred by the District for such design, permitting and/or construction of modifications to the Indian Trail Water Management System that must be carried

out in order to allow for the installation of the Connection. These District costs and expenses may include but are not limited to such legal, administrative, surveying and engineering costs and expenses as may be incurred by the District in conjunction with such activity. They shall be paid within thirty (30) calendar days of the issuance by the District of a written invoice for payment of same to the Landowner.

(g) It is acknowledged that there must be a continuously operable control structure installed on the outfall that allows the District to shut and stop discharges on an "as–needed" basis. The District shall have exclusive authority to operate the control structure, subject to the terms and conditions of the Project's SFWMD permit. The legal right to access the control structure shall be conveyed to the District. Maintenance responsibility for the control structure shall remain that of Landowner or the POA. However, the District shall have the right, but not the obligation, to assume maintenance responsibility if in its opinion the control structure is not being properly maintained. If the District assumes maintenance responsibility, any additional costs of such service shall be assessed to the Landowner(s).

(h) The Landowner understands that a readjustment or assessment of benefits as required by Section 298.55, Florida Statutes, as amended, may occur with regard to the Property.

ARTICLE 6. <u>FEES AND CHARGES.</u>

The Landowner shall be obligated to pay to the District the following fees and charges, namely:

(a) A non-refundable, lump sum reimbursement of such reasonable administrative, engineering and legal expenses as have been or will be incurred by the District for the preparation of this Agreement, payable within sixty (60) days of Landowner's execution of this Agreement.

(b) An Initial Advance in the amount of **FIFTEEN THOUSAND AND NO/100 DOLLARS ($15,000.00)**, payable at the time of Landowner's execution of this Agreement, which Initial Advance shall be applied to and used by the District for the expenses incurred pursuant to the requirements of Article 4, above. Subsequent costs shall be invoiced to the Landowner on a monthly basis as they accrue.

(c) A one-time, non-refundable Drainage Connection Fee in the amount of **SEVEN THOUSAND FIVE HUNDRED AND NO/100 DOLLARS** ($7,500.00) per gross acre of the Property. The Connection Fee shall be the total sum of **ONE HUNDRED THIRTY-FOUR THOUSAND ONE HUNDRED NINETY FIVE AND 50/100 DOLLARS ($**134,195.50) (17.893 acres x $7,500 = $134,195.50), payable prior to the issuance of the District's Permit.

(d) An annual access and usage fee (the "Annual Access Fee") which shall be assessed by the District on a per acre basis through the issuance of a written invoice to the Landowner, its successors or assigns. Invoices shall continue until such time as the Property is added to the District's annual non-ad valorem assessment roll.

(1) District staff will determine the acreages subject to the Annual Access Fee in accordance with the procedures of the Palm Beach County Tax

Collector, discounting therefrom any real property acreage not subject to District assessments.

(2) The Annual Access Fee shall be due and payable from the date of Connection.

(3) If the Property is to be developed for residential purposes, the Landowner shall establish a property owners association ("POA") for the Property to which the Landowner shall assign the duty to pay the Annual Access Fee. Any Declaration of Covenants and Restrictions applicable to the Property shall include the obligation to pay the Annual Access Fee as a common expense of the POA, which may assess its members therefor.

(4) The District shall send an invoice for the Annual Access Fee to the Landowner or, at the District's discretion, the POA, payment of which shall be a condition precedent to initial or continued Connection. The initial invoice shall be prorated for the balance of the District's then fiscal year. Thereafter, the invoice shall be issued on or about November 1st of each year, beginning on November 1st of the first calendar year following the District's issuance of a Permit for installation of the Connection.

(5) The Annual Access Fee shall be due, owing and paid on or before April 1st of the calendar year immediately following the year that the District written invoice for same has been issued to the Landowner

(6) The Annual Access Fee shall be due, determined and calculated in the same manner and at the same rate as the District for the annual assessment and levy of its non-ad valorem assessments on assessable real property within its representative unit of development for the M-1 Basin, Unit of Development No. M1-S.

(7) The Landowner's obligation to pay the Annual Access Fee shall cease at such time as the Property appears on District's non-ad valorem assessment roll. The parties acknowledge and agree however, that the Property cannot be included in the District's annual non-ad valorem assessment roll and/or Palm Beach County Tax Collector's Real Property tax bill until such time as the Property is legislatively included into the District and the District's Water Control Plan is approved and/or amended to include the Property.

(8) Once annexed into the District, the Property shall be subject to the same method of assessment and rate of non-ad valorem assessment as is or will be applied and levied annually by District upon other similarly sized or classified parcels of real property located within the District.

(e) All fees and charges at standard rate(s) that the District imposes for similar permit application submittal, reviews and processing.

ARTICLE 7. DISCLOSURES. The Landowner shall disclose the existence of this Agreement to all subsequent purchasers, in a format acceptable to the District, which fully discloses the obligation of the Landowner's successors and assigns to pay annual pro-rata charges to the District and in the applicable Property Owner's Association's Declaration of Covenants. The Landowner, prior to its conveying, selling, transferring or leasing any interest in the Property, shall prepare and submit to The District for approval the following disclosure statement(s).

(a) One of the disclosure statements must be in form substantially similar to the following:

> **"THE INDIAN TRAIL IMPROVEMENT DISTRICT IMPOSES ASSESSMENTS ON THIS PROPERTY THROUGH A SPECIAL TAXING DISTRICT. THESE ASSESSMENTS PAY THE CONSTRUCTION, OPERATION, AND MAINTENANCE COSTS OF CERTAIN PUBLIC FACILITIES OF THE DISTRICT AND ARE SET ANNUALLY BY THE BOARD OF SUPERVISORS OF THE DISTRICT. THESE ASSESSMENTS ARE IN ADDITION TO COUNTY AND ALL OTHER TAXES AND ASSESSMENTS PROVIDED FOR BY LAW."**
>
> This disclosure shall be prominently displayed and contained in all: (i) sales brochures for all or any portion of the Property, (ii) purchase contracts with prospective buyers by means of a separate paragraph in the Real Estate Contract immediately above the signature line for the purchaser, which paragraph must be in capital letters and in contrasting or highlighted typeface and (iii) contracts for leases of land within the Property.

(b) The other disclosure shall appear in any homeowner's and/or property owner association documents applicable to the Property, including a Declaration of Covenants, if any. The District shall be entitled to receive and the Landowner agrees to provide to the District such verification of the provision of the disclosure statement as the District deems necessary and appropriate, but in any event the disclosure statement shall, at a minimum, disclose the following: (1) the Property is presently located outside the boundaries of the District, but the District will provide water management services based on the terms of this Agreement; (2) the general nature an approximate location of the water management system improvements affected by this Agreement; (3) that the Developer has agreed to annex the Property into the District and to form an Active Unit of Development; (4) that until such time as the Property becomes an Active Unit of Development, the Property shall be subject to the Annual Access Fee for water management and drainage purposes provided herein; (5) that, once the Property is annexed to and becomes and Active Unit of Development within the District, the District will annually levy and collect non-ad valorem assessments for water management purposes upon the Property, (6) that these non-ad valorem assessments will be included in the Palm Beach County Tax Collector's annual Real Property Tax Bill and collected by the Tax Collector; (7) if known, the approximate annual amount of the non-ad valorem assessments anticipated to be levied and assessed by the District upon the Property; and (8) that subsequent or successor Landowners within the Property acknowledge and consent to the above disclosure requirements and shall not object to same.

ARTICLE 8. DEFAULT REMEDIES.

(a) In the event the Landowner should fail to timely comply with the terms, obligations and provisions of this Agreement, then in that event the District may, if it so elects, terminate this Agreement following the provisions of thirty (30) calendar days advanced written notice of such intent to terminate which notice shall reflect the nature of the basis for termination. During said thirty (30) day calendar period, the Landowner shall have the right to cure the item or items that are the basis for the District's issuance of the notice of termination.

(b) In the event the Landowner should fail to pay the Fees and Charges identified in Article 6 ("Fees and Charges"), including an Annual Access Fee, required by the terms and provisions of this Agreement, the District shall be entitled, in addition to all other available legal remedies, to the following cumulative and non-exclusive remedies and/or damages:

(1) To impose and collect simple interest at the rate of 18% per annum on the unpaid balance of any outstanding Fees and Charges, with said interest to commence to accrue on the day immediately following the due date.

(2) Following provision of 30 calendar days advance written notice to the Landowner (during which time any unpaid Fees and Charges may be paid in order to cure the default), to: (i) terminate this Agreement and discontinue the Connection to the Indian Trail Water Management System, or (ii) initiate such legal action as it deems necessary and appropriate to compel payment of the unpaid Fees and Charges, plus accrued interest and/or compliance with the terms and provisions of this Agreement. Any unpaid Fees and Charges, plus accrued interest, shall survive the termination of this Agreement and may be reduced to a judgment.

ARTICLE 9. TERM.

Unless otherwise terminated as authorized in this Agreement, this Agreement shall continue for a term of ninety-nine (99) years from its Effective Date. Notwithstanding the foregoing, Landowner may terminate this Agreement for any reason with thirty (30) days prior notice to the District; provided, however, if as of the termination date there are any outstanding the District claims or invoiced Annual Access Fees, then in that event the enforcement provisions of the Agreement shall survive such termination

ARTICLE 10. MISCELLANEOUS PROVISIONS.

(a) **Notice**. All notices, amendments, requests, consents and other communications required or permitted under this Agreement shall be in writing (which shall include facsimile communications provided facsimile machine written confirmation of sending and delivery is obtained), hand delivered by prepaid express courier or messenger service, or mailed by registered or certificated mail (postage prepaid), return receipt requested, to the following addresses:

As to the District: **INDIAN TRAIL DISTRICT IMPROVEMENT DISTRICT**
13476 61st Street North
West Palm Beach, Florida 33412
Attn: District Administrator
Telephone: (561) 793-0874
Facsimile: (561) 793-3716

As to Landowner: **NORTHLAKE 20, LLC.**
13676 Hamlin Boulevard
West Palm Beach, Florida 33412

Attn: Aldo Basile
Telephone: 561-791-7561
Facsimile: 561-791-7565
E-mail: akaservices@bellsouth.net.

(b) **Entire Agreement**. This Agreement constitutes the entire understanding and agreement between the parties with respect to the subject matter hereof and shall be a covenant running with the Property herein described.

(c) **Binding Effect**. All of the terms and provisions of this Agreement, whether so expressed or not, shall be binding upon, inure to the benefit of, and be enforceable by the parties and their respective legal representatives, grantees, successors, and permitted assigns.

(d) **Assignability**. Except as otherwise authorized in the Agreement, the Agreement or any its obligations may not be assigned without the prior written consent of both parties to this Agreement, which consent shall not be unreasonably withheld.

(e) **Severability**. If any part of this Agreement is contrary to, prohibited by or deemed invalid under applicable law or regulation, such provision shall be inapplicable and deemed omitted to the extent so contrary, prohibited or invalid, but the remainder hereof shall not be invalidated thereby and shall be given full force and effect so far as possible.

(f) **Governing Law and Venue**. This Agreement and all transactions contemplated by this Agreement shall be governed by, and construed and enforced in accordance with, the laws of the State of Florida without regard to any contrary conflicts of law principle. Venue of all proceedings in connection herewith shall lie exclusively in the Fifteenth Judicial Circuit in and for Palm Beach County, Florida, and each party hereby waives whatever its respective rights may have been in the selection of venue.

(g) **Non-Jury Trial**. The parties hereby waive any rights any of them may have to a jury trial in any litigation arising out of or related to this Agreement and agree that they shall not elect a trial by jury. The parties hereto have separately, knowingly and voluntarily given this waiver of right to trial by jury with the benefit of competent legal counsel.

(h) **Headings**. The headings contained in this Agreement are for convenience of reference only, and shall not limit or otherwise affect in any way the meaning or interpretation of this Agreement.

(i) **Effective Date**. The Effective Date of this Agreement shall be as of the last date of its signing by both of the parties hereto.

(j) **Enforcement of Remedies**. The failure of any party to insist on the strict performance of any of the terms and conditions hereof shall be deemed a waiver of the rights to remedies that the party may have regarding that specific instance only, and shall not be deemed a waiver of any subsequent breach or default in any terms or conditions.

(k) **Construction**. The parties acknowledge that each has shared equally in the drafting and preparation of this Agreement and, accordingly, no Court or Administrative Hearing Officer construing this Agreement shall construe it more strictly against one party than the other and every covenant, term and provision of this Agreement shall be construed simply according to its fair meaning.

(l) **Attorney's Fees**. It is hereby understood and agreed that in the event any lawsuit in the judicial system, federal or state, is brought to enforce compliance with this Agreement or interpret same, or if any administrative proceeding is brought for the same purposes, each party to said action shall be responsible for its own attorney's fees and costs, including appellate fees and costs.

(m) **Recording**. This Agreement shall be recorded in the public records of Palm Beach County, Florida

(n) **Counterparts**. This Agreement may be executed in one or more counterparts, each of which shall be deemed an original, but all of which together shall constitute the same instrument.

REMAINDER OF PAGE INTENTIONALLY LEFT BLANK

IN WITNESS WHEREOF, the parties have executed this Agreement on the dates hereinafter written.

Executed by the **DISTRICT** this 7th day of November, 2007.

{DISTRICT SEAL}

INDIAN TRAIL IMPROVEMENT DISTRICT, an independent special district of the State of Florida.

ATTEST:

By: _____
Secretary

By: Michelle Damone
President, Board of Supervisors

STATE OF FLORIDA)
)ss:
COUNTY OF PALM BEACH)

Before me personally appeared Michelle Damone President of INDIAN TRAIL IMPROVEMENT DISTRICT, who is (✓) personally known to me or has produced _____ (type of identification) as identification and did not take an oath.

WITNESS my hand and seal this 7th day of November, 2007.

(NOTARY'S SEAL)

Tonia L. Worthington
Notary Public signature
Commission Number
My Commission Expires:

TONIA L. WORTHINGTON
Notary Public, State of Florida
My Comm. Exp. March 14, 2008
No. DD 289711

Executed by **LANDOWNER** this 30th day of October, 2007.

NORTHLAKE 20, LLC, a Florida Limited Liability Company

By: _____
Aldo Basile
Its Managing Member

STATE OF FLORIDA)
)ss:
COUNTY OF PALM BEACH)

The foregoing instrument was executed before me this 30th day of October, 2007, by Aldo Basile, as Managing Member of NORTHLAKE 20, LLC, a Florida Limited Liability Company, who is (X) personally known to me or has (____) produced _____ as identification.

[Notary Seal]

STACY L. CANDIA
Notary Public, State of Florida
My Comm. Expires Feb. 3, 2009
No. DD392908

_____
Notary Public Signature
Commission Number
My Commission Expires:

My Commission Expires:

EXHIBIT "A"

LEGAL DESCRIPTION OF THE PROPERTY

THAT PORTION OF THE WEST ONE-HALF OF THE EAST ONE-HALF OF SECTION 14, TOWNSHIP 42 SOUTH, RANGE 41 WEST, PALM BEACH COUNTY, FLORIDA LYING SOUTH OF THE RIGHT-OF-WAY FOR WEST LAKE PARK ROAD (N/K/A/ NORTHLAKE BOULEVARD), LESS ADDITIONAL RIGHT-OF-WAY FOR NORTHLAKE BOULEVARD, AS DESCRIBED IN THAT CERTAIN ORDER OF TAKING RECORDED IN OFFICIAL RECORDS BOOK 12173, PAGE 5, OF THE PUBLIC RECORDS OF PALM BEACH COUNTY, FLORIDA.

OVERALL AREA OF PROPERTY SURVEYED IS 17.893 ACRES, MORE OR LESS. AREA OF INCLUDED OVERLAP AREA IS 1.432 ACRES, MORE OR LESS.

EXHIBIT "B"

SPECIAL CONDITIONS OF PERMIT APPROVAL*

1. The discharge from the Property for the design storm shall be processed through South Florida Water Management District to increase the District's allowable discharge by the same rate entering the District's system.

2. The project control structure(s) shall be operable and under control of the District. The structure (s) shall be capable of shutting down discharge from the Property including no bleeder discharge for up to the one hundred (100) year three (3) day storm event. It shall also be operable to allow pre-storm drawdown to at least two (2) feet below the water control elevation.

3. The perimeter grade shall be set at a minimum of the one hundred (100) year three (3) day storm event.

4. Water quality criteria may be satisfied with the use of a stormwater exfiltration system for commercial land uses. Water quality criteria may not be satisfied with the use of a stormwater exfiltration system for residential land uses. Water quality standards shall be attained by on-site storage of runoff. Credit for solids and voids storage is applicable for exfiltration systems in commercial land use areas, but quantity credit shall not be given for underground percolation.

5. The Landowner shall pay all costs associated with the alteration of the District's SFWMD Environmental Resource Permit to allow for an increase in discharge into the Indian Trail Drainage System equal to the discharge from the Property.

6. The Landowner shall execute an agreement with the Bayhill POA ("Bayhill") or the Rustic Lakes POA ("Rustic Lakes") providing for an alteration of the Bayhill or Rustic Lake's agreement with the District to allow the conveyance of the Property's storm water discharge through the Bayhill or the Rustic Lakes Subdivisions to the Indian Trail Drainage System. Said agreement shall also be approved by ITID.

* These conditions are not intended to be inclusive.

VINTAGE OAKS T1

LOCATED IN SECTION 14, TOWNSHIP 42 SOUTH, RANGE 41 EAST
CITY OF PALM BEACH GARDENS
PALM BEACH COUNTY, FLORIDA

APRIL 2024

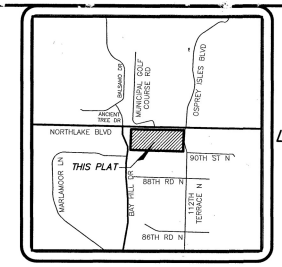

N

LOCATION MAP
(NOT TO SCALE)

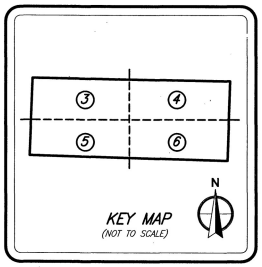

KEY MAP
(NOT TO SCALE)

132

State of Florida
County of Palm Beach } SS

THIS PLAT WAS FILED FOR RECORD AT 1:12 P.M.

THIS 2 DAY OF May A.D. 2024 AND DULY RECORDED

IN PLAT BOOK 137 ON PAGES 132 THROUGH 137

JOSEPH ABRUZZO
CLERK OF THE CIRCUIT COURT AND COMPTROLLER

BY: Rudy Landal
DEPUTY CLERK

SHEET 1 OF 6 SHEETS

CLERK

DEDICATION AND RESERVATION

KNOW ALL MEN BY THESE PRESENTS THAT D.R. HORTON, INC., A DELAWARE CORPORATION, OWNER OF THE LAND SHOWN HEREON AS "VINTAGE OAKS T1", LYING AND SITUATE IN SECTION 14, TOWNSHIP 42 SOUTH, RANGE 41 EAST, CITY OF PALM BEACH GARDENS, PALM BEACH COUNTY, FLORIDA. BEING MORE PARTICULARLY DESCRIBED AS FOLLOWS:

THAT PORTION OF THE WEST ONE–HALF (W 1/2) OF THE EAST ONE–HALF (E 1/2) OF SECTION 14, TOWNSHIP 42 SOUTH, RANGE 41 EAST, PALM BEACH COUNTY, FLORIDA, LYING SOUTH OF THE RIGHT–OF–WAY FOR WEST LAKE PARK ROAD (N/K/A) NORTHLAKE BOULEVARD), LESS ADDITIONAL RIGHT–OF–WAY FOR NORTHLAKE BOULEVARD AS DESCRIBED IN THAT CERTAIN ORDER OF TAKING RECORDED IN OFFICIAL RECORD BOOK 12173, PAGE 5, OF THE PUBLIC RECORDS OF PALM BEACH COUNTY, FLORIDA. SAID LANDS BEING MORE PARTICULARLY DESCRIBED AS FOLLOWS:

COMMENCE AT THE NORTH QUARTER CORNER (N 1/4) OF SECTION 23, TOWNSHIP 42 SOUTH, RANGE 41 EAST, PALM BEACH COUNTY, FLORIDA; THENCE NORTH 02°11'18" EAST ALONG THE WEST LINE OF THE EAST HALF (E 1/2) OF SECTION 14, TOWNSHIP 42 SOUTH, RANGE 41 EAST, A DISTANCE OF 54.02 FEET TO THE INTERSECTION OF SAID WEST LINE AND THE WESTERLY EXTENSION OF THE NORTH PLAT LIMITS AND NORTH LINE OF SAID SECTION 23 PER THE UNRECORDED PLAT OF KRAMER SUBDIVISION, SAID POINT ALSO BEING THE POINT OF BEGINNING; THENCE CONTINUE NORTH 02°11'18" EAST ALONG SAID WEST LINE, A DISTANCE OF 523.93 FEET; THENCE DEPARTING SAID WEST LINE SOUTH 89°02'42" EAST, A DISTANCE OF 1,347.14 FEET TO A POINT ON THE EAST LINE OF THE WEST HALF (W 1/2) OF THE EAST HALF (E 1/2) OF SECTION 14, TOWNSHIP 42 SOUTH, RANGE 41 EAST, PALM BEACH COUNTY, FLORIDA; THENCE SOUTH 01°50'03" WEST ALONG SAID EAST LINE, A DISTANCE OF 539.47 FEET TO A POINT ON THE AFOREMENTIONED NORTH PLAT LIMITS AND NORTH LINE OF SECTION 23 PER THE UNRECORDED PLAT OF KRAMER SUBDIVISION; THENCE NORTH 88°22'59" WEST ALONG SAID NORTH LINE, A DISTANCE OF 1,350.23 FEET TO THE POINT OF BEGINNING.

SAID LANDS CONTAIN 16.461 ACRES, MORE OR LESS.

HAVE CAUSED THE SAME TO BE SURVEYED AND PLATTED AS SHOWN HEREON AND DO HEREBY DEDICATE AS FOLLOWS:

ROADS

1. TRACT R–1, AS SHOWN HEREON, IS HEREBY DEDICATED TO HOMES AT VINTAGE OAKS HOMEOWNER'S ASSOCIATION, INC. A FLORIDA NOT FOR PROFIT CORPORATION, ITS SUCCESSORS AND ASSIGNS, FOR PRIVATE ACCESS, ROADWAY, SIDEWALK, DRAINAGE, SIGNAGE, GATE, UTILITY, PARKING, AND RELATED PURPOSES. SAID TRACT SHALL BE THE PERPETUAL MAINTENANCE RESPONSIBILITY OF SAID ASSOCIATION, ITS SUCCESSORS AND ASSIGNS, WITHOUT RECOURSE TO THE CITY OF PALM BEACH GARDENS. AN EASEMENT OVER TRACT R–1 AS SHOWN HEREON, IS HEREBY SUBJECT TO AN OVERLYING NON–EXCLUSIVE EASEMENT DEDICATED IN PERPETUITY TO THE PUBLIC FOR THE INSTALLATION, OPERATION, MAINTENANCE, REPAIR, EXPANSION AND REPLACEMENT OF UTILITIES, BOTH PUBLIC AND PRIVATE, INCLUDING, BUT NOT LIMITED TO STORMWATER FACILITIES, POTABLE WATER PIPELINES, RAW WATER PIPELINES, WASTEWATER PIPELINES, RECLAIMED WATER PIPELINES, ELECTRIC POWER LINES, TELECOMMUNICATION LINES, CABLE TELEVISION LINES, GAS LINES, AND RELATED APPURTENANCES. THE INSTALLATION OF CABLE TELEVISION SYSTEMS SHALL NOT INTERFERE WITH THE CONSTRUCTION AND MAINTENANCE OF OTHER UTILITIES. IN THE EVENT A CABLE TELEVISION COMPANY DAMAGES THE FACILITIES OF A PUBLIC UTILITY, IT SHALL BE SOLELY RESPONSIBLE FOR THE DAMAGES. NO BUILDINGS, STRUCTURES, IMPROVEMENTS, TREES, WALLS OR FENCES SHALL BE INSTALLED WITHIN THESE TRACTS WITHOUT THE PRIOR WRITTEN APPROVAL OF THE PALM BEACH COUNTY WATER UTILITIES DEPARTMENT, ITS SUCCESSORS AND ASSIGNS.

2. TRACT R–2, AS SHOWN HEREON, IS HEREBY RESERVED FOR THE OWNER THEREOF, THEIR SUCCESSORS AND ASSIGNS, FOR FUTURE RIGHT–OF–WAY TO BE CONVEYED TO PALM BEACH COUNTY BY SEPARATE INSTRUMENT.

WATER MANAGEMENT TRACTS

3. TRACTS LM–1 AND LM–2, AS SHOWN HEREON, ARE HEREBY DEDICATED TO HOMES AT VINTAGE OAKS HOMEOWNER'S ASSOCIATION, INC., A FLORIDA NOT FOR PROFIT CORPORATION, ITS SUCCESSORS AND ASSIGNS, FOR PUBLIC ACCESS, STORM WATER MANAGEMENT AND DRAINAGE PURPOSES AND SHALL BE THE PERPETUAL MAINTENANCE OBLIGATION OF SAID ASSOCIATION, ITS SUCCESSORS AND ASSIGNS, WITHOUT RECOURSE TO THE CITY OF PALM BEACH GARDENS.

OPEN SPACE TRACTS

4. TRACTS OS–1 THROUGH OS–13, INCLUSIVE, AS SHOWN HEREON, ARE HEREBY DEDICATED TO HOMES AT VINTAGE OAKS HOMEOWNER'S ASSOCIATION, INC., A FLORIDA NOT FOR PROFIT CORPORATION, FOR OPEN SPACE, LANDSCAPING, SIDEWALKS, LIGHTING, PERIMETER WALLS, FENCES AND GATES, BUS SHELTER, SIGNAGE, DRAINAGE AND UTILITY PURPOSES, FIRE BREAK ACCESS, AND FOR ACCESS TO THE ADJOINING STORM WATER MANAGEMENT TRACTS. SAID TRACTS ARE THE PERPETUAL MAINTENANCE OBLIGATION OF SAID ASSOCIATION, ITS SUCCESSORS AND ASSIGNS, WITHOUT RECOURSE TO THE CITY OF PALM BEACH GARDENS.

RECREATION TRACT

5. TRACT RA–1, AS SHOWN HEREON, IS HEREBY DEDICATED TO HOMES AT VINTAGE OAKS HOMEOWNER'S ASSOCIATION, INC., A FLORIDA NOT FOR PROFIT CORPORATION, ITS SUCCESSORS AND ASSIGNS, FOR OPEN SPACE, PARKS, AND RECREATIONAL PURPOSES. SAID TRACT IS THE PERPETUAL MAINTENANCE OBLIGATION OF SAID ASSOCIATION, ITS SUCCESSORS AND ASSIGNS, WITHOUT RECOURSE TO THE CITY OF PALM BEACH GARDENS.

UTILITY EASEMENTS

6. THE UTILITY EASEMENTS, AS SHOWN HEREON AND DESIGNATED AS "UE", ARE HEREBY DEDICATED IN PERPETUITY TO ALL GOVERNMENTAL ENTITIES AND PUBLIC UTILITIES TO INSTALL, OPERATE AND MAINTAIN THEIR RESPECTIVE FACILITIES. THE CONSTRUCTION, INSTALLATION, MAINTENANCE, AND OPERATION OF CABLE TELEVISION SERVICES SHALL NOT INTERFERE WITH THE FACILITIES AND SERVICES OF AN ELECTRIC, TELEPHONE, GAS, OR OTHER PUBLIC UTILITY. IN THE EVENT A CABLE TELEVISION COMPANY DAMAGES THE FACILITIES OF A PUBLIC UTILITY, SUCH CABLE TELEVISION COMPANY SHALL BE SOLELY RESPONSIBLE FOR THE DAMAGES. SUCH CONSTRUCTION, INSTALLATION, MAINTENANCE AND OPERATION SHALL COMPLY WITH THE NATIONAL ELECTRIC SAFETY CODE AS ADOPTED BY THE FLORIDA PUBLIC SERVICE COMMISSION. LANDS ENCUMBERED BY SUCH EASEMENTS SHALL BE THE PERPETUAL MAINTENANCE RESPONSIBILITY OF THE UNDERLYING LAND OWNER, WITHOUT RECOURSE TO THE CITY OF PALM BEACH GARDENS.

THE UTILITY EASEMENTS RUNNING ADJACENT AND PARALLEL TO PUBLIC STREETS, THE TRACTS FOR PRIVATE ROAD PURPOSES AND DRIVEWAY/PARKING TRACTS, AS SHOWN HEREON, ARE NONEXCLUSIVE EASEMENTS AND ARE HEREBY DEDICATED IN PERPETUITY TO THE PUBLIC FOR THE INSTALLATION, OPERATION, MAINTENANCE, REPAIR, EXPANSION AND REPLACEMENT OF UTILITIES, BOTH PUBLIC AND PRIVATE, INCLUDING, BUT NOT LIMITED TO, POTABLE WATER PIPELINES, RAW WATER PIPELINES, WASTEWATER PIPELINES, RECLAIMED WATER PIPELINES, ELECTRIC POWER LINES, TELECOMMUNICATIONS LINES, CABLE TELEVISION LINES, GAS LINES, AND RELATED APPURTENANCES. THE INSTALLATION OF CABLE TELEVISION SYSTEMS SHALL NOT INTERFERE WITH THE CONSTRUCTION AND MAINTENANCE OF OTHER UTILITIES. IF OTHERWISE APPROVED BY PALM BEACH COUNTY, NO BUILDINGS, STRUCTURES, IMPROVEMENTS, TREES, WALLS OR FENCES SHALL BE INSTALLED WITHIN THESE EASEMENTS WITHOUT THE PRIOR WRITTEN APPROVAL OF THE PALM BEACH COUNTY WATER UTILITIES DEPARTMENT, ITS SUCCESSORS AND ASSIGNS.

DRAINAGE EASEMENTS

7. THE DRAINAGE EASEMENTS (DE), AS SHOWN HEREON ARE HEREBY DEDICATED IN PERPETUITY FOR DRAINAGE PURPOSES. THE MAINTENANCE OF ALL DRAINAGE FACILITIES LOCATED THEREIN SHALL BE THE PERPETUAL MAINTENANCE OBLIGATION OF THE HOMES AT VINTAGE OAKS HOMEOWNER'S ASSOCIATION, INC., A FLORIDA NOT FOR PROFIT CORPORATION, ITS SUCCESSORS AND ASSIGNS, WITHOUT RECOURSE TO THE CITY OF PALM BEACH GARDENS.

BUFFER EASEMENTS

8. THE BUFFER EASEMENTS, AS SHOWN HEREON AND DESIGNATED AS "BE", ARE HEREBY DEDICATED TO HOMES AT VINTAGE OAKS HOMEOWNER'S ASSOCIATION, INC., A FLORIDA NOT FOR PROFIT CORPORATION, ITS SUCCESSORS AND ASSIGNS, FOR BUFFER PURPOSES. LANDS ENCUMBERED BY SAID EASEMENTS SHALL BE THE PERPETUAL MAINTENANCE RESPONSIBILITY OF THE OWNERS THEREOF, THEIR SUCCESSORS AND ASSIGNS, WITHOUT RECOURSE TO THE CITY OF PALM BEACH GARDENS. STRUCTURES MAY BE PERMITTED WITHIN THE BUFFER EASEMENTS AS APPROVED BY OR WITH PRIOR WRITTEN CONSENT OF HOMES AT VINTAGE OAKS HOMEOWNER'S ASSOCIATION, INC., A FLORIDA NOT FOR PROFIT CORPORATION, ITS SUCCESSORS AND ASSIGNS, AND THE CITY OF PALM BEACH GARDENS.

LAKE MAINTENANCE TRACTS

9. TRACTS LMT–1 AND LMT–2, AS SHOWN HEREON, ARE HEREBY DEDICATED TO HOMES AT VINTAGE OAKS HOMEOWNER'S ASSOCIATION, INC., A FLORIDA NOT FOR PROFIT CORPORATION, ITS SUCCESSORS AND ASSIGNS, IN PERPETUITY, FOR ACCESS TO STORMWATER MANAGEMENT AND DRAINAGE FACILITIES LOCATED WITHIN THE ASSOCIATED WATER MANAGEMENT TRACTS FOR PURPOSES OF PERFORMING ANY AND ALL MAINTENANCE ACTIVITIES PURSUANT TO THE MAINTENANCE OBLIGATION OF SAID ASSOCIATION, ITS SUCCESSORS AND ASSIGNS, WITHOUT RECOURSE TO THE CITY OF PALM BEACH GARDENS.

EMERGENCY VEHICLE ACCESS EASEMENT

10. THE EMERGENCY VEHICLE ACCESS EASEMENT, AS SHOWN HEREON, IS HEREBY DEDICATED TO HOMES AT VINTAGE OAKS HOMEOWNER'S ASSOCIATION, INC., A FLORIDA NOT FOR PROFIT CORPORATION, ITS SUCCESSORS AND ASSIGNS, IN PERPETUITY, FOR THE PURPOSE OF ACCESS, CONTROL AND JURISDICTION FOR FIRE SAFETY. STRUCTURES, FENCING OR VEGETATION, OTHER THAN SOD, ARE PROHIBITED WITHIN THE EASEMENT. LANDS ENCUMBERED BY SAID EASEMENT SHALL BE THE PERPETUAL MAINTENANCE OBLIGATION OF SAID ASSOCIATION WITHOUT RECOURSE TO THE CITY OF PALM BEACH GARDENS.

LIFT STATION TRACT

11. THE LIFT STATION TRACT, AS SHOWN HEREON AND DESIGNATED AS "LST", IS HEREBY DEDICATED IN PERPETUITY TO PALM BEACH COUNTY, ITS SUCCESSORS AND ASSIGNS, FOR THE INSTALLATION, OPERATION, MAINTENANCE, REPAIR, EXPANSION AND REPLACEMENT OF WASTEWATER LIFT STATIONS AND RELATED APPURTENANCES. THE TRACT MAY BE FENCED IN BY PALM BEACH COUNTY FOR ACCESS CONTROL PURPOSES. THE MAINTENANCE OF THE UNFENCED PORTIONS OF THIS TRACT SHALL BE THE PERPETUAL OBLIGATION OF THE PROPERTY OWNER. IF OTHERWISE APPROVED BY PALM BEACH COUNTY, NO BUILDINGS, STRUCTURES, IMPROVEMENTS, TREES, WALLS OR FENCES SHALL BE INSTALLED WITHIN THIS TRACT WITHOUT THE PRIOR WRITTEN APPROVAL OF THE PALM BEACH COUNTY WATER UTILITIES DEPARTMENT, ITS SUCCESSORS AND ASSIGNS.

IN WITNESS WHEREOF, THE ABOVE NAMED D.R. HORTON, INC., A DELAWARE CORPORATION, HAS CAUSED THESE PRESENTS TO BE SIGNED BY ITS VICE PRESIDENT AND ITS COMPANY SEAL TO BE AFFIXED HERETO, THIS 22 DAY OF April, 2024.

WITNESS: _____
Robert McLaren
(PRINT NAME)

WITNESS: _____
Rebecca Cortes
(PRINT NAME)

BY: _____
RAFAEL J. ROCA
VICE PRESIDENT

ACKNOWLEDGEMENT

STATE OF FLORIDA
COUNTY OF PALM BEACH } SS

THE FOREGOING INSTRUMENT WAS ACKNOWLEDGED BEFORE ME BY MEANS OF [X] PHYSICAL PRESENCE OR [] ONLINE NOTARIZATION, THIS 22 DAY OF April, 2024, BY VICE PRESIDENT, RAFAEL J. ROCA, ON BEHALF OF D.R. HORTON, INC., A DELAWARE CORPORATION, WHO IS [X] PERSONALLY KNOWN TO ME OR [] HAS PRODUCED _____ AS IDENTIFICATION.

MY COMMISSION EXPIRES:

SIGNATURE

Darlene deFaula
(PRINTED NAME) – NOTARY PUBLIC

(SEAL)

D.R. HORTON, INC.

SEAL

WGI
2035 Vista Parkway, West Palm Beach, FL 33411
Phone No. 866.909.2220 www.wginc.com
Cert No. 6091 - LB No. 7055

THIS INSTRUMENT WAS PREPARED BY KELSEY M. SMITH P.S.M., PROFESSIONAL SURVEYOR AND MAPPER, LICENSE NO. 7096 FOR THE FIRM: WGI, INC.

VINTAGE OAKS T1

LOCATED IN SECTION 14, TOWNSHIP 42 SOUTH, RANGE 41 EAST
CITY OF PALM BEACH GARDENS
PALM BEACH COUNTY, FLORIDA

APRIL 2024

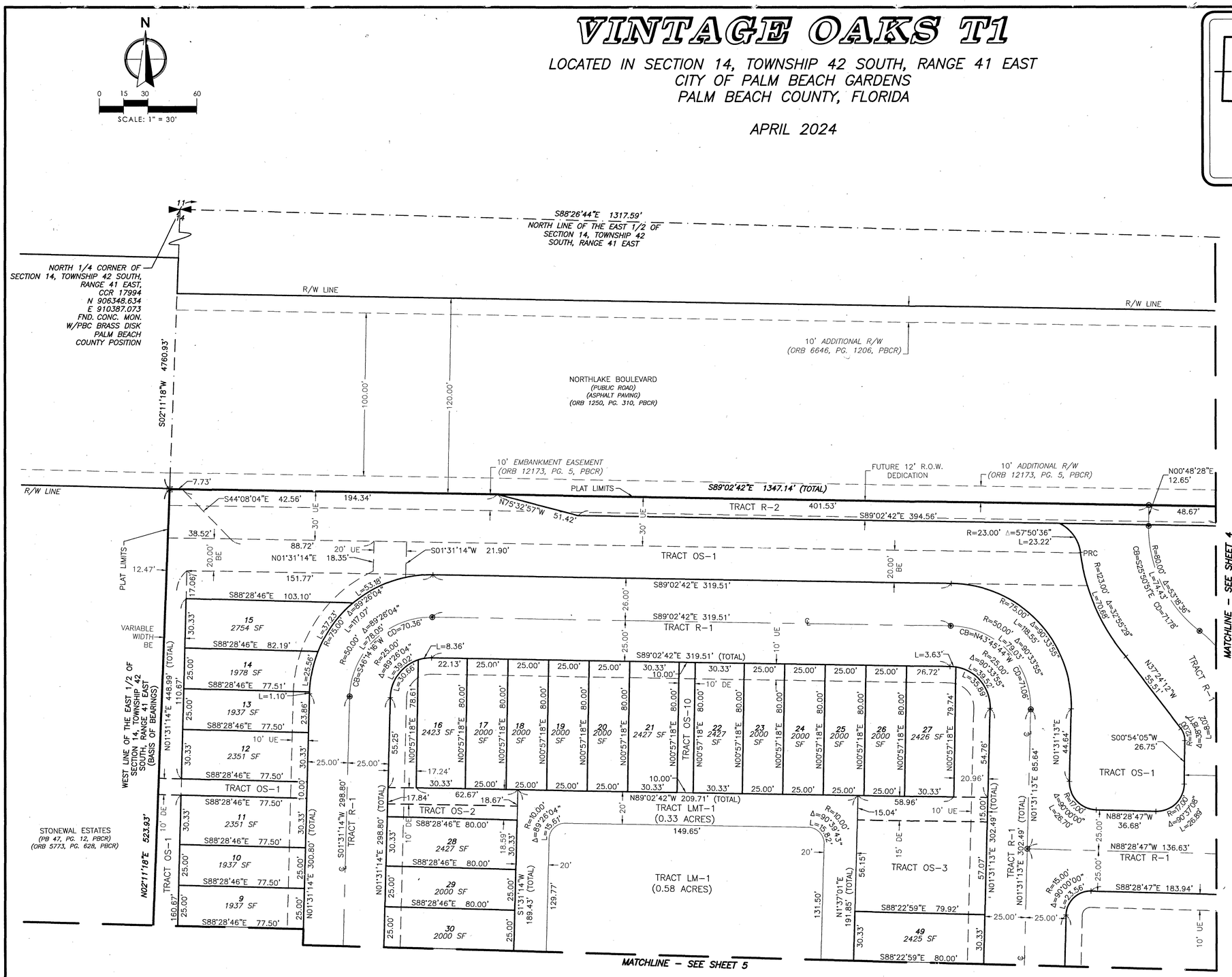

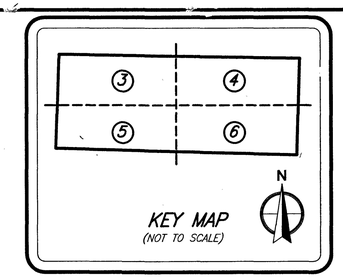

134

SHEET 3 OF 6 SHEETS

LEGEND

BE	=	Buffer Easement
C/L	=	Center Line
CCR	=	Certified Corner Record
CONC.	=	Concrete
CB	=	Chord Bearing
CD	=	Chord Distance
Δ	=	Delta (Central Angle)
DE	=	Drainage Easement
FND.	=	Found
L	=	Length of Arc
LMT	=	Lake Maintenance Tract
LSE	=	Lift Station Easement
NAD	=	North American Datum
ORB	=	Official Records Book
◎	=	Permanent Control Point (PCP)
PBCR	=	Palm Beach County Records
PG.	=	Page
PB	=	Plat Book
POB	=	Point of Beginning
POC	=	Point of Commencement
PRC	=	Point of Reverse Curvature
PRM	=	Permanent Reference Monument
R	=	Radius
R/W	=	Right-of-Way
SF	=	Square Feet
UE	=	Utility Easement
▩	=	Set 4"X4" Concrete (PRM) W/Aluminum Disc Stamped "LB 7055 PRM"

TRACT AREA TABULATION

TRACT	AREA (S.F.)
LM-1	25,447
LM-2	30,181
LMT-1	14,499
LMT-2	16,932
LST	1,500
OS-1	129,772
OS-2	2,690
OS-3	7,284
OS-4	2,374
OS-5	2,018
OS-6	4,280
OS-7	3,200
OS-8	1,664
OS-9	1,817
OS-10	800
OS-11	800
OS-12	800
OS-13	800
R-1	188,973
R-2	5,054
RA-1	34,525

WGI
2035 Vista Parkway, West Palm Beach, FL 33411
Phone No. 866.909.2220 www.wginc.com
Cert No. 6091 - LB No. 7055
THIS INSTRUMENT WAS PREPARED BY KELSEY M. SMITH P.S.M., PROFESSIONAL SURVEYOR AND MAPPER, LICENSE NO. 7096 FOR THE FIRM: WGI, INC.

VINTAGE OAKS T1

LOCATED IN SECTION 14, TOWNSHIP 42 SOUTH, RANGE 41 EAST
CITY OF PALM BEACH GARDENS
PALM BEACH COUNTY, FLORIDA

APRIL 2024

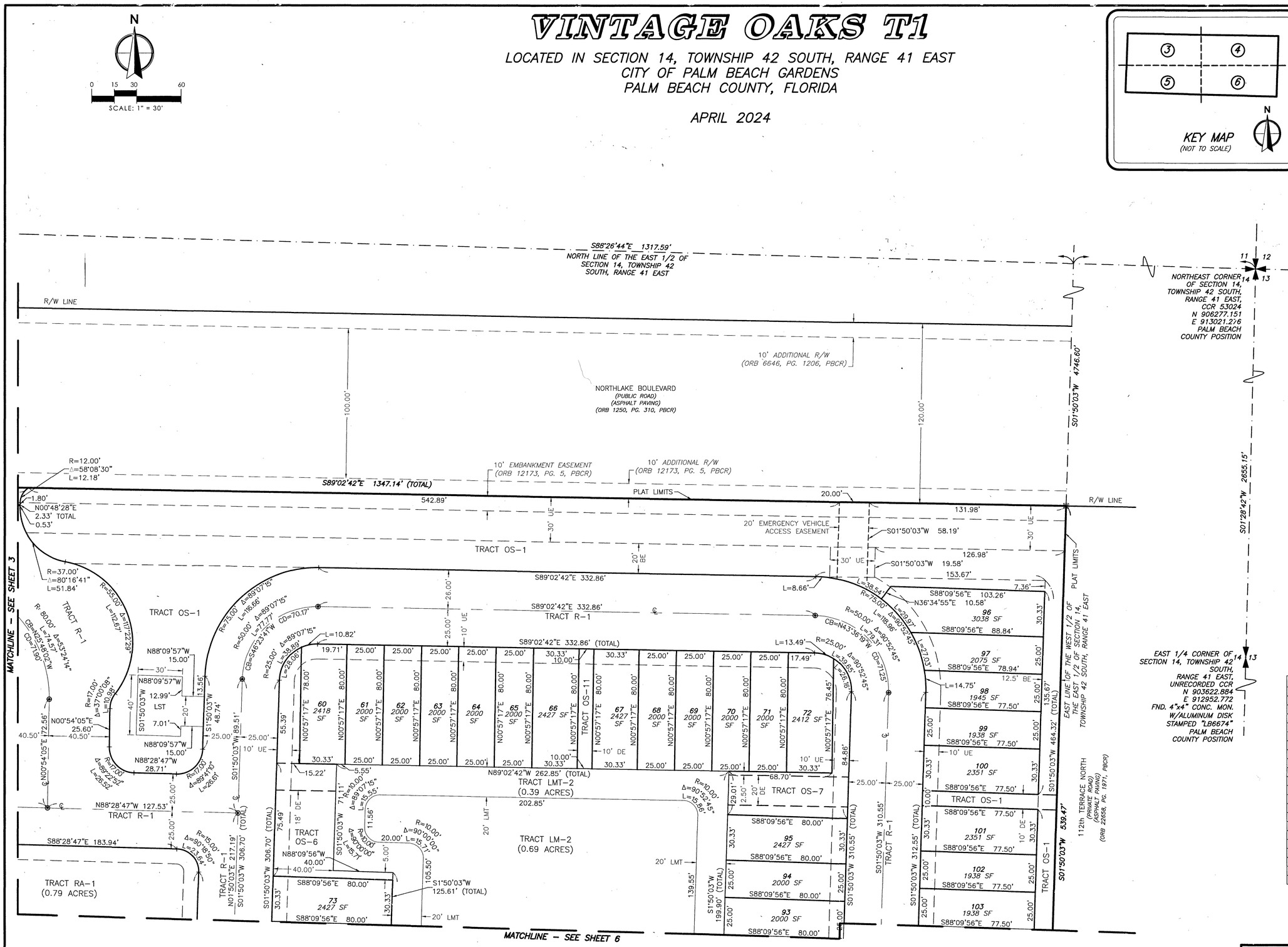

LEGEND

BE	=	Buffer Easement
C/L	=	Center Line
CCR	=	Certified Corner Record
CONC.	=	Concrete
CB	=	Chord Bearing
CD	=	Chord Distance
Δ	=	Delta (Central Angle)
DE	=	Drainage Easement
FND.	=	Found
L	=	Length of Arc
LMT	=	Lake Maintenance Tract
LSE	=	Lift Station Easement
NAD	=	North American Datum
ORB	=	Official Records Book
◎	=	Permanent Control Point (PCP)
PBCR	=	Palm Beach County Records
PG.	=	Page
PB	=	Plat Book
POB	=	Point of Beginning
POC	=	Point of Commencement
PRC	=	Point of Reverse Curvature
PRM	=	Permanent Reference Monument
R	=	Radius
R/W	=	Right-of-Way
SF	=	Square Feet
UE	=	Utility Easement
⊠	=	Set 4"X4" Concrete (PRM) W/Aluminum Disc Stamped "LB 7055 PRM"

TRACT AREA TABULATION

TRACT	AREA (S.F.)
LM-1	25,447
LM-2	30,181
LMT-1	14,499
LMT-2	16,932
LST	1,500
OS-1	129,772
OS-2	2,690
OS-3	7,284
OS-4	2,374
OS-5	2,018
OS-6	4,280
OS-7	3,200
OS-8	1,664
OS-9	1,817
OS-10	800
OS-11	800
OS-12	800
OS-13	800
R-1	188,973
R-2	5,054
RA-1	34,525

WGI
2035 Vista Parkway, West Palm Beach, FL 33411
Phone No. 866.909.2220 www.wginc.com
Cert No. 6091 - LB No. 7055

THIS INSTRUMENT WAS PREPARED BY KELSEY M. SMITH P.S.M., PROFESSIONAL SURVEYOR AND MAPPER, LICENSE NO. 7096 FOR THE FIRM: WGI, INC.

INDIAN TRAIL IMPROVEMENT DISTRICT
ADMINISTRATION DEPARTMENT

DISPOSITION OF SURPLUS REAL PROPERTY,

INCLUDING EASEMENTS

I. AUTHORITY

Chapter 2002-330, Laws of Florida (as amended), Section 5, authorizes the District "to convey *and dispose of* such real and personal property, either or both, as may be necessary or convenient to carry out the purposes, or any of the purposes, of this act and Chapters 298 and 153, Florida Statutes" (emphasis added), and Sec. 298.22(3), Florida Statutes.

II. GENERAL PURPOSE

To establish a policy regarding disposal of interests in District real property, including easements. As a general policy, the District currently owns or will acquire only those interests in real property that are "necessary and convenient" to carry out its legislative purposes and meet its functional needs. However, because of changing conditions or peculiar local circumstances, the District may own parcels or interests in real property that are not necessary or convenient for its purposes and may be declared surplus and disposed of in a manner that best serves the District's interests. This policy defines the terms under which District interests in real property may be disposed of.

III. POLICIES

1. For the purpose of this Policy, "surplus" shall mean an interest in real property that is not presently or foreseeably necessary or convenient to carry out the purposes and functions of the District.

2. For the purpose of this Policy, "disposition" shall include, but not be limited to, negotiated direct sale, sealed competitive bid, exchange, auction, or any other means of transfer of an ownership interest the Board of Supervisors deems appropriate, whether or not for consideration.

3. This Policy may be waived in whole or in part by the Board of Supervisors if disposition involves a transfer to another governmental unit for a public purpose.

4. Only *surplus* real property may be disposed of. The District Engineer will evaluate any request to dispose of real property, including easements, and will advise if

continued retention is necessary and convenient to satisfy the District's legislative purposes and functional requirements. If retention is determined by the Board not to be necessary or convenient, the Board of Supervisors may authorize appropriate disposition.

5. Unless otherwise provided in this Policy, no environmentally sensitive lands, as designated by the Florida Department of Environmental Protection (FDEP) or other governmental regulatory agency, shall be disposed of.

6. Unless otherwise provided in this Policy, disposition of an interest in District real property (including an exchange) shall be for valuable consideration. Transfer of property to a governmental entity for a public purpose may be without monetary consideration. If the property is to be transferred to an individual or commercial entity, the consideration shall be its fair market value. If the value of the property is estimated to exceed $100,000, market value shall be determined by independent appraisal.

7. If the surplus real property is owned in fee, the District may, if the District Engineer recommends, require reservation of an easement for District purposes. A purchaser will receive no extra compensation or reduction in fair-market value on account of such reservation.

8. For valuation purposes, an easement shall be treated the same as a fee simple interest.

IV. PROCEDURES

1. Any request for disposition of real property shall be in writing directed to the District Manager.

2. The request shall be accompanied by:

    a. A signed and sealed sketch and legal description of the property, if applicable; and

    b. A non-refundable application processing fee of $500.

3. All legal and engineering review fees shall be paid by the applicant before final consideration of the request by the Board of Supervisors.

Approved by the Indian Trail Improvement District Board of Supervisors at the 11/18/2015 Regular BOS Meeting

Frank Palen

From: Jay Foy <jfoystormj@gmail.com>
Sent: Friday, October 4, 2024 8:09 AM
To: Frank Palen; Burgess Hanson
Cc: Mary Viator; Scarlet Cantley
Subject: Vintage Oaks Release

Follow Up Flag: Follow up
Flag Status: Flagged

Frank,

Pursuant to our discussion, the Board adopted the policy for Disposition of Surplus Real Property in 2015. This policy specifically states:

"1. For the purpose of this Policy, "surplus" shall mean an interest in real property that is not presently or foreseeably necessary or convenient to carry out the purposes and functions of the District."

And

"4. Only *surplus* real property may be disposed of. The District Engineer will evaluate any request to dispose of real property, including easements, and will advise if continued retention is necessary and convenient to satisfy the District's legislative purposes and functional requirements. If retention is determined by the Board not to be necessary or convenient, the Board of Supervisors may authorize appropriate disposition."

As the District Engineer, it is my opinion that continued retention of the Real Property pursuant to the "First Amendment to and Partial Release of Drainage Service Agreement between ITID and Northlake 20, LLC" is not necessary and convenient to satisfy the District's legislative purposes and functional requirements.

Should you have any questions regarding this or need clarification, please respond.

Jay G Foy, P.E.
District Engineer

Prepared by and Return To:
Frank S. Palen, Esquire
Caldwell Pacetti Edwards Schoech & Viator LLP
1555 Palm Beach Lakes Boulevard, Suite 1200
West Palm Beach , Florida 3301

Property Control №: 52-41-42-14-14-015-0000

AMENDED AND RESTATED
DRAINAGE SERVICE AGREEMENT BETWEEN
INDIAN TRAIL IMPROVEMENT DISTRICT
AND
D.R. HORTON, INC.,
AS SUCCESSOR-IN-INTEREST TO
NORTHLAKE 20, LLC
(Non-Active Unit of Development No. ____)

THIS AMENDED AND RESTATED AGREEMENT (hereafter, alternatively the "Drainage Service Agreement" or the "Agreement") shall be effective as of the _____ day of _____, _____, 2024~~07~~, and is being entered into by and between the **INDIAN TRAIL IMPROVEMENT DISTRICT**, an independent special district of the State of Florida, whose address is 13476 61st Street North, West Palm Beach, Florida 33412 (hereafter referred to as ~~the~~ "District"), and **D. R. HORTON, INC**., a Delaware corporation registered to do business in the State of Florida, and successor-in-interest to Northlake 20, LLC, whose address is 6123 Lyons Road, Coconut Creek, Florida 33073 (hereafter referred to as "Landowner"). District and Landowner may hereafter be referred to collectively as the "Parties").~~**NORTHLAKE 20, LLC**., a Florida Limited Liability Company, whose address is 13676 Hamlin Boulevard, West Palm Beach, Florida 33412 (hereafter referred to as the "Landowner").~~

W I T N E S S E T H:

WHEREAS, ~~the~~ District is an independent special district created and operating in accordance with the provisions of Chapter 2002-330, Laws of Florida, as amended, and applicable provisions of Chapter 298, Florida Statutes (together the "Act"); and

WHEREAS, District is empowered by the Act to form Units of Development within its boundaries for the purpose of implementing, constructing, operating and maintaining drainage systems, water management facilities and other public improvements; and

WHEREAS, ~~the Landowner~~ Landowner is a ~~Florida limited liability company~~Delaware corporation registered to do business in the State of Florida; and

WHEREAS, on November 7, 2007, District and Northlake 20, LLC, executed a certain "Drainage Service Agreement" for the property described in the attached **Exhibit "A"** (the

~~H:\C&P Clients\Indian Trail\Agreements\Landowners & Developers\Northlake 20 LLC\ITID Northlake 20 LLC Agmt v 7 REDLINE 10-30-07.doc~~

"Property"), which was recorded on November 20, 2007 in Official Records Book 22269, Page 1465, of the Public Records of Palm Beach County, Florida, 100% of which Property has been acquired and is now owned entirely by Landowner; and

WHEREAS, while Northlake 20 LLC partially satisfied the requirements of the Drainage Agreement by causing the Property to be annexed into District's legislative boundaries for the purpose of providing drainage and other services, the professional office project originally proposed for the site did not proceed and the Property remained undeveloped until being acquired by Landowner; and

WHEREAS, among the commitments made in the Drainage Service Agreement by Northlake 20, LLC was the commitment to form a Unit of Development for the Property, upon which the District continues to rely; and

WHEREAS, Landowner acquired the Property from Northlake 20, LLC, subject to the terms of the Drainage Service Agreement, and has caused the Property to be annexed into the City of Palm Beach Gardens, which approved a revised development plan as a multi-family residential project styled "Vintage Oaks"; and

WHEREAS, in order to develop the Property as planned, Landowner requires an outlet for the Property's surface water management system by way of an indirect outfall connection (the "Connection") to District's Water Management System via Palm Beach County's surface water management system for Northlake Boulevard; and

WHEREAS, District is prepared to accommodate the proposed Connection and to provide perpetual drainage services to the Property subject to the terms and provisions of this Agreement and its adopted Drainage Policies and Procedures; and

WHEREAS, after such a long period of dormancy, the terms of the Drainage Service Agreement must be adjusted to accommodate Landowner's revised development plan and to reflect certain changes in District policies and procedures during the intervening years; and

~~**WHEREAS,** the Landowner owns the parcel of real property described on attached **Exhibit "A"** (the "Property"), which it intends to use for commercial purposes and which lies outside of but adjacent to the geographical boundary of the District; and~~

~~**WHEREAS,** the District currently owns and operates a surface water management system (the "Indian Trail Water Management System") within its geographical boundaries; and~~

~~**WHEREAS**, the District has adopted certain Polices & Procedures regarding provision of water management services for Non-Active Units of Development located outside its geographical boundaries to connect to the existing Indian Trail Water Management System; and~~

~~**WHEREAS**, in order to improve the Property, the Landowner requires an outfall for the Property's surface water management system and has requested the District to allow it to install an outfall connection (the "Connection") to the Indian Trail Water Management System; and~~

~~**WHEREAS**, the District is willing to accommodate installation of the Connection and to provide water management services to the Property on a continuing basis, but only in accordance with the terms and provisions of its adopted Policies and Procedures and of this Agreement.~~

WHEREAS, except as otherwise expressly agreed in this First Amendment, the terms of the Drainage Service Agreement shall remain in full force and effect, including but not limited to the Landowner's commitment to form a Unit of Development within the District.

NOW, THEREFORE, FOR VALUABLE CONSIDERATION~~in consideration of,~~ the ~~mutual covenants and promises hereafter set forth, the~~ receipt, ~~and~~ sufficiency and reaffirmation of which are~~is~~ hereby acknowledged, the P~~p~~arties agree as follows:

ARTICLE 1. RECITALS.

The above recitals are hereby true and correct to best of the knowledge of the parties hereto and are incorporated herein by this reference.

ARTICLE 2. AUTHORITY FOR AGREEMENT.

Each party to this Agreement ~~does~~ hereby acknowledges and agrees that they and their respective undersigned representatives have the lawful authority to execute and enter into this Agreement for the purposes reflected herein.

ARTICLE 3. DISTRICT'S UNDERSTANDINGS.

Permit Issuance.

(a) Subject to ~~the~~ Landowner's satisfaction and compliance with the requirements and provisions of this Agreement, ~~the~~ District shall issue the hereafter identified P~~p~~ermit for the installation of a Connection from the Property to the Indian Trail Water Management System via the drainage system operated by Palm Beach County for Northlake Boulevard.

(b) **Partial Release of Surplus District Encumbrance in the Property.** In order to allow Landowner to satisfy certain conditions of zoning approval, District agrees to partially release a 30-foot-wide strip along the north boundary of the Property (the "Release Area") from the encumbrance of the "Drainage Service Agreement" described in the attached **Exhibit "A"**. A legal description the Release Area is contained in the form of Partial Release is attached hereto as **Exhibit "B".** In consideration of this partial release, however, it is understood by the Parties that all surface water drainage from the Release Area shall be included in calculation of the Property's overall drainage for the Unit of Development's Water Control Plan.

ARTICLE 4. LANDOWNER'S UNDERSTANDINGS.

(a) The parties agree that they will use their best efforts to obtain approval from the Florida Legislature to change the District's legislative boundaries to include the Property. The Landowner hereby consents to the filing by the District in the next available legislative cycle of a local bill to the Florida Legislature to change the District's legislative boundaries. The District shall be exclusively responsible for determining the appropriate manner of filing and advancing the local bill. Landowner will cooperate with the District to the extent necessary to obtain legislative approval of such boundary adjustment, including the provision, if required, of consents from all affected landowners. The District shall prepare, at the Landowner's expense, any documentation reasonably required to pursue and support the petition. [CONDITION SATISFIED]

(b) It is the intent of the parties that the Property should become an aActive Unit of Development within the District. within five (5) years of execution of this Agreement. Landowner understands that the local bill to adjust the boundaries of the District may not be granted by the state Legislature. In addition to any other grounds for termination permitted by this Agreement, the District may terminate this Agreement: (1) if, despite diligent efforts by the parties to promote the local bill, legislative approval is not received within the two (2) annual legislative cycles following initial submittal of the local bill; or (2) if the District's Water Control Plan is not amended to incorporate the Property within five (5) years of execution of this Agreement. This Agreement shall remain in full force and effect until terminated. Landowner has in writing affirmed its intent to initiate and diligently pursue formation of a Unit of Development. The process of forming a Unit of Development is outlined in the attached **Exhibit "C".**

(c) The District shall, at Landowner's expense, initiate any changes to the District's Water Control Plans necessitated by this Agreement or by the addition of Landowner's Property to the District.

(d) Upon approval of the District boundary adjustment by the Legislature, Landowner shall promptly execute a Standard Landowner's Agreement for the Property, and District shall promptly initiate the process established therein to create an Active Unit of Development.

(de) Unless otherwise expressly agreed herein, this Agreement provides only for a Connection from the Property to the Indian Trail Water Management System and provision of continuing water management services by the District. The District does not hereby assume responsibility for maintenance of any water management systems or functions internal to the Property. The District shall have the right but not the obligation to maintain the outfall control structure.

(ef) Any and all costs and expenses of the District to effectuate this Agreement, which are to be borne by the Landowner, shall be reasonable and customary.

(f) All surface water drainage from the thirty-foot wide (30) area of the Property to be partially released from the encumbrance recorded on November 20, 2007 in Official Records Book

22269, Page 1465, of the Public Records of Palm Beach County, Florida, shall be included in calculation of the Project's overall drainage for the Unit of Development Water Control Plan.

ARTICLE 5. CONNECTION APPROVAL, CONSTRUCTION AND MAINTENANCE.

The Landowner shall be required to satisfy and comply with the following conditions and obligations as related to the approval, construction, operation and maintenance of the Connection and any affected District's works or facilities, namely:

(a) The Landowner shall be solely responsible for the proper and timely design, construction, installation, and subsequent maintenance of the Connection without recourse to the District.

(b) On or before ninety (90) calendar days ~~from the date on which a final site plan for the Property is approved by Palm Beach County and~~ prior to commencement of ~~the~~ installation of the Connection, the Landowner shall submit, on its own behalf, a properly completed and executed special permit application to the District, with accompanying signed and sealed plans and specifications for the proposed Connection, which permit application, if and when approved by the District, shall be the herein referenced "Permit". At a minimum, the District P~~p~~ermit ~~to be issued by the District~~ shall contain the conditions set forth on attached **Exhibit "D~~B~~"**.

(c) The proposed Connection and its intended use must satisfy and comply with all other governmental agencies' rules, regulations and permit requirements.

(d) The Connection shall not be installed until: (1) the District has approved and issued the Permit authorizing such Connection to the District Water Management System; (2) Landowner has paid in full the fees and charges due pursuant to Article 6, below; and (3) all other required governmental approvals and permits have been issued for the Connection and copies of same provided to the District. The Landowner shall use commercially reasonable efforts to obtain an amendment by Palm Beach County of its District drainage permit for Northlake Boulevard.

(e) Following installation of the Connection, the Landowner shall thereafter be responsible for all costs and expenses as may be necessary for its continued proper operation, repair and maintenance.

(f) The Landowner shall be responsible for payment of any costs that may be reasonably and necessarily incurred by the District for such design, permitting and/or construction of modifications to the ~~Indian Trail~~ District's Water Management System that must be carried out in order to allow for the installation of the Connection. These District costs and expenses may include but are not limited to such legal, administrative, surveying and engineering costs and expenses as may be incurred by the District in conjunction with such activity. They shall be paid within thirty (30) calendar days of the issuance by the District of a written invoice for payment of same to the Landowner.

(g) Landowner shall satisfy the District's Surface Water Management Policy, as it may be amended from time to time. ~~It is acknowledged that there must be a continuously operable control structure installed on the outfall that allows the District to shut and stop discharges on an~~

~~"as needed" basis. The District shall have exclusive authority to operate the control structure, subject to the terms and conditions of the Project's SFWMD permit. The legal right to access the control structure shall be conveyed to the District. Maintenance responsibility for the control structure shall remain that of Landowner or the POA. However, the District shall have the right, but not the obligation, to assume maintenance responsibility if in its opinion the control structure is not being properly maintained. If the District assumes maintenance responsibility, any additional costs of such service shall be assessed to the Landowner(s).~~

(h~~a~~) The Landowner understands that a readjustment or assessment of benefits as required by Section 298.55, Florida Statutes, as amended, may occur with regard to the Property.

ARTICLE 6. FEES AND CHARGES.

The Landowner shall be obligated to pay to the District the following fees and charges, namely:

(a) A non-refundable, lump sum reimbursement of such reasonable administrative, engineering and legal expenses as have been or will be incurred by the District for the preparation of this Agreement, payable within sixty (60) days of Landowner's execution of this Agreement.

(b) An Initial Advance in the amount of **FIFTEEN THOUSAND AND NO/100 DOLLARS ($15,000.00)**, payable at the time of Landowner's execution of this Agreement, which Initial Advance shall be applied to and used by the District for the expenses incurred pursuant to the requirements of Article 4, above. Subsequent costs shall be invoiced to the Landowner on a monthly basis as they accrue.

(c) A one-time, non-refundable Drainage Connection Fee in the amount of **~~SEVEN~~ SIX THOUSAND ~~FIVE HUNDRED~~ AND NO/100 DOLLARS** ($~~7,5~~6,000.00) per gross acre of the Property. The Connection Fee shall be the total sum of **NINETY-EIGHT~~ONE HUNDRED THIRTY-FOUR~~ THOUSAND SEVEN ~~ONE~~ HUNDRED SIXTY-SIX ~~NINETY FIVE~~ AND ~~50~~NO/100 DOLLARS ($~~134,195.50~~98,766.00)** (16.461~~7.893~~ acres x $~~7,5~~6,000 = $98,766~~134,195.50~~), payable prior to the issuance of the District's Permit.

~~(d) An annual access and usage fee (the "Annual Access Fee") which shall be assessed by the District on a per acre basis through the issuance of a written invoice to the Landowner, its successors or assigns. Invoices shall continue until such time as the Property is added to the District's annual non-ad valorem assessment roll.~~

~~(1) District staff will determine the acreages subject to the Annual Access Fee in accordance with the procedures of the Palm Beach County Tax Collector, discounting therefrom any real property acreage not subject to District assessments.~~

~~(2) The Annual Access Fee shall be due and payable from the date of Connection.~~

~~(3) If the Property is to be developed for residential purposes, the Landowner shall establish a property owners association ("POA") for the Property to which the Landowner shall assign the duty to pay the Annual Access Fee. Any Declaration of Covenants and Restrictions~~

~~applicable to the Property shall include the obligation to pay the Annual Access Fee as a common expense of the POA, which may assess its members therefor.~~

~~(4) The District shall send an invoice for the Annual Access Fee to the Landowner or, at the District's discretion, the POA, payment of which shall be a condition precedent to initial or continued Connection. The initial invoice shall be prorated for the balance of the District's then fiscal year. Thereafter, the invoice shall be issued on or about November 1st of each year, beginning on November 1st of the first calendar year following the District's issuance of a Permit for installation of the Connection.~~

~~(5) The Annual Access Fee shall be due, owing and paid on or before April 1st of the calendar year immediately following the year that the District written invoice for same has been issued to the Landowner~~

~~(6) The Annual Access Fee shall be due, determined and calculated in the same manner and at the same rate as the District for the annual assessment and levy of its non-ad valorem assessments on assessable real property within its representative unit of development for the M-1 Basin, Unit of Development No. M1-S.~~

~~(7) The Landowner's obligation to pay the Annual Access Fee shall cease at such time as the Property appears on District's non-ad valorem assessment roll. The parties acknowledge and agree however, that the Property cannot be included in the District's annual non-ad valorem assessment roll and/or Palm Beach County Tax Collector's Real Property tax bill until such time as the Property is legislatively included into the District and the District's Water Control Plan is approved and/or amended to include the Property.~~

~~(8) Once annexed into the District, the Property shall be subject to the same method of assessment and rate of non-ad valorem assessment as is or will be applied and levied annually by District upon other similarly sized or classified parcels of real property located within the District.~~

(e) All fees and charges at standard rate(s) that the District imposes for similar permit application submittal, reviews and processing.

ARTICLE 7. REQUIRED DISCLOSURES. Prior to its conveying, selling, transferring or leasing any interest in the Property, Landowner shall prepare and submit to District for approval the following disclosure statement(s).

(a) One disclosure statement must be in form substantially as follows:

"INDIAN TRAIL IMPROVEMENT DISTRICT IMPOSES ASSESSMENTS ON THIS PROPERTY THROUGH A SPECIAL TAXING DISTRICT. THESE ASSESSMENTS PAY THE CONSTRUCTION, OPERATION, AND MAINTENANCE COSTS OF CERTAIN PUBLIC FACILITIES OF THE DISTRICT AND ARE SET ANNUALLY BY THE GOVERNING BOARD OF THE DISTRICT. THESE ASSESSMENTS ARE IN ADDITION TO COUNTY AND ALL OTHER TAXES AND ASSESSMENTS PROVIDED FOR BY LAW."

This disclosure statement shall be prominently displayed and contained in all: (i) **purchase contracts** with prospective buyers by means of a separate paragraph in the Real Estate Contract immediately above the signature line for the purchaser, which paragraph must be in capital letters, bold-face type, and (ii) **contracts for leases** of real property within the Unit.

(b) Another similar disclosure statement shall appear in the applicable **homeowner's and/or property owner association documents**, including a Declaration of Covenants, if any. District shall be entitled to receive and Landowner agrees to provide to District such verification of the provision of the disclosure statement as the District deems necessary and appropriate, but in any event the disclosure statement shall, at a minimum, disclose the following: (i) that the Property is located within a District Unit of Development; (ii) the general nature and scope of Water Control Plan Improvements benefitting the property; (iii) District's involvement in the construction, financing, operation and/or maintenance of the Water Control Plan Improvements; (iv) that District will annually levy and collect Drainage Taxes upon the Property; (v) that these Drainage Taxes will be included in the Palm Beach County Tax Collector's annual Unified Real Property Tax Bill and collected by the Tax Collector; and (vi) if known, the approximate annual amount of the Drainage Taxes anticipated to be levied and assessed by the District upon the subject Property.

(c) Landowner acknowledges and consents to District's recording in the Public Record of Palm Beach County:

(1) A Notice and Disclosure of Taxing Authority statement which shall be generally in the format attached as **Exhibit "E"**; and

(2) (i) The Report of Engineer, including subsequent amendments thereto, if any, as are approved for the Unit; (ii) such Drainage Tax resolutions as may be adopted by District for the Unit; (iii) estimated annual non-ad valorem assessment notices; (iv) maintenance agreements; or (v) in the alternative, a memorandum referencing said instruments, which may include a general summary of the contents contained therein, plus their location and availability.

~~The Landowner shall disclose the existence of this Agreement to all subsequent purchasers, in a format acceptable to the District, which fully discloses the obligation of the Landowner's successors and assigns to pay annual pro-rata charges to the District and in the applicable Property Owner's Association's Declaration of Covenants. The Landowner, prior to its conveying, selling, transferring or leasing any interest in the Property, shall prepare and submit to The District for approval the following disclosure statement(s).~~

~~(a) One of the disclosure statements must be in form substantially similar to the following:~~

~~**"THE INDIAN TRAIL IMPROVEMENT DISTRICT IMPOSES ASSESSMENTS ON THIS PROPERTY THROUGH A SPECIAL TAXING DISTRICT. THESE ASSESSMENTS PAY THE CONSTRUCTION, OPERATION, AND MAINTENANCE COSTS OF CERTAIN PUBLIC FACILITIES OF THE DISTRICT AND ARE SET ANNUALLY BY THE BOARD OF SUPERVISORS OF THE DISTRICT. THESE ASSESSMENTS ARE IN ADDITION TO COUNTY AND ALL OTHER TAXES AND ASSESSMENTS PROVIDED FOR BY LAW."**~~

~~This disclosure shall be prominently displayed and contained in all: (i) sales brochures for all or any portion of the Property, (ii) purchase contracts with prospective buyers by means of a separate paragraph in the Real Estate Contract immediately above the signature line for the purchaser, which paragraph must be in capital letters and in contrasting or highlighted typeface and (iii) contracts for leases of land within the Property.~~

~~The other disclosure shall appear in any homeowner's and/or property owner association documents applicable to the Property, including a Declaration of Covenants, if any. The District shall be entitled to receive and the Landowner agrees to provide to the District such verification of the provision of the disclosure statement as the District deems necessary and appropriate, but in any event the disclosure statement shall, at a minimum, disclose the following: (1) the Property is presently located outside the boundaries of the District, but the District will provide water management services based on the terms of this Agreement; (2) the general nature an approximate location of the water management system improvements affected by this Agreement; (3) that the Developer has agreed to annex the Property into the District and to form an Active Unit of Development; (4) that until such time as the Property becomes an Active Unit of Development, the Property shall be subject to the Annual Access Fee for water management and drainage purposes provided herein; (5) that, once the Property is annexed to and becomes and Active Unit of Development within the District, the District will annually levy and collect non-ad valorem assessments for water management purposes upon the Property, (6) that these non-ad valorem assessments will be included in the Palm Beach County Tax Collector's annual Real Property Tax Bill and collected by the Tax Collector; (7) if known, the approximate annual amount of the non-ad valorem assessments anticipated to be levied and assessed by the District upon the Property; and (8) that subsequent or successor Landowners within the Property acknowledge and consent to the above disclosure requirements and shall not object to same.~~

ARTICLE 8. <u>DEFAULT REMEDIES.</u>

(a) In the event the Landowner should fail to timely comply with the terms, obligations and provisions of this Agreement, then in that event the District may, if it so elects, terminate this Agreement following the provisions of thirty (30) calendar days advanced written notice of such intent to terminate which notice shall reflect the nature of the basis for termination. During said thirty (30) day calendar period, the Landowner shall have the right to cure the item or items that are the basis for the District's issuance of the notice of termination.

(b) In the event the Landowner should fail to pay the Fees and Charges identified in Article 6 ("Fees and Charges"), including an Annual Access Fee, required by the terms and provisions of this Agreement, the District shall be entitled, in addition to all other available legal remedies, to the following cumulative and non-exclusive remedies and/or damages:

(1) To impose and collect simple interest at the rate of 18% per annum on the unpaid balance of any outstanding Fees and Charges, with said interest to commence to accrue on the day immediately following the due date.

(2) Following provision of 30 calendar days advance written notice to the Landowner (during which time any unpaid Fees and Charges may be paid in order to cure the default), to: (i) terminate this Agreement and discontinue the Connection to the Indian Trail Water Management System, or (ii) initiate such legal action as it deems necessary and appropriate to compel payment of the unpaid Fees and Charges, plus accrued interest and/or compliance with the terms and provisions of this Agreement. Any unpaid Fees and Charges, plus accrued interest, shall survive the termination of this Agreement and may be reduced to a judgment.

ARTICLE 9. <u>TERM; TERMINATION</u>.

Unless otherwise terminated as authorized in this Agreement, this Agreement shall continue for a term of ninety-nine (99) years from its Effective Date. Notwithstanding the foregoing, Landowner may terminate this Agreement for any reason with thirty (30) days prior notice to the District; provided, however, if as of the

termination date there are any outstanding the District claims~~ or invoiced Annual Access Fees~~, then in that event the enforcement provisions of the Agreement shall survive such termination

ARTICLE 10. MISCELLANEOUS PROVISIONS.

(a) **Notice**. All notices, amendments, requests, consents and other communications required or permitted under this Agreement shall be in writing (which shall include facsimile communications provided facsimile machine written confirmation of sending and delivery is obtained), hand delivered by prepaid express courier or messenger service, or mailed by registered or certificated mail (postage prepaid), return receipt requested, to the following addresses:

As to the District:

INDIAN TRAIL DISTRICT IMPROVEMENT DISTRICT
13476 61st Street North
West Palm Beach, Florida 33412
Attn: ~~District Administrator~~Executive Director
Telephone: (561) 793-0874
Facsimile: (561) 793-3716
E-Mail: bhanson@indiantrail.com

As to Landowner:

D. R. HORTON, INC.
6123 Lyons Road
Coconut Creek, FL 33073
Attn: Rafael Roca, Division President
Telephone: (954) 949-3015
Fax: (817) 928-6179
Email: rroca@drhorton.com

~~**NORTHLAKE 20, LLC**.~~
~~13676 Hamlin Boulevard~~
~~West Palm Beach, Florida 33412~~
~~Attn: Aldo Basile~~
~~Telephone: 561-791-7561~~
~~Facsimile: 561-791-7565~~
~~E-mail: akaservices@bellsouth.net.~~

(b) **Entire Agreement**. This Agreement constitutes the entire understanding and agreement between the parties with respect to the subject matter hereof and shall be a covenant running with the Property herein described.

(c) **Binding Effect**. All of the terms and provisions of this Agreement, whether so expressed or not, shall be binding upon, inure to the benefit of, and be enforceable by the parties and their respective legal representatives, grantees, successors, and permitted assigns.

(d) **Assignability**. Except as otherwise authorized in the Agreement, the Agreement or any its obligations may not be assigned without the prior written consent of both parties to this Agreement, which consent shall not be unreasonably withheld.

(e) **Severability**. If any part of this Agreement is contrary to, prohibited by or deemed invalid under applicable law or regulation, such provision shall be inapplicable and deemed omitted to the extent so contrary, prohibited or invalid, but the remainder hereof shall not be invalidated thereby and shall be given full force and effect so far as possible.

(f) **Governing Law and Venue**. This Agreement and all transactions contemplated by this Agreement shall be governed by, and construed and enforced in accordance with, the laws of the State of Florida without regard to any contrary conflicts of law principle. Venue of all proceedings in connection herewith shall lie exclusively in the Fifteenth Judicial Circuit in and for Palm Beach County, Florida, and each party hereby waives whatever its respective rights may have been in the selection of venue.

(g) **Non-Jury Trial**. The parties hereby waive any rights any of them may have to a jury trial in any litigation arising out of or related to this Agreement and agree that they shall not elect a trial by jury. The parties hereto have separately, knowingly and voluntarily given this waiver of right to trial by jury with the benefit of competent legal counsel.

(h) **Headings**. The headings contained in this Agreement are for convenience of reference only, and shall not limit or otherwise affect in any way the meaning or interpretation of this Agreement.

(i) **Effective Date**. The Effective Date of this Agreement shall be as of the last date of its signing by both of the parties hereto.

(j) **Enforcement of Remedies**. The failure of any party to insist on the strict performance of any of the terms and conditions hereof shall be deemed a waiver of the rights to remedies that the party may have regarding that specific instance only, and shall not be deemed a waiver of any subsequent breach or default in any terms or conditions.

(k) **Construction**. The parties acknowledge that each has shared equally in the drafting and preparation of this Agreement and, accordingly, no Court or Administrative Hearing Officer construing this Agreement shall construe it more strictly against one party than the other and every covenant, term and provision of this Agreement shall be construed simply according to its fair meaning.

(l) **Attorney's Fees**. It is hereby understood and agreed that in the event any lawsuit in the judicial system, federal or state, is brought to enforce compliance with this Agreement or interpret same, or if any administrative proceeding is brought for the same purposes, each party to said action shall be responsible for its own attorney's fees and costs, including appellate fees and costs.

(m) **Recording**. This Agreement shall be recorded in the public records of Palm Beach County, Florida

(n) **Counterparts**. This Agreement may be executed in one or more counterparts, each of which shall be deemed an original, but all of which together shall constitute the same instrument.

~~REMAINDER OF PAGE INTENTIONALLY LEFT BLANK~~SIGNATURES BEGIN ON FOLLOWING PAGE

IN WITNESS WHEREOF, the parties have executed this Agreement on the dates here~~in~~after written.

Executed by the **DISTRICT** this _____ day of _____, 2024 ~~07~~.

ATTEST:

By:_____

Secretary

INDIAN TRAIL IMPROVEMENT DISTRICT, an independent special district of the State of Florida

By:_____

President, Board of Supervisors

STATE OF FLORIDA)
) SS:
COUNTY OF PALM BEACH)

The foregoing instrument was acknowledged before me by means of ☐ physical presence or ☐ online notarization, this_____day of _____, 2024, by _____, as President of the Board of Supervisors of Indian Trail Improvement District, an independent special district of the State of Florida, who is ____ personally known to me or who has produced _____ as identification.

[Notary Seal]

_____
Notary Public, State of Florida

_____
Printed Name of Notary Public
My Commission expires:

Executed by **LANDOWNER** this _____ day of _____, 20__.

D.R. HORTON, INC., a Delaware corporation

By:_____
Rafael J. Roca, Vice President

STATE OF FLORIDA)
) SS:
COUNTY OF _____)

The foregoing instrument was acknowledged before me by means of ☐ physical presence or ☐ online notarization, this ___ day of _____, 2024, by Rafael J. Roca, as Vice President of D. R. Horton, Inc., a Delaware corporation, who is _____ personally known to me or who has produced _____ as identification.

[Notary Seal]

_____
Notary Public, State of Florida

_____
Printed Name of Notary Public
My Commission expires:

EXHIBIT "A"

LEGAL DESCRIPTION OF THE PROPERTY

THAT PORTION OF THE WEST ONE-HALF OF THE EAST ONE-HALF OF SECTION 14, TOWNSHIP 42 SOUTH, RANGE 41 WEST, PALM BEACH COUNTY, FLORIDA LYING SOUTH OF THE RIGHT-OF-WAY FOR WEST LAKE PARK ROAD (N/K/A/ NORTHLAKE BOULEVARD), LESS ADDITIONAL RIGHT-OF-WAY FOR NORTHLAKE BOULEVARD, AS DESCRIBED IN THAT CERTAIN ORDER OF TAKING RECORDED IN OFFICIAL RECORDS BOOK 12173, PAGE 5, OF THE PUBLIC RECORDS OF PALM BEACH COUNTY, FLORIDA.

(OVERALL AREA OF PROPERTY SURVEYED IS 17.893 ACRES, MORE OR LESS. AREA OF INCLUDED OVERLAP AREA IS 1.432 ACRES, MORE OR LESS.);

LESS AND EXCEPT,

Road Tract R-2, as shown on the Plat of Vintage Oaks T1, as recorded on May 2, 2024 in Plat Book 137, Page 132 of the Official Records of Palm Beach County, Florida.

EXHIBIT "B"
FORM OF PARTIAL RELEASE

Prepared by and
After recording, return to:
K. Michelle Jessell, Esquire
Nelson Mullins Riley & Scarborough LLP
1905 NW Corporate Blvd, Suite 310
Boca Raton, FL 33431

PARTIAL RELEASE
OF DRAINAGE SERVICE AGREEMENT
BETWEEN INDIAN TRAIL IMPROVEMENT DISTRICT
AND NORTHLAKE 20, LLC
(Tract R-2 and Utility Easement, Vintage Oaks T1 Plat)

THIS PARTIAL RELEASE OF DRAINAGE SERVICE AGREEMENT BETWEEN INDIAN TRAIL IMPROVEMENT DISTRICT AND NORTHLAKE 20, LLC (this "Partial Release"), is made as of September ___, 2024, by Indian Trail Improvement District, an independent special district of the State of Florida (the "District") and D.R. Horton, Inc., a Delaware corporation ("DHI"), as Successor-in-Interest to Northlake 20, LLC.

RECITALS:

WHEREAS, the District and Northlake 20, LLC, a Florida limited liability company, entered into a Drainage Service Agreement for the property described in Exhibit "A" (the "Property"), dated November 7, 2007 and recorded on November 20, 2007 in Official Records Book 22269, Page 1465, of the Public Records of Palm Beach County, Florida (the "Drainage Agreement").

WHEREAS, DHI is the current owner of the Property, and DHI is conveying a portion of the Property to Palm Beach County for road right-of-way and granting a easement to Palm Beach County for a sidewalk as more particularly described in Exhibit "B" attached hereto (the "Released Property"); and

WHEREAS, it is the intention of the District and DHI that the Released Property no longer be subject to the Drainage Agreement.

NOW THEREFORE, FOR VALUABLE CONSIDERATION, the receipt and sufficiency of which are hereby acknowledged, the District and DHI do hereby release and forever discharge the Released Property from the operation of the Drainage Agreement.

IT IS UNDERSTOOD AND AGREED that the Drainage Agreement shall otherwise remain in full force and effect.

WITNESS the execution of this Partial Release by the undersigned is made as of the date first above written.

ATTEST:

By:_____

Secretary

INDIAN TRAIL IMPROVEMENT DISTRICT, an independent special district of the State of Florida

By:_____

President, Board of Supervisors

STATE OF FLORIDA)
) SS:
COUNTY OF _____)

The foregoing instrument was acknowledged before me by means of ☐ physical presence or ☐ online notarization, this ___ day of_____, 20___, by _____, as President of the Board of Supervisors of Indian Trial Improvement District, an independent special district of the State of Florida, who is personally known to me or who has produced _____ as identification.

_____
Notary Public, State of Florida

_____
Printed Name of Notary Public
My Commission expires:

DHI:

D. R. HORTON, INC., a Delaware corporation

By:_____
Rafael J. Roca, Vice President

STATE OF FLORIDA)
) SS:
COUNTY OF _____)

The foregoing instrument was acknowledged before me by means of ☐ physical presence or ☐ online notarization, this ___ day of _____, 20_____, by Rafael J. Roca, as Vice President of D.R. Horton, Inc., a Delaware corporation, who is personally known to me or who has produced _____ as identification.

_____
Notary Public, State of Florida

_____
Printed Name of Notary Public

My Commission expires:

EXHIBIT "A"

LEGAL DESCRIPTION OF THE PROPERTY

THAT PORTION OF THE WEST ONE-HALF (W1/2) OF THE EAST ONE-HALF (E1/2) OF SECTION 14, TOWNSHIP 42 SOUTH, RANGE 41 EAST, PALM BEACH COUNTY, FLORIDA, LYING SOUTH OF THE RIGHT-OF-WAY FOR WEST LAKE PARK ROAD (N/K/A NORTHLAKE BLVD), LESS ADDITIONAL RIGHT-OF-WAY FOR NORTHLAKE BLVD AS DESCRIBED IN THAT CERTAIN ORDER OF TAKING RECORDED IN OFFICIAL RECORDS BOOK 12173, PAGE 5, OF THE PUBLIC RECORDS OF PALM BEACH COUNTY, FLORIDA.

EXHIBIT "B"
THE
RELEASED PROPERTY

TRACT R-2, VINTAGE OAKS TI, ACCORDING TO THE PLAT THEREOF, AS RECORDED IN PLAT BOOK 137, PAGE 132, OF THE PUBLIC RECORDS OF PALM BEACH COUNTY, FLORIDA.

THE THIRTY FOOT UTILITY EASEMENT LOCATED WITHIN TRACT OS-1, VINTAGE OAKS T1, ACCORDING TO THE PLAT THEREOF, AS RECORDED IN BOOK 137, PAGE 132, OF THE PUBLIC RECORDS OF PALM BEACH COUNTY, FLORIDA.

EXHIBIT "C"

PROCESS TO FORM A UNIT OF DEVELOPMENT

CALDWELL PACETTI
EDWARDS SCHOECH & VIATOR LLP

ATTORNEYS AT LAW

MANLEY P. CALDWELL, JR.
KENNETH W. EDWARDS
CHARLES F. SCHOECH
MARY M. VIATOR
FRANK S. PALEN
JAMES L. WATT
JOHN A. WEIG
MARGARET E. WOOD

OF COUNSEL
BETSY S. BURDEN

ONE CLEARLAKE CENTRE
250 SOUTH AUSTRALIAN AVENUE
SUITE 600
WEST PALM BEACH, FLORIDA 33401

PARALEGALS
MARY T. ADDONA
EMILIE PEARSON, CP

www.caldwellpacetti.com

TELEPHONE: (561) 655-0620
TELECOPIER: (561) 655-3775

MEMORANDUM

SUBJECT: Procedures to Form a Unit of Development, Approval of a Water Control Plan

---

The District is required to comply with the following procedures to construct a Water Control Plan for the District. This would involve the creation of a separate Unit of Development. The District would be required to go through the Water Control Plan approval process in accordance with Section 298.301, F.S., to approve the Plan. This Section provides that "notice, hearing and final adoption of a proposed water control plan or plan amendment must comply with the provisions of this Chapter".

The process for Unit Development and the Adoption of a Water Control Plan must be followed. This process includes the following:

I. Unit of Development: Formal creation of Unit of Development.

a. Request to Form Unit of Development

b. Board Meeting
- Adopt Resolution of Intent to form Unit

c. Advertise for Objections

d. Board Meeting
- Receive objections to formation of Unit
- Adopt Resolution Approving and Confirming Creation of Unit
- Authorization to prepare water control plan

II. Approval of Water Control Plan:

a. Engineer submits proposed Plan at Board of Supervisor's Meeting at which time the Board adopts the Resolution to consider adoption of the Plan.

b. Notice of Public Hearing on Proposed Plan is published following adoption of the Plan. (Once a week for three (3) consecutive weeks.)

c. Plan is delivered to South Florida Water Management District for review and comment which has sixty (60) days to comment.

d. Chapter 298.301 Notices are issued. Mail Notice to landowners, South Florida Water Management District, County Commission of County and any municipality in which District is located.

e. Public Hearing on Plan is conducted by the Board of Supervisors. Following the Public Hearing on the Plan, the Board would direct the Engineer to prepare the Engineer's Report.

f. Engineer prepares and circulates draft of the Engineer's Report.

g. Following completion of the Engineer's Report it is filed with the Secretary of the District.

h. Notice is published of the Public Hearing of Filing Engineer's Report and Plan. (Once a week for two (2) consecutive weeks with a twenty (20) day response period from date of last publication.)

i. A Public Hearing is held by the Board of Supervisors on the Report and Plan. South Florida Water Management comments are considered, if applicable.

j. Approval of Engineer's Report and Plan by Board of Supervisors.

We hope this information is helpful to you. Please let us know if you have any questions concerning the above.

EXHIBIT "D~~B~~"

SPECIAL CONDITIONS OF PERMIT APPROVAL*

1. The discharge from the Property for the design storm shall be processed through South Florida Water Management District to increase the District's allowable discharge by the same rate entering the District's system.

2. Prior to initiation of drainage services, LANDOWNER shall use commercially reasonable efforts to assure that Palm Beach County modifies its District drainage connection permit for Northlake Boulevard to reflect the Project's outfall. ~~The project control structure(s) shall be operable and under control of the District. The structure (s) shall be capable of shutting down discharge from the Property including no bleeder discharge for up to the one hundred (100) year three (3) day storm event. It shall also be operable to allow pre-storm drawdown to at least two (2) feet below the water control elevation.~~

3. The ~~perimeter grade shall be set at a minimum of the one hundred (100) year three (3) day storm event.~~Project shall satisfy the District's adopted Surface Water Management Policy, as it may be revised from time to time.

~~4. Water quality criteria may be satisfied with the use of a stormwater exfiltration system for commercial land uses. Water quality criteria may not be satisfied with the use of a stormwater exfiltration system for residential land uses. Water quality standards shall be attained by on-site storage of runoff. Credit for solids and voids storage is applicable for exfiltration systems in commercial land use areas, but quantity credit shall not be given for underground percolation.~~

~~5.~~4. ~~The Landowner~~ LANDOWNER shall pay all costs associated with the alteration of the District's SFWMD Environmental Resource Permit to allow for an increase in discharge into the Indian Trail Drainage System equal to the discharge from the Property.

~~6. The Landowner shall execute an agreement with the Bayhill POA ("Bayhill") or the Rustic Lakes POA ("Rustic Lakes") providing for an alteration of the Bayhill or Rustic Lake's agreement with the District to allow the conveyance of the Property's storm water discharge through the Bayhill or the Rustic Lakes Subdivisions to the Indian Trail Drainage System. Said agreement shall also be approved by ITID.~~

~~7.The Landowner shall execute an easement agreement approved by the District that provides for appropriate drainage access from the adjacent property currently owned by W & W IX, LLC.~~

* These conditions are not intended to be inclusive.

EXHIBIT "E"
NOTICE AND DISCLOSURE OF TAXING AUTHORITY

This Instrument Prepared by
and to be Returned to:

CALDWELL PACETTI EDWARDS SCHOECH & VIATOR LLP
1555 Palm Beach Lakes Blvd, Suite 1200
West Palm Beach, FL 33401

NOTICE AND DISCLOSURE OF TAXING AUTHORITY
BY
INDIAN TRAIL IMPROVEMENT DISTRICT
(Unit of Development Number ____)

INDIAN TRAIL IMPROVEMENT DISTRICT ("INDIAN TRAIL"), an independent special district and political subdivision of the State of Florida, has or intends to construct and/or maintain public facilities and improvements for the benefit of the real property described in attached **Exhibit "A",** which real property comprises INDIAN TRAIL's Unit of Development No. _____ (the "Unit").

As a result of INDIAN TRAIL's construction and/or maintenance of these public facilities and improvements, INDIAN TRAIL advises all present and future owners of real property within the Unit that they will be required to annually pay an amount to INDIAN TRAIL for the cost of constructing and/or maintaining these public facilities and improvements.

INDIAN TRAIL's annual bill to the owners of real property within the Unit will be shown, in addition to real property taxes and charges of other governmental entities, on the Real Property Tax Bill sent out around November of each year by the Palm Beach County Tax Collector.

If you should have any questions regarding this notice or your obligation to pay these charges, please write to INDIAN TRAIL IMPROVEMENT DISTRICT at 13476 61st Street North, West Palm Beach, Florida 33412-1915 or call Indian Trail's Executive Director at 561-793-0874.

Executed this _____ day of _____, 20__.

[DISTRICT SEAL] **INDIAN TRAIL IMPROVEMENT DISTRICT,** an Independent Special District of the State of Florida

ATTEST:

By: _____ By: _____

_____, Secretary _____, President

STATE OF FLORIDA)
) ss:
COUNTY OF PALM BEACH)

The foregoing instrument was executed before me this _____day of _____, 20__, by_____, as President of INDIAN TRAIL IMPROVEMENT DISTRICT, who is personally known to me.

[Notary Seal] Signature of person taking acknowledgment

Notary Public
Commission Number:
My Commission Expires:

AGENDA ITEM NO. 10.1

INDIAN TRAIL
IMPROVEMENT DISTRICT
EST. 1957

Executive Summary

REGULAR MEETING BOARD OF SUPERVISORS

DATE: January 15, 2025

SUBMITTED BY: Kenny Lawrence

DEPARTMENT: Parks

ITEM TYPE: Permits

AGENDA SECTION: **FACILITIES, PARKS & RECREATION AGENDA**

SUBJECT: Approval: Permit Applications for AAL Spring Season

BACKGROUND: The Acreage Athletic League has submitted the attached permit applications for the following "Spring Season" athletic programs. Detailed schedules and updated insurance will be attached to the final Permit for each sport, subject to legal and staff review.

The permit requests submitted are for Acreage Community Park North Athletic Campus.

COED Flag Football: (Youth)

Acreage Girls Softball: (Youth)

Acreage Elite Travel Football: (Youth)

Acreage Extreme Flag Football: (Adult)

FISCAL IMPACT: Fee Waiver Request (Subject to board approval)

RECOMMENDATION: Approval: Permit Applications for AAL Spring Season

---

ATTACHMENTS:
AAL - Sping Permit for COED Flag Football.pdf

AAL - Sping Permit for Acreage Girls Softball.pdf
AAL - Sping Permit for Acreage Extreme Flag Football.pdf
AAL - Sping Permit for Acreage Elite Travel Football.pdf

Outlook

Fwd: *NEW SUBMISSION* Indian Trail Improvement District Parks and Recreation Facility Use Permit Application New

From Acreage Athletic League <acreageathleticleague@gmail.com>
Date Mon 1/6/2025 4:10 PM
To Kenneth Lawrence <klawrence@indiantrail.com>

Excuse any typos as this is being sent from my iPhone

Begin forwarded message:

From: MaintReq@indiantrail.com
Date: January 3, 2025 at 6:03:05 PM EST
To: acreageathleticleague@gmail.com
Subject: *NEW SUBMISSION* Indian Trail Improvement District Parks and Recreation Facility Use Permit Application New

Indian Trail Improvement District Parks and Recreation Facility Use Permit Application New

Submission #:	3704983
IP Address:	99.152.254.78
Submission Date:	01/03/2025 6:03 PM
Survey Time:	47 minutes, 59 seconds

You have a new online form submission.
Note: all answers displaying "*****" are marked as sensitive and can be viewed after you login.

Facility Information

Read-Only Content

Type of Facility Requested

Multi-Purpose Field

Name of Facility Requested

Acreage Community Park

Is your organization 501(C) Not for profit, or Florida Non-Profit?

Yes

Read-Only Text

Name of Organization/Applicant

Acreage Athletic League

Email Address

acreageathleticleague@gmail.com

Full Address

7040 Seminole Pratt Whitney Road
PMB73 Suite 25,Florida 33470

Phone

(561) 603-9694

Read-Only Content

Name of Event

Acreage Flag Football

Description of Event

COED flag football for ages 4-18

Event Date

01/01/2025 12:00 AM

If you have selected a park pavilion, please select the time slot(s) you would like to rent:

If you have selected to host a special event, rent Hamlin House, or rent a sports field please enter the times you would like to rent, please keep in mind this does include set up and break down.

Enter the requested time(s) for your event

6pm - 9:15pm

Please answer all questions correctly. Unanswered questions may delay your request.

Special Requests

we are requesting 6pm - 9:15pm so that proper breakdown of fields can be done

Is this event advertised or open to the public?

Yes

Is this a fundraising event/revenue producing event?

No

Will there be soliciting or selling of any kind?

No

Will there be amplified sound at this event?

No

Will there be a bounce house at this event?

No

Will there be any type of display or advertizing at this event?

Yes

Will there be a charge to enter this event? (If yes, how much?)

No

$

Will alcohol be served at this event? (If yes what type)

No

Type of Alcohol

Will you be using a caterer for this event? (If yes please fill out the information below)

No

Contact info

Acreageathleticleague@gmail.com

Read-Only Content

If the applicant provides false information such as: purpose of event, names & addresses of event holder(s), number of persons in attendance, etc., the event may be cancelled prior or during the event at the discretion of the District Staff and may result in forfeiture of fees and deposits and/or denial of current and future applications for use of Department facilities and may incur additional District charges. *By signing below I certify that I have read and understand all the rules and regulations governing the use of the parks and facilities. I, the undersigned, do hereby agree that we will abide by the policies governing the use of the parks and will be responsible for any damages to the parks, facility, furniture, or equipment caused by our occupancy of the property. I understand that any false information provided or violation of any rules and policies will result in immediate cancellation of our event and will cause forfeiture of all fees and deposits.

Signature and Date

Wendy Rojas January 3, 2025

Thank you,
Indian Trail Improvement District, FL

This is an automated message generated by Granicus. Please do not reply directly to this email.

Facility Information

*****Any group or organization with larger than 10 participants utilizing our sports fields require a permit.*****

Receipt of the application is not a guarantee of facility use. Application will not be finalized until approved and executed by the Parks and Recreation Director or designee. Submit this application form online or in person to: 14893 89th pl N west Palm Beach Fl 33412.

The facility use application form is only available online

FACILITY USE POLICIES & PROCEDURES

RATES AND FEES

* **Type of Facility Requested**
Other

* **Name of Facility Requested**
Acreage Community Park

* **Is your organization 501(C) Not for profit, or Florida Non-Profit?**
Yes

Read-Only Text

* **Name of Organization/Applicant**
Acreage Athletic League

* **Email Address**
acreageathleticleague@gmail.com

* Full Address
7040 Seminole Pratt Whitney Rd
Loxahatchee, Florida 33470

Phone
(561) 603-9694

Event Details

* **Name of Event**
Acreage Girls Softball

* **Description of Event**
Acreage Girls Softball - permit requests would be for baseball field

* **Event Date**
01/14/2025

If you have selected a park pavilion, please select the time slot(s) you would like to rent:

If you have selected to host a special event, rent Hamlin House, or rent a sports field please enter the times you would like to rent, please keep in mind this does include set up and break down.

Enter the requested time(s) for your event
SKIPPED

Please answer all questions correctly. Unanswered questions may delay your request.

Special Requests
SKIPPED

* **Is this event advertised or open to the public?**

Yes

* **Is this a fundraising event/revenue producing event?**
No

* **Will there be soliciting or selling of any kind?**
No

* **Will there be amplified sound at this event?**
No

Will there be a bounce house at this event?
No

* **Will there be any type of display or advertizing at this event?**
No

* **Will there be a charge to enter this event? (If yes, how much?)**
No

$
SKIPPED

* **Will alcohol be served at this event? (If yes what type)**
No

Type of Alcohol
SKIPPED

* **Will you be using a caterer for this event? (If yes please fill out the information below)**
No

Contact info
acreageathleticleague@gmail.com

PLEASE READ CAREFULLY

INDIAN TRAIL FACILITY USE REQUIREMENTS AND CONSIDERATIONS

INDIAN TRAIL RULES_REGULATIONS_INDEMNIFICATION

BOUNCE HOUSE POLICY ACKNOWLEDGEMENT

If the applicant provides false information such as: purpose of event, names & addresses of event holder(s), number of persons in attendance, etc., the event may be cancelled prior or during the event at the discretion of the District Staff and may result in forfeiture of fees and deposits and/or denial of current and future applications for use of Department facilities and may incur additional District charges.

*By signing below I certify that I have read and understand all the rules and regulations governing the use of the parks and facilities. I, the undersigned, do hereby agree that we will abide by the policies governing the use of the parks and will be responsible for any damages to the parks, facility, furniture, or equipment caused by our occupancy of the property. I understand that any false information provided or violation of any rules and policies will result in immediate cancellation of our event and will cause forfeiture of all fees and deposits.

* **Signature and Date**
Wendy Rojas 1/6/25

Facility Information

*****Any group or organization with larger than 10 participants utilizing our sports fields require a permit.*****

Receipt of the application is not a guarantee of facility use. Application will not be finalized until approved and executed by the Parks and Recreation Director or designee. Submit this application form online or in person to: 14893 89th pl N west Palm Beach Fl 33412.

The facility use application form is only available online

FACILITY USE POLICIES & PROCEDURES

RATES AND FEES

* **Type of Facility Requested**
Multi-Purpose Field

* **Name of Facility Requested**
Acreage Community Park

* **Is your organization 501(C) Not for profit, or Florida Non-Profit?**
Yes

Read-Only Text

* **Name of Organization/Applicant**
Acreage Athletic League

* **Email Address**
acreageathleticleague@gmail.com

* Full Address
7040 Seminole Pratt Whitney Rd
Loxahatchee, Florida 33470

Phone
(561) 603-9694

Event Details

* **Name of Event**
Acreage Extreme Flag Football

* **Description of Event**
adult flag football

* **Event Date**
03/01/2025

If you have selected a park pavilion, please select the time slot(s) you would like to rent:

If you have selected to host a special event, rent Hamlin House, or rent a sports field please enter the times you would like to rent, please keep in mind this does include set up and break down.

Enter the requested time(s) for your event
SKIPPED

Please answer all questions correctly. Unanswered questions may delay your request.

Special Requests
adult flag football would run in the afternoon after COED flag football

* **Is this event advertised or open to the public?**

Yes

* **Is this a fundraising event/revenue producing event?**
No

* **Will there be soliciting or selling of any kind?**
No

* **Will there be amplified sound at this event?**
No

Will there be a bounce house at this event?
No

* **Will there be any type of display or advertizing at this event?**
Yes

* **Will there be a charge to enter this event? (If yes, how much?)**
No

$
SKIPPED

* **Will alcohol be served at this event? (If yes what type)**
No

Type of Alcohol
SKIPPED

* **Will you be using a caterer for this event? (If yes please fill out the information below)**
No

Contact info
Adult Flag football - running after coed in the afternoons

PLEASE READ CAREFULLY

INDIAN TRAIL FACILITY USE REQUIREMENTS AND CONSIDERATIONS

INDIAN TRAIL RULES_REGULATIONS_INDEMNIFICATION

BOUNCE HOUSE POLICY ACKNOWLEDGEMENT

If the applicant provides false information such as: purpose of event, names & addresses of event holder(s), number of persons in attendance, etc., the event may be cancelled prior or during the event at the discretion of the District Staff and may result in forfeiture of fees and deposits and/or denial of current and future applications for use of Department facilities and may incur additional District charges.

*By signing below I certify that I have read and understand all the rules and regulations governing the use of the parks and facilities. I, the undersigned, do hereby agree that we will abide by the policies governing the use of the parks and will be responsible for any damages to the parks, facility, furniture, or equipment caused by our occupancy of the property. I understand that any false information provided or violation of any rules and policies will result in immediate cancellation of our event and will cause forfeiture of all fees and deposits.

* **Signature and Date**
Wendy Rojas 1/6/25

Outlook

Fwd: *NEW SUBMISSION* Indian Trail Improvement District Parks and Recreation Facility Use Permit Application New

From Acreage Athletic League <acreageathleticleague@gmail.com>
Date Mon 1/6/2025 4:11 PM
To Kenneth Lawrence <klawrence@indiantrail.com>

Excuse any typos as this is being sent from my iPhone

Begin forwarded message:

From: MaintReq@indiantrail.com
Date: January 3, 2025 at 6:08:08 PM EST
To: acreageathleticleague@gmail.com
Subject: *NEW SUBMISSION* Indian Trail Improvement District Parks and Recreation Facility Use Permit Application New

Indian Trail Improvement District Parks and Recreation Facility Use Permit Application New

Submission #:	3704995
IP Address:	99.152.254.78
Submission Date:	01/03/2025 6:08 PM
Survey Time:	2 minutes, 27 seconds

You have a new online form submission.
Note: all answers displaying "*****" are marked as sensitive and can be viewed after you login.

Facility Information

Read-Only Content

Type of Facility Requested

Multi-Purpose Field

Name of Facility Requested

Acreage Community Park

Is your organization 501(C) Not for profit, or Florida Non-Profit?

Yes

Read-Only Text

Name of Organization/Applicant

Acreage Athletic League

Email Address

acreageathleticleague@gmail.com

Full Address

7040 Seminole Pratt Whitney Road
PMB73 Suite 25,Florida 33470

Phone

(561) 603-9694

Read-Only Content

Name of Event

Acreage Elite Travel Football

Description of Event

travel football league for participants from all Acreage Athletic league sports

Event Date

01/06/2025 12:00 AM

If you have selected a park pavilion, please select the time slot(s) you would like to rent:

If you have selected to host a special event, rent Hamlin House, or rent a sports field please enter the times you would like to rent, please keep in mind this does include set up and break down.

Enter the requested time(s) for your event

6pm - 9:15pm

Please answer all questions correctly. Unanswered questions may delay your request.

Special Requests

practices on Monday; Wednesday, Friday and Sundays

Is this event advertised or open to the public?

No

Is this a fundraising event/revenue producing event?

No

Will there be soliciting or selling of any kind?

No

Will there be amplified sound at this event?

No

Will there be a bounce house at this event?

No

Will there be any type of display or advertizing at this event?

No

Will there be a charge to enter this event? (If yes, how much?)

No

$

Will alcohol be served at this event? (If yes what type)

No

Type of Alcohol

Will you be using a caterer for this event? (If yes please fill out the information below)

No

Contact info

Acreageathleticleague@gmail.com

Read-Only Content

If the applicant provides false information such as: purpose of event, names & addresses of event holder(s), number of persons in attendance, etc., the event may be cancelled prior or during the event at the discretion of the District Staff and may result in forfeiture of fees and deposits and/or denial of current and future applications for use of Department facilities and may incur additional District charges. *By signing below I certify that I have read and understand all the rules and regulations governing the use of the parks and facilities. I, the undersigned, do hereby agree that we will abide by the policies governing the use of the parks and will be responsible for any damages to the parks, facility, furniture, or equipment caused by our occupancy of the property. I understand that any false information provided or violation of any rules and policies will result in immediate cancellation of our event and will cause forfeiture of all fees and deposits.

Signature and Date

Wendy Rojas January 3, 2025

Thank you,
Indian Trail Improvement District, FL

This is an automated message generated by Granicus. Please do not reply directly to this email.

AGENDA ITEM NO. 10.2

INDIAN TRAIL
IMPROVEMENT DISTRICT
EST. 1957

Executive Summary

REGULAR MEETING BOARD OF SUPERVISORS

DATE:	January 15, 2025
SUBMITTED BY:	Kenny Lawrence
DEPARTMENT:	Parks
ITEM TYPE:	Permits
AGENDA SECTION:	**FACILITIES, PARKS & RECREATION AGENDA**
SUBJECT:	Approval: Facility Use Permit for 143 Mind Body and Spirit
BACKGROUND:	143 Mind Body and Spirit would like to host their Wellness Wednesday meditation/sound healing event at the Hamlin House on 02/12/2025 from 6:30pm-8:30pm. They are estimating 15-20 people in attendance for the event. The event is open to the public and will cost $10 to attend.
FISCAL IMPACT:	Deposit: $200 Event Rental Fee: $100 ($50 per hour)
RECOMMENDATION:	Motion to approve 143 Mind Body and Spirit's permit request to use Hamlin House for their Wellness Wednesday meditation/sound healing class, subject to staff and legal review.

ATTACHMENTS:
143 Mind Body and Spirit - Permit_January 2025 board meeting.pdf

Facility Information

*****Any group or organization with larger than 10 participants utilizing our sports fields require a permit.*****

Receipt of the application is not a guarantee of facility use. Application will not be finalized until approved and executed by the Parks and Recreation Director or designee. Submit this application form online or in person to: 14893 89th pl N west Palm Beach Fl 33412.

The facility use application form is only available online

FACILITY USE POLICIES & PROCEDURES

RATES AND FEES

* **Type of Facility Requested**
Hamlin House

* **Name of Facility Requested**
Hamlin House

* **Is your organization 501(C) Not for profit, or Florida Non-Profit?**
No

Read-Only Text

* **Name of Organization/Applicant**
143 Mind Body and Spirit

* **Email Address**
movinmommy1@yahoo.com

* Full Address
13432 61st Lane N
West Palm Beach FL 33412

Phone
(561) 373-9176

Event Details

* **Name of Event**
Wellness Wednesday

* **Description of Event**
1 hour meditation/sound healing event 15-20 people

* **Event Date**
02/12/2025

If you have selected a park pavilion, please select the time slot(s) you would like to rent:

If you have selected to host a special event, rent Hamlin House, or rent a sports field please enter the times you would like to rent, please keep in mind this does include set up and break down.

Enter the requested time(s) for your event
6:30-8:30 pm

Please answer all questions correctly. Unanswered questions may delay your request.

Special Requests
none

* **Is this event advertised or open to the public?**

Yes

* **Is this a fundraising event/revenue producing event?**
No

* **Will there be soliciting or selling of any kind?**
No

* **Will there be amplified sound at this event?**
No

Will there be a bounce house at this event?
No

* **Will there be any type of display or advertizing at this event?**
No

* **Will there be a charge to enter this event? (If yes, how much?)**
Yes

$
10

* **Will alcohol be served at this event? (If yes what type)**
No

Type of Alcohol
SKIPPED

* **Will you be using a caterer for this event? (If yes please fill out the information below)**
No

Contact info
Justina 561-373-9176

PLEASE READ CAREFULLY

INDIAN TRAIL FACILITY USE REQUIREMENTS AND CONSIDERATIONS

INDIAN TRAIL RULES_REGULATIONS_INDEMNIFICATION

BOUNCE HOUSE POLICY ACKNOWLEDGEMENT

If the applicant provides false information such as: purpose of event, names & addresses of event holder(s), number of persons in attendance, etc., the event may be cancelled prior or during the event at the discretion of the District Staff and may result in forfeiture of fees and deposits and/or denial of current and future applications for use of Department facilities and may incur additional District charges.

*By signing below I certify that I have read and understand all the rules and regulations governing the use of the parks and facilities. I, the undersigned, do hereby agree that we will abide by the policies governing the use of the parks and will be responsible for any damages to the parks, facility, furniture, or equipment caused by our occupancy of the property. I understand that any false information provided or violation of any rules and policies will result in immediate cancellation of our event and will cause forfeiture of all fees and deposits.

* **Signature and Date**
Justina Garrison

AGENDA ITEM NO. 10.3

INDIAN TRAIL
IMPROVEMENT DISTRICT
EST. 1957

Executive Summary

REGULAR MEETING BOARD OF SUPERVISORS

DATE:	January 15, 2025
SUBMITTED BY:	Kenny Lawrence
DEPARTMENT:	Parks
ITEM TYPE:	Permits
AGENDA SECTION:	**FACILITIES, PARKS & RECREATION AGENDA**
SUBJECT:	Approval: Facility Use Permit for Seminole Ridge High School
BACKGROUND:	Seminole Ridge High School has requested to use Sycamore Parks volleyball court for the upcoming beach volleyball season. The season would start February 3rd, 2025, and run through April 18th, 2025, Monday through Thursday 3:30pm-5:00pm.
FISCAL IMPACT:	Fee Waiver Request. Regular Rental Fees Deposit $75 Rental Fee $25 per hour
RECOMMENDATION:	Motion to approve Seminole Ridge High School permit request to use Sycamore Park for their beach volleyball season, subject to staff and legal review.

ATTACHMENTS:
Seminole Ridge High School - Permit for Sycamore Park.pdf

Facility Information

*****Any group or organization with larger than 10 participants utilizing our sports fields require a permit.*****

Receipt of the application is not a guarantee of facility use. Application will not be finalized until approved and executed by the Parks and Recreation Director or designee. Submit this application form online or in person to: 14893 89th pl N west Palm Beach Fl 33412.

The facility use application form is only available online

FACILITY USE POLICIES & PROCEDURES

RATES AND FEES

* **Type of Facility Requested**
Other

* **Name of Facility Requested**
Sycamore Park

* **Is your organization 501(C) Not for profit, or Florida Non-Profit?**
Yes

Read-Only Text

* **Name of Organization/Applicant**
Seminole Ridge High School

* **Email Address**
james.gailey@palmbeachschools.org

* Full Address
4601 Seminole Pratt Whitney Rd
Loxahatchee, FL 33470

Phone
(561) 876-2719

Event Details

* **Name of Event**
Girls Beach Volleyball

* **Description of Event**
Our Seminole Ridge Girls High School Beach volleyball team will use the sand courts 3-4 times a week for our beach volleyball season.

* **Event Date**
02/03/2025

If you have selected a park pavilion, please select the time slot(s) you would like to rent:

If you have selected to host a special event, rent Hamlin House, or rent a sports field please enter the times you would like to rent, please keep in mind this does include set up and break down.

Enter the requested time(s) for your event
330- 5 pm Monday - Thursday

Please answer all questions correctly. Unanswered questions may delay your request.

Special Requests
The Seminole Ridge HS girls beach volley ball team would like to use the courts at Sycamore Park for their beach volleyball season. Mostly for practice but there will be 4-5 games also.

* **Is this event advertised or open to the public?**
Yes

* **Is this a fundraising event/revenue producing event?**
No

* **Will there be soliciting or selling of any kind?**
No

* **Will there be amplified sound at this event?**
No

Will there be a bounce house at this event?
No

* **Will there be any type of display or advertizing at this event?**
No

* **Will there be a charge to enter this event? (If yes, how much?)**
No

$
SKIPPED

* **Will alcohol be served at this event? (If yes what type)**
No

Type of Alcohol
SKIPPED

* **Will you be using a caterer for this event? (If yes please fill out the information below)**
No

Contact info
SKIPPED

PLEASE READ CAREFULLY

INDIAN TRAIL FACILITY USE REQUIREMENTS AND CONSIDERATIONS

INDIAN TRAIL RULES_REGULATIONS_INDEMNIFICATION

BOUNCE HOUSE POLICY ACKNOWLEDGEMENT

If the applicant provides false information such as: purpose of event, names & addresses of event holder(s), number of persons in attendance, etc., the event may be cancelled prior or during the event at the discretion of the District Staff and may result in forfeiture of fees and deposits and/or denial of current and future applications for use of Department facilities and may incur additional District charges.

*By signing below I certify that I have read and understand all the rules and regulations governing the use of the parks and facilities. I, the undersigned, do hereby agree that we will abide by the policies governing the use of the parks and will be responsible for any damages to the parks, facility, furniture, or equipment caused by our occupancy of the property. I understand that any false information provided or violation of any rules and policies will result in immediate cancellation of our event and will cause forfeiture of all fees and deposits.

* **Signature and Date**
James Gailey 11/6/2024

AGENDA ITEM NO. 10.4

INDIAN TRAIL
IMPROVEMENT DISTRICT
EST. 1957

Executive Summary

REGULAR MEETING BOARD OF SUPERVISORS

DATE:	January 15, 2025
SUBMITTED BY:	Kenny Lawrence
DEPARTMENT:	Parks
ITEM TYPE:	Permits
AGENDA SECTION:	**FACILITIES, PARKS & RECREATION AGENDA**
SUBJECT:	Approval: Facility Use Permit for The Academy of Dance and Acrobatics
BACKGROUND:	The Academy of Dance and Acrobatics would like to temporarily host their dance classes at the Hamlin House on 01/20/2025 through 1/31/25 from 3:00pm-8:00pm while final construction inspections are completed at their location. The classes will cost $15 to attend.
FISCAL IMPACT:	Deposit: $200 Rental Fee: $2,000
RECOMMENDATION:	Motion to approve The Academy of Dance and Acrobatics permit request to use Hamlin House for their dance classes, subject to staff and legal review.

ATTACHMENTS:
The Academy of Dance and Acrobatics - Hamlin House Permit.pdf

Facility Information

*****Any group or organization with larger than 10 participants utilizing our sports fields require a permit.*****

Receipt of the application is not a guarantee of facility use. Application will not be finalized until approved and executed by the Parks and Recreation Director or designee. Submit this application form online or in person to: 14893 89th pl N west Palm Beach Fl 33412.

The facility use application form is only available online

FACILITY USE POLICIES & PROCEDURES

RATES AND FEES

* **Type of Facility Requested**
Hamlin House

* **Name of Facility Requested**
Hamlin House

* **Is your organization 501(C) Not for profit, or Florida Non-Profit?**
No

Read-Only Text

* **Name of Organization/Applicant**
The academy of dance and acrobatics

* **Email Address**
theacademyofdanceandacrobatics@gmail.com

* Full Address
13084 74th st n
West palm beach Fl 33412

Phone
(561) 358-3688

Event Details

* **Name of Event**
Dance class

* **Description of Event**
Temporarily use the Hamlin house on weekday evenings for dance classses until our new location in Westlake passes all permits and gets C/o. Hopefully just for the month of January 1/20-1/31

* **Event Date**
01/20/2025

If you have selected a park pavilion, please select the time slot(s) you would like to rent:
4pm-7pm

If you have selected to host a special event, rent Hamlin House, or rent a sports field please enter the times you would like to rent, please keep in mind this does include set up and break down.

Enter the requested time(s) for your event
3:00-8:00pm

Please answer all questions correctly. Unanswered questions may delay your request.

Special Requests
SKIPPED

* **Is this event advertised or open to the public?**
No

* **Is this a fundraising event/revenue producing event?**
No

* **Will there be soliciting or selling of any kind?**
No

* **Will there be amplified sound at this event?**
No

Will there be a bounce house at this event?
No

* **Will there be any type of display or advertizing at this event?**
No

* **Will there be a charge to enter this event? (If yes, how much?)**
Yes

$
15

* **Will alcohol be served at this event? (If yes what type)**
No

Type of Alcohol
SKIPPED

* **Will you be using a caterer for this event? (If yes please fill out the information below)**
No

Contact info
SKIPPED

PLEASE READ CAREFULLY

INDIAN TRAIL FACILITY USE REQUIREMENTS AND CONSIDERATIONS

INDIAN TRAIL RULES_REGULATIONS_INDEMNIFICATION

BOUNCE HOUSE POLICY ACKNOWLEDGEMENT

If the applicant provides false information such as: purpose of event, names & addresses of event holder(s), number of persons in attendance, etc., the event may be cancelled prior or during the event at the discretion of the District Staff and may result in forfeiture of fees and deposits and/or denial of current and future applications for use of Department facilities and may incur additional District charges.

*By signing below I certify that I have read and understand all the rules and regulations governing the use of the parks and facilities. I, the undersigned, do hereby agree that we will abide by the policies governing the use of the parks and will be responsible for any damages to the parks, facility, furniture, or equipment caused by our occupancy of the property. I understand that any false information provided or violation of any rules and policies will result in immediate cancellation of our event and will cause forfeiture of all fees and deposits.

* **Signature and Date**
Hope Powell 1/7/25

AGENDA ITEM NO. 11.1

INDIAN TRAIL
IMPROVEMENT DISTRICT
EST. 1957

Executive Summary

REGULAR MEETING BOARD OF SUPERVISORS

DATE:	January 15, 2025
SUBMITTED BY:	Scarlet Cantley
DEPARTMENT:	Administration
ITEM TYPE:	Minutes
AGENDA SECTION:	**CONSENT AGENDA**
SUBJECT:	Approval: June 5, 2024 - Regular Board Meeting Minutes
BACKGROUND:	
FISCAL IMPACT:	
RECOMMENDATION:	Motion to approve the June 5, 2024 - Regular Board Meeting Minutes.

ATTACHMENTS:
Final 2024-0605 - Regular Board Meeting Minutes.pdf

MINUTES OF REGULAR BOARD MEETING OF THE
BOARD OF SUPERVISORS
INDIAN TRAIL IMPROVEMENT DISTRICT
June 5, 2024

A Regular Meeting of the Board of Supervisors of Indian Trail Improvement District was held at 6:00 p.m. on June 5, 2024, located at the District Administration Building, 13476 61st Street North, West Palm Beach, FL 33412. This Meeting was in-person and used the Zoom Webinar Meeting platform for public participation. Present during the Meeting were Supervisors: Elizabeth Accomando, Patricia Farrell, Keith Jordano, Betty Argue, and Michael Johnson. Also, in attendance were: Burgess Hanson, Executive Director; Robert Robinson, Assistant Executive Director; Kenny Lawrence, Facilities, Parks and Recreation Director; Miriam Heisser, Chief Human Resources Officer; Scarlet Cantley, Administration and Grants Coordinator; Carey Nelson, IT/Social Media Specialist; Mary M. Viator, Esquire and Frank Palen, Esquire of Caldwell Pacetti Edwards Schoech & Viator LLP; Lara Donlon of Torcivia, Donlon, Goddeau & Rubin, P.A.; and Engineer Jay Foy, P.E. of Stormwater J Engineering, Inc. Special Guests in attendance were: J. Michael Burman, Esquire, and Bernard Ledbedeker, Esquire of Reid Burman Lebedeker Xenick and Pepin; and Lieutenant Darla Sauers, PBSO.

CALL TO ORDER

President Accomando called the Meeting to Order, led in the Pledge of Allegiance, and called Roll.

4.1 PRESIDENT'S WELCOMING REMARKS

President Accomando welcomed everyone and asked for all cell phones to be placed on silence. She reminded everyone present to fill out and submit a Comment Card to address the Board.

4.2 SUPERVISOR'S WELCOMING REMARKS

Supervisors welcomed everyone in attendance and asked everyone to be civil.

There were no further Supervisor Welcoming Remarks.

5. AGENDA APPROAVAL

President Accomando called for any additions, deletions or changes to the Agenda.

President Accomando requested SRG Update be moved from Staff Update to Item 6.1A and allow Public Comment at that time.

Supervisor Argue suggested moving the SRG Update to Item 7.A before Item 7.1 for Board discussion and direction. Supervisor Jordano agreed with Supervisor Argue.

A motion was made by Supervisor Argue, seconded by Supervisor Farrell, and unanimously passed to approve the Agenda, as amended, moving SRG Update to Item 7.A and allowing for Public Comment.

6. PRESENTATIONS

6.1 Presentation by Bernard Ledbedeker, Esquire

Mr. Hanson introduced Mr. Ledbedeker and Mr. Burman as District Counsel representing the District in the SID/Minto Litigation. Mr. Hanson noted Mr. Ledbedeker and Mr. Burman were present to speak specifically to the Final Order of the Court and the next steps in the process. Mr. Hanson stated the outcome was a victory for the District and the Landowners.

Mr. Ledbedeker congratulated the District on the Litigation win. He provided a brief overview of the case from the beginning when the District was sued by SID/Minto to the end when the Judge ruled on the case. He recapped the purpose of the lawsuit was for SID/Minto to gain access to Persimmon and 140th.

.

Mr. Ledbedeker explained the Judge ruled in two separate orders. He noted the Court granted a Summary Judgement which means the facts of the case are so clear and the law is in your favor that there is no need to hold a trial. He summarized the Court's findings stating Indian Trail's roads belong to Indian Trail and are funded by the residents of Indian Trail. He further explained even though the roads were open for travel purposes to everyone, it did not mean SID or Minto could connect to Indian Trail roads however they wish to use the roads. Mr. Ledbedeker stated the Court entered a Final Judgement to this effect; therefore, standing as a bar to future efforts to connect to Indian Trail roads without applying for a permit and paying a reasonable fee.

Mr. Ledbedeker stated Indian Trail during the course of the litigation spent quite a bit of money on expert witness fees, transcripts, and serving subpoenas. He noted Indian Trail spent approximately $480,000 in costs. He explained when a lawsuit is won, the winner receives the bulk of the costs back. Mr. Ledbedeker stated he was going to file a Motion to Tax Costs the following week with the bulk of the costs falling within non-discretionary categories. He anticipated the Cost Hearing to take place in June or July.

Mr. Ledbedeker stated Minto's expectation to utilize Indian Trail roads was due to the County's approval for Minto to either establish connections or pay the County $18 Million. He noted in anticipation of Minto appealing the decision of the Court, Indian Trail has located Appellate Counsel.

Mr. Ledbedeker stated he would let the District and its Residents know how much Costs are recovered as well as the Status of the Appellate process.

Mr. Burman and Mr. Ledbedeker gave thanks to the Board and Staff.

The Board thanked Mr. Burman and Mr. Ledbedeker for their hard work.

<u>6.2 Presentation by the Equestrian Trail and Infrastructure Advisory Committee (ETIAC)</u>

Supervisor Farrell, the non-voting chair of the Committee, stated the Committee had some items for the Board's consideration: getting more signs along 140th and 40th; and fencing along the trail on 130th. She noted there were new faces, renewed enthusiasm, positive input and thought for suggested changes to the equestrian area.

There was discussion regarding turquoise vs yellow signs. Supervisor Farrell stated the Committee wanted to keep the turquoise color and have it be associated with Equestrian throughout the District. Mr. Hanson confirmed the District would still use yellow signs when needed because of DOT standards; however, the turquoise color will be utilized for the equestrian signs and painted horse crosswalks throughout the District.

Supervisor Argue reiterated concerns regarding color blindness and turquoise. Mr. Hanson stated he would investigate the issue, but the horse and larger lettering on the sign was one solution.

6.3 PBSO Update – Lieutenant Darla Sauers

Lieutenant Sauers reviewed the accident report with the Board. Supervisor Farrell asked for the cause of accidents, and if accidents were due to excessive speeding? Lieutenant Sauers confirmed she could get the information for the Board.

Mr. Hanson confirmed Staff could do traffic counts on District roads. He also explained PBSO provides a report on a monthly basis.

Supervisor Argue suggested having CAPTEC do a high crash location evaluation. Supervisor Farrell stated the information would be good to share with the County regarding more stop signs and lower speed limits.

President Accomando thanked Lieutenant Sauers.

6.4 Fire Rescue Update – District Chief Amanda Vomero

Neither District Chief Vomero nor Battalion Chief Abdelnour could make it to the meeting; however, the Report was included in the Agenda backup.

7. REGULAR AGENDA

7.A SRG Update

Mr. Hanson recapped Board Direction to reach out to GL Homes and the County to come back with information for the Board regarding the next steps. Mr. Hanson confirmed President Accomando, Mr. Foy, Mr. Robinson, and he had met with GL Homes, while he and Mr. Foy had met with Mr. Ricks, County Engineer and Ms. Baker, County Administrator.

Mr. Hanson confirmed GL Homes had agreed to install new pipe for an agricultural culvert wet. Staff did not agree or disagree; however, they had concerns regarding the safety of the agricultural culvert. Staff stated GL Homes would need to submit plans through a special permit because they are connecting via District owned property.

Mr. Hanson stated the other concern with a wet installation was the length of the pipe or pipes and not confirming the ground under the pipe potentially allowing the pipe to shift. He noted installation of a pipe and not meeting current District Standards there was a legal concern regarding potential future liability.

Mr. Hanson stated he wanted to send a letter to the residents of SRG asking if they wanted a culvert re-installed at this location. Residents would indicate yes or no, sign and return the letter to the District. Mr. Hanson explained this would provide an accurate count as to how many residents wanted the culvert reinstalled. The cost of the replacement could be included in the letter. Mr. Hanson stated once letters were received Staff could bring back the information and the Board could give direction. He also noted residents of Sunny Urban Meadows had given input as to wanting the culvert reinstalled; therefore, the Board should consider at least a partial activation to

help pay for the reinstallation of the culvert to District standards as well as any maintenance to Carol Street.

He noted the reinstallation and maintenance should not fall solely on the backs of SRG residents. He reiterated it was a Board Policy decision.

President Accomando agreed it was important to hear from every resident as to the reinstallation of the culvert. She recapped her meeting with Mr. Portnoy for the Board stating GL Homes needed to submit Engineer stamped and sealed Plans as a part of the Special Permit. President Accomando also asked if GL Homes would provide the amount of funds to reinstall the agricultural culvert in accordance with the District standard reinstallation. She stated GL Homes had agreed.

President Accomando stated GL Homes was expecting the cost for installing an agricultural culvert to be $50,000 to $55,000.

Mr. Hanson stated Staff originally had estimated $340,000 based on a 120-foot-long pipe; however, Mr. Foy, Mr. Robinson and Mr. Lester are looking at either a 100- or 80-foot pipe. He confirmed a final cost had not been reached, but the cost would be lower than the original estimate.

Mr. Foy stated if the culvert was reinstalled to Indian Trail standards the pipe length would be 120 feet. If the pipe was shortened guard rails would need to be used. He reiterated design would be evaluated through a Special Permit Application. Mr. Foy stated he had not evaluated the process and cost of the District reinstalling the culvert because other steps like activating Sunny Urban Meadows would have to occur first and that would take a year requiring a Water Control Plan.

Mr. Foy stated the standard process was to dewater, put fill and compact around the pipe for support. He explained if the pipe was installed without the support the pipe would flex. He noted if the pipe was a special arch type then wet installation was possible.

President Accomando stated the special arch pipe was not what GL Homes was proposing for wet reinstallation of the culvert. She noted at the time the original culvert was installed it was mostly agricultural use but the District had to consider the future use.

Supervisor Argue stated the District needed to send out a letter regarding the cost with the culvert and without the culvert. She noted the cost to landowners off of 189th was expensive but the District needed to be consistent. She stated there would be a cost of $3,500 per year to SRG residents for road maintenance or a $3,500 one-time fee to reinstall the culvert to District standards.

President Accomando stated there was an inactive unit using Carol and Louise Streets. She stated if GL Homes received the land swap proposal, Indian Trail did not know what could potentially be built on the GL Property. President Accomando stated there was concern eighty-one (81) residents of SRG would be paying for the maintenance of Carol and Louise, and there was not enough money to mill Carol Street. She noted when the culvert was in place there was increased truck traffic from the farms and businesses. She further explained there were businesses in SRG causing truck traffic as well.

Supervisor Argue stated before SRG was activated there was a discussion regarding Carol Street and other unassessed landowners using the road after improvements were made. She indicated the residents of SRG were fine with being responsible for the maintenance of the road. She noted the Sunny Urban Meadows residents did not want to activate into a unit.

Mr. Foy confirmed the District could look at setting standards for rural tier agricultural roads but the standards would still have to meet DOT safety standards at a minimum.

Attorney Viator confirmed the culvert would have to be included in a Water Control Plan to assess SRG.

Supervisor Argue stated the District had an agreement with GL Homes where GL Homes was responsible for making certain improvements. She was inquiring about the additional crop share funds as a condition of the County. She suggested Indian Trail ask the County the amount of the additional crop share funds (she believed it was $5 million) and if some of the money could be used to replace the culvert crossing to District standards.

President Accomando stated before the District spends any more money on Staff, Legal, and Engineering going to the County, the letter should be sent to find out if the people want the culvert reinstalled.

Supervisor Argue stated before surveying the residents of SRG more information was needed to be included in the letter such as cost choices.

Mr. Hanson stated he would draft a letter and bring it back to the Board on July 15th.

Supervisor Johnson stated he agreed with drafting a letter to see what the residents of SRG want. He noted this did not have to be reinstalled right away.

Supervisor Argue stated there was the ability for the County to approve a crops share credit so if there was an agreement for GL Homes to pay for the culvert reinstallation, GL Homes would get credit for it.

A motion was made by Supervisor Jordano and seconded by Supervisor Argue to draft the letter and bring it back to the Board on July 15th.

President Accomando called for Public Comment stating each person would get three (3) minutes and only three (3) people could yield their time to a speaker.

Supervisor Farrell called the names on the Comment Cards wishing to address the Board. Multiple people from Santa Rosa Grove and Sunny Urban Meadows and other areas outside of activated units addressed the Board expressing support for the reinstallation of the culvert crossing.

Commissioner Baxter stated, due to litigation, the County could not use County Tax Funds for private roads. She encouraged the Board to allow GL Homes to install the culvert now, then plan and budget to replace it to a better standard later.

Supervisor Argue stated the Crop Share Funds were not considered County Tax Funds. She urged Commissioner Baxter to talk to look into it with County Staff. She also explained the Crop Share Funds were supposed to be spent within Indian Trail for the impact on Indian Trail roads.

Commissioner Baxter stated when she asked the County Staff she was told no, and no is no.

President Accomando stated if residents were not evacuated before the high water rises, they were not going to get out no matter how many exits. She stated when it rains 59th/60th is a disaster and virtually impassable.

Supervisor Jordano wanted Staff to look at the fastest way to get something done.

Mr. Foy stated he suspected GL Homes could install the culvert with certain backfill material and guardrail. He reiterated the culvert was on Indian Trail property and Indian Trail has liability for whatever goes onto District property.

Supervisor Argue inquired about the 100-foot section by the canal and the liability for it. She asked the answer to be brought back to the Board on July 15th.

Attorney Viator read back Supervisor Jordano's motion: directing Staff to prepare a letter to come back to the Board with the particular options (which included costs); amended to add

timeframe. The amended motion was made by Supervisor Jordano and seconded by Supervisor Argue.

President Accomando called the vote. The amended motion passed unanimously.

9. PUBLIC INPUT

The time being 8:00 PM, President Accomando called for Public Comment. She also explained the procedures for making Public Comments both in-person and virtually via Zoom. She reminded the Public there was a three (3) minute time limit per person and all comments should be addressed to the Board.

Supervisor Farrell called the names on the Comment Cards.

John Riveria and Matt Engle addressed the Board.

Mr. Lawrence explained the lights on the baseball field were under warranty with Musko. He stated most the lights had been fixed and/or replaced.

Mr. Robinson provided an update regarding the Equestrian Arena stating the drag machine was pulling up some of the lining under the arena. Staff removed the fabric for approximately ten (10) feet circle around where the barrels go, dropped the footing down an additional twelve (12) inches, repacked the footing and reanchored the rope for the barrel.

Supervisor Argue confirmed Staff gives updates via presentations regarding the cost of millings.

Mr. Hanson explained the cost of millings was all inclusive, including fuel, material and in-house labor.

Supervisor Argue stated there were variables such as sock piling the millings at a cheaper cost when Staff can secure it. The millings are budgeted per year not per project.

Mr. Hanson stated Staff budgets to mill twenty miles of roads per year.

President Accomando called for a ten (10) minute break.

President Accomando asked if Item 7.3 could be moved up to 7.B? A motion was made by Supervisor Argue, seconded by Supervisor Farrell and unanimously passed to move Item 7.3 to Item 7.B.

7.B Approving Piggyback Contract/Cooperative Agreement with LTG Sports Turf one, LLC.

Mr. Hanson confirmed there were representatives from LTG Sports Turf present and Danny Duncan representing the AAL. He explained the turf contract was for Field #1 at ACP South Expansion. He confirmed the turf project was being funded by the County Bond.

Mr. Lawrence stated the Representatives from LTG Sports Turf brought samples of turf and were available to answer questions. Mr. Lawrence confirmed LTG Sports Turf was the vendor installing artificial turf on the County Parks.

Wes Hart and Chris Wedge gave a brief presentation regarding turf choices and recommendations and passed samples of the turf to the Board Members. Mr. Hart explained the turf had a cooling element and the G-Max rating is the firmness or softness of the turf. Mr. Wedge stated there was approximately five-man hours per month to maintain the field.

Mr. Hanson explained the District hired Juniper because of its experience with artificial turf as well as the maintenance of natural turf. There was discussion regarding field color, basin exposure, and painting of lines and logs. Mr. Hanson stated Staff was asking the Board to approve the overall all budgeted costs to meet the strict schedule for permitting. He noted field color. could be determined later.

Mr. Hart confirmed sprinklers were going to be capped and no longer used because the water on the turf causes more heat and humidity.

Mr. Duncan confirmed the turf recommended was the right choice.

Attorney Palen stated with the time constraints the District was using a piggyback approach off a national contract because the national company advertised in Florida and has a subsidiary in Florida. He explained there was a design cost and an estimated construction cost.

A motion made by Supervisor Argue, seconded by Supervisor Farrell, and unanimously passed to waive formal public solicitation and purchasing threshold. There was no Public Comment.

Mr. Hanson stated the fence was optional because of the $100,000 cost but the fence would help keep people from driving side-by-sides, bikes, and even horses on the turf. He noted the fencing would be along the inside of the track.

A motion made by Supervisor Argue and seconded by Supervisor Farrell to approve the Piggyback Contract Cooperative Agreement with LTG Sports Turf One LLC subject to legal review, up to $1.8 million, including the fence.

Attorney Palen clarified the motion included: the design proposal, the construction proposal, the CoolPlay and the fencing.

President Accomando called for Public Comment.

Richard Vassalotti stated the project sounded amazing; however, Fire Rescue uses the field to land the trauma helicopter. He noted the turf would need to be able to support the helicopter and the fence would need to allow a stretcher to be pushed through.

Mr. Wedge confirmed the weight of the helicopter would be supported and gave an example of Marine One landing on the same type of turf. Mr. Hanson stated there would be gates on the fence for pedestrian and emergency vehicles.

Mr. Duncan stated the turf field would allow the AAL to continue play when the north fields are resting in the winter. He also asked if the AAL Logo could be placed on the field.

President Accomando called the vote. The motion passed unanimously.

7.1 Consider: Change Order #1, R-3 Hamlin Blvd. for Cost Reduction

Mr. Robinson stated the contractor suggested an alternative option to using the GEO grid. He stated CAPTEC was in full agreement; however, the letter of recommendation from CAPTEC was not yet received. He reiterated the Change Order was Deductive meaning a Cost Reduction of $174,963.81.

A motion was made by Supervisor Argue and seconded by Supervisor Farrell to approve Change Order Requests #1 (Deductive), R-3 Road Plan Hamlin Blvd. for Cost Reduction of $174,963.81.

President Accomando called for Public Comment.

Mr. Engle expressed concern regarding the alignment of Hamlin and the lack of a sidewalk on the western end.

Following Public Comment, President Accomando called for the vote. The motion passed unanimously.

7.2 Consider: Installation of Barriers along 140th Avenue North and 162nd Drive North

Mr. Hanson explained he only wanted to discuss 162nd Drive N because he felt the District Special Litigator should be present during the 140th discussion.

A motion made by Supervisor Farrell, seconded by Supervisor Jordano, and unanimously passed to postpone Item 7.2 until Special Legal Counsel was available.

There was no Public Comment.

7.3 Approving Piggyback Contract/Cooperative Agreement with LTG Sports Turf one, LLC.

This Item was moved to Item 7.B.

7.4 ETIAC Recommendation for Additional Signage

Supervisor Farrell explained the Committee was looking at one section at a time.

Mr. Hanson stated the District's Traffic Engineer would work with Operations regarding the proper placement of the signs. He noted the smaller turquoise signs with caution measured eighteen inches x 12 inches.

Mr. Hanson stated the Committee also had feedback regarding the fencing along the horse trail on 130th by the millings. He explained Mr. Lawrence and Mr. Lester were researching prices to bring back to the Board.

A motion made by Supervisor Farrell and seconded by Supervisor Jordano to approve three equestrian signs on 40th Street. He reiterated placement of the signs would be dictated by the District Traffic Engineer.

President Accomando called for Public Comment.

A resident inquired about the cost of the sign and if a resident could pay to have a sign installed.

Mr. Hanson stated the 24in x 36in one-sided sign was $80, and the 12in x 18in one-sided sign was $24. He noted the cost of the signs for 40th Street would be approximately $240.

Supervisor Argue expressed concerns regarding the consistency of safe trails and signage of the Equestrian Community.

Supervisor Farrell confirmed the Committee was being consistent but was only looking at one section of the District at a time.

President Accomando called the vote. The motion passed unanimously.

7.5 Executive Director Evaluation

Ms. Donlon stated she had circulated the evaluation forms to each Supervisor prior to the Meeting. She noted the evaluation was public since Indian Trail was a governmented entity. She explained per contract the Executive Director's evaluation took place annually at the June Board Meeting, and if the Executive Director received a satisfactory or above average evaluation score (at least a 3.0), the Board may award an increase in base salary. She stated Mr. Hanson's average score based on all five evaluations was a final score of 4.93 out of 5.0.

Ms. Donlon shared with the Board Mr. Hanson requests: a wage increase equal to the medium salary of other District Managers. Ms. Donlon confirmed the salary range of the other District Managers was $189,000 to $240,000 with the med point of $214,626 and the average was $222,930. She stated Mr. Hanson requested between the range of $213,180 through $222,870. She stated Mr. Hanson had requested an increase in the monthly car allowance from $400 to $500 and an additional 40-hour accrual of vacation.

All the Board Members thanked Mr. Hanson for the exceptional job he has done throughout the year. Mr. Hanson also thanked the Board for their leadership.

A motion made by Supervisor Farrell and seconded by Supervisor Jordano to receive and file the performance evaluation summary for placement in Mr. Hanson's personnel file.

President Accomando called for Public Comment.

Richard Vassalotti addressed the Board stating evaluations were difficult. He thanked the Board and stated Mr. Hanson should receive the maximum salary requested.

Joni Martin also thanked the Board and stated Mr. Hanson had elevated the District.

Rene Hamilton, attending the meeting virtually addressed the Board stating raises should not be emotional but looked at with percentages to stay within budget. She also noted vacation should be standardized as to the number of years worked.

Supervisor Argue stated Mr. Hanson's contract was negotiated on his experience, not what everyone else in the District was receiving.

Ms. Heiser stated District Policy regarding vacation was four (4) weeks (160 hours) after an employee worked for the District ten (10) years. She stated the policy could be brought back regarding employees with twenty (20) years of service.

Ms. Donlon stated under current policy Mr. Hanson's vacation would increase to 120 hours as a five-year employee; however, she noted in previous years the Board granted Mr. Hanson an additional Forty (40) hours so on his anniversary date he will accrue 160 hours. Ms. Donlon stated Mr. Hanson was requesting an increase of an additional 40-hour vacation to equal two hundred hours.

Supervisor Argue stated she supported the increase in car allowance and the additional vacation time; however, she suggested a five (5) percent salary increase.

Ms. Donlon confirmed Mr. Hanson's current salary was $193,800, and a five (5) percent increase would be $203,490. She recapped the mid was $214,626 and the average was $222,930.

President Accomando stated the salary should be increased to the mid of $214,626.

Supervisor Jordano supported increasing the car allowance, increasing the vacation but wanted a cap, and increasing the salary to $215,000.

Supervisor Farrell supported increasing the car allowance, increasing the vacation without a cap because most of Mr. Hanson's vacations were "working vacations," and increasing the salary by 10.5 percent to $214,000.

Ms. Donlon confirmed per policy there was a vacation payout capped at 280 hours.

Supervisor Johnson supported increasing the car allowance, increasing the vacation, and increasing the salary to $215,000.

A motion was made by Supervisor Argue and seconded by Supervisor Jordano to add the additional 40 hours vacation which brings Mr. Hanson to 200 vacation hours; increasing his salary to $215,000; and increasing his car allowance to $500 per month.

President Accomando called for Public Comment.

Rene Hamilton addressed the Board regarding the salary increase of 10 percent stating all employees achieving a 4.9 on their evaluations should also receive a 10 percent raise.

Ms. Donlon confirmed the mid-range and average salary range was from other Districts. She explained she included the salary ranges of the municipalities for context only. She reiterated Mr. Hanson was under an employment agreement not an employee of the District. She noted everything the Board was considering was appropriate.

Joni Martin asked Ms. Donlon to clarify the mid numbers again. She suggested a minimum salary of $220,000.

Mr. Hernan thanked Mr. Hanson for a job well done and going above and beyond.

President Accomando passed the gavel to Vice President Farrell.

A substitute motion was made by Supervisor Accomando and seconded by Supervisor Argue to increase vacation by 40 hours, increase car allowance to $500 per month, and increase salary to $220,000.

Vice President Farrell called for the vote and the substitute motion passed unanimously.

7.6 Revision to Special Permits – RW, OH, and UT

Mr. Foy explained the minor change to the special permit application policy was after the special permit had been issued, Staff could time for inspections to the retainer fee.

A motion was made by Supervisor Argue and seconded by Supervisor Farrell to approve the revisions to the special permit applications and templates for the RW, UT, and OH Permits.

President Accomando called for Public Comment. There being none, the motion passed unanimously.

8. OTHER GOVERNMENTAL UPDATES

8.1 Consider: Mutual Aid Agreement with the Town of Loxahatchee Groves

Mr. Hanson stated the Town of Loxahatchee Groves was interested in entering into a Mutual Aid Agreement with Indian Trail. He explained Indian Trail would help out initially; however, if the Town needed further assistance, either he or Mr. Robinson would have to agree. If more assistance was needed the Town would have to pay Indian Trail at the FEMA rate. Mr. Hanson stated he would get the Agreement revised to include the FEMA rate language.

Mr. Hanson also suggested Indian Trail consider entering into a Mutual Aid Agreement(s) with Northern Palm Beach County Improvement District.

Mr. Hanson stated he received a call from SFWMD expressing concerns regarding White Fences and Deer Run because Indian Trail does not control the drainage.

A motion was made by Supervisor Argue and seconded by Supervisor Jordano approving the Mutual Aid Agreement between Indian Trail Improvement District and the Town of Loxahatchee Groves, adding FEMA Rate Reimbursement language, and changing 50 mph to 35 mph, subject to legal review, as amended.

President Accomando called for Public Comment. There being none, the motion passed unanimously.

Mr. Foy stated the two projects on the north side of Southern are beginning to become active through the Palm Beach County DRO Process; however, he does not have an update yet.

Mr. Foy stated Unit 19B (the thirty-four acres between 140th and Avocado, north of Hamlin and south of Northlake) was a part of the Elmore Agreement and is now located in the City of

Palm Beach Gardens. He noted the site plan for the project included 380 residential units and a minor amount of retail. He explained Palm Beach Gardens had not approved the site plan. Mr. Foy confirmed the property was not an activated unit, only those lands within the geographical boundaries of the Unit had been designated as Unit 19B. He confirmed the development would not connect to Hamlin based on the current site plan. Mr. Hanson stated this project should be monitored closely regarding safety access possibly to Hamlin. Mr. Foy confirmed Unit 19 did not include the rights-of-way to Hamlin, 140th and/or Avocado; therefore, the existing right-of-way was not within the District.

Supervisor Argue stated Palm Beach Gardens objected to the widening of Northlake and yet there is future development along Northlake in the approval process.

Mr. Foy reiterated there was a Landowner's Agreement in place; however, the project would have to meet the District's drainage criteria.

With the time being 11:00pm, a motion was made by Supervisor Farrell, seconded by Supervisor Jordano and unanimously passed to extend the meeting until 11:15pm.

Supervisor Argue asked if a sidewalk could be installed on 120th north of Orange? Mr. Hanson stated the District did not have the right-of-way on the east side of the road. He would look into the west side easement to see if a sidewalk could fit. He also stated Staff was planning to install the premanufactured speed tables on 120th for extra traffic control.

9. PUBLIC INPUT

Public Input was called earlier in the Meeting.

10. CONSENT AGENDA

A motion was made by Supervisor Farrell, seconded by Supervisor Jordano, and unanimously passed approving the following items on the Consent Agenda:

10.1 Approval: Disbursements Over $35,000
10.2 Approval: April 17, 2024, Regular Board Meeting Minutes
10.3 Approval: Revised and New Obstruction Policies

10. STAFF PRESENTATIONS

Mr. Hanson mentioned the Company wanting to install a cell phone tower on 71st and Seminole Pratt Whitney.

Mr. Hanson stated SFWMD wants to coordinate a Groundbreaking of the Corbett Levee Project and all five Indian Trail Board Members were invited.

Mr. Hanson noted Mr. Ricks, the County Engineer, had made a presentation on 60th Street N. for Westlake. Mr. Hanson stated he was going to ask Mr. Ricks to give the same presentation to the Board.

Mr. Hanson stated Staff had begun to remove all docks and other structures on the M-0 Canal including irrigation pumps. He also stated the letters regarding the District owned property along the FPL poles had been mailed. He noted one landowner stated he had grazing rights.

Mr. Robinson gave the Board an update regarding the R-3 and Santa Rosa Groves projects.

Mr. Lawrence provided an update on Coconut Park.

11. SUPERVISOR BUSINESS

Supervisor Farrell suggested Indian Trail approach the County to relieve the District from liability regarding the culvert crossing at 59th Street because Commissioner Baxter suggested letting GL Homes install an agricultural crossing.

The time being 11:15pm, a motion was made by Supervisor Farrell, seconded by Supervisor Argue and unanimously passed to extend the Meeting until 11:25pm.

Supervisor Argue briefed the Board on the presentation given by Commissioner Baxter to the Westlake Counsel. She noted the Board had consistently advocated 60th Street be built to Seminole Pratt Whitney. She stated there was a condition for Minto to turnover the right-of-way of 60th from 140th to Seminole Pratt Whitney, and there was a condition for the road segment to be built before anything else. She stated the presentation given totally ignored this road segment. She concluded in the past the Board had sent letters to the County and TPA supporting and prioritizing 60th Street to Seminole Pratt Whitney. Supervisor Argue stated the District should be sending affirmation letters regarding the District's position on 60th and the extension of Okeechobee Blvd. on a monthly basis.

Supervisor Johnson stated he would like to see the presentation on 60th. Mr. Hanson reiterated he would invite Mr. Ricks to attend the July Board Meeting and give the same presentation.

President Accomando stated she had been getting numerous calls regarding millings from residents wanting their roads milled. She suggested revisiting the Millings Policy for Fiscal Year 26. She suggested the residents wanting millings should get it and the ones who do not, should move on.

Mr. Hanson stated the District should do a workshop for millings.

12. REPORTS

A motion was made by Supervisor Farrell, seconded by Supervisor Jordano, and unanimously passed to receive and file the following reports:

12.1 District Attorney Report
12.2 District Engineer Report
12.3 Finance Report
12.4 Operations & Maintenance Report
12.5 Parks and Recreation Report
12.6 Public Records Requests

12.7 Resident Correspondence
12.8 Meeting Notice

13. ADJOURNMENT

There being no further business to come before the Board, the Meeting was adjourned.

_____
President

_____
Secretary

AGENDA ITEM NO. 11.2

INDIAN TRAIL
IMPROVEMENT DISTRICT
EST. 1957

Executive Summary

REGULAR MEETING BOARD OF SUPERVISORS

DATE:	January 15, 2025
SUBMITTED BY:	Scarlet Cantley
DEPARTMENT:	Administration
ITEM TYPE:	Minutes
AGENDA SECTION:	**CONSENT AGENDA**
SUBJECT:	Approval: July 15, 2024 - Special Board Meeting Minutes
BACKGROUND:	
FISCAL IMPACT:	
RECOMMENDATION:	Motion to approve the July 15, 2024 - Special Board Meeting Minutes.

ATTACHMENTS:
Final 2024-0715 - Special Board Meeting Minutes.pdf

MINUTES OF SPECIAL BOARD MEETING OF THE
BOARD OF SUPERVISORS
INDIAN TRAIL IMPROVEMENT DISTRICT
July 15, 2024

A Special Meeting of the Board of Supervisors of Indian Trail Improvement District was held at 5:30 p.m. on September 18, 2024, located at the District Administration Building, 13476 61st Street North, West Palm Beach, FL 33412. This Meeting was in-person and used the Zoom Webinar Meeting platform for public participation. Present during the Meeting were Supervisors: Elizabeth Accomando, Patricia Farrell, Keith Jordano, and Betty Argue. Supervisor Michael Johnson was absent. Also, in attendance were: Burgess Hanson, Executive Director; Robert Robinson, Assistant Executive Director; Scarlet Cantley, Administration and Grants Coordinator; Carey Nelson, Technology Infrastructure and Cyber Security Coordinator; Mary M. Viator, Esq. and Frank Palen, Esq. of Caldwell Pacetti Edwards Schoech & Viator LLP.; and Jay Foy, P.E. of Stormwater J Engineering, Inc. Special Guests in attendance were: Larry Portnoy, VP GL Homes; Bobby Poyner of Cypress Development District; Alan Wertepny, P.E. of Mock Ross and Associates, Inc.; and Tyler Thompson, P.E.; and Palm Beach County Commissioner Sara Baxter.

CALL TO ORDER

President Accomando called the Meeting to Order, led in the Pledge of Allegiance, and called Roll. She also asked for everyone to remain standing for a moment of silence for the victims of the attempted assassination of former President Trump.

WELCOMING REMARKS

President Accomando welcomed everyone and asked for all cell phones to be placed on silent. President Accomando reminded everyone the Special Meeting was time certain to one hour. She and all Board Members encouraged everyone to be respectful.

5. AGENDA APPROAVAL

President Accomando called for any additions, deletions, or changes to the Agenda.

A motion was made by Supervisor Jordano, seconded by Supervisor Farrell and passed to approve the Agenda as amended by Mr. Hanson to correct the Fiscal Impact of Item 7.2 from $20,000 to $120.000.

6. REGULAR AGENDA

6.1 Consider: 60th Street Culvert Replacement Options

President Accomando summarized the GL Homes offer to install the 60th Street Culvert. She noted the proposed crossing was safer than the previous proposal and Santa Rosa Groves residents would pay nothing for the installation. She explained the culvert crossing would be planned, permitted and safe.

President Accomando noted residents were stating she should not vote. President Accomando explained she brought the failing condition of the culvert to the attention of District Staff. Attorney Viator confirmed President Accomando can and was expected to vote as a Board Member because she did not benefit personally any more of less than any other resident in Santa Rosa Groves.

President Accomando passed the gavel to Vice President Farrell.

A motion was made by Supervisor Accomando for GL Homes to install the culvert at their cost, subject to legal and engineering approval which includes perpetual maintenance as required by engineering and the permit itself; and being an agricultural crossing to be installed wet; required to also include a gate to remain open until such a time when future traffic or development requires it to be closed, so as to not put a burden on Santa Rosa Groves residents; or a resident petition requesting the closure of the gate noting police and fire rescue would be able to use if closed.

President Accomando explained she thought this motion was aligned with what the residents want and with District Policies.

Supervisor Argue offered to modify the motion stating GL Homes was not offering to install a culvert with a gate. President Accomando confirmed the District would pay for the gate.

A substitute motion was made by Supervisor Argue approving the permit for the Agricultural culvert with conditions regarding the surrounding tier density, intensity, land use or zoning changes that may impact the culvert; the current tier is a rural tier; the current land use surrounding the culvert relates to the rural tier, with the exception of GL Homes which is not a direct connection; the Board reserves the right to revoke the permit; with no gate.

Supervisor Jordano amended Supervisor Argue's substitute motion approving the installation of the culvert by GL Homes without any conditions; and the conditions of density, gate or anything else to be discussed at a later date.

President Accomando stated protections needed to be built in for the community. Supervisor Jordano stated he wanted the installation of the culvert to get done quickly, safely, and permitted. He suggested having a workshop down the road regarding conditions.

Supervisor Farrell inquired regarding the amount of traffic and the stability of the proposed culvert.

Mr. Foy confirmed the District had not received the Special Permit Application yet; however, the Applicant's Engineer did submit a preliminary plan which Mr. Foy returned comments. Mr. Foy stated per his comments, the Applicant inserted certain language relating to the soil compaction to be used which meets DOT requirements. Mr. Foy explained a Special Permit was not something designed by the District. As previously stated, he would have designed the culvert installation differently; however, he was asked to look at it as an agricultural crossing

which does not meet the District's normal standards. Mr. Foy stated the Applicant would have an Engineer sign and seal the plans confirming FDOT safety requirements have been met. Mr. Foy stated he would have added guard rails, had flowable fill and dewatered, but the applicant submits the plans with the Special Permit for approval.

Mr. Portnoy addressed the Board stating neither GL Homes nor the CCCDD would be responsible for perpetual or any maintenance of the crossing, except for the canal itself. He confirmed the CDD would be responsible for mowing the banks and spraying the rip rap.

Mr. Foy confirmed maintenance responsibility was a normal condition of the Special Permit Applicant; however, if the Board wanted to modify the permit and have Indian Trail Unit 20 maintain the crossing, the crossing itself would have to be within a Water Control Plan. He noted the District would need to make a minor amendment to the Unit 20 Water Control Plan to allow Santa Rosa Groves to pay for the maintenance. Mr. Foy noted maintenance would encompass the rip rap, the road itself, the dirt under it and the pipe(s) if they fail. He also noted the District would have the ability to rip out the culvert, if necessary. He assumed the amendment would be to Unit 20.

President Accomando asked all Santa Rosa Groves Landowners present by show of hands indicate if they were ok with Santa Rosa Groves paying for the maintenance of the crossing. Mr. Foy broke down the elements of the crossing maintenance and stated it was a matter of time how much will the pipe flex. He reiterated that was the reason Staff suggested a gate.

Mr. Hanson stated Unit 20 has the debt repayment for the bond for capital improvements; however, the landowners are also assessed a maintenance fee to cover grading or canal vegetation.

Supervisor Farrell stated residents of Unit 20 would have to continue paying maintenance, plus an additional payment of approximately $100 per unit per year for the future replacement of the crossing.

Supervisor Argue stated these were unknown circumstances. She explained we can amend the Unit 20 Water Control Plan to add the crossing and review the unknown circumstances such as increasing traffic, at a later date. She confirmed the condition in her motion noted increased traffic was a variable the crossing was not designed for. She noted at the future time of a changed variable, the District can evaluate and ask the landowners of Unit 20, if they want the increased traffic. She stated there was an offer by GL Homes to pay for the crossing and her motion placed conditions on the permit. She reiterated it required a minor amendment to the Water Control Plan of Unit 20 so the Board should approve and move forward.

Supervisor Jordano restated his motion for GL Homes to install the culvert now and the Board can add conditions at a later date.

Mr. Portnoy stated GL Homes was contacted by various Board Members, District Staff, and Commissioner Baxter's office. He confirmed GL Homes was trying to be good neighbors offering to pay for the installation of the culvert. He explained adding a gate would cut out Sunny Urban Meadows making the road a Santa Rosa Groves road only. He noted GL Homes was not comfortable with the installation of a gate. GL Homes had not looked at the internal impact of the gate. He asked for a condition in the permit of no gate installation without GL Homes approval.

Mr. Portnoy explained the culvert installation was never intended to be a permanent fix; the purpose was to buy the District time to install a more permanent crossing. He confirmed having the gate remain open until a certain time was too nebulous for GL Homes. He stated GL Homes wanted a seat at the table regarding a gate.

Supervisor Farrell stated the crossing was on Indian Trail property; therefore, the District was liable. Mr. Hanson stated District Staff and Engineering were recommending the gate because the culvert was being agriculturally installed and future non-GL Homes development could result in over use of the crossing.

Supervisor Farrell stated the District should hold off on the gate for now, however, if the culvert becomes overused the Board can revisit the situation with GL Homes.

Supervisor Argue repeated her motion: Approving the permit for the Agricultural culvert with conditions regarding the surrounding tier density, intensity, land use or zoning changes that may impact the culvert. She noted at that time the Board would look for feedback from the Community, County and GL Homes.

Supervisor Jordano amended his motion to approve SP-0553RW with conditions and attachments, submitted by GL Homes for a culvert agricultural installation, subject to Legal and Engineering review and acknowledging GL Homes should have the right to come to the table and make changes to the culvert.

Mr. Portnoy stated GL Homes was not adverse if circumstances change to agreeing to a gate; but GL Homes did not want to install the culvert blindly.

Supervisor Jordano confirmed his amended motion was in agreement with Supervisor Argue's amended motion. Supervisor Jordano seconded Supervisor Argue's amended motion.

Supervisor Argue read her motion again for the record:

Motion to approve Special Permit No. SP-0553RW with conditions and attachments, submitted by GL Homes for a culvert agricultural installation, subject to Legal and Engineering review with conditions if the surrounding tier, or density, or intensity, or land use or zoning changes the Board reserves the right to revoke the permit with GL Homes and the Santa Rose

Community was to be included in discussion. Culvert Maintenance was to be assumed by Indian Trail.

Supervisor Argue stated she was going to make a second motion to add the culvert to Santa Rosa Groves Unit 20 Water Control Plan.

Mr. Foy confirmed Staff could proceed with the process but could not guarantee the Board would approve the Water Control Plan. He noted the public would also have input. He reiterated the permit could not be approved until the maintenance entity has been decided. He explained the Water Control Plan must be amended before the Unit 20 landowners could assume the cost of maintenance.

Attorney Viator stated the Board could not pre-approve the Amendment to the Unit 20 Water Control Plan. A Resolution would be required and the Board could approve amending the Unit 20 Water Control Plan at the August 21, 2024, Regular Board Meeting.

Mr. Hanson stated the culvert was removed due to safety and liability to the entire District; therefore, the removal was paid for by the General Funds. He suggested District Staff could work on the minor Amendment to the Unit 20 Water Control Plan while GL Homes was submitting the permit and preparing for the installation.

Supervisor Argue stated GL Homes was prepared to install the culvert within the next 60 days.

Mr. Portnoy stated he was having difficulty with the conditions of what might happen. He expressed concern the permit language could be revoked and confirmed the Culvert could be installed within sixty (60) days of permit issuance.

Supervisor Argue explained currently there was no direct connection to Carol Street by GL Homes nor Sunny Urban Meadows; however, if that were to change to a direct connection the

culvert would not be sufficient. She reminded Mr. Portnoy that GL Homes only controlled land use and zoning changes within their property.

Mr. Portnoy stated GL Homes had the ability to shift more homes (density) into the Cowen Property. He expressed concern regarding future discussions on density. He requested the motion language be amended to land use changes which permit additional housing.

Supervisor Farrell stated this was a complex issue and expressed concern regarding voting on this large issue. She cautioned the Board needed to look at the Big Picture. She disagreed with Supervisor Jordano wanting to install the culvert now and discuss the what ifs later.

Attorney Viator reviewed the steps to form a Unit of Development. Then Attorney Viator reviewed the process to perform a minor amendment to the Unit 20 Water Control Plan stating the responsibility for maintenance of the crossing would be added into the existing Water Control Plan for adoption by the Board. She confirmed the minor amendment was an expedited process with the Board directing the preparation of the Resolution authorizing the maintenance responsibilities and the gate to be approved at the August 21, 2024, Regular Board Meeting. She noted approval of the Resolution would amend the Water Control Plan to include the improvement.

Mr. Hanson clarified the Board could direct Staff to prepare the minor amendment to the Water Control Plan for the Board's approval on August 21, 2024. Attorney Viator confirmed the permit could be brought back at that time to make the changes if the Board so chose.

President Accomando asked if the permit was approved could GL Homes install the culvert before the minor amendment to the Water Control Plan? She noted there would be no maintenance in the beginning. Both Supervisor Argue and Attorney Viator agreed the installation of the culvert needed to wait until Santa Rosa Groves had the legal authority to have the culvert installed along with the responsibility to maintain the culvert.

President Accomando expressed concerns changing the condition from land use to density.

Mr. Palen stated the District has an existing agreement with GL Homes regarding how the District and Developer will address how the property is developed over a long period of time. He noted there were traffic studies showing how traffic was going to be distributed. He reiterated the crossing was never a part of the plan for GL Homes. Mr. Palen stated the property not owned by GL Homes was an issue that may change the traffic distribution.

Supervisor Argue clarified her motion stating it was always the intention of increasing the density and intensity. She noted density and intensity on a rural level was low [density is residential, and intensity is non-residential]. She explained if any density or intensity were to change, which is a land use change and zoning approval, those changes would be a material change. She noted the word increase was added to her amended motion: "a change in land use, density, intensity, or zoning changes that will increase the volume or character of motor vehicle traffic contributing to an agricultural crossing".

Attorney Viator stated the culvert installation was for a very special use which was in existence now.

Mr. Palen confirmed since Indian Trail owned the land where the culvert would be installed, Indian Trail had the right to consider how its property could be used for the benefit of the community. He confirmed if conditions changed the approved permit would allow the Board to reconsider their decision.

Attorney Viator recapped there was a motion made by Supervisor Argue, seconded by Supervisor Jordano, as amended by Supervisor Argue as set forth below:

Motion to approve Special Permit No. SP-0553RW with conditions and attachments, submitted by GL Homes for a culvert agricultural installation, subject to Legal and Engineering

review with conditions if there were changes to the surrounding tier, land use or zoning increasing density or intensity, the Board reserved the right to revoke the permit. GL Homes and the Santa Rosa Community were to be included in discussion. Culvert Maintenance was to be assumed by Indian Trail. Supervisor Jordano seconded Supervisor Argue's amended motion.

Mr. Portnoy stated "included in discussion" was not what he said; however, Supervisor Argue confirmed that was what she had said.

Supervisor Argue stated if GL Homes wanted to agree to installation of a culvert with a permit with these conditions, then she can support approving the permit. She confirmed she was not going to approve a permit stating the District had no control of what happens in the future on District owned land.

Mr. Portnoy stated he was ok with Supervisor Argue's motion, just not the gate.

President Accomando stated her point for the District to install a gate and leave it open, was if and when conditions changed, the gate would be there ready to close.

Supervisor Argue stated she wanted to modify her amended motion and received Public Comment; however, to be fair the Special Meeting would be tabled until after the 6:45 pm Joint Workshop Meeting.

A modified amended motion was made by Supervisor Argue to add "there is to be no gate installed" to her amended motion.

A motion was made by Supervisor Jordano, seconded by President Accomando and unanimously passed to extend the Special Meeting until 7:00 pm.

Supervisor Farrell asked if there was a second for Supervisor Argue's modified amended motion.

Supervisor Jordano withdrew his second to Supervisor Argue's first Amended motion. He stated GL Homes should have some protection.

Mr. Hanson stated the land was owned by the District.

Supervisor Farrell passed the gavel back to President Accomando and seconded Supervisor Argue's modified amended motion. She then asked for the Comment Cards.

Public Comment:

President Accomando called for Public Comment. All Public addressing the Board and submitting Comment Cards were in support of the reinstallation of the culvert.

President Accomando confirmed the culvert was not removed as a knee jerk reaction. She stated it was inspected, dried out and dirt was removed. She noted there were gates throughout the community.

Attorney Viator stated the maintenance responsibility needs to be resolved. Supervisor Argue stated it was in her motion: "GL Homes and Santa Rosa Groves to be included and maintenance to be assumed by ITID", and her second motion was going to be to Staff to start…

There was another Public Comment heard at this time with an inquiry if the culvert was not open, was Santa Rosa Groves going to be assessed for the use of other Indian Trail roads.

President Accomando stated activated units do not get assessed into each other. She reiterated Santa Rosa Groves was an activated unit of Indian Trail.

President Accomando stated those residents were not within an activated unit. She reiterated Santa Rosa Groves was an activated unit.

Attorney Viator stated there was a pending Amended Motion and a second on the table.

Mr. Portnoy stated the plans were completed and the permit application should be submitted within the week. He confirmed GL Homes had ordered the pipe in anticipation of the Board's decision.

President Accomando called the question The motion passed 4-0.

7. CONSENT AGENDA

A motion was made by Supervisor Farrell, seconded by Supervisor Jordano, and unanimously passed approving the following items on the Consent Agenda with the addition to Item 11.6 mentioned during Agenda Review:

7.1 Approval: FPL SP-0552, Wood Pole & OH at 17191 82nd Rd N.
7.2 Ratification: McIntosh Contract – District Consulting Services Interim Chief Financial Officer

8. NOTICE OF MEETING

President Accomando confirmed the meeting had been noticed.

13. ADJOURNMENT

There being no further business to come before the Board, the Meeting was adjourned.

_____
President

_____
Secretary

AGENDA ITEM NO. 11.3

INDIAN TRAIL
IMPROVEMENT DISTRICT
EST. 1957

Executive Summary

REGULAR MEETING BOARD OF SUPERVISORS

DATE:	January 15, 2025
SUBMITTED BY:	Scarlet Cantley
DEPARTMENT:	Administration
ITEM TYPE:	Minutes
AGENDA SECTION:	**CONSENT AGENDA**
SUBJECT:	Approval: July 15, 2024 - Joint Workshop Meeting with the Acreage Athletic League (AAL) Minutes
BACKGROUND:	
FISCAL IMPACT:	
RECOMMENDATION:	Motion to approve the July 15, 2024 - Joint Workshop Meeting Minutes.

ATTACHMENTS:
Final 2024-0715a - Joint Workshop with the AAL.pdf

MINUTES OF JOINT WORKSHOP MEETING OF THE
BOARD OF SUPERVISORS
INDIAN TRAIL IMPROVEMENT DISTRICT
WITH THE ACREAGE ATHLETIC LEAGUE
July 15, 2024

A Joint Workshop Meeting of the Board of Supervisors of Indian Trail Improvement District with the Acreage Athletic League (AAL) was held at 6:45 p.m. on July 15, 2024, located at the District Administration Building, 13476 61st Street North, West Palm Beach, FL 33412. This Meeting was in-person and used the Zoom Webinar Meeting platform for public participation. Present during the Meeting were Supervisors: Elizabeth Accomando, Patricia Farrell, Keith Jordano, Betty Argue, and Michael Johnson. In attendance from the AAL were: Wendy Rojas, Executive Board President; Geoff Grafton, Executive Board Treasurer; Brandy Claude and Ron Florez. Also, in attendance were: Burgess Hanson, Executive Director; Robert Robinson, Assistant Executive Director; Miriam Heiser, Chief Human Resource Officer; Kenny Lawrence, Facilities, Parks and Recreation Director; Jeff Sisolak, Facilities and Parks Manager; Kayla Heisser, Parks Specialist; Mary Cordis, AP/Risk Management; Scarlet Cantley, Administration and Grants Coordinator; Carey Nelson, Technology Infrastructure and Cyber Security Coordinator; and Mary M. Viator, Esq. and Frank Palen, Esq. of Caldwell Pacetti Edwards Schoech & Viator LLP.

CALL TO ORDER

President Accomando called the Meeting to Order, led in the Pledge of Allegiance, and called roll.

4. WELCOMING REMARKS

President Accomando welcomed everyone and asked for all cell phones to be placed on silence.

5. STAFF PRESENTATION OF AAL SERVICE PROVIDER AGREEMENT

Mr. Lawrence stated Staff had met previously with the AAL Executive Board (AAL). He noted this Workshop was for the District to set forth it's expectations and the AAL to do the same.

Ms. Rojas stated the AAL had received the draft Service Provider Agreement (SPA) and other than a few clarification questions, the SPA looked good.

Mr. Lawrence stated the following concerns of the District:

- AAL Corporation Documents list District Address; therefore, creating a direct connection to the District. Mr. Lawrence suggested the AAL use the address used when filing the AAL taxes.
- AAL Articles of Incorporation need to be amended. Currently, the AAL is a subcommittee under the Acreage Landowner's Association (ALA). Ms. Rojas stated the documents had been updated by removing the AAL as a subcommittee of the ALA.
- AAL Bylaws need to be amended. Currently (Revised 10/06/2015), Article V had "appointed by ITID/Parks Director." The ITID/Parks Director had voting rights.
- 2024 Florida Not For Profit Corporation Annual Report – lists District Address: 6701 140th Ave. N. as Current Principal Place of Business. The address should be changed.

Mr. Hanson stated if the AAL was connected to the District, the AAL would have to follow the rules and procedures of the District, including procurement.

Mr. Grafton stated the AAL would meet at the July closed meeting, then a public meeting would be advertised and held in August indicating proposed changes to the By Laws.

Attorney Palen stated the issue was liability due to the AAL being treated as a branch of the District. Ms. Heisser suggested the District contact EGIS for insurance questions regarding what address to use for principal residence, and the AAL contact their liability insurance carrier for the same. Attorney Palen suggested the AAL consult an independent attorney specializing in Non-Profit Organizations.

Mr. Grafton confirmed the Articles of Incorporation were amended and filed in 2021 with the Seminole Pratt Whitney address; however, the Annual Report filed with Sunbiz reflected the District Address of 6701 140th Ave. N. He confirmed he could amend the annual report and

remove the voting procedures language regarding the ITID/Parks Director voting from the By Laws.

Supervisor Farrell stated the last amendment filed was in 2015.

Mr. Grafton apologized; he thought the 2021 Amendment had been filed. He agreed the AAL could use the 2021 suggested amendments, add some changes to it, and file the amendments to the Articles of Incorporation and the By Laws with the State.

President Accomando asked the AAL if they were interested in having a long-term permit with the District instead of the SPA. Ms. Rojas stated the AAL would prefer the SPA.

Attorney Palen reiterated any records the District requires in a SPA must be made available to the public. Instead of the District giving the AAL a sponsorship check, Mr. Hanson suggested the AAL give the District receipts for reimbursement. Ms. Heisser stated the District wanted to be helpful to the AAL regarding records.

6. BOARD DISCUSSION

Mr. Hanson confirmed the $5,000 annual sponsorship placed the District's name on everything from the scoreboard to uniforms and equipment. He stated the purpose of the sponsorship was to reduce the fees for sports participants. He suggested instead of the District giving an annual sponsorship of $5,000, the District could reimburse the AAL for $5,000 in equipment, etc.

Supervisor Farrell expressed caution regarding the District name on everything because it may tie the District and the AAL together. She commented the AAL website was updated and easy to use.

It was the consensus of the Board that there be a once a year expense reimbursement for up to $5,000. Mr. Grafton agreed. Supervisor Farrell stated the current SPA was extended until

November 15, 2024. Mr. Hanson confirmed the current $10,000 earmarked for AAL Sponsorship was reallocated to lighting installation at Citrus Grove Park. There was a FRDAP Grant for lighting at Citrus Grove so when the Grant came through the lights would be moved to another park.

Mr. Grafton stated the AAL insurance was renewed and paid on July 1st. He suggested the expense reimbursement be for insurance and background checks. Mr. Hanson cautioned not to have reimbursement for concessions.

Supervisor Farrell reiterated the AAL was not only receiving sponsorships from the District but also receiving field use and other services for free.

Supervisor Argue stated the AAL Home Park was ACP. She stated the other parks should be open to other organizations and the public. She expressed concern with AAL being at every Park; therefore, restricting use by the public.

Supervisor Argue stated the AAL was not only recreational sports. She confirmed there were travel and more competitive teams. Mr. Hanson stated Athletic Services captured all levels of sports.

Supervisor Farrell asked why the AAL had closed meetings? Mr. Grafton stated the closed meetings were described as Workshops, only discussion with no decisions. Supervisor Argue stated grievances were also discussed in closed meetings, and some grievances involve HIPPA protections.

Supervisor Argue stated the AAL through the SPA was allowed to use Hamlin House for each of its meetings (which may be more than once a month). Ms. Rojas stated when the Press Box was operational the AAL held meetings there.

Mr. Grafton confirmed the AAL paid for the concession and storage sheds located at ACP North. He stated he was not sure who paid for the garage; however, it was used for football equipment storage.

Mr. Lawrence stated Juniper needed space for their equipment and PBSO had inquired about placing a substation at the park. Supervisor Argue voiced her concerns regarding the parking spaces the District commandeered from ACP North. She cautioned Staff from encroaching further parking at the park.

Supervisor Argue stated the field lining was not good. Mr. Lawrence stated due to field conditions and maintenance, field lining was a part of Juniper's contract. He asked to be alerted when the field lining was incorrect.

Mr. Hanson suggested the District purchase two ice machines for location at ACP South Concession. He confirmed ERM would not have an issue.

Mr. Lawrence reviewed the definition of Exclusivity stating if the AAL was not using the facility then another group through a permit could use it.

Mr. Hanson stated when the fields were ready at ACP South, a different fee schedule would be required due to restrictions on use.

Attorney Palen cautioned the District allowing AAL owned property on District property. He noted there should be conditions. He noted the District was in the process of revising the District's Standard Insurance Requirement on recommendations from EGIS. There was discussion regarding Background Checks. Ms. Heisser stated the District should have a copy. Mr. Hanson suggested Level 2 backgrounds should be done.

Mr. Lawrence, using a worksheet, facilitated discussion regarding the elements of an SPA.

1. Type of Agreement: SPA
2. Term of Agreement: 5 years

3. Date of Agreement Execution: October 1, 2024, through September 30, 2029
4. Scope of Services: Youth and Adult Programming – Football, Soccer, Tennis, Baseball, Basketball, Pickleball, Softball, Lacrosse, Track & Field, Cornhole/Horseshoes, Kickball, Dodgeball, Golf (Driving Range) and Sand Volleyball.
5. Location of Athletic Services - Field Space at all District Parks except: Coconut Park, Hamlin House, Nicole Hornstein Equestrian Park, and the Skate Park.
6. Meeting Location: ACP North Pavilion and Press Box, Hamlin House, and Administration Building, with minimum three-day notice.
7. Meeting Terms: At least twice a month.
8. Onsite Equipment Storage: Yes, garage and sheds. Other TBD
9. Sponsorship Benefits: Reimbursement up to $5,000 annually.
   Sponsored Benefits Provided by the District:
   - Waivers for Building Use, Field Use, and Facility Use
   - Complimentary Services: Staff oversite; Field Lining and Setup
   - Annual Sponsorship
   - Use of ice machine at ACP South Concession
   - Financial (reimbursement detail)

   Benefits Provided by the AAL:
   - Acknowledgement
   - Logo Placement
   - Merchandise
   - Media Exposure
   - Event Exposure
10. Exclusivity: Yes, ACP North (Home Field)
    Types of Exclusivities:
    - First-Priority Scheduling at all parks (excluding exceptions)
    - Exclusive Use of Home Field
11. Concessions: Yes.
    Locations:
    - ACP North Press Box (exclusive to AAL) and Football Fields.
    - Unrestricted Area on ACP South (non-exclusive to AAL)
    - Vending Machines: Yes, Location: ACP North Press Box and/or under Pavilion? TBD
12. Insurance Requirements: TBD, based on revised District Insurance Requirements.
13. Public Records: District SPA Requirements are to be provided by AAL per Public Records Law. Specific SPA Requirements TBD.
14. Termination of Agreement: District can terminate with 20 days without cause or 30 days with cause written notice. AAL can terminate with 30 days written notice.

Mr. Hanson asked the Board Members to let him know of any further thoughts relating to the AAL SPA.

President Accomando stated the information covered in the Workshop was a good start.

Mr. Grafton summarized what the AAL needed to do moving forward:

- Change the address on the Annual Report
- Amendments to Articles of Incorporation and By-Laws: removing ITID/Parks Director; removing language regarding ALA.

Supervisor Argue suggested the AAL concentrate on fixing these items as well as talking to the individual sports boards and executive AAL Board. She also suggested waiting on filing the changes until the SPA was finalized.

Supervisor Farrell encouraged the AAL to consult with their legal counsel. She stated she wanted the AAL to grow and succeed.

Supervisor Argue stated there should be a non-resident fee established because it affects the District infrastructure. Attorney Palen stated relating to only ACP South, the Agreement with Palm Beach County prohibits discrimination based on residency.

Supervisor Farrell stated the non-residency would be difficult to prove without a map and knowing what residences were not within Activated Units of the District. She also noted the AAL would then have to get the non-resident payment portion to the District.

Richard Vassalotti addressed the Board stating times when Fire Rescue was needed, the gate needed to be clear. He also noted the striping in the parking lot for the Fire Truck to park was fading. He encouraged the AAL to keep gates cleared.

Mr. Grafton confirmed Flags for the Cure had their own Event Insurance, but they fell under the AAL too. Ms. Rojas stated the AAL had not received any injury reports from the Flags for the Cure.

Supervisor Argue stated the parking lot flow at ACP North needed to be reviewed by Staff.

The Board set August 28, 2024, at 6:30 pm for the next Workshop Meeting.

7. NOTICE OF MEETING

Proper Meeting Notice was advertised and attached to the backup.

8. ADJOURNMENT

There being no further business to come before the Board, the Meeting was adjourned.

_____
President

_____
Secretary

AGENDA ITEM NO. 11.4

INDIAN TRAIL
IMPROVEMENT DISTRICT
EST. 1957

Executive Summary

REGULAR MEETING BOARD OF SUPERVISORS

DATE:	January 15, 2025
SUBMITTED BY:	Scarlet Cantley
DEPARTMENT:	Administration
ITEM TYPE:	Minutes
AGENDA SECTION:	**CONSENT AGENDA**
SUBJECT:	Approval: August 21, 2024 - Regular Board Meeting Minutes
BACKGROUND:	
FISCAL IMPACT:	
RECOMMENDATION:	Motion to approve the August 21, 2024 - Regular Board Meeting Minutes.

ATTACHMENTS:
Final 2024-0821 - Regular Board Meeting Minutes.pdf

MINUTES OF REGULAR BOARD MEETING OF THE
BOARD OF SUPERVISORS
INDIAN TRAIL IMPROVEMENT DISTRICT
August 21, 2024

A Regular Meeting of the Board of Supervisors of Indian Trail Improvement District was held at 6:00 p.m. on August 21, 2024, located at the District Administration Building, 13476 61st Street North, West Palm Beach, FL 33412. This Meeting was in-person and used the Zoom Webinar Meeting platform for public participation. Present during the Meeting were Supervisors: Elizabeth Accomando, Patricia Farrell, Keith Jordano, Betty Argue, and Michael Johnson. Also, in attendance were: Burgess Hanson, Executive Director; Robert Robinson, Assistant Executive Director; Racquel McIntosh, Chief Financial Officer; Michael Peterson, Procurement Specialist; Kenny Lawrence, Facilities, Parks and Recreation Director; Scarlet Cantley, Administration and Grants Coordinator; Gina Stevens, Records Retention Clerk; Carey Nelson, Technology Infrastructure and Cyber Security Coordinator; Mary M. Viator, Esq. and Frank Palen, Esq. of Caldwell Pacetti Edwards Schoech & Viator LLP; Lara Donlon, Esq. of Torcivia, Donlon, Goddeau & Rubin, P.A.; and Engineer Jay Foy, P.E. of Stormwater J Engineering, Inc. Special Guests in attendance were: Lieutenant Darla Sauers, PBSO; and District Fire Chief Amanda Vomero, Palm Beach County.

CALL TO ORDER

President Accomando called the Meeting to Order, led in the Pledge of Allegiance, and called roll.

4.1 PRESIDENT'S WELCOMING REMARKS

President Accomando welcomed everyone and asked for all cell phones to be placed on silent. She encouraged everyone to check out the information on the District website. She reminded everyone present to fill out and submit a Comment Card in order to address the Board.

4.2 SUPERVISOR'S WELCOMING REMARKS

Supervisors welcomed everyone to the meeting.

5. AGENDA APPROAVAL

President Accomando called for any additions, deletions or changes to the Agenda.

Mr. Hanson asked to address the culvert crossing at 60th Street during Presentations.

Supervisor Argue asked if the PBSO and Fire Rescue Presentations could be moved to first in the Presentations since sometimes the presenters have to leave the meeting for emergencies.

President Accomando relisted the Presentations:

Item 6.1 – Mr. Hanson's Update on the 60th Street Culvert Crossing
Item 6.2 – PBSO Update
Item 6.3 – Fire Rescue Update
Item 6.4 – Medical and Dental Office Development
Item 6.5 – ERP Update

A motion was made by Supervisor Farrell, seconded by Supervisor Jordano, and unanimously passed to approve the Agenda, as amended.

6. PRESENTATIONS

6.1 Update on 60th Street Crossing by Burgess Hanson

Mr. Hanson stated the Special Permit for the project was in the final stages. He indicated there were two issues: GL Homes was requesting the Special Permit be assignable within GL Homes. Mr. Hanson explained GL Homes had created a new LLC on July 10, 2024, called IT Roads, LLC. Mr. Hanson stated the District would not allow assignability outside of the GL Homes umbrella.

Mr. Hanson stated the Board had directed if there were any land use or zoning changes, the permit could be brought back for reconsideration. Mr. Hanson stated GL Homes had reservations about the condition and wanted a traffic count to also be included in the condition.

Attorney Palen asked Ms. Stevens to make copies of the proposed permit for the Board. He explained the condition in question was a special condition of the special permit.

Attorney Palen stated Special Condition No. 12 was a long condition containing definitions dealing with when the Board should re-examine the impact of the installation of the culvert. He explained there were three original reasons why the Board could reconsider the Special Permit: If there was a material change in land use within a certain area to the west and south of the crossing; if there was a substantial increase in motor vehicle traffic crossing the culvert; and/or If there was a functional failure of the culvert crossing. He explained GL Homes did not favor the District having the opportunity to reconsider simply based on changes in land use because land use changes do not directly affect traffic. Attorney Palen stated GL Homes only wanted two special conditions. He noted the change would state "A substantial change in land use resulting in a substantial traffic increase." He explained the District would monitor traffic counts for one year after installation establishing a baseline and when traffic doubled the District would be able to reconsider. He recapped GL Homes was concerned with the Traffic Condition versus the Land Use Change.

Supervisor Argue stated the Special Condition should be Land Use and Zoning because Land Use does not create units, Zoning does; therefore, increasing the density and intensity. Attorney Palen stated the definition of Land Use in the Special Permit including Zoning.

Mr. Hanson confirmed, per Board direction, Staff had asked for a fifty percent increase in traffic; however, GL Homes asked for 100 percent.

Supervisor Argue stated the culvert was an agricultural crossing; however, if there were land use and zoning changes which increased traffic gradually, the Board should reconsider the agricultural crossing when there was a land use and/or Zoning change. She confirmed traffic counts were good but waiting until the traffic impact increases 100 percent was too long to review

the permit. She explained the Board should be able to reconsider the permit when there was a land use and zoning application into the County.

Mr. Hanson asked if the traffic monitoring projects created certain increases whether it could be a trigger? Supervisor Argue stated the intent of the condition was the Board could reconsider the special permit at the time of application for land use and/or zoning changes instead of when development had already happened.

Mr. Foy stated the condition regarding traffic studies was too complicated and convoluted. He confirmed the Special Permit with the three special conditions had been given to GL Homes. He stated it was up to the Board if any changes were going to be made to the Special Conditions.

There was discussion regarding the assignability to the new LLC. Supervisor Argue stated language should be added to the permit "requires Board approval" before the permittee can assign the permit.

Mr. Hanson stated if the permit was accepted by GL Homes, then work could begin on the culvert crossing within a month. He confirmed the CDD would be the entity doing maintenance to the canal, the mowing, or the herbicide applications not GL Homes. He also confirmed the original permittee was Palms West Associates One LLP, a land holding operation.

After further Board discussion, a motion was made by Supervisor Argue and seconded by Supervisor Farrell to approve the Special Permit subject to the same three conditions as follows: If there was a material change in land use within a certain area to the west and south of the crossing; OR If there was a substantial increase in motor vehicle traffic crossing the culvert; OR If there was a functional failure of the culvert crossing; the permit was not assignable without Board Approval; and Maintenance was performed by CDD.

President Accomando called for Public Comment. There being none, she called for the vote. The motion passed unanimously.

6.2 PBSO Update by Lieutenant Darla Sauers

Lieutenant Sauers updated the Board on an accident in the District.

There was discussion regarding school traffic backups.

President Accomando thanked Lieutenant Sauers.

6.3 Fire Rescue Update – District Chief Amanda Vomero

District Chief Vomero updated the Board on Calls and Response Times.

President Accomando thanked District Chief Vomero.

6.4 Medical and Dental Office Development – N. SPW Rd.

President Accomando introduced Mr. John Schmidt stating the presentation would be about the application for a text amendment and potential to construct a private, family-owned medical and dental facility on two (2) parcels near the intersection of Seminole Pratt Whitney Road and Northlake Boulevard. She noted the physical location of the northernmost parcel was 9185 Seminole Pratt Whitney Road. She stated Palm Beach County would consider a similar text amendment based on the location near Orange Boulevard and Seminole Pratt Whitney Road.

Mr. John Schmidt gave a presentation regarding the proposed Medical and Dental Office Development. Using a PowerPoint, he showed an ariel of the property. He explained the owners were requesting a text change so at some point a land use change can be requested. He reviewed the redlined version of the proposed text amendment.

Supervisor Argue stated she did not support commercial at the location. She stated the properties on the West side of Seminole Pratt would look like a house and act like a house. She

stated under the Acreage Neighborhood Plan commercial was required to have a minimum of ten (10) acres.

Mr. Schmidt stated he had contacted the Acreage Landowner's Association (ALA) to give a presentation. He confirmed the PBCBCC meeting was on November 6, 2024, and the Advisory Board Meeting was on October 11, 2024.

Supervisor Argue voiced concerns regarding a two-story office building. She suggested a height restriction in the suggested text amendment language.

Mr. Foy stated he had given Mr. Schmidt all the requirements for equal compensating storage.

President Accomando thanked Mr. Schmidt for his presentation.

6.5 ERP Update by Carey Nelson and Racquel McIntosh

Mr. Nelson provided an update regarding the ERP to the Board stating three of the largest modules (General Ledger, Purchasing, and Accounts Payable) in the Finance Department. He confirmed the ERP was scheduled to go live on October 1, 2024. He noted Staff had been training for the implementation of the modules, and training would continue throughout the process. Mr. Nelson stated the ERP transition should be finished by Finance by the end of May 2025.

Mr. Nelson stated Payroll would be in Phase 2. He confirmed payroll would be done in-house. Ms. McIntosh confirmed Payroll was one of the harder modules to implement in the ERP System because the Department of Labor had very specific standards and criteria. She noted the District must pay the employees and paychecks must be correct. She explained since payroll was not done in-house before it was going to require significant training. She stated payroll would be run through Paychex through the first quarter in 2025.

Ms. McIntosh stated the Finance Department was being restructured and cross training was a priority. She confirmed no one finance person would be solely trained in a task.

Mr. Nelson stated the ERP software would also take care of some of the functions currently performed manually; therefore, helping to reduce time and costs.

Mr. Hanson stated Mr. Nelson was very good at his job, not just the ERP, but also stopping numerous daily amounts of cyber-attacks on the District.

The Board thanked Mr. Nelson and Ms. McIntosh for the ERP update.

9. PUBLIC INPUT

The time being 7:30 PM, President Accomando called for Public Comment. She also explained the procedures for making Public Comments both in-person and virtually via Zoom. She reminded the Public there was a three (3) minute time limit per person and all comments should be addressed to the Board.

Mr. Doon addressed the Board regarding the milling of 42nd Road N. He voiced his concerns regarding the elevation of the road. He asked why Mango was not being milled only roads off of Mango. He also voiced concerns regarding driveways and whether they were going to be replaced. He stated the drainage needed to be fixed.

Supervisor Argue stated it was not the District's responsibility to widen the driveways. She asked if Staff had looked at the drainage. She asked Staff to follow up with Mr. Doon.

Mr. Foy confirmed the elevation of the road was based on the Water Control Plan.

Mr. Doon stated the District had an obligation to all existing homes to control flooding.

President Accomando thanked Mr. Doon and called for a ten-minute break.

7. REGULAR AGENDA

7.1 Consider: Diamond Communications Cell Tower Proposal

Mr. Hanson stated Mr. Cameron Lee was going to make a presentation; however, nothing had been negotiated.

Mr. Lee showed the subject property located at 15955 71st Place N. (owned by the District). He stated Dimond Communications was proposing a wireless communications tower on the property to improve cell coverage in Loxahatchee. He stated Verizon would be the anchor tenant, but all carriers would be welcome.

Mr. Lee proposed a utility easement access to a forty-by-forty-foot parcel; fenced and gated with eight to ten feet tall chain link fence. He confirmed the tower would look like a tree (100-foot tall monopine tower) and cover approximately one mile.

1. Mr. Lee reviewed Diamond's offer:
2. Long Term Lease of 30 to 40 years; and
3. Due Diligence of 24 months (surveying, engineering, permitting); and
4. Monthly Payment to Indian Trail of 40 percent of all rents and other fees collected by subleases on tower. Upon receiving all permits and breaking ground, the ground lease will commence with the monthly payment. Mr. Lee stated on average carrier fees were $2,500 to $3,000 per month with an annual increase of 1.5 percent; and
5. $25,000 bonus paid upon construction commencement.

Mr. Hanson stated the monthly amount was low because of the lack of commercial space in the District. Mr. Lee stated he was happy to negotiate; however, the terms should mirror other leases in Florida.

Mr. Lee confirmed Diamond would maintain the forty-by-forty-foot fenced in area and the roadway to it. He noted there would also be cameras for security purposes. He also reviewed the Safety of Cell Towers with the Board stating the FCC had deemed cell towers safe.

Supervisor Argue stated the parcel had been preapproved for a fire station. She also expressed concerns for allowing a height of a 120 feet tower with concerns for zoning changes to allow taller buildings.

A motion was made and amended by Supervisor Jordano and seconded by Supervisor Farrell authorizing Staff to negotiate a lease with Diamond Cell Tower including the positioning of the tower to co-exist with a future fire station or another civic use, adding relocation language, and subject to legal review regarding the height and potential zoning changes precedent.

President Accomando called for Public Comment. There being none, President Accomando called the vote. The motion passed unanimously.

The Board thanked Mr. Lee for his presentation.

7.2 Consider: Fee Update to the Facilities, Parks and Recreation Policies and Procedures

Mr. Lawrence reviewed the minor changes to the fee schedule for the Facilities and Parks Rentals and Events. Supervisor Argue suggested certain non-profit groups (schools, scouts, etc.) could have fees waived in-house by the Parks Director. Mr. Hanson stated Staff would bring back the non-profit section of the Parks Policy.

Supervisor Argue requested and it was the consensus of the Board for the Frontier PTO Ice Cream Social Permit with an Ice Cream Food Truck be approved.

Mr. Lawrence stated Staff was going to increase the approved vendor list for the District.

A motion was made by Supervisor Farrell and seconded by Supervisor Jordano to approve the updated rental fee structure to the Facilities, Parks, and Recreation Policies and Procedures.

President Accomando called for Public Comment. There being none, President Accomando called the vote. The motion passed unanimously.

7.3 Consider: Create Facilities, Parks and Recreation Section in the Regular Meeting Agendas for the Board of Supervisors

Mr. Hanson requested the Board change the policy to allow an Agenda Section specifically for Facilities, Parks and Recreation whether for policies, updates or events. Having a separate section would free up the Regular and Consent Agenda.

Attorney Palen stated the Board would be amending the Board of Supervisors Rules and Procedures, Section 4, which establishes the meeting structure.

Attorney Palen stated the Rules and Procedures needed to be updated to reflect the current Agenda structure.

A motion was made by Supervisor Argue and seconded by Supervisor Jordano to amend the Board of Supervisors Rules and Procedures to add the Section for Facilities, Parks, and Recreation Policies and Procedures before Other Governmental Updates.

President Accomando called for Public Comment. There being none, President Accomando called the vote. The motion passed unanimously.

7.4 Consider: "Long Term" Facility Use Permit for Loxahatchee Food COOP at Acreage Community Park

Mr. Lawrence stated the District received a permit request for a Farmer's Market on Sundays at Acreage Community Park on the North side in the parking lot until it could be moved to the South Expansion. He confirmed the North Fields would not be disturbed. He also confirmed the AAL did not have use of the fields on Sundays. Supervisor Argue stated there were AAL practices on Sundays. Supervisor Farrel stated use of the South Expansion was restricted for the Market Vendors making money.

President Accomando suggested the Market start out using the certain area of the South Expansion (including the Amphitheater) since the Market will begin small. The hours of the Market would be from 9:00am to 1:00 pm.

Supervisor Argue stated the fee needed to be adjusted because of additional trash collection.

Following Board discussion, a motion was made by Supervisor Jordano and seconded by Supervisor Farrell to approve the creation of a long-term facility use permit for Jonah Bolt to host

the Loxahatchee Food COOP at Acreage Community Park South on Saturdays, subject to relocation, and Staff and Legal review.

President Accomando stated the District may have to move the park location and/or the day. Mr. Hanson suggested possibly Hamlin House. Supervisor Argue stated she was not in support of a long-term lease at Hamlin House.

President Accomando called for Public Comment. There being none, President Accomando called the vote. The motion passed unanimously.

7.5 Consider: Palm Beach County's "Halloween on Citrus Grove" Event

Mr. Lawrence gave a history of the "Halloween on Citrus Grove" Event. He stated the District would host a Halloween Event the Saturday before at the Hamlin House and a parade beginning at Citrus Grove Park with a route to Nicole Hornstein Equestrian Park.

Supervisor Argue stated having the event at Hamlin Park was not an appropriate location. She stated the District should use Acreage Community Park South Expansion.

Mr. Hanson stated the District was not participating in the Halloween on Citrus Grove Event due to liability issues. He confirmed the only action taken would be to protect the works of the District. PBSO and/or Palm Beach County needed to take responsibility for the Halloween on Citrus Event.

Mr. Hanson asked the Board to shut down Citrus Grove Park for the full day of Halloween. The District was requesting a detail Deputy to monitor Citrus Grove Park in hopes to deter vandalism and other damage to the park.

Mr. Hanson stated the District was not asking for lights, port-a-potties or photo station.

Supervisor Argue and Supervisor Farrell expressed their confusion about why the District could not participate this year due to liability when the District had participated in the same event previous years.

Mr. Hanson stated it will only take one kid to be injured or even killed on one of the District roads; the District would be liable because of involvement with the event; and the District would be sued.

Supervisor Argue stated she supported creating a safe space inside Citrus Grove Park within the Halloween on Citrus Grove Event.

Supervisor Farrell asked if the District could advertise a District sponsored event only within the boundaries of the Park?

Attorney Palen stated it was a risk management issue with concerns raised by Staff and EGIS Insurance. He concluded the more it looked like the District was taking some sort of ownership of the event, the higher the risk of a lawsuit being successful.

A motion was made by Supervisor Farrell and seconded by Supervisor Jordano to approve the hiring of a PBSO deputy and barricades for Palm Beach County's Halloween Event.

President Accomando called for Public Comment. There being none, President Accomando called the vote. The motion passed unanimously.

President Accomando stated the District was not trying to stop the Event but only to limit liability by not participating in the Event.

Supervisor Argue stated she wanted the District Halloween Event and Parade to come back to the Board. She asked why was the District even having a parade? What about the liability? Why isn't the event being held at Acreage Community Park (ACP)?

Mr. Lawrence stated there was limited time and access to ACP North due to AAL use of the fields. He noted construction was scheduled on ACP South.

Supervisor Argue commented maybe the District needed to cancel all events. She stated Hamlin House was not a proper venue for large events. She reiterated there was not enough parking. The District should not be using tax dollars to host events.

Mr. Hanson stated it was up to the Board.

Mr. Lawrence stated the sponsors would cover the District hosted events (including Staff).

Supervisor Argue stated she wanted to see the breakdown of sponsorship funds and expenses.

Mr. Hanson stated Staff would bring the District Halloween Event back to the Board. He stated Staff had contacted the Acreage Landowner's Association (ALA) and the Acreage Athletic League (AAL) regarding hosting the Event.

Mr. Morgan addressed the Board stating for the last Christmas Event the vendors and sponsors were instructed to contact Indian Trail directly instead of the ALA. He stated he had not been contacted by Indian Trail for the 2024 Halloween or Christmas Events.

Mr. Lawrence stated all funds for the vendors and sponsors came through the District for auditing purposes.

Mr. Hanson stated Staff would bring back the event details to the Board.

7.6 Consider: Installation of Guardrail along 162nd Drive North.

Mr. Hanson stated the Guardrail was not specifically budgeted in FY24 or 25. Mr. Hanson stated funds may have to be pulled from the Reserves to pay for installation of the guardrails if operating funds were not sufficient.

Mr. Hanson stated the landowners of the properties in question are not in the District's legislative boundaries. He explained the purpose of the guardrails was to protect the works of the District.

Mr. Hanson stated the cost of the guardrail installation was up to $340,000. He indicated if Staff could procure used guardrail the cost would be reduced.

Attorney Palen stated in 1998 there was a lawsuit with a settlement wherein certain lots were granted access to 162nd. He noted the settlement was in perpetuity meaning the access stays with the property; therefore, guardrails could not be installed blocking those properties access. He confirmed access for those identified lots was not free because an annual fee was established in the settlement.

Mr. Hanson stated Staff could install guardrails at the corner of 162nd and E. Sycamore Drive fairly quickly. He confirmed the Town of Loxahatchee Groves was asked to notice their residents.

A motion was made by Supervisor Argue and seconded by Supervisor Farrell to approve the funding for up to $340,000 for the installation of either new or used good condition guardrail along 162nd Drive N. and to approve the withdrawal of the necessary amount up to $340,000 from the District's Fund Balance to cover the cost of the guardrail from the annual FY2024 Budget.

President Accomando called for Public Comment. There being none, President Accomando called the vote. The motion passed unanimously.

7.7 Consider: Item was DELETED.

7.8 Consider: Pursuant to ITB-2024-003-0-2024/MP and the R-3 Construction Program consider Selection of Contractor and Award of Contract for Construction

Mr. Foy stated the bid for 140th from 61st to Orange; Tangerine from 140th to Avocado; and 61st from 140th to Avocado were advertised and bidder packets were received. He stated there

were two bidders which were responsive and responsible. He noted both bidders were awarded other R-3 Projects.

Mr. Foy confirmed of the two bidders, R&D Paving was the lowest bidder at $2,973,709. Staff was recommending the Board approve Staff to enter into contract negotiations with R&D Paving.

A motion was made by Supervisor Argue and seconded by Supervisor Farrell to accept the two (2) responses; waive any minor irregularities in bid responses; award the contract to R&D Paving LLC in the amount of $2,973,709; and authorize the President to sign the contract; subject to legal and engineering.

President Accomando called for Public Comment. There being none, President Accomando called the vote. The motion passed unanimously.

8. OTHER GOVERNMENTAL UPDATES

Mr. Foy stated the Board heard a Presentation regarding the medical and dental office proposed for the southwest corner of Seminole Pratt and Northlake. He noted the project on the southeast corner of Seminole Pratt and Northlake had run into issues from Palm Beach County.

Mr. Foy announced the property north of Rustic Lakes had been annexed into Palm Beach Gardens with a proposed development of 272 residential buildings. He explained the area was added legislatively to the District boundaries in 2008 with an Agreement to accept the drainage from the five (5) parcels to the east of Bay Hill, through Bay Hill. He noted on the Palm Beach County website the parcels were shown as a part of Northern Palm Beach County Improvement District. Mr. Foy stated the Developer was then told Indian Trail would have to release the parcels from the Agreement.

Supervisor Argue asked for the Agreements to be sent to the Board. She noted the Drainage Agreement would never have been based on high density residential units. She felt Palm Beach Gardens should provide the drainage.

Mr. Foy confirmed there was no drainage permit and there were many issues to work out. He stated the Developer would still have to meet the District's criteria.

Mr. Hanson provided an update regarding the FPL Transformer Property which the District owned stating there was a pool and fences built without permits. He noted since the District owned the property; the District would be liable for accidents. He confirmed notices were sent to landowners with encroachments onto District property. He noted some landowners were removing the obstructions. He said Operations were going to begin mowing the area in the next weeks.

President Accomando provided an update regarding the TPA meeting she attended. She stated the TPA was looking for comments on Vision 2050. She noted some items in the plan: Seminole Pratt Whitney from Southern to Okeechobee would be six (6) lanes; Okeechobee from Seminole Pratt Whitney to 140th from two (2) to four (4) lanes; and 60th from the M-Canal to Seminole Pratt from two (2) to four (4) lanes. She encouraged the Board Members to get with Mr. Foy and Mr. Hanson regarding Vision 2050.

Supervisor Argue stated the Board should take the same position as in the past. She noted the District should send a forceful letter to reiterate the Board's position. She noted the widening of 60th west of Seminole Pratt Whitney was north of the M Canal on the County Map. She stated it was a mistake and should be fixed. She also stated the widening of 60th West of 140th should not be done without the widening of 60th east of 140th.

She stated all connections proposed by the County ended up connecting to District Roads.

Mr. Hanson stated Vision 2050 was totally contradictory to the County's position on District Roads.

Supervisor Argue asked if a sidewalk was being installed on 120th between Orange and Hamlin. Mr. Hanson stated there was limited right-of-way. He stated Staff was suggesting to the County for some one-way streets in the area east of Coconut, but the County was not in agreement. Mr. Foy stated there was a drainage problem on the west side of 120th and there was no room on the east side.

Mr. Hanson stated Grapeview south of Tangerine did not have sidewalks, but Staff can look at adding a sidewalk in future budgets.

Supervisor Argue stated the School District had a Board responsible for Districting the houses to the schools. She said there were promises made when Minto was approved essentially stating Indian Trail kids would not be displaced; however, the School District was redistricting anyway. She confirmed there was going to be another school built in Westlake.

There was Board discussion regarding landowners building on the majority of their property increasing the drainage burden on District infrastructure. Mr. Foy stated the County's criteria does not deal with the drainage burden. Mr. Foy confirmed he had suggested storage criterion, but the County had not adopted the suggestion.

Supervisor Argue asked if the solution could be brought back for the Board to review. Mr. Foy stated ground was lost every day but there was a technical solution. Supervisor Argue stated the District could require permits. She suggested increasing the assessments to the properties developing a higher percentage of the property (impervious v. pervious). Mr. Foy stated the District did not review any of the onsite work.

Mr. Hanson stated he would also like to bring back the unit consolidation and assessment structure.

9. PUBLIC INPUT

Public Input was called earlier in the meeting.

10. CONSENT AGENDA

Supervisor Argue recused herself from Consent Agenda Item 10.14 (Form 8B on file). She stated the event was at the Pavilion on the Northside of ACP and the course went through both the North and South sides.

A motion was made by Supervisor Farrell, seconded by Supervisor Jordano and unanimously passed (except for Item 10.14 which was passed) approving the following Items on the Consent Agenda:

10.1	Approval:	Contract with McIntosh CPA for Senior Accounting Position.
10.2	Approval:	Resolution No. 2024-004, Declaring Surplus and Authorizing Disposition of Certain Fixed Assets as Surplus per Chapter 274. F.S.
10.3	Approval:	FY25 Annual Regular Board Meeting Schedule.
10.4	Approval:	PBCWUD SP-0520 Modification.
10.5	Approval:	FPL SP-0551, DB on 44th from 140th to Avocado.
10.6	Approval:	First Amendment to the Rubin Turnbull Consulting Services Agreement to include Subcontract with Calvary Strategies for Public and Media Relations.
10.7	Approval:	Facility Use Permit for Cruizin for Crime Stoppers 14th Annual Motorcycle Ride.
10.8	Approval:	Facility Use Permit for Wellness Wednesday.
10.9	Approval:	Facility Use Permit for Winterfest of the Western Communities.
10.10	Approval:	"Long Term" Facility Use Permit for Wellness Wednesdays at Hamlin House.
10.11	Approval:	"Long Term" Facility Use Permit for the Academy of Dance and Acrobatics at Hamling House.
10.12	Approval:	Facility Use Permit for Outsiders Drill Team.
10.13	Approval:	"Long Term" Facility Use Permit for Exciting Cleats LLC.
10.14	Approval:	Facility Use Permit for Barky Pines Animal Rescue & Sanctuary's 6th Annual Puppy Love 5K.
10.15	Approval:	April 17, 2024, Budget Workshop Meeting Minutes.
10.16	Approval:	April 24, 2024, Budget Public Hearing Minutes.
10.17	Approval:	May 1, 2024, Reconvened Budget Workshop Meeting Minutes.

10.18 Approval: Third Amendment to Executive Director Second Employment Agreement.
10.19 Approval: Facility Use Permit for Breakthru Athletic League.

Supervisor Johnson left the meeting after voting on the Consent Agenda.

11. STAFF PRESENTATIONS

Mr. Hanson stated Staff was seeing an uptick in the number of obstructions on the canal banks. He gave an instance of a resident in Royal Palm planting trees, installing a fence, and other obstructions. He confirmed the District had told the owner not to obstruct the canal easement but now attorneys are involved.

Mr. Hanson stated the replacement of Temple Park equipment would be $350,000 to $500,000. He was going to bring it back for Board discussion. He stated there was no way to repair the Park.

Mr. Hanson confirmed the District submitted for the NHEP Grant reimbursement.

Mr. Robinson provided an update on the in-house R-3 paving project on 89th; the 640 acres; 180th R-3 project, and Santa Rosa Groves.

Mr. Foy confirmed the bid was out for the M-2 Bypass Project.

12. SUPERVISOR BUSINESS

Supervisor Argue commented on the poor condition of Cheetham Hill.

13. REPORTS

Attorney Viator stated the Attorney's Report was attached as backup. She also requested the Board consider an Attorney/Client Session regarding matters relating to the Minto/SID litigation. Mr. Hanson stated Staff would coordinate date and time for meeting.

A motion was made by Supervisor Argue, seconded by Supervisor Farrell, and unanimously passed to receive and file the following reports:

13.1 District Attorney Report
13.2 District Engineer Report
13.3 Operations & Maintenance Report
13.4 Parks and Recreation Report
13.5 Public Records Requests
13.6 Resident Correspondence
13.7 Meeting Notice
13.8 Assistant Executive Director Report

14. ADJOURNMENT

There being no further business to come before the Board, the Meeting was adjourned.

_____
President

_____
Secretary

AGENDA ITEM NO. 11.5

INDIAN TRAIL
IMPROVEMENT DISTRICT
EST. 1957

Executive Summary

REGULAR MEETING BOARD OF SUPERVISORS

DATE:	January 15, 2025
SUBMITTED BY:	Scarlet Cantley
DEPARTMENT:	Administration
ITEM TYPE:	Minutes
AGENDA SECTION:	**CONSENT AGENDA**
SUBJECT:	Approval: September 18, 2024 - Regular Board Meeting Minutes
BACKGROUND:	
FISCAL IMPACT:	
RECOMMENDATION:	Motion to approve the September 18, 2024 - Regular Board Meeting Minutes.

ATTACHMENTS:
Final 2024-0918 - Regular Board Meeting Minutes.pdf

MINUTES OF REGULAR BOARD MEETING OF THE
BOARD OF SUPERVISORS
INDIAN TRAIL IMPROVEMENT DISTRICT
September 18, 2024

A Regular Meeting of the Board of Supervisors of Indian Trail Improvement District was held at 6:00 p.m. on September 18, 2024, located at the District Administration Building, 13476 61st Street North, West Palm Beach, FL 33412. This Meeting was in-person and used the Zoom Webinar Meeting platform for public participation. Present during the Meeting were Supervisors: Elizabeth Accomando, Patricia Farrell, Keith Jordano, Betty Argue, and Michael Johnson. Also, in attendance were: Burgess Hanson, Executive Director; Robert Robinson, Assistant Executive Director; Miriam Heisser, Chief Human Resources Officer; Kenny Lawrence, Facilities, Parks and Recreation Director; Jeff Sisolak, Parks and Recreation Manager; and Kayla Heisser, Parks Specialist; Scarlet Cantley, Administration and Grants Coordinator; Carey Nelson, Technology Infrastructure and Cyber Security Coordinator; Mary M. Viator, Esq. and Frank Palen, Esq. of Caldwell Pacetti Edwards Schoech & Viator LLP; Bernard Lebedeker, Esq. and Jeffrey C. Pepin, Esq. of Reid Burman Lebedeker Xenick Pepin; and Engineer Jay Foy, P.E. of Stormwater J Engineering, Inc. Special Guests in attendance were: Captain Turner, PBSO; Kim Delaney from Treasure Coast Regional Planning Council; and Andrew Jimenez from EGIS Insurance.

CALL TO ORDER

President Accomando called the Meeting to Order, led in the Pledge of Allegiance, and called Roll.

4.1 PRESIDENT'S WELCOMING REMARKS

President Accomando welcomed everyone and asked for all cell phones to be placed on silent. She encouraged everyone to check out the information on the District website. She reminded everyone present to fill out and submit a Comment Card in order to address the Board.

4.2 SUPERVISOR'S WELCOMING REMARKS

Supervisors welcomed everyone to the Meeting.

Supervisor Farrel provided an update regarding the Equestrian Committee.

5. AGENDA APPROVAL

President Accomando called for any additions, deletions, or changes to the Agenda.

Mr. Hanson asked for Mr. Lebedeker and Mr. Pepin be added to the Agenda under Presentations. President Accomando stated the addition would be Item 6.4.

A motion was made by Supervisor Farrell, seconded by Supervisor Jordano, and unanimously passed to approve the Agenda, as amended, including Item 11.6 which has a new award number assigned by the State; therefore, the Agreement printed for signature reflects the new award number of 693J32540045; and adding Item 6.4 – Mr. Lebedeker and Mr. Pepin's Presentation.

There was no Public Comment.

6. PRESENTATIONS

6.1 PBSO Update – Captain Turner

Captain Turner updated the Board on accidents in the District.

President Accomando thanked Captain Turner.

6.2 Fire Rescue Update – District Chief Amanda Vomero

District Chief Vomero had to leave the Meeting before the report could be given.

6.3 Lot Stormwater Storage

Mr. Foy provided a presentation on Lot Stormwater Storage, the Volumetric Consideration not the duration. He explained he used the M-1 Basin as the discussion basin. Using slides, he

showed maps and graphs. He stated only the house was supposed to be raised up with fill. He explained the more the fill the less the storage. He noted when one property added excessive fill the property next door receives the water. He showed pictures of Tropical Storm Isaac with houses raised appropriately versus flooded due to neighbor having excessive fill. He explained the empty lots were making up the difference. He confirmed the canals also store water because the District has lowered elevations in the canals and Staff performs pre-storm drawdowns as well.

Mr. Foy reviewed his recommendation to Palm Beach County stating if the permit comes in and only uses 20 percent or less, a fill permit was not needed; use a pre-storm storage for new buildings; and equal compensating storage before and after.

Following discussion regarding the excess fill, it was the consensus of the Board to use the same modeling based on what was currently allowed on every property. This would basically compare what the water control plan was predicated upon versus what was allowed today.

6.4 Mr. Lebedeker and Mr. Pepin Presentation

Mr. Lebedeker and Mr. Pepin updated the Board regarding an issue involving the Final Order issued by the Court in the Minto/Sid case. He stated the issue involved the County and Minto. He stated, through meetings with Minto's Attorneys there was discussion regarding the expansion (to five lanes) and the extension (to Seminole Pratt Whitney) of 60th Street which would accommodate the traffic from Minto; therefore, not requiring the connection to Persimmon. He noted Minto initially was agreeable to joining the District in pursuing the 60th Street project with the County.

After receiving the Final Judgement, the County Attorney Staff opined the language to mean Indian Trail roads were not public, but private roads; therefore, public funds could not be used to maintain, repair or expand the roadways and the Sherriff did not have jurisdiction to

enforce traffic laws within the District. The District strongly disagreed with the County's opinion because it was not the legal opinion of the Court in the Minto/SID case.

Mr. Lebedeker stated it was undisputed Indian Trail was a public entity. He noted a public entity could not have private property; however, it could regulate the property. He explained per Florida Law the Sherriff has jurisdiction throughout the County and the County has original jurisdiction over all streets and highways located within its boundaries. He stated the Florida Traffic Code defines a private roadway as "a privately owned way or place used for vehicular traffic by the owner."

Mr. Lebedeker noted there were anonymous letters sent to FDOT, IRS and the SEC stating the District was using public money to build private roads.

Mr. Lebedeker stated he had met with Appellate counsel because Minto had appealed the lawsuit. He stated the County had not asked Minto to pay $18 million pursuant to the approval Minto obtained for development because Minto lost the lawsuit and could not connect to Persimmon as required in the development approval.

President Accomando stated there should be a Resolution from the Board with information to be released as to what the District has been facing and explaining exactly the definition of District roads not only to the Community but to neighboring municipalities and the County as well. She stated people do not understand.

Supervisor Argue stated whatever the Indian Trail Board has done has always been about the District, its residents, and protecting the District taxpayers. She stated the lawsuit was important to establish and answer the question regarding the roads. She suggested a Resolution adopting what was in the Court Order and provide direction to Staff with the authority to defend

and assert District rights as set out in the lawsuit and to take any and all steps necessary to defend and assert the rights of the District.

Supervisor Argue stated Minto was a private entity making unfounded complaints and going after a public entity and costing the District tax dollars. She noted the Final Order has been entered and the District needed to stand strong. She agreed the community deserved to know what was going on and the pressure the District was under.

A motion was made by Supervisor Argue and seconded by Supervisor Jordano authorizing a Resolution explaining the Final Judgement language very clearly from the legal perspective and further authorizing Staff to take necessary actions to protect the rights of the District in accordance with the Final Judgment. The Resolution should include and reiterate the statutory definition of District roads.

It was the Consensus of the Board to educate the public regarding the misinformation through social media and the District website.

Mr. Hanson clarified he would immediately begin the process to educate and to take necessary actions to protect the rights of the District. It was the consensus of the Board for him to proceed with any and all steps needed.

President Accomando called for Public Comment.

There was an inquiry regarding adverse possession.

Following Public Comment, President Accomando called for the vote. The motion passed unanimously.

The Board thanked Mr. Lebedeker and Mr. Popin

7. REGULAR AGENDA

7.1 Consider: The Installation of New Guardrail on Boundary Road Segments – 162nd Dr, Sycamore Dr., and 180th Ave.

Mr. Hanson stated Staff was recommending taking the necessary actions on 162nd Dr. and East Sycamore Dr. because of side-by-sides and even residents of Loxahatchee Groves using 162nd. He indicated Staff was requesting to install guardrails along 162nd Dr. and East Sycamore to control cut through traffic. He also requested authorization to transfer funds for the guardrails from the Fund Balance. He explained in the backup the cost was for new guardrails; however, Staff will purchase used guardrails if available to save the District money. He stated the new guardrail cost to be transferred for East Sycamore Dr. was $74,120; and for 162nd Dr. was $317,120 (excluding settlement properties). He confirmed the District had not received any special driveway permits for 180th Ave. Staff was requesting $74,120 for the guardrails to be funded through the R-3 Bond because it was part of the overall project.

Even though she agreed with the project, Supervisor Argue expressed concern regarding the amount of funds needed for 162nd being transferred in totality from Unit 6 Fund Reserves.

Mr. Hanson stated the District could not afford to delay the guardrail installation on 180th because the new sidewalk and landscaping would be destroyed by vehicle crossings.

Supervisor Argue stated the guardrails on 180th had already been approved. She asked if Staff could just place the guardrails along the cut through at East Sycamore and 162nd; and bring the other guardrail locations back to the Board in October.

Mr. Hanson stated he would bring the Item back to the Board in October.

9. PUBLIC INPUT

The time being 7:30 PM, President Accomando called for Public Comment. She also explained the procedures for making Public Comments both in-person and virtually via Zoom. She reminded the Public there was a three (3) minute time limit per person and all comments should be addressed to the Board.

A residents addressed the Board regarding semi-trucks in the District stating trees and grass were being removed from lots to accommodate trucks, trailers, and equipment on the lots.

Supervisor Farrell read a Comment Card into the record regarding the millings lottery and asking for Cheetham Hill south of Okeechobee Blvd. to be milled or paved.

A resident addressed the Board regarding the Medical Building presentation to the ALA stating water retention was not on the plans.

Supervisor Farrell read another Comment Card into the record regarding the additional speed bumps on Persimmon. The resident was requesting additional speed bumps between the roundabout and Mango because speeding was dangerous for kids walking to and from the bus stop.

Mr. Robinson confirmed the additional manufactured speed tables on Persimmon had been approved by Fire Rescue and FDOT safety procedures and placement were followed.

7.2 Consider: Interlocal Agreement (ILA) with Treasure Coast Regional Planning Council (TCRPC) for Strategic Planning Services.

Mr. Hanson stated Strategic Planning was previously proposed by the Board. He stated TCRPC has experience in facilitating Strategic Planning. He noted the Board and Staff would be heavily involved with the process. He confirmed the public would also be involved.

Ms. Delaney stated the Planning Council was available to work with local agencies. She explained the scope of work was attached to the Agreement explaining the process. She reiterated TCRPC would meet with the individual Board Members and Staff to understand the issues and priorities; and then facilitate discussions with the District and the Public to identify the major issues and priorities to draft a Strategic Plan document.

A motion made by Supervisor Argue and seconded by Supervisor Jordano to approve the ILA between ITID and TCRPC for Strategic Planning Services.

President Accomando called for Public Comment. There being none the motion passed unanimously.

Ms. Delaney complimented the Board on having a Representative attending the TCRPC meetings because the District brings a different perspective to the conversation.

President Accomando thanked Ms. Delany.

8. OTHER GOVERNMENTAL UPDATES

8.1 Staff had no Other Governmental Updates.

President Accomando provided an update on Wellington annexing property east of Southern Blvd. stating commercial and high density was going to be approved.

President Accomando called for a five-minute break.

9. PUBLIC INPUT

Public Input was called earlier in the meeting.

10. FACILITIES, PARKS & RECREATION AGENDA

10.1 Approval: Facility Use Permit for the Academy of Dance and Acrobatics

Mr. Lawrence reviewed the permit application stating the Dance group would normally be in the District Holiday Frontier Parade and Event. He noted the permit was for 11am to 6pm at the Amphitheater.

A motion was made by Supervisor Argue and seconded by Supervisor Farrell to approve the Facility Use Permit for Hope Powell to host The Academy of Dance and Acrobatics "Holidazzle", subject to Staff and Legal approval.

President Accomando called for Public Comment. There being none, the motion passed unanimously.

10.2 Consider: Acreage Landowners Association's "Halloween on Citrus Grove" Event

Mr. Hanson confirmed the ALA had removed the original permit and submitted a new permit. He noted the ALA had been working with Mr. Lawrence, Legal, Ms. Heisser and EGIS. He confirmed there was a representative from EGIS available to answer questions.

Mr. Hanson explained the new permit was submitted by the ALA, not as a Service Provider but as an independent entity, and the event would not have anything to do with the community event outside the park.

Mr. Lawrence stated the Permit was requesting use of the Park from 3:00 pm to 10:00 pm with the event being from 5:00pm to 9:00pm. The ALA was also requesting a food truck, one bounce house and between four to six PBSO Officers. The ALA has also agreed to indemnify the District. The ALA asked for a fee waiver for the event.

Mr. Lawrence stated the District was requesting no alcohol inside the park; no additional cars be allowed inside the park once the event begins; parking passes for vehicles within the park; hold harmless agreement with the District; an event safety manual on-site with a site plan; additional restroom facilities with extra wash stations.

Mr. Lawrence stated the District would provide one PBSO officer to protect the park beginning at 10pm until 2am, and if everything was calm around midnight, the officer would be asked to patrol other District Parks.

Mr. Lawrence cautioned after 8pm when the teenagers come into the park the event gets hectic with a potential for fights.

Andy Jimenez with EGIS Insurance stated his concerns regarding potential District exposure. He stated he had not seen the current submitted permit application. He reiterated an operation handbook should be required.

Mr. Hanson explained for safety reasons the parking lot was shut down after the event began. He noted the parking lot was very small and tight. He stated Fire Rescue must be able to maneuver in the parking lot.

Supervisor Argue expressed concern regarding ADA parking availability. Mr. Hanson stated as a condition of the permit the ALA would have a person staff the parking lot and allow a person with a Handicapped Tag or Permit to park in the lot if there was availability.

Mr. Jimenez stated there would be insurance requirements as a part of the permit as well as indemnification to the District and any potential claims filed against the District. He stated the ALA insurance policy should also include the sexual molestation policy. He explained if the ALA's insurance policy was not sufficient to cover all claims the District's Policy would be used as backup. He noted the District owned the Park so the maintenance and upkeep falls on the District; however, through the permit the District was transferring the risk to the entity using the park. Mr. Jimenez stated it was a requirement to have the District as an additional insured.

Supervisor Argue stated Halloween on Citrus Grove was an organic event the District has never controlled or been responsible for. She stated for safety purposes the District has in the past been a part of the solution by having the Park Open for Trick or Treating for the community to participate. This year the District had decided not to be a part of the event. She explained the ALA was trying to have a safe area for trick or treating inside the Park. She stated in the past when the Park was closed people would scale the fence and tear up the park. She said what the Staff did in the park in previous years was positive. She noted what residents did on their private property was out of the District's control.

Supervisor Argue stated the Permit Application attempted to resolve the concerns Staff had regarding liability issues. She stated the ALA used to host events in the District.

President Accomando stated the District was not trying to shut down what the residents want to do "Halloween On Citrus Grove", but the Board and Staff were trying to protect the District.

A motion was made by Supervisor Jordano and seconded by Supervisor Argue approving the ALA Permit for "Halloween in Citrus Grove" event with legal formalizing the indemnity agreement.

Captain Turner stated whatever law enforcement was needed for the event inside and outside the Park, PBSO would provide at no cost to the residents.

Mr. Hanson clarified the Staff was suggesting denying the original submitted permit because it tied the road to the event. He explained the new permit was specific to the Park. He noted Staff still had concerns, but it was up to the Board. He stated the Board had previously agreed to close the Park during the community event. Mr. Hanson stated Staff did not have a recommendation for the Board on the new permit.

Mr. Jimenez stated background checks were required for District Volunteers, however for volunteers outside the District it should be recommended.

President Accomando stated it was not the event holder, but the scope of the event.

Ms. Heisser stated normally the District did not compromise regarding background checks during events with children involved.

Supervisor Argue stated if Staff was recommending background checks for all rentals and events then the Board needed to put it into a policy.

Mr. Hanson stated there were rentals and event permits and both were different. He agreed the Board should have a policy regarding background check requirements for events.

Mr. Jimenez stated he had a copy of the ALA's insurance policy.

Mr. Lawrence stated no Staff would be present at the event, except at the beginning he or Mr. Sisolak would verify vendors insurance.

Bob Morgan addressed the Board stating the ALA Insurance Policy listed Indian Trail and Palm Beach County as additionally insured. He has not been told if there were any other requirements.

Supervisor Argue stated any additional required riders to the insurance policy needed to be communicated to the ALA.

Mr. Hanson stated the site plan was an important safety requirement for all events because it communicated where vendors were located to emergency responders in a situation.

Supervisor Jordano amended his motion, which was seconded by Supervisor Argue, to also include the following conditions: a fee waiver, limited controlled parking in the park for ADA, extra restrooms facilities, adding sexual, abuse, molestation insurance rider, and creating and submitting a site plan within two weeks to the District.

President Accomando called for Public Comment.

A resident who started "Halloween on Citrus Grove" many years ago stated it was never intended to have food trucks. She noted the event was just for people to have fun. She stated the vendor's selling food was crazy because the original event began to give away candy. She concluded the event needed to be cut back.

Other residents stated there was always going to be a risk with or without an event.

The Board thanked Mr. Jimenez for his time.

Attorney Viator stated the standard under FS 768.28(9)a was there had to be a showing of bad faith, with malicious intent, or with wanted and willful disregard for the District Employees, Officers, or Agents, to be held liable.

President Accomando called for the vote and the amended Motion passed. President Accomando was opposed.

Mr. Hanson requested the District Halloween event the Saturday before Halloween be cancelled.

A motion was made by Supervisor Argue and seconded by Supervisor Jordano to cancel the District sponsored Halloween Event.

President Accomando called for Public Comment. There being none, she called for the vote. The motion passed. President Accomando and Supervisor Farrell were opposed.

11. CONSENT AGENDA

Supervisor Argue asked what changes were made to the Organizational Chart and Salary Schedule in Item 11.4.?

Mr. Hanson stated Staff had not really made any changes to the Organization Chart or the Salary Range.

Ms. Heisser stated the Merit increase of up to five percent was in the FY25 Budget.

Mr. Hanson stated it was getting harder to find heavy equipment operators and qualified Staff.

Supervisor Argue stated if the District budgeted five percent merit increase across the board for all employees, but twenty-five percent of the employees were not eligible, where does the twenty-five percent of the budgeted money go? What was the amount? Mr. Hanson stated he would get the amount for the Board.

Supervisor Argue stated the District needed to look at mowing.

A motion was made by Supervisor Argue, seconded by Supervisor Jordano, and unanimously passed approving the following items on the Consent Agenda with the addition to Item 11.6 mentioned during Agenda Review:

11.1	Approval:	FPL SP-0555, Line and DB on 82nd Rd N.
11.2	Approval:	FPL SP-0556, Replace Pole and DB on 82nd Rd N.
11.3	Approval:	FPL SP-0557, DB and HH on 90th St N.
11.4	Approval:	Organizational Chart and Salary Schedule Fiscal Year 2025
11.5	Approval:	District Holiday Calendar FY25
11.6	Approval:	Safe Streets for All (ss4a) Federal Grant Agreement
11.7	Approval:	Change Order #2 – R3 Project, 180th/60th Street N.
11.8	Approval:	Resolution No. 2024-006, Adopting Goals, Objectives, Performance Measures, and Standards for Indian Trail Improvement District.
11.9	Approval:	Grant Modification – Santa Rosa Groves Pump Station (4486-105-R HMGP).

12. STAFF PRESENTATIONS

Mr. Hanson stated the District would try to secure funding for the 640 acres. He hoped to finish the GEO Tech and begin working on the conditions. He noted the Board may want to go to market next year regarding bond funding to start on the surface levee. He stated the cost of the surface levee would be approximately $20 million (based on contracting the project out).

Mr. Hanson reminded the Board to begin thinking about the District Legislative Priorities. He noted Resiliency Florida and some grants require "Clean Water" to be included so the District many want to request including "Clean Water" in the Indian Trail Charter.

Supervisor Argue asked if the Water Control Plan was amended to include the 640 Acres. Mr. Foy stated the Water Control Plan was for the M-1 and M-2 Basins combined and the SFWMD permit was submitted with the combined basins. He confirmed a preliminary resolution was prepared but never was adopted by the Board because the 640 Acres was not ready.

Supervisor Argue stated to consider bond funding the 640 Acres needed to be included in a Water Control Plan. She asked if the Resolution could be brought back to the Board. She noted

the 640 Acres did not benefit the M-2 Basin; therefore, residents in the M-2 should not be paying for it.

13. SUPERVISOR BUSINESS

Supervisor Argue stated she wanted to make sure the District had the correct resources available to get Board priorities completed.

14. REPORTS

A motion was made by Supervisor Farrell, seconded by Supervisor Jordano, and unanimously passed to receive and file the following reports:

14.1 District Attorney Report
14.2 District Engineer Report
14.3 Assistant Executive Director Report
14.5 Operations & Maintenance Report
14.6 Parks and Recreation Report
14.7 Public Records Requests
14.8 Resident Correspondence
14.9 Meeting Notice

13. ADJOURNMENT

There being no further business to come before the Board, the Meeting was adjourned.

_____
President

_____
Secretary

AGENDA ITEM NO. 11.6

INDIAN TRAIL
IMPROVEMENT DISTRICT
EST. 1957

Executive Summary

REGULAR MEETING BOARD OF SUPERVISORS

DATE:	January 15, 2025
SUBMITTED BY:	Jay Foy
DEPARTMENT:	Engineering
ITEM TYPE:	Permits
AGENDA SECTION:	**CONSENT AGENDA**
SUBJECT:	Approval: SP-0559 13980 89th WM with conditions and attachments.
BACKGROUND:	This special permit is to install 85' of 6" DIP water main crossing 140th Avenue North along 89th Pl N.
FISCAL IMPACT:	There are no fiscal impacts as the permittee is responsible for payment of permit review and construction observation costs incurred by the District.
RECOMMENDATION:	Motion to approve SP-0559 13980 89th WM with conditions and attachments.

ATTACHMENTS:
2024_626_SP-0559 13980 89th WM.pdf

SPECIAL PERMIT No. SP-0559

THIS PERMIT, granted this 15th day of January, 2025, by Indian Trail Improvement District, hereinafter referred to as the "District", 13476 61st Street North, West Palm Beach, Florida 33412, to David Bowden, hereinafter referred to as the "Permittee", is a non-exclusive permit to install 85' of 6" DIP water main crossing 140th Avenue North along 89th Pl N, as shown on 9 sheets titled "Water Only Plan" dated 10/21/24, attached hereto and made a part thereof".

W I T N E S S E T H:

1. Permittee agrees to obtain any necessary consents from the owners of the subject property, in the event the District does not own said lands; to obtain any and all applicable federal, state, and local permits required in connection with Permittee's use of the land; and at all times, to comply with all requirements of all federal, state, and local laws, ordinances, rules and regulations applicable or pertaining to the use of the lands by Permittee pursuant to this Permit.

2. Permittee understands and agrees that the use of the property pursuant to this Permit is subordinate to the rights and interest of the District and to the extent applicable, that of the landowner. Further, Permittee does hereby stipulate that the Permittee is not relying upon any representations by the District whatsoever regarding the District's right, title, or ownership as to the subject property for which this Permit is sought.

3. District specifically reserves the right to maintain its facilities located on the property; to make improvements; add additional facilities; maintain, construct, or alter roads; maintain any facilities, devices or improvements on the property which aid in, or are necessary to, District operation; and the right to enter upon the lands at all times for such purposes. Permittee understands that in the exercise of such rights and interest, the District, from time to time, may require Permittee to relocate, alter or remove its facilities and equipment or other improvements made by Permittee pursuant to this Permit which interfere with or prevent the District, in its reasonable opinion, from properly and faithfully constructing, improving, and maintaining its facilities. District retains the right to enter upon the lands and make said relocation, alterations or removal of Permittee's facilities, equipment, and other improvements if Permittee fails to do so within a reasonable time; and Permittee hereby agrees to reimburse District for all its costs and expenses incurred in connection therewith upon demand.

4. Permittee agrees that it will not use the property in any manner which materially interferes with the District's use of lands or causes a hazardous condition to exist.

5. The District assumes no responsibility for the ownership, operation and/or maintenance of the facilities permitted herein.

6. Permittee shall adhere to the General and Special Conditions attached hereto and made a part hereof.

7. Permittee shall, at its own expense, promptly repair or replace any and all damage to the facilities, roads and rights-of-way of the District resulting from the installation, operation, maintenance, repair, or removal of the above, and restore same to a condition substantially equal to that which existed immediately prior to infliction of the damage.

8. Permittee shall, at its own expense, promptly repair or replace any and all damage to the facilities of others resulting from the installation, operation, maintenance, repair, or removal of the above and restore same to a condition substantially equal to that which existed immediately prior to infliction of the damage.

9. Permittee shall, at its own expense, upon ninety (90) days written notice to Permittee from the District, remove or relocate any facility of the Permittee that is found by the District to be interfering in any material way with the safe, convenient, or continuous use, maintenance or repair of any District facility or road. Failure or neglect of the Permittee to remove or relocate such facility within the allocated time may result in District's removal or relocation of said facility, wherein the Permittee shall promptly pay the District for all District expenses incurred by such removal or relocation.

10. Permittee shall, at its own expense and within a reasonable time, adjust the positions and elevations of its facilities as may be required in connection with future improvements to, or construction of, works of the District.

11. Permittee does hereby indemnify and hold harmless the District, its Board of Supervisors, officers and personnel against any claims, losses, damages (including consequential), expenses, or legal fees that might arise out of, or result from, the implementation of the proposed project of the Permittee.

12. If Permittee shall violate any of the terms or conditions of this Permit or shall not correct or remedy same within thirty (30) days of receiving written notice from the Board of Supervisors of the District or its duly authorized representative, then, and in that event, said Board of Supervisors may, at its option, revoke, cancel and terminate this Permit.

13. This Permit may not be assigned without approval of the Board of Supervisors of the District.

14. Permittee shall reimburse the District for its legal, engineering, and other expenses incurred as a result of the implementation of the project during permit review and approval, and during construction.

15. If either Party hereto is required to bring a court action to enforce the provisions of this Permit, the non-prevailing party in such action shall be responsible for all reasonable expenses, including, but not limited to, attorney's fees and litigation expenses.

16. Construction shall begin within 2 years from the date of issuance. An extension of 2 years may be granted by the District Administrator upon receipt of a written request. Further extensions require Board approval.

INDIAN TRAIL IMPROVEMENT DISTRICT

WITNESSES:

By: _____ Date: _____

_____

Name Typed:_____

_____

Title: _____

President or Vice President, Board of Supervisors

Note: The District assumes no responsibility for the ownership, operation and/or maintenance of the facilities permitted herein.

P E R M I T I N F O R M A T I O N

OWNER

David Bowden — 561-386-1266

Name — Business Phone

13980 89th Pl N

Address

West Palm Beach, Florida 33412 — framins@aol.com

Other

ATTORNEY

Name — Business Phone

Address

Other

ENGINEER

Josh Learman — 561-212-1994

Name — Business Phone

65 SE 5th Ave

Address — floridasoilandwater@gmail.com

Delray Beach, Florida 33483 — Other

OTHER REPRESENTATIVE/PROFESSIONAL

Name — Business Phone

Address

Other

GENERAL CONDITIONS

A. GENERAL

1. This Permit does not constitute a waiver or approval of any other permit from other agencies which may be required for the total project.

2. Notification shall be given to the District Engineer forty-eight (48) hours prior to commencement of construction. The District Engineer shall establish points of construction that require inspection, if any. When the work is deemed completed, a final inspection shall be held by the District Engineer in the presence of a representative of the Permittee.

3. The installation shall be constructed in full accordance with the approved plans and specifications. Deviations from the plans shall be coordinated with the office of the District Engineer.

4. When working in District road rights-of-way, not more than one-half (1/2) of the road or street shall be closed and traffic shall be controlled so as to provide minimum hindrance. All traffic control operations shall conform to the most current issue of the Florida Department of Transportation publication, Manual on "Traffic Controls and Safe Practices for Street and Highway Construction, Maintenance and Utility Operations".

5. The Permittee shall protect the District against liability, public or private, resulting from their operation hereunder. The District Engineer is deemed the final authority as to the quality and quantity of work required to satisfy the terms and conditions of the Permit.

6. This Permit shall not be construed as a representation that the District has sole authority with respect to the pertinent property.

7. Permittee shall retain a professional engineer licensed in the State of Florida, to conduct on-site observations of construction, to prepare a certification of completion of construction, and to review record drawings for adequacy. The required improvements shall not be considered complete until a certificate of completion, certifying to construction in conformance with the approved drawings, and the final project records have been submitted to, reviewed, and approved by the District Engineer.

The engineer's certification shall be as follows:

I hereby notify the Indian Trail Improvement District of the completion of construction of the permitted project and certify that the work has been constructed in substantial conformance with the drawings permitted by the Indian Trail Improvement District. Copies of the Record Drawings, in the proper format, are enclosed with deviations noted.

8. Upon completion of the installation and after the final inspection, THE PERMITTEE SHALL DELIVER TO THE DISTRICT OFFICE ONE COMPLETE SET OF "RECORD DRAWINGS". FAILURE TO PROVIDE RECORD DRAWINGS MAY RESULT IN THE REVOCATION, CANCELLATION AND TERMINATION OF THIS PERMIT. The Record Drawings should include (1) set of PDF files, and the corresponding digital AutoCAD file. All items should be on the Florida State Plane Coordinate System, NAD 1983 East Feet, and geo-referenced to an identified Palm Beach County section center. If Permittee cannot provide, District Engineer will at Permittee's expense.

9. Roadway Pavement replacement shall be in accordance with the "Typical Roadway Pavement Replacement Detail".

10. If, within one (1) year after the date of District acceptance of the pavement replacement, any work covered under this Permit is found to be defective by the District, Permittee shall promptly, without cost to the District and in accordance with the District's written instructions, either correct such defective work, or, if it has been rejected by the District, remove it from the site and replace it with non-defective work. If Permittee does not completely comply with the terms of such instructions, or in an emergency where delay would cause serious risk of loss or damage, District may have the defective work corrected, or rejected work removed and replaced, and all direct and indirect costs of such removal, replacement, or correction, including compensation for additional professional services, shall be paid by the Permittee.

11. Permittee agrees not to cause or permit the Property to be used for the generation, handling, storage, transportation, disposal, or release of any Hazardous Materials, except as exempted or permitted under applicable Environmental Laws, and Permittee shall not cause or permit the property, or any activities conducted thereon, to be in violation of any applicable Environmental Laws. Permittee agrees to indemnify the District and hold the District and its directors, officers, employees, successors and assigns harmless from and against any and all claims, losses, damages, liabilities, fines, penalties, charges, interest, administrative or judicial proceedings and order, judgments, remedial action, requirements, enforcement

actions of any kind, and all costs and expenses incurred in connection therewith, directly or indirectly resulting in whole or in part from Permittee's violation of any Environmental Laws applicable to the Property, or any activity conducted thereon caused by Permittee or its employees, agents, licensees, invitees, guests or any other party under Permittee's control, or from any use, generation, handling, storage, transportation, disposal or release of Hazardous Materials or in connection with the Property caused by Permittee or its employees, agents, licensees, invitees, guests, or any other party under Permittee's control, or any contamination, detoxification, closure, cleanup or other remedial measure required under any Environmental Laws as a result thereof. All sums paid and costs incurred by the District with respect to the foregoing matters shall be payable by Permittee as additional permit fees hereunder.

12. All necessary provisions shall be taken to ensure compliance with the water quality standards of the State of Florida. Attention is called to Chapter 17-3, Florida Administrative Code, and in particular, the requirements that turbidity shall not exceed 29 Nephelometric Turbidity Units above background level. Adequate silt containment procedures and equipment shall be used to control turbidity at all times. Water samples to be taken upstream and downstream prior to construction and during construction daily and made available to the District at their request.

13. The Permittee shall be obligated throughout the term of this Permit to provide insurance coverage in accordance with the attached exhibit titled "Insurance Coverage".

B. UNDERGROUND UTILITIES

1. All underground utilities shall have a minimum cover of forty-two (42") inches below profile grade of District waterways and thirty (30") inches below profile grade of District roadways.

2. All utility installations shall maintain a minimum clearance of twelve (12") inches, either over or under culverts and shall be protected; however, other depths may be specified by the District Engineer.

3. The roadway right-of-way, in its entirety, shall be left in as good a condition as that which existed before construction. A mutual inspection shall be made of all existing facilities within the construction area no later than twenty-four (24) hours before the work begins.

4. All installations shall be constructed in a workmanlike manner:
   a. Trenches shall be refilled in a thoroughly compacted manner so that no future settling will occur.

b. The Permittee shall, at the request of the District Engineer or his duly authorized representative, submit copies of density reports of density determinations by an independent testing laboratory when paved roadway surfaces have been cut. If density reports are requested, they shall be furnished prior to final inspection.

c. The finished surface of the excavated area shall be replaced with the same type materials as existed when the work began, such as sod for sod, shell for shell, etc.

5. Where fill, slopes, shoulders and/or ditches are disturbed, they shall be stabilized as directed by the District Engineer or his duly authorized representative, in a manner that will afford protection against erosion.

6. All pavement crossings, if made subsequent to final placement of base material and pavement surface, shall be made by jacking, boring or augering, and shall contain an adequate casing if required by the District Engineer.

SPECIAL CONDITIONS

1. Permittee shall prevent on-site erosion and sediment from leaving the site during construction. At completion of construction, all non-paved areas shall be sodded.

2. All drainage pipe and installation thereof shall conform to the requirements of Florida DOT specifications, latest applicable sections to date.

3. The requirements for pipe backfill shall be as defined in Florida DOT specifications (AASHTO T-99 or T-180). Permittee shall provide adequate equipment for the removal of storm or subsurface waters which may accumulate in the excavated areas and provide protection against soil erosion.

4. Permittee shall forward all test results (except building tests) to the District Engineer.

5. Permittee shall comply with all conditions imposed by the District and/or other governing agencies, including but not limited to the following:

   a. Permittee shall utilize best management practices at each storm inlet in accordance with the final approved plans.

   b. Permittee shall construct stormwater treatment facilities in accordance with the existing South Florida Water Management District permit. A copy of such permit shall be provided to the District.

6. Permittee shall insure that quantity of stormwater discharged into the District's canal will not cause erosion of the canal bank. If such discharge does cause erosion, Permittee shall be responsible, at its sole cost and expense, to maintain and repair said canal bank.

7. If the works of the Permittee require the obtaining of an Environmental Protection Agency NPDES Permit, then the Permittee shall be required to obtain the appropriate NPDES Permit and provide a copy of the NPDES Permit and NPDES stormwater pollution prevention plan to both Palm Beach County and the District prior to commencement of the subject works.

8. The Permittee shall be required to: (a) implement a maintenance program for the permitted works, (b) carry out an annual inspection of the permitted works and (c) following inspection, have an inspection report prepared by a qualified professional. The Permittee shall be responsible for retaining a copy of said inspection report and providing a copy of same to the District by February 1st of each year.

9. If any of the works which are the subject of this Permit are conveyed, assigned, transferred, gifted to any third party, or are operated by a third party, then the Permittee shall be obligated to provide a copy of this Permit and its conditions to said successor, assign or

operating entity. Further, such successor, assign or operating entity shall be obligated to comply with all of the conditions of this Permit including, without limitation, implementation of the above mentioned maintenance program and the provision of the annual inspection report to the District.

10. If any act of negligence, omission, or commission by the Permittee or third party operator should adversely affect Palm Beach County's obligations under the County's NPDES Permit, then Permittee shall within forty-eight hours following receipt of written notice by the District of such act promptly cease and rectify same, otherwise this Permit shall be immediately suspended until such time as reinstated by the District in writing.

11. Permittee shall be solely responsible for ensuring that all stormwater discharge meets the applicable water quality standards. In the event that the discharge does not meet such standards, Permittee must disconnect the stormwater inlet and shall be prohibited from discharging into the District's canal.

12. If Permittee fails to abide by Palm Beach County's NPDES Permit, the applicable water quality standards, or any of the conditions set forth herein, and fails to remedy same within ten (10) business days from the date of receipt of such notice of violation by the District, then the District shall have the right but not the obligation to initiate such remedial activity as the District deems necessary and appropriate. Any and all costs so incurred by the District shall be paid by the Permittee to the District within ten business days following receipt of a District invoice for same and if not paid the District may thereafter revoke this Permit without further notice or hearing.

13. Provide Maintenance of Traffic (MOT) as required in accordance with the Florida Department of Transportation (FDOT) Index 600 Series.

14. Permittee shall notify the District at least two (2) weeks prior to all temporary traffic lane closures implemented as part of the MOT during construction.

15. All proposed poles, including replacement of existing poles, and hand holes shall be located outside of ITID's canal right-of-ways. The same shall apply in the extension of ITID canal right-of-ways through ITID road rights-of-way, for example, where a canal crosses or dead ends at a road.

EXHIBIT
INSURANCE COVERAGE

GENERAL

Indian Trail Improvement District shall be named as "Additional Named Insured" and certificate holder on both the general liability and auto liability policies.

Cancellation clause must read "should any of the above described policies be canceled before the expiration date thereof, the issuing company shall mail thirty (30) days written notice to the certificate holder name."

INSURANCE REQUIREMENTS

The limits of liability for the insurance required shall provide coverage for not less than the following amounts or greater when required by law and regulations:

Workers' Compensation:

1.	State:	Statutory
2.	Applicable Federal (e.g. Longshoreman's and Harbour Workers' Compensation, Maritime, Jones Act, etc.):	Statutory
3.	Employer's Liability:	$ 500,000

Comprehensive General Liability:

1. Bodily Injury (including completed operations and Products Liability):

$1,000,000	Each Occurrence
$1,000,000	Annual Aggregate

Property Damage:

$1,000,000	Each Occurrence
$1,000,000	Annual Aggregate
or a combined single limit of	$1,000,000

2. Property Damage liability insurance will provide Exposition, Collapse and Underground coverage where applicable.

3. Personal Injury, with employee exclusion deleted

$1,000,000	Annual Aggregate

Comprehensive Automobile Liability:

1. Bodily Injury:

$ 500,000	Each Person
$1,000,000	Each Occurrence

2. Property Damage:

$ 500,000	Each Occurrence
or a combined single limit of	$1,000,000

Umbrella Excess Liability Insurance:

1. $1,000,000 Each Occurrence
   $1,000,000 Annual Aggregate

2. The umbrella coverage shall be Following-Form being no more restrictive than coverage required for the underlying policies.

The comprehensive general liability insurance and umbrella insurance required herein shall include Owner and Engineer as additional insured.

Contractual Liability Insurance: The Contractual Liability Insurance required shall provide coverage for not less than the following amounts.

1. Bodily Injury: Each Occurrence
   $1,000,000

2. Property Damage:

$1,000,000	Each Occurrence
$1,000,000	Annual Aggregate

Builder's Risk: This coverage will be provided by all contractors involved in the construction of a new building or improvement, alteration or revision of an existing structure. Builder's Risk coverage shall be "All Risk" with limits equal to one hundred percent (100%) of the completed value of the structure(s), building(s) or addition(s).

WATER ONLY PLAN FOR:

Madison Associates Holdings LLC

13980 89th Pl N
West Palm Beach, FL 33412

LOCATION MAP
NOT TO SCALE

SECTION 21, TOWNSHIP 42 SOUTH, RANGE 41 EAST

PCN #: 00-41-42-21-00-000-3140
LEGAL DESCRIPTION:
21-42-41, N 239 FT OF S 4930 FT (LESS E 4988 FT) OF SEC A/K/A V-482

SHEET INDEX:

C-0	COVER PAGE
C-1	WATER PLAN
C-2	PAVING, GRADING AND DRAINAGE PLAN
W-1	POTABLE WATER #1 STANDARD DETAILS
W-2	POTABLE WATER #2 STANDARD DETAILS
W-3	POTABLE WATER #3 STANDARD DETAILS
W-4	POTABLE WATER #4 STANDARD DETAILS
W-5	POTABLE WATER #5 STANDARD DETAILS
W-6	POTABLE WATER #6 STANDARD DETAILS

WUD# 24-567

FLORIDA SOIL AND WATER

FLORIDA SOIL AND WATER
9984 MARSALA WAY
DELRAY BEACH, FL 33446

CONTACT:
(561) 212-1994
floridasoilandwater@gmail.com

COVER PAGE
Madison Associates Holdings LLC
13980 89th Pl N
West Palm Beach, FL 33412
Palm Beach County Water Utilities

JOSHUA S. LUSINA, P.E.
FLORIDA P.E. LICENSE NO. 93766

DESIGN PANEL

DATE:	5/19/2024
SCALE:	NA
DRAWN BY:	JL
CHECKED BY:	JL

REVISION PANEL

REV	DATE	DRN	DETAILS	APPROVED
0	5/19/2024	JL	FOR PERMIT	JL
1	8/13/2024	ML	Per 7/10 comments	JL
2	9/8/2024	JL	In person review 9/4/24	JL

DRAWING NAME: C-0 COVER SHEET

1 of 9

RECORD DRAWING NOTES:

1) RECORD DRAWINGS SHALL BE PREPARED IN THE STATE PLANE COORDINATE SYSTEM.

2) ALL UTILITY FEATURES SHALL BE SHOWN IN THEIR AS-BUILT LOCATION.

3) SATE PLANE COORDINATES SHALL BE DISPLAYED ON RECORD DRAWINGS FOR ALL FEATURES SPECIFIED IN P.B.C.W.U.D. STANDARDS.

4) STATE PLANE COORDINATES SHALL BE SHOWN ON PROPERTY CORNERS AS REQUIRED BY P.B.C.W.U.D.

GENERAL WATER NOTES:

1) ALL WATER MAIN DUCTILE IRON PIPE AND PIPE FITTINGS SHALL BE PAINTED WITH A 4" WIDE CONTINUOUS BLUE LINE THAT RUNS PARALLEL TO THE AXIS OF THE PIPE AND IS LOCATED ALONG THE TOP OF PIPE.

2) ALL WATER MAINS SHALL BE MARKED WITH ONE CONTINUOUS STRIP OF 6" WIDE MAGNETIC BLUE CODED TAPE IMPRINTED WITH ONE AND ONE-HALF (1.5") INCH HIGH LETTERING READING "CAUTION WATER LINE BURIED BELOW" AND LOCATED APPROXIMATELY TWELVE (12) INCHES ABOVE THE CROWN OF THE PIPE. THE WORDING SHALL OCCUR EVERY THREE (3) FEET.

3) ALL WATER SERVICE BRASS FITTINGS ARE REQUIRED TO BE LEAD FREE.

4) ALL EXISTING PBCWUD FACILITIES (IE. VALVES) TO BE OPERATED BY PBCWUD PERSONNEL ONLY.

5) 5' MIN. HORIZONTAL SEPARATION BETWEEN SERVICE LINE AND SEWER LATERAL.

6) TIER 15 TRAFFIC RATED METER BOX AND LID REQUIRED.

HYDRANT & HYDRANT SECURITY EQUIPMENT NOTES:

1) FIRE HYDRANT SHALL BE EQUIPPED WITH A SET OF AFC " CAPTIVATER" SECURITY CAPS. THE CAPS SHALL BE CHAINED TO THE HYDRANT BODY AND INSTALLED PRIOR TO ISSUANCE OF " CONSTRUCTION WATER RELEASE" CERTIFICATION. A SCHEDULED INSPECTION BY PBCWUD IS REQUIRED TO VERIFY THE INSTALLATION AND OPERATION OF THE CAPS.

2) PLEASE NOTE THAT THE SECURITY CAPS CAN ONLY BE REMOVED USING SPECIAL WRENCHES. THE CONTRACTOR SHALL CONTACT THE PBCWUD INSPECTOR FOR ASSISTANCE IF ACCESS TO THE HYDRANT IS REQUIRED FOR FLUSHING OR TESTING PURPOSES.

3) ALL NEW FIRE HYDRANTS ARE TO BE INSTALLED SO THE PUMPER NOZZLE IS 5.0' MIN WITH RAISED CURB OR 6'-0" MIN WITHOUT RAISED CURB AND 12.0' MAX. FROM THE EDGE OF PAVEMENT.

4) EXISTING FIRE HYDRANT CAN BE RELOCATED IF IN OPERATABLE CONDTION AT THE DISCRETION OF THE WUD INSPECTOR.

GENERAL LANDSCAPE NOTE:

IF ANY NEW LANDSCAPE MATERIALS ARE INSTALLED AS PART OF THIS PROJECT THEN SOD ONLY WITH NO SHRUBS AND/OR TREES ARE TO BE INSTALLED WITHIN 5' OF ANY WATER METER AND WITHIN 7.5' OF ANY FIRE HYDRANT. TREES CANNOT BE INSTALLED WITHIN 10' OF A WUD WATER OR FORCE MAIN WITHOUT PRIOR PBCWUD APPROVAL AND THE INSTALLATION OF A ROOT BARRIER. ALSO IF ANY EXISTING TREES ARE LESS THAN 10' MINIMUM OF ANY NEW WATER OR FORCE MAIN A ROOT BARRIER IS REQUIRED TO BE INSTALLED OR TREE RELOCATED/REMOVED.

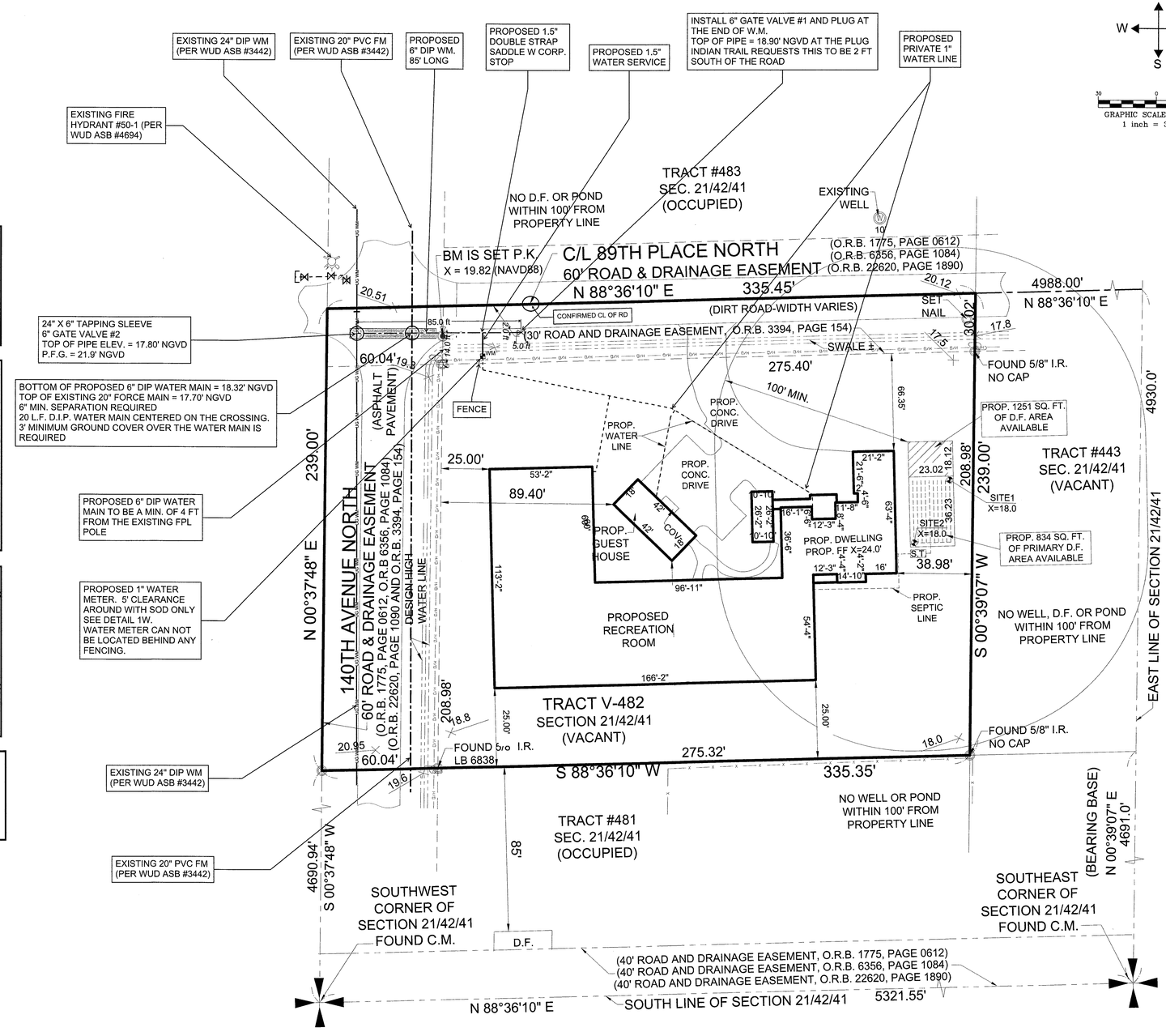

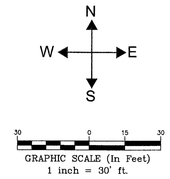

LOCATION MAP
NOT TO SCALE

SECTION 21, TOWNSHIP 42 SOUTH, RANGE 41 EAST

PCN #: 00-41-42-21-00-000-3140
LEGAL DESCRIPTION:
21-42-41, N 239 FT OF S 4930 FT
(LESS E 4988 FT) OF SEC A/K/A V-482

Sunshine 811

LEGEND	
EXISTING 24" WATER MAIN	UG WM UG WM
EXISTING 20" FORCE MAIN	
EXISTING 6" WATER MAIN	
PROPOSED 6" DIP WATER LINE	
PROPOSED 5/8" WATER LINE	

WATER PLAN

CONTRACTOR TO FIELD VERIFY THE LOCATION, SIZE, MATERIAL AND DEPTH OF ALL EXISTING MAINS PRIOR TO CONSTRUCITON.

**EXISTING UTILITY LOCATIONS OBTAINED FROM RECORD DRAWINGS AND/OR PROVIDED BY DEVELOPMENT ENGINEER. ALL FACILITIES SUBJECT TO FIELD VERIFICATION OF THE LOCATION OF EXISTING UTILITIES AND MAINTAIN MINIMUM DESIGN SEPARATION AT ALL TIMES. IF ANY UTILITY RELOCATIONS ARE REQUIRED, PLAN SUBMITTAL TO PBCWUD IS REQUIRED.

PBCUE RECORDED IN ORB___, PG

WUD# 24-567

Plan Background from TRIANGLE LAND SURVEYING INC. Print date: 8/9/2023

FLORIDA SOIL AND WATER

FLORIDA SOIL AND WATER
9984 MARSALA WAY
DELRAY BEACH, FL 33446

CONTACT:
(561) 212-1994
floridasoilandwater@gmail.com

WATER ONLY PLAN
Madison Associates Holdings LLC
13980 89th Pl N
West Palm Beach, FL 33412
Palm Beach County Water Utilities

JOSHUA N. LISMAN, P.E.
FLORIDA P.E. LICENSE NO. 76700

DESIGN PANEL

DATE:	5/19/2024
SCALE:	1" = 30'-0"
DRAWN BY:	JL
CHECKED BY:	JL

REVISION PANEL

REV	DATE	DRN	DETAILS	APPROVED
0	5/19/2024	JL	FOR PERMIT	JL
1	8/13/2024	ML	Per 7/10 comments	JL
2	9/8/2024	JL	In person review 9/4/24	JL
3	9/30/2024	ML	Per 9/30 comments	JL
4	10/1/2024	JL	ITID Request move line	JL
5	10/21/2024	JL	Relocate Water Meter	JL

DRAWING NAME: C-1 WATER PLAN

2 of 9

LOCATION MAP
NOT TO SCALE

Sunshine811

GRAPHIC SCALE
(IN FEET)
1 inch = 20 ft.

PAVING, GRADING, AND DRAINAGE PLAN

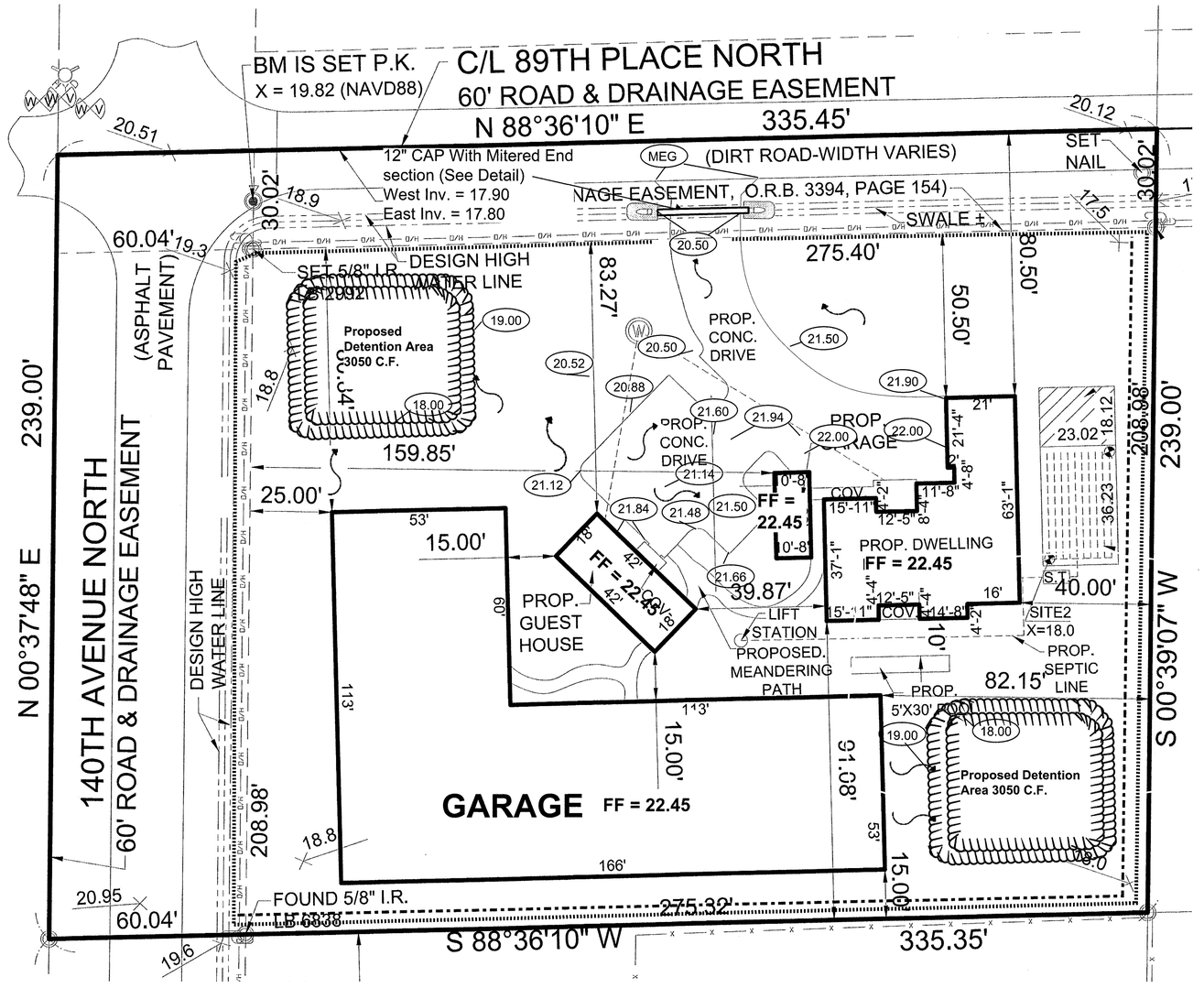

GENERAL NOTES

1. REGULATIONS - ALL CONSTRUCTION SHALL CONFORM TO THE STANDARDS AND SPECIFICATIONS SET FORTH BY THE MUNICIPALITY IN WHICH THE WORK IS BEING PERFORMED.
2. ELEVATIONS SHOWN HEREON ARE BASED ON NORTH AMERICAN VERTICAL DATUM OF 1988 (NAVD'88).
3. SITE INFORMATION CONTAINED HEREIN HAS BEEN BASED ON THE CONSTRUCTION LAYOUT SURVEY PROVIDED BY TRIANGLE LAND SURVEYING, INC. (JOB NO: 24731).
4. PRIOR TO CONSTRUCTION THE CONTRACTOR IS TO FIELD LOCATE AND SAFEGUARD ALL EXISTING UTILITIES, STRUCTURES, AND SURVEY MARKERS.
5. THE CONTRACTOR SHALL OBTAIN ALL PERMITS NECESSARY TO START CONSTRUCTION.
6. ALL SIDEWALKS, PATIOS, DRIVEWAYS, DIRT, ETC. SHALL BE SLOPED AWAY FROM HABITABLE STRUCTURES.
7. MAXIMUM GRASS SLOPE SHALL NOT EXCEED 4: 1.
8. CONTRACTOR TO COORDINATE GRADING PLAN WITH LANDSCAPE ARCHITECT.
9. IF CONDITIONS REQUIRE WORK NOT SHOWN OR NOT VISIBLE ON PLANS, CONTRACTOR IS TO CONTACT ENGINEER PRIOR TO CONTINUING.
10. SITE GRADING IS TO BE PERFORMED IN A MANNER SO THAT STORM RUNOFF DOES NOT IMPACT ADJACENT PROPERTIES NEGATIVELY.
11. PROPOSED ELEVATIONS AS PRESENTED HEREIN THAT ARE LOCATED IN PERVIOUS AREAS, REPRESENT FINISHED, TOP OF SOD/GRASS, MULCH, LOOSE ROCK OR ANY OTHER LANDSCAPE MATERIAL CHOSEN.
12. CONTRACTOR TO VERIFY ALL EXISTING DIMENSIONS, ELEVATIONS, AND CONDITIONS PRIOR TO BEGINNING CONSTRUCTION.

PPM# PB-0-128 LOT GRADING/DRAINAGE CALCULATIONS
13980 89th PLACE NORTH
WEST PALM BEACH FLORIDA, 33412

LOT SIZE (SQ.FT.) =		80,109		
LESS ROAD & DRAINAGE EASEMENT (SQ.FT.) =	22,904	57,505		
PROPOSED BUILDINGS (SQ.FT.) =	16,640			
PAVED AREAS (SQ.FT.) =	5,895			
3 YR. -24 HR. RAINFALL (in.) =	6			
ASSUME 4' DEPTH TO WATER TABLE:				
IMPERVIOUS AREA (SQ.FT.) =		21,535		
PERVIOUS AREA (SQ.FT.) =		35,970		
AVAILABLE SOIL STORAGE = SOIL STORAGE AVAILABLE WITH NO COMPACTION X % PERVIOUS AREA				
ASSUME PINE FLATWOODS WHERE S = 9.0"			S =	5.63
SCS RUNOFF FORMULA: Q = $(P-0.2S)^2$ WHERE Q = RUNOFF RATE IN INCHES AND S = SOIL STORAGE IN INCHES P + 0.8S AND P = RAINFALL AMOUNT IN INCHES				
DEVELOPED RUNOFF RATE: Q (in.) =			Q =	2.26
RUNOFF VOLUME = RUNOFF RATE X SITE AREA (C.F.) =				10838
ASSUME 1.0" PER DAY DISCHARGE = 27 CSM/640 = 0.42 CFS/ACRE				
TOTAL REQUIRED STORAGE (C.F.) = RUNOFF VOLUME – DISCHARGE VOLUME =				6046
DRY DETENTION VOLUME PROVIDED (C.F.) WITHIN ON-SITE DETENTION AREAS =			6100 >	6046

Legend

- x16.56 — Existing Elevation NAVD 1988
- 19.20 — Proposed Elevation NAVD 1988
- Temporary Silt Fence
- MEG — Match Existing Grade
- Direction of Flow
- Flow Line of Property Boundary Swale

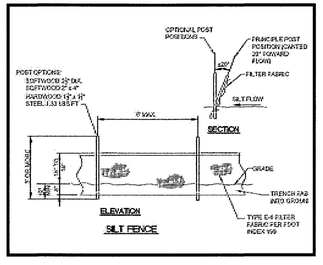

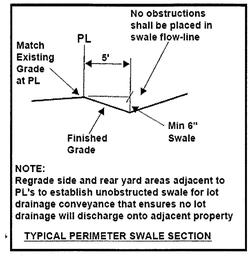

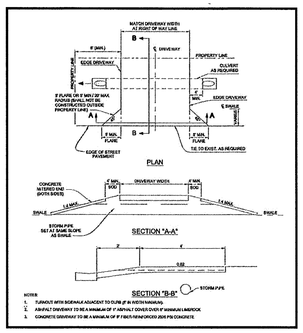

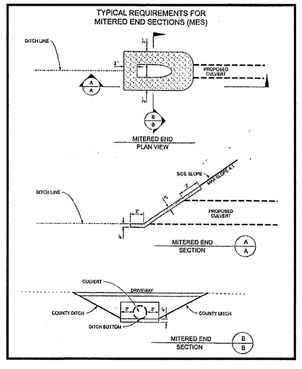

WUD# 24-567

FLORIDA SOIL AND WATER

FLORIDA SOIL AND WATER
9984 MARSALA WAY
DELRAY BEACH, FL 33446

CONTACT:
(561) 212-1994
floridasoilandwater@gmail.com

PAVING, GRADING, AND DRAINAGE PLAN
Madison Associates Holdings LLC
13980 89th Pl N
West Palm Beach
Palm Beach County Water Utilities

ADRIAN N. LEDMAN, P.E.
FLORIDA P.E. LICENSE NO. 93198

DESIGN PANEL

DATE:	5/19/2024
SCALE:	1" = 20'-0"
DRAWN BY:	JL
CHECKED BY:	JL

REVISION PANEL

REV	DATE	DRN	DETAILS	APPROVED
0	5/19/2024	JL	FOR PERMIT	JL

DRAWING NAME: C-2
PAVING, GRADING AND DRAINAGE PLAN

3 of 9

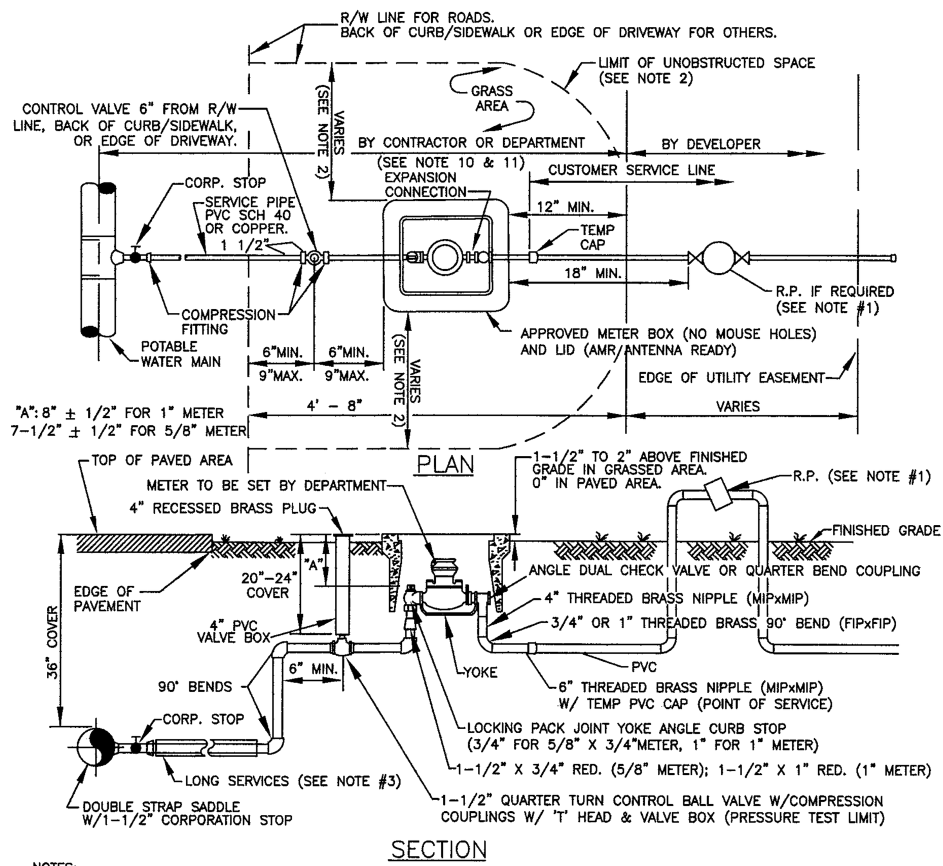

NOTES:

1. ALL NON-RESIDENTIAL SERVICES AND RESIDENTIAL SERVICES WITH SEPARATE METERED RECLAIMED WATER SERVICE SHALL HAVE AN APPROVED REDUCED PRESSURE PRINCIPLE BACKFLOW PREVENTION ASSEMBLY (R.P.). THE INITIAL TEST OF THE R.P. SHALL BE PERFORMED BY THE DEPARTMENT. THE R.P. SHALL BE INSTALLED AS CLOSE AS POSSIBLE TO THE POINT OF SERVICE NOT TO EXCEED 48" WITHOUT PRIOR DEPARTMENT APPROVAL. THE R.P. DEVICE SHALL BE USC APPROVED PER FAC 62-555.360.*
2. METER BOX SHALL BE LOCATED 12" MINIMUM FROM EDGE OF SIDEWALK, BACK OF CURB, OR EDGE OF DRIVEWAY WITH SOD ONLY WITHIN 5' MINIMUM AND NO TREES WITHIN 10' MINIMUM. IF METER BOX IS 18" OR LESS FROM A DRIVEWAY, THE BOX AND LID MUST BE RATED TIER 15.*
3. FOR INSTALLATION OF SERVICES UNDER DRIVEWAYS AND ROADWAYS USE MIN. 3" DIAMETER BLACK IRON, PVC SCH 40 OR HDPE SDR 9 CASING. CASING SHALL EXTEND MIN. 24" BEYOND EDGE OF PAVEMENT. END OF CASING TO BE SEALED WITH FOAM SEALANT. CASING SHALL BE COLOR-CODED BLACK, WHITE, BLUE, OR BLUE STRIPED.
4. SUCCESSIVE TAPS INTO THE WATER MAIN SHALL BE SPACED A MINIMUM OF 18" APART. TAPS ON SAME SIDE OF A PVC PIPE SECTION SHALL BE MIN. 10' APART
5. METER SHALL NOT BE PLACED IN SIDEWALK OR DRIVEWAY AREAS. WATER SERVICE LINES AND TAPS SHALL NOT BE PLACED UNDER DRIVEWAYS WHENEVER POSSIBLE AND IF REQUIRED, ONLY WITH PRIOR DEPARTMENT APPROVAL.
6. PVC PIPE SHALL BE SCH. 40. WITH SCH 80 PVC FITTINGS. ALL BRASS SHALL BE "LEAD FREE".*
7. MAXIMUM SERVICE LENGTH IS 100' TO METER.
8. BEDDING (MIN. 4") AND COVER (MIN. 4") OVER SERVICE LINE OR CASING SHALL CONSIST OF FINE GRANULAR MATERIAL. UNSUITABLE IN-SITU MATERIALS SUCH AS MUCK, DEBRIS AND LARGER ROCKS SHALL BE REMOVED WITH 2" MAXIMUM SIZE.
9. METER/SERVICE WILL NOT BE INSTALLED/ACTIVATED UNTIL:
   A. ALL FORM BOARDS FOR DRIVEWAY AND/OR SIDEWALK MUST BE COMPLETELY INSTALLED OR THE DRIVEWAY AND/OR SIDEWALK MUST HAVE BEEN INSTALLED.
   B. "MINIMUM UNOBSTRUCTED SPACE" AS SHOWN IN NOTE 2 AND ON THE PLAN VIEW IS PROVIDED WITH 12" MINIMUM VERTICAL SEPARATION REQUIRED TO ALL OTHER UTILITIES.
   C. THE REQUIRED BACKFLOW PREVENTION ASSEMBLY/DEVICE IS INSTALLED AND HAS PASSED INITIAL TEST.
10. METER TO BE INSTALLED BY DEPARTMENT. THE PIPING BEYOND THE CONTROL VALVE SHALL BE INSTALLED BY THE DEVELOPER OR THE DEPARTMENT DEPENDING ON TYPE OF SERVICE INSTALLATION REQUIRED.
11. THE DEVELOPER/PROPERTY OWNER OR ASSIGNEE SHALL BE RESPONSIBLE FOR INSTALLATION OF SERVICES BEYOND PRESSURE TEST LIMITS AS SPECIFIED BY THE DEPARTMENT.
12. THREADED AREAS OF CORPORATION STOP AND OTHER FITTINGS SHALL BE SPIRAL WRAPPED WITH TWO (2) WRAPS OF TEFLON TAPE.
13. METER BOXES IN NON-GRASS AREAS SHALL HAVE TRAFFIC RATED LIDS.
14. A 12" THICK COMPACTED 3/4" ROCK BASE IS REQUIRED FOR METER BOXES OUTSIDE OF GRASS AREA. THE BASE SHALL EXTEND MINIMUM 12" BEYOND THE METER BOX PERIMETER.

POTABLE WATER SERVICE SINGLE 5/8" X 3/4" & 1" METER INSTALLATION DETAIL (PVC) *

1W

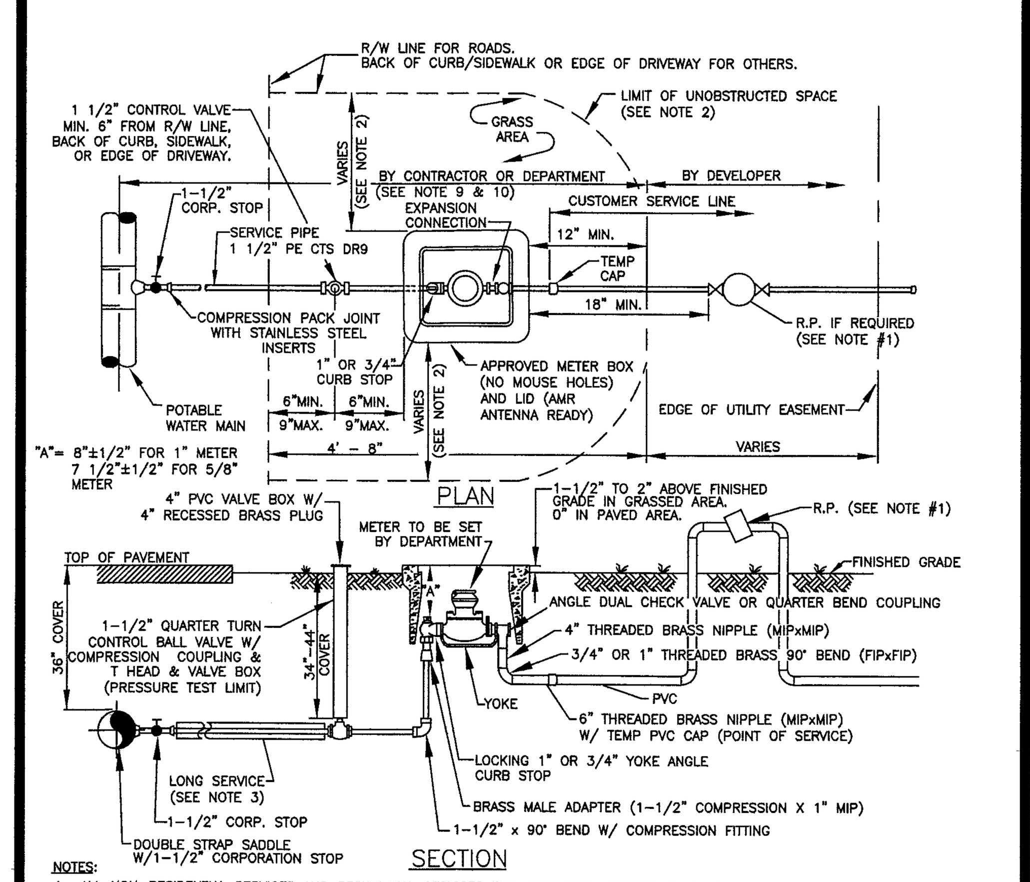

NOTES:

1. ALL NON-RESIDENTIAL SERVICES AND RESIDENTIAL SERVICES WITH SEPARATE METERED RECLAIMED WATER SERVICE SHALL HAVE AN APPROVED REDUCED PRESSURE PRINCIPLE BACKFLOW PREVENTION ASSEMBLY (R.P.). THE INITIAL TEST OF THE R.P. SHALL BE PERFORMED BY THE DEPARTMENT. THE R.P. SHALL BE INSTALLED AS CLOSE AS POSSIBLE TO THE POINT OF SERVICE NOT TO EXCEED 48" WITHOUT PRIOR DEPARTMENT APPROVAL. THE R.P. DEVICE SHALL BE USC APPROVED PER FAC 62-555.360.*
2. METER BOX SHALL BE LOCATED 12" MINIMUM FROM EDGE OF SIDEWALK, BACK OF CURB, OR EDGE OF DRIVEWAY WITH SOD ONLY WITHIN 5' MINIMUM AND NO TREES WITHIN 10' MINIMUM. IF METER BOX IS 18" OR LESS FROM A DRIVEWAY, THE BOX AND LID MUST BE RATED TIER 15.*
3. FOR INSTALLATION OF SERVICES UNDER DRIVEWAYS AND ROADWAYS USE MIN. 3" DIAMETER BLACK IRON, PVC SCH 40 OR HDPE SDR 9 CASING. CASING SHALL EXTEND MIN. 24" BEYOND EDGE OF PAVEMENT. END OF CASING TO BE SEALED WITH FOAM SEALANT. CASING SHALL BE COLOR-CODED BLACK, WHITE, BLUE, OR BLUE STRIPED.
4. SUCCESSIVE TAPS INTO THE WATER MAIN SHALL BE SPACED A MINIMUM OF 18" APART. TAPS ON SAME SIDE OF A PVC PIPE SECTION SHALL BE MIN. 10' APART
5. METER SHALL NOT BE PLACED IN SIDEWALK OR DRIVEWAY AREAS. WATER SERVICE LINES AND TAPS SHALL NOT BE PLACED UNDER DRIVEWAYS WHENEVER POSSIBLE AND IF REQUIRED, ONLY WITH PRIOR DEPARTMENT APPROVAL.
6. MAXIMUM SERVICE LENGTH IS 100' TO METER.
7. BEDDING (MIN. 4") AND COVER (MIN. 4") OVER SERVICE LINE OR CASING SHALL CONSIST OF FINE GRANULAR MATERIAL. UNSUITABLE IN-SITU MATERIALS SUCH AS MUCK, DEBRIS AND LARGER ROCKS SHALL BE REMOVED WITH 2" MAXIMUM SIZE.
8. METER/SERVICE WILL NOT BE INSTALLED/ACTIVATED UNTIL:
   A. ALL FORM BOARDS FOR DRIVEWAY AND/OR SIDEWALK MUST BE COMPLETELY INSTALLED OR THE DRIVEWAY AND/OR SIDEWALK MUST HAVE BEEN INSTALLED.
   B. "MINIMUM UNOBSTRUCTED SPACE" AS SHOWN IN NOTE 2 AND ON THE PLAN VIEW IS PROVIDED WITH 12" MINIMUM VERTICAL SEPARATION REQUIRED TO ALL OTHER UTILITIES.
   C. THE REQUIRED BACKFLOW PREVENTION ASSEMBLY/DEVICE IS INSTALLED AND HAS PASSED INITIAL TEST.
9. METER TO BE INSTALLED BY DEPARTMENT. THE PIPING BEYOND THE CONTROL VALVE TO BE INSTALLED BY THE DEVELOPER OR THE DEPARTMENT DEPENDING ON THE TYPE OF SERVICE INSTALLATION REQUIRED.
10. THE DEVELOPER/PROPERTY OWNER OR ASSIGNEE SHALL BE RESPONSIBLE FOR INSTALLATION OF SERVICES BEYOND PRESSURE TEST LIMITS AS SPECIFIED BY THE DEPARTMENT.
11. THREADED AREAS OF CORPORATION STOP AND OTHER FITTINGS SHALL BE SPIRAL WRAPPED WITH TWO (2) WRAPS OF TEFLON TAPE.
12. METER BOXES IN NON-GRASS AREAS SHALL HAVE TRAFFIC RATED LIDS.
13. A 12" THICK COMPACTED 3/4" ROCK BASE IS REQUIRED FOR METER BOXES OUTSIDE OF GRASS AREA. THE BASE SHALL EXTEND MIN. 12" BEYOND THE METER BOX PERIMETER.
14. STAINLESS STEEL INSERTS ARE REQUIRED FOR ALL COMPRESSION FITTINGS.
15. PVC SHALL BE SCHEDULE 40 PIPE WITH SCHEDULE 80 FITTINGS. ALL BRASS FITTINGS SHALL BE "LEAD FREE".

POTABLE WATER SERVICE SINGLE 5/8" X 3/4" & 1" METER INSTALLATION DETAIL (POLYETHYLENE) *

2W

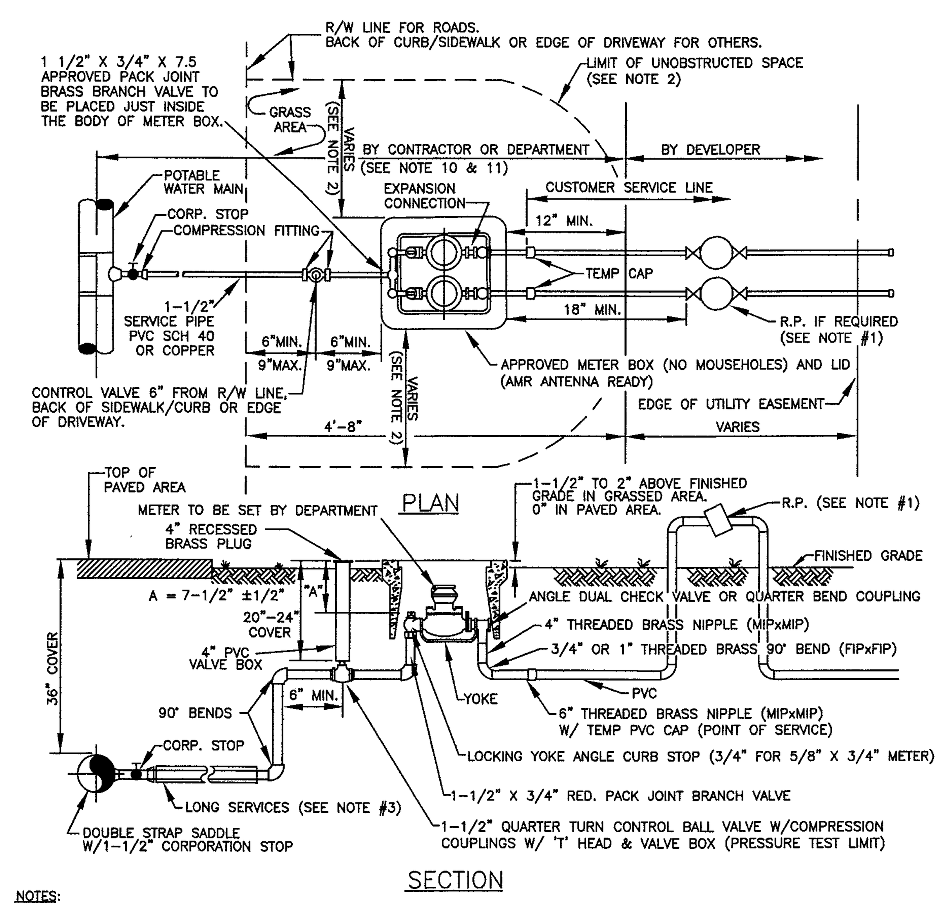

NOTES:

1. ALL NON-RESIDENTIAL SERVICES AND RESIDENTIAL SERVICES WITH SEPARATE METERED RECLAIMED WATER SERVICE SHALL HAVE AN APPROVED REDUCED PRESSURE PRINCIPLE BACKFLOW PREVENTION ASSEMBLY (R.P.). THE INITIAL TEST OF THE R.P. SHALL BE PERFORMED BY THE DEPARTMENT. THE R.P. SHALL BE INSTALLED AS CLOSE AS POSSIBLE TO THE POINT OF SERVICE NOT TO EXCEED 48" WITHOUT PRIOR DEPARTMENT APPROVAL. THE R.P. DEVICE SHALL BE USC APPROVED PER FAC 62-555.360.*
2. METER BOX SHALL BE LOCATED 12" MINIMUM FROM EDGE OF SIDEWALK, BACK OF CURB, OR EDGE OF DRIVEWAY WITH SOD ONLY WITHIN 5' MINIMUM AND NO TREES WITHIN 10' MINIMUM. IF METER BOX IS 18" OR LESS FROM A FRIVESY, THE BOX AND LID MUST BE RATED TIER 15.*
3. FOR INSTALLATION OF SERVICES UNDER DRIVEWAYS AND ROADWAYS USE MIN. 3" DIAMETER BLACK IRON, PVC SCH 40 OR HDPE SDR 9 CASING. CASING SHALL EXTEND MIN. 24" BEYOND EDGE OF PAVEMENT. END OF CASING TO BE SEALED WITH FOAM SEALANT. CASING SHALL BE COLOR-CODED BLACK, WHITE, BLUE, OR BLUE STRIPED.
4. SUCCESSIVE TAPS INTO THE WATER MAIN SHALL BE SPACED A MINIMUM OF 18" APART. TAPS ON SAME SIDE OF A PVC PIPE SECTION SHALL BE MIN. 10' APART
5. METER SHALL NOT BE PLACED IN SIDEWALK OR DRIVEWAY AREAS. WATER SERVICE LINES AND TAPS SHALL NOT BE PLACED UNDER DRIVEWAYS WHENEVER POSSIBLE AND IF REQUIRED, ONLY WITH PRIOR DEPARTMENT APPROVAL.*
6. PVC PIPE SHALL BE SCH. 40. WITH SCH. 80 PVC FITTINGS. ALL BRASS SHALL BE "LEAD FREE".
7. MAXIMUM SERVICE LENGTH IS 100' TO METER.
8. BEDDING (MIN. 4") AND COVER (MIN. 4") OVER SERVICE LINE OR CASING SHALL CONSIST OF FINE GRANULAR MATERIAL. UNSUITABLE IN-SITU MATERIALS SUCH AS MUCK, DEBRIS AND LARGER ROCKS SHALL BE REMOVED WITH 2" MAXIMUM SIZE.
9. METER/SERVICE WILL NOT BE INSTALLED/ACTIVATED UNTIL:
   A. ALL FORM BOARDS FOR DRIVEWAY AND/OR SIDEWALK MUST BE COMPLETELY INSTALLED OR THE DRIVEWAY AND/OR SIDEWALK MUST HAVE BEEN INSTALLED.
   B. "MINIMUM UNOBSTRUCTED SPACE" AS SHOWN IN NOTE 2 AND ON THE PLAN VIEW IS PROVIDED WITH 12" MINIMUM VERTICAL SEPARATION REQUIRED TO ALL OTHER UTILITIES.
   C. THE REQUIRED BACKFLOW PREVENTION ASSEMBLY/DEVICE IS INSTALLED AND HAS PASSED INITIAL TEST.
10. METER TO BE INSTALLED BY DEPARTMENT. THE PIPING BEYOND THE CONTROL VALVE SHALL BE INSTALLED BY THE DEVELOPER OR THE DEPARTMENT DEPENDING ON TYPE OF SERVICE INSTALLATION REQUIRED.
11. THE DEVELOPER/PROPERTY OWNER OR ASSIGNEE SHALL BE RESPONSIBLE FOR INSTALLATION OF SERVICES BEYOND PRESSURE TEST LIMITS AS SPECIFIED BY THE DEPARTMENT.
12. THREADED AREAS OF CORPORATION STOP AND OTHER FITTINGS SHALL BE SPIRAL WRAPPED WITH TWO (2) WRAPS OF TEFLON TAPE.
13. METER BOXES IN NON-GRASS AREAS SHALL HAVE TRAFFIC RATED LIDS.
14. A 12" THICK COMPACTED 3/4" ROCK BASE IS REQUIRED FOR METER BOXES OUTSIDE OF GRASS AREA. THE BASE SHALL EXTEND MINIMUM 12" BEYOND THE METER BOX PERIMETER.

POTABLE WATER SERVICE DUAL 5/8" X 3/4" METER INSTALLATION DETAIL (PVC) *

3W

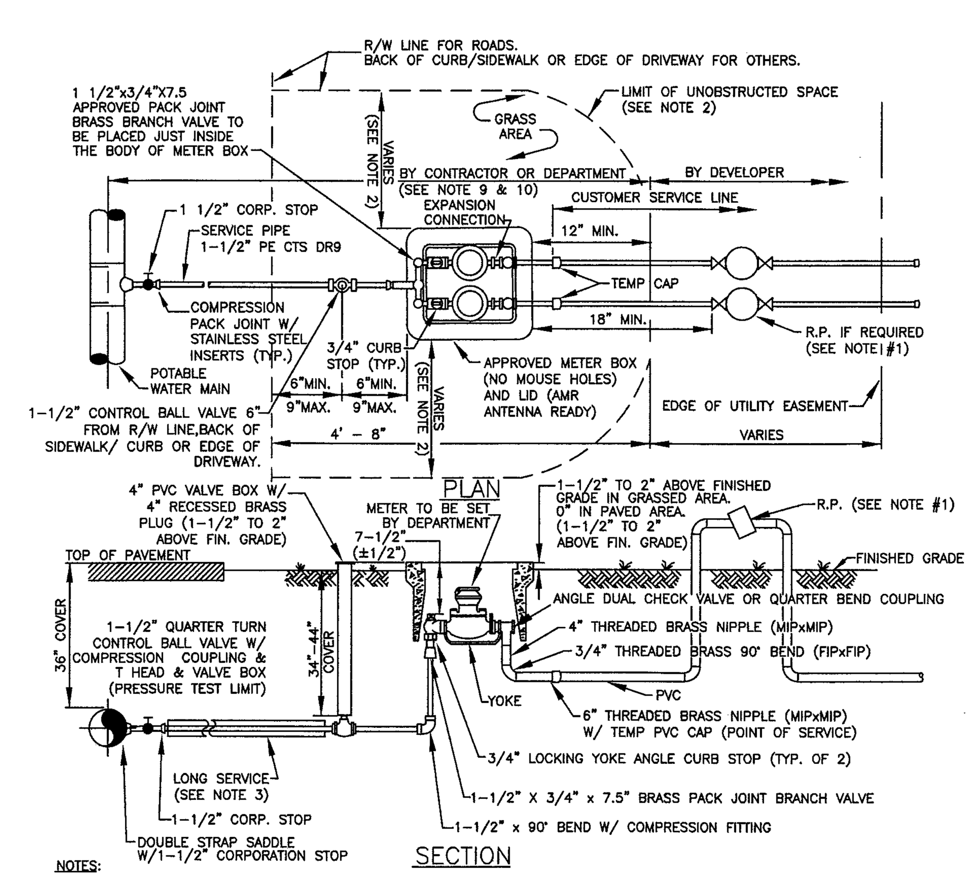

NOTES:

1. ALL NON-RESIDENTIAL SERVICES AND RESIDENTIAL SERVICES WITH SEPARATE METERED RECLAIMED WATER SERVICE SHALL HAVE AN APPROVED REDUCED PRESSURE PRINCIPLE BACKFLOW PREVENTION ASSEMBLY (R.P.). THE INITIAL TEST OF THE R.P. SHALL BE PERFORMED BY THE DEPARTMENT. THE R.P. SHALL BE INSTALLED AS CLOSE AS POSSIBLE TO THE POINT OF SERVICE NOT TO EXCEED 48" WITHOUT PRIOR DEPARTMENT APPROVAL. THE R.P. DEVICE SHALL BE USC APPROVED PER FAC 62-555.360.*
2. METER BOX SHALL BE LOCATED 12" MINIMUM FROM EDGE OF SIDEWALK, BACK OF CURB, OR EDGE OF DRIVEWAY WITH SOD ONLY WITHIN 5' MINIMUM AND NO TREES WITHIN 10' MINIMUM. IF METER BOX IS 18" OR LESS FROM A DRIVEWAY, THE BOX AND LID MUST BE RATED TIER 15.*
3. FOR INSTALLATION OF SERVICES UNDER DRIVEWAYS AND ROADWAYS USE MIN. 3" DIAMETER BLACK IRON, PVC SCH 40 OR HDPE SDR 9 CASING. CASING SHALL EXTEND MIN. 24" BEYOND EDGE OF PAVEMENT. END OF CASING TO BE SEALED WITH FOAM SEALANT. CASING SHALL BE COLOR-CODED BLACK, WHITE, BLUE, OR BLUE STRIPED.
4. SUCCESSIVE TAPS INTO THE WATER MAIN SHALL BE SPACED A MINIMUM OF 18" APART. TAPS ON SAME SIDE OF A PVC PIPE SECTION SHALL BE MIN. 10' APART
5. METER SHALL NOT BE PLACED IN SIDEWALK OR DRIVEWAY AREAS. WATER SERVICE LINES AND TAPS SHALL NOT BE PLACED UNDER DRIVEWAYS WHENEVER POSSIBLE AND IF REQUIRED, ONLY WITH PRIOR DEPARTMENT APPROVAL.
6. MAXIMUM SERVICE LENGTH IS 100' TO METER.
7. BEDDING (MIN. 4") AND COVER (MIN. 4") OVER SERVICE LINE OR CASING SHALL CONSIST OF FINE GRANULAR MATERIAL. UNSUITABLE IN-SITU MATERIALS SUCH AS MUCK, DEBRIS AND LARGER ROCKS SHALL BE REMOVED WITH 2" MAXIMUM SIZE.
8. METER/SERVICE WILL NOT BE INSTALLED/ACTIVATED UNTIL:
   A. ALL FORM BOARDS FOR DRIVEWAY AND/OR SIDEWALK MUST BE COMPLETELY INSTALLED OR THE DRIVEWAY AND/OR SIDEWALK MUST HAVE BEEN INSTALLED.
   B. "MINIMUM UNOBSTRUCTED SPACE" AS SHOWN IN NOTE 2 AND ON THE PLAN VIEW IS PROVIDED WITH 12" MINIMUM VERTICAL SEPARATION REQUIRED TO ALL OTHER UTILITIES.
   C. THE REQUIRED BACKFLOW PREVENTION ASSEMBLY/DEVICE IS INSTALLED AND HAS PASSED INITIAL TEST.
9. METER TO BE INSTALLED BY DEPARTMENT. THE PIPING BEYOND THE CONTROL VALVE TO BE INSTALLED BY THE DEVELOPER OR THE DEPARTMENT DEPENDING ON THE TYPE OF SERVICE INSTALLATION REQUIRED.
10. THE DEVELOPER/PROPERTY OWNER OR ASSIGNEE SHALL BE RESPONSIBLE FOR INSTALLATION OF SERVICES BEYOND PRESSURE TEST LIMITS AS SPECIFIED BY THE DEPARTMENT.
11. THREADED AREAS OF CORPORATION STOP AND OTHER FITTINGS SHALL BE SPIRAL WRAPPED WITH TWO (2) WRAPS OF TEFLON TAPE.
12. METER BOXES IN NON-GRASS AREAS SHALL HAVE TRAFFIC RATED LIDS.
13. A 12" THICK COMPACTED 3/4" ROCK BASE IS REQUIRED FOR METER BOXES OUTSIDE OF GRASS AREA. THE BASE SHALL EXTEND MIN. 12" BEYOND THE METER BOX PERIMETER.
14. STAINLESS STEEL INSERTS ARE REQUIRED FOR ALL COMPRESSION FITTINGS.
15. PVC SHALL BE SCHEDULE 40 PIPE WITH SCHEDULE 80 FITTINGS. ALL BRASS FITTINGS SHALL BE "LEAD FREE".

POTABLE WATER SERVICE DUAL 5/8" X 3/4" METER INSTALLATION DETAIL (POLYETHYLENE) *

4W

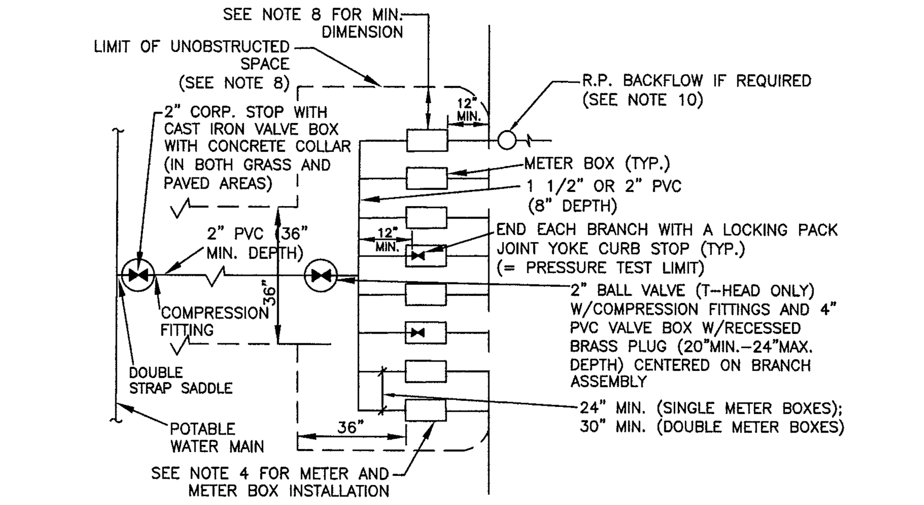

1. SERVICE PIPING LARGER THAN 2" WILL NOT BE ACCEPTED. FOR INSTALLATION OF SERVICES UNDER DRIVEWAYS AND ROADWAYS USE 4" DIAMETER BLACK IRON, PVC SCH. 40, OR HDPE SDR 9 CASING. CASING SHALL EXTEND 24" BEYOND EDGE OF PAVEMENT. END OF CASING TO BE SEALED WITH FOAM SEALANT. CASING SHALL BE COLOR CODED BLACK, WHITE, BULE, OR BLUE STRIPED.
2. METER LOCATION MUST CORRESPOND TO UNIT/BAY CONFIGURATION TO AVOID SERVICE LINE CROSSINGS.
3. METER/SERVICE WILL NOT BE INSTALLED/ACTIVATED UNTIL:
   A. ALL FORM BOARDS FOR DRIVEWAY AND/OR SIDEWALK MUST BE COMPLETELY INSTALLED OR THE DRIVEWAY AND/OR SIDEWALK MUST HAVE BEEN INSTALLED.
   B. "MINIMUM UNOBSTRUCTED SPACE" AS SHOWN IN NOTE 2 AND ON THE PLAN VIEW IS PROVIDED WITH 12" MINIMUM VERTICAL SEPARATION REQUIRED TO ALL OTHER UTILITIES.
   C. THE REQUIRED BACKFLOW PREVENTION ASSEMBLY/DEVICE IS INSTALLED AND HAS PASSED INITIAL TEST.
4. TYPICAL METER INSTALLATION DETAILS 1W AND 4W AS APPLICABLE.
5. THE DEVELOPER/PROPERTY OWNER OR ASSIGNEE SHALL BE RESPONSIBLE FOR SERVICE INSTALLATION BEYOND PRESSURE TEST LIMITS AS SPECIFIED BY THE DEPARTMENT.
6. THREADED AREAS OF CORPORATION STOP AND OTHER FITTINGS SHALL BE SPIRAL WRAPPED WITH TWO (2) WRAPS OF TEFLON TAPE.
7. MAX. (8) 5/8" METERS OR MAX. (4) 1" METERS, OR MAX. (2) 5/8" METERS WITH (2) 1" METERS MAY BE CONNECTED TO A SINGLE 2" SERVICE LINE.
8. LIMIT OF UNOBSTRUCTED SPACE FROM SIDE OF WATER METER BOX SHALL BE 5' MINIMUM FOR SHRUBS AND SIMILAR OBSTRUCTIONS WITH 10' MINIMUM FOR TREES, WALLS, AND OTHER SIMILAR OBSTRUCTIONS.*
9. PVC PIPE SHALL BE SCHEDULE 40 PIPE WITH SCHEDULE 80 FITTINGS. ALL BRASS FITTINGS SHALL BE "LEAD FREE".
10. ALL NON-RESIDENTIAL SERVICES AND RESIDENTIAL SERVICES WITH SEPARATE METERED RECLAIMED WATER SERVICE SHALL HAVE AN APPROVED REDUCED PRESSURE PRINCIPLE BACKFLOW PREVENTION ASSEMBLY (R.P.). THE INITIAL TEST OF THE R.P. SHALL BE PERFORMED BY THE DEPARTMENT. THE R.P. SHALL BE INSTALLED AS CLOSE AS POSSIBLE TO THE POINT OF SERVICE NOT TO EXCEED 48" WITHOUT PRIOR DEPARTMENT APPROVAL. THE R.P. DEVICE SHALL BE USC APPROVED PER FAC 62-555.360.*

POTABLE WATER TYPICAL CONNECTION FOR MULTIPLE SERVICES *

5W

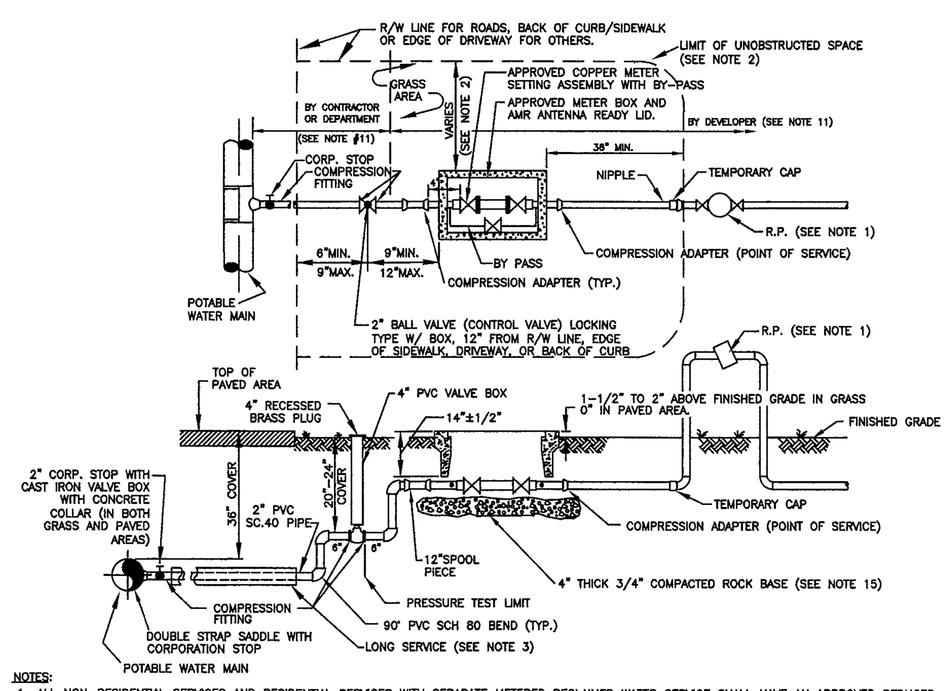

NOTES:

1. ALL NON-RESIDENTIAL SERVICES AND RESIDENTIAL SERVICES WITH SEPARATE METERED RECLAIMED WATER SERVICE SHALL HAVE AN APPROVED REDUCED PRESSURE PRINCIPLE BACKFLOW PREVENTION ASSEMBLY (R.P.). THE INITIAL TEST OF THE R.P. SHALL BE PERFORMED BY THE DEPARTMENT. THE R.P. SHALL BE INSTALLED AS CLOSE AS POSSIBLE TO THE POINT OF SERVICE NOT TO EXCEED 48" WITHOUT PRIOR DEPARTMENT APPROVAL. THE R.P. DEVICE SHALL BE USC APPROVED PER FAC 62-555.360.*
2. METER BOX SHALL BE LOCATED 12" MINIMUM FROM EDGE OF SIDEWALK, BACK OF CURB, OR EDGE OF DRIVEWAY WITH SOD ONLY WITHIN 5' MINIMUM AND NO TREES WITHIN 10' MINIMUM. IF METER BOX IS 18" OR LESS FROM A DRIVEWAY, THE BOX AND LID MUST BE RATED TIER 15.*
3. FOR INSTALLATION OF SERVICES UNDER DRIVEWAYS AND ROADWAYS, USE MIN. 4" DIAMETER BLACK IRON, PVC SCH 40, OR HDPE SDR 9 CASING. CASING SHALL EXTEND MIN. 24" BEYOND EDGE OF PAVEMENT. CASING TO BE SEALED WITH FOAM SEALANT. CASING SHALL BE COLOR-CODED BLACK, WHITE, BLUE, OR BLUE STRIPED.
4. SUCCESSIVE TAPS INTO THE WATER MAIN SHALL BE SPACED A MINIMUM OF 18" APART. TAPS SPACED BETWEEN 18" AND 48" SHALL BE OFFSET TO EACH SIDE OF THE MAIN. TAPS ON THE SAME SIDE OF A PVC PIPE SECTION SHALL BE MIN. 10' APART.
5. METER SHALL NOT BE PLACED IN SIDEWALK OR DRIVEWAY AREAS. WATER SERVICE LINES AND TAPS SHALL NOT BE PLACED UNDER DRIVEWAYS WHENEVER POSSIBLE AND IF REQUIRED, ONLY WITH PRIOR DEPARTMENT APPROVAL.
6. MAXIMUM SERVICE LENGTH IS 100' TO METER.
7. BEDDING (MIN. 4") AND COVER (MIN. 4") OVER SERVICE LINE OR CASING SHALL CONSIST OF FINE GRANULAR MATERIAL. UNSUITABLE IN-SITU MATERIALS SUCH AS MUCK, DEBRIS AND LARGER ROCKS SHALL BE REMOVED WITH 2" MAXIMUM SIZE.
8. METER/SERVICE WILL NOT BE INSTALLED/ACTIVATED UNTIL:
   A. ALL FORM BOARDS FOR DRIVEWAY AND/OR SIDEWALK MUST BE COMPLETELY INSTALLED OR THE DRIVEWAY AND/OR SIDEWALK MUST HAVE BEEN INSTALLED.
   B. "MINIMUM UNOBSTRUCTED SPACE" AS SHOWN IN NOTE 2 AND ON THE PLAN VIEW IS PROVIDED WITH 12" MINIMUM VERTICAL SEPARATION REQUIRED TO ALL OTHER UTILITIES.
   C. THE REQUIRED BACKFLOW PREVENTION ASSEMBLY/DEVICE IS INSTALLED AND HAS PASSED INITIAL TEST.
9. SERVICE COMPONENTS SHALL BE CONSTRUCTED FOR THE METER TO BE INSTALLED "TRUE" AND "PLUMB" AND TO ALLOW METER READING THROUGH THE METER READER LID.
10. APPROVED COPPER SETTER ASSEMBLY REQUIRED. PVC SHALL BE SCHEDULE 40 PIPE WITH SCHEDULE 80 FITTINGS. ALL BRASS FITTINGS SHALL BE "LEAD FREE".
11. METER TO BE INSTALLED BY THE DEPARTMENT. THE PIPING BEYOND THE CONTROL VALVE SHALL BE INSTALLED BY THE DEVELOPER OR THE DEPARTMENT, DEPENDING ON THE TYPE OF SERVICE INSTALLATION REQUESTED.
12. ALL HARDWARE FOR FLANGED CONNECTIONS (BOLTS, ETC.) TO BE STAINLESS STEEL.
13. THREADED AREAS OF CORPORATION STOP AND OTHER FITTINGS SHALL BE SPIRAL WRAPPED WITH TWO (2) WRAPS OF TEFLON TAPE. ALL BRASS FITTINGS SHALL BE "LEAD FREE".
14. METER BOXES IN NON-GRASS AREAS SHALL HAVE TRAFFIC RATED LIDS.
15. A 4" THICK COMPACTED 3/4" ROCK BASE IS REQUIRED. THE BASE SHALL EXTEND MINIMUM 12" BEYOND THE METER BOX PERIMETER.

POTABLE WATER 1 1/2" METER INSTALLATION *

6W

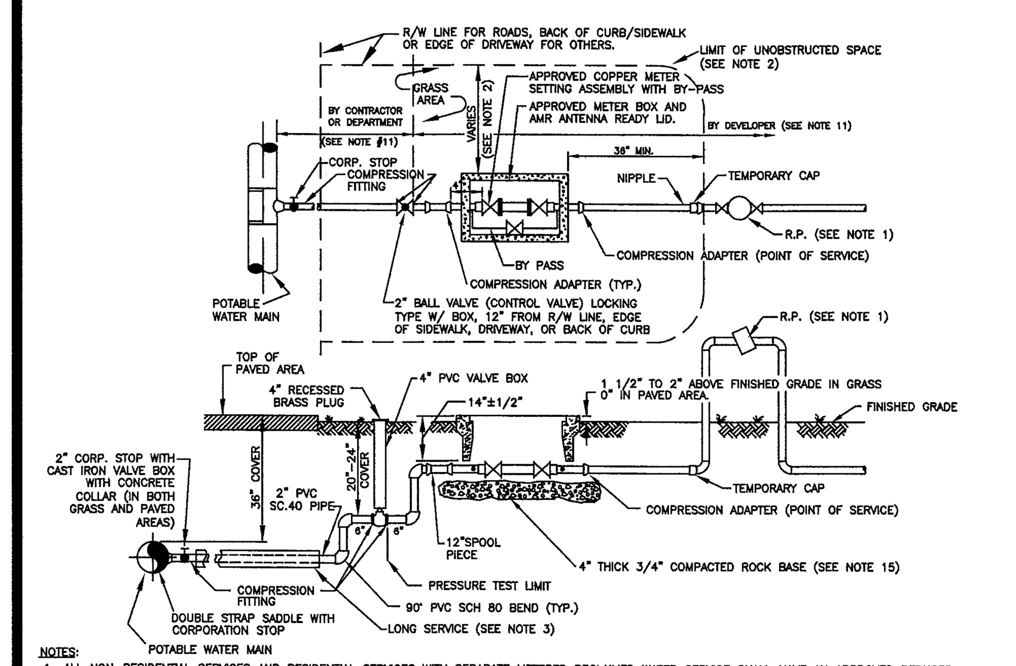

NOTES:

1. ALL NON-RESIDENTIAL SERVICES AND RESIDENTIAL SERVICES WITH SEPARATE METERED RECLAIMED WATER SERVICE SHALL HAVE AN APPROVED REDUCED PRESSURE PRINCIPLE BACKFLOW PREVENTION ASSEMBLY (R.P.). THE INITIAL TEST OF THE R.P. SHALL BE PERFORMED BY THE DEPARTMENT. THE R.P. SHALL BE INSTALLED AS CLOSE AS POSSIBLE TO THE POINT OF SERVICE NOT TO EXCEED 48" WITHOUT PRIOR DEPARTMENT APPROVAL. THE R.P. DEVICE SHALL BE USC APPROVED PER FAC 62-555.360.*
2. METER BOX SHALL BE LOCATED 12" MINIMUM FROM EDGE OF SIDEWALK, BACK OF CURB, OR EDGE OF DRIVEWAY WITH SOD ONLY WITHIN 5' MINIMUM AND NO TREES WITHIN 10' MINIMUM. IF METER BOX IS 18" OR LESS FROM A DRIVEWAY, THE BOX AND LID MUST BE RATED TIER 15.*
3. FOR INSTALLATION OF SERVICES UNDER DRIVEWAYS AND ROADWAYS, USE MIN. 4" DIAMETER BLACK IRON, PVC SCH 40, OR HDPE SDR 9 CASING. CASING SHALL EXTEND MIN. 24" BEYOND EDGE OF PAVEMENT. CASING TO BE SEALED WITH FOAM SEALANT. CASING SHALL BE COLOR-CODED BLACK, WHITE, BLUE, OR BLUE STRIPED.
4. SUCCESSIVE TAPS INTO THE WATER MAIN SHALL BE SPACED A MINIMUM OF 18" APART. TAPS SPACED BETWEEN 18" AND 48" SHALL BE OFFSET TO EACH SIDE OF THE MAIN. TAPS ON THE SAME SIDE OF A PVC PIPE SECTION SHALL BE MIN. 10' APART.
5. METER SHALL NOT BE PLACED IN SIDEWALK OR DRIVEWAY AREAS. WATER SERVICE LINES AND TAPS SHALL NOT BE PLACED UNDER DRIVEWAYS WHENEVER POSSIBLE AND IF REQUIRED, ONLY WITH PRIOR DEPARTMENT APPROVAL.
6. MAXIMUM SERVICE LENGTH IS 100' TO METER.
7. BEDDING (MIN. 4") AND COVER (MIN. 4") OVER SERVICE LINE OR CASING SHALL CONSIST OF FINE GRANULAR MATERIAL. UNSUITABLE IN-SITU MATERIALS SUCH AS MUCK, DEBRIS AND LARGER ROCKS SHALL BE REMOVED WITH 2" MAXIMUM SIZE.
8. METER/SERVICE WILL NOT BE INSTALLED/ACTIVATED UNTIL:
   A. ALL FORM BOARDS FOR DRIVEWAY AND/OR SIDEWALK MUST BE COMPLETELY INSTALLED OR THE DRIVEWAY AND/OR SIDEWALK MUST HAVE BEEN INSTALLED.
   B. "MINIMUM UNOBSTRUCTED SPACE" AS SHOWN IN NOTE 2 AND ON THE PLAN VIEW IS PROVIDED WITH 12" MINIMUM VERTICAL SEPARATION REQUIRED TO ALL OTHER UTILITIES.
   C. THE REQUIRED BACKFLOW PREVENTION ASSEMBLY/DEVICE IS INSTALLED AND HAS PASSED INITIAL TEST.
9. SERVICE COMPONENTS SHALL BE CONSTRUCTED FOR THE METER TO BE INSTALLED "TRUE" AND "PLUMB" AND TO ALLOW METER READING THROUGH THE METER READER LID.
10. APPROVED COPPER SETTER ASSEMBLY REQUIRED. PVC SHALL BE SCHEDULE 40 PIPE WITH SCHEDULE 80 FITTINGS. ALL BRASS FITTINGS SHALL BE "LEAD FREE".
11. METER TO BE INSTALLED BY THE DEPARTMENT. THE PIPING BEYOND THE CONTROL VALVE SHALL BE INSTALLED BY THE DEVELOPER OR THE DEPARTMENT, DEPENDING ON THE TYPE OF SERVICE INSTALLATION REQUESTED.
12. ALL HARDWARE FOR FLANGED CONNECTIONS (BOLTS, ETC.) TO BE STAINLESS STEEL.
13. THREADED AREAS OF CORPORATION STOP AND OTHER FITTINGS SHALL BE SPIRAL WRAPPED WITH TWO (2) WRAPS OF TEFLON TAPE. ALL BRASS FITTINGS SHALL BE "LEAD FREE".
14. METER BOXES IN NON-GRASS AREAS SHALL HAVE TRAFFIC RATED LIDS.
15. A 4" THICK COMPACTED 3/4" ROCK BASE IS REQUIRED. THE BASE SHALL EXTEND MINIMUM 12" BEYOND THE METER BOX PERIMETER.

POTABLE WATER 2" METER INSTALLATION *

7W

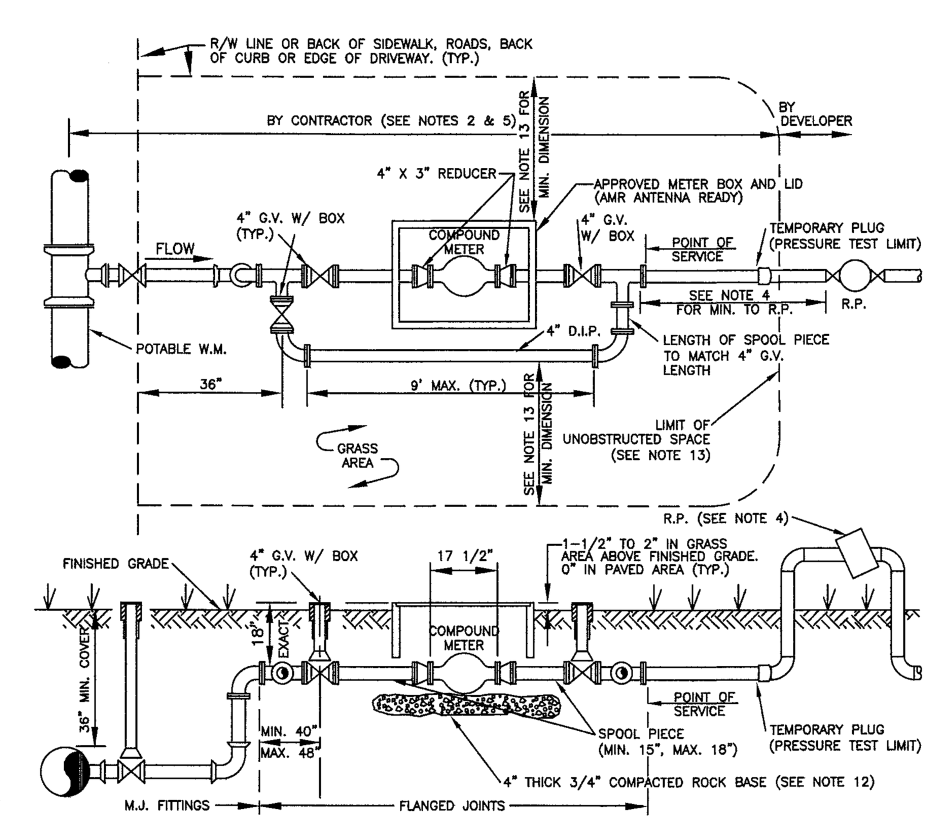

NOTES:

1. ALL SERVICE PIPING SHALL BE 4" DUCTILE IRON WITH 4" GATE VALVES WITH VALVE BOXES AND CONCRETE COLLARS (IF APPLICABLE).
2. ONLY APPROVED METER BOXES SHALL BE USED. THE METER BOX LID SHALL BE A DEPARTMENT APPROVED LID. THE BOX AND LID SHALL BE PROVIDED BY THE CUSTOMER AND PLACED ABOVE GROUND NEAR THE METER LOCATION. THE PROPERTY OWNER SHALL EXCAVATE THE METER BOX AREA TO EXPOSE THE BYPASS PIPING THEN INSTALL THE BOX AND BACKFILL THE AREA AFTER THE METER INSTALLATION.
3. APPROVED RESTRAINED FLANGED ADAPTERS ARE REQUIRED. PLACE 4"x3" FLANGED REDUCERS AS SHOWN ON DETAIL.
4. ALL SERVICES SHALL HAVE AN APPROVED REDUCED PRESSURE PRINCIPLE BACKFLOW PREVENTION ASSEMBLY (R.P.). THE INITIAL TEST OF THE R.P. SHALL BE PERFORMED BY THE DEPARTMENT. THE R.P. SHALL BE INSTALLED AS CLOSE AS POSSIBLE TO THE POINT OF SERVICE AT 36" MINIMUM AND NOT TO EXCEED 48" WITHOUT PRIOR DEPARTMENT APPROVAL. THE R.P. DEVICE SHALL BE USC APPROVED PER FAC 62-555.360.*
5. WATER METER SHALL BE INSTALLED BY THE DEPARTMENT. LAYING LENGTH OF THE METER TO BE CONFIRMED PRIOR TO SERVICE INSTALLATION.
6. SERVICE COMPONENTS SHALL BE CONSTRUCTED FOR THE METER TO BE INSTALLED "TRUE" AND "PLUMB".
7. THE ENTIRE ASSEMBLY (WITHOUT METER/SPOOL PIECES AS SHOWN) SHALL BE PRESSURE TESTED AS REQUIRED.
8. METER/SERVICE WILL NOT BE INSTALLED/ACTIVATED UNTIL:
   A. ALL FORM BOARDS FOR DRIVEWAY AND/OR SIDEWALK MUST BE COMPLETELY INSTALLED OR THE DRIVEWAY AND/OR SIDEWALK MUST HAVE BEEN INSTALLED.
   B. "MINIMUM UNOBSTRUCTED SPACE" AS SHOWN IN NOTE 2 AND ON THE PLAN VIEW IS PROVIDED WITH 12" MINIMUM VERTICAL SEPARATION REQUIRED TO ALL OTHER UTILITIES.
   C. THE REQUIRED BACKFLOW PREVENTION ASSEMBLY/DEVICE IS INSTALLED AND HAS PASSED INITIAL TEST.
9. BYPASS PIPING SHALL BE INSTALLED ON THE RIGHT SIDE OF METER IN DIRECTION OF FLOW UNLESS OTHERWISE PREVIOUSLY APPROVED BY THE DEPARTMENT.
10. ALL HARDWARE FOR FLANGED CONNECTIONS (BOLTS, ETC.) TO BE STAINLESS STEEL.
11. METER BOX LID SHALL BE TRAFFIC RATED FOR ALL INSTALLATION LOCATIONS.
12. A 4" THICK COMPACTED 3/4" ROCK BASE IS REQUIRED. THE BASE SHALL EXTEND MINIMUM 12" BEYOND THE METER BOX PERIMETER.
13. LIMIT OF UNOBSTRUCTED SPACE FROM SIDE OF WATER METER BOX AND BYPASS PIPING SHALL BE 36" MINIMUM FOR SHRUBS AND SIMILAR OBSTRUCTIONS WITH 60" MINIMUM FOR TREES, WALLS, AND OTHER SIMILAR OBSTRUCTIONS.

POTABLE WATER 3" METER INSTALLATION RESIDENTIAL ONLY* *

8WA

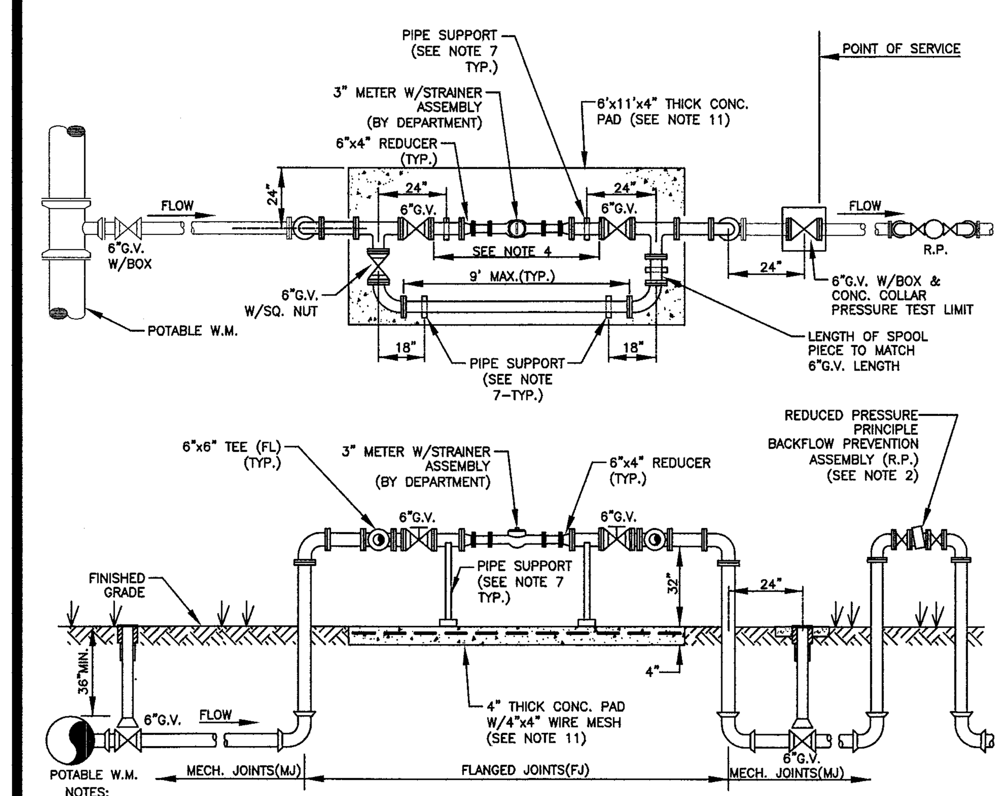

NOTES:

1. ALL SERVICE PIPING SHALL BE 6" DUCTILE IRON WITH 6" GATE VALVES. THE 6" GATE VALVE FOR BYPASS PIPING SHALL HAVE A SQUARE NUT.
2. ALL SERVICES SHALL HAVE AN APPROVED REDUCED PRESSURE PRINCIPLE BACKFLOW PREVENTION ASSEMBLY (R.P.). THE INITIAL TEST OF THE R.P. SHALL BE PERFORMED BY THE DEPARTMENT. THE R.P. SHALL BE INSTALLED AS CLOSE AS POSSIBLE TO THE POINT OF SERVICE, NOT TO EXCEED 48" WITHOUT PRIOR DEPARTMENT APPROVAL. THE R.P. DEVICE SHALL BE USC APPROVED PER FAC 62-555.360.*
3. APPROVED RESTRAINED FLANGED ADAPTERS ARE REQUIRED.
4. THE ENTIRE METER ASSEMBLY INCLUDING BYPASS (EXCLUDING WATER METER) SHALL BE PRESSURE TESTED AS REQUIRED.
5. WATER METER SHALL BE INSTALLED BY THE DEPARTMENT. LAYING LENGTH OF THE METER TO BE CONFIRMED PRIOR TO SERVICE INSTALLATION.
6. SERVICE COMPONENTS SHALL BE CONSTRUCTED FOR THE METER TO BE INSTALLED "TRUE" AND "PLUMB".
7. PIPE SUPPORTS SHALL BE CONSTRUCTED PER WUD STANDARD DETAIL 47W AND SHALL BE LOCATED PER THIS DETAIL.
8. METER/SERVICE WILL NOT BE INSTALLED/ACTIVATED UNTIL:
   A. ALL FORM BOARDS FOR DRIVEWAY AND/OR SIDEWALK MUST BE COMPLETELY INSTALLED OR THE DRIVEWAY AND/OR SIDEWALK MUST HAVE BEEN INSTALLED.
   B. "MINIMUM UNOBSTRUCTED SPACE" AS SHOWN IN NOTE 12 AND ON THE PLAN VIEW IS PROVIDED.
   C. THE REQUIRED BACKFLOW PREVENTION ASSEMBLY/DEVICE IS INSTALLED AND HAS PASSED INITIAL TEST.
9. BYPASS PIPING SHALL BE INSTALLED ON THE RIGHT SIDE OF METER IN DIRECTION OF FLOW UNLESS OTHERWISE PREVIOUSLY APPROVED BY THE DEPARTMENT.
10. ALL HARDWARE FOR FLANGED CONNECTIONS SHALL BE STAINLESS STEEL 304 OR PRIOR APPROVED EQUAL BY THE DEPARTMENT.
11. CONCRETE PAD FOR WATER METER ASSEMBLY SHALL BE 4" THICK WITH 4"x4" WIRE MESH. CONCRETE PAD IS REQUIRED TO BE BROOM FINISHED AND INSTALLED PRIOR TO THE WATER METER ASSEMBLY.
12. LIMIT OF UNOBSTRUCTED SPACE FROM SIDE OF WATER METER ASSEMBLY CONCRETE PAD SHALL BE 36" MINIMUM FOR SHRUBS AND SIMILAR OBSTRUCTIONS WITH 60" MINIMUM FOR TREES, WALLS, AND OTHER SIMILAR OBSTRUCTIONS.

POTABLE WATER 3" METER INSTALLATION NON-RESIDENTIAL ONLY* *

8WB

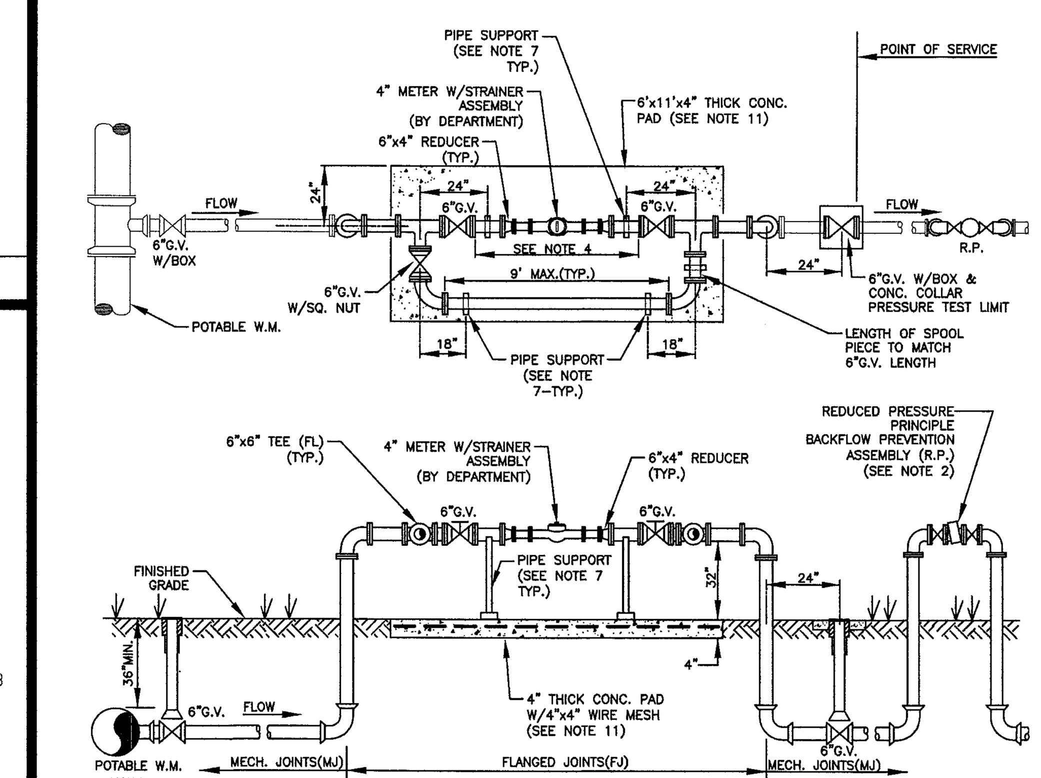

NOTES:

1. ALL SERVICE PIPING SHALL BE 6" DUCTILE IRON WITH 6" GATE VALVES. THE 6" GATE VALVE FOR BYPASS PIPING SHALL HAVE A SQUARE NUT.
2. ALL SERVICES SHALL HAVE AN APPROVED REDUCED PRESSURE PRINCIPLE BACKFLOW PREVENTION ASSEMBLY (R.P.). THE INITIAL TEST OF THE R.P. SHALL BE PERFORMED BY THE DEPARTMENT. THE R.P. SHALL BE INSTALLED AS CLOSE AS POSSIBLE TO THE POINT OF SERVICE, NOT TO EXCEED 48" WITHOUT PRIOR DEPARTMENT APPROVAL. THE R.P. DEVICE SHALL BE USC APPROVED PER FAC 62-555.360.*
3. APPROVED RESTRAINED FLANGED ADAPTERS ARE REQUIRED.
4. THE ENTIRE METER ASSEMBLY INCLUDING BYPASS (EXCLUDING WATER METER) SHALL BE PRESSURE TESTED AS REQUIRED.
5. WATER METER SHALL BE INSTALLED BY THE DEPARTMENT. LAYING LENGTH OF THE METER TO BE CONFIRMED PRIOR TO SERVICE INSTALLATION.
6. SERVICE COMPONENTS SHALL BE CONSTRUCTED FOR THE METER TO BE INSTALLED "TRUE" AND "PLUMB".
7. PIPE SUPPORTS SHALL BE CONSTRUCTED PER WUD STANDARD DETAIL 47W AND SHALL BE LOCATED PER THIS DETAIL.
8. METER/SERVICE WILL NOT BE INSTALLED/ACTIVATED UNTIL:
   A. ALL FORM BOARDS FOR DRIVEWAY AND/OR SIDEWALK MUST BE COMPLETELY INSTALLED OR THE DRIVEWAY AND/OR SIDEWALK MUST HAVE BEEN INSTALLED.
   B. "MINIMUM UNOBSTRUCTED SPACE" AS SHOWN IN NOTE 12 AND ON THE PLAN VIEW IS PROVIDED.
   C. THE REQUIRED BACKFLOW PREVENTION ASSEMBLY/DEVICE IS INSTALLED AND HAS PASSED INITIAL TEST.
9. BYPASS PIPING SHALL BE INSTALLED ON THE RIGHT SIDE OF METER IN DIRECTION OF FLOW UNLESS OTHERWISE PREVIOUSLY APPROVED BY THE DEPARTMENT.
10. ALL HARDWARE FOR FLANGED CONNECTIONS SHALL BE STAINLESS STEEL 304 OR PRIOR APPROVED EQUAL BY THE DEPARTMENT.
11. CONCRETE PAD FOR WATER METER ASSEMBLY SHALL BE 4" THICK WITH 4"x4" WIRE MESH. CONCRETE PAD IS REQUIRED TO BE BROOM FINISHED AND INSTALLED PRIOR TO THE WATER METER ASSEMBLY.
12. LIMIT OF UNOBSTRUCTED SPACE FROM SIDE OF WATER METER ASSEMBLY CONCRETE PAD SHALL BE 36" MINIMUM FOR SHRUBS AND SIMILAR OBSTRUCTIONS WITH 60" MINIMUM FOR TREES, WALLS, AND OTHER SIMILAR OBSTRUCTIONS.

POTABLE WATER 4" METER INSTALLATION *

9W

POTABLE WATER #1 STANDARD DETAILS

WUD PROJECT No. 24-567

13980 89th Pl N
West Palm Beach, FL 33412

PALM BEACH COUNTY WATER UTILITIES DEPARTMENT
P.O. BOX 16097
WEST PALM BEACH, FL 33416
(561)493-6000

NO.	DATE	REVISION / REMARKS	BY
	JUNE 2019	GENERAL REVISION	J.L.
*	JAN 2023	GENERAL REVISION	J.L.

STD DETAILS

SHEET NUMBER 4 OF 9

CONSULTANT:

IT'S THE LAW ! CALL 48 HOURS BEFORE YOU DIG 1-800-432-4770 SUNSHINE STATE ONE CALL OF FLORIDA, INC. UTILITIES NOTIFICATION CENTER

DESIGNED BY: WUD
DRAWN BY: M. BUCKNER
CHECKED BY: J. LAMMERT
APPROVED BY: WUD

Palm Beach County
Water Utilities Department
P.O.Box 16097
West Palm Beach, FL 33416-6097

SEAL

JOSHUA N. LERMAN LICENSE No. 93768 STATE OF FLORIDA PROFESSIONAL ENGINEER

Feb 27, 2023

Drawing: W:_WUD 2023 STD DTL REVS\WUD 2023 STD DTL SHEETS\WUD 2023 STD DTLS - POTABLE WATER (6 SHTS).dwg\WUD PWS-1 - Last Modified: Mon, Feb 27, 2023 - 2:03pm

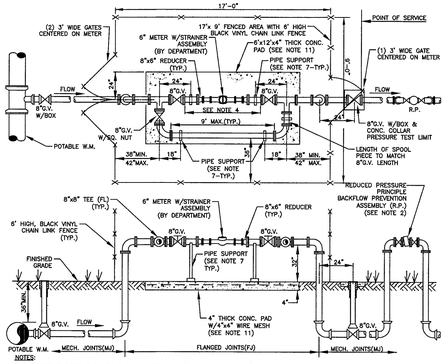

NOTES:

1. ALL SERVICE PIPING SHALL BE 6" DUCTILE IRON WITH 8" GATE VALVES. THE 8" GATE VALVE FOR BYPASS PIPING SHALL HAVE A SQUARE NUT.
2. ALL SERVICES SHALL HAVE AN APPROVED REDUCED PRESSURE PRINCIPLE BACKFLOW PREVENTION ASSEMBLY (R.P.). THE INITIAL TEST OF THE R.P. SHALL BE PERFORMED BY THE DEPARTMENT. THE R.P. SHALL BE INSTALLED AS CLOSE AS POSSIBLE TO THE POINT OF SERVICE, NOT TO EXCEED 48" WITHOUT PRIOR DEPARTMENT APPROVAL. THE R.P. DEVICE SHALL BE USC APPROVED PER FAC 62-555.360.W
3. APPROVED RESTRAINED FLANGED ADAPTERS ARE REQUIRED.
4. THE ENTIRE METER ASSEMBLY INCLUDING BYPASS (EXCLUDING WATER METER) SHALL BE PRESSURE TESTED AS REQUIRED.
5. WATER METER SHALL BE INSTALLED BY THE DEPARTMENT. LAYING LENGTH OF THE METER TO BE CONFIRMED PRIOR TO SERVICE INSTALLATION.
6. SERVICE COMPONENTS SHALL BE CONSTRUCTED FOR THE METER TO BE INSTALLED "TRUE" AND "PLUMB".
7. PIPE SUPPORTS SHALL BE CONSTRUCTED PER WUD STANDARD DETAIL 47W AND SHALL BE LOCATED PER THIS DETAIL.
8. METER/SERVICE WILL NOT BE INSTALLED/ACTIVATED UNTIL:
   A. ALL FORM BOARDS FOR DRIVEWAY AND/OR SIDEWALK MUST BE COMPLETELY INSTALLED OR THE DRIVEWAY AND/OR SIDEWALK MUST HAVE BEEN INSTALLED.
   B. "MINIMUM UNOBSTRUCTED SPACE" AS SHOWN IN NOTE 12 AND ON THE PLAN VIEW IS PROVIDED.
   C. THE REQUIRED BACKFLOW PREVENTION ASSEMBLY/DEVICE IS INSTALLED AND HAS PASSED INITIAL TEST.
9. BYPASS PIPING SHALL BE INSTALLED ON THE RIGHT SIDE OF METER IN DIRECTION OF FLOW UNLESS OTHERWISE PREVIOUSLY APPROVED BY THE DEPARTMENT.
10. ALL HARDWARE FOR FLANGED CONNECTIONS SHALL BE STAINLESS STEEL 304 OR PROPER APPROVED EQUAL BY THE DEPART.
11. CONCRETE PAD FOR WATER METER ASSEMBLY SHALL BE 4" THICK WITH 4"x4" WIRE MESH. CONCRETE PAD IS REQUIRED TO BE BROOM FINISHED AND INSTALLED PRIOR TO THE WATER METER ASSEMBLY.
12. LIMIT OF UNOBSTRUCTED SPACE FROM SIDE OF WATER METER ASSEMBLY CONCRETE PAD SHALL BE 36" MINIMUM FOR SHRUBS AND SIMILAR OBSTRUCTIONS WITH 60" MINIMUM FOR TREES, WALLS, AND OTHER SIMILAR OBSTRUCTIONS.

POTABLE WATER
6" METER INSTALLATION

10W

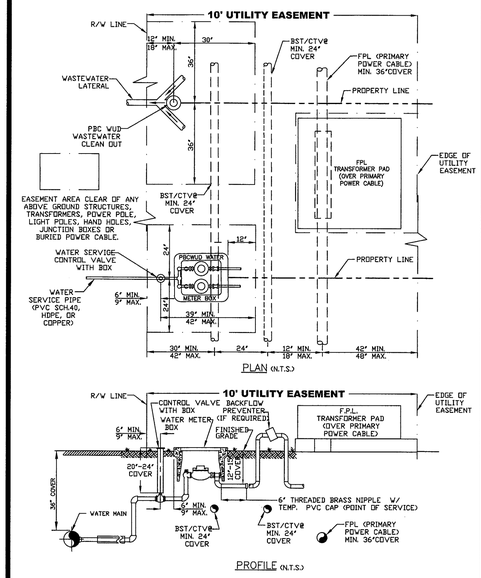

NOTES:

1. THE DETAIL WAS DEVELOPED IN COLLABORATION WITH UTILITY COMPANIES SUPPLYING VARIOUS UTILITY SERVICES TO P.B.C.W.U.D. CUSTOMERS.
2. THE DIMENSIONS SHOWN SHALL SERVE AS A GENERAL GUIDELINE TO INSTALL UTILITIES WITHIN A 10' WIDE UTILITY EASEMENT PARALLELING A RIGHT-OF-WAY.
3. THE PARTICIPATING UTILITIES PLEDGE TO OBSERVE, FOLLOW, AND ENFORCE THE INSTALLATION PARAMETERS SHOWN ON THIS DETAIL.

TYPICAL UTILITY INSTALLATION DETAIL IN A
10' UTILITY EASEMENT ADJACENT TO R/W

11WA

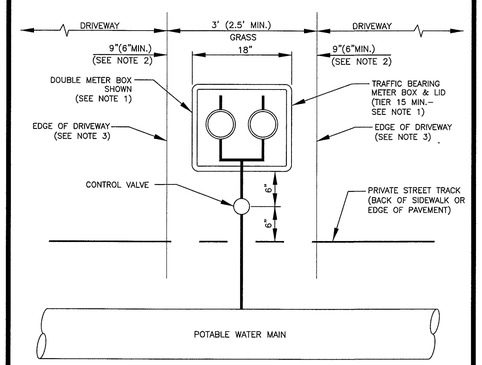

NOTES:

1. METER BOX AND LID MUST BE TIER 15 RATED MINIMUM AND APPLIES TO BOTH A SINGLE METER BOX OR A DOUBLE METER BOX.
2. WHEN INSTALLING A SINGLE METER BOX THE 9" DIMENSION APPLIES. THEN WHEN INSTALLING A DOUBLE METER BOX THE 6" MINIMUM DIMENSION WILL APPLY.
3. THE EDGE OF THE DRIVEWAY IS EITHER THE ASPHALT/CONCRETE PAVEMENT AREA AND/OR PAVER BRICK AREA WHICH MAY INCLUDE ANY CONCRETE EDGING.

WATER METER BOX
BETWEEN TOWNHOME DRIVEWAYS DETAIL

11WB

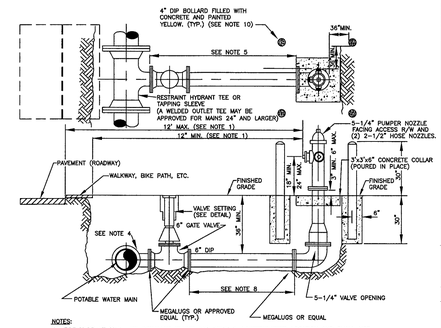

NOTES:

1. FIRE HYDRANT SHALL BE INSTALLED PLUMB AND TRUE IN UNOBSTRUCTED LOCATION AND SHALL NOT INTERFERE WITH PEDESTRIAN WALKWAYS, BIKE PATHS, AND SUCH OTHER SIMILAR PATHWAYS WITH THE EDGE OF THE PUMPER NOZZLE AND/OR HOSE NOZZLES BEING A MINIMUM OF 12" BEHIND SUCH PATHWAYS. A MINIMUM OF 7.5' FEET CLEARANCE IS REQUIRED FROM EACH SIDE AND REAR OF THE HYDRANT. THE FRONT OF THE HYDRANT PUMPER NOZZLE SHALL BE LOCATED A MAXIMUM OF 12' FROM THE EDGE OF PAVEMENT UNLESS OTHERWISE PREVIOUSLY APPROVED BY THE FIRE MARSHAL OFFICE HAVING JURISDICTION.
2. THE SAME MODEL HYDRANT SHALL BE USED THROUGHOUT THE SAME PROJECT OR CONTRACT PHASE. HYDRANTS MUST BE ORDERED RED IN COLOR, WITH FINISHED EPOXY COAT APPLIED BY THE HYDRANT MANUFACTURER. HYDRANT SHALL BE FACTORY EQUIPPED WITH PLUGGED DRAIN HOLES.
3. VALVE SHALL BE PLACED ADJACENT TO MAIN AND RESTRAINED WITH MEGALUGS OR EQUAL.
4. ALL HYDRANTS SHALL BE TEE'D OF THE MAIN PREFERABLY BY A TEE OR TAPPING SLEEVE WITH PRIOR DEPARTMENT APPROVAL.
5. ALL D.I.P. MATERIALS SHALL BE USED BETWEEN TEE/TAPPING SLEEVE AND HYDRANT.
6. HYDRANTS SHALL NOT BE PLACED IN SIDEWALKS, ROADWAYS, OR BIKEPATHS.
7. FIRE HYDRANT SHALL BE LOCATED 5' MINIMUM FROM EDGE OF PAVEMENT WITH RAISED CURBING AND 7' MINIMUM WITHOUT RAISED CURBING.
8. ON RUNS LONGER THAN 60 FEET ANOTHER VALVE IS REQUIRED LESS THAN ONE PIPE JOINT FROM THE HYDRANT.
9. PAINT SAFETY RED, IF REQUIRED, WITH APPROVED PAINT.
10. BOLLARDS MAY BE REQUIRED FOR HYDRANTS WITH LESS THAN SIX (6) FEET TO EDGE OF PAVEMENT WITHOUT RAISED CURBING. NO BOLLARDS SHALL BE INSTALLED IN COUNTY AND/OR FDOT RIGHT-OF-WAY "CLEAR ZONE".
11. BURIED HYDRANT HARDWARE SHALL BE STAINLESS STEEL (TYPE 304L OR TYPE 304 BOLTS/TYPE 304 NUTS).
12. NO CONNECTION (TEE, TAP) IS ALLOWED BETWEEN THE HYDRANT CONTROL VALVE AND THE FIRE HYDRANT.
13. APPROVED SECURITY CAPS WITH CHAINS ARE REQUIRED FOR ALL NOZZLES.

TYPICAL FIRE HYDRANT INSTALLATION WITH
BOLLARDS DETAIL

12W

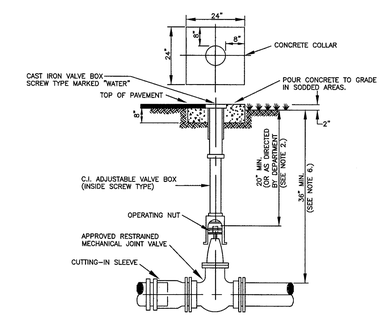

NOTES:

1. CONCRETE COLLAR IS NOT REQUIRED IN PAVED AREAS IF PAVEMENT SURFACE IS FINISHED PRIOR TO CONDITIONAL FINAL INSPECTION.
2. WHEN OPERATING NUT IS DEEPER THAN 36" A ONE PIECE EXTENSION WILL BE REQUIRED TO BRING OPERATING NUT 20"-30" BELOW FINISHED GRADE. EXTENSION BOLTS & NUTS ARE TO BE STAINLESS STEEL. A HIGH STRENGTH STEEL CENTERING PLATE, WELDED TO THE EXTENSION, IS ALSO REQUIRED.
3. VALVE BOXES SHALL HAVE COVERS MARKED "WATER".
4. VALVE BOX EXTENSION TO BE D.I.P. OR C-900 PVC SDR 18 (BLUE)
5. A CUT-IN INSTALLATION SHALL REQUIRE MEGALUGS OR EQUAL THROUGHOUT ASSEMBLY.
6. IN ORDER TO MAINTAIN ADEQUATE COVER OVER VALVE NUT, THE FOLLOWING MINIMUM COVERS OVER PIPE ARE REQUIRED.

GATE VALVE SIZE	MIN. COVER OVER PIPE
16"	48"
20"	54"
24"	60"
30"	72"
36"	84"

7. VALVES IN ROADWAYS SHALL BE LOCATED OUTSIDE OF WHEEL PATHS WHENEVER POSSIBLE.

POTABLE WATER MAIN TYPICAL GATE VALVE
SETTING AND MAIN CUT-IN DETAIL

13W

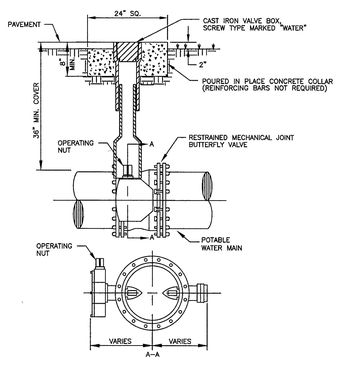

NOTES:

1. CONCRETE COLLAR IS NOT REQUIRED IN PAVED AREAS IF PAVEMENT SURFACE IS FINISHED PRIOR TO CONDITIONAL FINAL INSPECTION.
2. WHEN TOP OF OPERATING NUT IS DEEPER THAN 42" AN EXTENSION WILL BE REQUIRED TO BRING OPERATING NUT 24"-30" BELOW FINISHED GRADE. EXTENSION BOLTS & NUTS ARE TO BE STAINLESS STEEL. A HIGH STRENGTH STEEL CENTERING PLATE, WELDED TO THE EXTENSION, IS ALSO REQUIRED.
3. VALVE BOXES SHALL HAVE COVERS MARKED "WATER".
4. A CUT-IN INSTALLATION SHALL REQUIRE MEGALUGS OR EQUAL THROUGHOUT ASSEMBLY.
5. EXTENSION VALVE BOX TO BE D.I.P. OR C-900 PVC DR 18 (COLOR: BLUE)
6. VALVES IN ROADWAYS SHALL BE LOCATED OUTSIDE OF WHEEL PATHS WHENEVER POSSIBLE.

POTABLE WATER MAIN
TYPICAL BUTTERFLY VALVE SETTING

14W

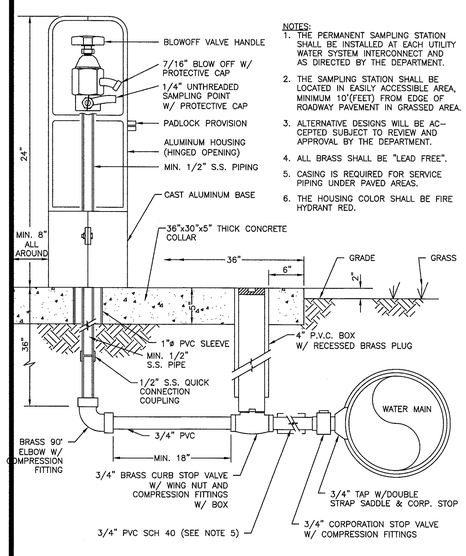

NOTES:

1. THE PERMANENT SAMPLING STATION SHALL BE INSTALLED AT EACH UTILITY WATER SYSTEM INTERCONNECT AND AS DIRECTED BY THE DEPARTMENT.
2. THE SAMPLING STATION SHALL BE LOCATED IN EASILY ACCESSIBLE AREA, MINIMUM 10'(FEET) FROM EDGE OF ROADWAY PAVEMENT IN GRASSED AREA.
3. ALTERNATIVE DESIGNS WILL BE ACCEPTED SUBJECT TO REVIEW AND APPROVAL BY THE DEPARTMENT.
4. ALL BRASS SHALL BE "LEAD FREE".
5. CASING IS REQUIRED FOR SERVICE PIPING UNDER PAVED AREAS.
6. THE HOUSING COLOR SHALL BE FIRE HYDRANT RED.

PERMANENT SAMPLING POINT

15W

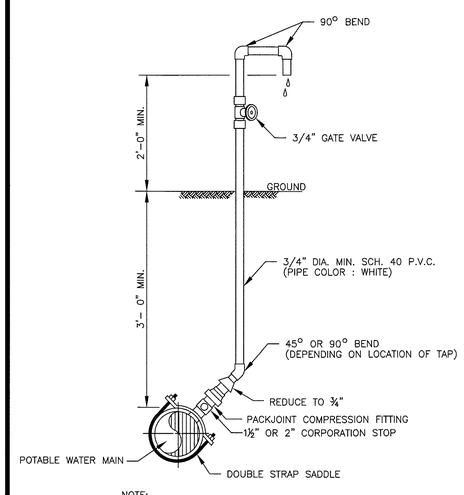

NOTE:

1. SAMPLE POINT SHOULD BE A SERVICE LINE OR FIRE HYDRANT IF POSSIBLE.
2. THREADED AREAS OF CORPORATION STOP SHALL BE SPIRAL WRAPPED WITH TWO WRAPS OF TEFLON TAPE.
3. CLOSE AND CAP CORPORATION STOP AFTER SAMPLING COMPLETION.

POTABLE WATER MAIN TEMPORARY SAMPLING POINT

16W

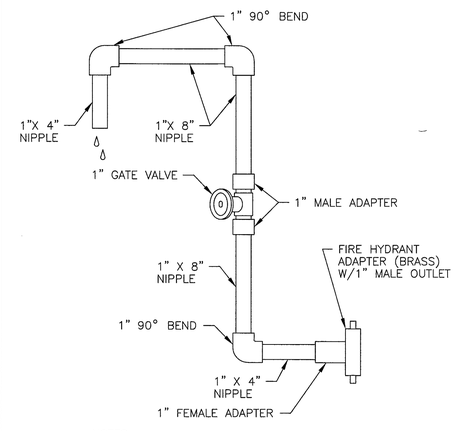

NOTES:

1. USE HYDRANT WRENCH ONLY.
2. ALL PIPES AND FITTINGS SCH. 40 P.V.C. (PIPE COLOR : WHITE).

POTABLE WATER MAIN FIRE HYDRANT SAMPLING POINT

17W

THIS SPACE INTENTIONALLY LEFT BLANK

POTABLE WATER #2
STANDARD DETAILS

CONSULTANT:

IT'S THE LAW! CALL 48 HOURS BEFORE YOU DIG 1-800-432-4770 SUNSHINE STATE ONE CALL OF FLORIDA, INC. UTILITIES NOTIFICATION CENTER

DESIGNED BY: WUD
DRAWN BY: M. BUCKNER
CHECKED BY: J. LAMMERT
APPROVED BY: WUD

Palm Beach County
Water Utilities Department
P.O.Box 16097
West Palm Beach, FL 33416-6097

SEAL
JOSHUA N. LERMAN LICENSE No. 93768 STATE OF FLORIDA PROFESSIONAL ENGINEER
Mar 01, 2023

NO.	DATE	REVISION / REMARKS	BY
	JUNE 2019	GENERAL REVISION	J.L.
	JAN 2023	GENERAL REVISION	J.L.

STD DETAILS

SHEET NUMBER 5 OF 9

WUD PROJECT No. 24-567

13980 89th Pl N
West Palm Beach, FL 33412

PALM BEACH COUNTY WATER UTILITIES DEPARTMENT
P.O. BOX 16097
WEST PALM BEACH, FL 33416
(561)493-6000

Drawing: W:_WUD 2023 STD DTL REVS\WUD 2023 STD DTL SHEETS\WUD 2023 STD DTLS - POTABLE WATER (6 SHTS).dwg\WUD PWS-2 - Last Modified: Wed, Mar 01, 2023 - 3:13pm

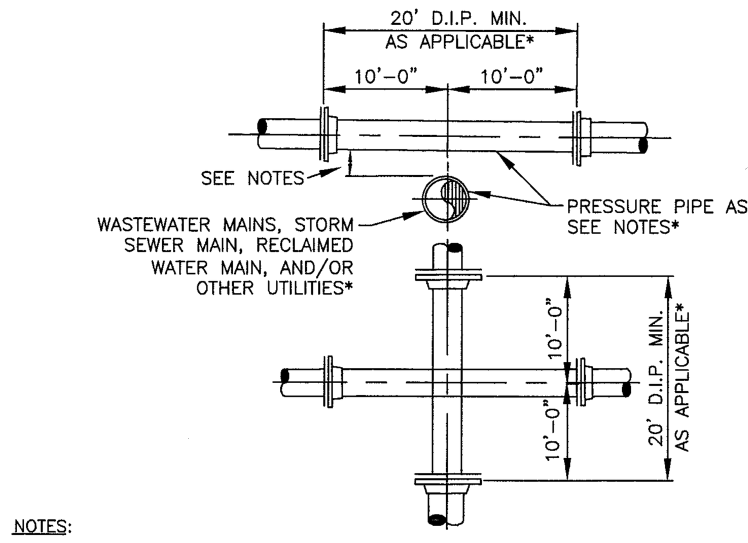

NOTES:

1. WHEN A POTABLE WATER MAIN CROSSES OVER A STORM SEWER, GRAVITY WASTEWATER, VACUUM GRAVITY WASTEWATER, WASTEWATER FORCE MAIN, AND/OR A RECLAIMED WATER MAIN THE POTABLE WATER MAIN SHALL BE LAID TO PROVIDE A MINIMUM OF TWELVE (12) INCH VERTICAL SEPARATION BETWEEN THE BOTTOM OF THE UPPER PIPE AND THE CROWN OF THE LOWER PIPE. WHEN THE MINIMUM TWELVE (12) INCH VERTICAL SEPARATION CANNOT BE OBTAINED, A MINIMUM SIX (6) INCH VERTICAL SEPARATION IS PERMITTED PROVIDED THAT A TWENTY (20) FOOT SECTION OF POTABLE WATER DUCTILE IRON PIPE MAIN IS CENTERED ON CROSSING WITH THE LOWER PIPE BEING A PRESSURE CLASS PIPE HAVING A TWENTY (20) FOOT SECTION CENTERED ON THE CROSSING PER DEP REGULATIONS. WHEN THE POTABLE WATER MAIN CROSSES UNDER ANY STORM SEWER, GRAVITY WASTEWATER, VACUUM GRAVITY WASTEWATER, WASTEWATER FORCE MAIN, AND/OR A RECLAIMED WATER MAIN A MINIMUM TWELVE (12) INCH VERTICAL SEPARATION IS REQUIRE WITH NO EXCEPTIONS AND ONLY WITH PRIOR DEPARTMENT APPROVAL. *
2. A TEN (10) FOOT MINIMUM HORIZONTAL SEPARATION (OUTSIDE WALL TO OUTSIDE WALL) IS REQUIRED BETWEEN A POTABLE WATER MAIN AND A STORM SEWER, GRAVITY WASTEWATER, VACUUM GRAVITY WASTEWATER, WASTEWATER FORCE MAIN, AND/OR A RECLAIMED WATER MAIN. A SIX (6) FOOT MINIMUM HORIZONTAL SEPARATION (OUTSIDE WALL TO OUTSIDE WALL) IS ACCEPTABLE WITH PRIOR DEPARTMENT APPROVAL BEFORE THE INSTALLATION OF THE POTABLE WATER MAIN. A THREE (3) FOOT MINIMUM HORIZONTAL SEPARATION (OUTSIDE WALL TO OUTSIDE WALL) BETWEEN A POTABLE WATER MAIN AND A RECLAIMED WATER MAIN IS ACCEPTABLE WITH PRIOR DEPARTMENT APPROVAL BEFORE THE INSALLATION OF THE POTABLE WATER MAIN. *
3. WHEN A POTABLE WATER MAIN CROSSES ANY ELECTRICAL CONDUIT(S), COMMUNICATION CONDUIT(S), AND/OR GAS MAIN, A MINIMUM OF EIGHTEEN (18) INCH VERTICAL SEPARATION IS REQUIRED BETWEEN THE BOTTOM OF THE UPPER PIPE AND THE CROWN OF THE LOWER PIPE. THE POTABLE WATER MAIN SHALL ALWAYS CROSS OVER THE OTHER UTILITY MAIN(S) UNLESS THE DEPARTMENT APPROVED OTHERWISE BEFORE THE INSTALLATION OF THE POTABLE WATER MAIN. WHEN THE POTABLE WATER MAIN IS D.I.P. AND THE GAS MAIN IS STEEL PIPE THE POTABLE WATER MAIN SHALL BE POLYWRAPPED PER DEPARTMENT STANDARDS.*
4. WASTEWATER LATERALS SHALL CROSS UNDER POTABLE WATER MAINS WITH A MINIMUM OF TWELVE (12) INCH VERTICAL SEPARATION BETWEEN THE BOTTOM OF THE UPPER PIPE AND THE CROWN OF THE LOWER PIPE. WHEN THE MINIMUM TWELVE (12) INCH VERTICAL SEPARATION CANNOT BE OBTAINED A MINIMUM SIX (6) INCH VERTICAL SEPARATION IS PERMITTED PROVIDED THAT A TWENTY (20) FOOT SECTION OF POTABLE WATER DUCTILE IRON PIPE MAIN IS CENTERED OVER THE WASTEWATER LATERAL AND THE LATERAL IS PVC C-900 PIPE. WHEN A WASTEWATER LATERAL MUST CROSS OVER A POTABLE WATER MAIN A MINIMUM TWELVE (12) INCH VERTICAL SEPARATION IS REQUIRED WITH THE LATERAL BEING PVC C-900 PIPE AND THE POTABLE WATER MAIN HAVING A TWENTY (20) FOOT SECTION OF POTABLE WATER DUCTILE IRON PIPE POTABLE WATER MAIN CENTERED ON THE CROSSING. *
5. POTABLE WATER SERVICE LINES SHALL ALWAYS CROSS OVER WASTEWATER MAINS WITH MINIMUM TWELVE (12) INCH VERTICAL SEPARATION BETWEEN THE BOTTOM OF THE UPPER PIPE AND THE CROWN OF THE LOWER PIPE. IF THE MINIMUM TWELVE (12) INCH VERTICAL SEPARATION CANNOT BE MAINTAINED THE WATER SERVICE LINE SHALL BE ENCASED IN A TEN (10) FOOT MINIMUM LONG CASING CENTERED OVER THE CROSSING WITH SIX (6) INCH MINIMUM VERTICAL SEPARATION. *
6. POTABLE WATER MAINS SHALL CROSS PERPENDICULAR TO ALL WASTEWATER MAINS, STORM SEWER MAINS, RECLAIMED WATER MAINS, AND/OR OTHER UTILITIES WHENEVER POSSIBLE. *

POTABLE WATER, WASTEWATER MAIN AND STORM SEWER CONFLICT

* 18W

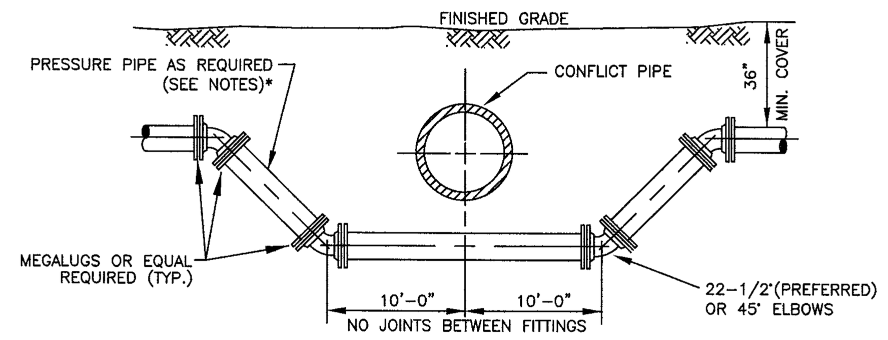

DEFLECTION BY FITTING METHOD WITH POTABLE WATER MAIN GOING UNDER OR OVER CONFLICT PIPE - SEE NOTES 1&2 *

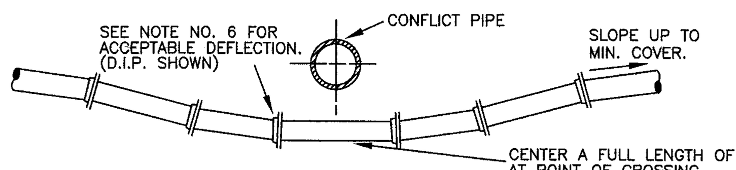

DEFLECTION BY PIPE JOINT METHOD WITH POTABLE WATER MAIN GOING UNDER OR OVER CONFLICT PIPE - SEE NOTES 1,3,&4 *

NOTES:

1. DEFLECTIONS BY FITTINGS AND/OR PIPE JOINT METHODS APPLIES TO POTABLE WATER MAIN CROSSING OVER OR UNDER CONFLICT PIPE WITH CROSSING OVER CONFLICT PIPE PREFERRED. WHEN A POTABLE WATER MAIN CROSSES OVER A STORM SEWER, GRAVITY WASTEWATER, VACUUM GRAVITY WASTEWATER, WASTEWATER FORCE MAIN, AND/OR RECLAIMED WATER MAIN THE POTABLE WATER MAIN SHALL BE LAID TO PROVIDE A MINIMUM TWELVE (12) INCH VERTICAL SEPARATION BETWEEN THE BOTTOM OF THE OF THE UPPER PIPE AND THE CROWN OF THE LOWER PIPE. WHEN THE MINIMUM TWELVE (12) INCH VERTICAL SEPARATION CANNOT BE OBTAINED, A MINIMUM SIX (6) INCH VERTICAL SEPARATION IS PERMITTED PROVIDED THAT A TWENTY (20) FOOT SECTION OF POTABLE WATER DUCTILE IRON PIPE MAIN IS CENTERED ON THE CROSSING WITH THE LOWER PIPE BEING A PRESSURE CLASS PIPE HAVING A TWENTY (20) FOOT SECTION CENTERED ON CROSSING PER DEP REGULATIONS. WHEN THE POTABLE WATER MAIN CROSSES UNDER ANY STORM SEWER, GRAVITY WASTEWATER, VACUUM GRAVITY WASTEWATER, WASTEWATER FORCE MAIN, AND/OR RECLAIMED WATER MAIN, A MINIMUM TWELVE (12) INCH VERTICAL SEPARATION IS REQUIRED WITH NO EXCEPTIONS AND ONLY WITH PRIOR DEPARTMENT APPROVAL. *
2. THE PREFERRED PIPE DEFLECTION METHOD IS BY USING MECHANICAL RESTRAINT FITTINGS. *
3. POTABLE WATER MAIN DEFLECTION BY PIPE JOINT METHOD REQUIRES DEPARTMENT APPROVAL PRIOR TO THE INSTALLATION OF THE POTABLE WATER MAIN. *
4. DEFLECTION BY PIPE JOINT SHALL NOT EXCEED SEVENTY-FIVE PERCENT (75%) OF MANUFACTURER'S RECOMMENDED MAXIMUM JOINT DEFLECTION FOR DUCTILE IRON PIPE AND PVC PIPE DEFLECTION CAN ONLY BE ALLOWED BY INSTALLING THE APPROPRIATE FITTINGS - NO EXCEPTIONS. *

POTABLE WATER MAIN / FORCE MAIN PRESSURE PIPE CONFLICT DETAIL

* 19W

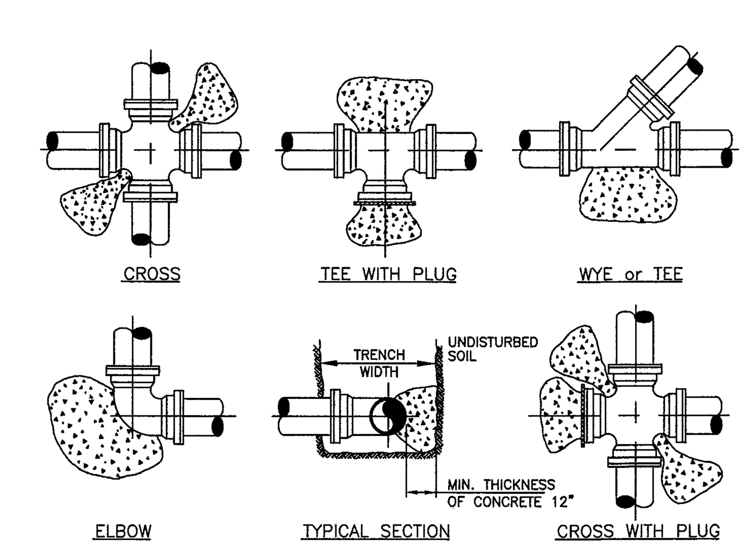

PIPE	THRUST BLOCK AREA REQ'D	REMARKS	NOTE:
4"	2.0 SQ. FT.	VALUES ARE FOR 90° BEND, BASED ON 2000 P.S.F. SAFE BEARING LOAD AND PIPE PRESSURE OF 150 P.S.I. FOR OTHER SOILS & PRESSURES THE AREA REQUIRED IS IN DIRECT PROPORTION	FOR OTHER FITTINGS USE THE FOLLOWING FACTORS. TEE 100% 45° BEND 71% 22 1/2° BEND 39% 11 1/4° BEND 20% DEAD END 100%
6"	4.0 SQ. FT.		
8"	6.6 SQ. FT.		
10"	10.0 SQ. FT.		
12"	14.0 SQ. FT.		
14"	18.6 SQ. FT.		

NOTES:

1. CONCRETE THRUST BLOCKS OR THRUST COLLARS MAY BE UTILIZED ONLY IF NECESSARY FOR CONNECTIONS TO AN EXISTING PIPING SYSTEM, OTHERWISE MECHANICAL RESTRAINTS SHALL BE USED. KEEP "T" BOLTS CLEAR OF CONCRETE, WRAPPED IN VISQUEEN FOR FUTURE ACCESS, WITH A MINIMUM OF 1' THICKNESS BETWEEN THE FITTING AND SOIL.
2. BEFORE POURING CONCRETE, PLUGS SHALL BE WRAPPED WITH VISQUEEN AND A BOARD PLACED IN FRONT.
3. CONCRETE SHALL BE 2500 P.S.I. MINIMUM.
4. THE ENGINEER OF RECORD SHALL SUBMIT A THRUST BLOCK SIZE CALCULATION FOR TEE CONNECTIONS INTO UNRESTRAINED EXISTING MAINS LARGER THAN 14".
5. THE ENGINEER OF RECORD SHALL SUBMIT A PIPE RESTRAINT DESIGN FOR INLINE EXTENSIONS OF A EXISTING UNRESTRAINED MAIN IF MECHANICAL JOINT RESTRAINT CAN NOT BE INSTALLED ON THE EXISTING MAIN.

TYPICAL THRUST BLOCKS FOR PRESSURE PIPE

20W

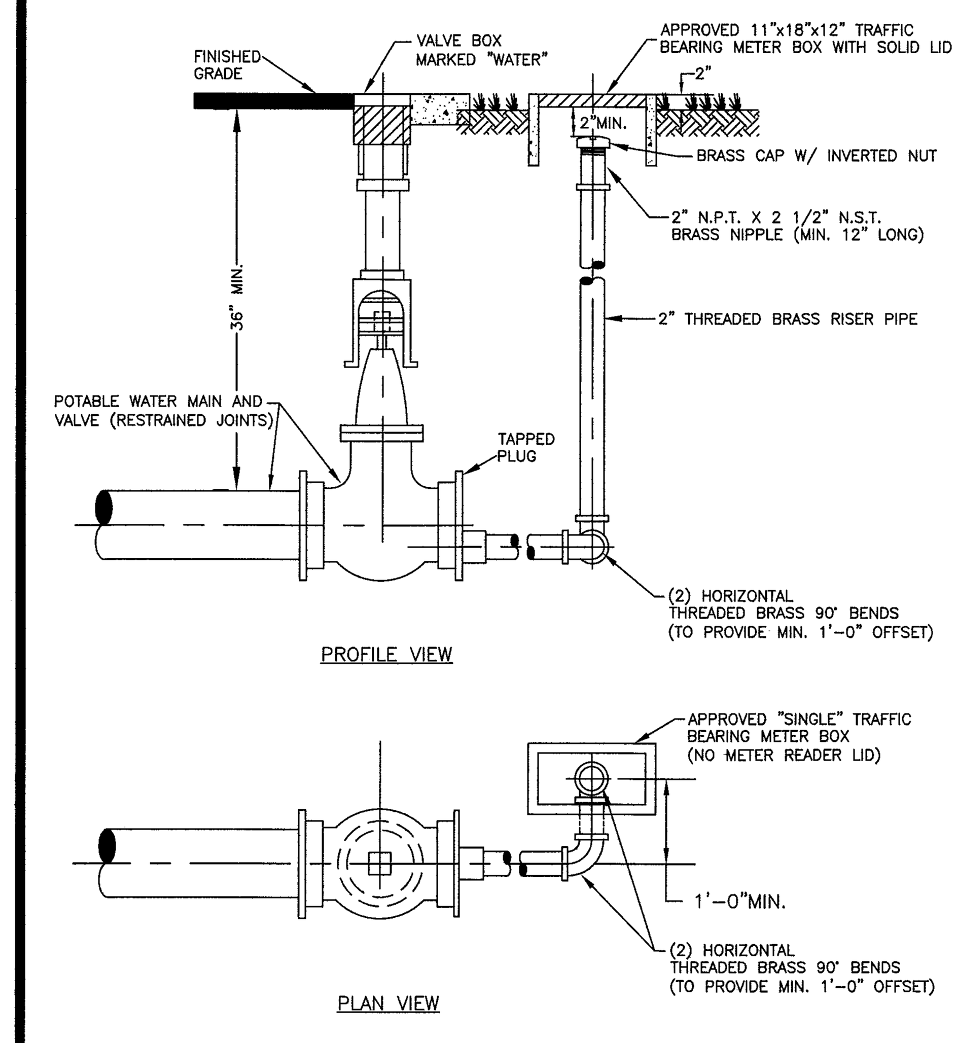

NOTES:

1. TEMPORARY DEAD END BLOWOFF ONLY ALLOWED WITH PRIOR DEPARTMENT APPROVAL.
2. BLOWOFF BOX TO BE LOCATED IN GRASS AREA, MIN. 2' FROM SIDEWALK OR PAVEMENT
3. PERMANENT DEAD ENDS REQUIRE THE INSTALLATION OF AN APPROVED AUTOMATIC FLUSHING ASSEMBLY.
4. ALL BRASS SHALL BE "LEAD FREE".

TYPICAL 2" TERMINAL BLOWOFF POTABLE WATER DISTRIBUTION MAINS

21W

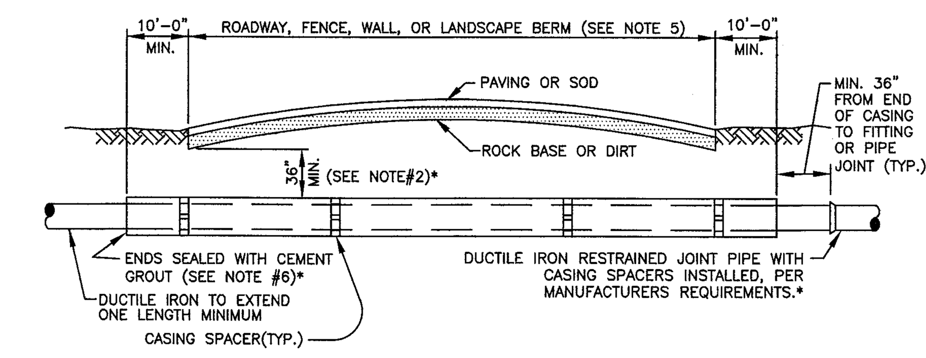

CARRIER PIPE SIZE	STEEL CASING INSIDE DIAMETER (MIN)	MINIMUM WALL THICKNESS (SEE NOTE 2)
4"	12"	.188
6"	14"	.250
8"	20"	.250
10"	20"	.250
12"	24"	.250
14"	24"	.250
16"	30"	.312
18"	30"	.312
20"	36"	.372
24"	42"	.500
30"	48"	.500
36"	54"	.625
42"	60"	.625
48"	72"	.625

NOTES:*

1. A PROFILE DRAWING TO SCALE FOR EACH JACK AND BORE, DIRECTIONAL DRILL, OR DIRECT BURIED INSTALLATION IS REQUIRED TO BE APPROVED BY THE DEPARTMENT PRIOR TO INSTALLATION. IF A SPLIT CASING IS REQUIRED SEE WUD DETAIL 22WB.*
2. THE RIGHT-OF-WAY OWNER MAY REQUIRE THICKER WALL CASING AND LARGER COVER OVER CASING.*
3. STEEL CASING SHALL BE COATED OUTSIDE WITH COAL TAR EPOXY (MIN. 16 MILS DFT) AND BE PAINTED WITH A 4" MINIMUM CONTINUOUS STRIPE, ALASKA BLUE IN COLOR, ALONG THE TOP SIDE OF THE CASING.*
4. PIPE IN CASING SHALL BE PULLED TO FULLY ENGAGE RESTRAINT.
5. STEEL CASING IS REQUIRED FOR ALL POTABLE WATER MAIN INSTALLATIONS UTILIZING JACK AND BORE OR WHEN MAINS ARE INSTALLED UNDER FENCES, WALLS, OR LANDSCAPE BERMS. WHEN A CASING IS INSTALLED UNDER A FENCE, WALL, OR BERM SEE WUD STANDARD DETAIL 48W FOR INSTALLATION REQUIREMENTS.*
6. NON-SHRINKABLE CEMENT GROUT TO BE INSTALLED TO OBTAIN WATERTIGHT SEAL AT EACH END OF CASING.*

POTABLE WATER MAIN SOLID CASING INSTALLATION DETAIL

* 22WA

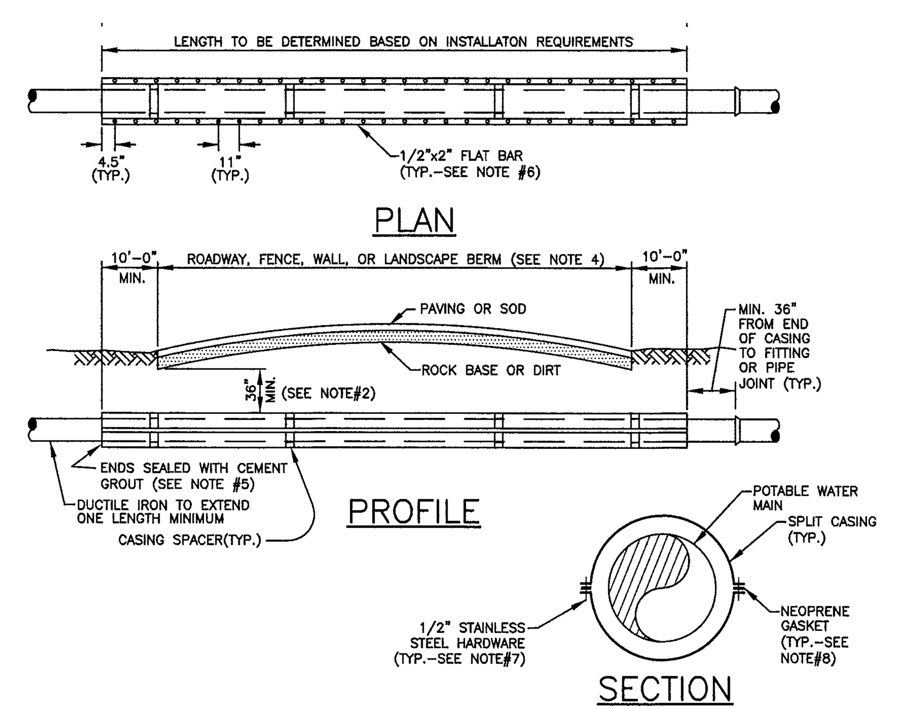

CARRIER PIPE SIZE	STEEL CASING INSIDE DIAMETER (MIN)	MINIMUM WALL THICKNESS (SEE NOTE 2)
4"	12"	.188
6"	14"	.250
8"	20"	.250
10"	20"	.250
12"	24"	.250

NOTES:

1. A SHOP DRAWING TO SCALE FOR EACH SPLIT CASING INSTALLATION IS REQUIRED AND TO BE APPROVED BY THE DEPARTMENT PRIOR TO INSTALLATION.
2. THE RIGHT-OF-WAY OWNER MAY REQUIRE THICKER WALL CASING AND LARGER COVER OVER CASING.
3. STEEL CASING SHALL BE COATED OUTSIDE WITH COAL TAR EPOXY (MIN. 16 MILS DFT) AND BE PAINTED WITH A 4" MINIMUM CONTINUOUS STRIPE, ALASKA BLUE IN COLOR, ALONG THE TOP SIDE OF THE CASING.
4. SPLIT STEEL CASING IS REQUIRED ON ALL EXISTING POTABLE WATER INSTALLATIONS WHEN A NEW STORM DRAINAGE OR OTHER UTILITY PIPE IS INSTALLED AND CANNOT ACHIEVE THE PROPER VERTICAL SEPARATION PER WUD STANDARDS ALONG WITH WHEN A NEW FENCE, WALL, OR LANDSCAPE BERM IS INSTALLED OVER AN EXISTING POTABLE WATER MAIN. WHEN A SPLIT CASING IS INSTALLED UNDER A FENCE, WALL, OR LANDSCAPE BERM SEE WUD STANDARD DETAIL 48W FOR INSTALLATION REQUIREMENTS.
5. NON-SHRINKABLE CEMENT GROUT TO BE INSTALLED TO OBTAIN WATERTIGHT SEAL AT EACH END OF CASING.
6. FLAT BARS TO BE STITCH WELDED AT 6" LENGTHS TO EDGE OF CASING ON EACH SIDE.
7. CASING TO BE ASSEMBLED IN FIELD WITH 1/2" STAINLESS STEEL BOLTS, WASHERS, AND NUTS ON EACH SIDE.
8. 1/4" NEOPRENE GASKET MATERIAL EXTENDING PAST CASING JOINT FOR POSITIVE SEAL ON EACH SIDE.

POTABLE WATER MAIN SPLIT CASING INSTALLATION DETAIL

* 22WB

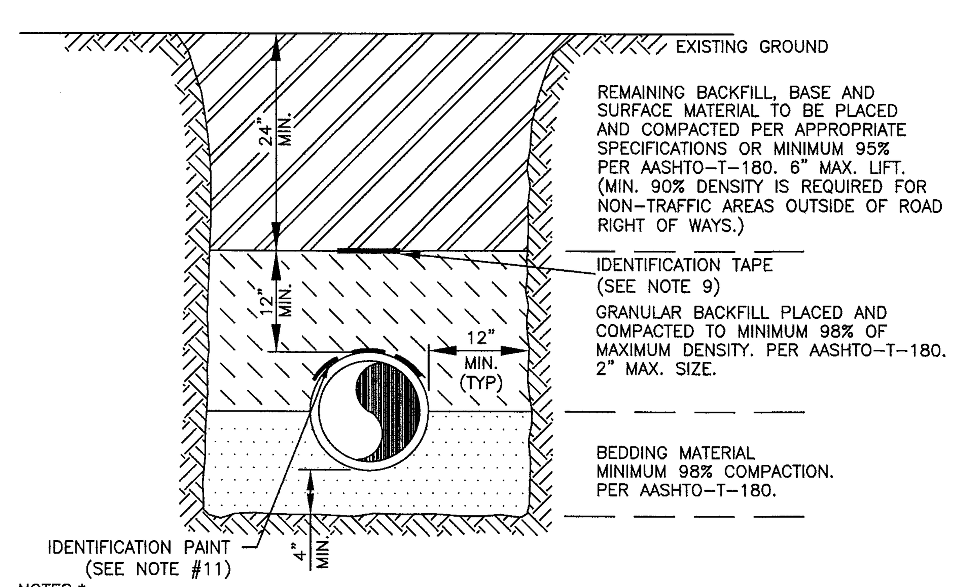

NOTES:*

1. BEDDING SHALL CONSIST OF IN-SITU GRANULAR MATERIAL OR WASHED AND GRADED LIMEROCK 3/8"- 7/8" SIZING. UNSUITABLE IN-SITU MATERIALS SUCH AS MUCK, DEBRIS AND LARGER ROCKS SHALL BE REMOVED.
2. THE PIPE SHALL BE FULLY SUPPORTED FOR ITS ENTIRE LENGTH WITH APPROPRIATE COMPACTION UNDER THE PIPE HAUNCHES.
3. THE PIPE SHALL BE PLACED IN A DRY TRENCH.
4. BACKFILL SHALL BE FREE OF UNSUITABLE MATERIAL SUCH AS LARGE ROCK, MUCK AND DEBRIS.
5. DENSITY TESTS ARE REQUIRED IN 1 FOOT LIFTS ABOVE THE PIPE AT INTERVALS OF 400' MAXIMUM, MINIMUM 1 SET OF TESTS FOR EACH WASTEWATER GRAVITY MAIN RUN, OR AS DIRECTED BY THE INSPECTOR.
6. THE DEVELOPER/CONTRACTOR SHALL BE RESPONSIBLE TO COMPLY WITH ALL TRENCH SAFETY LAWS AND REGULATIONS.
7. SEE SEPARATE DETAILS FOR "PIPE INSTALLATION UNDER EXISTING PAVEMENT - OPEN CUT."
8. THE AFFECTED AREA SHALL BE RESTORED TO EQUAL OR BETTER CONDITION OR AS SPECIFIED IN PERMIT/CONTRACT DOCUMENTS.
9. APPROVED 6" WIDE MAGNETIC TAPE IS REQUIRED ON ALL POTABLE WATER MAINS.*
10. CONTINUOUS 4" WIDE BLUE PAINT STRIPPING IS REQUIRED FOR POTABLE WATER MAIN DUCTILE IRON PIPE (D.I.P.) INSTALLED BELOW GRADE ONLY.*
11. A CONTINUOUS 4" WIDE PAINTED STRIP (BLUE) IS REQUIRED FOR ALL DIP/PCCP POTABLE WATER MAINS.*
12. POTABLE WATER MAIN INSTALLATIONS WITHIN PUBLIC ROAD RIGHT-OF-WAYS SHALL BE BY THE SPECIFICATIONS OF THE JURISDICTION GRANTING THE RIGHT-OF-WAY UTILITY PERMIT.*
13. FOR PIPE INSTALLATIONS IN ROAD RIGHTS-OF-WAY, ROAD OWNER'S PERMIT SPECIFICATIONS SHALL APPLY.

POTABLE WATER TRENCH DETAIL

* 23W

CONSTRUCTION PROCEDURES

THE BACKFILL FOR THE FIRST AND SECOND STAGES SHALL BE PLACED IN 6" LAYERS (COMPACTED THICKNESS) AND SHALL BE COMPACTED TO 100% OF MAXIMUM DENSITY AS DETERMINED BY AASHTO T-99.

STAGE 1:
THE CONTRACTOR SHALL PROVIDE ADEQUATE COMPACTED FILL BENEATH THE HAUNCHES OF THE PIPE, USING MECHANICAL TAMPS SUITABLE FOR THIS PURPOSE. THIS COMPACTION APPLIES TO THE MATERIAL PLACED BENEATH THE HAUNCHES OF THE PIPE AND ABOVE ANY BEDDING REQUIRED.

STAGE 2:
THE CONTRACTOR SHALL OBTAIN A WELL-COMPACTED BED AND FILL ALONG THE SIDES OF THE PIPE AND TO A POINT INDICATING THE TOP OF SUB-GRADE MATERIAL.

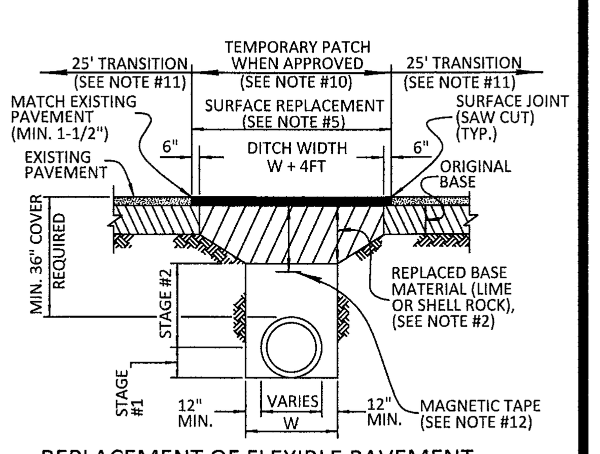

REPLACEMENT OF FLEXIBLE PAVEMENT FOR PERMITTED PAVEMENT CUT

NOTES

1) BEDDING SHALL CONSIST OF IN-SITU GRANULAR MATERIAL OR WASHED AND GRADED LIMEROCK 3/8" - 7/8" SIZING WITH EQUAL OR GREATER STRUCTURAL ADEQUACY AS EXISTING. UNSUITABLE IN-SITU MATERIALS SUCH AS MUCK, DEBRIS AND LARGER ROCKS SHALL BE REMOVED.
2) REPLACED BASE MATERIAL (PER LAND DEVELOPMENT DESIGN STANDARDS) OVER DITCH SHALL BE TWICE THE THICKNESS OF THE ORIGINAL BASE AND MATCH THE TYPE OF MATERIAL OF THE ORIGINAL BASE OR 12" MINIMUM, WHICHEVER IS GREATER.
3) ASPHALT CONCRETE PAVEMENT JOINTS SHALL BE MECHANICALLY SAWED AND BUTT-JOINTED.
4) BASE MATERIAL SHALL BE PLACED IN TWO OR THREE LAYERS (6" MAX. PER LAYER) AND EACH LAYER THOROUGHLY ROLLED OR TAMPED TO THE SPECIFIED DENSITY (MINIMUM 98% AASHTO - T-180)
5) SURFACE MATERIAL WILL BE CONSISTENT WITH THE EXISTING SURFACE OR 1-1/2" SP 12.5 STRUCTURAL COURSE (TRAFFIC LEVEL A) ASPHALTIC CONCRETE WITH RC-70 PRIME COAT AT 0.10 GAL/SQ. YD. FOR LIMEROCK BASE AND TACK COAT AT 0.05 GAL/S.Y FOLLOW THE LATEST FDOT SPECIFICATIONS FOR APPLICATION RATES OF PRIME AND TACK COATS, CONTRACTOR TO SUBMIT MATERIALS AND RATES TO ENGINEER FOR APPROVAL PRIOR TO BEGINNING WORK.
6) PIPE SHALL BE PLACED IN A DRY TRENCH.
7) ALL ROADWAY REPAIR WORK SHALL BE PERFORMED IN CONFORMANCE WITH APPLICABLE FDOT STANDARD SPECIFICATIONS FOR ROAD AND BRIDGE CONSTRUCTION AND COUNTY PPM# EL-0-3606.
8) DENSITY TESTS SHALL BE TAKEN IN 1 FT. LIFTS ABOVE THE PIPE AT INTERVALS OF 400 FT MAXIMUM (1 SET MINIMUM) OR AS DIRECTED BY THE CONSTRUCTION COORDINATION DIVISION. RESULTS SHALL BE SUBMITTED TO CONSTRUCTION COORDINATION DIVISION AS PART OF THEIR FIELD REVIEW.
9) ENGINEER-OF-RECORD SHALL PROVIDE FULL-TIME INSPECTION DURING THE ENTIRETY OF THE OPEN-CUT OPERATION, BEGINNING WITH THE EXCAVATION AND CONTINUING THROUGH THE COMPLETION OF THE PAVING.
10) IF THE PAVEMENT IS NOT COMPLETELY RESTORED IMMEDIATELY FOLLOWING THE OPEN CUT, A SMOOTH TEMPORARY PATCH (MINIMUM 1.5" SP 12.5 STRUCTURAL COURSE ASPHALT) SHALL BE INSTALLED PROPERLY MATCHING THE EXISTING GRADING OF THE ROADWAY. THE TEMPORARY PATCH SHALL BE ALLOWED TO REMAIN IN PLACE AND BE MAINTAINED FOR A PERIOD NO LONGER THAN 45 DAYS. THE COUNTY RETAINS THE RIGHT TO USE POSTED SURETY TO COMPLETE ANY RESTORATION WORK THAT HAS NOT BEEN COMPLETED IN THE 45 DAY PERIOD. ALTERNATIVE TEMPORARY TRENCH PROTECTION (STEEL PLATES OR OTHERS) MAY BE APPROVED BY THE CONSTRUCTION COORDINATION DIVISION.
11) FOR THE FINAL RESTORATION (INCLUDES THE PATCHED/SURFACE REPLACEMENT AREA OVER THE TRENCH), THE ROAD SHALL BE MILLED AND RESURFACED WITH 1-1/2" (ONE AND A HALF INCH) OF SP 12.5 STRUCTURAL COURSE (TRAFFIC LEVEL A) WITH TACK COAT AT 0.05 GAL/SY AND RC-70 PRIME COAT AT 0.10 GAL./SY. FOR A FULL LANE WIDTH ENCROACHED BY THE TRENCH INCLUDING A TRANSITION AREA OF 25 FT. EACH SIDE MEASURED FROM TOP OF TRENCH.
12) APPROVED MAGNETIC TAPE IS REQUIRED FOR ALL MAIN PRESSURE PIPES AND CONDUIT IN THE COUNTY'S RIGHT-OF-WAY. INSTALL TAPE 24" BELOW FINISHED GRADE.
13) CONTINUOUS 4" WIDE PAINT STRIPING IS REQUIRED FOR DIP/PCCP WATER MAINS (BLUE), DIP SANITARY FORCE MAINS (GREEN), DIP RECLAIMED WATER MAINS (PURPLE), GAS MAINS (YELLOW), OR AS REQUIRED BY THE APWA .

WUD ONLY UTILITY NOTE:
THE CONTINUOUS PAINTED STRIPE REFERENCED IN NOTE #13 ABOVE SHALL BE ALASKA BLUE IN COLOR PER WUD STANDARDS.

OPEN CUT PIPE INSTALLATION NON-THOROUGHFARE ROAD

* 24W

CONSTRUCTION PROCEDURES

THE BACKFILL FOR THE FIRST AND SECOND STAGES SHALL BE PLACED IN 6" LAYERS (COMPACTED THICKNESS) AND SHALL BE COMPACTED TO 100% OF MAXIMUM DENSITY AS DETERMINED BY AASHTO T-99.

STAGE 1:

THE CONTRACTOR SHALL PROVIDE ADEQUATE COMPACTED FILL BENEATH THE HAUNCHES OF THE PIPE, USING MECHANICAL TAMPS SUITABLE FOR THIS PURPOSE. THIS COMPACTION APPLIES TO THE MATERIAL PLACED BENEATH THE HAUNCHES OF THE PIPE AND ABOVE ANY BEDDING REQUIRED.

STAGE 2:

THE CONTRACTOR SHALL OBTAIN A WELL-COMPACTED BED AND FILL ALONG THE SIDES OF THE PIPE AND TO A POINT INDICATING THE TOP OF SUB-GRADE MATERIAL.

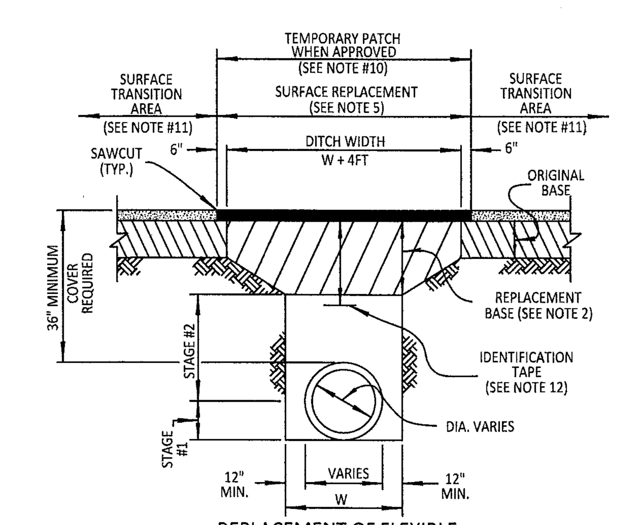

REPLACEMENT OF FLEXIBLE PAVEMENT FOR PERMITTED PAVEMENT CUT

NOTES

1) BEDDING SHALL CONSIST OF IN-SITU GRANULAR MATERIAL OR WASHED AND GRADED LIMEROCK 3/8" - 7/8" SIZING WITH EQUAL OR GREATER STRUCTURAL ADEQUACY AS EXISTING. UNSUITABLE IN-SITU MATERIALS SUCH AS MUCK, DEBRIS AND LARGER ROCKS SHALL BE REMOVED.
2) REPLACED BASE MATERIAL OVER DITCH SHALL BE 16" LIMEROCK (LBR100) MINIMUM FOR THOROUGHFARE PLAN ROADS. ANY ALTERNATE BASE MATERIAL REQUESTED BY THE ENGINEER OF RECORD REQUIRES APPROVAL BY THE ROADWAY PRODUCTION DIVISION.
3) ASPHALT CONCRETE PAVEMENT JOINTS SHALL BE MECHANICALLY SAWED AND BUTT-JOINTED.
4) BASE MATERIAL (PER ROADWAY PRODUCTION DESIGN STANDARDS) SHALL BE PLACED IN TWO OR THREE LAYERS (6" MAX. PER LAYER) AND EACH LAYER THOROUGHLY ROLLED OR TAMPED TO THE SPECIFIED DENSITY. (MINIMUM 98% AASHTO-T-180).
5) 1" FRICTION COURSE FC-9.5 OVER 1-1/2" TYPE SP STRUCTURAL COURSE (TRAFFIC LEVEL C) WITH TACK COAT AT 0.05 GAL/SY AND RC-70 PRIME COAT AT 0.10 GAL/SY FOR LIMEROCK BASE. FOLLOW THE LATEST FDOT SPECIFICATIONS FOR APPLICATION RATES OF PRIME AND TACK COATS. CONTRACTOR TO SUBMIT MATERIALS AND RATES TO ENGINEER FOR APPROVAL PRIOR TO BEGINNING WORK.
6) PIPE SHALL BE PLACED IN A DRY TRENCH.
7) ALL ROADWAY REPAIR WORK SHALL BE PERFORMED IN CONFORMANCE WITH APPLICABLE FDOT STANDARD SPECIFICATIONS FOR ROAD AND BRIDGE CONSTRUCTION AND COUNTY PPM# EL-0-3605.
8) DENSITY TESTS SHALL BE TAKEN IN 1 FT LIFTS ABOVE THE PIPE AT INTERVALS OF 400 FT MAXIMUM (1 SET MINIMUM) OR AS DIRECTED BY THE CONSTRUCTION COORDINATION DIVISION. RESULTS SHALL BE SUBMITTED TO CONSTRUCTION COORDINATION DIVISION AS PART OF THEIR FIELD REVIEW.
9) ENGINEER-OF-RECORD SHALL PROVIDE FULL-TIME INSPECTION DURING THE ENTIRETY OF THE OPEN-CUT OPERATION, BEGINNING WITH THE EXCAVATION AND CONTINUING THROUGH THE COMPLETION OF THE PAVING.
10) IF THE PAVEMENT IS NOT COMPLETELY RESTORED IMMEDIATELY FOLLOWING THE OPEN CUT, A SMOOTH TEMPORARY PATCH (MINIMUM 2.5" SP 12.5 STRUCTURAL COURSE ASPHALT) SHALL BE INSTALLED, PROPERLY MATCHING THE EXISTING GRADING OF THE ROADWAY. THE TEMPORARY PATCH SHALL BE ALLOWED TO REMAIN IN PLACE AND BE MAINTAINED FOR A PERIOD NO LONGER THAN 45 DAYS. THE COUNTY RETAINS THE RIGHT TO USE POSTED SURETY TO COMPLETE ANY RESTORATION WORK THAT HAS NOT BEEN COMPLETED IN THE 45 DAY PERIOD. ALTERNATIVE TEMPORARY TRENCH PROTECTION (STEEL PLATES OR OTHERS) MAY BE APPROVED BY THE CONSTRUCTION COORDINATION DIVISION.
11) FOR FINAL RESTORATION (INCLUDES THE PATCHED/SURFACE REPLACEMENT AREA OVER THE TRENCH). THE ROAD SHALL BE MILLED 1" MILLING DEPTH/ RESURFACED PER NOTE 5 ABOVE FOR A FULL LANE WIDTH OF THE TRAVEL LANES ENCROACHED BY THE TRENCH AREA, INCLUDING A TRANSITION AREA OF 50 FT. ON EACH SIDE MEASURED FROM TOP OF TRENCH.
12) APPROVED MAGNETIC TAPE IS REQUIRED FOR ALL MAIN PRESSURE PIPES AND CONDUIT IN THE COUNTY'S RIGHT-OF-WAY. INSTALL TAPE 24" BELOW FINISHED GRADE.
13) CONTINUOUS 4" WIDE PAINT STRIPING IS REQUIRED FOR DIP/PCCP WATER MAINS (BLUE), SANITARY MAINS (GREEN),DIP RECLAIMED WATER MAINS (PURPLE), GAS MAINS (YELLOW), OR AS REQUIRED BY THE APWA.

WUD ONLY UTILITY NOTE:
THE CONTINUOUS PAINTED STRIPE REFERENCED IN NOTE #13 ABOVE SHALL BE ALASKA BLUE IN COLOR PER WUD STANDARDS.

OPEN CUT PIPE INSTALLATION THOROUGHFARE ROAD

* 25W

THIS SPACE INTENTIONALLY LEFT BLANK

WUD PROJECT No.
24-567

13980 89th Pl N
West Palm Beach, FL 33412

PALM BEACH COUNTY WATER UTILITIES DEPARTMENT
P.O. BOX 16097
WEST PALM BEACH, FL 33416
(561)493-6000

NO.	DATE	REVISION / REMARKS	BY
	JUNE 2019	GENERAL REVISION	J.L.
*	JAN 2023	GENERAL REVISION	J.L.

STD DETAILS

SHEET NUMBER 6 OF 9

POTABLE WATER #3
STANDARD DETAILS

CONSULTANT:

IT'S THE LAW !
CALL 48 HOURS BEFORE YOU DIG
1-800-432-4770
SUNSHINE STATE ONE CALL OF FLORIDA, INC.
UTILITIES NOTIFICATION CENTER

DESIGNED BY: WUD
DRAWN BY: M. BUCKNER
CHECKED BY: J. LAMMERT
APPROVED BY: WUD

Palm Beach County
Water Utilities Department
P.O.Box 16097
West Palm Beach, FL 33416-6097

SEAL

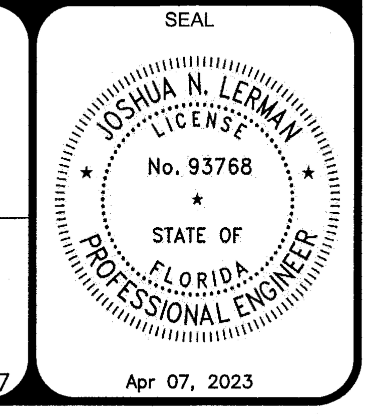

Apr 07, 2023

Drawing: W:_WUD 2023 STD DTL REVS\WUD 2023 STD DTL SHEETS\WUD 2023 STD DTLS - POTABLE WATER (6 SHTS).dwg\WUD PWS-3 - Last Modified: Fri, Apr 07, 2023 - 7:53am

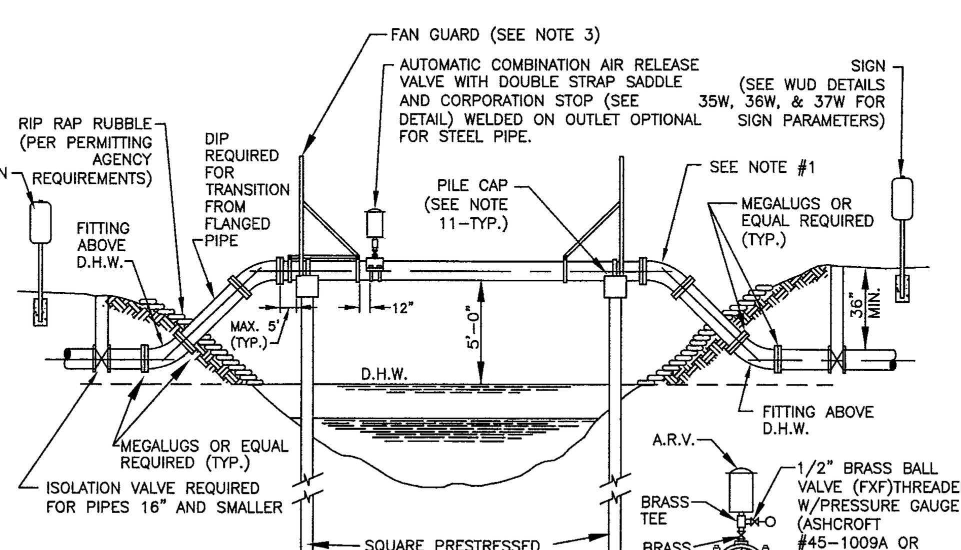

NOTES:

1. ALL EXPOSED PIPE SHALL BE DUCTILE IRON OR PREFABRICATED STEEL WITH FLANGED FITTINGS AND PROFILED GASKETS. RETAINER GLANDS AND UNIFLANGE TYPE FITTINGS ARE NOT TO BE SUBSTITUTED FOR FLANGED FITTINGS. PREFABRICATED STEEL PIPE MAY INCORPORATE WELDED ON LONG RADIUS UPPER BENDS. PREFABRICATED FLANGED PIPE SHALL BE FACTORY TESTED.
2. SPAN LENGTHS AS REQUIRED BY PERMITTING AGENCY
3. FAN GUARDS ARE REQUIRED. SEE FAN GUARD/PILE CAP DESIGN DETAIL 27W FOR ADDITIONAL REQUIREMENTS. ACCESS PLATFORM AND GATE REQUIRED ON ARV SIDE ONLY.
4. ALL STEEL PIPE SHALL HAVE WELDED ON BEARING PADS EXTENDED 1" MINIMUM BEYOND PIPE CRADLE WITH PAD INSTALLED PRIOR TO PAINTING. ALL EXPOSED STEEL PIPING SHALL BE PAINTED AS SPECIFIED IN THE APPROVED MATERIALS LIST WITH ALL HARDWARE BEING PAINTED WITH COAL–TAR EPOXY.
5. PIPE SHALL BE CRADLED ON ½" THICK NEOPRENE.(DUROMETER GRADE 50,) CURRENT FDOT STANDARDS APPLY. NEOPRENE IS REQUIRED AT ALL STRAPS INSTALLED OVER STEEL PIPE. NEOPRENE SHALL EXTEND MIN. 1" BEYOND THE EDGES OF CRADLE AND STRAPS.
6. TIE–DOWN STRAPS MUST PROPERLY FIT AND SECURE PIPE IN CRADLE.
7. PIPE CRADLE IN CAP SHALL CONTACT ⅓ CIRCUMFERENCE OF PIPE. (SEE FAN GUARD DETAIL 27W)
8. SHOW EXISTING CANAL CROSS SECTION ULTIMATE CANAL SECTION AND RELEVANT ELEVATIONS AND DISTANCES ON A TO SCALE DETAIL DRAWING.
9. PILE LIFT CABLE SHALL BE REMOVED BELOW SURFACE; HOLE SHALL BE FILLED WITH EPOXY CEMENT.
10. THREADED AREAS OF BRASS FITTINGS SHALL BE SPIRAL WRAPPED WITH TWO WRAPS OF TEFLON TAPE.
11. THE PILES AND CAP DESIGN TO BE ON DETAILED SHOP DRAWINGS. THE REQUIRED PILES SHALL BE 14"x14" MIN. – TYPE 1A PER FLORIDA DOT INDEX PILES. PILE PENETRATION BELOW CANAL BOTTOM SHALL BE 15' MINIMUM WITH EACH PILE LOAD CAPACITY BEING 20 TONS MINIMUM (FDOT STANDARDS APPLY). ALL REQUIRED AERIAL CROSSING SHOP DRAWINGS SHALL BE TO SCALE AND SIGNED AND SEALED BY A STRUCTURAL ENGINEER.
12. THE AERIAL CROSSING STRUCTURAL ENGINEER OF RECORD SHALL PROVIDE IN WRITING A SIGNED AND SEALED LETTER CERTIFYING THE AERIAL CROSSING INSTALLATION WAS COMPLETED PER HIS/HER DESIGN AND ALL APPLICABLE STANDARDS AND PERMITS.

POTABLE WATER MAIN TYPICAL AERIAL CANAL CROSSING – SINGLE PIPE (SINGLE PILES) * 26W

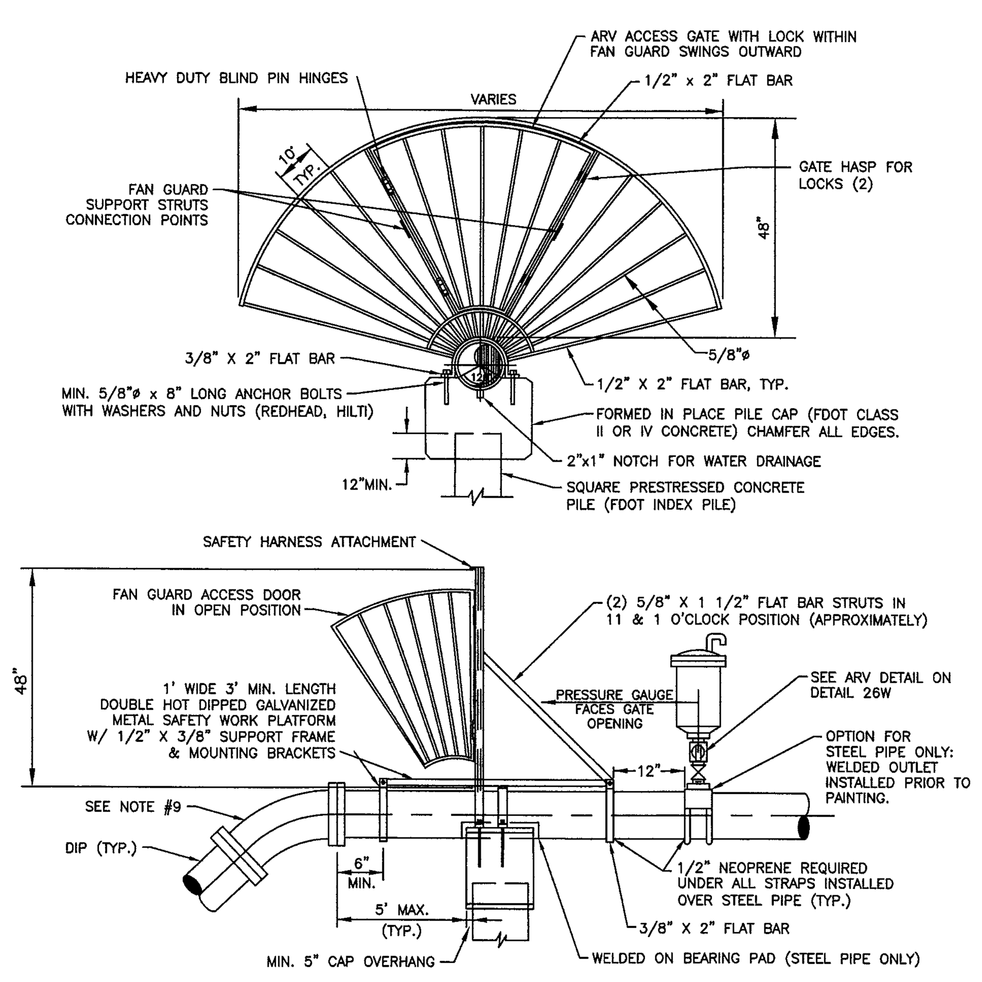

NOTES:

1. FAN GUARDS SHALL BE PLACED AT EACH END OF CANAL CROSSING.
2. FANGUARD WITH HARDWARE SHALL BE FABRICATED FROM DOUBLE HOT DIPPED GALVANIZED STEEL.
3. SHOP DRAWINGS FOR FANGUARDS, CAPS, AND PILES MUST BE SUBMITTED TO PBCWUD FOR REVIEW AND APPROVAL PRIOR TO PRE–CONSTRUCTION MEETING.
4. REINFORCING STEEL SHALL CONFORM TO ASTM A–615, GRADE 60. MIN. 2" CONCRETE COVER OVER ALL STEEL.
5. NO WELDING OF REBAR TO REBAR OR REBAR TO PILE STRANDS SHALL BE ALLOWED.
6. LONG RADIUS WELDED ON UPPER BENDS ARE ACCEPTABLE FOR STEEL PIPE.
7. THE PILE/CAP STEEL CONNECTION SHALL BE WITH A MINIMUM OF 4–#8 REINFORCEMENT BARS. THE BARS SHALL BE DRILLED AND DOWLED (EPOXIED) A MINIMUM OF 14" IN DEPTH INTO THE PILE AND TIED TO THE CAP STEEL.
8. ACCESS PLATFORM AND GATE REQUIRED ON ARV SIDE ONLY.
9. SEE TYPICAL AERIAL CROSSING DETAIL 26W FOR ADDITIONAL REQUIREMENTS.

FAN GUARD/ PILE CAP DESIGN SINGLE PIPE (SINGLE PILES) * 27W

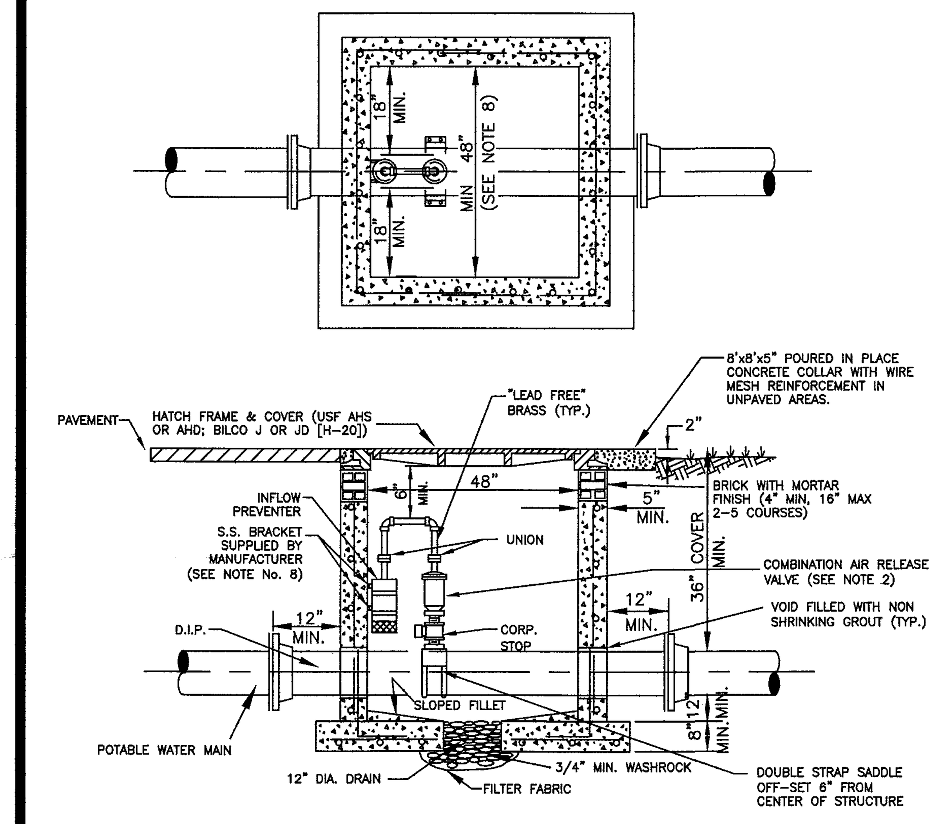

NOTES:

1. PRECAST 4000 P.S.I. TYPE II CONCRETE STRUCTURE. SHOP DRAWING IS REQUIRED TO BE APPROVED BY THE DEPARTMENT PRIOR TO VAULT CONSTRUCTION AND/OR INSTALLATION.
2. COMBINATION AIR RELEASE VALVE (ARV) SHALL BE TYPE AND SIZE APPROPRIATE FOR SERVICE INTENDED ALTHOUGH A 1" MINIMUM SIZED ARV IS REQUIRED ON POTABLE WATER MAIN INSTALLATIONS.
3. ALL OPENINGS SHALL BE SEALED WITH WATERPROOF NON–SHRINKING GROUT.
4. ALTERNATE VAULT AND COVER DESIGN MAY BE USED PROVIDED ALTERNATE VAULT AND/OR COVER SHOP DRAWINGS WERE SUBMITTED AND APPROVED BY THE DEPARTMENT PRIOR TO THE VAULT AND/OR COVER BEING INSTALLED.
5. DUCTILE IRON PIPE IS REQUIRED THROUGH THE VAULT. NO PIPE JOINTS INSIDE OR WITHIN 12" OF THE VAULT.
6. THREADED AREAS OF BRASS FITTINGS SHALL BE SPIRAL WRAPPED WITH TWO WRAPS OF TEFLON TAPE.
7. LARGER VAULTS WILL BE REQUIRED FOR PIPES LARGER THAN 12"

PIPE SIZE	MIN. VAULT SIZE
16"–24"	4'X5'
30"–42"	4'X6'

8. SHOP DRAWINGS ARE REQUIRED FOR CUSTOM MADE BRACKETS

POTABLE WATER MAIN UNDERGROUND AIR RELEASE VALVE AND VAULT IN NON–TRAFFIC AREAS OUTSIDE OF ROAD R/W 28W

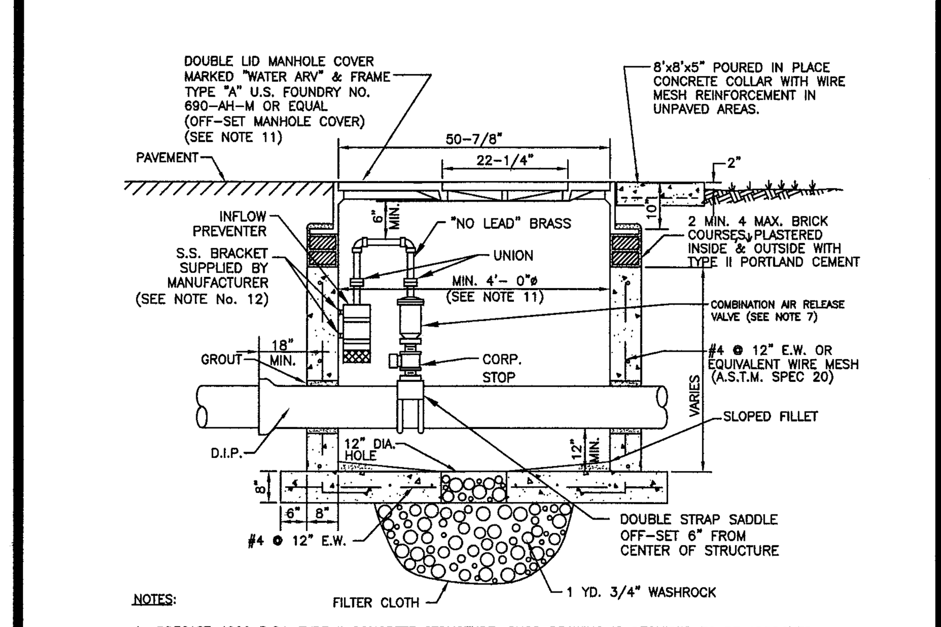

NOTES:

1. PRECAST 4000 P.S.I. TYPE II CONCRETE STRUCTURE. SHOP DRAWING IS REQUIRED TO BE APPROVED BY THE DEPARTMENT PRIOR TO VAULT CONSTRUCTION AND/OR INSTALLATION.
2. ALL OPENINGS SHALL BE SEALED WITH A WATERPROOF NON–SHRINKING GROUT.
3. LIFT HOLES ARE PERMITTED.
4. ALL PIPE HOLES SHALL BE PRECAST.
5. MANHOLE FABRICATION SHALL BE IN ACCORDANCE WITH A.S.T.M. C–478 LATEST STANDARD.
6. CONCRETE COLLAR REQUIRED WHEN MANHOLE IS OUTSIDE OF PAVEMENT, SEE DETAIL.
7. COMBINATION AIR RELEASE VALVE (ARV) SHALL BE TYPE AND SIZE APPROPRIATE FOR SERVICE INTENDED ALTHOUGH A 1" MINIMUM SIZED ARV IS REQUIRED ON POTABLE WATER MAIN INSTALLATIONS.
8. DUCTILE IRON PIPE IS REQUIRED THROUGH THE VAULT. NO PIPE JOINTS INSIDE OR WITHIN 18" OF THE MANHOLE.
9. THREADED AREAS OF BRASS FITTINGS SHALL BE SPIRAL WRAP WITH TWO WRAPS OF TEFLON TAPE.
10. POTABLE WATER MAINS 12" AND SMALLER, AN ALTERNATE VAULT AND COVER DESIGN MAY BE USED PROVIDED ALTERNATE VAULT AND/OR COVER SHOP DRAWINGS WERE SUBMITTED AND APPROVED BY THE DEPARTMENT PRIOR TO THE VAULT AND/OR COVER BEING INSTALLED.
11. LARGER MANHOLES WILL BE REQUIRED FOR PIPES LARGER THAN 12"

PIPE SIZE	MIN. MANHOLE DIAMETER
16"–24"	60"
30"–42"	72"

12. SHOP DRAWINGS ARE REQUIRED FOR CUSTOM MADE BRACKETS
13. MANHOLES IN ROADWAYS SHALL BE LOCATED OUTSIDE OF WHEEL PATHS.

POTABLE WATER MAIN AIR RELEASE MANHOLE IN PAVED AREAS AND ROAD R/W 29W

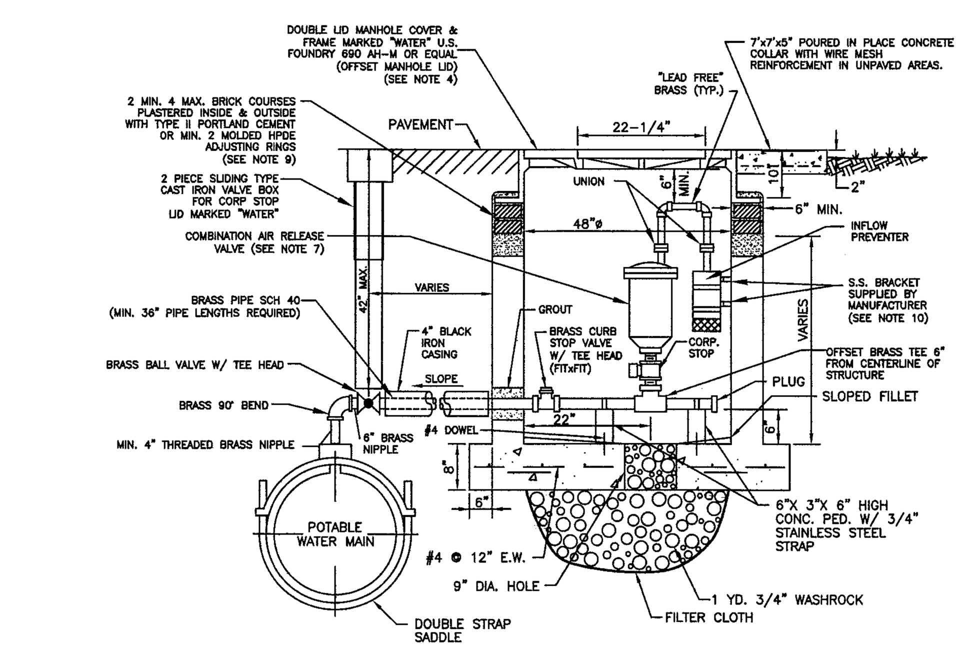

NOTES:

1. PRECAST MONOLITHIC POURED 4000 P.S.I. TYPE II CONCRETE STRUCTURE. SHOP DRAWING IS REQUIRED TO BE APPROVED BY THE DEPARTMENT PRIOR TO VAULT CONSTRUCTION AND/OR INSTALLATION.
2. ALL OPENINGS SHALL BE SEALED WITH A WATERPROOF NON–SHRINKING GROUT.
3. ALL PIPE HOLES SHALL BE PRECAST.
4. ALTERNATIVE VAULT DESIGN MAY BE USED WITH AN APPROVED 32" DIAMETER HINGED MANHOLE COVER PROVIDED ALTERNATE VAULT AND/OR COVER SHOP DRAWING WAS SUBMITTED AND APPROVED BY THE DEPARTMENT PRIOR TO THE VAULT AND/OR COVER BEING INSTALLED.
5. ARV, TAP AND PIPING TO BE TYPE AND SIZE APPROPRIATE FOR SERVICE INTENDED.
6. COMBINATION AIR RELEASE VALVE (ARV) SHALL BE TYPE AND SIZE APPROPRIATE FOR SERVICE INTENDED ALTHOUGH A 1" MINIMUM SIZED ARV IS REQUIRED ON POTABLE WATER MAIN INSTALLATIONS.
7. SHOP DRAWING IS REQUIRED FOR REVIEW AND APPROVAL.
8. THREADED AREAS OF BRASS FITTINGS AND OTHER FITTINGS SHALL BE SPIRAL WRAPPED WITH TWO WRAPS OF TEFLON TAPE.
9. IN LIEU OF BRICK WORK, APPROVED PRECAST CONCRETE ADJUSTING RINGS MAY BE USED. INSTALLATION SHALL FOLLOW MANUFACTURERS RECOMMENDATIONS.
10. SHOP DRAWINGS ARE REQUIRED FOR CUSTOM MADE BRACKETS
11. PIPE AND FITTINGS SHALL BE NO LEAD BRASS.
12. MANHOLES SHALL BE INSTALLED OUTSIDE TRAFFIC AREAS.

POTABLE WATER MAIN OFF–SET UNDERGROUND AIR RELEASE VALVE 30W

MAXIMUM QUANTITY OF WATER (GALLONS PER HOUR) THAT MAY BE SUPPLIED TO MAINTAIN PRESSURE WITHIN 5 P.S.I. OF THE SPECIFIED TEST PRESSURE

(MECHANICAL OR PUSH–ON JOINT, 18 FT. NOMINAL LENGTHS, PER 1000 FT. OF PIPE)

AVG. TEST PRESSURE PSI	PIPE DIAMETER (INCHES) 2	3	4	6	8	10	12	14	16	18	20	24	30	36	42	48
150	0.10	0.14	0.18	0.27	0.37	0.46	0.55	0.64	0.73	0.83	0.92	1.10	1.38	1.65	1.93	2.20
200	0.10	0.15	0.21	0.31	0.42	0.53	0.63	0.74	0.84	0.95	1.06	1.27	1.59	1.91	2.22	2.54

FORMULA BASIS: $L = \frac{(S) \times (D) \times (P)^{1/2}}{148{,}000} \times 1/2$

L = MAXIMUM QUANTITY OF WATER TO BE ADDED (GALLONS PER HOUR)
S = LENGTH OF PIPE TESTED (FEET)
D = DIAMETER OF PIPE (INCHES)
P = TEST PRESSURE (P.S.I.)

NOTES:

1. TO OBTAIN THE MAXIMUM QUANTITY OF WATER FOR PIPE WITH 20 FT. NOMINAL LENGTHS, MULTIPLY THE QUANTITY CALCULATED FROM THE TABLE BY 0.9
2. THE MAXIMUM QUANTITY OF ADDED WATER FOR A PIPELINE IS CALCULATED BY MULTIPLYING THE QUANTITY PER HOUR AS OBTAINED FROM THE ABOVE TABLE, BY THE DURATION OF THE TEST IN HOURS,AND BY THE TOTAL LENGTH OF THE LINE BEING TESTED DIVIDED BY 1,000. IF THE LINE UNDER TEST CONTAINS SECTIONS OF VARIOUS DIAMETERS, THE MAXIMUM QUANTITY ADDED WILL BE THE SUM OF THE COMPUTED QUANTITIES FOR EACH SIZE.
3. MAXIMUM TEST LENGTH = 2,500 FEET PER SECTION.
4. THIS STANDARD SHALL REFLECT ANY REVISION OF A.W.W.A. C–600. HOWEVER, THE MAXIMUM QUANTITY OF WATER ADDED SHALL NOT EXCEED 50% OF THE RECOMMENDED LIMIT PER APPLICABLE AWWA C–600 STANDARD.
5. STANDARD TEST PRESSURE = 150 P.S.I.; 200 P.S.I. FOR MAINS LARGER THAN 24"
6. PRESSURE TEST DURATION TO BE MIN. 2 HOURS.

POTABLE WATER MAIN PRESSURE TEST CRITERIA 31W

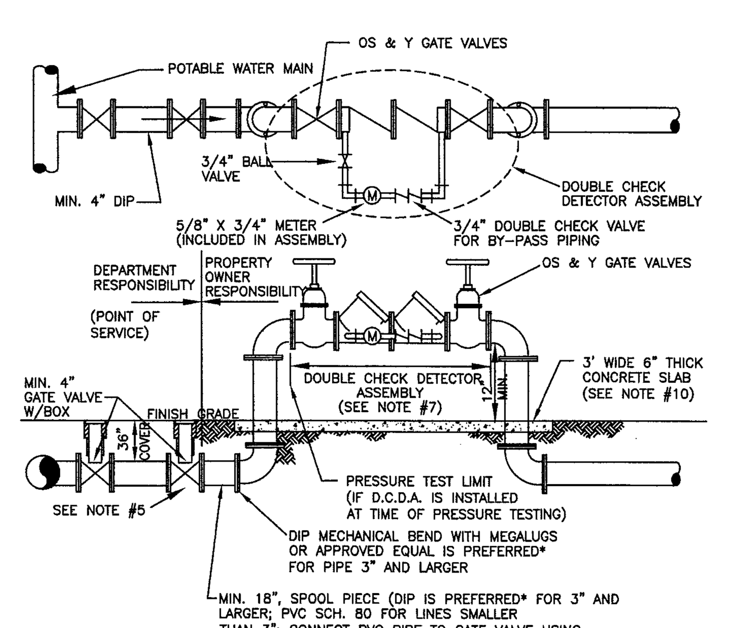

NOTES:

1. ALL PIPE AND FITTINGS UP TO THE BACKFLOW PREVENTION ASSEMBLY (I.E. D.C.D.A.) POINT OF SERVICE VALVE SHALL BE DUCTILE IRON PER WUD STANDARDS.*
2. THE INITIAL TEST OF THE BACKFLOW PREVENTION ASSEMBLY SHALL BE PERFORMED BY THE DEPARTMENT PRIOR TO SERVICE ACTIVATION.
3. THE DOUBLE CHECK DETECTOR ASSEMBLY SHALL BE APPROVED BY THE UNIVERSITY OF SOUTHERN CALIFORNIA (U.S.C.) OR THE A.S.S.E. (WITH ONE YEAR FIELD TESTING).
4. THE PROPERTY OWNER SHALL BE RESPONSIBLE FOR THE PROPER OPERATION, MAINT–ENANCE AND SUBSQUENT TESTING OF THE DOUBLE CHECK DETECTOR ASSEMBLY BY A CERTIFIED BACKFLOW TECHNICIAN.
5. WHEN FIRE LINE LENGTH IS OVER ONE PIPE LENGTH, LINE SHALL BE TERMINATED WITH A GATE VALVE (=POINT OF SERVICE). NO PIPE JOINTS / CONNECTIONS ARE PERMITTED BETWEEN POINT OF SERVICE AND VERTICAL 90° BEND
6. THE DESIGN SHALL MINIMIZE ANY POTENTIAL FOR WATER MAIN WITH NO FLOW. A FIRE HYDRANT LOCATED NEAR THE DOUBLE CHECK DETECTOR ASSEMBLY MAY BE REQUIRED FOR LONG, DEAD ENDING DEDICATED FIRE LINES.
7. AN APPROVED REDUCED PRESSURE PRINCIPLE DETECTOR ASSEMBLY SHALL BE REQUIRED FOR ALL FIRE SYSTEMS WITH STORAGE TANKS AND/OR AUXILIARY WATER SUPPLY.
8. TAMPER SWITCHES MAY BE REQUIRED BY THE FIRE MARSHAL.*
9. PIPE MATERIAL ON THE CUSTOMER SIDE OF POINT OF SERVICE VALVE SHALL COMPLY WITH FIRE MARSHAL REQUIREMENTS.*
10. 3' WIDE 6" THICK CONCRETE SLAB IS RECOMMENDED FOR ASSEMBLY SMALLER THAN 4".

DOUBLE CHECK DETECTOR ASSEMBLY * 32W

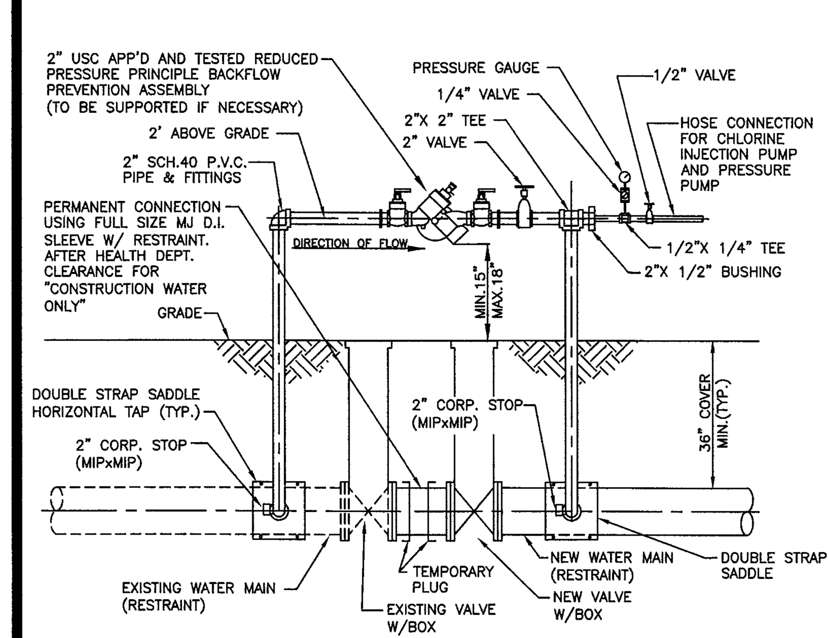

1. ENSURE PROPER RESTRAINT OF EXISTING VALVE AND EXISTING PIPE PRIOR TO NEW PIPE CONNECTION.
2. ENSURE PROPER OPERATION OF EXISTING VALVE.
3. INSTALL BY–PASS PIPING AS SHOWN. A NEARBY HYDRANT OR SERVICE TAP MAY BE USED AS A WATER SOURCE.
4. USING BY–PASS AND CHLORINE INJECTOR PUMP, DISINFECT NEW WATER MAIN (MIN. 50 CHLORINE PPM IS REQUIRED FOR DISINFECTION).
5. COMPLETE FILLING OF THE NEW WATER MAIN AND PERFORM BACTERIOLOGICAL TESTING.
6. REMOVE EXISTING BLOW OFF (IF APPLICABLE) AND EXISTING PLUG., CONNECT NEW MAIN TO EXISTING VALVE.
7. CRACK OPEN EXISTING VALVE AFTER INITIAL DISINFECTION AND FLUSH THE NEW WATER MAIN (PBCWUD PRESENCE IS REQUIRED).
8. REMOVE BY–PASS PIPING. CAP CORPORATION STOPS WITH BRASS CAPS.
9. PRESSURE TESTING IS REQUIRED AFTER SUCCESSFUL COMPLETION OF BACTERIOLOGICAL TESTING AND HEALTH DEPARTMENT RELEASE FOR "CONSTRUCTION WATER"(IF APPLICABLE). PRESSURE TEST TO BE PERFORMED AFTER BACKFILL/ ROAD BASE AND ROAD ROCK BASE INSTALLATION/ COMPACTION.
10. AN ALTERNATIVE TIE–IN PROCEDURE (PRESSURE TESTING PRIOR TO BACTERIOLOGICAL TESTING) MAY BE CONSIDERED WITH PRIOR APPROVAL (SEE SEPARATE DETAIL).
11. RECORD DRAWINGS TO SHOW DATA FOR ALL TEST TAPS.
12. ALL BRASS SHALL BE "LEAD FREE".

STANDARD POTABLE WATER MAIN TIE–IN 33W

MIN. LENGTH OF PIPE (FEET) TO BE RESTRAINED
(SOURCES: EBAA IRON RESTRAINT LENGTH CALCULATION PROGRAM FOR PVC PIPE, RELEASE 3.1, AND DIPRA THRUST RESTRAINT FOR DUCTILE IRON PIPE, RELEASE 3.2)

FITTING TYPE		PIPE SIZE 4"	6"	8"	10"	12"	16"	20"	24"	200psi 30"	36"	42"	48"
90° HORIZ. BEND		14	20	25	30	35	45	54	62	98	112	124	135
45° HORIZ. BEND		6	8	11	13	15	19	22	26	41	46	51	56
22.5° HORIZ. BEND		3	4	5	6	7	9	11	12	19	22	25	27
11.25° HORIZ. BEND		1	2	3	3	4	4	5	6	10	11	12	13
90° VERT. OFFSET	UPPER BEND	29	41	53	64	74	95	115	134	214	246	276	304
	LOWER BEND	7	10	13	16	19	25	30	35	57	66	74	83
45° VERT. OFFSET	UPPER BEND	12	19	24	29	34	39	48	56	89	102	114	126
	LOWER BEND	3	4	6	7	8	10	12	15	23	27	31	34
22.5° VERT. OFFSET	UPPER BEND	6	9	12	14	17	19	23	27	43	49	55	60
	LOWER BEND	1	2	4	4	4	5	6	7	11	13	15	16
11.25° VERT. OFFSET	UPPER BEND	3	4	6	7	8	9	11	13	21	24	27	30
	LOWER BEND	1	1	1	2	2	2	3	3	6	6	7	8
PLUG (DEAD END)		32	45	59	70	83	107	129	151	214	246	276	304
IN–LINE VALVE		32	45	45	45	45	55	65	80	110	125	140	155
TEE (BRANCH RESTRAINT)	4"X ø	23	–	–	–	–	–	–	–	–	–	–	–
	6"X ø	21	35	–	–	–	–	–	–	–	–	–	–
	8"X ø	18	34	47	–	–	–	–	–	–	–	–	–
	10"X ø	16	32	46	58	–	–	–	–	–	–	–	–
	12"X ø	13	30	44	57	69	–	–	–	–	–	–	–
	16"X ø	7	26	41	55	67	90	–	–	–	–	–	–
	20"X ø	1	21	38	52	65	88	109	–	–	–	–	–
	24"X ø	1	16	34	49	62	86	108	129	–	–	–	–
	30"X ø	1	8	28	44	58	83	106	127	208	–	–	–
	36"X ø	1	1	22	39	54	80	103	124	206	240	–	–
	42"X ø	1	1	15	33	49	77	100	122	205	239	270	–
	48"X ø	1	1	7	27	44	73	97	120	203	238	269	298
REDUCER (LARGER PIPE RESTRAINT)	6"X ø	23	–	–	–	–	–	–	–	–	–	–	–
	8"X ø	38	25	–	–	–	–	–	–	–	–	–	–
	10"X ø	57	43	24	–	–	–	–	–	–	–	–	–
	12"X ø	72	60	44	41	–	–	–	–	–	–	–	–
	16"X ø	99	90	78	75	45	–	–	–	–	–	–	–
	20"X ø	123	116	107	105	81	45	–	–	–	–	–	–
	24"X ø	146	140	132	131	111	82	45	–	–	–	–	–
200psi	30"X ø	209	204	197	188	177	153	116	75	–	–	–	–
	36"X ø	243	236	233	226	217	196	168	135	74	–	–	–
	42"X ø	273	270	265	259	252	234	211	183	133	72	–	–
	48"X ø	301	298	294	289	283	268	249	226	183	131	71	–

NOTES:

1. THE DATA IN THE ABOVE TABLE ARE BASED UPON THE FOLLOWING INSTALLATION CONDITIONS:
   SOIL TYPE–SAND — TEST PRESSURE–150 PSI/200 PSI — DEPTH OF BURY–3'
   TRENCH TYPE–3 — SAFETY FACTOR– 1.5 — VERTICAL OFFSET–3'
   MINIMUM PIPE LENGTH ALONG TEE RUN–5'
2. THE RESTRAINED PIPE LENGTHS APPLY TO DUCTILE IRON AND PVC PIPE.
3. ALL JOINTS BETWEEN UPPER AND LOWER BENDS SHALL BE RESTRAINED.
4. RESTRAINED PIPE LENGTHS APPLY TO PIPE ON BOTH SIDES OF VALVES AND FITTINGS.
5. MULTIPLY PIPE LENGTH BY 1.4 FOR POLYETHYLENE ENCASED PIPE.
6. RESTRAINED PIPE LENGTHS EQUAL TO AN "INLINE VALVE" CONDITION ARE REQUIRED AT EACH END OF A TRANSITION FROM HDPE PIPE TO OTHER PIPE MATERIALS.
7. DESIGN ENGINEER IS RESPONSIBLE TO PROPERLY SIZE THE RESTRAINT PIPE LENGTHS FOR THE PROJECT

MECHANICAL THRUST RESTRAINT MINIMUM PIPE LENGTHS 34W

DEFINITIONS — GENERAL NOTES

1. DEPARTMENT – THE PALM BEACH COUNTY WATER UTILITIES DEPARTMENT.
2. CONTRACTOR – UTILITY CONTRACTOR AND ALL UTILITY SUBCONTRACTORS.
3. ENGINEER – ENGINEER RESPONSIBLE FOR INSPECTION AND CERTIFICATION.

PROCEDURE

1. A PRE–CONSTRUCTION MEETING IS TO BE HELD PRIOR TO DELIVERY OF MATERIALS AND INITIATION OF ANY POTABLE WATER, RECLAIMED WATER AND/OR WASTEWATER SYSTEM CONSTRUCTION. THE MEETING SHALL BE ATTENDED BY THE DEPARTMENT, CONTRACTOR, ENGINEER AND OTHER INTERESTED PARTIES.
2. ANY REVISIONS TO THE APPROVED PLANS SHALL BE CALLED TO THE ATTENTION OF THE DEPARTMENT PRIOR TO THE PRE–CONSTRUCTION MEETING. REVISED PLANS MUST BE APPROVED PRIOR TO THE MEETING.
3. FIVE (5) COPIES OF THE CURRENT APPROVED MATERIAL LIST AND ALL NECESSARY SHOP DRAWINGS SHALL BE SUBMITTED FOR APPROVAL PRIOR TO SCHEDULING OF THE PRE–CONSTRUCTION MEETING.
4. ALL APPLICABLE PERMITS MUST BE OBTAINED PRIOR TO PRECONSTRUCTION MEETING. (DOT, HEALTH DEPARTMENT, COUNTY ENGINEER, ETC.).
5. THE CONTRACTOR SHALL MAINTAIN A CURRENT APPROVED SET OF CONSTRUCTION PLANS ON JOB SITE.
6. ALL MATERIALS SUPPLIED SHALL CONFORM TO PRODUCT LIST AND SHOP DRAWINGS AS APPROVED PRIOR TO CONSTRUCTION. SUBSTITUTE MATERIALS SHALL NOT BE APPROVED AFTER DELIVERY TO THE JOB SITE. ALL REQUESTS FOR MATERIAL SUBSTITUTION SHALL BE APPROVED PRIOR TO DELIVERY OF THESE MATERIALS TO THE JOB SITE.
7. THE LOCATIONS OF EXISTING UTILITIES SHOWN ON THE APPROVED PLANS ARE TO BE VERIFIED IN THE FIELD BY THE CONTRACTOR. APPROVAL OF DEVELOPMENT PLANS BY THE DEPARTMENT IN NO WAY IMPLIES VERIFICATION OF THE ACCURACY OF THOSE PLANS OR FEATURES DEPICTED THEREON. ANY DISCREPANCY IN OR VARIATION FROM THE APPROVED PLANS IS TO BE BROUGHT TO THE ATTENTION OF THE DEPARTMENT BY THE ENGINEER AND CONTRACTOR. THE CONTRACTOR SHALL CONFIRM AND INSTALL (IF NECESSARY) ADEQUATE MECHANICAL PIPE / JOINT RESTRAINT ON EXISTING PIPES PRIOR TO CONNECTION.
8. THE CONTRACTOR SHALL BE RESPONSIBLE AT ALL TIMES THROUGHOUT THE DURATION OF CONSTRUCTION FOR THE PROTECTION OF EXISTING AND NEWLY INSTALLED UTILITIES FROM DAMAGE OR DISRUPTION OF SERVICE. THE CONTRACTOR SHALL BE RESPONSIBLE FOR TAKING SUCH MEASURES AS NECESSARY TO PROTECT THE HEALTH, SAFETY AND WELFARE OF THOSE PERSONS HAVING ACCESS TO THE WORK SITE.
9. THE CONTRACTOR SHALL BE RESPONSIBLE FOR OBTAINING LOCATIONS FROM ALL OTHER UTILITY FACILITIES.
10. THE CONTRACTOR OR ENGINEER SHALL SCHEDULE INSPECTIONS AND TESTS A MINIMUM OF 24–48 HOURS IN ADVANCE.
11. NO CONNECTION TO OR ANY OTHER CONSTRUCTION SHALL BE PERFORMED ON AN EXISTING DEPARTMENT OWNED OR MAINTAINED MAIN OR STRUCTURE WITHOUT THE PRESENCE OF A DEPARTMENT INSPECTOR.
12. FACILITIES PROPOSED HEREIN SHALL BE CONSTRUCTED IN ACCORDANCE WITH THE APPROVED PLANS AND THE DEPARTMENT'S MINIMUM STANDARDS. CONFLICTS BETWEEN THE PRECEDING DOCUMENTS SHOULD BE CALLED TO THE ATTENTION OF THE DEPARTMENT FOR RESOLUTION. DEVIATIONS FROM THE APPROVED PLANS MUST BE APPROVED IN ADVANCE BY THE DEPARTMENT.
13. UPON COMPLETION OF CONSTRUCTION, A FINAL INSPECTION SHALL VERIFY PROPER ADHERENCE TO ALL FACETS OF THE PLANS AND SPECIFICATIONS.

PRESSURE PIPE NOTES

1. THERE SHALL BE 36" MINIMUM COVER FROM FINISHED GRADE TO TOP OF PIPE.
2. DUCTILE IRON PIPE (DIP) THICKNESS SHALL CONFORM TO THE DEPARTMENT'S APPROVED MATERIAL LIST. POTABLE WATER AND RECLAIMED WATER MAINS DIP SHALL BE CEMENT LINED. FORCE MAIN DIP SHALL BE CERAMIC EPOXY LINED.
3. PVC PRESSURE PIPE SHALL BE C–900, SDR–18, 150 PSI.
4. ALL FITTINGS SHALL BE DUCTILE IRON WITH MECHANICAL JOINTS AND CEMENT OR APPROVED EPOXY LINING.
5. POTABLE WATER, RECLAIMED WATER AND WASTEWATER FORCE MAIN VALVES 10 INCHES AND SMALLER SHALL BE RESILIENT SEAT GATE VALVES. TWELVE–INCH (12") OR LARGER FORCE MAIN VALVES SHALL BE RESILIENT SEAT GATE VALVES OR ECCENTRIC PLUG VALVES (IF APPROVED IN ADVANCE BY DEPARTMENT). POTABLE WATER AND RECLAIMED WATER MAIN VALVES LARGER THAN 10 INCHES SHALL BE BUTTERFLY VALVES.
6. ALL TRENCHING, PIPE–LAYING, BACKFILL, PRESSURE TESTING, AND DISINFECTION MUST COMPLY WITH ALL APPLICABLE FEDERAL, STATE, COUNTY AND HEALTH DEPARTMENT STANDARDS AND REGULATIONS.

THIS SPACE INTENTIONALLY LEFT BLANK

WUD PROJECT No. 24-567

13980 89th Pl N
West Palm Beach, FL 33412

PALM BEACH COUNTY FLORIDA

PALM BEACH COUNTY
WATER UTILITIES DEPARTMENT
P.O. BOX 16097
WEST PALM BEACH, FL 33416
(561)493-6000

NO.	DATE	REVISION / REMARKS	BY
	JUNE 2019	GENERAL REVISION	J.L.
*	JAN 2023	GENERAL REVISION	J.L.

STD DETAILS

SHEET NUMBER 7 OF 9

POTABLE WATER #4
STANDARD DETAILS

CONSULTANT:

IT'S THE LAW ! CALL 48 HOURS BEFORE YOU DIG 1-800-432-4770 SUNSHINE STATE ONE CALL OF FLORIDA, INC. UTILITIES NOTIFICATION CENTER

DESIGNED BY: WUD
DRAWN BY: M. BUCKNER
CHECKED BY: J. LAMMERT
APPROVED BY: WUD

Palm Beach County
Water Utilities Department
P.O.Box 16097
West Palm Beach, FL 33416–6097

SEAL
JOSHUA N. LERMAN LICENSE No. 93768 STATE OF FLORIDA PROFESSIONAL ENGINEER
Mar 01, 2023

Drawing: W:_WUD 2023 STD DTL REVS\WUD 2023 STD DTL SHEETS\WUD 2023 STD DTLS - POTABLE WATER (6 SHTS).dwg\WUD PWS-4 - Last Modified: Wed, Mar 01, 2023 - 2:54pm

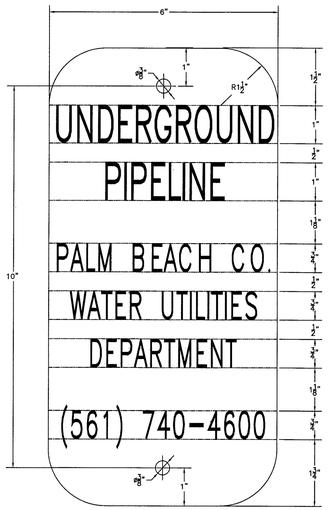

NOTE:

SIGN SHALL BE 6" WIDE X 12" LONG, ALUMINUM (0.080 GA.). SIGN COLOR IS WHITE WITH BLACK LETTERING. ROUNDED CORNERS (1.5" RAD.), 2 HOLES (3/8" DIAM.), 10" O.C.

UNDERGROUND PIPELINE SIGN DETAIL

35W

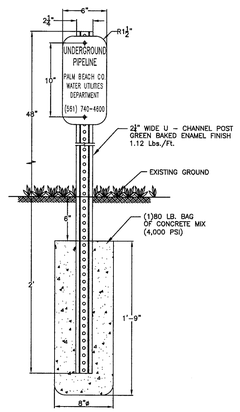

NOTE:

SIGNS SHALL BE 6" WIDE X 12" LONG, ALUMINUM (0.080 GA.). SIGN COLOR IS WHITE WITH BLACK LETTERING. ROUNDED CORNERS (1.5" RAD.), 2 HOLES (3/8" DIAM.), 10" O.C.

SINGLE UNDERGROUND PIPELINE SIGN DETAIL

36W

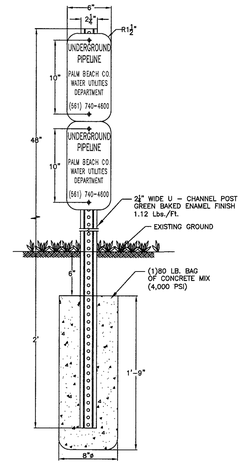

NOTES:

1. SIGNS SHALL BE 6" WIDE X 12" LONG, ALUMINUM (0.080 GA.). SIGN COLOR IS WHITE WITH BLACK LETTERING. ROUNDED CORNERS (1.5" RAD.), 2 HOLES (3/8" DIAM.), 10" O.C.
2. THE DUAL UNDERGROUND PIPELINE SIGN SHALL BE UTILIZED FOR TWO UNDERGROUND PIPELINES WITHIN THE L.W.D.D. RIGHT-OF-WAY.

DUAL UNDERGROUND PIPELINE SIGN DETAIL

37W

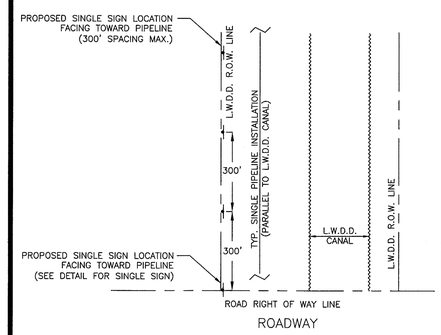

NOTE:

1. UNDERGROUND PIPELINE WARNING SIGNS ARE TO BE PLACED AT THE POINT IN WHICH THE LINE INGRESSES AND EGRESSES THE L.W.D.D. RIGHT-OF-WAY.
2. SIGN SPACING IS TO BE A MAXIMUM OF 300' ALONG THE L.W.D.D. RIGHT-OF-WAY, AS CLOSE AS POSSIBLE TO THE L.W.D.D. RIGHT-OF-WAY.

L.W.D.D. - SINGLE PIPE PARALLEL INSTALLATION UNDERGROUND PIPELINE SIGN INSTALLATION DETAIL

38W

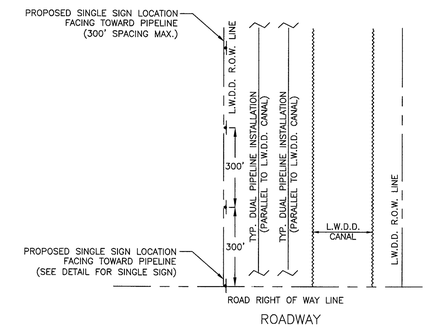

NOTE:

1. UNDERGROUND PIPELINE WARNING SIGNS ARE TO BE PLACED AT THE POINT IN WHICH THE LINE INGRESSES AND EGRESSES THE L.W.D.D. RIGHT-OF-WAY.
2. SIGN SPACING IS TO BE A MAXIMUM OF 300' ALONG THE L.W.D.D. RIGHT-OF-WAY, AS CLOSE AS POSSIBLE TO THE L.W.D.D. RIGHT-OF-WAY.

L.W.D.D. - DUAL PIPE PARALLEL INSTALLATION UNDERGROUND PIPELINE SIGN INSTALLATION DETAIL

39W

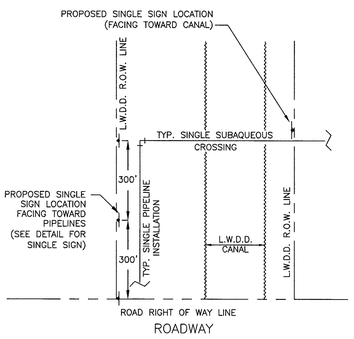

NOTE:

1. UNDERGROUND PIPELINE WARNING SIGNS ARE TO BE PLACED ON BOTH SIDES OF THE CANAL CROSSING; AT THE INSIDE EDGE OF THE RIGHT-OF-WAY.
2. SIGN POST IS NOT TO BE PLACED DIRECTLY OVER PIPELINE. OFFSET SIGN POST 5' FROM PIPELINE.

L.W.D.D. - SINGLE PIPE SUBAQUEOUS CROSSING UNDERGROUND PIPELINE SIGN INSTALLATION DETAIL

40W

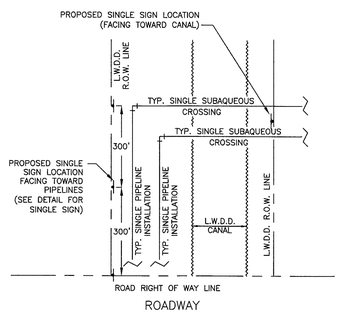

NOTE:

1. UNDERGROUND PIPELINE WARNING SIGNS ARE TO BE PLACED ON BOTH SIDES OF THE CANAL CROSSING; AT THE INSIDE EDGE OF THE RIGHT-OF-WAY.
2. SIGN POST IS NOT TO BE PLACED DIRECTLY OVER PIPELINE. OFFSET SIGN POST 5' FROM PIPELINE.

L.W.D.D. - DUAL PIPE SUBAQUEOUS CROSSING UNDERGROUND PIPELINE SIGN INSTALLATION DETAIL

41W

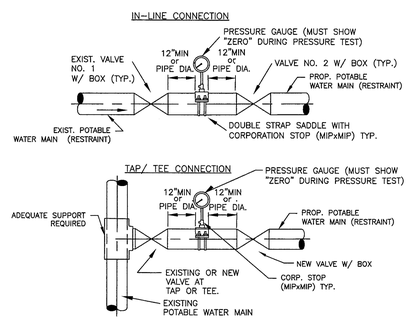

NOTES:

1. THE "ALTERNATIVE" PROCEDURE MUST BE APPROVED BY WUD IN ADVANCE. IT ALLOWS THE NEW PIPE TO BE PRESSURE TESTED PRIOR TO BACTERIOLOGICAL TESTING.
2. BOTH VALVES SHALL BE KEPT CLOSED EXCEPT FOR FILLING AND FLUSHING.
3. WUD SHALL BE NOTIFIED BEFORE FILLING AND FLUSHING.
4. PRESSURE TEST PUMP MAY BE CONNECTED TO SERVICE LINE, FIRE HYDRANT OR BLOWOFF IN THE TESTED WATER MAIN. NO EXTRA TAPS ARE PERMITTED UNLESS UNAVOIDABLE.
5. GAUGE AND RISER TO BE REMOVED AFTER PRESSURE TEST, HOLE TO BE PLUGGED AT SADDLE WITH BRASS PLUG. A BRASS CAP IS REQUIRED.
6. THREAD AREAS OF CORPORATION STOP SHALL BE SPIRAL WRAPPED WITH TWO WRAPS OF TEFLON TAPE.
7. ENSURE PROPER RESTRAINT OF EXISTING VALVE(S) AND PIPE PRIOR TO NEW CONNECTION.
8. SEE ALSO DETAIL FOR "STANDARD POTABLE WATER MAIN TIE-IN PROCEDURE"
9. RECORD DRAWINGS TO SHOW DATA FOR ALL TEST TAPS.
10. ALL BRASS SHALL BE "LEAD FREE".

ALTERNATIVE WATER MAIN TIE-IN

42W

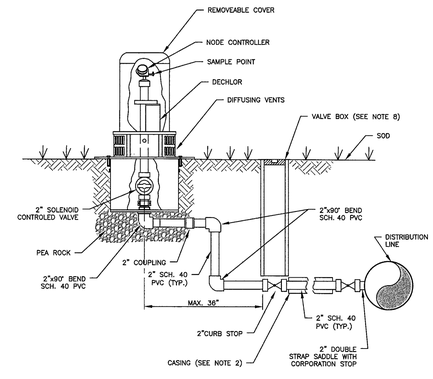

NOTES:

1. AUTOMATIC FLUSHING ASSEMBLY TO BE INSTALLED PER MANUFACTURER'S REQUIREMENTS.
2. FOR INSTALLATION OF SERVICES UNDER DRIVEWAYS AND ROADWAYS, USE MIN. 4" DIAMETER BLACK IRON, PVC SCH 40, OR HDPE SDR 9 CASING. CASING SHALL EXTEND MIN. 24" BEYOND EDGE OF PAVEMENT. CASING TO BE SEALED WITH CEMENT. CASING SHALL BE COLOR-CODED BLACK, WHITE, BLUE, OR BLUE STRIPED.
3. AUTOMATIC FLUSHING ASSEMBLY TO BE INSTALLED AS CLOSE AS POSSIBLE TO THE WATER MAIN WITHIN AN UTILITY EASEMENT OR ROAD RIGHT-OF-WAY WITH PRIOR DEPARTMENT APPROVAL. IF AUTOMATIC FLUSHING ASSEMBLY HOUSING IS INSTALLED IN ROAD RIGHT-OF-WAY IT SHALL NOT INTERFERE WITH CLEAR ZONE REQUIREMENTS AS SPECIFIED BY ROAD OWNER.
4. BEDDING (MIN. 4") AND COVER (MIN. 4") OVER SERVICE LINE OR CASING SHALL CONSIST OF FINE GRANULAR MATERIAL UNSUITABLE IN-SITU MATERIALS SUCH AS MUCK, DEBRIS AND LARGER ROCKS SHALL BE REMOVED WITH 2" MAXIMUM SIZE.
5. ALL HARDWARE (I.E. BOLTS, ETC.) REQUIRED FOR ASSEMBLY INSTALLATION SHALL BE 304 STAINLESS STEEL.
6. THREADED AREAS OF CORPORATION STOP AND OTHER FITTINGS SHALL BE SPIRAL WRAPPED WITH TWO (2) WRAPS OF TEFLON TAPE. ALL BRASS SHALL BE "LEAD FREE".
7. A 4" THICK COMPACTED 3/4" ROCK BASE IS REQUIRED. THE BASE SHALL EXTEND MINIMUM 12" BEYOND AUTOMATIC FLUSHING ASSEMBLY PAD PERIMETER.
8. WHEN VALVE BOX IS LOCATED IN GRASS A CONCRETE COLLAR IS REQUIRED PER DEPARTMENT STANDARDS.

AUTOMATIC FLUSHING ASSEMBLY (TYPE A)

43W

THIS SPACE INTENTIONALLY LEFT BLANK

POTABLE WATER #5
STANDARD DETAILS

CONSULTANT:

IT'S THE LAW !
CALL 48 HOURS BEFORE YOU DIG
1-800-432-4770
SUNSHINE STATE ONE CALL OF FLORIDA, INC.
UTILITIES NOTIFICATION CENTER

DESIGNED BY: WUD
DRAWN BY: M. BUCKNER
CHECKED BY: J. LAMMERT
APPROVED BY: WUD

Palm Beach County
Water Utilities Department
P.O.Box 16097
West Palm Beach, FL 33416-6097

SEAL
JOSHUA N. LERMAN
LICENSE
No. 93768
STATE OF FLORIDA
PROFESSIONAL ENGINEER
Mar 01, 2023

WUD PROJECT No.
24-567

13980 89th Pl N
West Palm Beach, FL 33412

PALM BEACH COUNTY FLORIDA

PALM BEACH COUNTY
WATER UTILITIES DEPARTMENT
P.O. BOX 16097
WEST PALM BEACH, FL 33416
(561)493-6000

NO.	DATE	REVISION / REMARKS	BY
	JUNE 2019	GENERAL REVISION	J.L.
*	JAN 2023	GENERAL REVISION	J.L.

STD DETAILS

SHEET NUMBER
8
OF
9

Drawing: W:_WUD 2023 STD DTL REVS\WUD 2023 STD DTL SHEETS\WUD 2023 STD DTLS - POTABLE WATER (6 SHTS).dwg\WUD PWS-5 - Last Modified: Wed, Mar 01, 2023 - 2:49pm

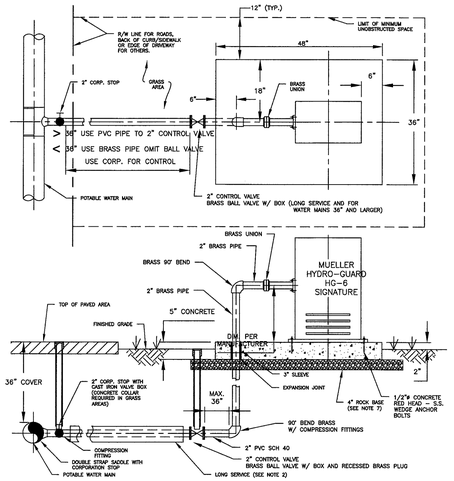

NOTES:

1. 12" MINIMUM CLEARANCE TO BE MAINTAINED BETWEEN AUTOMATIC FLUSHING SYSTEM PAD AND ANY OBSTRUCTION.
2. FOR INSTALLATION OF SERVICES UNDER DRIVEWAYS AND ROADWAYS, USE MIN. 4" DIAMETER BLACK IRON, PVC SCH 40, OR HDPE SDR 9 CASING. CASING SHALL EXTEND MIN. 24" BEYOND EDGE OF PAVEMENT. CASING TO BE SEALED WITH CEMENT. CASING SHALL BE COLOR-CODED BLACK, WHITE, BLUE, OR BLUE STRIPED.
3. AUTOMATIC FLUSHING ASSEMBLY TO BE INSTALLED AS CLOSE AS POSSIBLE TO THE WATER MAIN.
4. BEDDING (MIN. 4") AND COVER (MIN. 4") OVER SERVICE LINE OR CASING SHALL CONSIST OF FINE GRANULAR MATERIAL. UNSUITABLE IN-SITU MATERIALS SUCH AS MUCK, DEBRIS AND LARGER ROCKS SHALL BE REMOVED WITH 2" MAXIMUM SIZE.
5. ALL HARDWARE FOR FLANGED CONNECTIONS (BOLTS, ETC.) TO BE STAINLESS STEEL.
6. THREADED AREAS OF CORPORATION STOP AND OTHER FITTINGS SHALL BE SPIRAL WRAPPED WITH TWO (2) WRAPS OF TEFLON TAPE. ALL BRASS SHALL BE "LEAD FREE".
7. A 4" THICK COMPACTED 3/4" ROCK BASE IS REQUIRED. THE BASE SHALL EXTEND MINIMUM 12" BEYOND AUTOMATIC FLUSHING ASSEMBLY PAD PERIMETER.

PRIOR DEPARTMENT APPROVAL REQUIRED BEFORE PROJECT BEING APPROVED FOR INSTALLATION.

AUTOMATIC FLUSHING ASSEMBLY (TYPE B) 44W

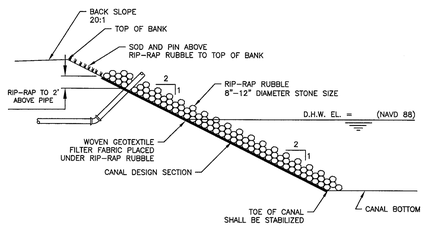

NOTES:

1. RIP-RAP RUBBLE AND ITS INSTALLATION MUST MEET CANAL OWNERSHIP SPECIFICATIONS AND PERMITTING REQUIREMENTS.
2. DUMP RUBBLE IN PLACE FORMING A COMPACT LAYER CONFORMING TO THE CANAL DESIGN SECTION SLOPE. ENSURE THAT RUBBLE DOES NOT SEGREGATE SO THAT SMALLER PIECES EVENLY FILL THE VOIDS BETWEEN LAGER PIECES.
3. AN ALTERNATIVE DESIGN WILL BE CONSIDERED AND MUST RECEIVE PRIOR APPROVAL FROM THE CANAL PROPERTY OWNER.

RIP-RAP RUBBLE DETAIL 45W

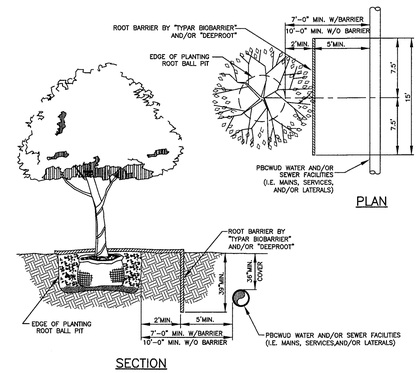

NOTES:

1. TREES SHOWN ON THIS PLAN ARE FOR GRAPHIC REPRESENTATION ONLY. TREE SPACING IS BASED ON DESIGN REQUIREMENTS AND THE TREES SHOWN ON THESE PLANS ATTEMPT TO ACCOMPLISH THAT SPACING WHILE MAINTAINING THE REQUIRED SETBACKS FROM UTILITIES. TREES MAY BE FIELD ADJUSTED TO AVOID CONFLICTS WITH DRIVEWAYS AND UNDERGROUND UTILITIES. IN ANY CASE THE TREES SHALL BE LOCATED IN THE FIELD IN ACCORDANCE WITH THE PLANTING DETAILS SHOWN HEREON.
2. TREES ARE TO BE INSTALLED WITH A TEN FOOT (10') SEPARATION FROM ANY WATER OR SEWER MAIN AND/OR SERVICE, HYDRANTS, AND LIFT STATIONS. IF A TEN FOOT (10') SEPARATION CANNOT BE ACHIEVED, THE TREE CAN BE INSTALLED WITH A ROOT BARRIER SYSTEM. HOWEVER, IN NO CASE SHALL A TREE ENCROACH INTO A PBCUE WITHOUT PRIOR DEPARTMENT APPROVAL.
3. ONLY SOD CAN BE INSTALLED WITHIN 7.5' MINIMUM OF A FIRE HYDRANT UNLESS OTHERWISE APPROVED BY THE FIRE MARSHAL AND THE DEPARTMENT.
4. SOD ONLY SHALL BE INSTALLED WITHIN 5.0' MINIMUM OF ANY DEPARTMENT WATER METER.
5. WHEN INSTALLING A SOLID ROOT BARRIER PANEL SYSTEM THE PANEL RIBS MUST FACE THE TREE ROOT BALL.✳

LANDSCAPE AND ROOT BARRIER DETAIL ✳ 46W

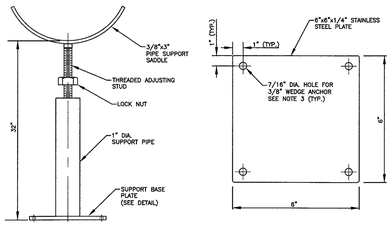

NOTES:

1. SHOP DRAWING FOR THE METER ASSEMBLY PIPE SUPPORT IS REQUIRED TO BE SUBMITTED FOR APPROVAL BY THE DEPARTMENT PRIOR TO THE PIPE SUPPORT BEING CONSTRUCTED AND/OR INSTALLED. ALL PIPE SUPPORTS FOR EACH METER ASSEMBLY INSTALLATION SHALL BE THE SAME.
2. ALL PIPE SUPPORT MATERIALS AND MOUNTING HARDWARE ARE REQUIRED TO BE 304 STAINLESS STEEL.
3. THE REQUIRED WEDGE ANCHORS FOR EACH SUPPORT SHALL BE 3/8" DIAMETER WITH NOMINAL EMBEDMENT OF 2-3/8". EACH ANCHOR SHALL HAVE A WASHER, LOCK WASHER, AND NUT.

ABOVE GROUND WATER METER INSTALLATION PIPE SUPPORT 47W

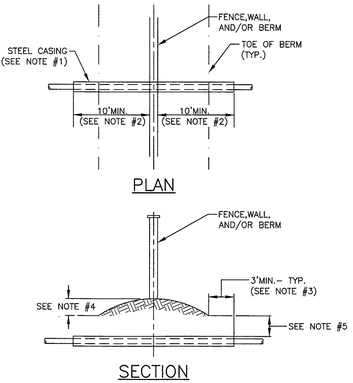

NOTES:

1. STEEL CASING PER WUD STANDARD DETAIL 22W (SOLID CASING) OR WUD STANDARD DETAIL 22AW (SPLIT CASING) AS APPLICABLE.
2. STEEL CASING SHALL EXTEND TEN (10) FEET MINIMUM PAST FENCE OR WALL. FIVE (5) FEET MINIMUM MAY BE ACCEPTABLE ON A CASE-BY-CASE BASIS DUE TO SITE CONDITIONS AND ONLY WITH PRIOR DEPARTMENT APPROVAL.
3. STEEL CASING SHALL EXTEND THREE (3) FEET MINIMUM PAST THE TOE OF THE BERM. IF BERM CASING IS ASSOCIATED WITH A WALL OR FENCE INSTALLATION OF THE CASING SHALL EXTEND THREE (3) FEET MINIMUM PAST THE TOE OF THE BERM OR TEN (10) FEET MINIMUM PAST THE WALL OR FENCE WHICH EVER IS GREATER.
4. STEEL CASING INSTALLATION REQUIRED WHEN A BERM IS TWO (2) FEET OR HIGHER ABOVE SURROUNDING GRADE.
5. TOP OF STEEL CASING SHALL BE THREE (3) FEET MINIMUM BELOW THE TOE OF THE BERM OR BASE OF WALL OR FENCE ELEVATION WHICHEVER IS LOWER.

POTABLE WATER MAIN CROSSING FENCE,WALL, OR BERM CASING DETAIL* ✳ 48W

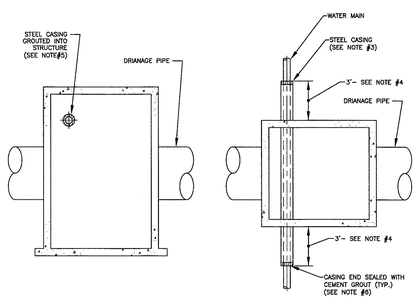

WUD MAIN SIZE	DIAMETER OF STEEL CASING SIZE	OPENING SIZE FOR SOLID CASING	OPENING SIZE FOR SPLIT CASING
6"	14"	18"	20"
8"	20"	24"	26"
10"	20"	24"	26"
12"	24"	28"	30"

NOTES:

1. THE CONFLICT STRUCTURE IS TO BE DESIGNED PER CURRENT FDOT UTILITY CONFLICT THRU DRAINAGE STRUCTURE STANDARDS.
2. A SHOP DRAWING TO SCALE FOR EACH CONFLICT STRUCTURE INSTALLATION IS REQUIRED TO BE APPROVED BY THE DEPARTMENT PRIOR TO INSTALLATION.
3. STEEL CASING PER WUD STANDARD DETAIL 22W (SOLID CASING) OR WUD STANDARD DETAIL 22AW (SPLIT CASING) FOR EXISTING WATER MAIN ONLY.
4. STEEL CASING SHALL EXTEND THREE (3) FEET PAST EACH SIDE OF STRUCTURE. CASING CAN EXTEND FURTHER PAST THE STRUCTURE WHEN EXISTING CONDITIONS WARRANT AND ONLY WITH PRIOR DEPARTMENT APPROVAL.
5. STEEL CASING SHALL BE GROUTED IN PLACE WITH NON-SHRINKABLE CEMENT GROUT TO PROVIDE A WATERTIGHT SEAL TO PREVENT ANY LEAKAGE INTO THE STRUCTURE.
6. NON-SHRINKABLE CEMENT GROUT TO BE INSTALLED AT EACH END OF CASING TO OBTAIN WATERTIGHT SEAL.

POTABLE WATER MAIN CONFLICT STRUCTURE DETAIL* ✳ 49W

THIS SPACE INTENTIONALLY LEFT BLANK

THIS SPACE INTENTIONALLY LEFT BLANK

THIS SPACE INTENTIONALLY LEFT BLANK

THIS SPACE INTENTIONALLY LEFT BLANK

POTABLE WATER #6 STANDARD DETAILS

CONSULTANT:

IT'S THE LAW! CALL 48 HOURS BEFORE YOU DIG 1-800-432-4770 SUNSHINE STATE ONE CALL OF FLORIDA, INC. UTILITIES NOTIFICATION CENTER

DESIGNED BY: WUD
DRAWN BY: M. BUCKNER
CHECKED BY: J. LAMMERT
APPROVED BY: WUD

Palm Beach County
Water Utilities Department
P.O.Box 16097
West Palm Beach, FL 33416-6097

SEAL: JOSHUA N. LERMAN LICENSE No. 93768 STATE OF FLORIDA PROFESSIONAL ENGINEER
Mar 01, 2023

WUD PROJECT No. 24-567

13980 89th Pl N
West Palm Beach, FL 33412

PALM BEACH COUNTY FLORIDA

PALM BEACH COUNTY
WATER UTILITIES DEPARTMENT
P.O. BOX 16097
WEST PALM BEACH, FL 33416
(561)493-6000

NO.	DATE	REVISION / REMARKS	BY
	JUNE 2019	GENERAL REVISION	J.L.
✳	JAN 2023	GENERAL REVISION	J.L.

STD DETAILS

SHEET NUMBER 9 OF 9

Drawing: W:_WUD 2023 STD DTL REVS\WUD 2023 STD DTL SHEETS\WUD 2023 STD DTLS - POTABLE WATER (6 SHTS).dwg\WUD PWS-6 - Last Modified: Wed, Mar 01, 2023 - 2:50pm

AGENDA ITEM NO. 14.1

INDIAN TRAIL
IMPROVEMENT DISTRICT
EST. 1957

Executive Summary

REGULAR MEETING BOARD OF SUPERVISORS

DATE:	January 15, 2025
SUBMITTED BY:	Scarlet Cantley
DEPARTMENT:	Legal
ITEM TYPE:	Reports
AGENDA SECTION:	**REPORTS (File and Receive)**
SUBJECT:	District Attorney Report
BACKGROUND:	
FISCAL IMPACT:	
RECOMMENDATION:	Receive and file attached District Attorney Report.

ATTACHMENTS:
25-0107 ITID January 15 2025 Meeting Legal Status Report Final Clean.pdf

CALDWELL PACETTI
EDWARDS SCHOECH & VIATOR LLP

MANLEY P. CALDWELL, JR.
KENNETH W. EDWARDS
CHARLES F. SCHOECH
MARY M. VIATOR
WILLIAM P. DONEY
FRANK S. PALEN
JOHN A. WEIG

OF COUNSEL
BETSY S. BURDEN
RUTH P. CLEMENTS

ATTORNEYS AT LAW

1555 PALM BEACH LAKES BLVD.
SUITE 1200
WEST PALM BEACH, FLORIDA 33401

PARALEGAL
EMILIE PEARSON, CP

www.caldwellpacetti.com

TELEPHONE: (561) 655-0620
TELECOPIER: (561) 655-3775

MEMORANDUM

TO: Board of Supervisors of the Indian Trail Improvement District
FROM: Caldwell Pacetti Edwards Schoech & Viator LLP
DATE: January 7, 2025
RE: Legal Status Report for January 15, 2025 Board of Supervisors Meeting

==========

The following is a summary of work in progress and the status thereof, for Indian Trail Improvement District. During the past month, we have provided legal services to the District regarding the following items:

1. **Employment/Personnel**. We coordinated with the District and its Employment Counsel on multiple District Management/ Personnel Issues.

2. **Emails**. We have reviewed and responded to emails and requests from various Board Members, Staff and Consultants concerning general matters relating to Indian Trail Improvement District.

3. **Pending Litigation.**

   a. **Minto PBLH, LLC & Seminole Improvement District v. Indian Trail Improvement District.** On June 11, 2020, Minto PBLH LLC ("Minto") and Seminole Improvement District ("SID") filed a complaint in Circuit Court in Palm Beach County against the District seeking declaratory and injunctive relief, seeking to prevent the District from denying Minto/SID unrestricted vehicular access to 140th Avenue North and other District roads. Minto/SID claim their right of access is absolute based on a certain private Right-of-Way Agreement recorded in 1966 by the original landowners of Callery-Judge Groves. Minto/SID's claim is based on their alleged status as successors in interest to the original landowners who created the Right-of-Way in 1966. The District disputed this claim and retained independent litigation counsel to pursue a defense.

      STATUS. On October 13, 2023, Judge Oftedal issued an Order denying Plaintiff SID/Minto's Motion for Final Summary Judgment and Granting ITID's Motion for Partial Summary Judgment. The Judge ruled in favor of the District on its substantive claims, which are summarized as follows:

      "In summary, the Court finds SID has no interest in the right-of-way under the ROW Agreement and that Minto's use of the right-of-way will overburden the intended scope of

the easement. The Court further finds ITID's roadways lack a public dedication under §335.01, Fla. Stat., and are, consequently, not public roads within the contemplation of that statute. Finally, the Court finds ITID possesses the statutory authority to condition Plaintiffs' use of the right-of-way connection onto ITID's roads by issuance of a permit and assessment of a reasonable fee, as provided under its charter and [§298.22(6)], Fla. Stat."

Plaintiff SID/Minto filed a motion to reconsider the Order, claiming certain errors. ITID's Litigation Counsel filed a motion for Final Summary Judgment on all matters. A hearing was held on this motion on December 4, 2023. An Order from the Court on the motions denied Plaintiff SID/Minto's motion for reconsideration. With the exception of two minor typographical changes, the Court ruled that its order of October 13, 2023 stands. The Court also denied ITID's motion for final judgment based on the fact that neither side specifically addressed Plaintiffs' affirmative defenses to ITID's counterclaim in their prior motions for summary judgment. District's Litigation Counsel felt that the Court's prior ruling had effectively dealt with the issues raised in the plaintiffs' affirmative defenses. However, perhaps out of an abundance of caution, the Court ruled that those affirmative defenses should be specifically addressed in an additional motion for summary judgment. Motions for Partial and Final Summary Judgment were filed by both parties on February 2, 2024. A hearing on the Motions for Final Summary Judgment was held on April 1, 2024. A Final Order by Judge Oftedal was issued on May 14, 2024. The Final Order denied SID/Minto's joint motion for partial summary judgment, granted ITID's motion for partial summary judgment, and entered a final judgment in favor of ITID. SID/Minto have 14 days to file a motion for a rehearing, upon the expiration of which the matter would be settled.

On May 29, 2024, Plaintiff SID/Minto filed a motion for a rehearing and clarification of the Final Judgment of May 13, 2024. On June 25, 2024, Judge Oftedal issued an Order denying SID/Minto's motion for a rehearing. On July 3, 2024, Plaintiff SID/Minto filed a Notice of Intent to appeal the Final Judgment with the Fourth District Court of Appeal. On September 26, 2024 the Developer and SID filed a motion to have the clerk correct the record so that all pleadings in the court record are correctly identified by docket number. That motion tolls the time for the Defendants to file their initial briefs until the clerk does so. The record has now been corrected, and The Appellant's Brief for the Developer and SID is due January 15, 2025.

b. <u>181 Farm North, LLC v. Indian Trail Improvement District</u>

181 Farm North LLC owns a lot in El Rancho Estates, an unrecorded subdivision abutting ITID's Unit of Development No. 12 and 180th Avenue North. El Rancho Estates is not within a District Unit of Development. All abutting landowners in El Rancho Estates, including 181 Farm North, were provided an opportunity to apply for a permit to connect to 180th Avenue North. No permit application was received. In order to preserve and protect the District's Works, the Board directed staff to install a guardrail continuously along the western boundary of 180th Avenue North. The guardrail is being installed in conjunction with paving of 180th pursuant to the R-3 Road Program. Upon installation, the landowner will be prevented from accessing 180th Avenue North from driveway installed on its property.

On August 29, 2024, 181 Farm North LLC filed a Complaint in Circuit Court seeking temporary and permanent injunctive relief preventing the District from installing the

guardrail. The complaint raises an issue regarding the District's legal authority to install guardrails, which is essentially a legal question to be resolved by the court.

The District's defense has been assigned to the law firm of Xenick Lebedeker & Pepin, LLC. A Motion to Dismiss the Complaint was filed by District Counsel on October 7, 2024. An extension was agreed upon between Counsel and a motion to dismiss was filed on October 29th, 2024. As of this date, a hearing on the motions has not been scheduled.

c. ESM Property Investment 2 LLC v Indian Trail Improvement District

This matter is a new lawsuit filed by the owner of the property located at 4930 Royal Palm Beach Blvd. The owner of the property has installed landscaping and trees; driveway paving materials: landscape rocks; a fence and a guardrail type structure within the boundary of a District canal easement thereby creating obstructions that would impair the District's ability to maintain the abutting canal. The District has notified the owner to remove the encroachments from the canal easement, but the owner has refused to due so. District staff has also advised the owner of the property that in the event the owner of the property fails to remove the encroachments, District staff will enter the easement property and remove the encroachments at the owner's expense.

The owner has responded by filing this lawsuit seeking an injunction to prohibit the District from entering the easement area and removing the encroachments. The owner is not represented by counsel. The District has not yet been properly served with the lawsuit papers and has been in contact with its insurance carrier concerning the defense of this matter.

4. **Miscellaneous**. We are continuing to work with the District and the District Consultants on various miscellaneous day-to-day issues, Agenda Items and attend the Meetings of the Board of Supervisors on the following listed matters:

(a) Public Records Requests
(b) Public Records Retention Issues
(c) Extraordinary Inquiries Related to Minto/SID Litigation
(d) Minto/SID Litigation, General Case Coordination
(e) Coordinated with Staff regarding Operations and Maintenance Issues
(f) Researched and Coordinated Supervisor Issues
(g) Administration, Public Information Matters
(h) Administration, Agreement with Robert Half Intl., Inc., Employment Services
(i) Administration, Risk Management Policies, Coordination with Staff and Insurer
(j) Administration, Shred-It Contract Review
(k) Administration, Agricultural Hauling Speed Bump Noise Complaints
(l) Operations & Maintenance, Unpermitted Access to District Road, 132 Viscaya in La Mancha (VRPB) to 40th Street North (Phillips).
(m) Palm Beach County Traffic Control on District Roads, Issues
(n) Palm Beach County Traffic Control, Dialogue with Palm Beach County Attorney
(o) Palm Beach County, Countywide Transportation Master Plan
(p) Palm Beach County, Comprehensive Plan Amendment, West End Crossing (NLB & SPW Road)
(q) Permits, 4930 RPB Blvd Encroachment Issues

(r) Parks, Acreage Athletic League Service Provider Agreement Issues
(s) Roads, R-3 Road Paving, Construction of 60th Street North Between 180th & Mandarin [R-308A], Engineering Design Issues, School Board Coordination
(t) Roads, R-3 Road Paving, Construction of Hamlin Boulevard from 190th to 94th Avenue North to Calamondin Boulevard [R-302] and Hamlin Boulevard from Calamondin Boulevard to 180th Avenue North [R-303], Contract Scope Substitution (Geogrid)
(u) Roads, R-3 Road Paving, Construction of Hamlin Boulevard from 190th to 94th Avenue North to Calamondin Boulevard [R-302] and Hamlin Boulevard from Calamondin Boulevard to 180th Avenue North [R-303], Driveway Connections from El Rancho Estates
(v) Roads, R-3 Road Paving, 140th [R-313]/61st [R-3114]/Tangerine [R-315]., Contract with R&D Paving LLC,
(w) Unit of Development 19A (Shops at Indian Trails), Road Easement
(x) Unit of Development 19B (Alton Northlake MUPD), Development Plans
(y) Unit of Development 19C (Coconut Palm Plaza), City of PBG Site Plan Revision, Drainage Issues
(z) Unit of Development 23 (Rawlings Estates PUD), Unit Formation
(aa) Petition of D. R. Horton, Inc. to Form a Unit of Development for Vintage Oaks PUD
(bb) Vintage Oaks PUD, Amendment to Drainage Service Agreement and Partial Release of Easement (D. R. Horton Inc. as Successor to Northlake 20 LLC)

AGENDA ITEM NO. 14.2

INDIAN TRAIL
IMPROVEMENT DISTRICT
EST. 1957

Executive Summary

REGULAR MEETING BOARD OF SUPERVISORS

DATE:	January 15, 2025
SUBMITTED BY:	Jay Foy
DEPARTMENT:	Engineering
ITEM TYPE:	Reports
AGENDA SECTION:	**REPORTS (File and Receive)**
SUBJECT:	Monthly Engineer's Report
BACKGROUND:	Monthly Engineer's Report for January 2025
FISCAL IMPACT:	None
RECOMMENDATION:	Receive and File

ATTACHMENTS:
2025_0115 - ENG RPT SS.pdf

INDIAN TRAIL IMPROVEMENT DISTRICT
DISTRICT ENGINEER'S PROJECT STATUS REPORT
January 15, 2025 BOARD MEETING
Status **UPDATE** as of 1/5/25

ITID DISTRICT MATTERS – SJE

- **Overall ITID** (91084.000)
  Attended ITID agenda, BOS, and Zoom meetings and assisted in agenda preparation.

  Prepared monthly Engineer's reports and coordinated with engineers and surveyors.

  Responded to numerous queries: future expansion, Unit consolidation, 15955 71st, SEFLUC membership, and ITID aerial.

  Attended Legislative Forum meeting.

  Coordination continues regarding existing and possible grants.

  Continued coordinating with PBC staff regarding review of DROs.

  Same as 12/18/24: Met with ITID staff and Palm Beach Gardens staff. Note no site plan for Coconut Palm Plaza is in process at PBGs (east side of Coconut, north of Hamlin on Northlake Blvd that proposed convenience store with 16 fueling stations, retail, and a 4 story 176 multifamily building).

  Continued file management: naming electronic files/folders, eliminating duplicates, combining files, dating documents, running optical character recognition (OCR), and re-filing in correct job folders. Being completed as needed, not a separate initiative.

- **Santa Rosa Groves** (91084.001)
  Started research on alternate pump station design using Angle Lineshaft Axial Flow Pumps (typically used in agriculture). SFWMD doesn't want a pre-application but did respond to a second request answering a pump station question (sort of: answer was provide reasonable assurance 12,000 gpm will not be exceeded). This begs the question as to what they believe "reasonable" is. Started putting together a permitting set of plans for submital to SFWMD.

  Same as 9/18/24: Grant coordination continues. Survey and Geotechnical work complete.

- **<u>EW Canal Grant 4337-267-R</u>** (91084.003)
  At the request of the COE, filled out a 404 application form with attachments. Submitted to the Corps on 10/22/24. Waiting on response from the COE.

  Same as 10/16/24: Assisted District staff in preparation of an extension letter and amendment. Meeting held to discuss grant modelling. Provided AutoCad file to FDEM.

  Same as 5/15/24: Reran all 10 year model runs and added 25, 50, & 100 year model runs for grant justification reasons to make damage assessments. Republished report due to revised operations and added additional modelling results.

  Same as 5/15/24: Developed damages assessment methodology and spreadsheet. Entered results of the damages assessment into the grant workbook to analyze benefits versus costs. Published a Technical Memorandum addressing the assessment methodology and benefits.

  Same as 3/27/24: Submitted for an FDEP wetlands jurisdictional determination. Awaiting a response from FDEP (note the FDEP took over this determination from the Corps of Engineers) but in a conference call with FDEP staff they cited they are short of staff and a determination will take some time and be patient. Recent Federal Court ruling may make Florida 404 permitting requirements void. This permitting is in limbo.

  Same as September 2023: Received a grant for $1,678,108 from the Fiscal Year 2023-2024 Statewide Flooding and Sea Level Rise Resilience Plan. A Kickoff meeting was conducted on 8/10/23.

- **<u>M-0 Outfall Grant 4337-288-R</u>** (91084.006)
  Researched design data for the M-0 Outfall structure and answered some questions.

  Same as 9/18/24: Applied for and received an extension of the SFWMD ROW permit.

  Same as 8/21/24: Applied for COE 404 (Wetlands) permit/Jurisdictional Determination (JD) as no response has been received to a previous request for a "No Permit Required" letter. Received acknowledgement of receipt. Corps assigned a reviewer and had a phone conversation regarding the application. He believed the project would be Corps jurisdictional as the L-8 connects to Lake Okeechobee. Lake Okeechobee (LO) is a navigable water of the US. Corps reviewer sent application forms and requested response on both the JD and permit submittal. Due to the connection to LO a response to drop the JD was sent and an application for a 404 permit was submitted. Received and responded to a request for additional information, waiting on a response or issuance of the permit.

Same as 3/29/23: The State of Florida has appropriated $397,110 for the construction of the outfall. This is about 50% of the upgraded structure and may supplement the FDEM grant we already have as this grant is Federally funded. Same as 12/7/22: Received SFWMD's Right of Way and Environmental Resources Permits. Design and permitting are complete. Provided numerous documents to close out the first phase of the grant. Waiting on DEM's acknowledgement of completed information. Numerous emails to support close out.

- **UNIT 19C Coconut Palm Plaza** (91084.010)
  Same as 12/18/24: Note: in meeting with PBG staff it was noted that a site plan was not under review as of 11/21/24. Sent revised draft WCP to applicant for review.

  Same as 9/18/24: Received full site plan from applicant. Cites the multifamily as 176 units. Had questions on the site plan and the applicant answered them. Update scheduled on the 11/13/24 BOS meeting. Can proceed with preparation of WCP.

  Same as 8/21/24: Resolution was approved at the 7/25/23 Board to consider intent to activate. The second step was advertising for public input prior to consideration by the Board to adopt a Resolution "Approving and Confirming Creation of the Unit and authorization to prepare the Water Control Plan. This Resolution was approved at the 9/20/23 the Board of Supervisors' meeting. The Board wants to make sure the applicant is aware no driveway on Hamlin Boulevard is allowed. The District Engineer prepared a draft Water Control Plan and sent it to the applicant and applicant's engineer to review and add the site plan exhibit they wish to be approved in the Water Control Plan. The Applicant's engineer is processing a Special Permit at the same time and it appears the plans will be completed prior to completion of the Water Control Plan process. A Special Permit cannot be issued prior to the completion of the Water Control Plan process (which includes and Engineer's Report).

- **RAWLINGS ESTATE** (91084.011)
  Same as 8/21/24: Coordination with the applicant continues and a draft Agreement was sent to the landowner for their consideration. The owner has submitted to PBC and is in the DRO review process.

- **UNIT 19B ALTON NORTHLAKE Unit 19B** (91084.012)
  Same as 12/18/24:
  Coordination initiated regarding entrance onto 140th Ave N.

- **NPDES** (91084.015)
  Same as 2/28/24: Submitted signed NPDES Annual Report and Water Quality Assessment Report on 1/17/24. The report covers FY 22-23. This Annual Report is for the 7th year of the 4th term 5 year FDEP permit. FDEP lags behind in issuing the

5th term, 5 year permit. It is most likely that we will be utilizing the same 4th term permit but for the 8th year for FY 23-24.

All NPDES information is on the PBC Group NPDES website: http://pbco-npdes.org.

- **M-1 Basin** (91084.016)
  Compiled monthly surface and ground water reports and sent to SFWMD.

  Asked SFWMD for pre-application meeting to address possible revisions to the Amil Gate. SFWMD is trying not to have these meetings. Answered SFWMD questions.

  Answered street light question for 14316 74th.

  Researched and answered questions regarding PS 3 pumps.

  Answered telemetry questions.

  Same as 11/13/24: Geotechnical boring taken at the 640 acre site. Received Report.

  Same as 10/25/23: Sent out Operations schedule showing the M-1 Basin gets 200 cfs through to the C-51 Basin even in a declared emergency unless SFWMD notifies Indian Trail otherwise.

- **M-2 Basin** (91084.020)
  Compiled monthly surface water stages and transmitted to SFWMD and ITID.

  Visited new pipe installation on Cheatham Hill

  M-2 Impoundment Bypass was on the 10/16/24 agenda and the Board awarded the bid to J & M Pipeline. The Board President signed the contract and all contract documents are complete. The NTP (Notice to Proceed) was issued for 1/2/25 and a pre-construction meeting was held. Note: coordination and approval through PBC takes extra time and there are new State requirements incorporated into the contract documents.

  Same as 3/27/24: The M-2 Impoundment "No Permit Required" Corps letter expired. Resubmitted for another USA COE NPR letter and was informed by the Corps that they have now delegated that permitting authority to the State FDEP. Sent a request for an NPR letter to FDEP and am still awaiting a response. This permit is also now in limbo due to the uncertainty of 404 permitting. Note: there is no wetlands jurisdiction for excavation. ITID is not filling the area so this is non-jurisdictional.

  Same as 4/27/22: Researched control elevation in the M-2 Canal between C-51 and Sycamore. No citations are contained in the SFWMD permits to Indian Trail,

Seminole Improvement, or Lion Country. There is a condition citing Indian Trail must close its gates from the NW Basin if water levels are at 17.5' NGVD or above. This is odd as the west gate (of 3 gates) in SID's M-2 Canal at C-51 (north of) was permitted to Indian Trail. Both operations stages in the M-2 Canal and eliminating this high water discharge limitation are warranted (in the District Engineer's opinion).

- **Roadways** (91084.025) – **ALSO SEE ATTACHED STATUS REPORTS**
  The R-3 Roadway projects: 140th from 61st to Orange, 61st from 140th to Avocado, and Tangerine from 140th to Avocado was awarded at the 8/21/24 BOS meeting to the lowest bidder, R & D Paving. Contract documents are complete and the NTP was issued for 1/6/25. The next bid set of R-3 Roadway projects is Tangerine from 180th to Mandarin. Tangerine is still in design.

  ITID staff have completed the paving of 89th.

  The last R-3 Roadway to be bid on is 180th from Tangerine to Hamlin. The survey for 180th is now complete. 180th is in design however we have right of way issues at the school property and to the north in the GL (Palms West) property. These will have to be addressed for design to proceed. Coordinating with the School Board and GL Homes.

  Responded to miscellaneous questions: millings near ACP, no parking signs, workshop, easement width of 180th, and Okeechobee bridge over the M-2 Canal.

  Same as 12/18/24: Researched 140th ROW from Hamlin to Northlake. Found 80' is deeded to PBC, ORB 1229, page 135.

  Same as 12/18/24: Investigated the connections to Beeline Highway. There may be two but there are differences of opinion from PBGs and PBC as to the routes.

  Same as 3/27/24: The TPA's 2045 long range plan does not include funding for the extension of Seminole Pratt Whitney road to 100th and across to Avenir. The County is depending on Avenir to construct its roadway through to Beeline Highway. It is noted that entrances off of Northlake Blvd into Avenir align with 140th and Coconut. The sequence of construction will exacerbate the traffic volumes on Northlake from SPW Rd to Coconut. Also, without SR7 through to Northlake, Royal Palm Beach Blvd and all connector roads through ITID will be impacted.

  Same as 3/31/21: Created a preliminary map of roads needing milling and overlays, now complete. Discussed at the 2/17/21 BOS meeting. Board gave direction to investigate funding.

- **Water Quality Sampling** (91084.068)
  The latest sampling was completed on 12/11/24. Asked question about temperature.

Same as 4/19/23: Note, due to changing testing labs the data is now being taken as required by the SFWMD M-1 Basin permit. These data exclude nutrients.

- **Corbett** (91084.070)
  Construction is underway to complete the Levee up to SPW Rd. The section north of SPW Rd is delayed.

  Same as 3/27/24: The SFWMD bid let Phase 2 of the SE Corbett Levee. The low bidder was ENCO, LLC for $8,967,000. The next lowest was Dickerson for $13,343,000. The bid award went before the SFWMD Board on 3/14/24. In receipt of the Draft Grant Agreement to SFWMD in an amount of $7,705,000 with a match of $7,705,000 and total of $15,410,000 as signed by SFWMD on 9/11/23.
  Same as 1/27/16: 2.7 miles of the levee is complete from the M-1 Impoundment to the east and another 1.8 miles of fill to just west of our "L" Canal was placed.

- **Telemetry** (91084.077)
  Same as 2/15/23: New telemetry system operable. Improvements of the M-2 complete.

- **Loxahatchee River Watershed Restoration Plan: FKA North County Plan/Mecca** (91084.088)
  Same as 12/18/24: Two tours were attended, the first with a State Representative and the second with PBC and PB Aggregates representatives. Flow way paths and options were discussed.

  Same as 10/16/24: Attended SFWMD meetings on Sept 24th and 25th at the Mounts Building. Not much different than previous updates. The ASR component is delayed, but the reservoir design is proceeding.

  Same as 3/27/24: SFWMD made a status presentation to the Board at the 2/28/24 meeting. Continued corresponding with PBC/SFWMD on water availability from the M-1 Basin.

  Same as January 2021: The Corps provided an "effect statement" to Congress with no revisions to the plan as desired by local interests. In other words, the Plan is limited to the C-18 Reservoir and benefits to the Loxahatchee River without water supply, flood control, or the Lake Worth Lagoon to receive purposeful benefits. WRDA2020 passed both houses of Congress and was signed by the president on December 27, 2020. The Federal share is $379,593,000 and the non-Federal share is $375,737,000 for a total cost of $755,320,000.

  Note: Although ITID continues to improve its current drainage system, we do not meet the adopted Level of Service in the M-1 Basin when the regulatory constraints are activated to reduce our discharge to 1/4"/day. ITID does have the conveyance

capacity to discharge almost 2"/day. However: see new SFWMD allowance above under the M-1 Basin, 91084.016.

- **Inverted Siphon – Upgrade Existing Conditions** (91084.109)
  Same as 4/8/15: SFWMD issued a modification to their Surface Water Management Permit on February 10, 2014. The options study was completed and was presented to the Board at the 1/21/15 meeting. The required alterations by WPB will require a modification to the SFWMD permit. Permitting is on hold until the City of West Palm Beach initiates its "M" Canal widening project or PBC proceeds with 60th.

- **SR7 Extension** (91084.212)
  Construction delayed until at least 2028 due to legal challenges from WPB.

- **Westlake/Minto/Callery Judge** (91084.222)
  SID notified ITID of 140th in their jurisdiction.

  Same as 10/16/24: Received final judgement in favor of ITID.

- **GL Homes** (91084.235)
  Same as 11/13/24: Geotechnical borings complete and received the geotechnical report for the 640 acre Impoundment.
  Same as 7/17/19: Restrictive covenant is now recorded, and the final development order received which fulfills a condition of the 640 Ac Agreement.

- **Vintage Oaks** (FKA Northlake Commercial, 91084.238)
  Attempting to start the WCP process but need to modify or have a new Landowners Agreement. Met with the landowner and waiting on comments before it will be presented to the Board. Also coordinating with PBC, PBG and applicant's engineer regarding ITID's requirements.

- **Vavrus/Avenir** (91084.241)
  Minimal tracking; on an as needed basis.

- **FEMA FIRM** (91084.301)
  Same as 1/22/20: Reviewed new draft PBC FIRMs, these were completed to add coastal storm effects. No revisions to the District's maps are proposed (and none should have been due to the coastal effects not affecting high water levels west of S-155, the water control structure at US#1 and the C-51 Canal).

  PBC has added the new map information to their web site at: http://maps.co.palm-beach.fl.us/cwgis/?app=floodzones these data were officially effective on 10/5/17.

- **Moss Pilot Project** (91084.396)
  Same as 2/15/23: FDEP requested the report be signed and sealed. Final signed and sealed report sent to FDEP. Waiting on FDEP for any additional information requests.

- **Acreage Community Park** (91084.P09)
  See Executive Director's Report.

- **Hamlin Park** (91084.P04)
  Same as 10/16/24: Completed site visit for grant signoff.

SPECIAL PERMITS

- **Overall:**
  Answered Special Permit question UT permit on Southern at the M-1 Canal.

- **Seminole Pratt Whitney Road – Orange to Northlake #0019** (91084.218)
  Construction underway.

- **SPW Road & Northlake Blvd-Special Permit #0079** (91084.242)
  Construction underway.

- **SR7 MOT 110th Orange Grove to 60th #0096** (91084.332)
  An extension was granted for two years at the 8/16/23 Board meeting to 8/16/25.

- **RPB Blvd 60th to Orange-Special Permit #0125** (91084.327)
  Approved at the 12/16/20 Board meeting.

- **PBC Northlake Blvd Lane Widening-Special Permit #0347** (91084.417)
  Modification to construct 6 lanes approved at the 1/25/23 Board meeting.

- **PBCWUD SPW and NL-Special Permit #0376** (91084.445)
  Approved at the 6/10/20 meeting with conditions. Construction started.

- **PBCWUD SPW S of NL-Special Permit #0375** (91084.447)
  Construction started.

- **PBC Northlake at Avenir-Special Permit #0364 and #387** (91084.434 and 457)
  Approved at the 12/16/20 meeting with conditions.

- **FPL Special Permit #0415 Hall NL to 100th** (91084.485)
  Approved at the 3/23/22 meeting.

- **Ricci Residence 12745 Citrus Grove-Reconsideration SP#0423** (91084.493)
  Approved at the 9/21/22 meeting.

- **FPL Special Permit #0437 DB Margo Way** (91084.506)
  Revised permit approved at the 11/13/24 meeting.

- **ATT Directional Bore at Various Locations-Special Permit #0451** (91084.519)
  Approved at the 3/23/22 meeting.

- **Orange Plaza Parcel 6 #0453** (91084.521)
  Approved at the 5/18/22 meeting.

- **ATT Directional Bore at 61st-Special Permit #0454** (91084.522)
  Approved at the 4/27/22 meeting.

- **FPL Special Permit #0455 Hamlin** (91084.523)
  Approved at the 3/23/22 meeting.

- **FPL Special Permit #0456 44th Directional Bore** (91084.524)
  Approved at the 4/27/22 meeting.

- **FPL Special Permit #0457 85th CitGr 87th Hand Holes** (91084.525)
  Approved at the 4/27/22 meeting.

- **FPL Special Permit #0458 44th East of 140th** (91084.526)
  Approved at the 6/8/22 Board meeting.

- **PBCWUD 80th Ln N-Special Permit #0460** (91084.527)
  Approved at the 8/17/22 BOS meeting.

- **AT&T Trench along Grapeview-Special Permit #0461** (91084.528)
  Approved at the 5/18/22 Board meeting.

- **MEMORY CARE-Special Permit #0462** (91084.529)
  Approved at the 1/25/23 Board meeting.

- **FPL UNDERGROUND UG 65-Special Permit #0463** (91084.530)
  Approved at the 7/20/22 BOS meeting.

- **FPL 100th Directional Bore-Special Permit #0459** (91084.531)
  Approved at the 6/8/22 meeting.

- **FPL SPW at Key Lime-Special Permit #0464** (91084.532)
  Approved at the 7/20/22 meeting.

- **FPL UNDERGROUND UG Phases 7 to 12-Special Permit #0465** (91084.533)
  Approved at the 8/17/22 BOS meeting.

- **FPL Transfer Overhead facilities Hamlin-Special Permit #0467** (91084.535)
  Approved at the 8/17/22 BOS meeting.

- **FPL Remove 3 Wood Poles-Special Permit #0468** (91084.536)
  Approved at the 8/17/22 BOS meeting.
- **ATT Directional Bore 110th and 60th-Special Permit #0469** (91084.537)
  Approved at the 8/17/22 BOS meeting.

- **ATT Trench & Directional Bore M-1 Canal-Special Permit #0470** (91084.538)
  Approved at the 8/17/22 BOS meeting.

- **FPL SPW Rd, Lancashire-Special Permit #0471** (91084.539)
  Approved at the 8/17/22 BOS meeting.

- **FPL Mandarin-Special Permit #0472** (91084.540)
  Approved at the 9/21/22 BOS meeting.

- **FPL Remove Wood Stub Poles-Special Permit #0473** (91084.541)
  Approved at the 9/21/22 BOS meeting.

- **FPL 71st and Hall-Special Permit #0474** (91084.542)
  Approved at the 11/16/22 BOS meeting.

- **FPL 140th and Tangerine-Special Permit #0475** (91084.543)
  Approved at the 2/15/23 BOS meeting.

- **FPL Hamlin-Special Permit #0476** (91084.544)
  Approved at the 9/21/22 BOS meeting. Answered question: no extension needed.

- **FPL Temple and 80th-Special Permit #0477** (91084.545)
  Approved at the 9/21/22 BOS meeting.

- **FPL Underground Phases 13-16-Special Permit #0478** (91084.546)
  Approved at the 11/16/22 BOS meeting.

- **FPL 40th St N-Special Permit #0481** (91084.547)
  Approved at the 11/16/22 BOS meeting.

- **Comcast 140th FOC-Special Permit #0479** (91084.548)
  Approved at the 11/16/22 BOS meeting.

- **PBCWUD 89th Ln N-Special Permit #0480** (91084.549)
  Approved at the 11/16/22 BOS meeting.

- **FPL 170th -Special Permit #0482** (91084.550)
  Approved at the 11/16/22 BOS meeting.

- **FPL RPB Blvd S of 60th-Special Permit #0483** (91084.551)
  Approved at the 11/16/22 BOS meeting.
- **FPL Underground Phases 17-18-Special Permit #0485** (91084.552)
  Modification approved at the 5/17/23 meeting.

- **FPL Temple Blvd-Special Permit #0486** (91084.553)
  Approved at the 12/7/22 BOS meeting.

- **FPL Tangerine Blvd East-Special Permit #0487** (91084.554)
  Approved at the 1/25/23 Board meeting.

- **FPL Orange Gr East of M-1-Special Permit #0488** (91084.555)
  Approved at the 1/25/23 Board meeting.

- **FPL Remove 10 Poles-Special Permit #0489** (91084.556)
  Approved at the 1/25/23 Board meeting.

- **FPL Prado and Lancashire-Special Permit #0490** (91084.557)
  Approved at the 1/25/23 Board meeting.

- **FPL Hall Splice Boxes-Special Permit #0491** (91084.558)
  Approved at the 2/15/23 BOS meeting.

- **FPL Tangerine and Avocado-Special Permit #0492** (91084.559)
  Approved at the 1/25/23 Board meeting.

- **FPL RPB Blvd 40th to 54th-Special Permit #0493** (91084.560)
  Approved at the 1/25/23 Board meeting.

- **FPL Mandarin-Special Permit #0494** (91084.561)
  Approved at the 1/25/23 Board meeting.

- **FPL Tangerine at M-1 Canal-Special Permit #0495** (91084.562)
  Approved at the 1/25/23 Board meeting.

- **FPL RPB Blvd at 60th-Special Permit #0496** (91084.563)
  Approved at the 1/25/23 Board meeting.

- **FPL RPB Blvd at A Canal-Special Permit #0497** (91084.564)
  Approved at the 1/25/23 Board meeting.

- **ATT 72nd w of 140th-Special Permit #0499** (91084.567)
  Approved at the 1/25/23 Board meeting.

- **FPL Cornwall and 162nd-Special Permit #0500** (91084.568)
  Approved at the 1/25/23 Board meeting.
- **FPL Remove Poles-Special Permit #0501** (91084.569)
  Approved at the 1/25/23 Board meeting.

- **FPL Avocado Underground Phases 6 to 8-Special Permit #0502** (91084.570)
  Approved at the 3/29/23 meeting.

- **FPL Remove 2 Poles-Special Permit #0503** (91084.571)
  Approved at the 2/15/23 Board meeting.

- **FPL Riser on Tangerine Pole-Special Permit #0504** (91084.572)
  Approved at the 2/15/23 Board meeting.

- **ATT DB on Tangerine-Special Permit #0505** (91084.573)
  Approved at the 2/15/23 Board meeting.

- **FPL Remove Wood Poles Coconut and 83rd-Special Permit #0506** (91084.574)
  Approved at the 3/29/23 meeting.

- **FPL Pole & Guy Removal; 68th, 69th, Avocado-Special Permit #0507** (91084.575)
  Approved at the 3/29/23 meeting.

- **FPL Pole Removal Orange, 80th-Special Permit #0508** (91084.576)
  Approved at the 3/29/23 meeting.

- **FPL Pole Removal E Alan Black-Special Permit #0509** (91084.577)
  Approved at the 3/29/23 meeting.

- **FPL Pole Removal 6 Locations-Special Permit #0510** (91084.578)
  Approved at the 3/29/23 meeting.

- **FPL Pole Removal Orange Grove-Special Permit #0511** (91084.579)
  Approved at the 3/29/23 meeting.

- **FPL Avocado UG Phases 9 to 12-Special Permit #0512** (91084.580)
  Approved at the 5/17/23 meeting.

- **FPL Pole Removal Avocado and Banyan-Special Permit #0513** (91084.581)
  Approved at the 4/19/23 meeting.

- **FPL Remove 3 Poles Alan Black (2) and 44th-Special Permit #0514** (91084.582)
  Approved at the 4/19/23 meeting.

- **Worthy Farms Swale Fill/Driveway Permit-Special Permit #0515** (91084.583)
  On the 5/17/23 agenda for consideration. Staff recommended denial but the Board added conditions subject to legal and Board approval. The applicant's Engineer called; the applicant is considering revising the application due to the conditions. Waiting for revised plans or Applicant's Attorney.

- **Crown Castle DB on Southern Blvd-Special Permit #0516** (91084.584)
  Approved at the 5/17/23 meeting.

- **FPL Remove Pole 140th-Special Permit #0517** (91084.585)
  Approved at the 5/17/23 meeting.

- **FPL Remove 2 Poles Avocado and 85th-Special Permit #0518** (91084.586)
  Approved at the 5/17/23 meeting.

- **FPL Remove 2 Poles Hamlin-Special Permit #0519** (91084.587)
  Approved at the 5/17/23 meeting.

- **PBCWUD Water Main Orange and 110th Special Permit #0520** (91084.588)
  Received closeout documents. Project final.

- **FPL Hand Holds & Underground 61st and 67th-Special Permit #0521** (91084.589)
  Approved at the 6/7/23 meeting.

- **FPL Remove 3 Poles Stallion-Special Permit #0522** (91084.590)
  Approved at the 6/7/23 meeting.

- **FPL Remove 4 Poles -Special Permit #0523** (91084.591)
  Approved at the 7/25/23 meeting.

- **Lakeside Landing-Special Permit #0525** (91084.593)
  Approved at the 7/25/23 meeting. Answered applicants question.

- **Bountiful Gardens-Special Permit #0526** (91084.594)
  Approved at the 3/27/24 meeting.

- **FPL Poles on RPB Blvd-Special Permit #0527** (91084.595)
  Approved at the 1/17/24 BOS meeting.

- **FPL Avocado Underground 13 to 17-Special Permit #0528** (91084.596)
  Approved at the 7/25/23 meeting.

- **FPL Remove 22 Poles Add 5 Hand Holds-Special Permit #0529** (91084.597)
  Approved at the 7/25/23 meeting.

- **Planet Kids IX Addition-Special Permit #0531** (91084.599)
  Approved at the 3/27/24 meeting with notification conditions. Notifications sent.

- **Coconut Crossings-Special Permit #532** (91084.600)
  Approved at the 5/15/24 meeting. Processing roadway easement. Answered field observation question.

- **Coconut Palm Plaza-Special Permit #533** (91084.601)
  See 91084.010 above. Will process Special Permit after the WCP process. Sent minor comments to applicants engineer regarding Special Permit. Answered pipe and road cut questions.
- **FPL Remove 3 Poles-Special Permit #0534** (91084.602)
  Approved at the 9/20/23 Board meeting.

- **FPL Remove 3 Poles-Special Permit #0535** (91084.603)
  Approved at the 9/20/23 Board meeting.

- **FPL Replace 1 Pole on RPB Blvd-Special Permit #0536** (91084.604)
  Approved at the 9/20/23 Board meeting.

- **ATT DB & Trenching 180th, 67th, and L Canal-Special Permit #0538** (91084.606)
  Approved at the 12/6/23 Board meeting.

- **ATT DB on 72nd-Special Permit #0539** (91084.607)
  Approved at the 12/6/23 Board meeting.

- **PBC RPB Blvd Persimmon to 60th-Special Permit #0540** (91084.608)
  Received on 10/31/23, sent Request for Additional Information (RAI) on 1/4/24. Responded 3/12/24, there are canal alignment/encroachment issues to resolve.

- **Comcast Underground FOC on 80th-Special Permit #0541** (91084.609)
  Approved at the 1/17/24 Board meeting.

- **ATT DB on 61st-Special Permit #0542** (91084.610)
  Approved at the 2/28/24 meeting.

- **FPL New Pole on 83rd-Special Permit #0543** (91084.611)
  Approved at the 2/28/24 meeting.

- **FPL DB on Tangerine-Special Permit #0545** (91084.613)
  Approved at the 3/27/24 meeting.

- **FPL Overhead Work on 72nd-Special Permit #0546** (91084.614)
  Approved at the 3/27/24 meeting.

- **FPL E-W Roads 130th & 120th-Special Permit #0547** (91084.615)
  Approved at the 4/17/24 meeting.

- **FPL 13444 47th Bore-Special Permit #0548** (91084.616)
  Approved at the 4/17/24 meeting.

- **FPL Bore & HH on Prado-Special Permit #0549** (91084.617)
  Approved at the 4/17/24 meeting.

- **FPL wood Poles on 67th-Special Permit #0550** (91084.618)
  Approved at the 5/15/24 meeting.

- **FPL DB on 44th Pl N-Special Permit #0551** (91084.619)
  Approved at the 8/21/24 meeting.

- **FPL Pole on 82nd Rd N-Special Permit #0552** (91084.620)
  Approved at the 7/15/24 meeting.

- **IT ROADS (GL) Culvert Crossing Carol St-Special Permit #0553** (91084.621)
  Approved at the 8/81/24 meeting. Project certified and complete.

- **FPL Lines on 38th Ln N-Special Permit #0555** (91084.622)
  Approved at the 9/18/24 meeting.

- **FPL DB on 82nd Rd N-Special Permit #0556** (91084.623)
  Approved at the 9/18/24 meeting.

- **FPL DB on 90th St N-Special Permit #0557** (91084.624)
  Approved at the 9/18/24 meeting.

- **FPL SRG Overhead Service M-3 Canal-Special Permit #0558** (91084.625)
  Approved at the 12/18/24 meeting.

- **13980 89th Water Main Extension-Special Permit #0559** (91084.626)
  On the 1/15/24 agenda for the Board's consideration.

Note: These monthly reports may, at ITID Board's discretion, serve to satisfy the engineer's reporting requirements as set forth in the Florida Statutes Chapter 298.26.

Digitally signed by Jay G Foy
DN: cn=Jay G Foy, o=StormwaterJ Engineering. Inc., ou, email=jfoystormj@gmail.com, c=US
Date: 2025.01.05 14:11:37 -05'00'

Jay G. Foy, P.E.
FL Reg No 22053
CA 9484

Priority	ITID No	Roadway Section	Comment
	R-317	Turn Lanes 162nd - Loxahatchee Elementary School	Complete
1	R-308A	60th Street North (from 180th Avenue North to Mandarin Boulevard) CAPTEC Project No. 1522.025.3.4.6 ITID's Reference No. R-308A	Complete
2	R-307	180th Avenue North (from Tangerine Boulevard to 60th Street North) CAPTEC Project No. 1522.025.3.4.5 ITID's Reference No. R-307	Complete
3	R-302	Hamlin Boulevard (from 190th Street North to Calamondin Boulevard) CAPTEC Project No. 1522.025.3.4.1 ITID's Reference No. R-302 (Bid and Build with R-303)	Complete
4	R-303	Hamlin Boulevard (from Calamondin Boulevard to 180th Avenue North) CAPTEC Project No. 1522.025.3.4.2 ITID's Reference No. R-303 (Bid and Build with R-302)	Complete
5	R-313	140th Avenue North (from Orange Boulevard to 61st Street North) CAPTEC Project No. 1522.3.4.8 ITID's Reference No. R-313 Bid with R-314 and R-315 South Part: 140th Avenue N (from 61st Street North to Tangerine Boulevard) Construct South Part First with R-314 below. North Part: 140th Avenue N (from Tangerine Boulevard to Orange Boulevard) Construct North Part with R-315 below.	Awarded, Start date 1/6/24
6	R-314	61st Street North (from 140th Avenue North to Avocado Boulevard) CAPTEC Project No. 1522.3.4.9 ITID's Reference No. R-314 Bid with R-313 and R-315 Construct First with South Part of R-313	Awarded, Start date 1/6/24
7	R-306	Tangerine Boulevard (from 140th Avenue North to Avocado Boulevard) CAPTEC Project No. 1522.025.3.4.10 ITID's Reference No. R-315 Bid with R-313 and R-314 Construct Second with North Part of R-313	Awarded, Start date 1/6/24

8	R-306	Tangerine Boulevard (from 180th Avenue North to Mandarin Boulevard) CAPTEC Project No. 1522.3.4.4 ITID's Reference No. R-306 Bid with R-309; Construct when school is out – Summer of 2024	Survey & Geotechnical complete Engineering design in progress
9	R-309	CAPTEC Project No. 1522.3.4.7 89th Place N (from Hall Blvd to Hamlin Park) ITID's Reference No. R-309 Bid with R-306	Construction by ITID Complete

10	R-305	180th Avenue North (from Hamlin Boulevard to Tangerine Boulevard) CAPTEC Project No. 1522.3.4.3 ITID's Reference No. R-305 May have bonding requirements	Survey & Geotechnical complete Engineering design underway Problems with ROW at schools and north Coordinating with School and GL for ROW Delayed

AGENDA ITEM NO. 14.3

INDIAN TRAIL
IMPROVEMENT DISTRICT
EST. 1957

Executive Summary

REGULAR MEETING BOARD OF SUPERVISORS

DATE:	January 15, 2025
SUBMITTED BY:	Scarlet Cantley
DEPARTMENT:	Administration
ITEM TYPE:	Reports
AGENDA SECTION:	**REPORTS (File and Receive)**
SUBJECT:	AED Report
BACKGROUND:	
FISCAL IMPACT:	
RECOMMENDATION:	Motion to File and Receive

ATTACHMENTS:
AED BOS REPORT JAN 2025.docx

R-307 / R-308A 60th - 180th
Awaiting final completion deliverables.

R-302 / R-303 Hamlin 190th - 180th
Driveway aprons will be reworked on two drives and Punchlist ADA mats per walk thru. Final Completion TBD.

R-313 / R-314 / R-315 140th - Tangerine - 61ST St. N.
Contract start date of Jan 6, 2024. with 210 day duration. Easement staking complete, dozen + properties have encroachments ranging from 6 inches to 2 feet. Notices mailed and gate hangers hung. Staff dewatered and performed video inspection of existing culvert under Tangerine. No data could be found to confirm date of replacement. Item is currently being reviewed by engineering. Contractor will be using the southern most portion of ACPS south of electrical building as temporary staging area.

SRG Unit 20
Routine maintenance of Carrol St. is once per week or as needed for rain events. Marie, Simon and Antoinette are every 3 weeks or as needed. Bedu is as needed/requested. Bedu Ct. was widened slightly with existing onsite material to accommodate trash pick up. SWA will be contacted to see if roadway is safe for trash truck. It is now the same width as Simone so it should not be an issue. Maire Ct. being subgraded and swales installed with onsite material from canal bank excess from P/L canal relocation. Marie was done first as it needed to be hardened once construction of pumpstation commences.

M1 Impound Expansion
Geotechnical work is complete, awaiting final report from engineer to begin design and permitting.

M2 By-Pass
Mobilization and material delivery is anticipated for Feb 1 start. Staff will notify residents living along Dellwood Blvd as all traffic, district staff construction, will have to access the Impound from the north. The work will cut the existing access from 180th Ave. Dellwood will be put on a routine maintenance schedule until a time where traffic can be routed safely from 180th. Ave. During such time there will be no outside trucking deliveries of materials to the site. District traffic will also be limited during construction.

AGENDA ITEM NO. 14.4

INDIAN TRAIL
IMPROVEMENT DISTRICT
EST. 1957

Executive Summary

REGULAR MEETING BOARD OF SUPERVISORS

DATE:	January 15, 2025
SUBMITTED BY:	Jason Lester
DEPARTMENT:	Operations and Maintenance
ITEM TYPE:	Reports
AGENDA SECTION:	**REPORTS (File and Receive)**
SUBJECT:	Operations and Maintenance Report
BACKGROUND:	
FISCAL IMPACT:	
RECOMMENDATION:	Receive and File

ATTACHMENTS:
2024-12 O&M Monthly Report.pdf
Key Lime btw 180th and Mandarin - December 2024 - Combined.pdf

OPERATIONS & MAINTENANCE
Monthly Report

INDIAN TRAIL IMPROVEMENT DISTRICT
Est. 1957

To: Board of Supervisors

From: Jason Lester, Chief Operating Officer

Date: January 6th, 2024

Subject: Operations Monthly Report: December 1st to December 31st

Hurricane Milton Recovery – FEMA DR-4834-FL

District staff performed Hurricane Milton storm prep activities (Category B Emergency Protective Measures) from 10/4 to 10/09/24 which included pre-storm drawdown and operational activities (activity summary attached). On the evening of 10/9/24, Hurricane Milton produced several tornadoes in Palm Beach County. One tornado entered ITID at 40th ST N (between 140th Ave N and Avocado BLVD) and exited ITID 5.5 miles north at Hamlin BLVD (near Coconut BLVD), damage path shown below. This tornado was estimated to be an EF3 measuring 300yds wide per PBC EOC. ITID Staff performed emergency road clearing (Category B Emergency Protective Measures) from 10/10 to 10/12/24. From 10/14/24 to 10/24/24, District staff performed debris removal activities (Category A Debris Removal) along ITID canal waterways (flood control works). Hazardous limbs, trees, and stumps were removed to prevent injury, property damage, and canal obstructions; in the interest of public safety. Approximately 50 loads (18cy dump truck) totaling 900cubic yards of debris was removed from District canal banks and roadways. This amount does not include debris on private property that was removed by SWA. ITID road, swale, and canal damage caused by Hurricane Milton and Milton cleanup was inventoried during the month of November. Total damage cost estimate is around $800,000 including Coconut Park.

FEMA has authorized Public Assistance in PBC for Categories A (Debris Removal) and B (Emergency Protective Measures). Other permanent repairs (roads, water control structures, public buildings, parks) were also authorized by FEMA. FEMA kickoff meeting held on 12/5/24. Follow-up meeting to finalize damage inventory and grant approval scheduled for 12/9/25.

Hurricane Milton Tornado Damage Path (approximation)

Drone footage: https://youtu.be/7F-oQdPvh5c?si=NCu_asa8ErWM05HP

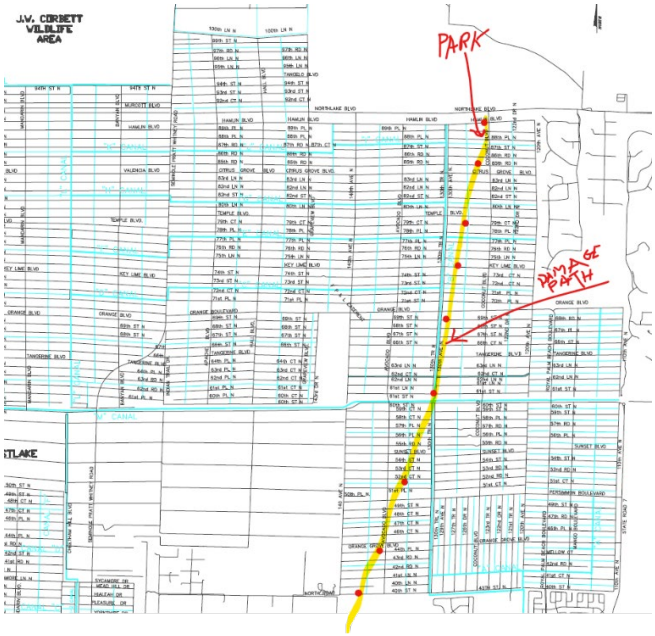

Milling Road Operations
District crews field surveyed property corners, realigned roads, relocated mailboxes, checked swales for positive drainage, cut down existing dirt road to subgrade, exported rock/dirt to other local dirt roads requiring repair, imported/placed 650tons of recycled asphalt millings (per .25 mile), graded/compacted millings to above 95% compaction per FDOT specifications, installed milling aprons at each driveway, and sealed millings per FDOT standards. Location and status of milling road projects is as follows:

New Milling Road – 68th west 120th (**.25-mile road**) – Project commenced in November and was completed in December.
New Milling Road – 67th west 120th (**.25-mile road**) – Project commenced in November and was completed in December.
New Milling Road – 66th west 120th (**.25-mile road**) – Project completed in December
New Milling Road – 63rd west 120th (**.25-mile road**) – Project completed in December
New Milling Road – 42nd east Mango (**.25-mile road**) – Project completed in December
New Milling Road – 42nd west Mango (**.25-mile road**) – Project completed in December

R3 Milling Roads Status and Schedule
180th from Alan Black to Sycamore (**1 mile**) – COMPLETED January 2023.
Hamlin from Hall to Hamlin Park (**.25 mile**) – COMPLETED March 2023.
Calamondin from Hamlin to 94th (**.5 mile**) – COMPLETED July 2023.
180th from Hamlin to 94th (**.5 mile**) – COMPLETED January 2024.
73rd from SPW to Kidscape (122 feet) – Postponed until SPW road widening completed.
74th from SPW to Kidscape (352 feet) – Postponed until SPW road widening completed.

R3 Asphalt Road Constructed by ITID Staff – COMPLETED December 2024.
89th from Hall to Hamlin Park (**.25 mile**) – Project scope includes ITID staff construction of new drainage swales, 5ft sidewalk, 5" milling subbase, and 1 ¾" asphalt surface. Jobsite layout and equipment mobilized the week of 7/29/24. Crew completed drainage pipe installation, new sidewalk base construction, and drainage swale rough-in. New sidewalk and driveways paved in September. Drainage swales completed in October after Hurricane Milton storm recovery. Asphalt milling road subbase completed in November. Road paving and project completion achieved in December.

Asphalt Road and Sidewalk Operations
Road Paving – 89th from Hall to Hamlin Park (**.25 mile**) – New road and sidewalk paved at the Project completed in December.

New Sidewalk Installation – Key Lime east of 130th to Coconut – Existing sidewalk removed, sub-base prepped, and paved in December.

Asphalt Road Pothole Repair – Asphalt road potholes sawcut and compacted per FDOT standards at various locations throughout District.

Dirt Road Operations
Five (5) motor graders continued performing routine maintenance grading throughout the District (262 miles of dirt roads as of 1/1/2025). Each road graded once every 10 to 13 working days. Main through dirt roads are graded every Monday. Graders also perform road repairs with the rock/dirt hauled off of milling projects.

PB Agg rock material ordered and hauled to roads throughout the District. Box blade tractor and contract hauling dedicated to assisting with dirt road repair.

Drainage Swale Operations
New Driveway Stake Outs and Inspections – 20+ new driveway stake outs performed during the month.

67th west Banyan – .5 mile Road & Swale Reconstruction – Easement cleared of trees. Road realigned to proper location. Drainage swales reconstructed for positive drainage. Driveway drainage pipes reset to proper elevations to eliminate drainage impediments. Work commenced in August and remains ongoing. No work in October – November due the Hurricane Milton Tornado recovery activities. Project completion scheduled for January.

Canal Culvert Operations
Culvert Replacement – From May 2023 through July 2024, the culvert crew was reassigned to Santa Rosa Groves Capital Improvement Project. Please reference the Assistant Director Report for work activities and project updates. Culvert crew returned to M1 and M2 Basin projects as of August 2024.

Culvert Replacement – Avocado between 77th and 78th – Crew mobilized to site the week of 11/4. Existing metal culverts, 2ea, replaced with 60" diameter HDPE 100 year pipe. Bank stabilization and finish grading completed. Asphalt roadway and sidewalk replaced. Project completed in December.

Culvert Replacement – Temple between 130th and Coconut BLVD – Crew mobilized to site the week of 12/5. Existing metal culvert replaced with 60" diameter HDPE 100 year pipe. Bank stabilization and finish grading completed. Project scheduled for completion in January with the asphalt roadway and sidewalk placement.

Canal Bank Operations
62nd Ln east 130th (north road and south road from 130th to 120th, **2 miles total**) – Layout and construct new drainage swale. Project started in January. Fill material and rip rap placed to reconstruct canal bank beginning at 130th extending eastward on south bank. This was done to realign the roadway and swale to be within the road and drainage easement. Work remains ongoing east of Coconut.

Signage Operations
Signage – PBC no longer providing street signs as of May 2024. ITID continues to purchase road signage needed to replace damaged and worn signs.

Traffic Control Operations
Traffic Study of Key Lime east of 180th
Oct – Nov 2024 (506 vehicles per day average) - Traffic Data Report shows that an average of 221 vehicles travel eastbound per day at an average speed of 37 mph (30 mph speed limit). An average of 285 vehicles travel westbound per day at an average speed of 34 mph (30 mph speed limit).

Fleet Operations
General preventative maintenance and repairs continue. Work orders shown below:

Ticket ID	District Vehicles/Equipmen	Time In	Time Out	Work Request	Notes
241024-034755	BH-13 Back-Hoe 2015 John Dee	10/24/2024	11/30/2024	AC not blowing cold Gauge completely upside down clam bucket opening while raising boom	 Service transmission oil had Dobbs come fix screen display Fix/replace D-10 Spring
291024-150136	MG-7 Grader 2013 John Deere 6	11/4/2024	11/4/2024	long side shift Cylinder rebuild.	Remove and rebuild cylinder
041124-164306	BH-8 Back-Hoe 2005 Case 580 S	10/28/2024	11/4/2024	Right side lift loader cylinder leaking from seals would	Remove and rebuild leaking cylinder.
041124-164705	FM-1 Flat Mower 2008 John Dee	10/31/2024	11/4/2024	damage to plastic cover on rear lift levers	remove and replace broken plastic cover
051124-094259	MG-23 Grader 2023 John Deere	11/4/2024	11/4/2024	service past due	service machine
061124-160819	FM-3 Flat Mower 2008 John Dee	11/6/2024	11/6/2024	missing deck pins blades are worn down	Replace missing pins change worn blades install new ones
061124-161952	SS-3 SKID STEER 2017 Bobcat T	11/6/2024	11/6/2024	Jack hammer for skid-steer leaking and hose touching	loosen hose and fitting to correct issue
121124-074137	PK-8 Truck 2013 Ford F-250 4X4	11/12/2024	11/12/2024	transmision not shifting cable not working truck at pump station	due to faulty brake switch not releasing shifter the shift cable was broke by force . replace brake switch replace shifter cable dustin and alex road call
141124-114611	M-37 Truck 2023 Ford F-250 XL 4	11/14/2024	11/14/2024	service due	service completed
141124-124610	M-13 Truck 2001 Ford F-250 4X4	11/14/2024	11/18/2024	walk behind saw not rolling straight and guide is bent	straighten back guide front wheel. Also, handlebars fix

Storm Water Management

Water Elevations

Dry season control elevations M-1 basin 17.0’ and M-2 basin 17.0’

Current Elevations:

M1 upper basin 17.3’

M1 lower basin 17.1’

M2 basin 15.4’

M2 Canal 12.5’

Corbett 20.4’

SRG 17.3’

CGCDD 16.9’

The average rainfall for December was 2 inches.

Total average rainfall for 2024 was 56.6 inches.

Pump Operations

Staff - Routine maintenance of pump stations and control structures include pump startups, mowing, housekeeping, equipment servicing, daily logs, and inspections.

Continue monitoring water levels daily.

Continue monitoring ground water monthly.

Continue monitoring Corbett levels 1 time per month and as needed.

Continue monitoring SRG/CGCDD levels 1 time per month and as needed.

Aquatic Weed Control Report

Treatments for Grasses and water lilies in zones 2

10.5 acers treated.

Working Supervisor Applicator 35.5 work hours.

Laborers 0 hours.

AVC canal restoration

Working supervisor / Applicator 80 work hours

Laborers 121 hours total

Treatments with tree and shrubbery removal zones 1,2 and 3

NPDES

Tracking trash pick-ups; performing inspections on pipes and structures, and stations in conjunction with the NPDES Permit.

Mowing

Boom mowers on canals in zone 4.
Boom mower cutback zone sidewalks and schools.
Flat deck mowers are mowing canals in zones 4 and SRG.
Big boom (maverick) M-0 canal and special requests

Average Vehicle Count

Technician Name: administrator

Location: Key Lime BLVD btw 180th & Mandarin - Facing East
Report Period: 11/25/2024 to 12/29/2024
Address: 17729 Key Lime BLVD, Loxahatchee, FL, USA, 33470
Total Vehicle Count: 9,623
Speed Limit: 30

Hour	Monday	Tuesday	Wednesday	Thursday	Friday	Saturday	Sunday	Average Weekday	Average Weekend	Average Week	Average Speed	85% Speed
00-01	1	2	2	1	2	1	3	2	2	2	40	47
01-02	0	0	1	0	1	1	3	0	2	1	34	43
02-03	0	0	0	0	0	1	4	0	3	1	36	42
03-04	1	2	1	3	1	2	1	2	2	2	33	44
04-05	1	0	2	1	1	1	1	1	1	1	38	42
05-06	1	0	2	1	1	1	1	1	1	1	36	44
06-07	4	3	4	5	2	1	1	4	1	3	33	42
07-08	H 36	H 30	28	H 30	29	11	2	31	7	24	32	42
08-09	18	16	16	20	15	11	7	17	9	15	30	43
09-10	20	18	19	23	24	11	9	21	10	18	33	43
10-11	12	11	12	10	13	19	11	12	15	13	27	41
11-12	11	9	12	11	16	11	H 22	12	17	13	32	43
12-13	11	18	11	15	16	21	15	14	18	15	31	42
13-14	30	18	22	22	22	20	16	23	18	21	35	43
14-15	27	18	21	24	24	H 24	15	23	20	22	32	42
15-16	22	21	26	29	29	22	19	25	21	24	33	43
16-17	31	26	H 33	H 30	H 30	23	16	30	20	27	34	43
17-18	31	26	30	27	26	19	18	28	19	25	33	43
18-19	16	22	18	21	17	14	18	19	16	18	35	42
19-20	14	12	12	12	13	11	9	13	10	12	36	43
20-21	10	14	12	11	12	10	9	12	10	11	34	43
21-22	11	8	8	9	11	7	5	9	6	8	35	43
22-23	4	4	6	6	7	8	3	5	6	5	37	44
23-24	2	2	1	2	5	5	3	2	4	3	38	46
TOTAL:	**314**	**280**	**299**	**313**	**317**	**255**	**211**	**306**	**238**	**285**	**34**	**43**

Statistics Summary Report

Technician Name: administrator

Location: Key Lime BLVD btw 180th & Mandarin - Facing East

Address: 17729 Key Lime BLVD, Loxahatchee, FL, USA, 33470

Speed Limit: 30

Report Period: 11/25/2024 to 12/29/2024

Total Vehicle Count: 9,623

Hour	Total Vehicles	Average Vehicles	Total Violations	% Violations	Min. Speed	Max. Speed	Avg. Speed	85% Speed
00-01	50	7	47	94 %	14	52	40	47
01-02	34	5	22	65 %	3	54	34	43
02-03	32	5	19	59 %	3	45	36	42
03-04	48	7	34	71 %	3	53	33	44
04-05	31	4	27	87 %	11	43	38	42
05-06	27	4	21	78 %	4	62	36	44
06-07	103	15	74	72 %	3	52	33	42
07-08	796	114	675	85 %	3	60	32	42
08-09	495	71	329	66 %	3	61	30	43
09-10	600	86	456	76 %	3	62	33	43
10-11	427	61	229	54 %	3	66	27	41
11-12	454	65	299	66 %	3	61	32	43
12-13	524	75	333	64 %	3	60	31	42
13-14	721	103	535	74 %	3	58	35	43
14-15	762	109	508	67 %	3	68	32	42
15-16	842	120	631	75 %	3	57	33	43
16-17	947	135	739	78 %	3	60	34	43
17-18	828	118	608	73 %	3	63	33	43
18-19	593	85	479	81 %	3	66	35	42
19-20	391	56	323	83 %	3	67	36	43
20-21	363	52	270	74 %	3	56	34	43
21-22	280	40	217	78 %	3	63	35	43
22-23	180	26	152	84 %	3	60	37	44
23-24	95	14	76	80 %	9	58	38	46
	9,623	**1,377**	**7,103**	**74 %**	**4**	**59**	**34**	**43**

Count by Speed Bins

Speed	Count
0...1	0
1...2	0
2...3	140
3...4	286
4...5	64
5...6	136
6...7	96
7...8	42
8...9	86
9...10	36
10...11	70
11...12	95
12...13	47
13...14	99
14...15	49
15...16	70
16...17	63
17...18	54
18...19	72
19...20	35
20...21	71
21...22	90
22...23	32
23...24	96
24...25	101
25...26	47
26...27	109
27...28	66
28...29	152
29...30	216

Count by Speed Bins

Speed	Count
30...31	122
31...32	327
32...33	195
33...34	509
34...35	564
35...36	307
36...37	694
37...38	384
38...39	750
39...40	761
40...41	330
41...42	645
42...43	436
43...44	150
44...45	247
45...46	107
46...47	165
47...48	119
48...49	45
49...50	74
50...51	27
51...52	37
52...53	38
53...54	9
54...55	18
55...56	10
56...57	6
57...58	9
58...59	1
59...60	4

Count by Speed Bins

Speed	Count
60...61	3
61...62	4
62...63	2
63...64	0
64...65	0
65...66	2
66...67	1
67...68	1
Total:	**9,623**

Average Vehicle Count
Hourly Values

Key Lime BLVD btw 180th & Mandarin - Facing East (17729 Key Lime BLVD, Loxahatchee, FL, USA, 33470)
11/25/2024 to 12/30/2024

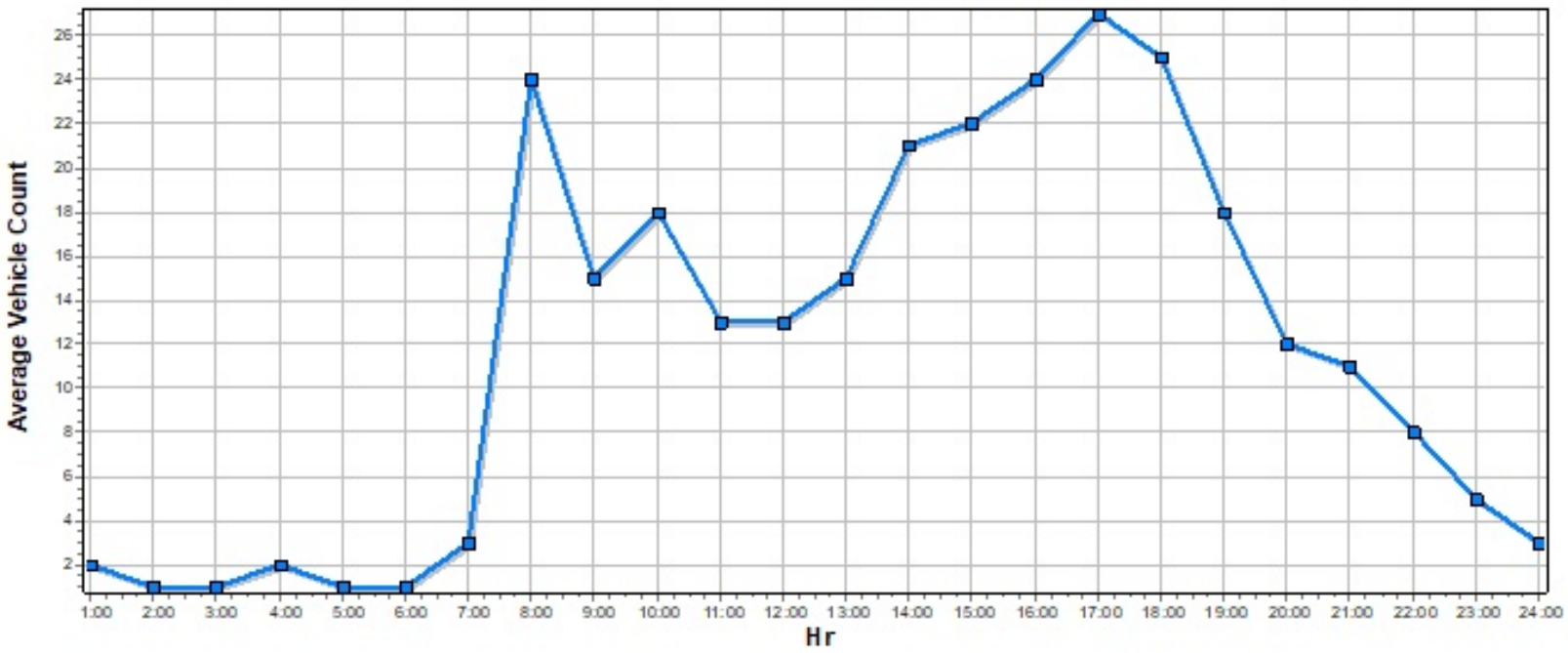

Average Vehicle Count

Technician Name: administrator

Location: Key Lime BLVD btw 180th & Mandarin - Facing West
Report Period: 11/26/2024 to 12/29/2024
Address: 17729 Key Lime BLVD, Loxahatchee, FL, USA, 33470
Total Vehicle Count: 7,194
Speed Limit: 30

Hour	Monday	Tuesday	Wednesday	Thursday	Friday	Saturday	Sunday	Average Weekday	Average Weekend	Average Week	Average Speed	85% Speed
00-01	1	0	1	0	1	1	1	1	1	1	39	45
01-02	0	0	1	0	0	0	1	0	1	0	39	43
02-03	0	1	0	0	1	0	1	0	1	0	37	44
03-04	2	0	1	2	1	1	0	1	1	1	35	40
04-05	2	0	2	1	2	1	1	1	1	1	40	49
05-06	7	5	4	5	4	3	1	5	2	4	38	45
06-07	16	19	17	14	14	4	4	16	4	13	38	45
07-08	31	H 34	30	H 28	25	10	5	30	8	23	37	42
08-09	16	15	16	15	24	9	8	17	9	15	38	43
09-10	21	18	22	20	24	10	8	21	9	18	37	43
10-11	11	8	7	8	13	11	11	9	11	10	35	43
11-12	10	11	11	11	15	10	11	12	11	11	35	42
12-13	10	11	12	11	13	12	H 16	11	14	12	36	43
13-14	10	9	9	10	12	10	11	10	11	10	36	43
14-15	26	19	24	22	26	10	11	23	11	20	36	43
15-16	15	18	14	15	15	10	11	15	11	14	36	43
16-17	H 36	31	H 31	27	H 34	H 13	9	32	11	26	36	42
17-18	13	17	15	14	14	11	12	15	12	14	35	42
18-19	10	6	10	11	13	9	10	10	10	10	36	43
19-20	8	5	8	6	8	7	4	7	6	7	36	44
20-21	3	3	5	5	7	6	5	5	6	5	35	43
21-22	4	3	3	4	4	3	3	4	3	3	35	42
22-23	4	2	3	1	3	2	1	3	2	2	35	45
23-24	1	1	1	2	1	2	1	1	2	1	36	45
TOTAL:	**257**	**236**	**247**	**232**	**274**	**155**	**146**	**249**	**158**	**221**	**37**	**43**

Statistics Summary Report

Technician Name: administrator

Location: Key Lime BLVD btw 180th & Mandarin - Facing West

Address: 17729 Key Lime BLVD, Loxahatchee, FL, USA, 33470

Speed Limit: 30

Report Period: 11/26/2024 to 12/29/2024

Total Vehicle Count: 7,194

Hour	Total Vehicles	Average Vehicles	Total Violations	% Violations	Min. Speed	Max. Speed	Avg. Speed	85% Speed
00-01	22	3	19	86 %	25	52	39	45
01-02	11	2	7	64 %	22	50	39	43
02-03	16	2	12	75 %	18	55	37	44
03-04	33	5	25	76 %	19	42	35	40
04-05	39	6	37	95 %	17	53	40	49
05-06	131	19	111	85 %	16	57	38	45
06-07	387	55	346	89 %	15	62	38	45
07-08	715	102	644	90 %	16	58	37	42
08-09	472	67	414	88 %	15	66	38	43
09-10	571	82	493	86 %	16	67	37	43
10-11	333	48	237	71 %	15	53	35	43
11-12	385	55	282	73 %	15	99	35	42
12-13	401	57	303	76 %	16	65	36	43
13-14	342	49	259	76 %	15	70	36	43
14-15	645	92	524	81 %	15	58	36	43
15-16	458	65	344	75 %	15	64	36	43
16-17	833	119	676	81 %	15	80	36	42
17-18	451	64	352	78 %	15	78	35	42
18-19	330	47	259	78 %	15	57	36	43
19-20	222	32	172	77 %	16	58	36	44
20-21	166	24	116	70 %	15	57	35	43
21-22	117	17	85	73 %	16	51	35	42
22-23	72	10	53	74 %	15	53	35	45
23-24	42	6	28	67 %	20	51	36	45
	7,194	**1,028**	**5,798**	**79 %**	**17**	**61**	**37**	**43**

Count by Speed Bins

Speed	Count
0...1	0
1...2	0
2...3	0
3...4	0
4...5	0
5...6	0
6...7	0
7...8	0
8...9	0
9...10	0
10...11	0
11...12	0
12...13	0
13...14	0
14...15	24
15...16	62
16...17	68
17...18	38
18...19	70
19...20	36
20...21	71
21...22	79
22...23	36
23...24	98
24...25	97
25...26	50
26...27	140
27...28	72
28...29	195
29...30	260

Count by Speed Bins

Speed	Count
30...31	158
31...32	350
32...33	214
33...34	491
34...35	526
35...36	322
36...37	556
37...38	254
38...39	565
39...40	528
40...41	211
41...42	430
42...43	345
43...44	137
44...45	195
45...46	79
46...47	126
47...48	91
48...49	39
49...50	45
50...51	22
51...52	36
52...53	26
53...54	10
54...55	12
55...56	3
56...57	6
57...58	9
58...59	0
59...60	2

Count by Speed Bins

Speed	Count
60...61	0
61...62	2
62...63	0
63...64	1
64...65	1
65...66	1
66...67	1
67...68	0
68...69	0
69...70	1
70...71	0
71...72	0
72...73	0
73...74	0
74...75	0
75...76	0
76...77	0
77...78	1
78...79	0
79...80	1
80...81	0
81...82	0
82...83	0
83...84	0
84...85	0
85...86	0
86...87	0
87...88	0
88...89	0
89...90	0

Count by Speed Bins

Speed	Count
90...91	0
91...92	0
92...93	0
93...94	0
94...95	0
95...96	0
96...97	0
97...98	0
98...99	1
Total:	**7,194**

Average Vehicle Count
Hourly Values

Key Lime BLVD btw 180th & Mandarin - Facing West (17729 Key Lime BLVD, Loxahatchee, FL, USA, 33470)
11/25/2024 to 12/30/2024

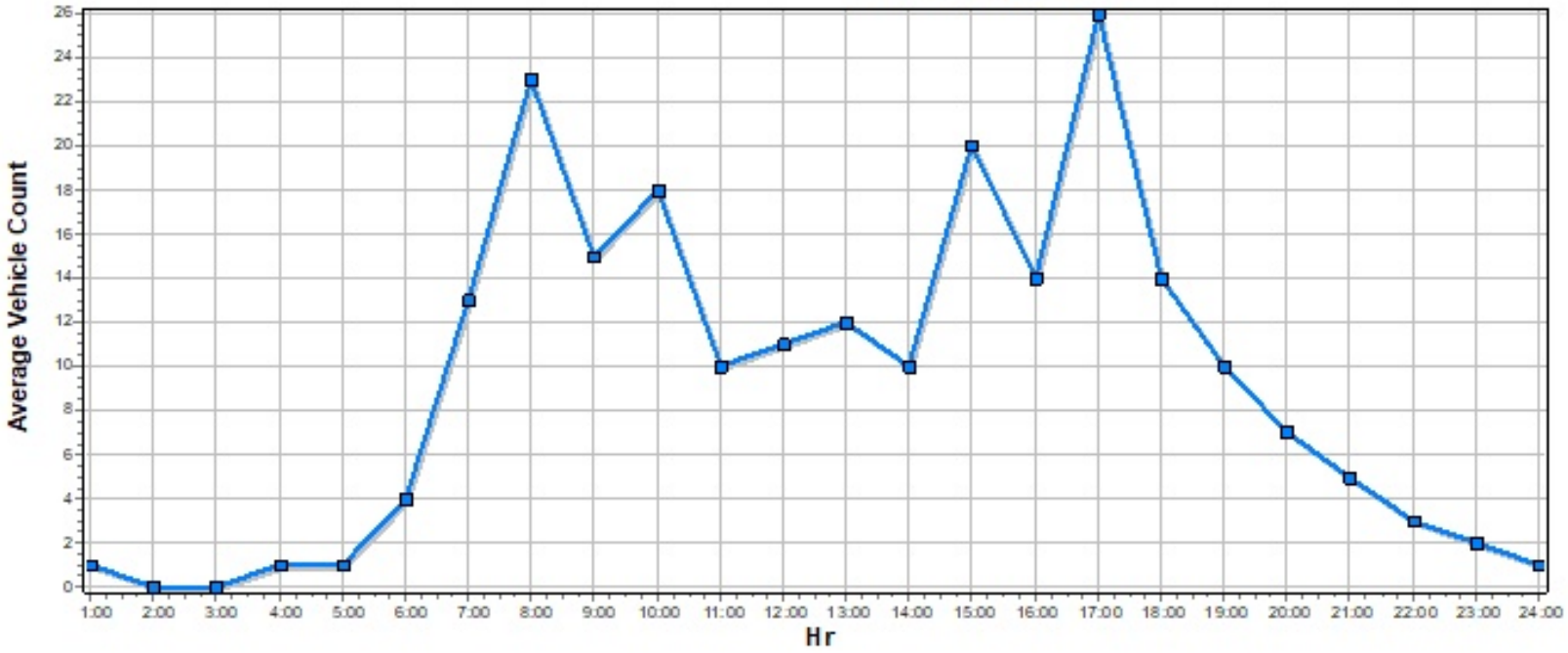

AGENDA ITEM NO. 14.5

Executive Summary

REGULAR MEETING BOARD OF SUPERVISORS

DATE: January 15, 2025

SUBMITTED BY: Kenny Lawrence

DEPARTMENT: Parks

ITEM TYPE: Reports

AGENDA SECTION: **REPORTS (File and Receive)**

SUBJECT: Parks and Recreation Report.

BACKGROUND: **Hamlin House Usage Month of December 2025**

- 2

Park Reservations for the Month of December 2025

- Nicole Hornstein Equestrian Park – 0
- Acreage Community Park- 0
- Acreage Community Park South- 0
- Kidscape – 0
- Downers – 0
- Hoefl – 1
- Sycamore – 0
- Temple – 0
- Citrus – 1

Parks Maintenance

Juniper is treating Acreage Community Park North Athletic Campus's athletic fields while the park is closed through December 31st, 2024.

Juniper is continuing to replace dead or damaged plants at the Garden of Hope.

Juniper is continuing treating the baseball fields for weeds and will be replacing the missing sod areas that were overgrown with weeds with fresh sod.

Staff have been preparing Nicole Hornstein Equestrian Park and the Hamlin House for the upcoming Holiday event scheduled for December 14th, 2024.

Bob Hoefl: Installed new camera security system.

Acreage Community Park South Expansion: Surveys and Geotech inspections are complete. Engerineering is complete and permitting has begun for the artificial turf field.

Coconut Park completed projects:
Replaced the pier.
Replaced the fountain.
Replaced the stairway.
Repaired nonfunctioning irrigation system.

Hurricane Milton/Tornado damage at Coconut Park:

*****Currently in application process with FEMA*****

After meeting with Juniper on site and assessing the damages at Coconut Park we feel the estimated repair costs are as follows:

<u>*Price includes material and labor unless otherwise specified.</u>

35 Mature trees - $4,000 each. Total $140,000

20 Palm trees - $1,500 each. Total $30,000

Misc. shrubs and hedges - Total $25,000

Removal and replacement of grass including min. 2” soil removal due to unknown debris within the soil. Est. 240,000 S.F. @ $.30 per S.F. - Total $72,000

Repair damaged irrigation - Total $5,000

Pier (contracted price for complete replacement, including pilings due to twisting and uplift from the tornado) - Total $105,000

Walkway 3,000 linear feet @ $10 per linear foot (inhouse pricing) - Total $30,000

Exercise Equipment - Total $25,000

New Signs - Total $20,000

Misc. Equipment rental and labor for site prep - Total $65,000

TOTAL ESTIMATE PROJECT VALUE: $517,000.00

Recreation Programming

- Fishing at the M1 Impoundment continues.
- Archery Classes continue at the Hamlin House.

Completed Events

- Santa's Magical North Pole Excursion - December 14th, 2024
- Archery - January 4th, 2025
- Fishing at M1 - January 5th, 2025

Upcoming Events

- Fishing at M1 - February 1st, 2025
- Archery - February 2nd, 2025

FISCAL IMPACT: N/A

RECOMMENDATION: It is recommended the board receive and file.

ATTACHMENTS:

AGENDA ITEM NO. 14.6

INDIAN TRAIL
IMPROVEMENT DISTRICT
EST. 1957

Executive Summary

REGULAR MEETING BOARD OF SUPERVISORS

DATE:	January 15, 2025
SUBMITTED BY:	Heide Garcia
DEPARTMENT:	Administration
ITEM TYPE:	Reports
AGENDA SECTION:	**REPORTS (File and Receive)**
SUBJECT:	Records Requests
BACKGROUND:	We received 6 records requests.
FISCAL IMPACT:	None.
RECOMMENDATION:	Staff Recommends Board Members Receive and File the attached Records Request.

ATTACHMENTS:
2024.12.05 CUMPA RECORD REQUEST.pdf
2024.12.05 CUMPA RECORD REQUEST RESPONSE.pdf
2024.12.05 ARGUE RECORD REQUEST.pdf
2024.12.10 ARGUE RECORD REQUEST RESPONSE.pdf
2024.12.05 FARRELL REQUEST.pdf
2024.12.19 FARRELL RECORD REQUEST RESPONSE.pdf
2024.12.16 SIMPSON RECORD REQUEST.pdf

2024.12.19 SIMPSON RECORD REQUEST RESPONSE.pdf
2024.12.23 RICHARD RECORD REQUEST.pdf
2024.12.23 RICHARD RECORD REQUEST RESPONSE..pdf
2024.12.23 ASHURST RECORD REQUEST.pdf
2025.01.06 ASHURST RECORD REQUEST RESPONSE..pdf

Outlook

RECORDS REQUEST CANAL (M-1) ITID - PROJECT 2411ACJX

From Yanet Cumapa <ycumapa@telcoprom.com>
Date Thu 12/5/2024 8:48 AM
To info <info@indiantrail.com>
Cc Lenin Cumapa <lcumapa@telcoprom.com>

Some people who received this message don't often get email from ycumapa@telcoprom.com. Learn why this is important

Good morning,

There is a channel I would like information on to see if it is possible to install subway fiber.

- Could you please provide us with the channel design section and as-built records.
- Could you please provide any utility records available in the area (water, sewer, gas, etc..) so we can include them in our proposed design?

Channel of interest:
M-1 (ITID) channel along **OKEECHOBEE BLVD**, nearest intersection is **CIVIC CENTER WAY** and **CRESTWOOD BLVD N**. (Right-of-Way channel and cross section).

Please see the attached images for reference and the proposed construction route.

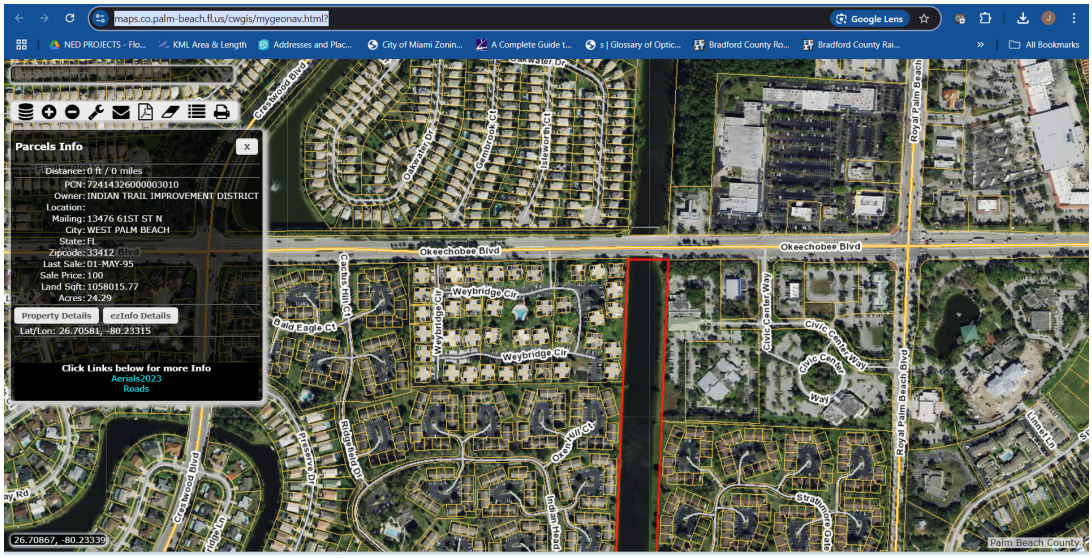
maps.co.palm-beach.fl.us/cwgis/mygeonav.html?
Parcels Info
Distance: 0 ft / 0 miles
PCN: 72414326000003010
Owner: INDIAN TRAIL IMPROVEMENT DISTRICT
Location:
Mailing: 13476 61ST ST N
City: WEST PALM BEACH
State: FL
Zipcode: 33412
Last Sale: 01-MAY-95
Sale Price: 100
Land Sqft: 1058015.77
Acres: 24.29
Property Details
ezInfo Details
Lat/Lon: 26.70581, -80.23315
Click Links below for more Info
Aerials2023
Roads
Okeechobee Blvd
Weybridge Cir
Bald Eagle Ct
Royal Palm Beach
Civic Center Way
Royal Palm Beach Blvd
Palm Beach County
26.70867, -80.23339

Thank you.

Outlook

Re: RECORDS REQUEST CANAL (M-1) ITID - PROJECT 2411ACJX

From Heidi Garcia <hgarcia@indiantrail.com>
Date Thu 12/5/2024 10:05 AM
To Yanet Cumapa <ycumapa@telcoprom.com>
Cc Lenin Cumapa <lcumapa@telcoprom.com>; Customer Relations <CustomerRelations@indiantrail.com>

1 attachment (471 KB)
1969_0100_Inverted Siphon_M-1 Canal.pdf;

Good Morning,

Hope this email finds you well. I spoke with out engineer, please see attached, and the answers to the questions requested. Please let us know if you have any questions or concerns.

In response to the below:

1. Please find attached the design drawing. Okeechobee Blvd is where the canal reach changes from “E” to “F”, but the depth of the canal is the same (20.2’).
2. We do not current have “as-builts” and anything we may find would be from the 80’s and out of date.
3. ITID’s guidelines for directional bore require the utility to be 6.0’ below the design bottom of the canal. This results in a depth of 20.6’ from natural ground. At the time of the design, the generalized topo in the area was around 18.0’ NGVD (16.5’ NAVD). This results in requiring the utility to be at or below negative (-) 8.02’ NGVD or -9.7’ NAVD.
4. ITID doesn’t have any utilities in the area but we do have a telemetry site that is visible.

Kind Regards,
Heidi Garcia,
Records Retention Coordinator

INDIAN TRAIL
IMPROVEMENT DISTRICT

13476 61st Street North|West Palm Beach, FL 33412
G: 26.766819|-80.254761
T: 561.793.0874 | C: 561.815.0029 | F: 561.793.371

From: Customer Relations <CustomerRelations@indiantrail.com>
Sent: Thursday, December 5, 2024 8:55 AM
To: Yanet Cumapa <ycumapa@telcoprom.com>; info <info@indiantrail.com>
Cc: Lenin Cumapa <lcumapa@telcoprom.com>
Subject: RE: RECORDS REQUEST CANAL (M-1) ITID - PROJECT 2411ACJX

Good Morning,

Hope this email finds you well. We have forwarded your e-mail to the appropriate person. Please see link below for information regarding a special permit that would need to be filled out and brought to the board of supervisors for approval.

Special Permits | Indian Trail Improvement District, FL

Thank you,

Customer Relations

13476 61st Street North | West Palm Beach, FL 33412
G: 26.766819 | -80.254761
T: 561.793.0874

PLEASE NOTE: Florida has a very broad public records law. Most written communications to or from Indian Trail Improvement District officials and/or employees regarding public business are public records available to the public and media upon request. Your e-mail communications may be subject to public disclosure. Under Florida law, e-mail addresses are public records. If you do not want your e-mail address released in response to a public records request, do not send electronic mail to this entity. Instead, contact this office by phone or in writing.

From: Yanet Cumapa <ycumapa@telcoprom.com>
Sent: Thursday, December 5, 2024 8:48 AM
To: info <info@indiantrail.com>

Cc: Lenin Cumapa <lcumapa@telcoprom.com>
Subject: RECORDS REQUEST CANAL (M-1) ITID - PROJECT 2411ACJX

Some people who received this message don't often get email from ycumapa@telcoprom.com. Learn why this is important

Good morning,

There is a channel I would like information on to see if it is possible to install subway fiber.

- Could you please provide us with the channel design section and as-built records.
- Could you please provide any utility records available in the area (water, sewer, gas, etc..) so we can include them in our proposed design?

Channel of interest:
M-1 (ITID) channel along **OKEECHOBEE BLVD**, nearest intersection is **CIVIC CENTER WAY** and **CRESTWOOD BLVD N**. (Right-of-Way channel and cross section).

Please see the attached images for reference and the proposed construction route.

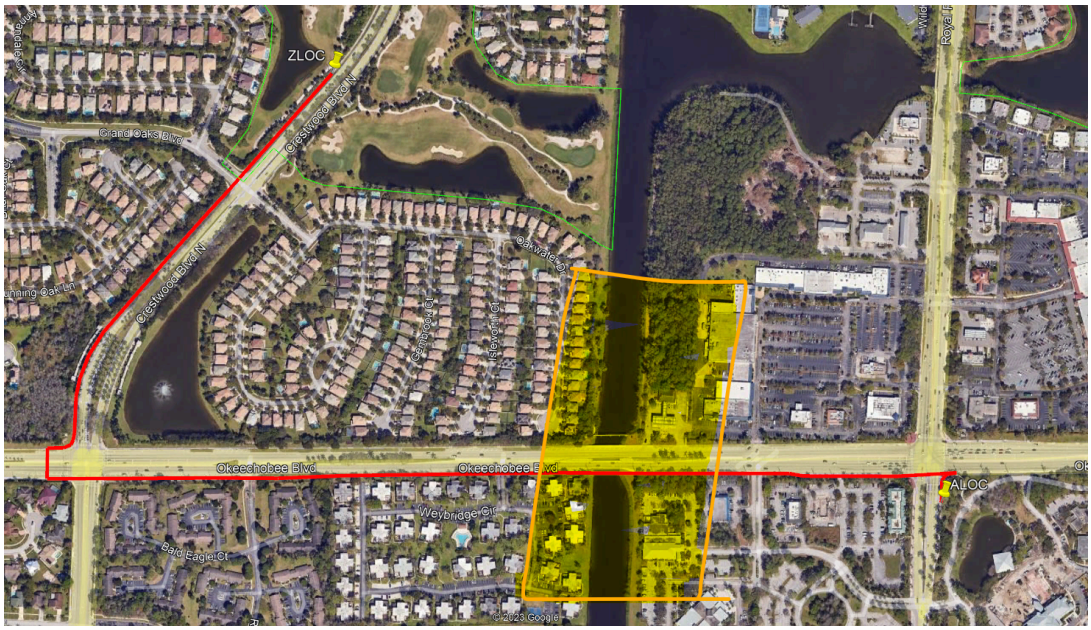

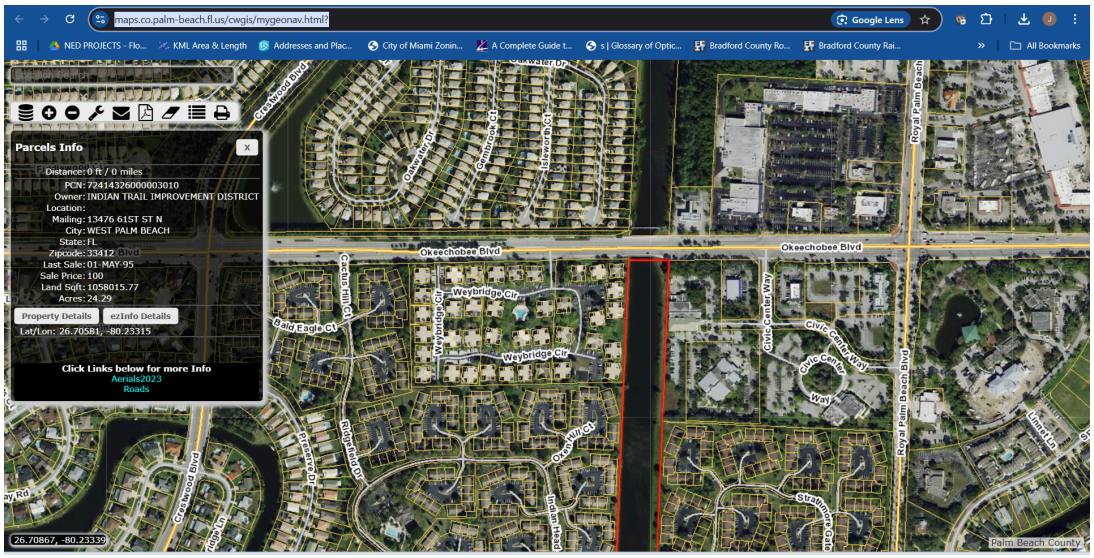

Thank you.

Outlook

Records requests

From Betty Argue <bargue@indiantrail.com>
Date Thu 12/5/2024 5:59 PM
To Heidi Garcia <hgarcia@indiantrail.com>

Please provide me with all records requests the District has received regarding the Acreage Athletic League (AAL) and any correspondence with anyone, including the original requestor, regarding those records requests since April 1, 2024.

Thank you,

Betty Argue, CDM CDO
Secretary, Board of Supervisors
Indian Trail Improvement District
13476 61st Street
West Palm Beach, FL 33470
Cell: 561-345-0110
Office: 561-793-0874
www.indiantrail.com

Florida Public Records Act Disclaimer

The Indian Trail Improvement District is governed by the Public Records Act as set forth in Chapter 119, Florida Statutes. Emails and email addresses are subject to the Public Records Act and are public records subject to disclosure. All emails, including attachments and any corresponding email addresses, sent or received are retained by the Indian Trail Improvement District as public records.

If you do not want your email or email address released in response to a public records request, do not send electronic mail to me. Instead please contact me at 561-345-0110 or the District Administration Office by telephone at 561-793-0874.

Outlook

12.09.24 Record Request

From Heidi Garcia <hgarcia@indiantrail.com>
Date Tue 12/10/2024 4:19 PM
To Betty Argue <bargue@indiantrail.com>
Cc Scarlet Cantley <SCantley@indiantrail.com>

Good Afternoon, Betty.

I hope this e-mail finds you well. Please see link below for your records request. Please let me know if you have any questions or concerns. I hope you have a wonderful day.

2024.12.09 ARGUE RECORD REQUEST

Kind Regards,
Heidi Garcia,
Records Retention Coordinator

13476 61st Street North|West Palm Beach, FL 33412
G: 26.766819|-80.254761
T: 561.793.0874 | C: 561.815.0029 | F: 561.793.371

Outlook

Fw: Record request meeting minutes from May 1, 2023 - November 15, 2024

From Patricia Farrell <pfarrell@indiantrail.com>
Date Thu 12/5/2024 3:35 PM
To info <info@indiantrail.com>
Cc Mary Viator - Caldwell Edwards et al LLP (viator@caldwellpacetti.com) <viator@caldwellpacetti.com>

Hello,

Per the service provider agreement, I am requesting all meeting minutes for Acreage Athletic League from May 1, 2023 - December 3, 2024, be provided to me in a reasonable time that will allow me to review the requested minutes prior to the December 18, 2024, Indian Trail Improvement District monthly meeting.

Thank you for your help in this matter.

Kindly,
Patty Farrell

From: Patricia Farrell
Sent: Monday, November 18, 2024 11:01 AM
To: Acreageathleticleague@gmail.com <Acreageathleticleague@gmail.com>; acreageathleticleaguetreasurer@gmail.com <acreageathleticleaguetreasurer@gmail.com>; smoochd75@comcast.net <smoochd75@comcast.net>; kellyandedflorida@comcast.net <kellyandedflorida@comcast.net>; bclaude1985@yahoo.com <bclaude1985@yahoo.com>
Subject: Record request meeting minutes from May 1, 2023 - November 15, 2024

Good morning.

I am making a formal record request for all meeting minutes from May 1, 2023 - November 15, 2024. Please email the meeting minutes no later than December 3, 2024.

Kindly,
Patty Farrell

Heidi Garcia

From: Heidi Garcia
Sent: Thursday, December 19, 2024 11:00 AM
To: Patricia Farrell
Cc: Scarlet Cantley
Subject: Fw: Record Request
Attachments: 2023 minutes.pdf; 2024 minutes.pdf

Good Morning Patty,

I hope this email finds you well. Please see attached the requested documents you requested from the AAL. I do apologize I am sending them a day late.

Kind Regards,
Heidi Garcia,
Records Retention Coordinator

13476 61st Street North|West Palm Beach, FL 33412
G: 26.766819|-80.254761
T: 561.793.0874 | C: 561.815.0029 | F: 561.793.371

From: Acreage Athletic League <acreageathleticleague@gmail.com>
Sent: Tuesday, December 17, 2024 2:11 PM
To: Heidi Garcia <hgarcia@indiantrail.com>
Cc: acreageathleticleaguetreasurer@gmail.com <acreageathleticleaguetreasurer@gmail.com>; smoochd75@comcast.net <smoochd75@comcast.net>; kellyandedflorida@comcast.net <kellyandedflorida@comcast.net>; bclaude1985@yahoo.com <bclaude1985@yahoo.com>; nicaflaca@gmail.com <nicaflaca@gmail.com>; Scarlet Cantley <SCantley@indiantrail.com>; Mary M. Viator Esq. (viator@caldwellpacetti.com) <viator@caldwellpacetti.com>; Michelle Garvey <mgarvey1977@yahoo.com>; Tim Opfer <topfer33412@gmail.com>; Animalcrackers3647@gmail.com <Animalcrackers3647@gmail.com>; Andi Dooley <aldooley88@aol.com>
Subject: Re: Record Request

Good afternoon,

Please see attached.

AAL EXBOD

On Dec 5, 2024, at 4:18 PM, Heidi Garcia <hgarcia@indiantrail.com> wrote:

Good Evening to whom this may concern,

I hope this email finds you well. We have received a record request for all meeting minutes for Acreage Athletic League from May 1, 2023 - December 3, 2024. May you please send at your earliest convienience. Thank you in advance for your assistance in this matter.

Kind Regards,
Heidi Garcia,
Records Retention Coordinator

13476 61st Street North|West Palm Beach, FL 33412
G: 26.766819|-80.254761
T: 561.793.0874 | C: 561.815.0029 | F: 561.793.371

Request Form

Pursuant to Chapter 119, Florida Statutes, **no fields are required**; however, **if you choose to make a public records request using this form,** please provide at least one method of contact, with a subject and detailed request.

Please note: Records can be obtained by phone, completion of the form below, or emailing recreq@indiantrail.com

Contact Details

Full Name
Lisa Simpson

Organization
SKIPPED

Full Address
9176 190th Street North
Loxahatchee FL 33470

Email
strivetoread@gmail.com

Phone
(561) 723-5547

Request Details

In order to help us provide you the best response to your request, please carefully consider providing specific information. Please know that broad requests can take longer to fulfill and may become costly for the requester. Including specific keywords, timeframes, document types (emails, texts), and narrowing a request to certain individuals or divisions can greatly reduce cost.

Summary of Records Requested
Any records whether written, email or board discussion on use of Indian Trail roadways & the School Board Property & Corbett west of 190th Avenue & Hamlin Blvd by Fanjul Corp., or its subsidiaries: Domino Sugar, Florida Crystals, C&H Sugar, Redpath Sugar, former Tate & Lyle sugar companies, and American Sugar Refining. Fanjul Corp. Please include any financial records or transactions.

Initial Date (Timeframe) of Requested Records
12/01/2023

Ending Date (Timeframe) of Requested Records
12/16/2024

Outlook

Record Request Response.

From Heidi Garcia <hgarcia@indiantrail.com>
Date Thu 12/19/2024 11:18 AM
To strivetoread@gmail.com <strivetoread@gmail.com>
Bcc Scarlet Cantley <SCantley@indiantrail.com>

Good Morning, Ms. Simpon,

I hope this email finds you well. I received your email requesting record request for any records whether written, email or board discussion on use of Indian Trail Roadways and the School Board Property and Corbett west of 190th Avenue and Hamlin Blvd by Fanjul Corp., or its subsidiaries: Domino Sugar, Florida Crystals, C&H Sugar, Redpath Sugar, former Tate & Lyle sugar companies, and American Sugar Refining. Fanjul Corp. Please include any financial records or transactions.

We did a search and found no records between 120/01/2023 - 12/16/2024. If you have any questions or concerns, you can contact me at 561-793-0874

Kind Regards,
Heidi Garcia,
Records Retention Coordinator

13476 61st Street North|West Palm Beach, FL 33412
G: 26.766819|-80.254761
T: 561.793.0874 | C: 561.815.0029 | F: 561.793.371

Heidi Garcia

From: doug richard <rdr.2204@aol.com>
Sent: Monday, December 23, 2024 10:17 AM
To: Heidi Garcia
Cc: doug richard
Subject: Forwarding of previous record request

> You don't often get email from rdr.2204@aol.com. Learn why this is important

This communication concerns a handwritten public records request submitted by Mr. Will Phillips on October 28, 2024. Documentation of this submission is reflected on page 373 of the November 13, 2024, agenda packet.

I respectfully request confirmation as to whether this request has been responded to. If a response has been provided, I hereby request that a copy of the response be forwarded to this email address.

If the request has not yet been addressed, please provide the following:

1. An explanation as to why the request remains unanswered; and
2. The anticipated timeframe for a response, with a request that the response be forwarded to me upon completion.

Thank you for your attention to this matter. I look forward to your prompt reply.

Heidi Garcia

From: Heidi Garcia
Sent: Monday, December 23, 2024 12:19 PM
To: doug richard
Cc: Scarlet Cantley
Subject: RE: Forwarding of previous record request

Good Morning Mr., Richard,

Hope this email finds you well. Mr. Phillips has added additional requests to the October 28th request and currently working with varies departments to answer all the requests. We have spoken to Mr. Phillips on the fee for his record request and once received will be processed. Please see link below as we provided to Mr. Phillips thus far as we work on the request in his entirety. These are also located on the Indian Trail website.

Budgets & Financial Reports | Indian Trail Improvement District, FL

Human Resources | Indian Trail Improvement District, FL

Permits | Indian Trail Improvement District, FL

Custom Documents, Images & Calendar | Indian Trail Improvement District, FL

Kind Regards,
Heidi Garcia,
Records Retention Coordinator

13476 61st Street North|West Palm Beach, FL 33412
G: 26.766819|-80.254761
T: 561.793.0874 | C: 561.815.0029 | F: 561.793.371

Florida Public Records Act Disclaimer

The Indian Trail Improvement District is governed by the Public Records Act as set forth in Chapter 119, Florida Statutes. Emails and email addresses are subject to the Public Records Act and are public records subject to disclosure. All emails,

including attachments and any corresponding email addresses, sent or received are retained by the Indian Trail Improvement District as public records.

From: doug richard <rdr.2204@aol.com>
Sent: Monday, December 23, 2024 10:17 AM
To: Heidi Garcia <hgarcia@indiantrail.com>
Cc: doug richard <rdr.2204@aol.com>
Subject: Forwarding of previous record request

> You don't often get email from rdr.2204@aol.com. Learn why this is important

This communication concerns a handwritten public records request submitted by Mr. Will Phillips on October 28, 2024. Documentation of this submission is reflected on page 373 of the November 13, 2024, agenda packet.

I respectfully request confirmation as to whether this request has been responded to. If a response has been provided, I hereby request that a copy of the response be forwarded to this email address.

If the request has not yet been addressed, please provide the following:

1. An explanation as to why the request remains unanswered; and
2. The anticipated timeframe for a response, with a request that the response be forwarded to me upon completion.

Thank you for your attention to this matter. I look forward to your prompt reply.

Request Form

Pursuant to Chapter 119, Florida Statutes, **no fields are required**; however, **if you choose to make a public records request using this form,** please provide at least one method of contact, with a subject and detailed request.

Please note: Records can be obtained by phone, completion of the form below, or emailing recreq@indiantrail.com

Contact Details

Full Name
Tim Ashurst

Organization
Personal

Full Address
7165 Avocado Boulevard
West Palm Beach Florida 33412

Email
ashurstair@gmail.com

Phone
(561) 358-2260

Request Details

In order to help us provide you the best response to your request, please carefully consider providing specific information. Please know that broad requests can take longer to fulfill and may become costly for the requester. Including specific keywords, timeframes, document types (emails, texts), and narrowing a request to certain individuals or divisions can greatly reduce cost.

Summary of Records Requested
All text and emails messages between Betty argue and the following Wendy Tirado Wendy Rojas Geoff grafton Danny Duncan Ed Quinn Alex Tirado Jose Tirado For the last 6 months

Initial Date (Timeframe) of Requested Records
06/01/2024

Ending Date (Timeframe) of Requested Records
12/20/2024

Heidi Garcia

From: Heidi Garcia
Sent: Monday, January 6, 2025 11:57 AM
To: Tim Ashurst
Cc: Scarlet Cantley
Subject: RE: 12/20/24 Record Request

Good Morning Mr. Ashurst,

Hope this email finds you well. We did a search as requested for all Text messages and emails between Betty Argue and the following Wendy Tirado, Wendy Rojas, Geoff Grafton, Danny Duncan, Ed Quinn, Alex Tirado, Jose Tirado for the last 6 months. Currently no records to produce. Please let me know if you have any questions or concerns.

Kind Regards,
Heidi Garcia,
Records Retention Coordinator

13476 61st Street North|West Palm Beach, FL 33412
G: 26.766819|-80.254761
T: 561.793.0874 | C: 561.815.0029 | F: 561.793.371

Florida Public Records Act Disclaimer

The Indian Trail Improvement District is governed by the Public Records Act as set forth in Chapter 119, Florida Statutes. Emails and email addresses are subject to the Public Records Act and are public records subject to disclosure. All emails, including attachments and any corresponding email addresses, sent or received are retained by the Indian Trail Improvement District as public records.

From: Tim Ashurst <ashurstair@gmail.com>
Sent: Friday, January 3, 2025 2:34 PM
To: Heidi Garcia <hgarcia@indiantrail.com>
Subject: Re: 12/20/24 Record Request

I'm just checking in I have never heard back

On Mon, Dec 23, 2024 at 9:47 AM Heidi Garcia <hgarcia@indiantrail.com> wrote:

Good Morning Mr. Ashurst

I hope this email finds you well and you had a wonderful weekend. I received your email request and will reply in a timely manner.

All requests are subject to fees after the first 15minutes. After the first 15 minutes there is a $20 per hour fee, and you will be notified by email with an estimated amount of time needed to complete your request. All fees must be paid by check or cash, no credit cards are excepted at this time. Fees are subject to change. If you have any questions or concerns. I look forward to hearing from you. I hope you have a blessed day

Kind Regards,

Heidi Garcia,

Records Retention Coordinator

13476 61st Street North|West Palm Beach, FL 33412

G: 26.766819|-80.254761

T: 561.793.0874 | C: 561.815.0029 | F: 561.793.371

Florida Public Records Act Disclaimer

The Indian Trail Improvement District is governed by the Public Records Act as set forth in Chapter 119, Florida Statutes. Emails and email addresses are subject to the Public Records Act and are public records subject to disclosure. All emails, including attachments and any corresponding email addresses, sent or received are retained by the Indian Trail Improvement District as public records.

AGENDA ITEM NO. 14.7

INDIAN TRAIL
IMPROVEMENT DISTRICT
EST. 1957

Executive Summary

REGULAR MEETING BOARD OF SUPERVISORS

DATE:	January 15, 2025
SUBMITTED BY:	Heide Garcia
DEPARTMENT:	Administration
ITEM TYPE:	Reports
AGENDA SECTION:	**REPORTS (File and Receive)**
SUBJECT:	Resident Correspondence
BACKGROUND:	Sometimes the District receives phone calls or emails thanking Staff for a job well done.
FISCAL IMPACT:	N/A
RECOMMENDATION:	There was () resident correspondence for the Month of November

---

ATTACHMENTS:

AGENDA ITEM NO. 14.8

INDIAN TRAIL
IMPROVEMENT DISTRICT
EST. 1957

Executive Summary

REGULAR MEETING BOARD OF SUPERVISORS

DATE:	January 15, 2025
SUBMITTED BY:	Heide Garcia
DEPARTMENT:	Administration
ITEM TYPE:	Reports
AGENDA SECTION:	**REPORTS (File and Receive)**
SUBJECT:	Meeting Notice
BACKGROUND:	Attached is the Notice published in the Palm Beach Post listing all Regular Board Meeting dates for FY-24.
FISCAL IMPACT:	None.
RECOMMENDATION:	Receive and file.

ATTACHMENTS:
2024-2025 annual meeting noti.pdf

NOTICE OF ANNUAL REGULAR MEETING SCHEDULE
OF INDIAN TRAIL IMPROVEMENT DISTRICT

NOTICE IS HEREBY GIVEN the following is a list of Regular Meetings of the Board of Supervisors of Indian Trail Improvement District, that may be held between October 1, 2024 and September 30, 2025. All such meetings will begin at 6:00 p.m. and be held in the District Office located at: 13476 61st Street North, West Palm Beach, Florida 33412.

Regular Board of Supervisors meetings will be held on the following dates:

Wednesday	October 16, 2024	6:00 P.M.
Wednesday	November 13, 2024	6:00P.M.
Wednesday	December 18, 2024	6:00 P.M.
Wednesday	January 15, 2025	6:00 P.M.
Wednesday	February 19, 2025	6:00 P.M.
Wednesday	March 19, 2025	6:00 P.M.
Wednesday	April 16, 2025	6:00 P.M.
Wednesday	May 21, 2025	6:00 P.M.
Wednesday	June 11, 2025	6:00 P.M.
Wednesday	July 16, 2025	6:00 P.M.
Wednesday	August 20, 2025	6:00 P.M.
Wednesday	September 17, 2025	6:00 P.M.

The purpose of these meetings is to transact any and all business to come before the Board of Supervisors.

Meetings may be continued to a date, time and location to be specified on the record at the meetings. Based on the needs of the District, scheduled Meetings may also be cancelled without advertised notice.

All Board Meetings shall be conducted in person and using ZOOM, a Communications Media Technology (CMT). ZOOM is a free online meeting tool that can be accessed from any computer, tablet, or smart phone. To attend Meetings using ZOOM, please go to the District Website www.indiantrail.com and click on the [Join Live Meeting] button and follow instructions. If you have any questions about ZOOM or the conduct of Meetings by CMT, please contact the District during regular operating hours at 561-793-0874. The public is asked to check the District website for up-to-date information and instructions.

If a person decides to appeal the decision of the Board of Supervisors with respect to any matter considered at the Public Board Meetings herein referred, he or she may need to ensure that a verbatim record of the proceeding is made, which record includes the testimony and evidence upon which the appeal is based. Any evidence, testimony, and argument which is offered utilizing CMT shall be afforded equal consideration as if it were offered in person, and shall be subject to the same objections.

In accordance with the Americans with Disabilities Act, persons needing a special accommodation or an interpreter to participate in these proceedings should contact the District by calling (561) 793-0874 at least 48 hours prior to the dates of the meetings. Every effort is used to provide closed captioning.

DATED this 5th day of September, 2024.

INDIAN TRAIL IMPROVEMENT DISTRICT

PUBLISH: The Palm Beach Post
September 8, 2024