AGENDA
CITY COUNCIL REGULAR MEETING
CITY COUNCIL CHAMBERS
5803 THUNDERBIRD
LAGO VISTA, TX
MAY 21, 2026 AT 3:00 PM

REGULAR SESSION WILL RECONVENE AT 4:00PM

AMENDED AGENDA

JOIN MEETING VIA VIDEO CONFERENCE

Please join my meeting from your computer, tablet or smartphone.
https://meet.goto.com/242387805
You can also dial in using your phone.
Access Code: 242-387-805
United States: +1 (646) 749-3122

I. CALL TO ORDER, CALL OF ROLL

Shane Saum, Mayor
Amanda Chavarria, Council Member
Jess Hall, Council Member
Adam Benefield, Council Member
Norma Owen, Mayor Pro Tem
Karen Van Ness, Council Member
Paul Prince, Council Member

II. EXECUTIVE SESSION

Convene into a closed Executive Session pursuant to;

1. Consultation with City Attorney pursuant to Texas Government Code § 551.071 regarding legal issues related to one or more items listed on this agenda, where confidential attorney-client advice is necessary.

2. Deliberation regarding the purchase, exchange, lease, or value of real property pursuant to Texas Government Code § 551.072, and consultation with the City Attorney regarding legal issues related to the same pursuant to Texas Government Code § 551.071.Consult with City Attorney concerning the purchase of property Pursuant to Texas Government Code Section 551.072.

3. Consultation with the City Attorney pursuant to Texas Government Code Section 551.071

regarding the Firefly Cove Planned Development District Concept Plan and Detailed Plan Amendment request.

4. Pursuant to Texas Government Code Section 551.071, Consultation with legal counsel, to seek and receive legal advice from legal counsel regarding any and all documents, agreements, obligations, rights, duties, claims, and legal issues involving or related to Hines Lake Travis Land II Limited Partnership, Tessera HOA, and Lakeside at Tessera on Lake Travis.

5. Consultation with City Attorney pursuant to Texas Government Code Sec. 551.071 regarding complaint asserted against City Manager, C. West, to receive legal advice, and obtain direction and possible authorization of investigation.

6. Consultation with City Attorney pursuant to Texas Government Code Sec. 551.071 regarding complaint asserted against City Councilman, A. Benefield, to receive legal advice, and direction and possible authorization of investigation.

III. ACTION ON EXECUTIVE SESSION ITEMS (action and/or vote may be taken on the following agenda items):

Reconvene from Executive Session into open session to act as deemed appropriate in City Council's discretion regarding:

1. Consultation with City Attorney pursuant to Texas Government Code § 551.071 regarding legal issues related to one or more items listed on this agenda, where confidential attorney-client advice is necessary.

2. Deliberation regarding the purchase, exchange, lease, or value of real property pursuant to Texas Government Code § 551.072, and consultation with the City Attorney regarding legal issues related to the same pursuant to Texas Government Code § 551.071.Consult with City Attorney concerning the purchase of property Pursuant to Texas Government Code Section 551.072.

3. Consider, discuss, and take possible action regarding the Firefly Cove Planned Development District Concept Plan and Detailed Plan Amendment request.

4. Pursuant to Texas Government Code Section 551.071, Consultation with legal counsel, to seek and receive legal advice from legal counsel regarding any and all documents, agreements, obligations, rights, duties, claims, and legal issues involving or related to Hines Lake Travis Land II Limited Partnership, Tessera HOA, and Lakeside at Tessera on Lake Travis.

5. Consultation with City Attorney pursuant to Texas Government Code Sec. 551.071 regarding complaint asserted against City Manager, C. West, to receive legal advice, and obtain direction and possible authorization of investigation.

6. Consultation with City Attorney pursuant to Texas Government Code Sec. 551.071 regarding complaint asserted against City Councilman, A. Benefield, to receive legal advice, and direction and possible authorization of investigation.

IV. INVOCATION

V. PLEDGE OF ALLEGIANCE TO THE U.S. FLAG AND PLEDGE TO TEXAS FLAG

Honor the Texas flag; I pledge allegiance to thee, Texas, one state under God, one and indivisible.

VI. PRESENTATIONS & PROCLAMATIONS

1. Proclamation Honoring the Lago Vista High School Graduating Seniors.

VII. CITIZEN COMMENTS

In accordance with the Open Meetings Act, Council is prohibited from acting or discussing (other than factual responses to specific questions) any items not on the agenda.

To participate in the citizen comments portion of the meeting, you must submit a completed form. If you are attending the meeting in the City Council Chambers you must complete the form available at that location and provide it to the Mayor prior to the start of the meeting. If you will be participating using the online videoconferencing tool, you must complete the form and submit it by email in accordance with the instructions included within the form. It is found on the City's website at the link below. The Council will reconvene from executive session at or around 4:00 p.m.

Citizen Participation Registration Form

VIII. CONSENT AGENDA

All matters listed under Consent Agenda, are to be considered routine by the City Council and will be enacted by one motion. There will not be separate discussion on these items. If discussion is desired, that item will be removed from the consent agenda and will be considered separately.

1. Ratify Ordinance No. 26-05-07-04, adopting the amended Rules of Procedure for the City Council, boards, and commissions.

2. Ratify Ordinance No. 26-05-07-03, rezoning approximately 7.055 acres located at 19708 Boggy Ford Road, legally described as ABS 189, Survey 98, Campbell M. F., and also known as Lot 32, Ranch Cielo, from TR-1 to a Planned Development District pursuant to Chapter 14, Section 10 of the City of Lago Vista Code of Ordinances. Case No. 25-2905-PDD-REZ.

3. Approve the minutes of the May 6, 2026, City Council called meeting.

4. Approve the minutes of the May 7, 2026, City Council Meeting .

IX. ACTION ITEMS

1. Consider, discuss, and take action on Ordinance No. 26-05-21-01 for the Unified Fee Schedule with Updates to the Development Services Department Fees.

2. Consider, discuss, and take action regarding dormant or inactive Planned Development Districts, associated LUE or utility-capacity commitments, project vesting, and potential amendments to the City's PDD, project expiration, and dormancy procedures.

3. Consider, discuss, and take action regarding the award of RFP No. 26-05 for Tree Clearing, Mulching, and Right-of-Way Maintenance Services to South Texas Tree Service and possible additional contractors, and authorize the City Manager to negotiate and execute

agreement(s).

X. WORK SESSION

1. Update regarding HB 2844 regarding food trucks.

2. Budget Work session.

XI. ITEMS OF COMMUNITY INTEREST

XII. STAFF AND COUNCIL LIAISON REPORTS

A. Routine Reports from City Staff.

B. Routine Reports from City Council Board/Commission/Committee Liaisons.

XIII. ADJOURNMENT

IT IS HEREBY CERTIFIED that the above Notice was posted on the Bulletin Board in accordance with Government Code section 551.041 located at all times in City Hall in said City by 12:00 pm on the 15th day of May 2026.

_____

Robin Smith , City Secretary

THIS MEETING SHALL BE CONDUCTED PURSUANT TO THE TEXAS GOVERNMENT CODE SECTION 551.001 ET SEQ. AT ANY TIME DURING THE MEETING THE COUNCIL RESERVES THE RIGHT TO ADJOURN INTO EXECUTIVE SESSION ON ANY OF THE ABOVE POSTED AGENDA ITEMS IN ACCORDANCE WITH THE SECTIONS 551.071, 551.072, 551.073, 551.074, 551.075 OR 551.076.

THE CITY OF LAGO VISTA IS COMMITTED TO COMPLIANCE WITH THE AMERICANS WITH DISABILITIES ACT. REASONABLE MODIFICATIONS AND EQUAL ACCESS TO COMMUNICATIONS WILL BE PROVIDED UPON REQUEST.

AT THIS MEETING AT THE STATED LOCATION, A QUORUM OF THE CITY COUNCIL WILL BE PHYSICALLY PRESENT, AND THIS NOTICE SPECIFIES THE INTENT TO HAVE A QUORUM PRESENT THERE, AND THE MEMBER OF THE CITY COUNCIL PRESIDING OVER THE MEETING WILL BE PHYSICALLY PRESENT AT THAT LOCATION. ONE OR MORE MEMBERS OF THE CITY COUNCIL MAY PARTICIPATE IN THIS MEETING REMOTELY, AND IF SO, VIDEOCONFERENCE EQUIPMENT PROVIDING TWO-WAY AUDIO AND VIDEO DISPLAY AND COMMUNICATION WITH EACH MEMBER WHO IS PARTICIPATING BY VIDEOCONFERENCE CALL WILL BE MADE AVAILABLE.

2025-2026-Adopted-Budget-PDF

AGENDA ITEM NO. VIII.1

Item Cover Page

CITY COUNCIL AGENDA ITEM REPORT

DATE: May 21, 2026

SUBMITTED BY: Charles West, City Manager

SUBJECT: Ratify Ordinance No. 26-05-07-04, adopting the amended Rules of Procedure for the City Council, boards, and commissions.

RECOMMENDATION: Ratify Ordinance No. 26-05-07-04

ATTACHMENTS:
Ord No. 26-05-07-04 Rules of Procedure with floor amendments.pdf

ORDINANCE NO. 26-05-07-04

AN ORDINANCE OF THE CITY COUNCIL OF THE CITY OF LAGO VISTA, TEXAS, ADOPTING RULES OF PROCEDURE FOR THE CITY COUNCIL, BOARDS, AND COMMISSIONS; AMENDING AND RESTATING THE CITY'S RULES OF PROCEDURE; PROVIDING FINDINGS OF FACT; PROVIDING A REPEALER; PROVIDING A SAVINGS CLAUSE; PROVIDING SEVERABILITY; PROVIDING PUBLICATION; PROVIDING AN OPEN MEETINGS CLAUSE; AND PROVIDING AN EFFECTIVE DATE.

WHEREAS, the City of Lago Vista, Texas is a home-rule municipality operating under the laws of the State of Texas and the City Charter; and

WHEREAS Texas Local Government Code Section 51.001 authorizes the governing body of a municipality to adopt, publish, amend, or repeal an ordinance, rule, or police regulation for the good government, peace, or order of the municipality and as necessary or proper for carrying out a power granted by law; and

WHEREAS, Article III, Section 3.13 of the Charter of the City of Lago Vista, Texas provides for the establishment of procedures for conducting City Council meetings by ordinance; and

WHEREAS the City Council desires to adopt updated Rules of Procedure applicable to the City Council, boards, and commissions in order to provide a fair, efficient, transparent, orderly, and legally grounded framework for conducting public meetings; and

WHEREAS the Rules of Procedure attached to this Ordinance as Exhibit A are intended to operate in harmony with Chapter 551, Texas Government Code, the City Charter, and all other applicable law; and

WHEREAS, the City Council finds that adoption of this Ordinance and the attached Rules of Procedure is necessary and proper for the good government, peace, and order of the City.

NOW, THEREFORE, BE IT ORDAINED BY THE CITY COUNCIL OF THE CITY OF LAGO VISTA, TEXAS:

SECTION 1. FINDINGS OF FACT.

The foregoing recitals are hereby found to be true and correct legislative and factual findings of the City Council and are incorporated into the body of this Ordinance as if fully set forth herein.

SECTION 2. ADOPTION; AMENDMENT AND RESTATEMENT OF RULES OF PROCEDURE.

The City Council hereby adopts the Rules of Procedure attached to this Ordinance as Exhibit A and incorporated herein for all purposes. Chapter 1, General Provisions, Article 1.300, City Council, Division 3, Meetings, Section 1.331, City Council Meetings, of the Lago Vista Code of Ordinances is amended and restated to provide that the Rules of Procedure for the City Council, boards, and commissions shall be the Rules attached as Exhibit A. Any prior rules of procedure, policies, or procedural provisions previously adopted or incorporated by ordinance are superseded to the extent they conflict with Exhibit A.

SECTION 3. APPLICATION.

The Rules of Procedure adopted by this Ordinance apply to the City Council and to City boards and commissions to the extent stated in Exhibit A and to the extent consistent with state law, the City Charter, and any enabling ordinance or resolution applicable to a particular board or commission.

SECTION 4. REPEALER.

All ordinances, resolutions, rules, policies, or parts thereof in conflict with this Ordinance or Exhibit A are repealed only to the extent of the conflict. No repeal of any prior ordinance or provision shall affect any accrued right, pending matter, prior action, or prior proceeding unless expressly stated herein.

SECTION 5. SAVINGS CLAUSE.

The adoption of this Ordinance shall not affect, impair, or invalidate any action taken, vote cast, meeting held, appointment made, notice posted, or proceeding conducted before the effective date of this Ordinance. Any such action or proceeding shall remain valid to the extent it was valid under the rules and law in effect at the time.

SECTION 6. NO PENALTY CREATED.

This Ordinance establishes and adopts procedural rules for the conduct of City meetings. It does not create a criminal offense, civil penalty, fine, forfeiture, or other punitive sanction.

SECTION 7. SEVERABILITY.

If any section, subsection, sentence, clause, phrase, or word of this Ordinance or the Rules of Procedure adopted by this Ordinance is held to be unconstitutional, illegal, invalid, or unenforceable by a court of competent jurisdiction, the remaining portions shall remain in full force and effect. The City Council declares that it would have passed this Ordinance and each portion hereof irrespective of the fact that any one or more portions may be declared invalid.

SECTION 8. PUBLICATION.

The City Secretary is authorized and directed to publish the caption of this Ordinance or the Ordinance in the manner required by law and the City Charter, and to file this Ordinance and Exhibit A in the official records of the City.

SECTION 9. PROPER NOTICE AND OPEN MEETINGS.

The City Council finds and determines that the meeting at which this Ordinance was adopted was open to the public and that public notice of the date, hour, place, and subject of the meeting was given as required by Chapter 551, Texas Government Code, and any other applicable law. All deliberations and votes on this Ordinance occurred in open session except to the extent a closed session was authorized by law.

SECTION 10. EFFECTIVE DATE.

This Ordinance shall take effect after passage and approval, and publication if required by law and the City Charter.

PASSED AND APPROVED on this **7** day of **May**, 2026.

AND, IT IS SO ORDERED.

PASSED AND APPROVED this **7th** day of **May** 2026.

_____

Norma Owen

Mayor Pro Tem, City of Lago Vista, Texas

ATTEST:

_____

Robin Smith

City Secretary, City of Lago Vista, Texas

APPROVED AS TO FORM:

_____

Bradford Bullock

City Attorney, City of Lago Vista, Texas

Exhibit A

Rules of Procedure

City Council, Boards, and Commissions of the City of Lago Vista, Texas

These Rules are intended to provide the City Council, boards, and commissions with a clear, concise, and legally grounded framework for conducting meetings in a manner that is orderly, transparent, and accessible to the public.

Article 1. Authority, Purpose, and Scope

1.01 Authority. These Rules are adopted pursuant to Article III, Section 3.13 of the Charter of the City of Lago Vista, Texas, and in harmony with Chapter 551, Texas Government Code, and other applicable law.

1.02 Purpose. The purpose of these Rules is to provide a fair, efficient, and transparent process for conducting meetings of the City Council, boards, and commissions, preserving meaningful public participation, and reducing unnecessary procedural complexity.

1.03 Scope. These Rules apply to meetings of the City Council and to meetings of all City boards and commissions unless a specific state-law requirement or an enabling ordinance or resolution for a particular body provides otherwise. In these Rules, "covered body" means the City Council or a City board or commission, as applicable.

1.04 Controlling law. If these Rules conflict with federal law, state law, or the City Charter, the higher authority controls. These Rules shall be interpreted to favor compliance with open-government requirements and the orderly transaction of public business.

1.05 Annual review and amendment. The Council should review these Rules after each general City election. These Rules may be amended by ordinance at a properly posted meeting.

Article 2. Meetings, Notice, and Quorum

2.01 Regular meetings. Regular meetings shall be held at the times and dates established by Council resolution or by the ordinance, resolution, or posted schedule applicable to the covered body.

2.02 Special meetings. Special meetings may be called by the Mayor for Council meetings and by the chair or as otherwise authorized by the enabling ordinance, resolution, or other applicable law for a board or commission.

2.03 Emergency meetings. Emergency meetings or meetings called for urgent public necessity may be held and posted only as permitted by Chapter 551, Texas Government Code.

2.04 Work sessions. A covered body may conduct work sessions or workshops as open meetings or as part of a regular meeting agenda. No final action shall be taken unless the item is properly posted for action. Public comment rights on posted items are preserved.

2.05 Notice and agenda. The City Secretary or designee shall post notice of each meeting in the form, manner, and time required by law. The notice shall clearly identify the date, hour, place, and subjects to be considered. A covered body shall not deliberate or act on matters not properly posted except as authorized by law.

2.06 Open meetings. All meetings of a covered body shall be open to the public except when a closed meeting is expressly authorized by law.

2.07 Executive session. Before convening in executive session, a covered body shall first convene in open meeting, announce the applicable legal authority, and limit the closed discussion to the posted subject. Final action, decision, or vote shall occur only in an open meeting.

2.08 Accessibility. Meetings shall be held in locations accessible to the public and in a manner consistent with applicable accessibility laws.

2.09 Quorum. For the City Council, the quorum requirements of Charter Section 3.12 apply. For a board or commission, a quorum consists of a majority of the members of that body unless a different quorum is established by applicable law, ordinance, or resolution. Less than a quorum may adjourn a meeting, and the Council may canvass an election, as permitted by the Charter or state law.

Article 3. Presiding Officer and Order of Business

3.01 Presiding officer. The Mayor presides at Council meetings. In the Mayor's absence, the Mayor Pro Tem presides. At meetings of a board or commission, the chair presides; in the chair's absence, the vice-chair or another member designated by the body presides. The presiding officer shall preserve order, recognize speakers, apply these Rules, and facilitate fair and efficient discussion.

3.02 Standard order of business. Unless modified for a particular agenda, the usual order of business should be: call to order and announcement of quorum; invocation and pledges, when included; announcements or reports about items of community interest, when permitted by law; citizen communications; consent agenda; business and action items; future agenda requests and member reports; executive session, if any; action on executive-session items, if any; and adjournment. The presiding officer may adjust the order of items for efficiency unless prohibited by law or unless the covered body directs otherwise.

3.03 Standard agenda-item process. Unless the covered body directs a different sequence for a particular item, business items should proceed in this order: staff presentation, questions from members of the covered body to staff, public comment on the item, deliberation by the covered body, motion, and vote. Staff presentations should be concise and focused on the decision before the covered body.

3.04 Consent agenda. Routine items may be placed on the consent agenda and acted on by one motion. Any member of the covered body may remove an item from the consent agenda for separate consideration without debate.

3.05 Future agenda requests and member reports. During the designated agenda item, a member of the covered body may request that a matter be placed on a future agenda or may provide a brief report about an item of community interest as permitted by law. No deliberation or action shall occur on the request or report unless the matter is separately posted.

3.06 Council member placement of agenda items. Any two Council Members may request placement of an item on a future City Council agenda, and such item shall not be deleted except as permitted by the City Charter. The requesting Council Members shall identify whether the item is requested for discussion, staff direction, or formal action, and the item shall be placed under the appropriate agenda category based on the nature of the request.

Article 4. Public Participation

4.01 Citizen communications on non-agenda items. A citizen communications agenda item should ordinarily be included on open meeting agendas of each covered body to receive comments on matters within the City's or the body's jurisdiction that are not otherwise posted for action. The covered body may briefly respond as permitted by law, including by requesting clarification, referring the matter to staff, or requesting a future agenda item. The covered body shall not deliberate or take action on a non-posted matter except as authorized by law.

4.02 Comment on agenda items. Any member of the public who wishes to address a covered body on a posted agenda item at an open meeting shall be allowed to do so before or during the covered body's consideration of the item and before the covered body votes on the item.

4.03 Public hearings. Any person present at a public hearing who requests in writing to be heard on the subject of the hearing shall be allowed to address the covered body before the hearing is closed.

4.04 Sign-in and time limits. The City may use speaker cards or other written sign-in procedures. Unless adjusted by the presiding officer for the orderly conduct of the meeting, each speaker shall be allowed three minutes. The presiding officer may apply reasonable, content-neutral time, place, and manner rules which shall apply equally to all speakers.

4.05 Responses to speakers. Members of the covered body may ask clarifying questions of a speaker or of staff. Substantive debate among members shall occur only on posted agenda items.

4.06 Public conduct. Speakers shall address the covered body as a body and shall observe reasonable rules of decorum. Disruptive conduct that materially interferes with the meeting is not permitted. The presiding officer may issue warnings and take reasonable steps to maintain order.

Article 5. Member Discussion, Motions, and Voting

5.01 Recognition and relevance. A member of a covered body shall speak after being recognized by the presiding officer. Discussion should remain germane to the posted item or motion under consideration. To promote orderly discussion, each member should have an opportunity to speak once before any member speaks a second time on the same motion or item.

5.02 Motions. Action by a covered body shall be taken by motion and vote. A motion should receive a second before debate and vote. The presiding officer may restate a motion for clarity before the vote.

5.03 Amendments and parliamentary guidance. A motion may be amended by motion and vote. On questions of procedure not addressed in these Rules, Rosenberg's Rules of Order shall serve as the primary parliamentary guide, provided that federal law, state law, the City Charter, these Rules, and any enabling ordinance or resolution applicable to the covered body shall control over Rosenberg's Rules. The presiding officer shall decide procedural questions in the first instance, subject to appeal under Section 5.06.

5.04 Voting. Members present shall vote and have their votes recorded on every action requiring a vote unless abstention is required or permitted by the Charter, other applicable law, or the City's ethics rules. For the City Council, no action is adopted unless approved in open meeting with a quorum present, by a majority of the members present and voting, and with not fewer than three affirmative votes. For a board or commission, action is adopted by the vote required by applicable law or the body's enabling ordinance or resolution; if no different rule applies, action is adopted by a majority of the members present and voting with a quorum present.

5.05 Conflicts of interest and abstentions. A member of a covered body shall disclose and abstain when required by the Charter, state law, or the City's ethics rules. When a member abstains, the reason shall be reflected in the minutes to the extent required by law.

5.06 Appeal of the chair. A ruling by the presiding officer on a procedural issue may be appealed to the covered body. The covered body shall decide the appeal by vote, subject to applicable voting requirements.

Article 6. Minutes, Records, and Administration

6.01 Minutes and records. The City Secretary, recording secretary, or staff liaison designated for the covered body shall maintain minutes and other meeting records as required by the Charter, applicable ordinances or resolutions, and Chapter 551, Texas Government Code. The minutes shall record the substance required by law, the action taken, and the vote of each member on every action requiring a vote.

6.02 Executive-session records. Certified agendas and other records of executive sessions shall be created, preserved, and disclosed only as provided by law.

6.03 Use of technology. Audio, video, videoconference, or other meeting technology may be used by a covered body only as permitted by state law and in a manner that protects public access and the integrity of the meeting.

6.04 Interpretation. These Rules shall be interpreted to promote compliance with the Charter and state law, meaningful public participation, and efficient conduct of business by covered bodies.

6.05 Discipline. Any formal censure, discipline, or removal of a Council Member shall proceed only as authorized by the City Charter, the City's ethics ordinance, state law, and a properly posted agenda item. No Council Member shall be formally censured, disciplined, or removed without notice and an opportunity to respond as required by applicable law.

6.06 Severability. If any provision of these Rules is held invalid, the remaining provisions remain in effect.

AGENDA ITEM NO. VIII.2

Item Cover Page

CITY COUNCIL AGENDA ITEM REPORT

DATE: May 21, 2026

SUBMITTED BY: Jordan Strohmeyer, Development Services

SUBJECT: Ratify Ordinance No. 26-05-07-03, rezoning approximately 7.055 acres located at 19708 Boggy Ford Road, legally described as ABS 189, Survey 98, Campbell M. F., and also known as Lot 32, Ranch Cielo, from TR-1 to a Planned Development District pursuant to Chapter 14, Section 10 of the City of Lago Vista Code of Ordinances. Case No. 25-2905-PDD-REZ.

RECOMMENDATION: Ratify Ord. No. 26-05-07-03.

ATTACHMENTS:
26-05-07-03 Laverne Estates Final wt Exhibits.pdf

ORDINANCE NO. 26-05-07-03

AN ORDINANCE OF THE CITY COUNCIL OF THE CITY OF LAGO VISTA, TEXAS, AMENDING THE OFFICIAL ZONING MAP BY CHANGING THE ZONING DISTRICT FOR THE PROPERTY LOCATED AT 19708 BOGGY FORD, APPROXIMATELY 7.055 ACRES OF LAND OWNED BY LAVERNE ESTATES LP, FROM TR-I ("TEMPORARY RESTRICTED") TO A PDD ("PLANNED DEVELOPMENT DISTRICT") WITH DESIGN APPROVAL TO BE REFERRED TO AS THE "LAVERNE ESTATES PLANNED DEVELOPMENT DISTRICT;" AND PROVIDING FOR RELATED MATTERS.

WHEREAS, Laverne Estates, LP acting by and through Arun Dendukuri, the owner of approximately 7.055 acres of land in at 19708 Boggy Ford Road in Lago Vista, Texas and in Travis County, Texas as more particularly described on the attached Exhibit "A" (described hereinafter as the "Property"), have requested that the Property be zoned as a PDD to be known as the "Laverne Estates Planned Development District," and

WHEREAS, the Property currently resides within the corporate limits of the City of Lago Vista;

WHEREAS, the conceptual plan for the Property is set forth in this "Laverne Estates PDD" Zoning Ordinance (the "Ordinance") and in Exhibit "B" attached hereto (the "Land Use Plan"), which identifies and designates various land uses for the Property as further described below;

WHEREAS, after giving ten (10) days written notice to the owners of land in and within 200-feet of the area being rezoned, as well as having published notice to the public at least fifteen (15) days prior to the date of such hearings, the Planning and Zoning Commission and City Council each held separate public hearings on the proposed rezoning of the Property included in this Ordinance; and

WHEREAS, the Planning and Zoning Commission at its public hearing held on January 8, 2026 and the City Council at its public hearing held on February 19, 2026, have both reviewed the request and the circumstances of the Property, and find that a substantial change in the circumstances of the Property, sufficient to warrant a change in the zoning of the Property, has transpired; and

WHEREAS, the City, by and through its legislative discretion, has adopted a comprehensive plan for the City of Lago Vista, and having considered and reviewed such comprehensive plan, the City Council finds the rezoning approved herein is consistent with the comprehensive plan which shall not be interpreted as inconsistent with this rezoning; and WHEREAS, the City desires that development within its corporate limits occur in an orderly manner in order to protect the health, safety, and welfare of its present and future citizens, protect property values and provide for the growth of the City's tax base; and

WHEREAS, the City desires to control the development standards for the Property, protect third party property owners in the City, and to ensure the benefits of planned development and an enhanced tax base that are achieved through rezoning the Property; and

WHEREAS, pursuant to Chapter 211 of the Texas Local Government Code, the City has the authority to zone and rezone property; and

WHEREAS, the City Council finds that it is necessary and proper for the good government, peace or order of the City of Lago Vista to adopt this Ordinance.

Now, THEREFORE, BE IT ORDAINED BY THE CITY COUNCIL OF THE CITY OF LAGO VISTA, TEXAS, THAT:

Section 1. Findings. The foregoing recitals are hereby found to be true and correct and are hereby adopted by the City Council and made a part hereof for all purposes as findings of fact. The Planning and Zoning Commission and City Council find that this Ordinance satisfies the requirements of Section 6.105, Section 10 and Section 13 of the City of Lago Vista Zoning Ordinance, codified under Ordinance No. 98-04-27-03, as amended (the "Zoning Code").

Section 2. Enactment. The Zoning Code and other applicable ordinances are hereby modified and amended by rezoning the Property as set forth in Section 3.

Section 3. Rezoned Property. The Zoning Code is hereby amended by zoning the Property, being the 7.055 acre tract of land described on Exhibit "A" attached to this Ordinance, as a PDD zoning district. The Property is hereby zoned as the "Laverne Estates Planned Development District" with the uses of individual land areas as set forth in this Ordinance. The proposed development will adopt the C-2 zoning district as its base zoning which corresponds to the designation of the land in the current Future Land Use map as published in the 2030 Comprehensive Master Plan passed by the Lago Vista City Council in May of 2016 (see Exhibit “A” for the official legal description of the property and the survey with the property boundaries).

Section 4. Amendment of Applicable Zoning Ordinances. The zoning requirements established in this Ordinance shall apply to the Property. The comprehensive zoning requirements of the Zoning Code and all other applicable ordinances, as they may be amended by this Ordinance, shall apply to the Property. Should any conflict appear between the requirements of the zoning and development ordinances of the City of Lago Vista as compared with the requirements for the Property set forth in this Ordinance, the requirements set forth in this Ordinance shall control.A building permit is required to be submitted for this project no later than 48 months after this ordinance is approved, or the ordinance expires and the zoning reverts back to TR-1.

Section 5. Phasing within the PDD. The Property shall be developed in one phase in accordance with the Land Use Plan and as depicted in Exhibit "B", attached hereto and incorporated herein for all purposes. The development will consist of a Hotel (78 rooms in a building covering .42 acres), Restaurant housed in the hotel building, Spa also housed in the hotel building, Conference Center (separate building occupying .32 acres), and Casitas (6 individual buildings occupying .03 acres) with associated parking, stormwater treatment, stormwater detention, utilities, grading and access improvements. The subject property is 7.055 acres and is moderately wooded with significant topographic variation (approximately 76’ of elevation change across the site). The property contains numerous trees of native species (Live Oak, Cedar Elm), as well as non-native species such as Cedar trees (Ashe Juniper).

Section 6. Zoning Requirements. The following use and site development requirements established herein shall apply to the Property:

1. Zoning. The base zoning district will be C-2. The applicant proposes to change the base zoning from TR-1 (current) to PDD (Planned Development District). All C-2 standards shall apply except where modified herein. The planned development standards shall supersede any conflicting provisions of the City of Lago Vista Unified Development Code. The use and development of the Property shall comply with the zoning requirements and development standards of the City of Lago Vista, except as specifically described below (see additional detail in Exhibit B-6).

   A. Resort Hotel, Restaurant, and Spa Complex. This single structure or series of attached structures is to serve as a resort lodging facility, with support and ancillary amenities to accommodate short-term visitors to the area. A maximum of 78 guest rooms shall be allowed, each with a minimum area of 400 square feet. Anticipated amenities and support functions shall include, but not be limited to restaurants, hotel-related retail services, a full-service spa including a hair and nail salon, fitness facilities, and staff offices. The maximum enclosed area, exclusive of any covered parking facilities, shall be 73,116 square feet. This facility shall comply with the development standards of the C-2 zoning district except as otherwise described herein.

   B. Casitas. A maximum of SIX separate structures with a minimum of 800 square feet that will provide short-term lodging. Each structure will include two rental units, with each rental unit including between one and two bedrooms. These facilities shall comply with the development standards of the R-4 zoning district except as otherwise described herein. These units will be managed by the hotel and will not be a condo regime or Short Term Rental model.

   C. Conference Center. A single structure that is intended to provide conference and meeting space for use by hotel guests and local participants

2. Development Standards.

   A. Streets.

      i. All streets and driveways on the Property are private and shall be maintained by the property owner. There are no public streets on the Property.

      ii. The subject property is situated near the northwest corner of Boggy Ford Road, and Lohman Ford Road, which are public roadways. This project proposes connecting only to Boggy Ford Road which will be our primary frontage.

      iii. All fire lanes shall be a minimum of 24 feet wide and constructed in accordance with the City of Lago Vista design standards and specifications and requirements of the applicable Travis County Emergency Services District.

iv. Boggy Ford Road is the only access point for the site and will serve as the primary street access. Secondary access shallbe provided if access to Lohman Ford Rd. becomes available through adjacent property owner.

B. Sidewalks. A Public Access Easement will be provided along front of the property and sidewalks will be constructed at the cost of the owner during site development. Sidewalks are not required anywhere on the property except as otherwise required by the Americans with Disabilities Act. Sidewalks shall be provided internally throughout the Property at the discretion of the owner.

C. Parking. Required off-street parking shall comply with the Lago Vista Zoning Ordinance except as described below:

i. Parking may be located between buildings and Boggy Ford Road.

ii. Parking may be located between the building(s) and the roads where necessary due to design, grading, tree preservation, or site constraints.

iii. No parking shall be allowed along Boggy Ford Road.

iv. Parking ratios shall conform to the following

LAGO VISTA RESORT HOTEL USE/PARKING TABLE					
Use	Quantity	Unit	Use Parking Ratio	Parking Required	Parking Provided
Hotel/Motel	78	Rooms	1 PER ROOM	78	90
Event Space (Main)	6,000	sq. ft.	1 PER 500 SF	12	20
Event Space (Aux)	7,929	sq. ft.	1 PER 500 SF	16	17
Restaurant (Lobby Includes Bar)	4,000	sq. ft.	1 PER 250 SF	16	23
Casita	12	Rooms	1 PER ROOM	12	25
			Total Required	134	175

D. Setbacks and Buffers.

i Minimum setbacks shall follow C-2 standards

ii Grading, paving/parking, utilities, drainage facilities, stormwater facilities, and retaining walls shall be permitted within setback areas.

E. Signage. All signage shall be in accordance with the applicable requirements (including lighting) of the City of Lago Vista, except as described in the Signage Plan and standards included in Exhibit "C" attached hereto.

F. Maximum Building Heights.

i. Resort Hotel and Spa Complex: The maximum height of the structure shall be forty-two (42) feet above grade The building will have its base at 993 AMSL and extend up 42 feet to 1035 AMSL.

ii. All Other Structures: No other structure shall exceed two (2) stories in height from the level of the fire lane or emergency access drive at the front of or adjacent to the building. The maximum height of each

structure shall be thirty-two (32) feet above grade, measured from the lowest adjacent paving elevation of the front or nearest adjacent driveway. No height variance is needed or being requested for all the other structures.

G. Tree Preservation. Section 20, "Tree Preservation and Landscaping Requirements" in Part IV "Administration and Enforcement" of the Lago Vista "Zoning Ordinance" is acknowledged to dictate the requirements concerning the removal of protected trees from the subject property. Full compliance with the cited section will control the development of the property. Replacement trees on the Property shall be located in accordance with an approved landscape plan. Encroachment into up to 25% of the critical root zone of trees shall be permitted, provided: (1) a certified arborist report is submitted (where needed); (2) tree protection measures are implemented; (3) monitoring occurs before, during, and after construction. Preserved tree clusters may count towards mitigation requirements.

H. Impervious Cover. The subject property, contrary to previous submittals, does NOT lie in the Austin ETJ release area as defined by the Interlocal Agreement between the City of Austin and the City of Lago Vista (see Exhibit B-7). The development will adhere to current Lago Vista C-2's impervious cover standards.

I. Landscaping. Landscaping within the Laverne Estates Planned Development District shall comply with the modified standards herein which supersede conflicting provisions of the Unified Development Code.

a Credit for Existing Vegetation: Preserved wooded areas may count toward required landscape area, buffer area, and open space requirements; Preserved tree clusters may substitute for required parking lot trees and perimeter trees; Existing understory vegetation may count toward buffer requirements without supplemental planting unless deemed necessary for screening of mechanical or service areas.

b Parking Lot Interior Landscaping: Interior landscaping shall require no more than one (1) landscape island per ten (10) parking spaces; Existing trees located within parking areas may count toward required islands; Interior landscape islands may be reduced or relocated where necessary to preserve existing trees or accommodate grading constraints.

c Street and Perimeter Landscaping: Street frontage planting may consist of preserved natural vegetation.; Where preserved vegetation exists along property boundaries, additional buffer planting shall not be required; Landscape buffers may be reduced

where topography or existing wooded areas provide effective screening.

d Irrigation: Irrigation shall not be required for preserved natural areas; Drip irrigation or temporary establishment irrigation shall be permitted in lieu of permanent spray systems; Native and drought-tolerant plant species are encouraged but not required. All irrigation shall be installed utilizing purple non-potable system piping so, if and when Type 1 water is available, irrigation will be required to utilize this water rather than potable water.

e Planting Size Requirements: Replacement trees may be planted at a minimum two-inch (2") caliper; Shrubs may be planted at five-gallon size; Groundcover may substitute for shrubs where appropriate. Parking Light Screening Evergreen landscaping around the perimeter of the parking lot with foliage to down to the ground.

f Alternative Compliance: The Development Services Director may approve alternative landscape configurations that preserve existing natural features and reduce grading, provided the overall intent of buffering and visual screening is maintained.

J. Exterior Lighting. All exterior lighting shall comply with Lago Vista's Dark Skies ordinance in force at the time of permitting

K. Building Orientation and Street Visibility. Buildings shall provide an architectural façade toward adjacent public rights-of-way; however, buildings shall not be required to: Provide a primary pedestrian entrance directly from a public street, Provide retail storefront elements, or Meet any minimum glazing percentage. All loading and unloading areas will be out of view from Boggy Ford Rd.t.

L. Fenestration and Transparency. No minimum glazing percentage or window-to-wall ratio shall apply. Window placement and quantity shall be determined by: Interior functionality, Energy efficiency, Solar orientation, Cost efficiency. Blank wall areas are permitted and may be treated with: Material variation, Architectural banding, Reveals, Landscaping.

M. Building Articulation. Buildings should incorporate architectural variation sufficiently to avoid large uninterrupted monotone surfaces. Variation may be achieved through: Material changes, Color changes, Entry features, Canopies or awnings, Architectural reveals, Vertical or horizontal banding, No minimum depth, frequency, or height change shall be required.

N. Building Frontage and Height. No minimum building frontage requirement shall apply. Buildings may be located anywhere within the buildable area, subject only to the agreed setbacks. Buildings shall have a max height of 42'.

O. Grading and Retaining Walls. Retaining walls up to 20 feet in height shall be permitted administratively. Tiered retaining wall systems shall be permitted. Grading within setback areas shall be permitted. These items will be assessed after design and permit has been approved and minimal impact to neighbors can be proven if any of the above is situated in the setbacks.

P. Cross-Access. No cross-access design or planning shall be required for this site. Public sidewalk easements may serve concurrently as Common Access Easements. If development occurs north of this property, cross access may be allowed.

Q. Drainage and Stormwater. Detention and water quality facilities may be located within setbacks. Underground detention and water quality is permitted. Cut from areas in the development will be redeployed to the northernmost part of the property to raise it and guide stormwater to the detention pond located at the southern end of the property (see Exhibit B-4). Pool discharge will be directed to facilities to be built by the developer and not discharged into the City of Lago Vista Sewer System in accordance with all TCEQ and LCRA regulations.

R. Other Applicable Regulations. Design and construction shall comply with all applicable regulations of other agencies or jurisdictions, including but not limited to the American with Disabilities Act, the Texas Accessibility Standards, TCEQ and LCRA.

3. Traffic Mitigation. The Developer completed a Traffic Impact Analysis in accordance with city requirements (see "Exhibit E"), coordinated with the city engineer, and will fully mitigate its proportional impact on the roadway system. A Deceleration Lane is required as part of the mitigation efforts from the traffic impact analysis; this additional lane will be dedicated by way of plat with additional right of way in order to accommodate an additional lane on Boggy Ford in addition to the deceleration lane. Payments for the development's proportional impacts will be made to the city who will be responsible for coordinating payments from other developers and then making subsequent offsite improvements to the impacted roadway elements. Payments made by developer are subject to any credits against roadway impact fees as permitted by law.

4. Agreement. The appropriate departments of the City, the Planning & Zoning Commission and the City Council hereby find and agree that this Ordinance and the project contemplated herein complies with and satisfies the requirements of Section 6.105, Section 10.20, and Section 13.20 of the Zoning Ordinance as well as the Comprehensive Master Plan of the City of Lago Vista. The City Council finds that this Ordinance serves as both a concept plan and a detail plan approval and that no additional detail plans are required by the Zoning Ordinance and thus the requirements of Section 10.20(e) have been met.

5. Land Use Plan. The depiction of the "Laverne Estates Planned Development District" in Exhibit "B" is not intended to reflect the level of detail and finality associated with construction permit documents. Non-substantive changes which do not alter the basic relationship of the proposed development to adjacent property, which do not alter the uses permitted, increase the density, height, or impervious surface coverage of the site, which do not decrease the off-street parking ratio or reduce the required setbacks within the boundary of the site and which do not decrease any buffers shown on the approved detail plan shall be administratively authorized in writing by the Development Services Director. Conversely, substantive changes in the detail plan shall be considered in accordance with the requirements of Section 10 of the Zoning Ordinance.

Section 7. Repealer. The Zoning Ordinance and all other applicable portions of the Lago Vista Code of Ordinances are amended as required to incorporate the "Laverne Estates Planned Development District" as described herein. Any portion of the Zoning Ordinance, Comprehensive Master Pan or any applicable ordinance in conflict with this Ordinance is hereby repealed or amended to the extent of such conflict only.

Section 8. Severability. Should any section or part of this Ordinance be held unconstitutional, illegal, or invalid, or the application to any person or circumstance for any reasons thereof ineffective or inapplicable, such unconstitutionality, illegality, invalidity, or ineffectiveness of such section or part shall in no way affect, impair or invalidate the remaining portion or portions thereof; but as to such remaining portion or portions, the same shall be and remain in full force and effect and to this end the provisions of this Ordinance are declared to be severable.

Section 9. Effective Date. This Ordinance shall be in force and effect from and after its passage on the date shown below in accordance with the provisions of the Texas Local Government Code and the City's Charter.

Section 10. Change of Zoning Map. The City Manager is hereby authorized to and shall promptly note the zoning change on the official Zoning Map of the City of Lago Vista, Texas.

Section 11. Proper Notice and Meeting. It is hereby officially found and determined that the meeting at which this Ordinance is passed was open to the public as required and that public notice of the time, place, and purpose of said meeting was given as required by the Open Meetings Act, Chapter 551, Texas Local Government Code.

AND, IT IS SO ORDERED.

PASSED, APPROVED and ADOPTED this 7th day of May 2026.

_____
Robin Smith, City Secretary

_____
Norma Owen, Mayor Pro Tem

On a motion by Councilman Benefield, seconded by Councilman Prince, the above and foregoing ordinance was passed and approved.

EXHIBIT "A"
Legal Description and Survey

Exhibit "A"

METES AND BOUNDS

Being 7.056 acres, more or less, out of the G.M. Campbell Survey, Abstract No. 189, & D.W. Railroad Co. Survey, Abstract No. 2605, same being the property described in a Warranty Deed recorded in Volume 13380, Page 2223, Real Property Records, Travis County, Texas, same being the property described more particularly described by metes and bounds as follows:

BEGINNING at a 1/2 inch iron rod found for the South corner of this 7.056 acres, same being the West corner of Stanley D. & Sandra L. Miller 5.419 acres (Document Number 2004130875), same being on the northeast line of a 60 foot wide Right-of-Way called Boggy Ford Road, same also being the **POINT OF BEGINNING;**

THENCE along the line common with this 7.056 acres and said northeast Right-of-Way line of Boggy Ford Road the following courses and distances:

Along a curve to the left, with a radius of 351.08 feet, an arc length of 84.24 feet (called 84.25 feet), with a chord bearing North 58 degrees 40 minutes 58 seconds West, a chord length of 84.03 feet, and a delta angle of 13 degrees 44 minutes 50 seconds to a point for an interior corner;

North 65 degrees 23 minutes 19 seconds West (called 65 degrees 07 minutes 55 seconds West), a distance of 316.65 feet to a 1/2 inch iron rod found for the West corner of this 7.056 acres, same being the southeast corner of Machart Trust 7.931 acres (Document Number 2010111400);

THENCE along the line common with this 7.056 acres and said Machart 7.931 acres, North 28 degrees 17 minutes 44 seconds East (called North 28 degrees 33 minutes 41 seconds East), a distance of 871.19 feet (called 871.24 feet) to a 1/2 inch iron rod found for the North corner of this 7.056 acres, same being the southwest line of Stone Fountain Partners LLC. 10.26 acres (Document Number 2015075252);

THENCE along the line common with this 7.056 acres and said Fountain 10.26 acres, South 37 degrees 21 minutes 51 seconds East (called South 37 degrees 04 minutes 30 seconds East), at a distance of 381.92 feet pass a 1/2 inch iron rod found out 0.1 feet, and continuing for a total distance of 438.95 feet (called 438.99 feet) to a Cotton Spindle found in a tree for the East corner of this 7.056 acres, same being the West corner of Gary Jon & Judy A. Marchman 6.754 acres, same also being the said North corner of said Miller 5.419 acres;

THENCE along the line common with this 7.056 acres and said Miller 5.419 acres South 28 degrees 17 minutes 51 seconds West (called South 28 degrees 33 minutes 34 seconds West), a distance of 674.36 feet (called 674.30 feet) to the **POINT OF BEGINNING,** and containing 7.056 acres of land, more or less.

I hereby certify that these field notes were prepared from an actual survey made on the ground under my supervision and are true and correct to the best of my knowledge and belief. A survey plat of the above described tract prepared this day is hereby attached to and made a part hereof. Bearings shown herein are based on actual GPS observations, Texas State Plane Coordinates, Central Zone, Grid.

David L. Elzy
Registered Professional Land Surveyor
Texas Registration No. 4675
April 12th, 2021

EXHIBIT "A"
Legal Description and Survey

A-1 Legal Description

A-2 Final Plat – Unsigned

A-3 Existing Conditions Plan

OVERALL SITE DATA TABLE		
	EXISTING	PROPOSED
TOTAL SITE AREA (SQ-FT)	307,315.8	307,315.8
ZONING	TR-1	PDD
PROPOSED USE	UNDEVELOPED	HOTEL
NUMBER OF BUILDINGS	0	8
TOTAL GROSS FLOOR AREA (SQ-FT)	0	69,300
TOTAL BUILDING COVERAGE (SQ-FT)	0	40,300
TOTAL BUILDING COVERAGE (%)	0	13.1
OTHER IMPERVIOUS COVER (SQ-FT)	0	131,365
OTHER IMPERVIOUS COVER (%)	0	42.7
TOTAL IMPERVIOUS COVER (SQ-FT)	0	171,665.0
TOTAL IMPERVIOUS COVER (%)	0	55.9

HOTEL DATA TABLE	
TOTAL GROSS FLOOR AREA (SQ-FT)	73,116
NUMBER OF GUEST ROOMS	78
BUILDING COVERAGE (SQ-FT)	18,279
BUILDING COVERAGE (%)	5.9
BUILDING HEIGHT (STORIES)	4
BUILDING HEIGHT (FEET)	42
FOUNDATION TYPE	SLAB-ON-GRADE
F.F.E. (AMSL) - GROUND FLOOR	993

EVENTS CENTER DATA TABLE	
TOTAL GROSS FLOOR AREA (SQ-FT)	27,842
BUILDING COVERAGE (SQ-FT)	13,921
BUILDING COVERAGE (%)	4.5
BUILDING HEIGHT (STORIES)	2
BUILDING HEIGHT MAX. (FEET)	32
FOUNDATION TYPE	SLAB-ON-GRADE
F.F.E. (AMSL) - GROUND FLOOR	988.9

CASITAS DATA TABLE		
	PER UNIT	TOTAL
NUMBER OF BUILDINGS		6
TOTAL GROSS FLOOR AREA (SQ-FT)	2,700	16,200
NUMBER OF GUEST ROOMS	2	12
BUILDING COVERAGE (SQ-FT)	1,350	8,100
BUILDING COVERAGE (%)	0.4	2.6
BUILDING HEIGHT (STORIES)	2	N/A
BUILDING MAX. HEIGHT (FEET)	30	N/A
FOUNDATION TYPE	SLAB-ON GRADE	N/A
F.F.E. (AMSL) - GROUND FLOOR	983.5 - 979 - 944 943.3 - 938 - 936.5	N/A

0 25' 50' 100'
SCALE: 1" = 50'

LEGEND

EXISTING

- 735 — MAJOR CONTOUR
- 734 — MINOR CONTOUR
- PROPERTY BOUNDARY
- ADJOINER LINE
- #FM — WASTEWATER FORCE MAIN LINE
- #W — WATER LINE
- OE — OVERHEAD POWER LINE
- POWER POLE
- XXX — TREE TO REMAIN AND TREE ID NO.

PROPOSED

- 735 — MAJOR CONTOUR
- 734 — MINOR CONTOUR
- WW — WASTEWATER LINE
- #W — WATER LINE
- BUILDING
- CONCRETE
- PAVED DRIVE AND PARKING
- FH — FIRE HYDRANT

LAGO VISTA RESORT HOTEL USE/PARKING TABLE						
Use	Quantity	Unit	Use Parking Ratio	Parking Required		Parking Provided
Hotel/Motel	78	Rooms	1 PER ROOM	78		90
Event Space (Main)	6,000	sq. ft.	1 PER 500 SF	12		20
Event Space (Aux)	7,929	sq. ft.	1 PER 500 SF	16		17
Restaurant (Lobby Includes Bar)	4,000	sq. ft.	1 PER 250 SF	16		23
Casita	12	Rooms	1 PER ROOM	12		25
			Total Required	134	Total Provided	175

PARKING BY TYPE	
Hotel & Events Center	
STANDARD	133
PARALLEL	5
ADA STANDARD	9
ADA PARALLEL	3
SUBTOTAL:	150
Casitas	
STANDARD	23
ADA STANDARD	2
SUBTOTAL:	25
TOTAL	**175**

STATE OF TEXAS
WILLIAM E. PARNELL
121598
LICENSED
PROFESSIONAL ENGINEER
03/25/26

parnell engineering
www.parnellengineeringinc.com
500 E. WHITESTONE BLVD (#1419)
CEDAR PARK, TX 78613
512-431-8411
TEXAS REGISTRATION FIRM NO. F-19566

MARK	DATE	DESCRIPTION	BY

LAVERNE DEVELOPERS
VISTA VERDE RESORT HOTEL
19708 BOGGY FORD ROAD, LAGO VISTA, TEXAS 78645
LAND USE PLAN

Project No:
Designed By:
Drawn By:
Checked By:

B-1

File No: 2511.01

Copyright: Parnell Engineering

Bar Measures 1 inch, otherwise drawing not to scale

4/14/2026 12:02:06 PM - J:\2511_LAVERNE DEVELOPERS\2511.01 VISTA VERDE RESORT HOTEL\CAD\EXHIBITS\B-1 PROPOSED SITE PLAN.DWG - MIKE RECTOR

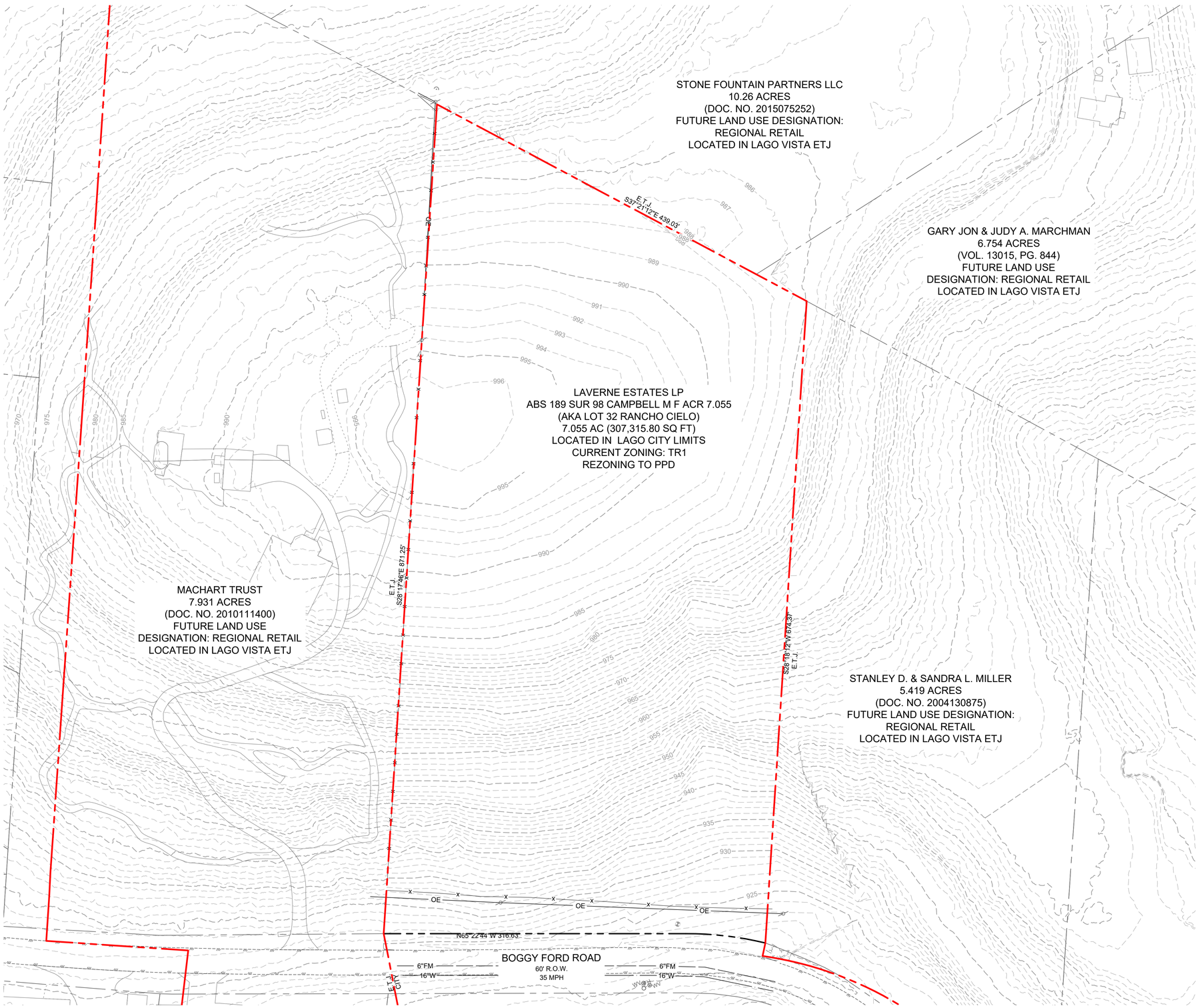

0 25' 50' 100'
SCALE: 1" = 50'

LEGEND

EXISTING

- CITY LIMITS/ETJ
- 735 MAJOR CONTOUR
- 734 MINOR CONTOUR
- PROPERTY BOUNDARY
- ADJOINER LINE
- #FM WASTEWATER FORCE MAIN LINE
- #W WATER LINE
- OE OVERHEAD POWER LINE
- FENCE
- POWER POLE

EXISTING UTILITIES NOTE:

ALL EXISTING UTILITIES ARE LOCATED IN BOGGY FORD ROAD R.O.W.

STATE OF TEXAS
WILLIAM E. PARNELL
121598
LICENSED
PROFESSIONAL ENGINEER
3/25/26

parnell engineering
www.parnellengineeringinc.com
500 E. WHITESTONE BLVD (#1419)
CEDAR PARK, TX 78613
512-431-8411
TEXAS REGISTRATION FIRM NO. F-19566

MARK	DATE	DESCRIPTION	BY

LAVERNE DEVELOPERS
VISTA VERDE RESORT HOTEL
19708 BOGGY FORD ROAD, LAGO VISTA, TEXAS 78645

EXISTING CONDITIONS PLAN

Project No:
Designed By:
Drawn By:
Checked By:

A-3

File No: 2511.01

Copyright: Parnell Engineering

Bar Measures 1 inch, otherwise drawing not to scale

3/25/2026 10:43:55 AM - J:\2511_LAVERNE DEVELOPERS\2511.01 VISTA VERDE RESORT HOTEL\CAD\EXHIBITS\A-2 PLAT.DWG - MIKE RECTOR

EXHIBIT "B"
Land Use Plan

B-1 Land Use Plan

B-2 Landscape Plan

B-3 Existing Drainage Areas

B-4 Proposed Drainage Areas

B-5 Proposed Elevation

B-6 Proposed Concept Drawings

B-7 Additional Concept Drawings

B-8 Austin ETJ Release Area Map

F-1 Vertical Fire Access Elevations

OVERALL SITE DATA TABLE		
	EXISTING	PROPOSED
TOTAL SITE AREA (SQ-FT)	307,315.8	307,315.8
ZONING	TR-1	PDD
PROPOSED USE	UNDEVELOPED	HOTEL
NUMBER OF BUILDINGS	0	8
TOTAL GROSS FLOOR AREA (SQ-FT)	0	69,300
TOTAL BUILDING COVERAGE (SQ-FT)	0	40,300
TOTAL BUILDING COVERAGE (%)	0	13.1
OTHER IMPERVIOUS COVER (SQ-FT)	0	131,365
OTHER IMPERVIOUS COVER (%)	0	42.7
TOTAL IMPERVIOUS COVER (SQ-FT)	0	171,665.0
TOTAL IMPERVIOUS COVER (%)	0	55.9

HOTEL DATA TABLE	
TOTAL GROSS FLOOR AREA (SQ-FT)	54,837
NUMBER OF GUEST ROOMS	78
BUILDING COVERAGE (SQ-FT)	18,279
BUILDING COVERAGE (%)	5.9
BUILDING HEIGHT (STORIES)	4
BUILDING HEIGHT (FEET)	42
FOUNDATION TYPE	SLAB-ON-GRADE
F.F.E. (AMSL) - GROUND FLOOR	993

EVENTS CENTER DATA TABLE	
TOTAL GROSS FLOOR AREA (SQ-FT)	54,837
BUILDING COVERAGE (SQ-FT)	13,921
BUILDING COVERAGE (%)	4.5
BUILDING HEIGHT (STORIES)	2
BUILDING HEIGHT MAX. (FEET)	32
FOUNDATION TYPE	SLAB-ON-GRADE
F.F.E. (AMSL) - GROUND FLOOR	988.9

CASITAS DATA TABLE		
	PER UNIT	TOTAL
NUMBER OF BUILDINGS		6
TOTAL GROSS FLOOR AREA (SQ-FT)	2,700	16,200
NUMBER OF GUEST ROOMS	2	12
BUILDING COVERAGE (SQ-FT)	1,350	8,100
BUILDING COVERAGE (%)	0.4	2.6
BUILDING HEIGHT (STORIES)	2	N/A
BUILDING MAX. HEIGHT (FEET)	30	N/A
FOUNDATION TYPE	SLAB-ON GRADE	N/A
F.F.E. (AMSL) - GROUND FLOOR	983.5 - 979 - 944 943.3 - 938 - 936.5	N/A

0 25' 50' 100'
SCALE: 1" = 50'

LEGEND

EXISTING

- 735 — MAJOR CONTOUR
- 734 — MINOR CONTOUR
- PROPERTY BOUNDARY
- ADJOINER LINE
- #FM — WASTEWATER FORCE MAIN LINE
- #W — WATER LINE
- OE — OVERHEAD POWER LINE
- POWER POLE
- XXX — TREE TO REMAIN AND TREE ID NO.

PROPOSED

- 735 — MAJOR CONTOUR
- 734 — MINOR CONTOUR
- WW — WASTEWATER LINE
- #W — WATER LINE
- BUILDING
- CONCRETE
- PAVED DRIVE AND PARKING
- FH — FIRE HYDRANT

LAGO VISTA RESORT HOTEL USE/PARKING TABLE						
Use	Quantity	Unit	Use Parking Ratio	Parking Required		Parking Provided
Hotel/Motel	78	Rooms	1 PER ROOM	78		90
Event Space (Main)	6,000	sq. ft.	1 PER 500 SF	12		20
Event Space (Aux)	7,929	sq. ft.	1 PER 500 SF	16		17
Restaurant (Lobby Includes Bar)	4,000	sq. ft.	1 PER 250 SF	16		23
Casita	12	Rooms	1 PER ROOM	12		25
			Total Required	134	Total Provided	175

PARKING BY TYPE	
Hotel & Events Center	
STANDARD	133
PARALLEL	5
ADA STANDARD	9
ADA PARALLEL	3
SUBTOTAL:	150
Casitas	
STANDARD	23
ADA STANDARD	2
SUBTOTAL:	25
TOTAL	**175**

STATE OF TEXAS
WILLIAM E. PARNELL
121598
LICENSED
PROFESSIONAL ENGINEER
03/25/26

parnell engineering
www.parnellengineeringinc.com
500 E. WHITESTONE BLVD (#1419)
CEDAR PARK, TX 78613
512-431-8411
TEXAS REGISTRATION FIRM NO. F-19566

MARK	DATE	DESCRIPTION	BY

LAVERNE DEVELOPERS
VISTA VERDE RESORT HOTEL
19708 BOGGY FORD ROAD, LAGO VISTA, TEXAS 78645

LAND USE PLAN

Project No:
Designed By:
Drawn By:
Checked By:

B-1

File No: 2511.01

Copyright: Parnell Engineering

Bar Measures 1 inch, otherwise drawing not to scale

4/14/2026 9:17:42 AM - J:\2511_LAVERNE DEVELOPERS\2511.01 VISTA VERDE RESORT HOTEL\CAD\EXHIBITS\B-1 PROPOSED SITE PLAN.DWG - MIKE RECTOR

0 25' 50' 100'
SCALE: 1" = 50'

LEGEND

EXISTING

- 735 — MAJOR CONTOUR
- 734 — MINOR CONTOUR
- PROPERTY BOUNDARY
- ADJOINER LINE
- #FM — WASTEWATER FORCE MAIN LINE
- #W — WATER LINE
- OE — OVERHEAD POWER LINE
- POWER POLE
- XXX — TREE TO REMAIN AND TREE ID NO.

PROPOSED

- 735 — MAJOR CONTOUR
- 734 — MINOR CONTOUR
- WW — WASTEWATER LINE
- #W — WATER LINE
- BUILDING
- CONCRETE
- PAVED DRIVE AND PARKING
- LANDSCAPED AREAS (PER CITY OF LAGO VISTA LANDSCAPING REQUIREMENTS AND GUIDELINES)
- FH — FIRE HYDRANT
- TREE

STATE OF TEXAS
WILLIAM E. PARNELL
121598
LICENSED
PROFESSIONAL ENGINEER
03/25/26

parnell engineering
www.parnellengineeringinc.com
500 E. WHITESTONE BLVD (#1419)
CEDAR PARK, TX 78613
512-431-8411
TEXAS REGISTRATION FIRM NO. F-19566

MARK	DATE	DESCRIPTION	BY

LAVERNE DEVELOPERS
VISTA VERDE RESORT HOTEL
19708 BOGGY FORD ROAD, LAGO VISTA, TEXAS 78645

LANDSCAPE PLAN

Project No:
Designed By:
Drawn By:
Checked By:

B-2

File No: 2511.01

Copyright: Parnell Engineering

Bar Measures 1 inch, otherwise drawing not to scale

3/25/2026 10:42:05 AM - J:\2511_LAVERNE DEVELOPERS\2511.01 VISTA VERDE RESORT HOTEL\CAD\EXHIBITS\B-2 LANDSCAPE PLAN.DWG - MIKE RECTOR

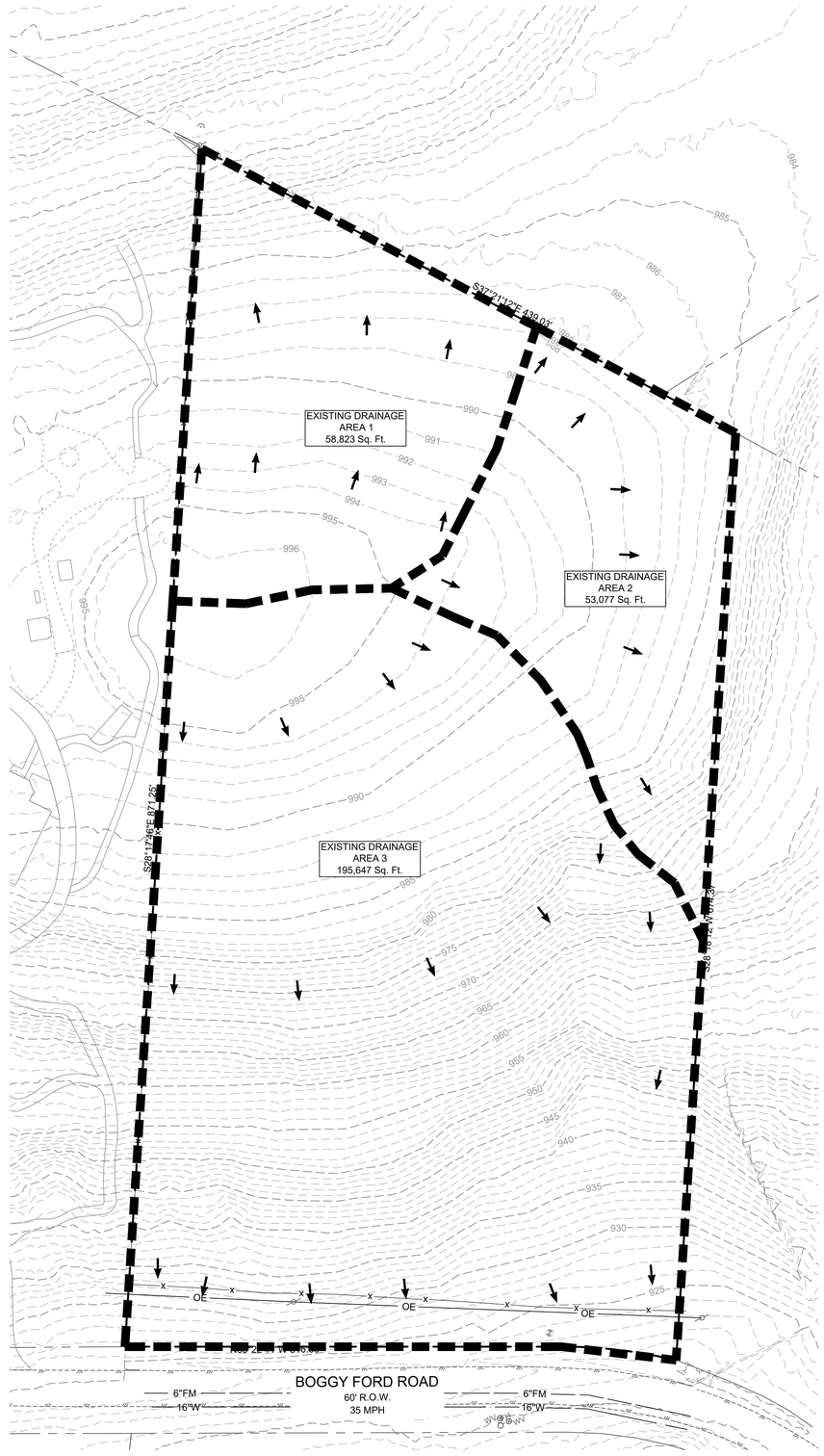

SCALE: 1" = 50'

LEGEND

EXISTING

- 735 — MAJOR CONTOUR
- 734 — MINOR CONTOUR
- PROPERTY BOUNDARY
- ADJOINER LINE
- #FM — WASTEWATER FORCE MAIN LINE
- #W — WATER LINE
- OE — OVERHEAD POWER LINE
- x — FENCE
- POWER POLE

STATE OF TEXAS
WILLIAM E. PARNELL
121598
LICENSED
PROFESSIONAL ENGINEER
03/25/26

parnell engineering
www.parnellengineeringinc.com
500 E. WHITESTONE BLVD (#1419)
CEDAR PARK, TX 78613
512-431-8411
TEXAS REGISTRATION FIRM NO. F-19566

MARK	DATE	DESCRIPTION	BY

LAVERNE DEVELOPERS
VISTA VERDE RESORT HOTEL
19708 BOGGY FORD ROAD, LAGO VISTA, TEXAS 78645
EXISTING DRAINAGE AREAS

Project No:
Designed By:
Drawn By:
Checked By:

B-3

File No: 2511.01

Copyright: Parnell Engineering

Bar Measures 1 inch, otherwise drawing not to scale

3/25/2026 10:41:35 AM - JJ:2511_LAVERNE DEVELOPERS\2511.01 VISTA VERDE RESORT HOTEL\CAD\EXHIBITS\B-3 EXISTING DRAINAGE AREAS.DWG - MIKE RECTOR

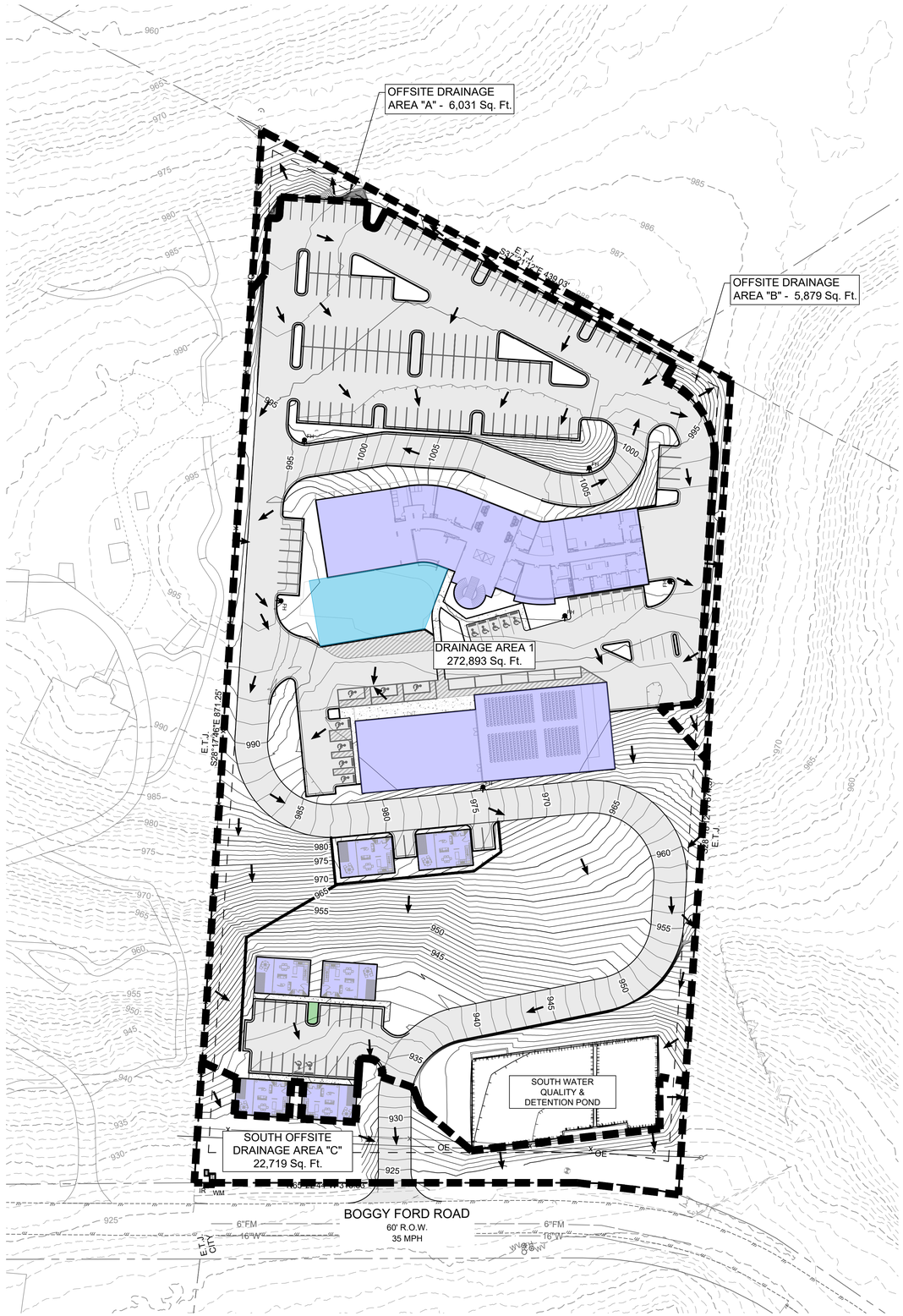

0 25' 50' 100'
SCALE: 1" = 50'

LEGEND

EXISTING

- 735 — MAJOR CONTOUR
- 734 — MINOR CONTOUR
- PROPERTY BOUNDARY
- ADJOINER LINE
- #FM — WASTEWATER FORCE MAIN LINE
- #W — WATER LINE
- OE — OVERHEAD POWER LINE
- POWER POLE
- XXX — TREE TO BE REMOVED AND TREE ID NO.
- XXX — TREE TO REMAIN AND TREE ID NO.

PROPOSED

- 735 — MAJOR CONTOUR
- 734 — MINOR CONTOUR
- BUILDING
- CONCRETE
- PAVED DRIVE AND PARKING
- FH — FIRE HYDRANT

STATE OF TEXAS
WILLIAM E. PARNELL
121598
LICENSED
PROFESSIONAL ENGINEER
03/25/26

parnell engineering
www.parnellengineeringinc.com
500 E. WHITESTONE BLVD (#1419)
CEDAR PARK, TX 78613
512-431-8411
TEXAS REGISTRATION FIRM NO. F-19566

MARK	DATE	DESCRIPTION	BY

LAVERNE DEVELOPERS
VISTA VERDE RESORT HOTEL
19708 BOGGY FORD ROAD, LAGO VISTA, TEXAS 78645

PROPOSED DRAINAGE AREA PLAN

Project No:
Designed By:
Drawn By:
Checked By:

B-4

File No: 2511.01

Copyright: Parnell Engineering

Bar Measures 1 inch, otherwise drawing not to scale

4/14/2026 9:18:19 AM - J:\2511_LAVERNE DEVELOPERS\2511.01 VISTA VERDE RESORT HOTEL\CAD\EXHIBITS\B-4 PROPOSED DRAINAGE AREA PLAN.DWG - MIKE RECTOR

EXHIBIT "C"
Signage Plan

C-1 Signage Plan

0 25' 50' 100'
SCALE: 1" = 50'

LEGEND

EXISTING

- 735 — MAJOR CONTOUR
- 734 — MINOR CONTOUR
- PROPERTY BOUNDARY
- ADJOINER LINE
- #FM — WASTEWATER FORCE MAIN LINE
- #W — WATER LINE
- OE — OVERHEAD POWER LINE
- POWER POLE
- XXX — TREE TO REMAIN AND TREE ID NO.

PROPOSED

- BUILDING
- CONCRETE
- PAVED DRIVE AND PARKING
- LANDSCAPED AREAS (PER CITY OF LAGO VISTA LANDSCAPING REQUIREMENTS AND GUIDELINES)
- FH — FIRE HYDRANT
- DIRECTIONAL SIGN
- IDENTIFICATION SIGN

SIGNAGE NOTE:

SIGNAGE SHOWN IS FOR VEHICULAR TRAFFIC ONLY. SMALL PLACARDS AND SIGNS FOR PEDESTRIAN USAGE IS NOT SHOWN.

STATE OF TEXAS
WILLIAM E. PARNELL
121598
LICENSED
PROFESSIONAL ENGINEER
03/25/26

parnell engineering
www.parnellengineeringinc.com
500 E. WHITESTONE BLVD (#1419)
CEDAR PARK, TX 78613
512-431-8411
TEXAS REGISTRATION FIRM NO. F-19566

MARK	DATE	DESCRIPTION	BY

LAVERNE DEVELOPERS
VISTA VERDE RESORT HOTEL
19708 BOGGY FORD ROAD, LAGO VISTA, TEXAS 78645
SIGNAGE PLAN

Project No:
Designed By:
Drawn By:
Checked By:

C-1

File No: 2511.01

Copyright: Parnell Engineering

Bar Measures 1 inch, otherwise drawing not to scale

3/25/2026 10:46:34 AM - J:\2511_LAVERNE DEVELOPERS\2511.01 VISTA VERDE RESORT HOTEL\CAD\EXHIBITS\C-1 SIGNAGE PLAN.DWG - MIKE RECTOR

EXHIBIT “D”
Tree Preservation Plan

D-1 Tree Preservation Plan

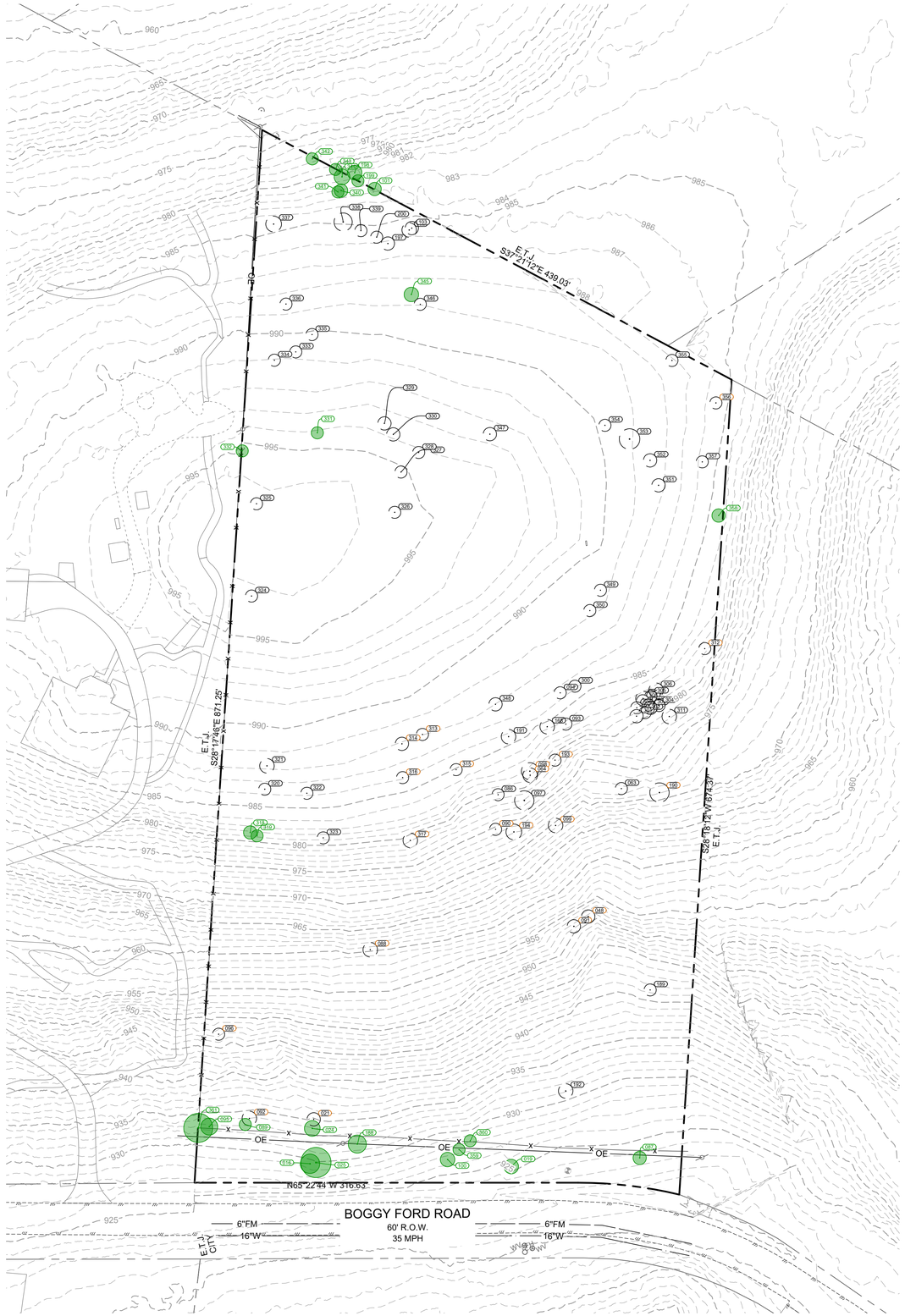

TREES TO REMAIN	
TREE #	DESCRIPTION
016	16" OAK
019	12" OAK
024	13" OAK
025	25" OAK
087	11" OAK
089	10" OAK
095	14" OAK
100	12" OAK
101	11" OAK
188	15" OAK
198	12" OAK
199	10" OAK
300	10" OAK
318	11" OAK
319	10" OAK
331	10" OAK
332	10" OAK
340	11" OAK
341	10" OAK
342	10" OAK

TREES TO REMAIN	
TREE #	DESCRIPTION
343	10" OAK
344	13" OAK
345	12" OAK
358	11" OAK
359	10" OAK
360	10" OAK
361	24" CEDAR

TREES TO REMOVE	
TREE #	DESCRIPTION
021	11" OAK
048	11" OAK
063	10" OAK
064	12" OAK
086	10" OAK
088	12" OAK
090	10" OAK
091	11" OAK
092	12" OAK
093	10" OAK
094	10" OAK
096	10" OAK
097	16" OAK
098	14" OAK
099	12" OAK
102	12" OAK
103	11" OAK
168	12" OAK
189	10" OAK
190	16" OAK
191	12" OAK
192	12" OAK
193	10" OAK
194	13" OAK
197	11" OAK
200	10" OAK
300	10" OAK
301	11" OAK
302	10" OAK
303	11" OAK
304	10" OAK
305	10" OAK
306	12" OAK
307	12" OAK
308	10" OAK
309	10" OAK
310	10" OAK
311	12" OAK
312	10" OAK
313	10" OAK

TREES TO REMOVE	
TREE #	DESCRIPTION
314	11" OAK
315	10" OAK
316	10" OAK
317	12" OAK
320	10" OAK
321	12" OAK
322	10" OAK
323	10" OAK
324	10" OAK
325	10" OAK
326	10" OAK
327	10" OAK
328	10" OAK
329	11" OAK
330	11" OAK
333	10" OAK
334	10" OAK
335	10" OAK
336	10" OAK
337	13" OAK
338	15" OAK
339	10" OAK
346	10" OAK
347	11" OAK
348	11" OAK
349	10" OAK
350	10" OAK
351	11" OAK
352	11" OAK
353	17" OAK
354	10" OAK
355	10" OAK
356	10" OAK
357	10" OAK

0 25' 50' 100'
SCALE: 1" = 50'

LEGEND

EXISTING

- 735 — MAJOR CONTOUR
- 734 — MINOR CONTOUR
- PROPERTY BOUNDARY
- ADJOINER LINE
- #FM — WASTEWATER FORCE MAIN LINE
- #W — WATER LINE
- OE — OVERHEAD POWER LINE
- POWER POLE
- XXX — TO BE REMOVED TREE WITH ID NO.
- XXX — TO REMAIN TREE WITH ID NO.

STATE OF TEXAS
WILLIAM E. PARNELL
121598
LICENSED
PROFESSIONAL ENGINEER
3/25/26

parnell engineering
www.parnellengineeringinc.com
500 E. WHITESTONE BLVD (#1419)
CEDAR PARK, TX 78613
512-431-8411
TEXAS REGISTRATION FIRM NO. F-19566

MARK	DATE	DESCRIPTION	BY

LAVERNE DEVELOPERS
VISTA VERDE RESORT HOTEL
19708 BOGGY FORD ROAD, LAGO VISTA, TEXAS 78645
TREE PRESERVATION PLAN

Project No:
Designed By:
Drawn By:
Checked By:

D-1

File No: 2511.01

Copyright: Parnell Engineering

Bar Measures 1 inch, otherwise drawing not to scale

3/25/2026 10:41:04 AM - J:\2511_LAVERNE DEVELOPERS\2511.01 VISTA VERDE RESORT HOTEL\CAD\EXHIBITS\D-1 TREE PRESERVATION PLAN.DWG - MIKE RECTOR

EXHIBIT "E"
Traffic Impact Analysis

E-1 Traffic Impact Analysis Here

Traffic Impact Analysis Update for 19708 Boggy Ford Road Development in Lago Vista, Texas

WEDNESDAY, JANUARY 7, 2026

Response to Comments in Blue

- Somesh R. Katukuri, P.E.

Prepared By

PROMET ENGINEERS
TRANSPORTATION ENGINEERING & PLANNING

STATE OF TEXAS
SOMESHWAR R. KATUKURI
141380
LICENSED
PROFESSIONAL ENGINEER

01/07/2025

PROMET ENGINEERS
214 205 8683
9550 Forest Lane, Suite 342, Dallas, TX 75243
somesh@prometengineers.com
www.prometengineers.com

TABLE OF CONTENTS

I. INTRODUCTION 4
A. PURPOSE 4
B. METHODOLOGY 4
II. EXISTING AND PROPOSED LAND USE 5
A. SITE LOCATION AND STUDY AREA 5
B. EXISTING AND PROPOSED DEVELOPMENT 5
III. EXISTING AND PROPOSED TRANSPORTATION SYSTEM 6
A. THOROUGHFARE SYSTEM 6
B. EXISTING TRAFFIC VOLUMES 6
C. PROJECTED TRAFFIC VOLUMES 6
IV. SITE TRAFFIC CHARACTERISTICS 7
A. PROPOSED SITE TRIP GENERATION 7
B. TRIP DISTRIBUTION AND TRAFFIC ASSIGNMENT 8
V. TRAFFIC ANALYSIS 8
A. LEVEL OF SERVICE EVALUATION 8
A.1. Level of Service 8
A.2. Results 8
VI. CONCLUSIONS AND RECOMMENDATIONS 11

LIST OF FIGURES

Figure 1: TIA Methodology

LIST OF TABLES

Table 1. Projected Trip Generation

Table 2. Project Trip Generation – For Conference

Table 3. Level of Service (LOS) Criteria for Intersections

Table 4. Level of Service – Unsignalized Intersections

Table 5. Level of Service – Signalized Intersections

Table 6. Level of Service – Signalized Intersections – With Mitigation

SUPPORTING DOCUMENTATION

APPENDIX A. Traffic Volumes

APPENDIX B. Collected Traffic Data

APPENDIX C. Site-Traffic Distribution & Assignments

APPENDIX D. Synchro Reports

APPENDIX E. Original TIA Report

I. INTRODUCTION

This report documents the methodology and results of a traffic impact analysis (TIA) update conducted by Promet Engineers, LLC (PROMET) in connection with the proposed hotel development (hereinafter referred to as the Project) at 19708 Boggy Ford Road, Lago Vista, Texas. The site's overall area is approximately 6 acres. The project is proposed to be built by the end of 2026. This study is an update of the original TIA prepared by GBA Companies Inc. in January 2024.

A. PURPOSE

This study aims to determine the project's traffic impacts on the study intersections near the site, including site driveways. The intensity of the land uses in the proposed development has changed since the original TIA was prepared. The City of Lago Vista requested an update of the TIA for the latest site plan. The TIA update has been prepared following industry standards to fulfill the City's requirements.

B. METHODOLOGY

The traffic impact analysis evaluates existing and projected traffic operations within the study area during weekday morning and afternoon peak hour traffic conditions, when the combination of adjacent streets and the project trips is expected to be most significant.

The TIA study follows the five broad steps shown in **Figure 1**.

Figure 1. TIA Methodology

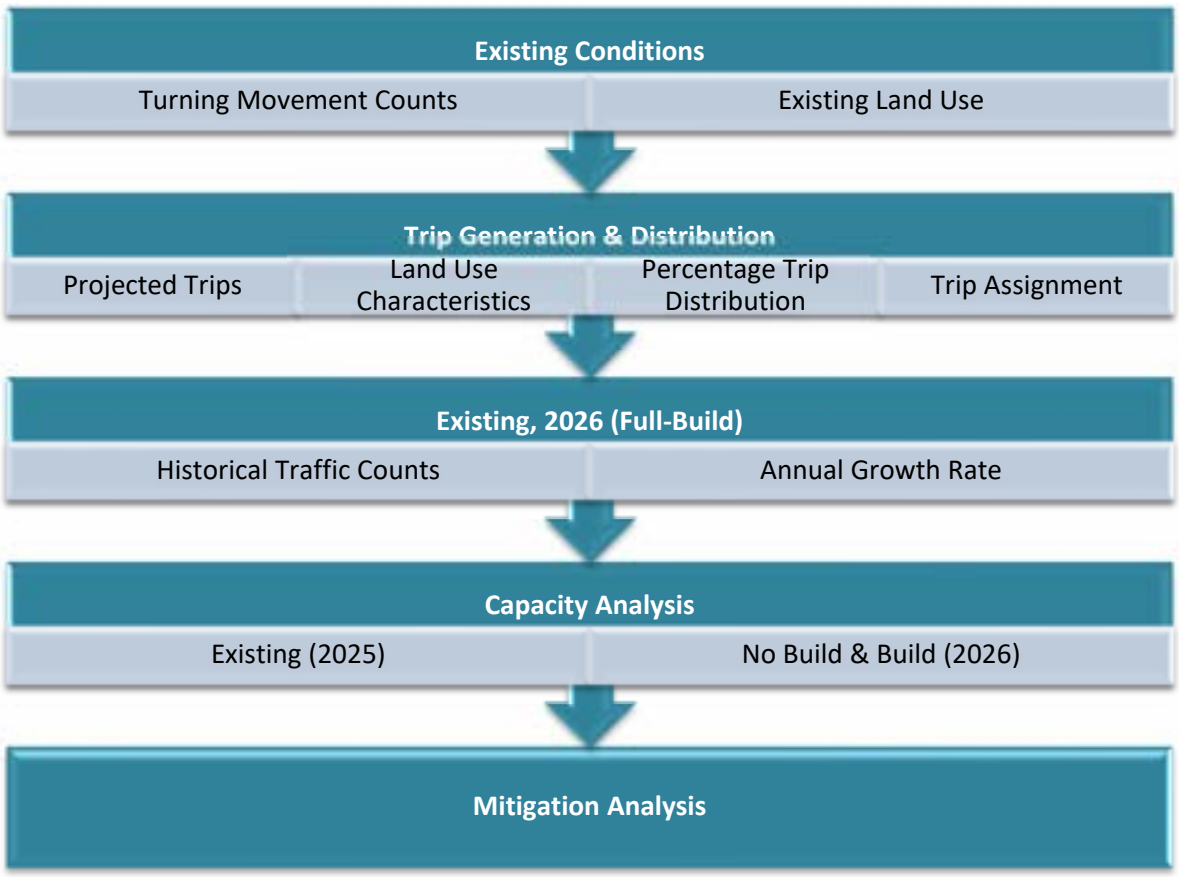

Analysis Periods

The analysis periods for the study are consistent with the original TIA. The turning movements counts at the study intersections were taken from the original TIA. The original TIA is provided in **Appendix E**. The following are the periods collected in the original study:

Peak Hours	Time Period Collected & Analyzed
AM Peak	7:00 AM – 9:00 AM
PM Peak	2:00 PM – 7:00 PM

Analysis Scenarios

The study analyzed the following scenarios:

- Existing Year (2025)
- No-Build (2026)
- Build (2026)

II. EXISTING AND PROPOSED LAND USE

This report section provides current and proposed land uses at the project site.

A. SITE LOCATION AND STUDY AREA

The proposed site is at 19708 Boggy Ford Road, Lago Vista, Texas. The site is currently undeveloped. The site location map and study area intersections are shown in **Exhibit 1**, which follows the report.

The following are the existing and proposed intersections analyzed in the study:

Signalized:

1. Lohman Ford Road at Dawn Drive
2. Lohman Ford Road at Boggy Ford Road/Shoreline Ranch Drive

Unsignalized:

3. Boggy Ford Road at National Drive
4. Boggy Ford Road at Driveway 1 (Proposed)

B. EXISTING AND PROPOSED DEVELOPMENT

The site is currently undeveloped. The proposed development's land uses include 90 hotel rooms, 8 casitas, and a 4,000 SF high-turnover sit-down restaurant. The concept site plan, prepared by Parnell Engineering, is provided in **Exhibit 2**.

The proposed land uses and gross floor areas for the project are as follows:

- Hotel: 90 Rooms
- Casitas: 8
- High-Turnover Sit-Down Restaurant: 4,000 SF

- Hotel Conference Room with a maximum of 300 attendees

III. EXISTING AND PROPOSED TRANSPORTATION SYSTEM

This section of the report provides information about the existing and proposed thoroughfare system and existing and projected traffic volumes.

A. THOROUGHFARE SYSTEM

1. Boggy Ford Road [Adjacent to the site]

    - Existing operation and cross-section: two lanes, two-way, undivided
    - Speed Limit: 35 mph (posted)
    - City of Lago Vista Functional Classification: Major Collector

2. Lohman Ford Road

    - Existing operation and cross-section: two lanes, two-way, undivided
    - Speed Limit: 50 mph (posted)
    - City of Lago Vista Functional Classification: Minor Arterial

The existing and proposed roadway lane geometry and traffic control are shown in **Exhibit 3 & 4**.

B. EXISTING TRAFFIC VOLUMES

Traffic counts used in this TIA update were taken from the original study. To establish the existing volumes for this TIA update, the 2023 volumes used in the original study were grown to 2025 at a 2% annual growth rate. The raw turning movement counts at the study intersections are shown in **Appendix B**.

C. PROJECTED TRAFFIC VOLUMES

The projected turning movement volumes were developed for the project build-out year 2026. To determine the no-build (2026) volumes for the TIA update, the original study's no-build volumes were projected to grow at a 2% annual rate through 2026. The no-build volumes considered the site traffic from the future developments in the vicinity that are planned to be built before the proposed project. The following are the two future projects considered as background projects for the analysis:

- Shoreline Ranch: 697 single-family residential units

- Nature's Point

    - Multifamily Housing: 50 Dwelling Units
    - Resort Hotel – 150 Rooms
    - Shopping Center – 8,000 SF
    - Quality Restaurant – 6,000 SF

The exact build-out year for the two projects was unknown when the study was prepared. As the original study included traffic from the above-mentioned projects in the no-build conditions, as explained in the

preceding paragraph, the 2025 no-build volumes from the original study were adjusted at a 2% annual growth rate to 2026 and used as background volumes. The future background volumes for the study intersections, calculated under no-build and build conditions, are shown in **Appendix A**.

IV. SITE TRAFFIC CHARACTERISTICS

This section of the report provides information regarding the projected number of trips generated by the proposed project. It also discusses traffic distribution and assignment.

A. PROPOSED SITE TRIP GENERATION

The Institute of Transportation Engineers (ITE) Trip Generation Manual (12th Edition) was used to determine the number of trips for the project. The land use codes considered for the proposed project are 310 (Hotel), 260 (Recreational Homes), and 932 (High-Turnover Sit-Down Restaurant). **Table 1** shows the projected trip generation for the proposed project. The hotel will have a conference room with a maximum attendee capacity of 300 members. The original traffic study did not consider the special events or conferences at the site. This TIA update analyzed an additional scenario with a conference between 9:00 AM and 6:00 PM. The overall traffic projected by the site was added to the adjacent roadway network based on the global traffic distribution.

Projected trips shown for LUC 260 do not match the rates in ITE Trip Generator. Please update the number of trips generated, distributed, and all Synchro models to match accordingly.

Table 1. Projected Trip Generation

Land Use	Quantity	Daily Trip Ends (Weekday)	AM Peak-Hour Trip Ends (Adjacent Street Peak)	PM Peak-Hour Trip Ends (Adjacent Street Peak)
			Total (In/Out)	**Total** (In/Out)
Hotel (ITE#310)	90 Rooms	526	**31** (16/15)	**42** (22/20)
Recreational Homes (ITE#260)	8	35	**2** (1/1)	**3** (2/1)
High Turnover Sit-Down Restaurant	4,000 SF	415	**36** (20/16)	**37** (22/15)
		976	**69** (37/32)	**82** (46/36)

Response: The comment is not valid. The capacity analysis has been performed for the adjacent street peak hour which occurs between 7am-9am & 4pm-6pm on a weekday. The trip generation used in the analysis is correct and no changes are required.

e hotel conference event will generate a maximum of 300 attendees, trips (inbound & outbound) based on an average vehicle occupancy ate potential impacts during the standard peak hours, trips have been oach to capture worst-case scenarios. Accordingly, 150 inbound and e AM peak hour. In the PM peak hour, 15 inbound and 150 outbound attendees remain on-site or in the vicinity for additional meetings, wing the event. This distribution reflects a high but plausible traffic lly accounts for peak hour impacts. **Table 2** shows the projected trip

Table 2. Projected Trip Generation – For Conference

Land Use	Quantity	AM Peak-Hour Trip Ends (Adjacent Street Peak)	PM Peak-Hour Trip Ends (Adjacent Street Peak)
		Total (In/Out)	**Total** (In/Out)
Hotel	300	**165** (150/15)	**165** (15/165)

Conference	Attendees		
Total		**165** (150/15)	**165** (15/165)

B. TRIP DISTRIBUTION AND TRAFFIC ASSIGNMENT

The general trip distribution for the proposed site was taken from the original study to stay consistent with the initial analysis performed on the site. The traffic assignment is provided in **Appendix C**.

V. TRAFFIC ANALYSIS

This section describes the overall quality of the traffic flow at the study area intersections during the AM and PM peak hours.

A. LEVEL OF SERVICE EVALUATION

The analysis is based on Synchro capacity analysis methodologies and procedures in the Highway Capacity Manual, 6th Edition (HCM). This section presents the evaluation criteria and summarizes the results of the capacity analyses.

A.1. Level of Service

The intersection level of service (LOS) analyses were performed following the procedures recommended by the Highway Capacity Manual, 6th Edition (HCM) Level of Service methodologies to evaluate signalized and unsignalized intersections. Traffic analysis software Synchro Version 11 was used to evaluate the operations of the study intersections. The LOS criteria for signalized and unsignalized intersections are below in **Table 3.** LOS 'A' is considered a free-flow condition, and LOS 'F' is a failing condition. LOS 'D' is generally considered acceptable during peak hours.

Table 3. Level of Service (LOS) Criteria for Intersections

LOS	Signalized Intersection	Unsignalized Intersections
	Delay (sec/veh)	Delay (sec/veh)
A	0-10	0-10
B	>10-20	>10-15
C	>20-35	>15-25
D	>35-55	>25-35
E	>55-80	>35-50
F	>80	>50

Source: Highway Capacity Manual 6th Edition, Transportation Research Board

A.2. Results

Tables 4 & 5 summarize the capacity analysis for AM and PM peak hours. The performance measure is based on the average delay in seconds per vehicle by intersection for the signalized and unsignalized intersections. The traffic signal timings for the signalized intersection were obtained from the original study. The traffic signals were optimized where necessary for the no build and build conditions. Detailed Synchro reports are available in **Appendix D**. **Table 6** provides the capacity analysis results with the necessary mitigation measures at the failing intersections.

Table 4. Level of Service – Signalized Intersections

		Existing		2026 No-Build		2026 Build		2026 Build (w Conference)	
		AM	PM	AM	PM	AM	PM	AM	PM
Lohman Ford Road at Dawn Drive		D (44.8)	C (26.4)	F (87.5)	E (62.8)	F (93.5)	E (66.2)	F (95.8)	E (66.4)
	EB	E (64.3)	D (41.5)	F (>100)	F (>100)	F (>100)	F (>100)	F (>100)	F (>100)
	WB	F (96.7)	E (75.9)	F (>100)	F (96.0)	F (>100)	F (>100)	F (>100)	F >100)
	NB	D (48.7)	B (18.8)	F (>100)	C (24.9)	F (>100)	C (24.2)	F (>100)	C (32.6)
									E (68.3)
Lohman Ford Road at Shoreline Ranc									E (64.2)
									E (62.3)
									B (12.7)
									B (19.9)
									F (87.5)

Response: The LOS results from Synchro Timing were used because HCM 6th Edition methodology does not support turning movements with shared & exclusive lanes. Below is a snapshot from Synchro. No action necessary.

HCM 6th Signalized Intersection Summary 2026 Build - Mitigation
1: Lohman Ford & Dawn Drive Timing Plan: AM

HCM 6th Edition methodology does not support turning movements with shared & exclusive lanes.

									onference)
									PM
National Drive at Boggy Ford Road	NB	B (13.5)	B (13.9)	B (14.0)	B (14.7)	B (14.0)	B (14.8)	B (14.2)	B (14.8)
	EBL	A (7.7)	A (8.0)	A (7.8)	A (8.1)	A (7.8)	A (8.1)	A (7.8)	A (8.1)
	WBL	A (0.0)	A (7.6)	A (0.0)	A (7.7)	A (0.0)	A (7.7)	A (0.0)	A (7.7)
	SB	B (14.4)	B (14.3)	C (15.2)	C (15.4)	C (15.3)	C (15.5)	C (15.6)	C (15.5)
Site Driveway 1 at Boggy Ford Road	EBL	- -	- -	- -	- -	A (7.9)	A (8.8)	A (8.3)	A (8.8)
	SB	-	- -	- -	- -	B (14.2)	C (16.8)	C (16.4)	D (30.5)

Table 6. Level of Service – Signalized Intersections – With Mitigation

		2026 Build		2026 Build w Conference	
		AM	PM	AM	PM
Lohman Ford Road at Dawn Drive		C (33.8)	C (32.1)	D (35.2)	C (33.8)
With Mitigation	**EB**	E (58.3)	D (53.6)	E (58.3)	D (53.6)
	WB	D (36.4)	D (40.5)	D (36.4)	D (40.5)
	NB	D (37.6)	B (19.3)	D (39.7)	C (23.7)
	SB	B (15.5)	C (32.9)	B (19.6)	C (34.6)
Lohman Ford Road at Shoreline Ranch Road		B (10.2)	B (10.8)	B (18.6)	B (14.8)
With Mitigation	**EB**	B (15.0)	C (22.0)	C (31.0)	C (33.0)
	WB	A (3.6)	A (6.1)	A (3.6)	A (5.9)
	NB	B (10.2)	A (6.7)	B (18.7)	A (7.0)
	SB	A (7.7)	A (8.1)	B (12.4)	A (8.6)

The results for the intersection with proposed mitigation did not use HCM LOS results. Please update Synchro reports and tables to show the correct HCM 6th edition results.

KEY:

A, B, C, D, E, F = Level-of-Service for each intersection approach
NB, SB, EB, WB = North-, South-, East-, Westbound approach
L, T, R = Left, Through, Right Approach turning movement
AM = AM Peak Hour of Adjacent Street
PM = AM Peak Hour of Adjacent Street

VI. CONCLUSIONS AND RECOMMENDATIONS

The analysis of traffic conditions at both existing and proposed conditions, considering the background annual traffic growth and the proposed site's traffic, indicates a minimal impact on the local roadway system. The following are the findings from the traffic impact analysis update performed on the proposed site:

- At project buildout, the proposed mixed-use development is projected to generate approximately 976 weekday trips, 69 in the AM peak hour and 82 in the PM peak hour. Additionally, when conferences are held at the hotel, 165 trips are expected during the AM and PM peak hours, with a maximum capacity of 300 attendees.

- Based on the capacity analysis results, the findings from this TIA update are consistent with the original TIA. The additional scenario (hotel with conference) analyzed in this study demonstrated that the recommended mitigation measures from the original study can accommodate the projected site traffic. The following are the improvements necessary at the study intersections:

  1. <u>Lohman Ford Road/Dawn Drive:</u>

     - Eastbound left-turn lane
     - Receiving lane on the northern leg for eastbound left-turns
     - Channelize the westbound right-turn movement

  2. <u>Lohman Ford Road and Boggy Ford Road/Shoreline Ranch Drive:</u>

     - Exclusive eastbound left-turn lane
     - Receiving lane on the northern leg for eastbound left-turns

- The proposed Site Driveway 1 on Boggy Ford Road is expected to operate acceptably with no operational issues. Due to the projected volumes, when a conference occurs at the hotel, it is recommended that a westbound right-turn lane be provided for inbound vehicles to separate from the through movement and decelerate safely into the site driveway.

- The roadway enhancements proposed by the City, as detailed in the 2030 Comprehensive Plan[1] and the 2024 Comprehensive Lago Vista Traffic Study conducted by Freese & Nichols, are anticipated to provide adequate capacity and operational efficiency to accommodate projected background traffic volumes as well as site-generated traffic associated with the proposed development.

*** END OF MEMO ***

[1]https://cms7files.revize.com/lagovistatx/document_center/lv2030comprehensiveplan.pdf

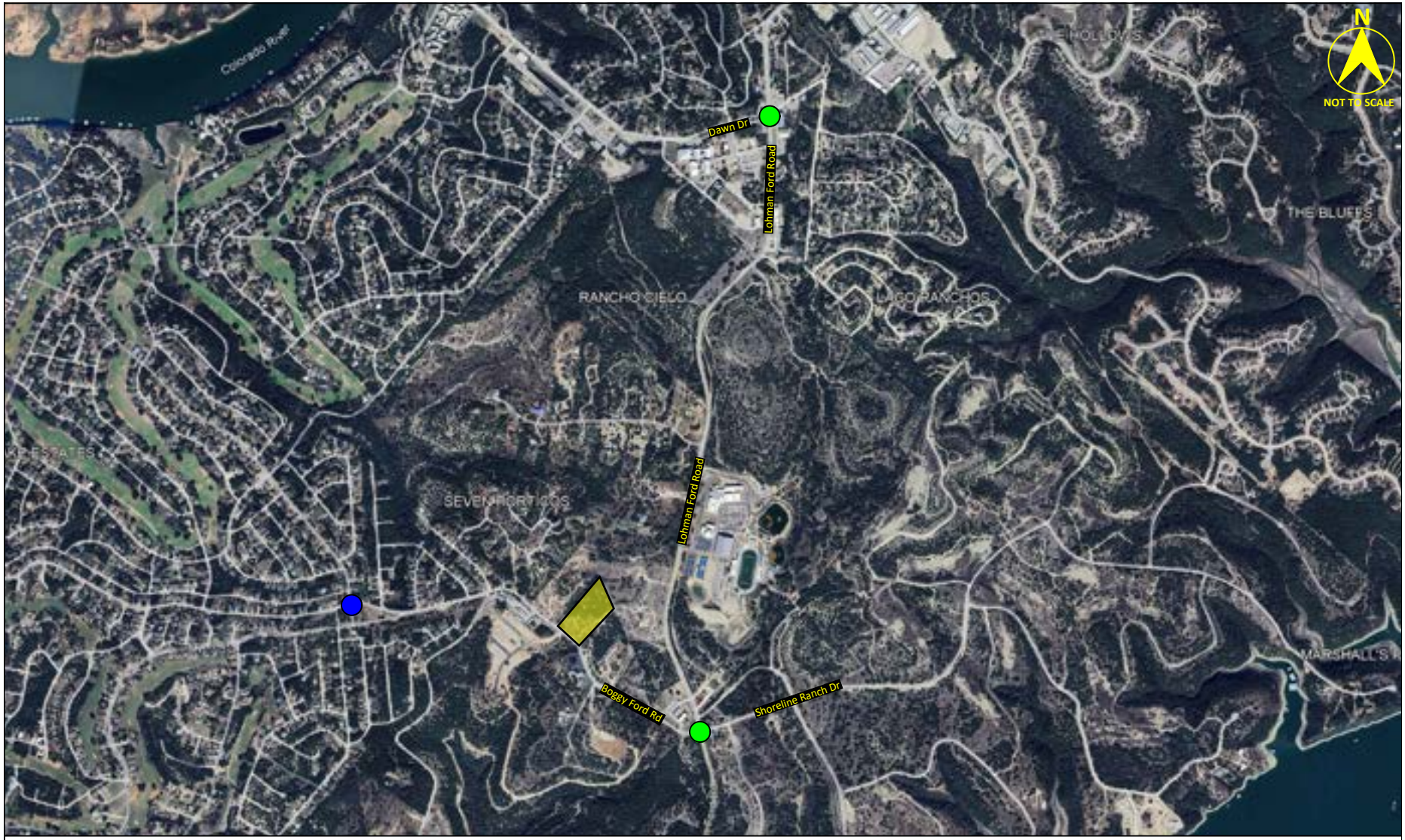

LEGEND:

- Project Site
- Study Intersection (Traffic Signal)
- Study Intersection (Stop-Controlled)

PROMET ENGINEERS
TRANSPORTATION ENGINEERING & PLANNING
TBPE Firm Registration No.: F-25044
Phone 469-640-7708 Web www.prometengineers.com
9550 Forest Lane, Suite 342, Dallas, Texas 75243

EXHIBIT:	1
TITLE:	Site Location Map
DATE:	April 20, 2025
TRAFFIC IMPACT ANALYSIS UPDATE FOR 19708 BOGGY FORD ROAD DEVELOPMENT, LAGO VISTA, TEXAS	

EXHIBIT 2. PRELIMINARY SITE PLAN

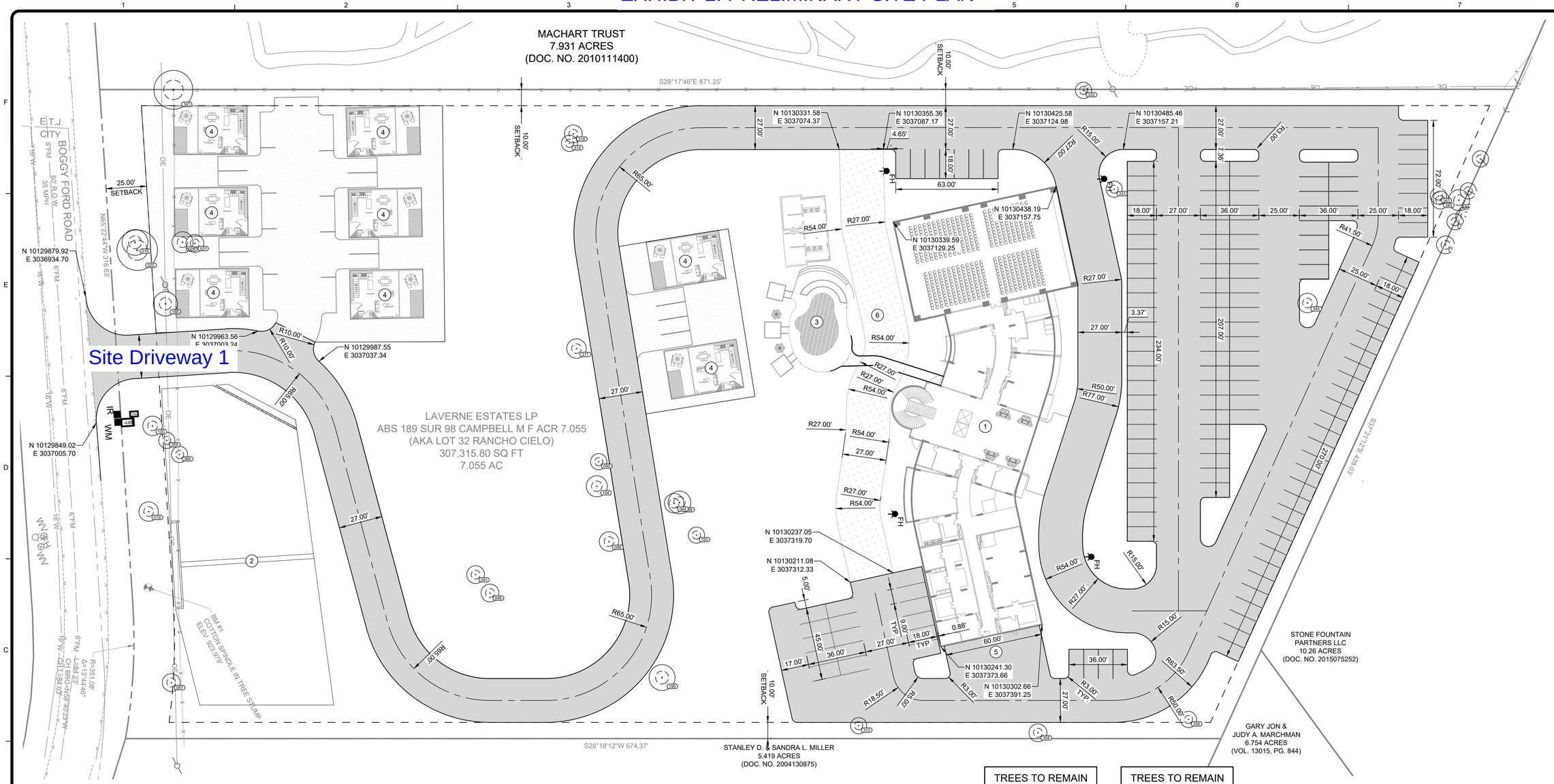

LAGO VISTA RESORT HOTEL USE/ PARKING TABLE						
Use	Quantity	Unit	Use Parking Ratio	Parking Required		Parking Provided
Hotel/ Motel	90	Rooms	1 space / Room	90		90
Event Space (Main)	6,000	sq. ft.	1space / 500 sq. ft.	12		12
Event Space (Aux)	8,000	sq. ft.	1 space / 500 sq. ft.	16		16
Restaurant (Lobby Includes Bar)	4,000	sq. ft.	1 space / 250 sq.ft	16		16
Casita	8	Rooms	1 space/ Room	8		10
			Total Required	142	Total Provided	144

0 15' 30' 60'
SCALE: 1" = 30'

LEGEND

EXISTING

- PROPERTY BOUNDARY
- PROPERTY LINE
- EASEMENT LINE
- ASPHALT LINE
- CONCRETE CURB LINE
- #FM — WASTEWATER LINE
- #W — WATER LINE
- OE — OVERHEAD POWER LINE
- XXXX — TREE TO REMAIN AND TREE ID NO.

PROPOSED

- EDGE OF ASPHALT
- FH — FIRE HYDRANT
- WM — WATER METER
- WW — WASTEWATER MANHOLE
- ASPHALT
- GRASS PAVED FIRE LANE
- PHASE II DEVELOPMENT

SITE PLAN NOTES:

1. HOTEL (F.F.E. = 993.00')
2. WATER QUALITY/DETENTION POND
3. POOL & CABANAS (REF. ARCHITECTURAL PLANS)
4. CASITAS (PHASE II)
5. SERVICE LOADING AREA
6. GRASS PAVED FIRE LANE

SITE DATA TABLE - LOT 1				
	EXISTING	PROPOSED	TOTAL	ALLOWED
TOTAL SITE AREA (SQ-FT)	307,315.8	307,315.8	307,315.8	
ZONING	TR-1	PDD		
PROPOSED USE	UNDEVELOPED	HOTEL		
NUMBER OF BUILDINGS	0	1	1	
TOTAL GROSS FLOOR AREA (SQ-FT)	0	69,300	69,300	
BUILDING COVERAGE (SQ-FT)	0	21,765	21,765	
BUILDING COVERAGE (%)	0	6.76%	6.76%	
IMPERVIOUS COVER SQ-FT)	0	114,848	114,848	
IMPERVIOUS COVER (%)	0%	37.37%	37.37%	60%
FLOOR TO AREA RATIO	N/A			
OPEN SPACE (SQ-FT)	N/A	28,880.00	28,880.00	
OPEN SPACE (%)	100	62.63	62.63	
BUILDING HEIGHT (STORIES)	0	5	5	
BUILDING HEIGHT (FEET)	0	65	65	
FOUNDATION TYPE	N/A	SLAB-ON-GRADE		
F.F.E (1ST FLR.)	0	990.00'		

TREES TO REMAIN	
TREE #	DESCRIPTION
016	16" OAK
019	12" OAK
021	11" OAK
024	13" OAK
025	25" OAK
048	11" OAK
064	12" OAK
087	11" OAK
090	10" OAK
091	11" OAK
095	14" OAK
098	14" OAK
099	12" OAK
100	12" OAK
101	11" OAK
188	15" OAK
190	16" OAK
193	10" OAK
194	13" OAK
198	12" OAK

TREES TO REMAIN	
TREE #	DESCRIPTION
199	10" OAK
300	10" OAK
312	10" OAK
317	12" OAK
318	11" OAK
319	10" OAK
331	10" OAK
332	10" OAK
340	11" OAK
341	10" OAK
342	10" OAK
343	10" OAK
344	13" OAK
345	12" OAK
356	10" OAK
358	11" OAK
359	10" OAK
360	10" OAK
361	24" CEDAR

STATE OF TEXAS
WILLIAM E. PARNELL
121598
LICENSED
PROFESSIONAL ENGINEER
11/10/25

parnell engineering
www.parnellengineeringinc.com
500 E. WHITESTONE BLVD (#1419)
CEDAR PARK, TX 78613
512-431-8411
TEXAS REGISTRATION FIRM NO. F-19566

MARK	DATE	DESCRIPTION	BY

LAVERNE DEVELOPERS
VISTA VERDE RESORT HOTEL
19708 BOGGY FORD ROAD, LAGO VISTA, TEXAS 78645
CONCEPT SITE PLAN

Project No:
Designed By K. HERNANDEZ
Drawn By: K. HERNANDEZ
Checked By: W. PARNELL

CS-101
Sheet 8 of 29
File No: 2511.01

811 Know what's below. Call before you dig.

Bar Measures 1 inch, otherwise drawing not to scale

Copyright: Parnell Engineering

11/10/2025 3:28:01 PM - J:\2511_LAVERNE DEVELOPERS\2511.01 VISTA VERDE RESORT HOTEL\CAD\SHEETFILES\CS-101 CONCEPT PLAN.DWG - KAREN HERNANDEZ

Exhibit 3. Existing Roadway Lane Geometry and Traffic Control

^North
Not To Scale

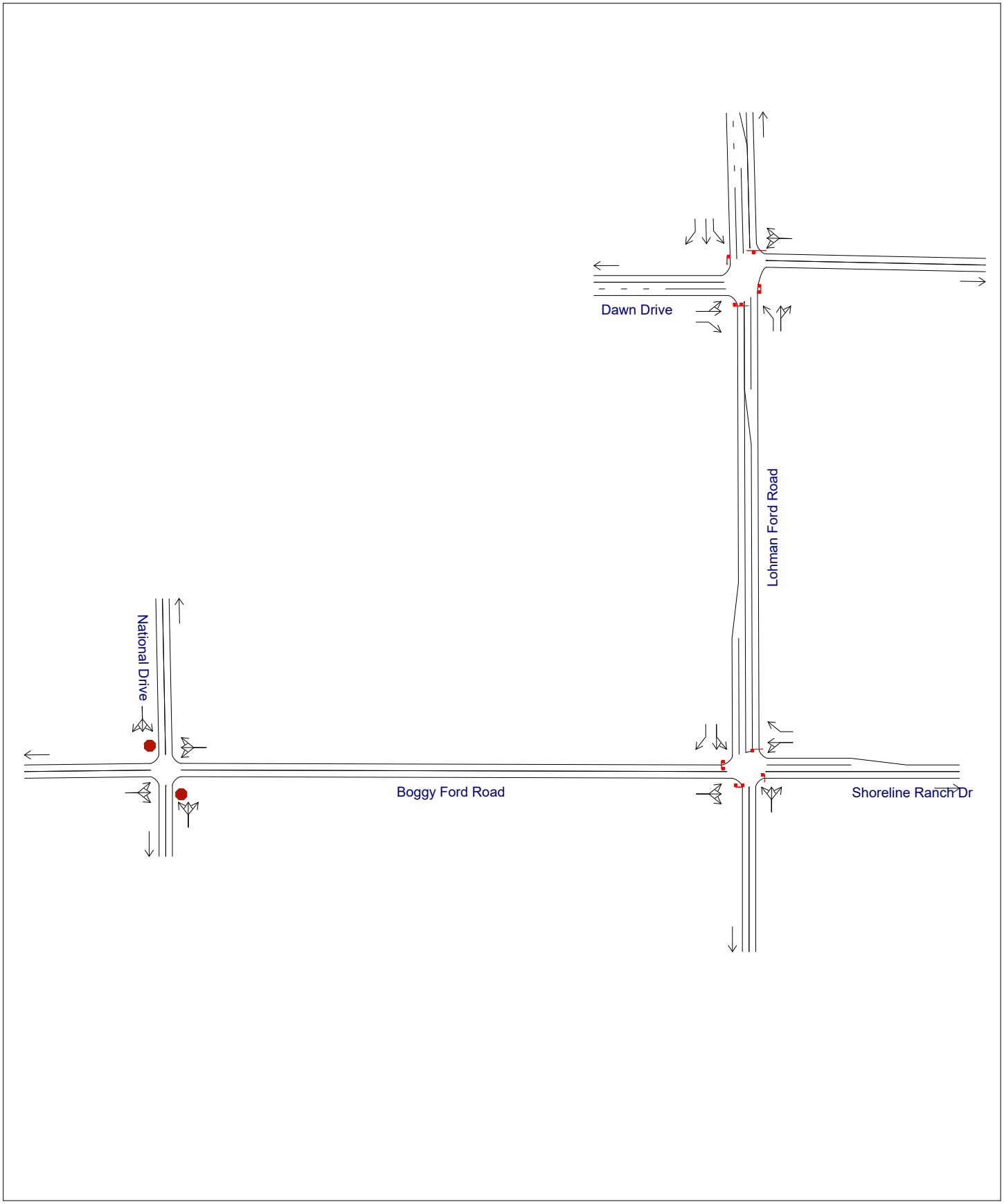

TIA for 19708 Boggy Ford Rd Development, Lago Vista, Texas

Exhibit 4. Proposed Roadway Lane Geometry and Traffic Control

^North
Not To Scale

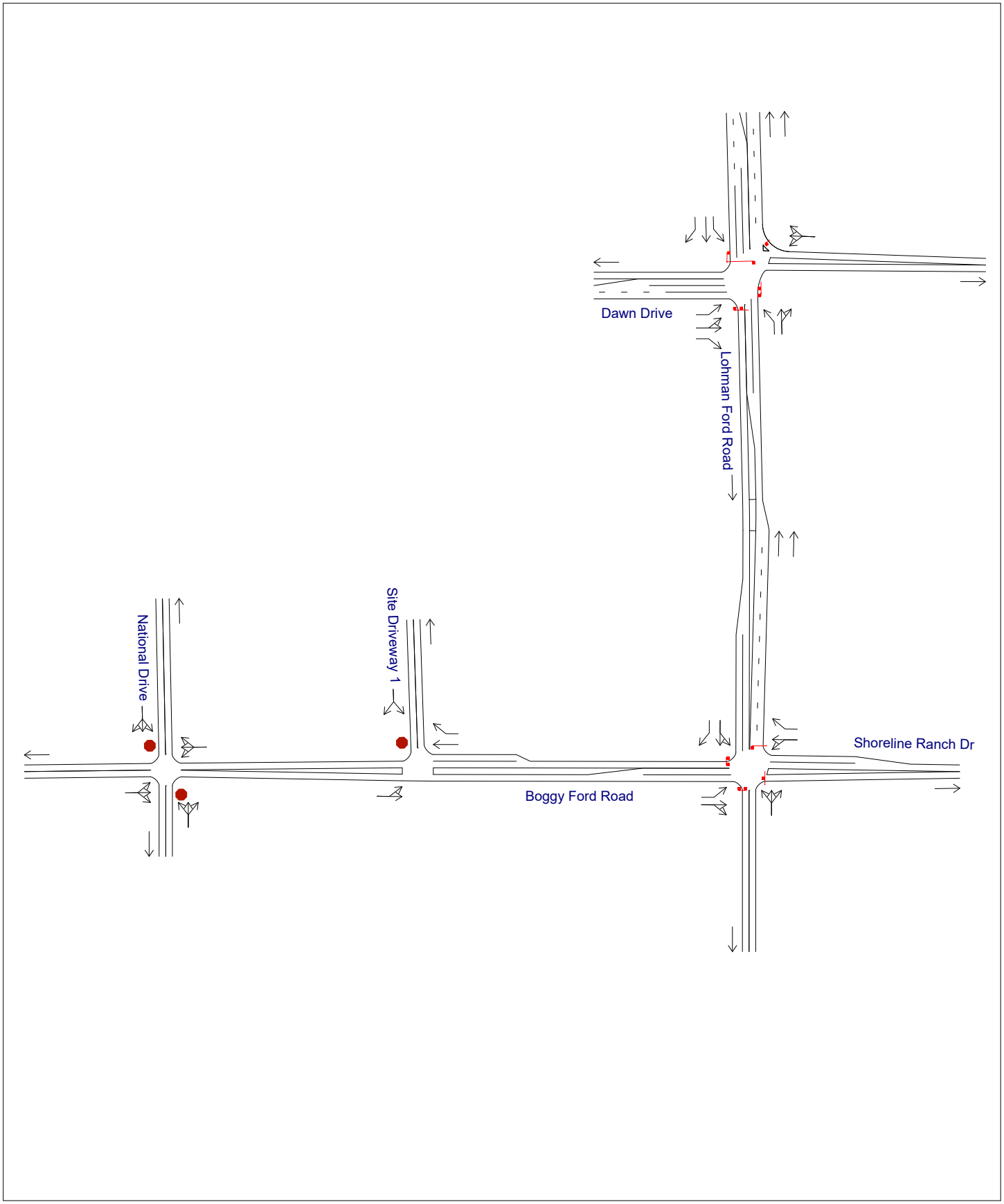

APPENDIX A. Traffic Volumes

A1. 2025 Existing AM Peak Hour Traffic Volumes

^North
Not To Scale

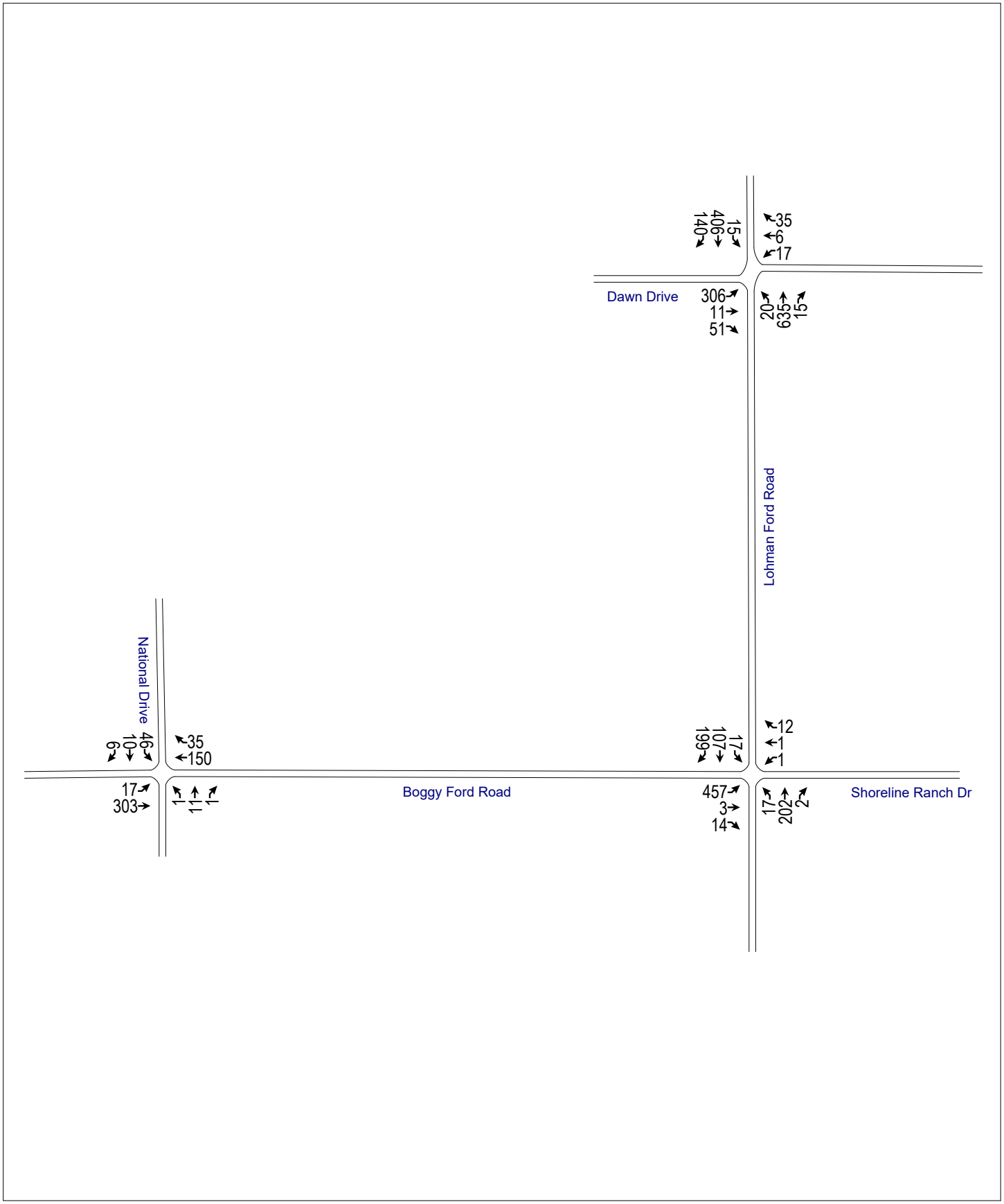

TIA for 19708 Boggy Ford Rd Development, Lago Vista, Texas

A2. 2025 Existing PM Peak Hour Traffic Volumes

^North
Not To Scale

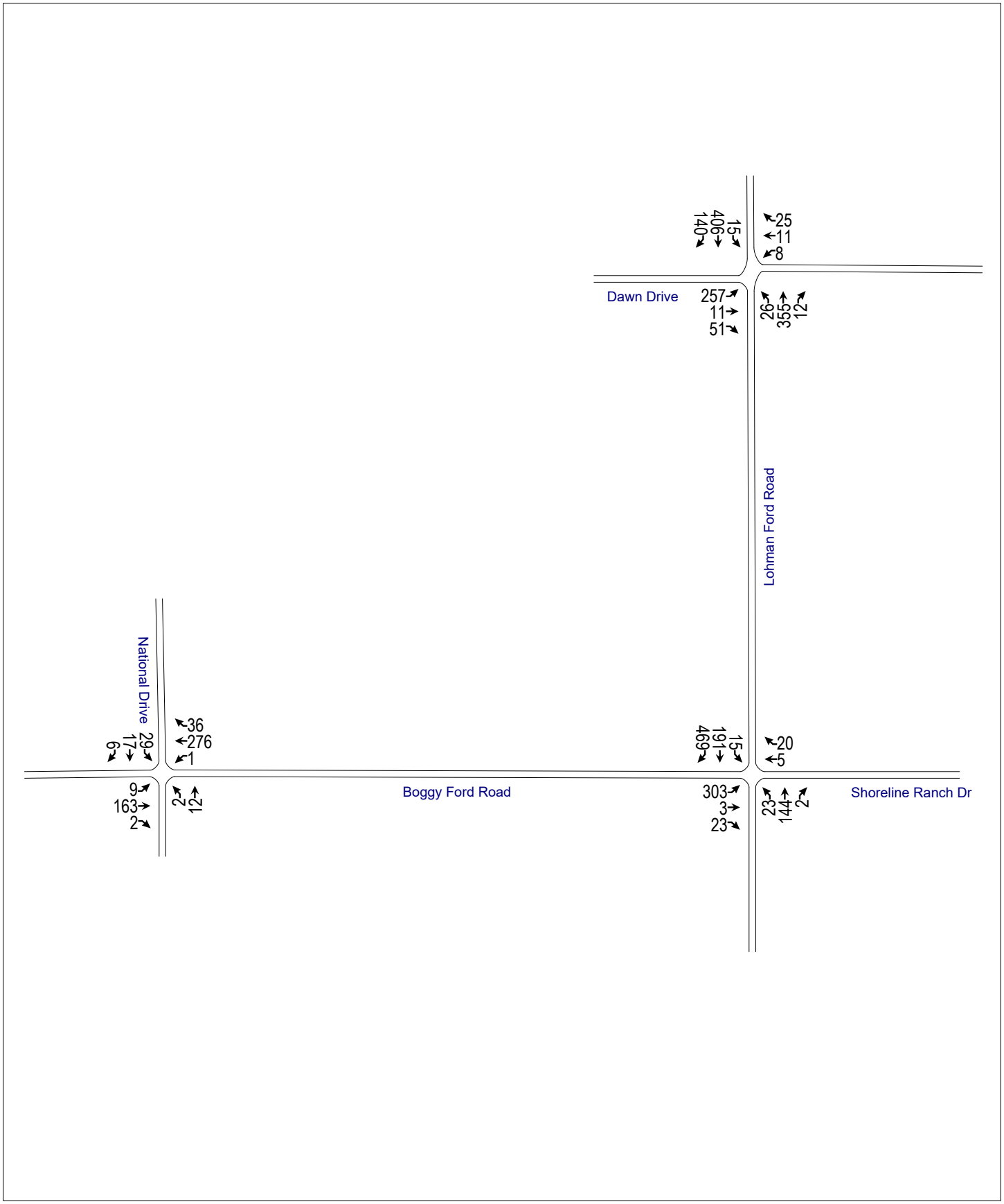

TIA for 19708 Boggy Ford Rd Development, Lago Vista, Texas

A3. 2026 No Build AM Peak Hour Traffic Volumes

^North
Not To Scale

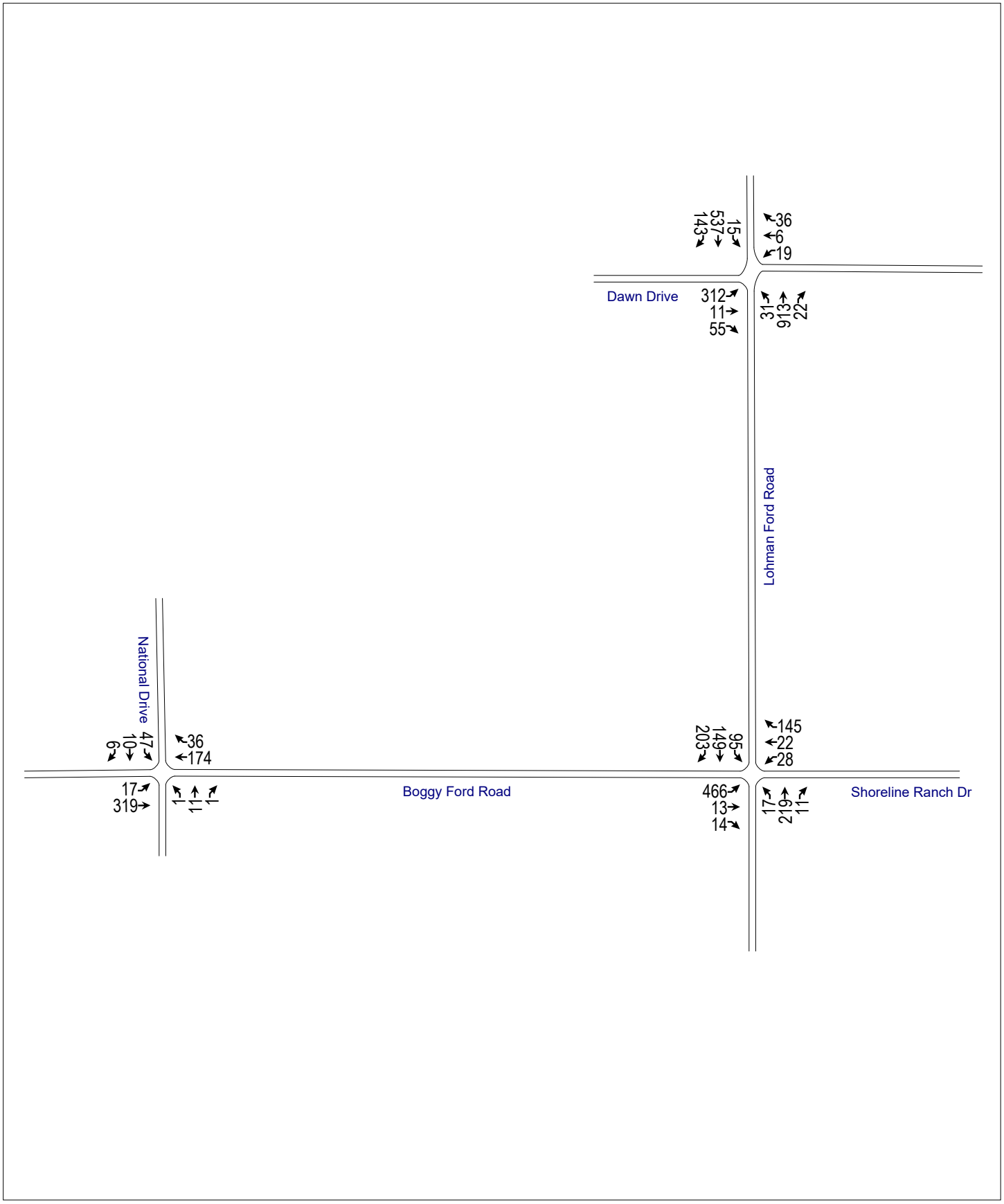

TIA for 19708 Boggy Ford Rd Development, Lago Vista, Texas

A4. 2026 No Build PM Peak Hour Traffic Volumes

^North
Not To Scale

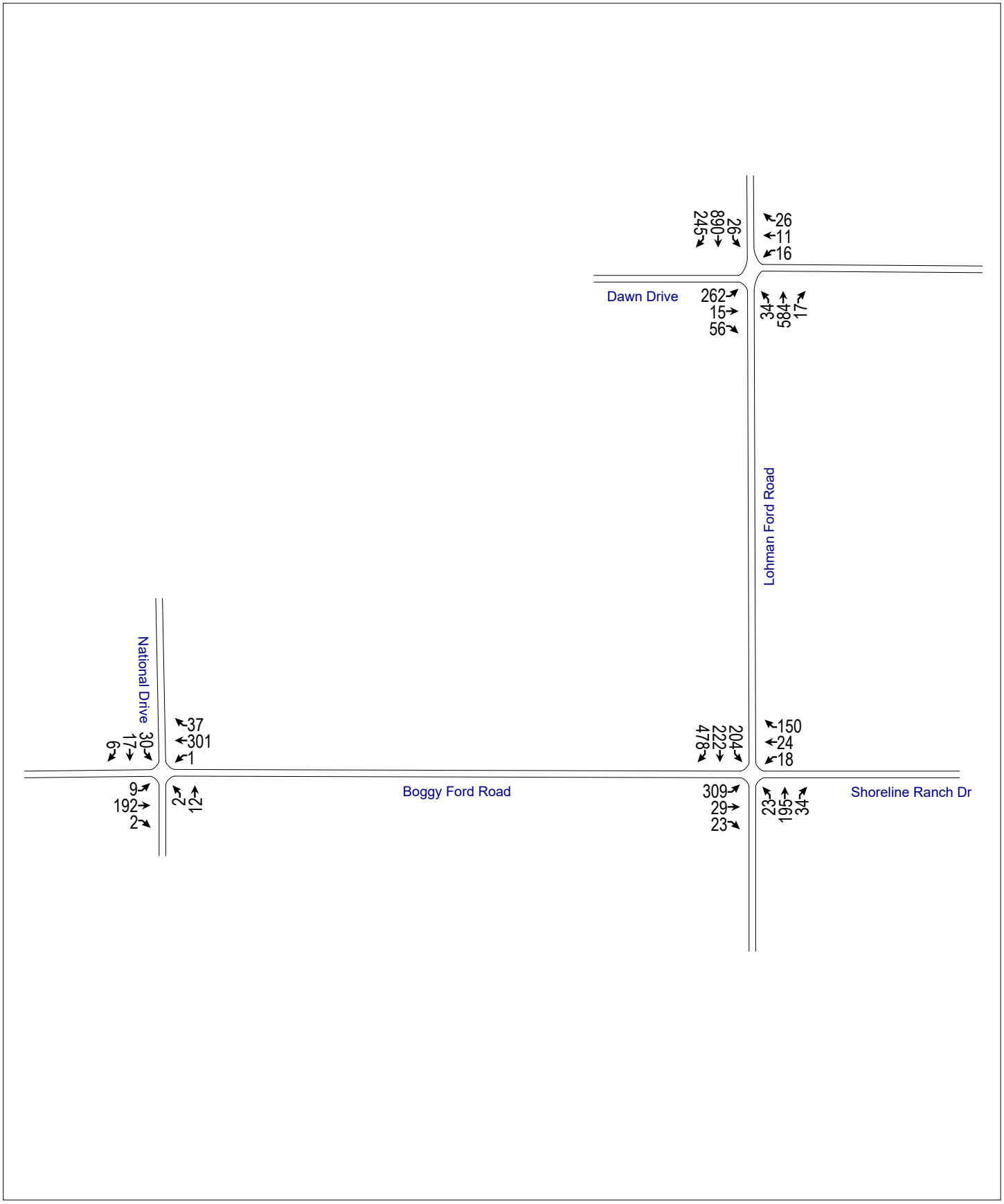

TIA for 19708 Boggy Ford Rd Development, Lago Vista, Texas

A5. Site-Generated AM Peak Hour Traffic Volumes

^North
Not To Scale

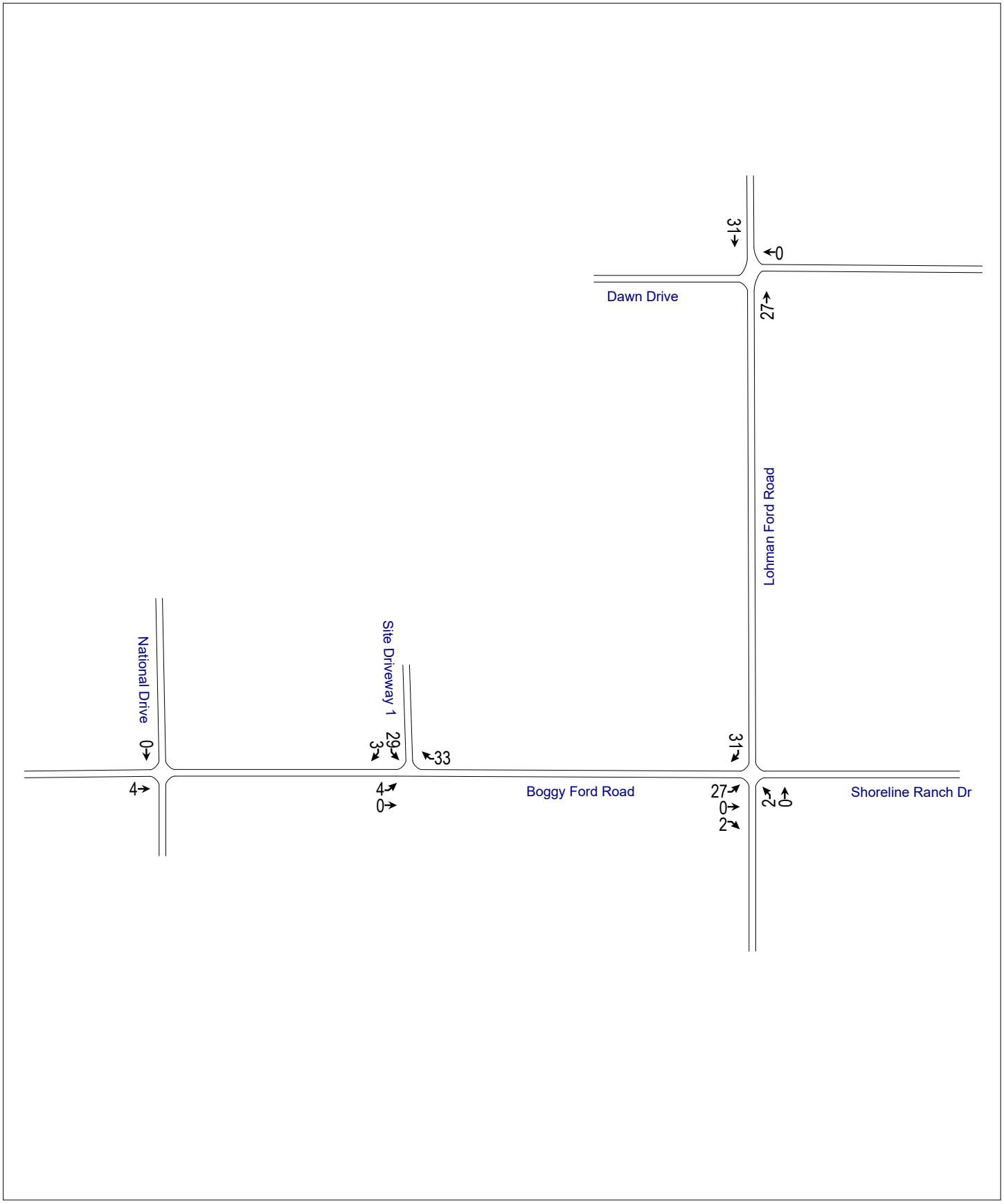

A6. Site-Generated PM Peak Hour Traffic Volumes

^North
Not To Scale

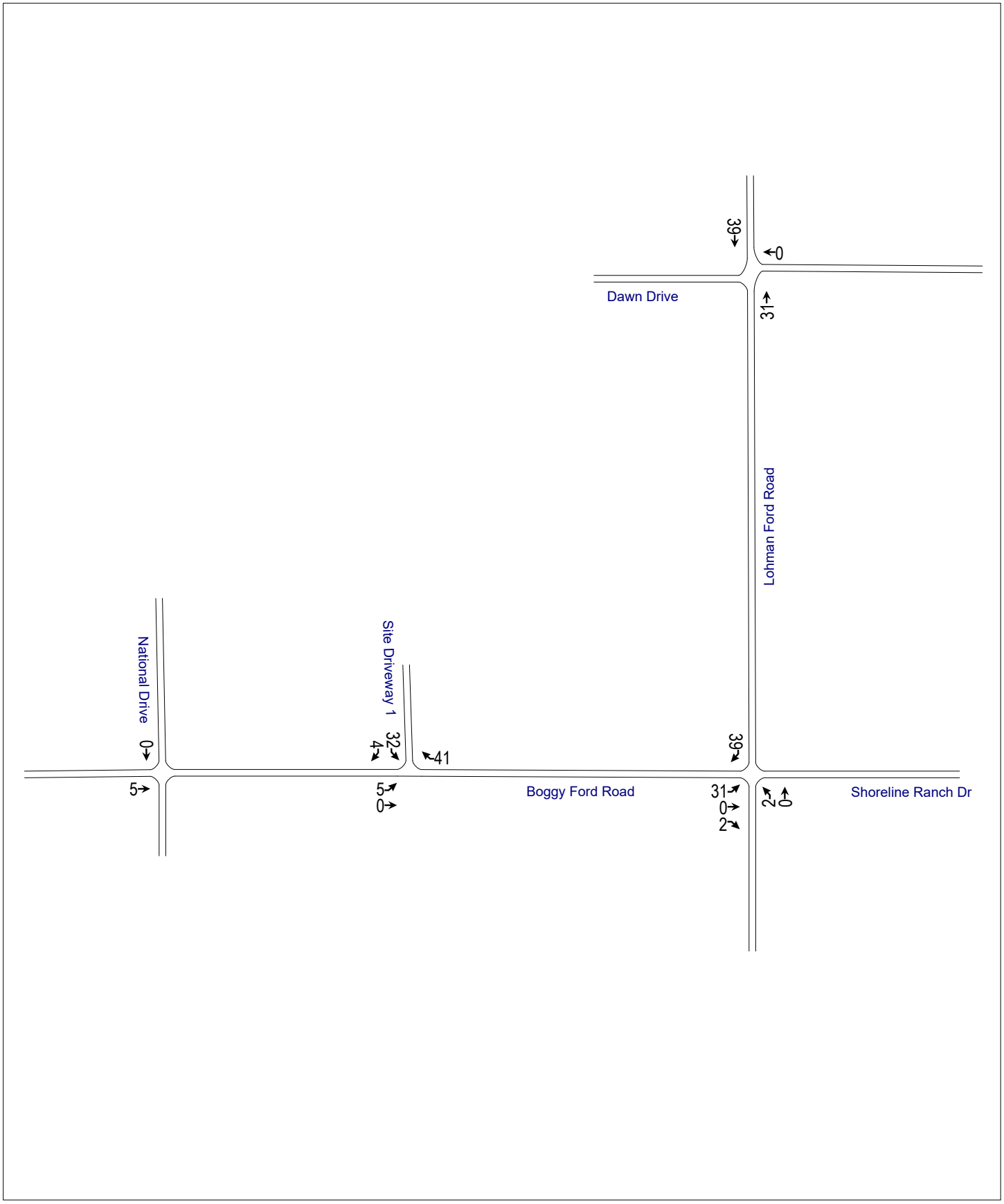

TIA for 19708 Boggy Ford Rd Development, Lago Vista, Texas

A7. Site-Generated AM Peak Hour Traffic Volumes w Hotel Conference

^North
Not To Scale

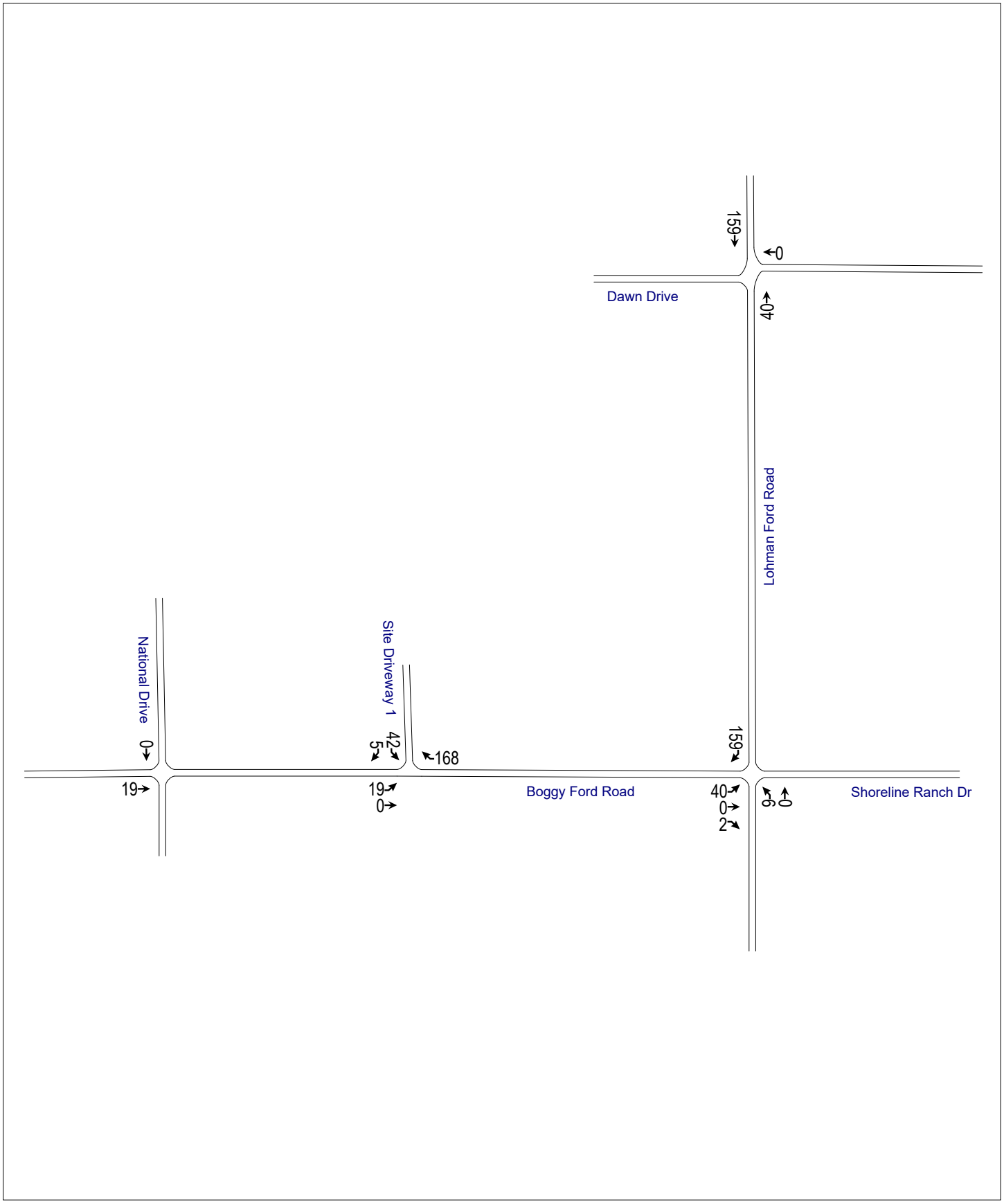

A8. Site-Generated PM Peak Hour Traffic Volumes w Hotel Conference

^North
Not To Scale

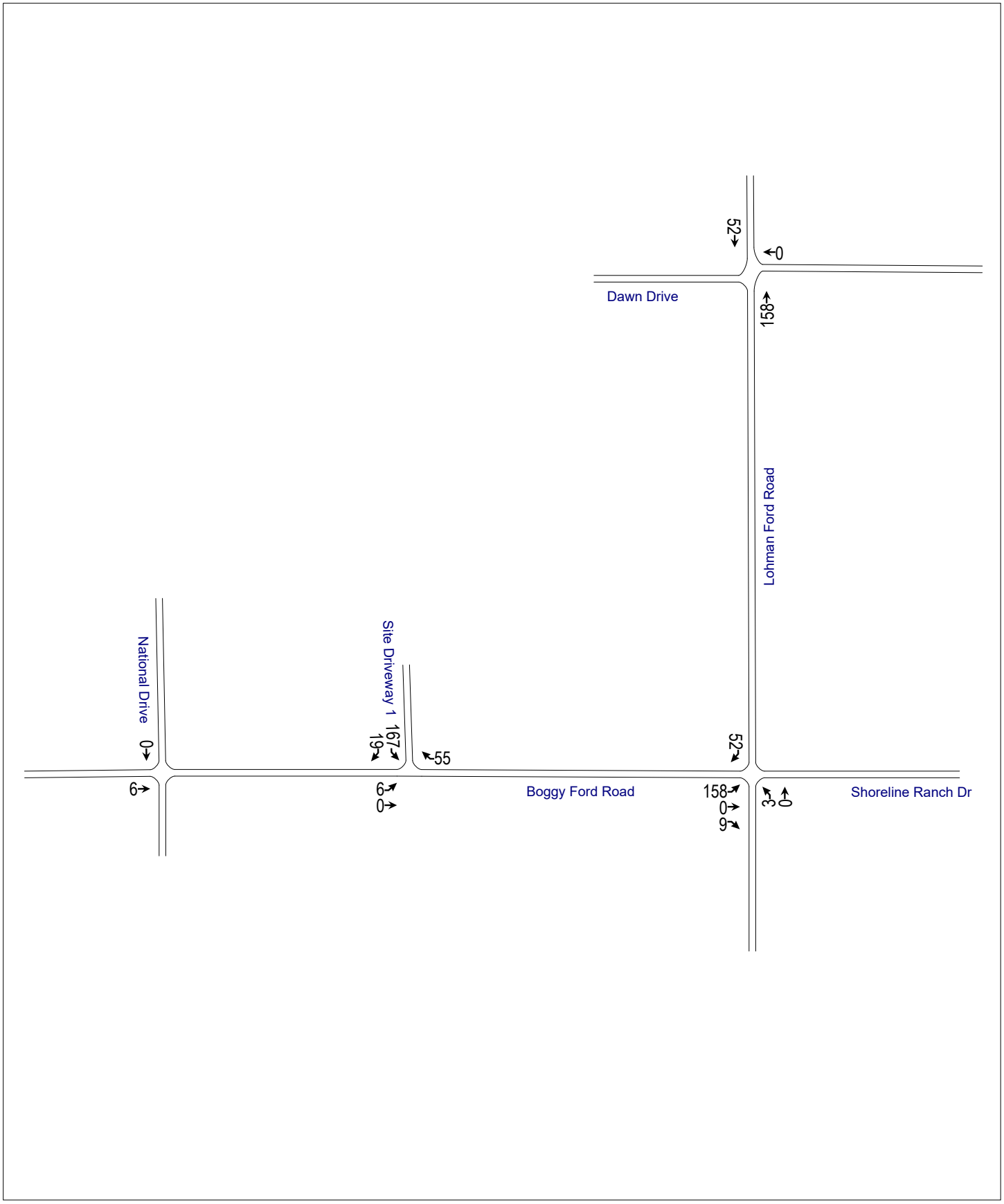

A9. 2026 Build AM Peak Hour Traffic Volumes

^North
Not To Scale

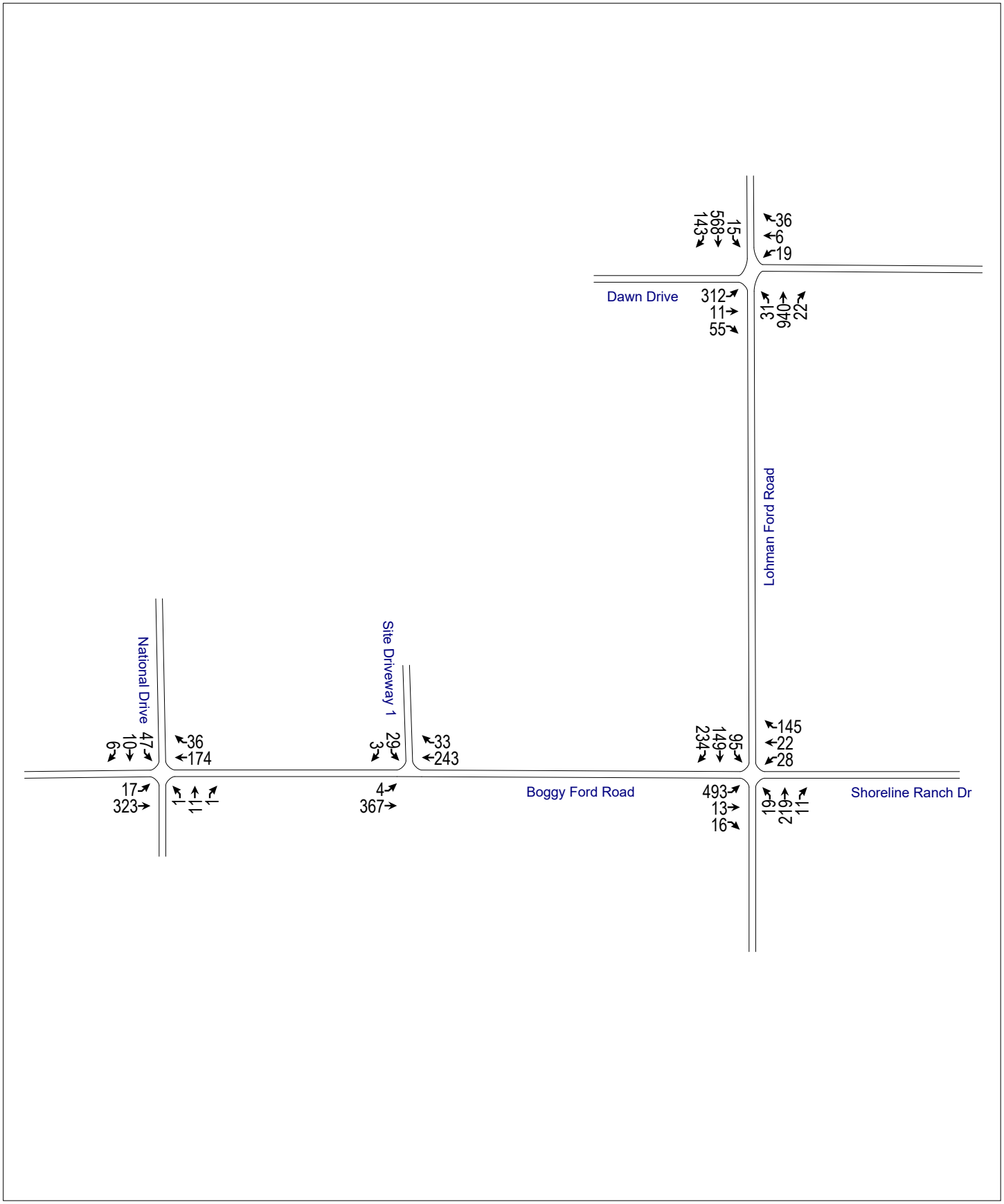

TIA for 19708 Boggy Ford Rd Development, Lago Vista, Texas

A10. 2026 Build PM Peak Hour Traffic Volumes

^North
Not To Scale

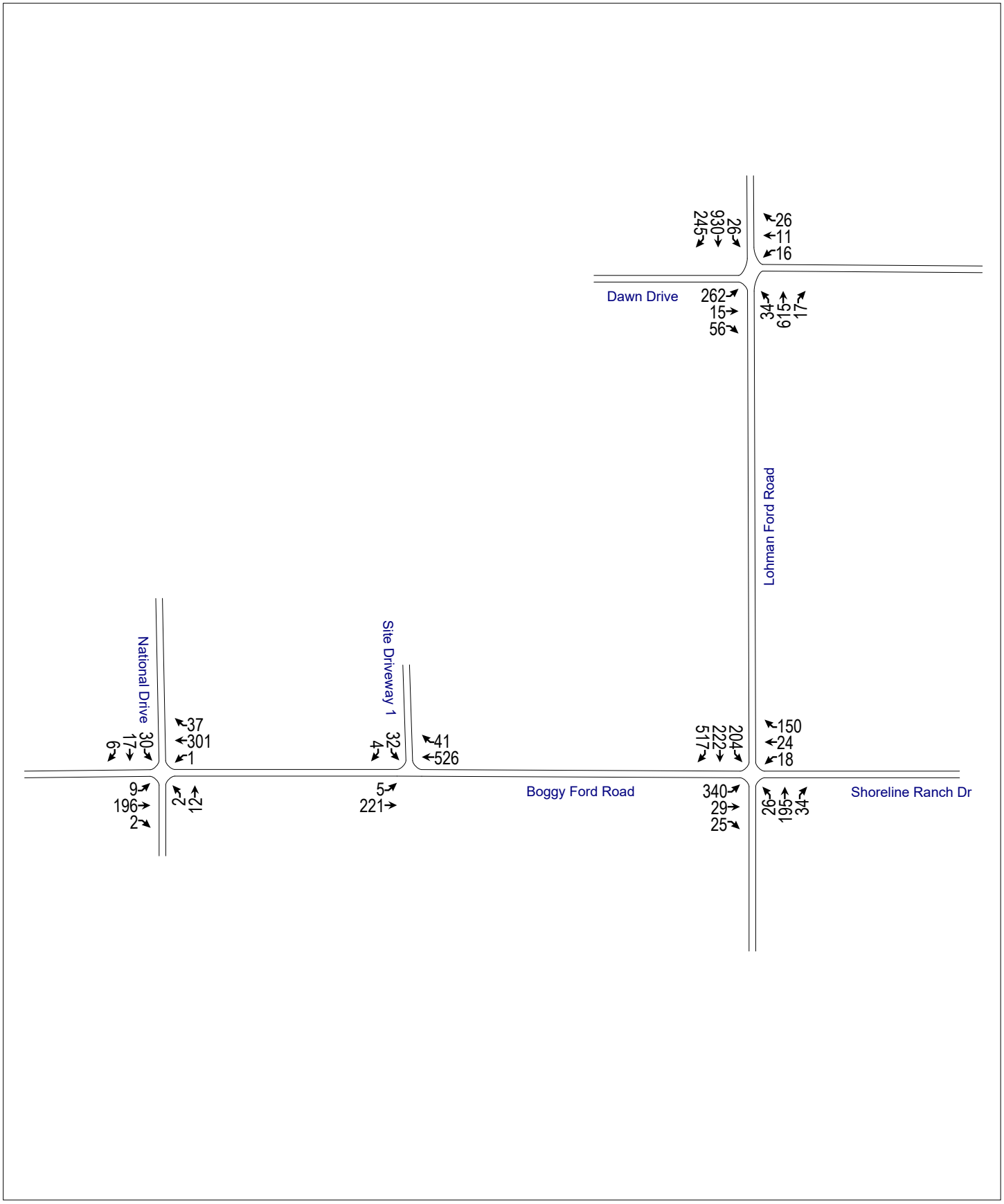

TIA for 19708 Boggy Ford Rd Development, Lago Vista, Texas

A11. 2026 Build AM Peak Hour Traffic Volumes w Hotel Conference

^North
Not To Scale

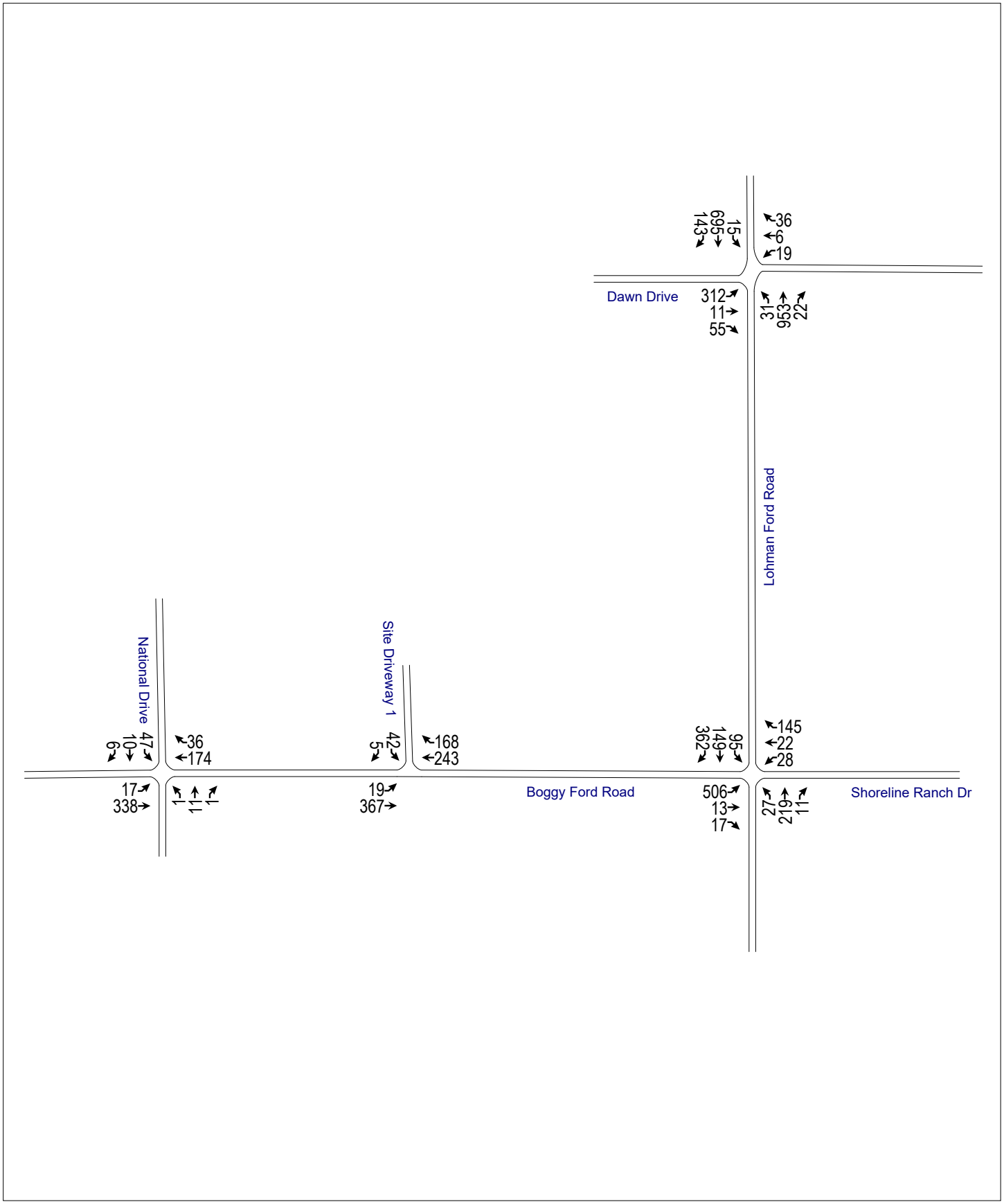

TIA for 19708 Boggy Ford Rd Development, Lago Vista, Texas

A12. 2026 Build PM Peak Hour Traffic Volumes w Hotel Conference

^North
Not To Scale

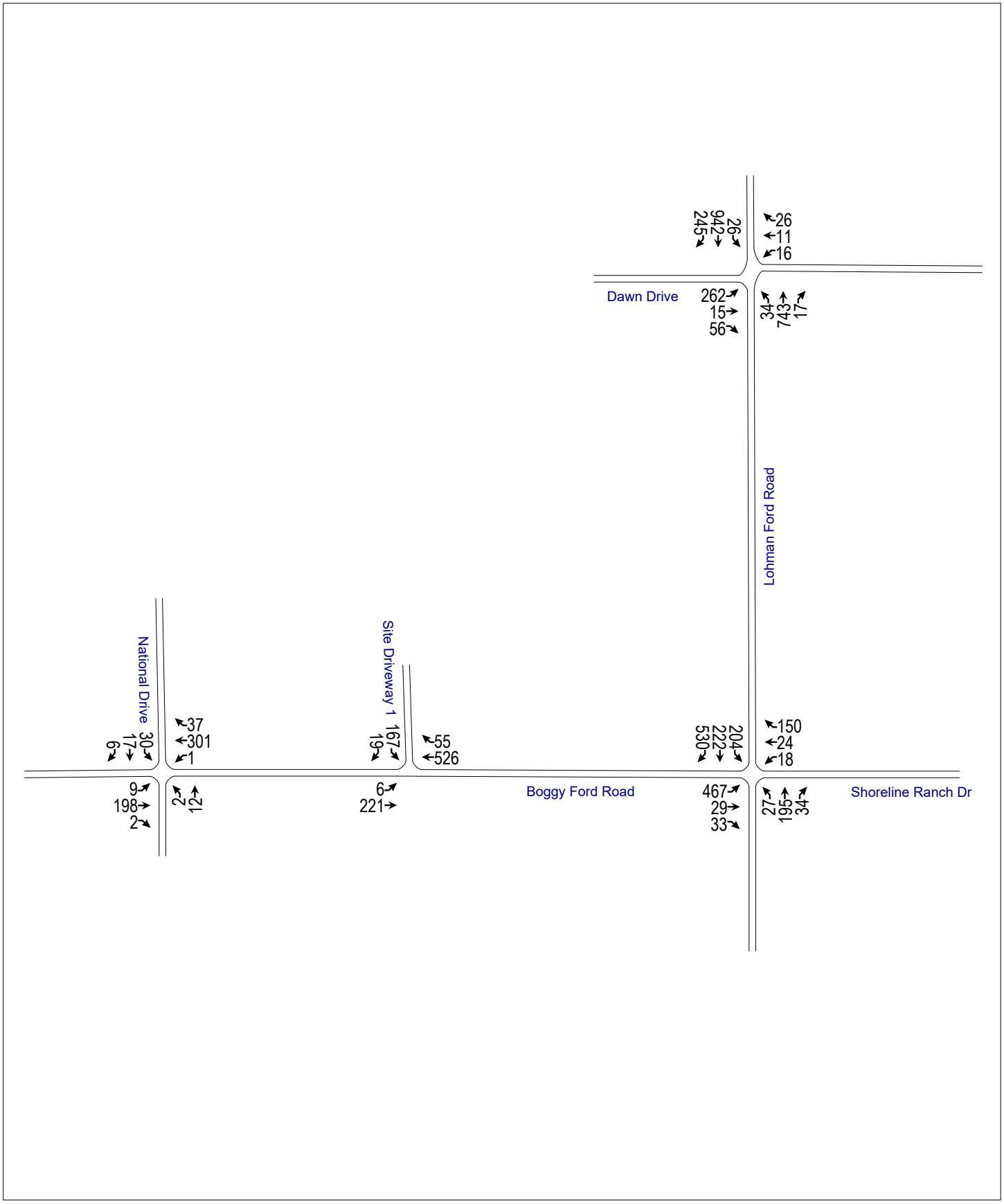

TIA for 19708 Boggy Ford Rd Development, Lago Vista, Texas

APPENDIX B. Collected Traffic Data

GRAM Traffic Counting, inc.

3751 FM 1105, Bldg. A
Georgetown, TX 78626
512-832-8650

File Name : Site 1 - Lohman Ford Rd & Dawn Dr - AM
Site Code : 1_____
Start Date : 11/15/2023
Page No : 1

Groups Printed- Vehicles - Heavy Vehicles

	Lohman Ford Rd Southbound					Westbound					Lohman Ford Rd Northbound					Dawn Dr Eastbound					
Start Time	Left	Thru	Right	U-TURN	App. Total	Left	Thru	Right	U-TURN	App. Total	Left	Thru	Right	U-TURN	App. Total	Left	Thru	Right	U-TURN	App. Total	Int. Total
07:00	1	70	29	0	100	3	4	6	0	13	4	100	2	0	106	55	0	4	0	59	278
07:15	4	94	48	0	146	3	6	6	0	15	6	144	1	0	151	67	4	9	0	80	392
07:30	5	100	60	0	165	5	2	8	0	15	6	168	3	0	177	87	6	17	0	110	467
07:45	2	86	20	0	108	4	1	6	0	11	1	153	2	0	156	91	1	11	0	103	378
Total	12	350	157	0	519	15	13	26	0	54	17	565	8	0	590	300	11	41	0	352	1515
08:00	2	89	23	0	114	5	0	8	0	13	3	131	6	0	140	62	3	5	0	70	337
08:15	5	115	32	0	152	2	3	12	0	17	9	158	3	0	170	54	1	16	0	71	410
08:30	3	118	40	0	161	1	2	5	0	8	8	165	2	0	175	48	1	11	0	60	404
08:45	5	79	24	0	108	1	1	9	0	11	8	102	1	0	111	43	1	7	0	51	281
Total	15	401	119	0	535	9	6	34	0	49	28	556	12	0	596	207	6	39	0	252	1432
Grand Total	27	751	276	0	1054	24	19	60	0	103	45	1121	20	0	1186	507	17	80	0	604	2947
Apprch %	2.6	71.3	26.2	0		23.3	18.4	58.3	0		3.8	94.5	1.7	0		83.9	2.8	13.2	0		
Total %	0.9	25.5	9.4	0	35.8	0.8	0.6	2	0	3.5	1.5	38	0.7	0	40.2	17.2	0.6	2.7	0	20.5	
Vehicles	26	719	265	0	1010	23	17	60	0	100	45	1090	20	0	1155	496	16	79	0	591	2856
% Vehicles	96.3	95.7	96	0	95.8	95.8	89.5	100	0	97.1	100	97.2	100	0	97.4	97.8	94.1	98.8	0	97.8	96.9
Heavy Vehicles	1	32	11	0	44	1	2	0	0	3	0	31	0	0	31	11	1	1	0	13	91
% Heavy Vehicles	3.7	4.3	4	0	4.2	4.2	10.5	0	0	2.9	0	2.8	0	0	2.6	2.2	5.9	1.2	0	2.2	3.1

	Lohman Ford Rd Southbound					Westbound					Lohman Ford Rd Northbound					Dawn Dr Eastbound					
Start Time	Left	Thru	Right	U-TURN	App. Total	Left	Thru	Right	U-TURN	App. Total	Left	Thru	Right	U-TURN	App. Total	Left	Thru	Right	U-TURN	App. Total	Int. Total
Peak Hour Analysis From 07:00 to 08:45 - Peak 1 of 1																					
Peak Hour for Entire Intersection Begins at 07:30																					
07:30	**5**	100	**60**	0	**165**	**5**	2	8	0	15	6	**168**	3	0	**177**	87	**6**	**17**	0	**110**	**467**
07:45	2	86	20	0	108	4	1	6	0	11	1	153	2	0	156	**91**	1	11	0	103	378
08:00	2	89	23	0	114	5	0	8	0	13	3	131	**6**	0	140	62	3	5	0	70	337
08:15	5	**115**	32	0	152	2	**3**	**12**	0	**17**	**9**	158	3	0	170	54	1	16	0	71	410
Total Volume	14	390	135	0	539	16	6	34	0	56	19	610	14	0	643	294	11	49	0	354	1592
% App. Total	2.6	72.4	25	0		28.6	10.7	60.7	0		3	94.9	2.2	0		83.1	3.1	13.8	0		
PHF	.700	.848	.563	.000	.817	.800	.500	.708	.000	.824	.528	.908	.583	.000	.908	.808	.458	.721	.000	.805	.852
Vehicles	14	379	130	0	523	15	5	34	0	54	19	591	14	0	624	290	10	48	0	348	1549
% Vehicles	100	97.2	96.3	0	97.0	93.8	83.3	100	0	96.4	100	96.9	100	0	97.0	98.6	90.9	98.0	0	98.3	97.3
Heavy Vehicles	0	11	5	0	16	1	1	0	0	2	0	19	0	0	19	4	1	1	0	6	43
% Heavy Vehicles	0	2.8	3.7	0	3.0	6.3	16.7	0	0	3.6	0	3.1	0	0	3.0	1.4	9.1	2.0	0	1.7	2.7

GRAM Traffic Counting, inc.

3751 FM 1105, Bldg. A
Georgetown, TX 78626
512-832-8650

File Name : Site 1 - Lohman Ford Rd & Dawn Dr - AM
Site Code : 1_____
Start Date : 11/15/2023
Page No : 2

	Lohman Ford Rd Southbound					Westbound					Lohman Ford Rd Northbound					Dawn Dr Eastbound					
Start Time	Left	Thru	Right	U-TURN	App. Total	Left	Thru	Right	U-TURN	App. Total	Left	Thru	Right	U-TURN	App. Total	Left	Thru	Right	U-TURN	App. Total	Int. Total
Peak Hour Analysis From 07:00 to 08:45 - Peak 1 of 1																					
Peak Hour for Each Approach Begins at:																					
	07:30					07:30					07:30					07:15					
+0 mins.	**5**	100	**60**	0	**165**	**5**	2	8	0	15	6	**168**	3	0	**177**	67	4	9	0	80	
+15 mins.	2	86	20	0	108	4	1	6	0	11	1	153	2	0	156	87	**6**	**17**	0	**110**	
+30 mins.	2	89	23	0	114	5	0	8	0	13	3	131	**6**	0	140	**91**	1	11	0	103	
+45 mins.	5	**115**	32	0	152	2	**3**	**12**	0	**17**	**9**	158	3	0	170	62	3	5	0	70	
Total Volume	14	390	135	0	539	16	6	34	0	56	19	610	14	0	643	307	14	42	0	363	
% App. Total	2.6	72.4	25	0		28.6	10.7	60.7	0		3	94.9	2.2	0		84.6	3.9	11.6	0		
PHF	.700	.848	.563	.000	.817	.800	.500	.708	.000	.824	.528	.908	.583	.000	.908	.843	.583	.618	.000	.825	
Vehicles	14	379	130	0	523	15	5	34	0	54	19	591	14	0	624	303	13	41	0	357	
% Vehicles	100	97.2	96.3	0	97	93.8	83.3	100	0	96.4	100	96.9	100	0	97	98.7	92.9	97.6	0	98.3	
Heavy Vehicles	0	11	5	0	16	1	1	0	0	2	0	19	0	0	19	4	1	1	0	6	
% Heavy Vehicles	0	2.8	3.7	0	3	6.2	16.7	0	0	3.6	0	3.1	0	0	3	1.3	7.1	2.4	0	1.7	

GRAM Traffic Counting, inc.

3751 FM 1105, Bldg. A
Georgetown, TX 78626
512-832-8650

File Name : Site 1 - Lohman Ford Rd & Dawn Dr - AM
Site Code : 1_____
Start Date : 11/15/2023
Page No : 3

Groups Printed- Vehicles

	Lohman Ford Rd Southbound					Westbound					Lohman Ford Rd Northbound					Dawn Dr Eastbound					
Start Time	Left	Thru	Right	U-TURN	App. Total	Left	Thru	Right	U-TURN	App. Total	Left	Thru	Right	U-TURN	App. Total	Left	Thru	Right	U-TURN	App. Total	Int. Total
07:00	1	63	27	0	91	3	3	6	0	12	4	99	2	0	105	51	0	4	0	55	263
07:15	3	87	45	0	135	3	6	6	0	15	6	143	1	0	150	66	4	9	0	79	379
07:30	5	98	58	0	161	4	1	8	0	13	6	163	3	0	172	85	5	17	0	107	453
07:45	2	83	20	0	105	4	1	6	0	11	1	151	2	0	154	90	1	11	0	102	372
Total	11	331	150	0	492	14	11	26	0	51	17	556	8	0	581	292	10	41	0	343	1467
08:00	2	88	22	0	112	5	0	8	0	13	3	123	6	0	132	62	3	4	0	69	326
08:15	5	110	30	0	145	2	3	12	0	17	9	154	3	0	166	53	1	16	0	70	398
08:30	3	113	40	0	156	1	2	5	0	8	8	156	2	0	166	47	1	11	0	59	389
08:45	5	77	23	0	105	1	1	9	0	11	8	101	1	0	110	42	1	7	0	50	276
Total	15	388	115	0	518	9	6	34	0	49	28	534	12	0	574	204	6	38	0	248	1389
Grand Total	26	719	265	0	1010	23	17	60	0	100	45	1090	20	0	1155	496	16	79	0	591	2856
Apprch %	2.6	71.2	26.2	0		23	17	60	0		3.9	94.4	1.7	0		83.9	2.7	13.4	0		
Total %	0.9	25.2	9.3	0	35.4	0.8	0.6	2.1	0	3.5	1.6	38.2	0.7	0	40.4	17.4	0.6	2.8	0	20.7	

	Lohman Ford Rd Southbound					Westbound					Lohman Ford Rd Northbound					Dawn Dr Eastbound					
Start Time	Left	Thru	Right	U-TURN	App. Total	Left	Thru	Right	U-TURN	App. Total	Left	Thru	Right	U-TURN	App. Total	Left	Thru	Right	U-TURN	App. Total	Int. Total
Peak Hour Analysis From 07:00 to 08:45 - Peak 1 of 1																					
Peak Hour for Entire Intersection Begins at 07:30																					
07:30	**5**	98	**58**	0	**161**	4	1	8	0	13	6	**163**	3	0	**172**	85	**5**	**17**	0	**107**	**453**
07:45	2	83	20	0	105	4	1	6	0	11	1	151	2	0	154	**90**	1	11	0	102	372
08:00	2	88	22	0	112	**5**	0	8	0	13	3	123	**6**	0	132	62	3	4	0	69	326
08:15	5	**110**	30	0	145	2	**3**	**12**	0	**17**	**9**	154	3	0	166	53	1	16	0	70	398
Total Volume	14	379	130	0	523	15	5	34	0	54	19	591	14	0	624	290	10	48	0	348	1549
% App. Total	2.7	72.5	24.9	0		27.8	9.3	63	0		3	94.7	2.2	0		83.3	2.9	13.8	0		
PHF	.700	.861	.560	.000	.812	.750	.417	.708	.000	.794	.528	.906	.583	.000	.907	.806	.500	.706	.000	.813	.855

Peak Hour Analysis From 07:00 to 08:45 - Peak 1 of 1
Peak Hour for Each Approach Begins at:

	07:30					07:30					07:30					07:15				
+0 mins.	**5**	98	**58**	0	**161**	4	1	8	0	13	6	**163**	3	0	**172**	66	4	9	0	79
+15 mins.	2	83	20	0	105	4	1	6	0	11	1	151	2	0	154	85	**5**	**17**	0	**107**
+30 mins.	2	88	22	0	112	**5**	0	8	0	13	3	123	**6**	0	132	**90**	1	11	0	102
+45 mins.	5	**110**	30	0	145	2	**3**	**12**	0	**17**	**9**	154	3	0	166	62	3	4	0	69
Total Volume	14	379	130	0	523	15	5	34	0	54	19	591	14	0	624	303	13	41	0	357
% App. Total	2.7	72.5	24.9	0		27.8	9.3	63	0		3	94.7	2.2	0		84.9	3.6	11.5	0	
PHF	.700	.861	.560	.000	.812	.750	.417	.708	.000	.794	.528	.906	.583	.000	.907	.842	.650	.603	.000	.834

GRAM Traffic Counting, inc.

3751 FM 1105, Bldg. A
Georgetown, TX 78626
512-832-8650

File Name : Site 1 - Lohman Ford Rd & Dawn Dr - AM
Site Code : 1_____
Start Date : 11/15/2023
Page No : 4

Groups Printed- Heavy Vehicles

	Lohman Ford Rd Southbound					Westbound					Lohman Ford Rd Northbound					Dawn Dr Eastbound					
Start Time	Left	Thru	Right	U-TURN	App. Total	Left	Thru	Right	U-TURN	App. Total	Left	Thru	Right	U-TURN	App. Total	Left	Thru	Right	U-TURN	App. Total	Int. Total
07:00	0	7	2	0	9	0	1	0	0	1	0	1	0	0	1	4	0	0	0	4	15
07:15	1	7	3	0	11	0	0	0	0	0	0	1	0	0	1	1	0	0	0	1	13
07:30	0	2	2	0	4	1	1	0	0	2	0	5	0	0	5	2	1	0	0	3	14
07:45	0	3	0	0	3	0	0	0	0	0	0	2	0	0	2	1	0	0	0	1	6
Total	1	19	7	0	27	1	2	0	0	3	0	9	0	0	9	8	1	0	0	9	48
08:00	0	1	1	0	2	0	0	0	0	0	0	8	0	0	8	0	0	1	0	1	11
08:15	0	5	2	0	7	0	0	0	0	0	0	4	0	0	4	1	0	0	0	1	12
08:30	0	5	0	0	5	0	0	0	0	0	0	9	0	0	9	1	0	0	0	1	15
08:45	0	2	1	0	3	0	0	0	0	0	0	1	0	0	1	1	0	0	0	1	5
Total	0	13	4	0	17	0	0	0	0	0	0	22	0	0	22	3	0	1	0	4	43
Grand Total	1	32	11	0	44	1	2	0	0	3	0	31	0	0	31	11	1	1	0	13	91
Apprch %	2.3	72.7	25	0		33.3	66.7	0	0		0	100	0	0		84.6	7.7	7.7	0		
Total %	1.1	35.2	12.1	0	48.4	1.1	2.2	0	0	3.3	0	34.1	0	0	34.1	12.1	1.1	1.1	0	14.3	

	Lohman Ford Rd Southbound					Westbound					Lohman Ford Rd Northbound					Dawn Dr Eastbound					
Start Time	Left	Thru	Right	U-TURN	App. Total	Left	Thru	Right	U-TURN	App. Total	Left	Thru	Right	U-TURN	App. Total	Left	Thru	Right	U-TURN	App. Total	Int. Total
Peak Hour Analysis From 07:00 to 08:45 - Peak 1 of 1																					
Peak Hour for Entire Intersection Begins at 07:00																					
07:00	0	**7**	2	0	9	0	**1**	0	0	1	0	1	0	0	1	**4**	0	0	0	**4**	**15**
07:15	**1**	7	**3**	0	**11**	0	0	0	0	0	0	1	0	0	1	1	0	0	0	1	13
07:30	0	2	2	0	4	**1**	1	0	0	**2**	0	**5**	0	0	**5**	2	**1**	0	0	3	14
07:45	0	3	0	0	3	0	0	0	0	0	0	2	0	0	2	1	0	0	0	1	6
Total Volume	1	19	7	0	27	1	2	0	0	3	0	9	0	0	9	8	1	0	0	9	48
% App. Total	3.7	70.4	25.9	0		33.3	66.7	0	0		0	100	0	0		88.9	11.1	0	0		
PHF	.250	.679	.583	.000	.614	.250	.500	.000	.000	.375	.000	.450	.000	.000	.450	.500	.250	.000	.000	.563	.800

Peak Hour Analysis From 07:00 to 08:45 - Peak 1 of 1
Peak Hour for Each Approach Begins at:

	07:00					07:00					07:45					07:00				
+0 mins.	0	**7**	2	0	9	0	**1**	0	0	1	0	2	0	0	2	**4**	0	0	0	**4**
+15 mins.	**1**	7	**3**	0	**11**	0	0	0	0	0	0	8	0	0	8	1	0	0	0	1
+30 mins.	0	2	2	0	4	**1**	1	0	0	**2**	0	4	0	0	4	2	**1**	0	0	3
+45 mins.	0	3	0	0	3	0	0	0	0	0	0	**9**	0	0	**9**	1	0	0	0	1
Total Volume	1	19	7	0	27	1	2	0	0	3	0	23	0	0	23	8	1	0	0	9
% App. Total	3.7	70.4	25.9	0		33.3	66.7	0	0		0	100	0	0		88.9	11.1	0	0	
PHF	.250	.679	.583	.000	.614	.250	.500	.000	.000	.375	.000	.639	.000	.000	.639	.500	.250	.000	.000	.563

GRAM Traffic Counting, inc.

3751 FM 1105, Bldg. A
Georgetown, TX 78626
512-832-8650

File Name : Site 1 - Lohman Ford Rd & Dawn Dr - AM
Site Code : 1_____
Start Date : 11/15/2023
Page No : 5

Groups Printed- Pedestrians

	Lohman Ford Rd Southbound					Westbound					Lohman Ford Rd Northbound					Dawn Dr Eastbound					
Start Time	Left	Thru	Right	U-TURN	App. Total	Left	Thru	Right	U-TURN	App. Total	Left	Thru	Right	U-TURN	App. Total	Left	Thru	Right	U-TURN	App. Total	Int. Total
07:00	0	0	0	0	0	0	0	0	0	0	0	0	0	0	0	0	0	0	0	0	0
07:15	0	0	0	0	0	0	0	0	0	0	0	0	0	0	0	0	0	0	0	0	0
07:30	0	0	0	0	0	0	0	0	0	0	0	0	0	0	0	0	0	0	0	0	0
07:45	0	0	0	0	0	0	0	0	0	0	0	0	0	0	0	0	0	0	0	0	0
Total	0	0	0	0	0	0	0	0	0	0	0	0	0	0	0	0	0	0	0	0	0
08:00	0	0	0	0	0	0	0	0	0	0	0	0	0	0	0	0	0	0	0	0	0
08:15	0	0	0	0	0	0	0	0	0	0	0	0	0	0	0	0	0	0	0	0	0
08:30	0	0	0	0	0	0	0	0	0	0	0	0	0	0	0	0	0	0	0	0	0
08:45	0	0	0	0	0	0	0	0	0	0	0	0	0	0	0	0	0	0	0	0	0
Total	0	0	0	0	0	0	0	0	0	0	0	0	0	0	0	0	0	0	0	0	0
Grand Total	0	0	0	0	0	0	0	0	0	0	0	0	0	0	0	0	0	0	0	0	0
Apprch %	0	0	0	0		0	0	0	0		0	0	0	0		0	0	0	0		
Total %																					

	Lohman Ford Rd Southbound					Westbound					Lohman Ford Rd Northbound					Dawn Dr Eastbound					
Start Time	Left	Thru	Right	U-TURN	App. Total	Left	Thru	Right	U-TURN	App. Total	Left	Thru	Right	U-TURN	App. Total	Left	Thru	Right	U-TURN	App. Total	Int. Total
Peak Hour Analysis From 07:00 to 08:45 - Peak 1 of 1																					
Peak Hour for Entire Intersection Begins at 07:00																					
07:00	0	0	0	0	0	0	0	0	0	0	0	0	0	0	0	0	0	0	0	0	0
07:15	0	0	0	0	0	0	0	0	0	0	0	0	0	0	0	0	0	0	0	0	0
07:30	0	0	0	0	0	0	0	0	0	0	0	0	0	0	0	0	0	0	0	0	0
07:45	0	0	0	0	0	0	0	0	0	0	0	0	0	0	0	0	0	0	0	0	0
Total Volume	0	0	0	0	0	0	0	0	0	0	0	0	0	0	0	0	0	0	0	0	0
% App. Total	0	0	0	0		0	0	0	0		0	0	0	0		0	0	0	0		
PHF	.000	.000	.000	.000	.000	.000	.000	.000	.000	.000	.000	.000	.000	.000	.000	.000	.000	.000	.000	.000	.000

Peak Hour Analysis From 07:00 to 08:45 - Peak 1 of 1
Peak Hour for Each Approach Begins at:

	07:00					07:00					07:00					07:00				
+0 mins.	0	0	0	0	0	0	0	0	0	0	0	0	0	0	0	0	0	0	0	0
+15 mins.	0	0	0	0	0	0	0	0	0	0	0	0	0	0	0	0	0	0	0	0
+30 mins.	0	0	0	0	0	0	0	0	0	0	0	0	0	0	0	0	0	0	0	0
+45 mins.	0	0	0	0	0	0	0	0	0	0	0	0	0	0	0	0	0	0	0	0
Total Volume	0	0	0	0	0	0	0	0	0	0	0	0	0	0	0	0	0	0	0	0
% App. Total	0	0	0	0		0	0	0	0		0	0	0	0		0	0	0	0	
PHF	.000	.000	.000	.000	.000	.000	.000	.000	.000	.000	.000	.000	.000	.000	.000	.000	.000	.000	.000	.000

GRAM Traffic Counting, inc.

3751 FM 1105, Bldg. A
Georgetown, TX 78626
512-832-8650

File Name : Site 1 - Lohman Ford Rd & Dawn Dr - PM
Site Code : 1_____
Start Date : 11/15/2023
Page No : 1

Groups Printed- Vehicles - Heavy Vehicles

	Lohman Ford Rd Southbound					Driveway Westbound					Lohman Ford Rd Northbound					Dawn Dr Eastbound					
Start Time	Left	Thru	Right	U-TURN	App. Total	Left	Thru	Right	U-TURN	App. Total	Left	Thru	Right	U-TURN	App. Total	Left	Thru	Right	U-TURN	App. Total	Int. Total
14:00	5	111	53	0	169	0	1	4	0	5	5	96	1	0	102	55	1	4	0	60	336
14:15	4	95	43	0	142	0	2	5	0	7	3	83	1	0	87	44	1	9	0	54	290
14:30	4	110	41	0	155	2	2	5	0	9	4	75	1	0	80	32	0	4	0	36	280
14:45	3	107	43	0	153	1	3	4	0	8	7	91	1	0	99	36	0	4	0	40	300
Total	16	423	180	0	619	3	8	18	0	29	19	345	4	0	368	167	2	21	0	190	1206
15:00	5	104	46	0	155	1	3	7	0	11	7	72	2	0	81	41	3	4	0	48	295
15:15	7	146	78	0	231	2	3	5	0	10	3	103	4	0	110	80	3	12	0	95	446
15:30	7	136	51	0	194	2	2	7	0	11	9	85	4	0	98	80	5	16	0	101	404
15:45	5	127	56	0	188	3	3	5	0	11	6	81	2	0	89	46	3	9	0	58	346
Total	24	513	231	0	768	8	11	24	0	43	25	341	12	0	378	247	14	41	0	302	1491
16:00	9	158	62	0	229	2	2	8	0	12	4	124	2	0	130	55	4	6	0	65	436
16:15	6	171	54	0	231	4	1	9	0	14	17	178	1	0	196	41	1	4	0	46	487
16:30	7	170	77	0	254	2	2	4	0	8	13	152	2	0	167	60	0	9	0	69	498
16:45	9	162	68	0	239	0	1	8	0	9	6	101	3	0	110	38	2	7	0	47	405
Total	31	661	261	0	953	8	6	29	0	43	40	555	8	0	603	194	7	26	0	227	1826
17:00	10	139	88	0	237	2	2	8	0	12	10	116	2	0	128	52	2	9	0	63	440
17:15	11	154	61	0	226	3	2	7	0	12	6	99	3	0	108	50	0	13	0	63	409
17:30	13	147	57	0	217	3	2	8	0	13	3	104	2	0	109	40	2	8	0	50	389
17:45	11	159	54	0	224	2	4	5	0	11	4	89	1	0	94	45	3	6	0	54	383
Total	45	599	260	0	904	10	10	28	0	48	23	408	8	0	439	187	7	36	0	230	1621
18:00	6	144	64	0	214	0	1	4	0	5	1	107	2	0	110	41	3	7	0	51	380
18:15	6	117	49	0	172	0	3	4	0	7	2	80	0	0	82	27	1	5	0	33	294
18:30	7	139	58	0	204	1	1	2	0	4	4	61	0	0	65	27	0	3	0	30	303
18:45	5	115	43	0	163	1	0	1	0	2	9	52	0	0	61	27	0	6	0	33	259
Total	24	515	214	0	753	2	5	11	0	18	16	300	2	0	318	122	4	21	0	147	1236
Grand Total	140	2711	1146	0	3997	31	40	110	0	181	123	1949	34	0	2106	917	34	145	0	1096	7380
Apprch %	3.5	67.8	28.7	0		17.1	22.1	60.8	0		5.8	92.5	1.6	0		83.7	3.1	13.2	0		
Total %	1.9	36.7	15.5	0	54.2	0.4	0.5	1.5	0	2.5	1.7	26.4	0.5	0	28.5	12.4	0.5	2	0	14.9	
Vehicles	137	2686	1128	0	3951	30	39	109	0	178	123	1921	34	0	2078	905	33	139	0	1077	7284
% Vehicles	97.9	99.1	98.4	0	98.8	96.8	97.5	99.1	0	98.3	100	98.6	100	0	98.7	98.7	97.1	95.9	0	98.3	98.7
Heavy Vehicles	3	25	18	0	46	1	1	1	0	3	0	28	0	0	28	12	1	6	0	19	96
% Heavy Vehicles	2.1	0.9	1.6	0	1.2	3.2	2.5	0.9	0	1.7	0	1.4	0	0	1.3	1.3	2.9	4.1	0	1.7	1.3

GRAM Traffic Counting, inc.

3751 FM 1105, Bldg. A
Georgetown, TX 78626
512-832-8650

File Name : Site 1 - Lohman Ford Rd & Dawn Dr - PM
Site Code : 1_____
Start Date : 11/15/2023
Page No : 2

	Lohman Ford Rd Southbound					Driveway Westbound					Lohman Ford Rd Northbound					Dawn Dr Eastbound					
Start Time	Left	Thru	Right	U-TURN	App. Total	Left	Thru	Right	U-TURN	App. Total	Left	Thru	Right	U-TURN	App. Total	Left	Thru	Right	U-TURN	App. Total	Int. Total
Peak Hour Analysis From 14:00 to 15:45 - Peak 1 of 1																					
Peak Hour for Entire Intersection Begins at 15:00																					
15:00	5	104	46	0	155	1	**3**	**7**	0	**11**	7	72	2	0	81	41	3	4	0	48	295
15:15	**7**	**146**	**78**	0	**231**	2	3	5	0	10	3	**103**	**4**	0	**110**	**80**	3	12	0	95	**446**
15:30	7	136	51	0	194	2	2	7	0	11	**9**	85	4	0	98	80	**5**	**16**	0	**101**	404
15:45	5	127	56	0	188	**3**	3	5	0	11	6	81	2	0	89	46	3	9	0	58	346
Total Volume	24	513	231	0	768	8	11	24	0	43	25	341	12	0	378	247	14	41	0	302	1491
% App. Total	3.1	66.8	30.1	0		18.6	25.6	55.8	0		6.6	90.2	3.2	0		81.8	4.6	13.6	0		
PHF	.857	.878	.740	.000	.831	.667	.917	.857	.000	.977	.694	.828	.750	.000	.859	.772	.700	.641	.000	.748	.836
Vehicles	23	507	224	0	754	8	10	23	0	41	25	336	12	0	373	243	13	37	0	293	1461
% Vehicles	95.8	98.8	97.0	0	98.2	100	90.9	95.8	0	95.3	100	98.5	100	0	98.7	98.4	92.9	90.2	0	97.0	98.0
Heavy Vehicles	1	6	7	0	14	0	1	1	0	2	0	5	0	0	5	4	1	4	0	9	30
% Heavy Vehicles	4.2	1.2	3.0	0	1.8	0	9.1	4.2	0	4.7	0	1.5	0	0	1.3	1.6	7.1	9.8	0	3.0	2.0

Peak Hour Analysis From 14:00 to 15:45 - Peak 1 of 1
Peak Hour for Each Approach Begins at:

	15:00					15:00					14:45					15:00				
+0 mins.	5	104	46	0	155	1	**3**	**7**	0	**11**	7	91	1	0	99	41	3	4	0	48
+15 mins.	**7**	**146**	**78**	0	**231**	2	3	5	0	10	7	72	2	0	81	**80**	3	12	0	95
+30 mins.	7	136	51	0	194	2	2	7	0	11	3	**103**	**4**	0	**110**	80	**5**	**16**	0	**101**
+45 mins.	5	127	56	0	188	**3**	3	5	0	11	**9**	85	4	0	98	46	3	9	0	58
Total Volume	24	513	231	0	768	8	11	24	0	43	26	351	11	0	388	247	14	41	0	302
% App. Total	3.1	66.8	30.1	0		18.6	25.6	55.8	0		6.7	90.5	2.8	0		81.8	4.6	13.6	0	
PHF	.857	.878	.740	.000	.831	.667	.917	.857	.000	.977	.722	.852	.688	.000	.882	.772	.700	.641	.000	.748
Vehicles	23	507	224	0	754	8	10	23	0	41	26	348	11	0	385	243	13	37	0	293
% Vehicles	95.8	98.8	97	0	98.2	100	90.9	95.8	0	95.3	100	99.1	100	0	99.2	98.4	92.9	90.2	0	97
Heavy Vehicles	1	6	7	0	14	0	1	1	0	2	0	3	0	0	3	4	1	4	0	9
% Heavy Vehicles	4.2	1.2	3	0	1.8	0	9.1	4.2	0	4.7	0	0.9	0	0	0.8	1.6	7.1	9.8	0	3

GRAM Traffic Counting, inc.

3751 FM 1105, Bldg. A
Georgetown, TX 78626
512-832-8650

File Name : Site 1 - Lohman Ford Rd & Dawn Dr - PM
Site Code : 1_____
Start Date : 11/15/2023
Page No : 3

Groups Printed- Vehicles

	Lohman Ford Rd Southbound					Driveway Westbound					Lohman Ford Rd Northbound					Dawn Dr Eastbound					
Start Time	Left	Thru	Right	U-TURN	App. Total	Left	Thru	Right	U-TURN	App. Total	Left	Thru	Right	U-TURN	App. Total	Left	Thru	Right	U-TURN	App. Total	Int. Total
14:00	5	109	52	0	166	0	1	4	0	5	5	96	1	0	102	54	1	4	0	59	332
14:15	4	93	43	0	140	0	2	5	0	7	3	82	1	0	86	43	1	9	0	53	286
14:30	4	110	39	0	153	2	2	5	0	9	4	73	1	0	78	32	0	4	0	36	276
14:45	3	104	42	0	149	1	3	4	0	8	7	90	1	0	98	36	0	3	0	39	294
Total	16	416	176	0	608	3	8	18	0	29	19	341	4	0	364	165	2	20	0	187	1188
15:00	5	103	43	0	151	1	3	7	0	11	7	72	2	0	81	41	3	4	0	48	291
15:15	6	142	77	0	225	2	2	4	0	8	3	102	4	0	109	76	2	9	0	87	429
15:30	7	136	50	0	193	2	2	7	0	11	9	84	4	0	97	80	5	15	0	100	401
15:45	5	126	54	0	185	3	3	5	0	11	6	78	2	0	86	46	3	9	0	58	340
Total	23	507	224	0	754	8	10	23	0	41	25	336	12	0	373	243	13	37	0	293	1461
16:00	8	155	60	0	223	2	2	8	0	12	4	122	2	0	128	55	4	6	0	65	428
16:15	6	171	53	0	230	4	1	9	0	14	17	177	1	0	195	39	1	3	0	43	482
16:30	6	169	77	0	252	1	2	4	0	7	13	149	2	0	164	59	0	9	0	68	491
16:45	9	159	67	0	235	0	1	8	0	9	6	99	3	0	108	38	2	7	0	47	399
Total	29	654	257	0	940	7	6	29	0	42	40	547	8	0	595	191	7	25	0	223	1800
17:00	10	138	87	0	235	2	2	8	0	12	10	114	2	0	126	52	2	9	0	63	436
17:15	11	153	61	0	225	3	2	7	0	12	6	98	3	0	107	49	0	13	0	62	406
17:30	13	147	57	0	217	3	2	8	0	13	3	103	2	0	108	40	2	8	0	50	388
17:45	11	157	54	0	222	2	4	5	0	11	4	87	1	0	92	45	3	6	0	54	379
Total	45	595	259	0	899	10	10	28	0	48	23	402	8	0	433	186	7	36	0	229	1609
18:00	6	144	64	0	214	0	1	4	0	5	1	103	2	0	106	41	3	7	0	51	376
18:15	6	117	47	0	170	0	3	4	0	7	2	79	0	0	81	26	1	5	0	32	290
18:30	7	138	58	0	203	1	1	2	0	4	4	61	0	0	65	26	0	3	0	29	301
18:45	5	115	43	0	163	1	0	1	0	2	9	52	0	0	61	27	0	6	0	33	259
Total	24	514	212	0	750	2	5	11	0	18	16	295	2	0	313	120	4	21	0	145	1226
Grand Total	137	2686	1128	0	3951	30	39	109	0	178	123	1921	34	0	2078	905	33	139	0	1077	7284
Apprch %	3.5	68	28.5	0		16.9	21.9	61.2	0		5.9	92.4	1.6	0		84	3.1	12.9	0		
Total %	1.9	36.9	15.5	0	54.2	0.4	0.5	1.5	0	2.4	1.7	26.4	0.5	0	28.5	12.4	0.5	1.9	0	14.8	

	Lohman Ford Rd Southbound					Driveway Westbound					Lohman Ford Rd Northbound					Dawn Dr Eastbound					
Start Time	Left	Thru	Right	U-TURN	App. Total	Left	Thru	Right	U-TURN	App. Total	Left	Thru	Right	U-TURN	App. Total	Left	Thru	Right	U-TURN	App. Total	Int. Total
Peak Hour Analysis From 14:00 to 15:45 - Peak 1 of 1																					
Peak Hour for Entire Intersection Begins at 15:00																					
15:00	5	103	43	0	151	1	**3**	**7**	0	**11**	7	72	2	0	81	41	3	4	0	48	291
15:15	6	**142**	**77**	0	**225**	2	2	4	0	8	3	**102**	**4**	0	**109**	76	2	9	0	87	**429**
15:30	**7**	136	50	0	193	2	2	7	0	11	**9**	84	4	0	97	**80**	**5**	**15**	0	**100**	401
15:45	5	126	54	0	185	**3**	3	5	0	11	6	78	2	0	86	46	3	9	0	58	340
Total Volume	23	507	224	0	754	8	10	23	0	41	25	336	12	0	373	243	13	37	0	293	1461
% App. Total	3.1	67.2	29.7	0		19.5	24.4	56.1	0		6.7	90.1	3.2	0		82.9	4.4	12.6	0		
PHF	.821	.893	.727	.000	.838	.667	.833	.821	.000	.932	.694	.824	.750	.000	.856	.759	.650	.617	.000	.733	.851

GRAM Traffic Counting, inc.

3751 FM 1105, Bldg. A
Georgetown, TX 78626
512-832-8650

File Name : Site 1 - Lohman Ford Rd & Dawn Dr - PM
Site Code : 1_____
Start Date : 11/15/2023
Page No : 4

	Lohman Ford Rd Southbound					Driveway Westbound					Lohman Ford Rd Northbound					Dawn Dr Eastbound					
Start Time	Left	Thru	Right	U-TURN	App. Total	Left	Thru	Right	U-TURN	App. Total	Left	Thru	Right	U-TURN	App. Total	Left	Thru	Right	U-TURN	App. Total	Int. Total
Peak Hour Analysis From 14:00 to 15:45 - Peak 1 of 1																					
Peak Hour for Each Approach Begins at:																					
	15:00					15:00					14:45					15:00					
+0 mins.	5	103	43	0	151	1	**3**	**7**	0	**11**	7	90	1	0	98	41	3	4	0	48	
+15 mins.	6	**142**	**77**	0	**225**	2	2	4	0	8	7	72	2	0	81	76	2	9	0	87	
+30 mins.	**7**	136	50	0	193	2	2	7	0	11	3	**102**	**4**	0	**109**	**80**	**5**	**15**	0	**100**	
+45 mins.	5	126	54	0	185	**3**	3	5	0	11	**9**	84	4	0	97	46	3	9	0	58	
Total Volume	23	507	224	0	754	8	10	23	0	41	26	348	11	0	385	243	13	37	0	293	
% App. Total	3.1	67.2	29.7	0		19.5	24.4	56.1	0		6.8	90.4	2.9	0		82.9	4.4	12.6	0		
PHF	.821	.893	.727	.000	.838	.667	.833	.821	.000	.932	.722	.853	.688	.000	.883	.759	.650	.617	.000	.733	

GRAM Traffic Counting, inc.

3751 FM 1105, Bldg. A
Georgetown, TX 78626
512-832-8650

File Name : Site 1 - Lohman Ford Rd & Dawn Dr - PM
Site Code : 1_____
Start Date : 11/15/2023
Page No : 5

Groups Printed- Heavy Vehicles

	Lohman Ford Rd Southbound					Driveway Westbound					Lohman Ford Rd Northbound					Dawn Dr Eastbound					
Start Time	Left	Thru	Right	U-TURN	App. Total	Left	Thru	Right	U-TURN	App. Total	Left	Thru	Right	U-TURN	App. Total	Left	Thru	Right	U-TURN	App. Total	Int. Total
14:00	0	2	1	0	3	0	0	0	0	0	0	0	0	0	0	1	0	0	0	1	4
14:15	0	2	0	0	2	0	0	0	0	0	0	1	0	0	1	1	0	0	0	1	4
14:30	0	0	2	0	2	0	0	0	0	0	0	2	0	0	2	0	0	0	0	0	4
14:45	0	3	1	0	4	0	0	0	0	0	0	1	0	0	1	0	0	1	0	1	6
Total	0	7	4	0	11	0	0	0	0	0	0	4	0	0	4	2	0	1	0	3	18
15:00	0	1	3	0	4	0	0	0	0	0	0	0	0	0	0	0	0	0	0	0	4
15:15	1	4	1	0	6	0	1	1	0	2	0	1	0	0	1	4	1	3	0	8	17
15:30	0	0	1	0	1	0	0	0	0	0	0	1	0	0	1	0	0	1	0	1	3
15:45	0	1	2	0	3	0	0	0	0	0	0	3	0	0	3	0	0	0	0	0	6
Total	1	6	7	0	14	0	1	1	0	2	0	5	0	0	5	4	1	4	0	9	30
16:00	1	3	2	0	6	0	0	0	0	0	0	2	0	0	2	0	0	0	0	0	8
16:15	0	0	1	0	1	0	0	0	0	0	0	1	0	0	1	2	0	1	0	3	5
16:30	1	1	0	0	2	1	0	0	0	1	0	3	0	0	3	1	0	0	0	1	7
16:45	0	3	1	0	4	0	0	0	0	0	0	2	0	0	2	0	0	0	0	0	6
Total	2	7	4	0	13	1	0	0	0	1	0	8	0	0	8	3	0	1	0	4	26
17:00	0	1	1	0	2	0	0	0	0	0	0	2	0	0	2	0	0	0	0	0	4
17:15	0	1	0	0	1	0	0	0	0	0	0	1	0	0	1	1	0	0	0	1	3
17:30	0	0	0	0	0	0	0	0	0	0	0	1	0	0	1	0	0	0	0	0	1
17:45	0	2	0	0	2	0	0	0	0	0	0	2	0	0	2	0	0	0	0	0	4
Total	0	4	1	0	5	0	0	0	0	0	0	6	0	0	6	1	0	0	0	1	12
18:00	0	0	0	0	0	0	0	0	0	0	0	4	0	0	4	0	0	0	0	0	4
18:15	0	0	2	0	2	0	0	0	0	0	0	1	0	0	1	1	0	0	0	1	4
18:30	0	1	0	0	1	0	0	0	0	0	0	0	0	0	0	1	0	0	0	1	2
18:45	0	0	0	0	0	0	0	0	0	0	0	0	0	0	0	0	0	0	0	0	0
Total	0	1	2	0	3	0	0	0	0	0	0	5	0	0	5	2	0	0	0	2	10
Grand Total	3	25	18	0	46	1	1	1	0	3	0	28	0	0	28	12	1	6	0	19	96
Apprch %	6.5	54.3	39.1	0		33.3	33.3	33.3	0		0	100	0	0		63.2	5.3	31.6	0		
Total %	3.1	26	18.8	0	47.9	1	1	1	0	3.1	0	29.2	0	0	29.2	12.5	1	6.2	0	19.8	

	Lohman Ford Rd Southbound					Driveway Westbound					Lohman Ford Rd Northbound					Dawn Dr Eastbound					
Start Time	Left	Thru	Right	U-TURN	App. Total	Left	Thru	Right	U-TURN	App. Total	Left	Thru	Right	U-TURN	App. Total	Left	Thru	Right	U-TURN	App. Total	Int. Total
Peak Hour Analysis From 14:00 to 15:45 - Peak 1 of 1																					
Peak Hour for Entire Intersection Begins at 14:30																					
14:30	0	0	2	0	2	0	0	0	0	0	0	**2**	0	0	**2**	0	0	0	0	0	4
14:45	0	3	1	0	4	0	0	0	0	0	0	1	0	0	1	0	0	1	0	1	6
15:00	0	1	**3**	0	4	0	0	0	0	0	0	0	0	0	0	0	0	0	0	0	4
15:15	**1**	**4**	1	0	**6**	0	**1**	**1**	0	**2**	0	1	0	0	1	**4**	**1**	**3**	0	**8**	**17**
Total Volume	1	8	7	0	16	0	1	1	0	2	0	4	0	0	4	4	1	4	0	9	31
% App. Total	6.2	50	43.8	0		0	50	50	0		0	100	0	0		44.4	11.1	44.4	0		
PHF	.250	.500	.583	.000	.667	.000	.250	.250	.000	.250	.000	.500	.000	.000	.500	.250	.250	.333	.000	.281	.456

GRAM Traffic Counting, inc.

3751 FM 1105, Bldg. A
Georgetown, TX 78626
512-832-8650

File Name : Site 1 - Lohman Ford Rd & Dawn Dr - PM
Site Code : 1_____
Start Date : 11/15/2023
Page No : 6

	Lohman Ford Rd Southbound					Driveway Westbound					Lohman Ford Rd Northbound					Dawn Dr Eastbound					
Start Time	Left	Thru	Right	U-TURN	App. Total	Left	Thru	Right	U-TURN	App. Total	Left	Thru	Right	U-TURN	App. Total	Left	Thru	Right	U-TURN	App. Total	Int. Total
Peak Hour Analysis From 14:00 to 15:45 - Peak 1 of 1																					
Peak Hour for Each Approach Begins at:																					
	14:30					14:30					15:00					14:45					
+0 mins.	0	0	2	0	2	0	0	0	0	0	0	0	0	0	0	0	0	1	0	1	
+15 mins.	0	3	1	0	4	0	0	0	0	0	0	1	0	0	1	0	0	0	0	0	
+30 mins.	0	1	**3**	0	4	0	0	0	0	0	0	1	0	0	1	**4**	**1**	**3**	0	**8**	
+45 mins.	**1**	**4**	1	0	**6**	0	**1**	**1**	0	**2**	0	**3**	0	0	**3**	0	0	1	0	1	
Total Volume	1	8	7	0	16	0	1	1	0	2	0	5	0	0	5	4	1	5	0	10	
% App. Total	6.2	50	43.8	0		0	50	50	0		0	100	0	0		40	10	50	0		
PHF	.250	.500	.583	.000	.667	.000	.250	.250	.000	.250	.000	.417	.000	.000	.417	.250	.250	.417	.000	.313	

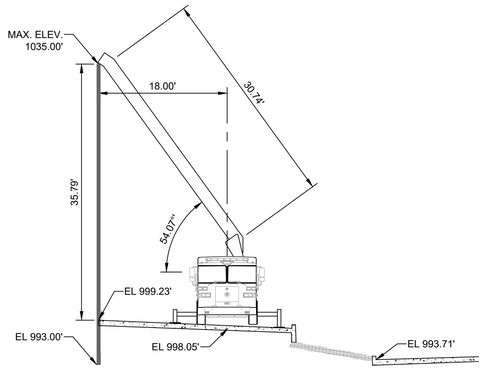

1 POSITION 1 ELEVATION VIEW

0 5' 10' 20'

SCALE: 1" = 10'

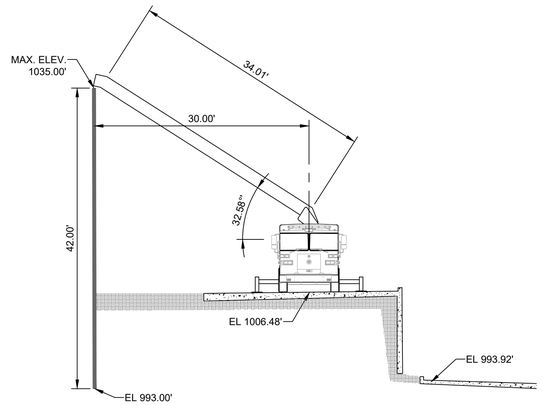

2 POSITION 2 ELEVATION VIEW

0 5' 10' 20'

SCALE: 1" = 10'

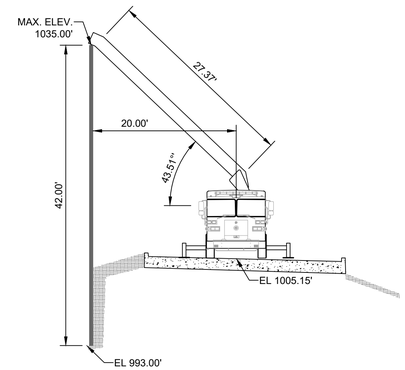

3 POSITION 3 ELEVATION VIEW

0 5' 10' 20'

SCALE: 1" = 10'

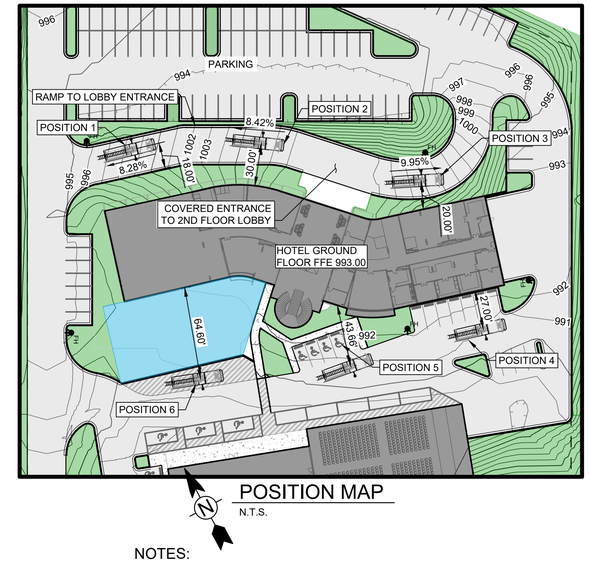

POSITION MAP

N.T.S.

NOTES:

1. ALL ELEVATIONS SHOWN ARE APPROXIMATE.
2. OUTRIGGERS ARE SHOWN AT FULL EXTENSION.
3. LADDER EXTENSION NOT TO EXCEED 75'
4. TRUCK SHOWN IS BASED OFF DATA DOWNLOADED FOR SUTPHEN MODEL SL75 FROM THE MANUFACTURER'S WEB SITE ON 05/30/2025.

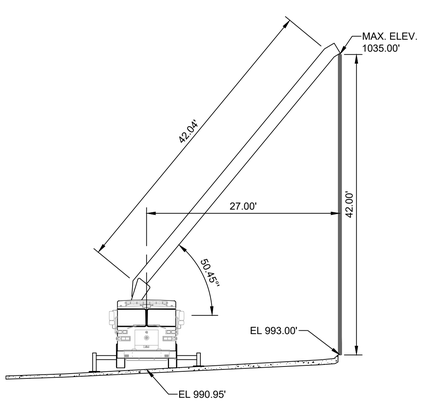

4 POSITION 4 ELEVATION VIEW

0 5' 10' 20'

SCALE: 1" = 10'

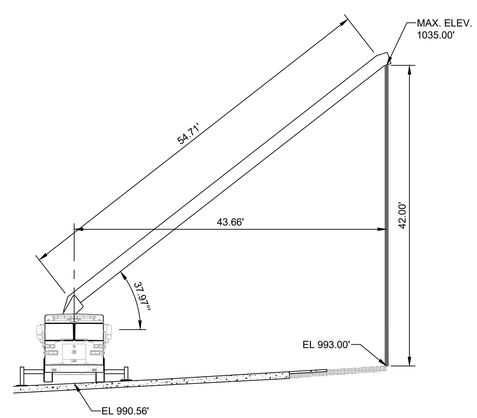

5 POSITION 5 ELEVATION VIEW

0 5' 10' 20'

SCALE: 1" = 10'

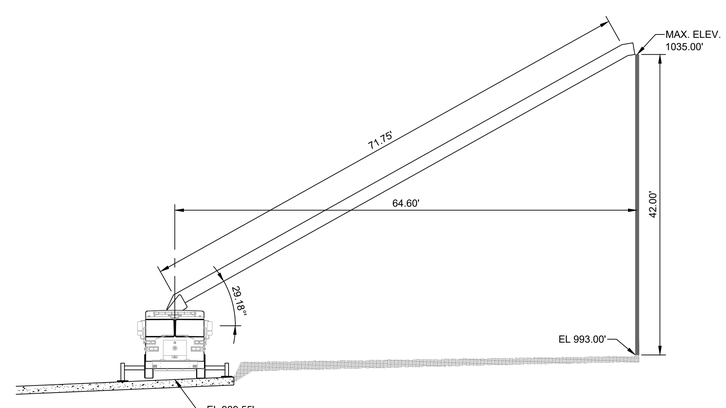

6 POSITION 6 ELEVATION VIEW

0 5' 10' 20'

SCALE: 1" = 10'

STATE OF TEXAS
WILLIAM E. PARNELL
121598
LICENSED
PROFESSIONAL ENGINEER
03/25/26

parnell engineering
www.parnellengineeringinc.com
500 E. WHITESTONE BLVD (#1419)
CEDAR PARK, TX 78613
512-431-8411
TEXAS REGISTRATION FIRM NO. F-19566

MARK	DATE	DESCRIPTION	BY

LAVERNE DEVELOPERS
VISTA VERDE RESORT HOTEL
19708 BOGGY FORD ROAD, LAGO VISTA, TEXAS 78645

VERTICAL FIRE ACCESS ELEVATIONS

Project No:
Designed By:
Drawn By:
Checked By:

F1

Sheet of 29

File No: 2511.01 ########

Copyright: Parnell Engineering

Bar Measures 1 inch, otherwise drawing not to scale

3/25/2026 11:26:41 AM - J:\2511_LAVERNE DEVELOPERS\2511.01 VISTA VERDE RESORT HOTEL\CAD\EXHIBITS\F1 VERTICAL FIRE ACCESS ELEVATIONS.DWG - MIKE RECTOR

GRAM Traffic Counting, inc.

3751 FM 1105, Bldg. A
Georgetown, TX 78626
512-832-8650

File Name : Site 1 - Lohman Ford Rd & Dawn Dr - PM
Site Code : 1_____
Start Date : 11/15/2023
Page No : 7

Groups Printed- Pedestrians

	Lohman Ford Rd Southbound					Driveway Westbound					Lohman Ford Rd Northbound					Dawn Dr Eastbound					
Start Time	Left	Thru	Right	U-TURN	App. Total	Left	Thru	Right	U-TURN	App. Total	Left	Thru	Right	U-TURN	App. Total	Left	Thru	Right	U-TURN	App. Total	Int. Total
14:00	0	0	0	0	0	0	0	0	0	0	0	0	0	0	0	0	0	0	0	0	0
14:15	0	0	0	0	0	0	0	0	0	0	0	0	0	0	0	0	0	0	0	0	0
14:30	0	0	0	0	0	0	0	0	0	0	0	0	0	0	0	0	0	0	0	0	0
14:45	0	0	0	0	0	0	0	0	0	0	0	0	0	0	0	0	0	0	0	0	0
Total	0	0	0	0	0	0	0	0	0	0	0	0	0	0	0	0	0	0	0	0	0
15:00	0	0	0	0	0	0	0	0	0	0	0	0	0	0	0	0	0	0	0	0	0
15:15	0	0	0	0	0	0	0	0	0	0	0	0	0	0	0	0	0	0	0	0	0
15:30	0	0	0	0	0	0	0	0	0	0	0	0	0	0	0	0	0	0	0	0	0
15:45	0	0	0	0	0	0	0	0	0	0	0	0	0	0	0	0	0	0	0	0	0
Total	0	0	0	0	0	0	0	0	0	0	0	0	0	0	0	0	0	0	0	0	0
16:00	0	0	0	0	0	0	0	0	0	0	0	0	0	0	0	0	0	0	0	0	0
16:15	0	0	0	0	0	0	0	0	0	0	0	0	0	0	0	0	0	0	0	0	0
16:30	0	0	0	0	0	0	0	0	0	0	0	0	0	0	0	0	0	0	0	0	0
16:45	0	0	0	0	0	0	0	0	0	0	0	0	0	0	0	0	0	0	0	0	0
Total	0	0	0	0	0	0	0	0	0	0	0	0	0	0	0	0	0	0	0	0	0
17:00	0	0	0	0	0	0	0	0	0	0	0	0	0	0	0	0	0	0	0	0	0
17:15	0	0	0	0	0	0	0	0	0	0	0	0	0	0	0	0	0	0	0	0	0
17:30	0	0	0	0	0	0	0	0	0	0	0	0	0	0	0	0	0	0	0	0	0
17:45	0	0	0	0	0	0	0	0	0	0	0	0	0	0	0	0	0	0	0	0	0
Total	0	0	0	0	0	0	0	0	0	0	0	0	0	0	0	0	0	0	0	0	0
18:00	0	0	0	0	0	0	0	0	0	0	0	0	0	0	0	0	0	0	0	0	0
18:15	0	0	0	0	0	0	0	0	0	0	0	0	0	0	0	0	0	0	0	0	0
18:30	0	0	0	0	0	0	0	0	0	0	0	0	0	0	0	0	0	0	0	0	0
18:45	0	0	0	0	0	0	0	0	0	0	0	0	0	0	0	0	0	0	0	0	0
Total	0	0	0	0	0	0	0	0	0	0	0	0	0	0	0	0	0	0	0	0	0
Grand Total	0	0	0	0	0	0	0	0	0	0	0	0	0	0	0	0	0	0	0	0	0
Apprch %	0	0	0	0		0	0	0	0		0	0	0	0		0	0	0	0		
Total %																					

	Lohman Ford Rd Southbound					Driveway Westbound					Lohman Ford Rd Northbound					Dawn Dr Eastbound					
Start Time	Left	Thru	Right	U-TURN	App. Total	Left	Thru	Right	U-TURN	App. Total	Left	Thru	Right	U-TURN	App. Total	Left	Thru	Right	U-TURN	App. Total	Int. Total
Peak Hour Analysis From 14:00 to 15:45 - Peak 1 of 1																					
Peak Hour for Entire Intersection Begins at 14:00																					
14:00	0	0	0	0	0	0	0	0	0	0	0	0	0	0	0	0	0	0	0	0	0
14:15	0	0	0	0	0	0	0	0	0	0	0	0	0	0	0	0	0	0	0	0	0
14:30	0	0	0	0	0	0	0	0	0	0	0	0	0	0	0	0	0	0	0	0	0
14:45	0	0	0	0	0	0	0	0	0	0	0	0	0	0	0	0	0	0	0	0	0
Total Volume	0	0	0	0	0	0	0	0	0	0	0	0	0	0	0	0	0	0	0	0	0
% App. Total	0	0	0	0		0	0	0	0		0	0	0	0		0	0	0	0		
PHF	.000	.000	.000	.000	.000	.000	.000	.000	.000	.000	.000	.000	.000	.000	.000	.000	.000	.000	.000	.000	.000

GRAM Traffic Counting, inc.

3751 FM 1105, Bldg. A
Georgetown, TX 78626
512-832-8650

File Name : Site 1 - Lohman Ford Rd & Dawn Dr - PM
Site Code : 1_____
Start Date : 11/15/2023
Page No : 8

	Lohman Ford Rd Southbound					Driveway Westbound					Lohman Ford Rd Northbound					Dawn Dr Eastbound					
Start Time	Left	Thru	Right	U-TURN	App. Total	Left	Thru	Right	U-TURN	App. Total	Left	Thru	Right	U-TURN	App. Total	Left	Thru	Right	U-TURN	App. Total	Int. Total
Peak Hour Analysis From 14:00 to 15:45 - Peak 1 of 1																					
Peak Hour for Each Approach Begins at:																					
	14:00					14:00					14:00					14:00					
+0 mins.	0	0	0	0	0	0	0	0	0	0	0	0	0	0	0	0	0	0	0	0	
+15 mins.	0	0	0	0	0	0	0	0	0	0	0	0	0	0	0	0	0	0	0	0	
+30 mins.	0	0	0	0	0	0	0	0	0	0	0	0	0	0	0	0	0	0	0	0	
+45 mins.	0	0	0	0	0	0	0	0	0	0	0	0	0	0	0	0	0	0	0	0	
Total Volume	0	0	0	0	0	0	0	0	0	0	0	0	0	0	0	0	0	0	0	0	
% App. Total	0	0	0	0		0	0	0	0		0	0	0	0		0	0	0	0		
PHF	.000	.000	.000	.000	.000	.000	.000	.000	.000	.000	.000	.000	.000	.000	.000	.000	.000	.000	.000	.000	

GRAM Traffic Counting, inc.

3751 FM 1105, Bldg. A
Georgetown, TX 78626
512-832-8650

File Name : Site 2 - Lohman Ford Rd & Boggy Ford Rd - AM
Site Code : 2
Start Date : 11/15/2023
Page No : 1

Groups Printed- Vehicles - Heavy Vehicles

	Lohman Ford Rd Southbound					Shoreline Ranch Rd Westbound					Lohman Ford Rd Northbound					Boggy Ford Rd Eastbound					
Start Time	Left	Thru	Right	U-TURN	App. Total	Left	Thru	Right	U-TURN	App. Total	Left	Thru	Right	U-TURN	App. Total	Left	Thru	Right	U-TURN	App. Total	Int. Total
07:00	7	8	13	0	28	0	0	4	0	4	0	33	0	0	33	90	1	2	0	93	158
07:15	5	20	44	0	69	0	1	2	0	3	2	50	0	0	52	134	0	2	0	136	260
07:30	5	30	53	0	88	0	0	1	0	1	6	45	0	0	51	110	3	3	0	116	256
07:45	4	29	60	0	93	1	0	2	0	3	4	56	2	0	62	100	0	5	0	105	263
Total	21	87	170	0	278	1	1	9	0	11	12	184	2	0	198	434	4	12	0	450	937
08:00	2	24	34	0	60	0	0	7	0	7	4	43	0	0	47	95	0	3	0	98	212
08:15	2	16	53	0	71	0	0	3	0	3	5	45	0	0	50	127	1	2	0	130	254
08:30	1	36	65	0	102	0	0	1	0	1	0	36	0	0	36	97	1	3	0	101	240
08:45	2	29	40	0	71	0	2	4	0	6	3	31	0	0	34	74	2	11	0	87	198
Total	7	105	192	0	304	0	2	15	0	17	12	155	0	0	167	393	4	19	0	416	904
Grand Total	28	192	362	0	582	1	3	24	0	28	24	339	2	0	365	827	8	31	0	866	1841
Apprch %	4.8	33	62.2	0		3.6	10.7	85.7	0		6.6	92.9	0.5	0		95.5	0.9	3.6	0		
Total %	1.5	10.4	19.7	0	31.6	0.1	0.2	1.3	0	1.5	1.3	18.4	0.1	0	19.8	44.9	0.4	1.7	0	47	
Vehicles	25	187	351	0	563	1	3	24	0	28	23	335	2	0	360	819	7	31	0	857	1808
% Vehicles	89.3	97.4	97	0	96.7	100	100	100	0	100	95.8	98.8	100	0	98.6	99	87.5	100	0	99	98.2
Heavy Vehicles	3	5	11	0	19	0	0	0	0	0	1	4	0	0	5	8	1	0	0	9	33
% Heavy Vehicles	10.7	2.6	3	0	3.3	0	0	0	0	0	4.2	1.2	0	0	1.4	1	12.5	0	0	1	1.8

	Lohman Ford Rd Southbound					Shoreline Ranch Rd Westbound					Lohman Ford Rd Northbound					Boggy Ford Rd Eastbound					
Start Time	Left	Thru	Right	U-TURN	App. Total	Left	Thru	Right	U-TURN	App. Total	Left	Thru	Right	U-TURN	App. Total	Left	Thru	Right	U-TURN	App. Total	Int. Total
Peak Hour Analysis From 07:00 to 08:45 - Peak 1 of 1																					
Peak Hour for Entire Intersection Begins at 07:15																					
07:15	**5**	20	44	0	69	0	**1**	2	0	3	2	50	0	0	52	**134**	0	2	0	**136**	260
07:30	5	**30**	53	0	88	0	0	1	0	1	**6**	45	0	0	51	110	**3**	3	0	116	256
07:45	4	29	**60**	0	**93**	**1**	0	2	0	3	4	**56**	**2**	0	**62**	100	0	**5**	0	105	**263**
08:00	2	24	34	0	60	0	0	**7**	0	**7**	4	43	0	0	47	95	0	3	0	98	212
Total Volume	16	103	191	0	310	1	1	12	0	14	16	194	2	0	212	439	3	13	0	455	991
% App. Total	5.2	33.2	61.6	0		7.1	7.1	85.7	0		7.5	91.5	0.9	0		96.5	0.7	2.9	0		
PHF	.800	.858	.796	.000	.833	.250	.250	.429	.000	.500	.667	.866	.250	.000	.855	.819	.250	.650	.000	.836	.942
Vehicles	15	100	186	0	301	1	1	12	0	14	16	192	2	0	210	437	2	13	0	452	977
% Vehicles	93.8	97.1	97.4	0	97.1	100	100	100	0	100	100	99.0	100	0	99.1	99.5	66.7	100	0	99.3	98.6
Heavy Vehicles	1	3	5	0	9	0	0	0	0	0	0	2	0	0	2	2	1	0	0	3	14
% Heavy Vehicles	6.3	2.9	2.6	0	2.9	0	0	0	0	0	0	1.0	0	0	0.9	0.5	33.3	0	0	0.7	1.4

GRAM Traffic Counting, inc.

3751 FM 1105, Bldg. A
Georgetown, TX 78626
512-832-8650

File Name : Site 2 - Lohman Ford Rd & Boggy Ford Rd - AM
Site Code : 2
Start Date : 11/15/2023
Page No : 2

	Lohman Ford Rd Southbound					Shoreline Ranch Rd Westbound					Lohman Ford Rd Northbound					Boggy Ford Rd Eastbound					
Start Time	Left	Thru	Right	U-TURN	App. Total	Left	Thru	Right	U-TURN	App. Total	Left	Thru	Right	U-TURN	App. Total	Left	Thru	Right	U-TURN	App. Total	Int. Total
Peak Hour Analysis From 07:00 to 08:45 - Peak 1 of 1																					
Peak Hour for Each Approach Begins at:																					
	07:45					08:00					07:15					07:15					
+0 mins.	**4**	29	60	0	93	0	0	**7**	0	**7**	2	50	0	0	52	**134**	0	2	0	**136**	
+15 mins.	2	24	34	0	60	0	0	3	0	3	**6**	45	0	0	51	110	**3**	3	0	116	
+30 mins.	2	16	53	0	71	0	0	1	0	1	4	**56**	**2**	0	**62**	100	0	**5**	0	105	
+45 mins.	1	**36**	**65**	0	**102**	0	**2**	4	0	6	4	43	0	0	47	95	0	3	0	98	
Total Volume	9	105	212	0	326	0	2	15	0	17	16	194	2	0	212	439	3	13	0	455	
% App. Total	2.8	32.2	65	0		0	11.8	88.2	0		7.5	91.5	0.9	0		96.5	0.7	2.9	0		
PHF	.563	.729	.815	.000	.799	.000	.250	.536	.000	.607	.667	.866	.250	.000	.855	.819	.250	.650	.000	.836	
Vehicles	9	102	206	0	317	0	2	15	0	17	16	192	2	0	210	437	2	13	0	452	
% Vehicles	100	97.1	97.2	0	97.2	0	100	100	0	100	100	99	100	0	99.1	99.5	66.7	100	0	99.3	
Heavy Vehicles	0	3	6	0	9	0	0	0	0	0	0	2	0	0	2	2	1	0	0	3	
% Heavy Vehicles	0	2.9	2.8	0	2.8	0	0	0	0	0	0	1	0	0	0.9	0.5	33.3	0	0	0.7	

GRAM Traffic Counting, inc.

3751 FM 1105, Bldg. A
Georgetown, TX 78626
512-832-8650

File Name : Site 2 - Lohman Ford Rd & Boggy Ford Rd - AM
Site Code : 2
Start Date : 11/15/2023
Page No : 4

Groups Printed- Heavy Vehicles

	Lohman Ford Rd Southbound					Shoreline Ranch Rd Westbound					Lohman Ford Rd Northbound					Boggy Ford Rd Eastbound					
Start Time	Left	Thru	Right	U-TURN	App. Total	Left	Thru	Right	U-TURN	App. Total	Left	Thru	Right	U-TURN	App. Total	Left	Thru	Right	U-TURN	App. Total	Int. Total
07:00	1	1	1	0	3	0	0	0	0	0	0	0	0	0	0	0	0	0	0	0	3
07:15	1	1	3	0	5	0	0	0	0	0	0	0	0	0	0	0	0	0	0	0	5
07:30	0	0	1	0	1	0	0	0	0	0	0	1	0	0	1	0	1	0	0	1	3
07:45	0	1	0	0	1	0	0	0	0	0	0	0	0	0	0	2	0	0	0	2	3
Total	2	3	5	0	10	0	0	0	0	0	0	1	0	0	1	2	1	0	0	3	14
08:00	0	1	1	0	2	0	0	0	0	0	0	1	0	0	1	0	0	0	0	0	3
08:15	0	0	3	0	3	0	0	0	0	0	1	1	0	0	2	3	0	0	0	3	8
08:30	0	1	2	0	3	0	0	0	0	0	0	0	0	0	0	2	0	0	0	2	5
08:45	1	0	0	0	1	0	0	0	0	0	0	1	0	0	1	1	0	0	0	1	3
Total	1	2	6	0	9	0	0	0	0	0	1	3	0	0	4	6	0	0	0	6	19
Grand Total	3	5	11	0	19	0	0	0	0	0	1	4	0	0	5	8	1	0	0	9	33
Apprch %	15.8	26.3	57.9	0		0	0	0	0		20	80	0	0		88.9	11.1	0	0		
Total %	9.1	15.2	33.3	0	57.6	0	0	0	0	0	3	12.1	0	0	15.2	24.2	3	0	0	27.3	

	Lohman Ford Rd Southbound					Shoreline Ranch Rd Westbound					Lohman Ford Rd Northbound					Boggy Ford Rd Eastbound					
Start Time	Left	Thru	Right	U-TURN	App. Total	Left	Thru	Right	U-TURN	App. Total	Left	Thru	Right	U-TURN	App. Total	Left	Thru	Right	U-TURN	App. Total	Int. Total
Peak Hour Analysis From 07:00 to 08:45 - Peak 1 of 1																					
Peak Hour for Entire Intersection Begins at 07:45																					
07:45	0	**1**	0	0	1	0	0	0	0	0	0	0	0	0	0	2	0	0	0	2	3
08:00	0	1	1	0	2	0	0	0	0	0	0	**1**	0	0	1	0	0	0	0	0	3
08:15	0	0	**3**	0	**3**	0	0	0	0	0	**1**	1	0	0	**2**	**3**	0	0	0	**3**	**8**
08:30	0	1	2	0	3	0	0	0	0	0	0	0	0	0	0	2	0	0	0	2	5
Total Volume	0	3	6	0	9	0	0	0	0	0	1	2	0	0	3	7	0	0	0	7	19
% App. Total	0	33.3	66.7	0		0	0	0	0		33.3	66.7	0	0		100	0	0	0		
PHF	.000	.750	.500	.000	.750	.000	.000	.000	.000	.000	.250	.500	.000	.000	.375	.583	.000	.000	.000	.583	.594

Peak Hour Analysis From 07:00 to 08:45 - Peak 1 of 1
Peak Hour for Each Approach Begins at:

	07:00					07:00					07:30					07:45				
+0 mins.	**1**	**1**	1	0	3	0	0	0	0	0	0	**1**	0	0	1	2	0	0	0	2
+15 mins.	1	1	**3**	0	**5**	0	0	0	0	0	0	0	0	0	0	0	0	0	0	0
+30 mins.	0	0	1	0	1	0	0	0	0	0	0	1	0	0	1	**3**	0	0	0	**3**
+45 mins.	0	1	0	0	1	0	0	0	0	0	**1**	1	0	0	**2**	2	0	0	0	2
Total Volume	2	3	5	0	10	0	0	0	0	0	1	3	0	0	4	7	0	0	0	7
% App. Total	20	30	50	0		0	0	0	0		25	75	0	0		100	0	0	0	
PHF	.500	.750	.417	.000	.500	.000	.000	.000	.000	.000	.250	.750	.000	.000	.500	.583	.000	.000	.000	.583

GRAM Traffic Counting, inc.

3751 FM 1105, Bldg. A
Georgetown, TX 78626
512-832-8650

File Name : Site 2 - Lohman Ford Rd & Boggy Ford Rd - AM
Site Code : 2
Start Date : 11/15/2023
Page No : 5

Groups Printed- Pedestrians

	Lohman Ford Rd Southbound					Shoreline Ranch Rd Westbound					Lohman Ford Rd Northbound					Boggy Ford Rd Eastbound					
Start Time	Left	Thru	Right	U-TURN	App. Total	Left	Thru	Right	U-TURN	App. Total	Left	Thru	Right	U-TURN	App. Total	Left	Thru	Right	U-TURN	App. Total	Int. Total
07:00	0	0	0	0	0	0	0	0	0	0	0	0	0	0	0	0	0	0	0	0	0
07:15	0	0	0	0	0	0	0	0	0	0	0	0	0	0	0	0	0	0	0	0	0
07:30	0	0	0	0	0	0	0	0	0	0	0	0	0	0	0	0	0	0	0	0	0
07:45	0	0	0	0	0	0	0	0	0	0	0	0	0	0	0	0	0	0	0	0	0
Total	0	0	0	0	0	0	0	0	0	0	0	0	0	0	0	0	0	0	0	0	0
08:00	0	0	0	0	0	0	0	0	0	0	0	0	0	0	0	0	0	0	0	0	0
08:15	0	0	0	0	0	0	0	0	0	0	0	0	0	0	0	0	0	0	0	0	0
08:30	0	0	0	0	0	0	0	0	0	0	0	0	0	0	0	0	0	0	0	0	0
08:45	0	0	0	0	0	0	0	0	0	0	0	0	0	0	0	0	0	0	0	0	0
Total	0	0	0	0	0	0	0	0	0	0	0	0	0	0	0	0	0	0	0	0	0
Grand Total	0	0	0	0	0	0	0	0	0	0	0	0	0	0	0	0	0	0	0	0	0
Apprch %	0	0	0	0		0	0	0	0		0	0	0	0		0	0	0	0		
Total %																					

	Lohman Ford Rd Southbound					Shoreline Ranch Rd Westbound					Lohman Ford Rd Northbound					Boggy Ford Rd Eastbound					
Start Time	Left	Thru	Right	U-TURN	App. Total	Left	Thru	Right	U-TURN	App. Total	Left	Thru	Right	U-TURN	App. Total	Left	Thru	Right	U-TURN	App. Total	Int. Total
Peak Hour Analysis From 07:00 to 08:45 - Peak 1 of 1																					
Peak Hour for Entire Intersection Begins at 07:00																					
07:00	0	0	0	0	0	0	0	0	0	0	0	0	0	0	0	0	0	0	0	0	0
07:15	0	0	0	0	0	0	0	0	0	0	0	0	0	0	0	0	0	0	0	0	0
07:30	0	0	0	0	0	0	0	0	0	0	0	0	0	0	0	0	0	0	0	0	0
07:45	0	0	0	0	0	0	0	0	0	0	0	0	0	0	0	0	0	0	0	0	0
Total Volume	0	0	0	0	0	0	0	0	0	0	0	0	0	0	0	0	0	0	0	0	0
% App. Total	0	0	0	0		0	0	0	0		0	0	0	0		0	0	0	0		
PHF	.000	.000	.000	.000	.000	.000	.000	.000	.000	.000	.000	.000	.000	.000	.000	.000	.000	.000	.000	.000	.000

Peak Hour Analysis From 07:00 to 08:45 - Peak 1 of 1
Peak Hour for Each Approach Begins at:

	07:00					07:00					07:00					07:00				
+0 mins.	0	0	0	0	0	0	0	0	0	0	0	0	0	0	0	0	0	0	0	0
+15 mins.	0	0	0	0	0	0	0	0	0	0	0	0	0	0	0	0	0	0	0	0
+30 mins.	0	0	0	0	0	0	0	0	0	0	0	0	0	0	0	0	0	0	0	0
+45 mins.	0	0	0	0	0	0	0	0	0	0	0	0	0	0	0	0	0	0	0	0
Total Volume	0	0	0	0	0	0	0	0	0	0	0	0	0	0	0	0	0	0	0	0
% App. Total	0	0	0	0		0	0	0	0		0	0	0	0		0	0	0	0	
PHF	.000	.000	.000	.000	.000	.000	.000	.000	.000	.000	.000	.000	.000	.000	.000	.000	.000	.000	.000	.000

GRAM Traffic Counting, inc.

3751 FM 1105, Bldg. A
Georgetown, TX 78626
512-832-8650

File Name : Site 2 - Lohman Ford Rd & Boggy Ford Rd - PM
Site Code : 2
Start Date : 11/15/2023
Page No : 1

Groups Printed- Vehicles - Heavy Vehicles

	Lohman Ford Rd Southbound					Shoreline Ranch Rd Westbound					Lohman Ford Rd Northbound					Boggy Ford Rd Eastbound					
Start Time	Left	Thru	Right	U-TURN	App. Total	Left	Thru	Right	U-TURN	App. Total	Left	Thru	Right	U-TURN	App. Total	Left	Thru	Right	U-TURN	App. Total	Int. Total
14:00	5	27	69	0	101	0	0	0	0	0	0	24	0	0	24	66	1	4	0	71	196
14:15	1	31	70	0	102	0	0	4	0	4	8	25	1	0	34	46	0	2	0	48	188
14:30	4	38	65	0	107	0	0	3	0	3	0	31	0	0	31	44	1	1	0	46	187
14:45	3	25	59	0	87	0	2	4	0	6	0	21	0	0	21	58	1	7	0	66	180
Total	13	121	263	0	397	0	2	11	0	13	8	101	1	0	110	214	3	14	0	231	751
15:00	4	34	65	0	103	1	0	6	0	7	2	35	1	0	38	48	0	6	0	54	202
15:15	1	42	106	0	149	0	1	3	0	4	4	38	0	0	42	61	3	10	0	74	269
15:30	4	42	112	0	158	0	1	1	0	2	5	28	0	0	33	40	0	4	0	44	237
15:45	0	43	83	0	126	1	2	3	0	6	5	30	0	0	35	70	0	5	0	75	242
Total	9	161	366	0	536	2	4	13	0	19	16	131	1	0	148	219	3	25	0	247	950
16:00	3	44	85	0	132	0	3	2	0	5	5	41	0	0	46	103	0	5	0	108	291
16:15	5	43	131	0	179	0	1	9	0	10	4	28	0	0	32	75	0	3	0	78	299
16:30	3	54	135	0	192	0	1	4	0	5	6	42	1	0	49	56	2	7	0	65	311
16:45	3	43	100	0	146	0	0	4	0	4	7	27	1	0	35	57	1	7	0	65	250
Total	14	184	451	0	649	0	5	19	0	24	22	138	2	0	162	291	3	22	0	316	1151
17:00	3	41	96	0	140	0	2	6	0	8	6	37	0	0	43	60	0	6	0	66	257
17:15	1	61	106	0	168	0	2	1	0	3	9	24	0	0	33	74	0	8	0	82	286
17:30	3	49	88	0	140	0	0	3	0	3	8	48	0	0	56	51	0	6	0	57	256
17:45	2	48	96	0	146	0	1	4	0	5	5	30	1	0	36	64	0	17	0	81	268
Total	9	199	386	0	594	0	5	14	0	19	28	139	1	0	168	249	0	37	0	286	1067
18:00	0	47	104	0	151	0	0	9	0	9	7	25	0	0	32	58	1	11	0	70	262
18:15	2	34	76	0	112	0	0	4	0	4	6	22	0	0	28	46	0	9	0	55	199
18:30	3	31	117	0	151	0	0	2	0	2	5	17	1	0	23	37	1	5	0	43	219
18:45	4	29	83	0	116	0	0	0	0	0	2	15	0	0	17	28	0	4	0	32	165
Total	9	141	380	0	530	0	0	15	0	15	20	79	1	0	100	169	2	29	0	200	845
Grand Total	54	806	1846	0	2706	2	16	72	0	90	94	588	6	0	688	1142	11	127	0	1280	4764
Apprch %	2	29.8	68.2	0		2.2	17.8	80	0		13.7	85.5	0.9	0		89.2	0.9	9.9	0		
Total %	1.1	16.9	38.7	0	56.8	0	0.3	1.5	0	1.9	2	12.3	0.1	0	14.4	24	0.2	2.7	0	26.9	
Vehicles	52	799	1830	0	2681	2	15	70	0	87	87	570	6	0	663	1125	11	121	0	1257	4688
% Vehicles	96.3	99.1	99.1	0	99.1	100	93.8	97.2	0	96.7	92.6	96.9	100	0	96.4	98.5	100	95.3	0	98.2	98.4
Heavy Vehicles	2	7	16	0	25	0	1	2	0	3	7	18	0	0	25	17	0	6	0	23	76
% Heavy Vehicles	3.7	0.9	0.9	0	0.9	0	6.2	2.8	0	3.3	7.4	3.1	0	0	3.6	1.5	0	4.7	0	1.8	1.6

GRAM Traffic Counting, inc.

3751 FM 1105, Bldg. A
Georgetown, TX 78626
512-832-8650

File Name : Site 2 - Lohman Ford Rd & Boggy Ford Rd - PM
Site Code : 2
Start Date : 11/15/2023
Page No : 2

	Lohman Ford Rd Southbound					Shoreline Ranch Rd Westbound					Lohman Ford Rd Northbound					Boggy Ford Rd Eastbound					
Start Time	Left	Thru	Right	U-TURN	App. Total	Left	Thru	Right	U-TURN	App. Total	Left	Thru	Right	U-TURN	App. Total	Left	Thru	Right	U-TURN	App. Total	Int. Total
Peak Hour Analysis From 14:00 to 18:45 - Peak 1 of 1																					
Peak Hour for Entire Intersection Begins at 16:00																					
16:00	3	44	85	0	132	0	**3**	2	0	5	5	41	0	0	46	**103**	0	5	0	**108**	291
16:15	**5**	43	131	0	179	0	1	**9**	0	**10**	4	28	0	0	32	75	0	3	0	78	299
16:30	3	**54**	**135**	0	**192**	0	1	4	0	5	6	**42**	**1**	0	**49**	56	**2**	**7**	0	65	**311**
16:45	3	43	100	0	146	0	0	4	0	4	**7**	27	1	0	35	57	1	7	0	65	250
Total Volume	14	184	451	0	649	0	5	19	0	24	22	138	2	0	162	291	3	22	0	316	1151
% App. Total	2.2	28.4	69.5	0		0	20.8	79.2	0		13.6	85.2	1.2	0		92.1	0.9	7	0		
PHF	.700	.852	.835	.000	.845	.000	.417	.528	.000	.600	.786	.821	.500	.000	.827	.706	.375	.786	.000	.731	.925
Vehicles	13	182	447	0	642	0	5	18	0	23	20	134	2	0	156	284	3	21	0	308	1129
% Vehicles	92.9	98.9	99.1	0	98.9	0	100	94.7	0	95.8	90.9	97.1	100	0	96.3	97.6	100	95.5	0	97.5	98.1
Heavy Vehicles	1	2	4	0	7	0	0	1	0	1	2	4	0	0	6	7	0	1	0	8	22
% Heavy Vehicles	7.1	1.1	0.9	0	1.1	0	0	5.3	0	4.2	9.1	2.9	0	0	3.7	2.4	0	4.5	0	2.5	1.9

Peak Hour Analysis From 14:00 to 18:45 - Peak 1 of 1
Peak Hour for Each Approach Begins at:

	16:15					16:15					17:00					15:45				
+0 mins.	**5**	43	131	0	179	0	1	**9**	0	**10**	6	37	0	0	43	70	0	5	0	75
+15 mins.	3	**54**	**135**	0	**192**	0	1	4	0	5	**9**	24	0	0	33	**103**	0	5	0	**108**
+30 mins.	3	43	100	0	146	0	0	4	0	4	8	**48**	0	0	**56**	75	0	3	0	78
+45 mins.	3	41	96	0	140	0	**2**	6	0	8	5	30	**1**	0	36	56	**2**	**7**	0	65
Total Volume	14	181	462	0	657	0	4	23	0	27	28	139	1	0	168	304	2	20	0	326
% App. Total	2.1	27.5	70.3	0		0	14.8	85.2	0		16.7	82.7	0.6	0		93.3	0.6	6.1	0	
PHF	.700	.838	.856	.000	.855	.000	.500	.639	.000	.675	.778	.724	.250	.000	.750	.738	.250	.714	.000	.755
Vehicles	14	179	459	0	652	0	4	22	0	26	27	136	1	0	164	293	2	18	0	313
% Vehicles	100	98.9	99.4	0	99.2	0	100	95.7	0	96.3	96.4	97.8	100	0	97.6	96.4	100	90	0	96
Heavy Vehicles	0	2	3	0	5	0	0	1	0	1	1	3	0	0	4	11	0	2	0	13
% Heavy Vehicles	0	1.1	0.6	0	0.8	0	0	4.3	0	3.7	3.6	2.2	0	0	2.4	3.6	0	10	0	4

GRAM Traffic Counting, inc.

3751 FM 1105, Bldg. A
Georgetown, TX 78626
512-832-8650

File Name : Site 2 - Lohman Ford Rd & Boggy Ford Rd - PM
Site Code : 2
Start Date : 11/15/2023
Page No : 3

Groups Printed- Vehicles

	Lohman Ford Rd Southbound					Shoreline Ranch Rd Westbound					Lohman Ford Rd Northbound					Boggy Ford Rd Eastbound					
Start Time	Left	Thru	Right	U-TURN	App. Total	Left	Thru	Right	U-TURN	App. Total	Left	Thru	Right	U-TURN	App. Total	Left	Thru	Right	U-TURN	App. Total	Int. Total
14:00	4	26	69	0	99	0	0	0	0	0	0	23	0	0	23	66	1	4	0	71	193
14:15	1	31	68	0	100	0	0	4	0	4	8	25	1	0	34	46	0	1	0	47	185
14:30	4	38	65	0	107	0	0	3	0	3	0	29	0	0	29	44	1	1	0	46	185
14:45	3	24	57	0	84	0	2	3	0	5	0	19	0	0	19	58	1	6	0	65	173
Total	12	119	259	0	390	0	2	10	0	12	8	96	1	0	105	214	3	12	0	229	736
15:00	4	34	65	0	103	1	0	6	0	7	1	35	1	0	37	48	0	6	0	54	201
15:15	1	42	105	0	148	0	1	3	0	4	3	37	0	0	40	59	3	9	0	71	263
15:30	4	41	109	0	154	0	1	1	0	2	3	28	0	0	31	40	0	4	0	44	231
15:45	0	42	83	0	125	1	1	3	0	5	5	29	0	0	34	65	0	4	0	69	233
Total	9	159	362	0	530	2	3	13	0	18	12	129	1	0	142	212	3	23	0	238	928
16:00	2	44	83	0	129	0	3	2	0	5	4	39	0	0	43	99	0	5	0	104	281
16:15	5	42	131	0	178	0	1	9	0	10	3	27	0	0	30	74	0	3	0	77	295
16:30	3	54	135	0	192	0	1	4	0	5	6	42	1	0	49	55	2	6	0	63	309
16:45	3	42	98	0	143	0	0	3	0	3	7	26	1	0	34	56	1	7	0	64	244
Total	13	182	447	0	642	0	5	18	0	23	20	134	2	0	156	284	3	21	0	308	1129
17:00	3	41	95	0	139	0	2	6	0	8	6	36	0	0	42	60	0	6	0	66	255
17:15	1	60	106	0	167	0	2	1	0	3	9	24	0	0	33	73	0	8	0	81	284
17:30	3	49	86	0	138	0	0	3	0	3	7	47	0	0	54	51	0	6	0	57	252
17:45	2	48	96	0	146	0	1	4	0	5	5	29	1	0	35	63	0	17	0	80	266
Total	9	198	383	0	590	0	5	14	0	19	27	136	1	0	164	247	0	37	0	284	1057
18:00	0	47	103	0	150	0	0	9	0	9	7	22	0	0	29	58	1	11	0	70	258
18:15	2	34	76	0	112	0	0	4	0	4	6	22	0	0	28	45	0	8	0	53	197
18:30	3	31	117	0	151	0	0	2	0	2	5	16	1	0	22	37	1	5	0	43	218
18:45	4	29	83	0	116	0	0	0	0	0	2	15	0	0	17	28	0	4	0	32	165
Total	9	141	379	0	529	0	0	15	0	15	20	75	1	0	96	168	2	28	0	198	838
Grand Total	52	799	1830	0	2681	2	15	70	0	87	87	570	6	0	663	1125	11	121	0	1257	4688
Apprch %	1.9	29.8	68.3	0		2.3	17.2	80.5	0		13.1	86	0.9	0		89.5	0.9	9.6	0		
Total %	1.1	17	39	0	57.2	0	0.3	1.5	0	1.9	1.9	12.2	0.1	0	14.1	24	0.2	2.6	0	26.8	

	Lohman Ford Rd Southbound					Shoreline Ranch Rd Westbound					Lohman Ford Rd Northbound					Boggy Ford Rd Eastbound					
Start Time	Left	Thru	Right	U-TURN	App. Total	Left	Thru	Right	U-TURN	App. Total	Left	Thru	Right	U-TURN	App. Total	Left	Thru	Right	U-TURN	App. Total	Int. Total
Peak Hour Analysis From 14:00 to 18:45 - Peak 1 of 1																					
Peak Hour for Entire Intersection Begins at 16:00																					
16:00	2	44	83	0	129	0	**3**	2	0	5	4	39	0	0	43	**99**	0	5	0	**104**	281
16:15	**5**	42	131	0	178	0	1	**9**	0	**10**	3	27	0	0	30	74	0	3	0	77	295
16:30	3	**54**	**135**	0	**192**	0	1	4	0	5	6	**42**	**1**	0	**49**	55	**2**	6	0	63	**309**
16:45	3	42	98	0	143	0	0	3	0	3	**7**	26	1	0	34	56	1	**7**	0	64	244
Total Volume	13	182	447	0	642	0	5	18	0	23	20	134	2	0	156	284	3	21	0	308	1129
% App. Total	2	28.3	69.6	0		0	21.7	78.3	0		12.8	85.9	1.3	0		92.2	1	6.8	0		
PHF	.650	.843	.828	.000	.836	.000	.417	.500	.000	.575	.714	.798	.500	.000	.796	.717	.375	.750	.000	.740	.913

GRAM Traffic Counting, inc.

3751 FM 1105, Bldg. A
Georgetown, TX 78626
512-832-8650

File Name : Site 2 - Lohman Ford Rd & Boggy Ford Rd - PM
Site Code : 2
Start Date : 11/15/2023
Page No : 4

	Lohman Ford Rd Southbound					Shoreline Ranch Rd Westbound					Lohman Ford Rd Northbound					Boggy Ford Rd Eastbound					
Start Time	Left	Thru	Right	U-TURN	App. Total	Left	Thru	Right	U-TURN	App. Total	Left	Thru	Right	U-TURN	App. Total	Left	Thru	Right	U-TURN	App. Total	Int. Total
Peak Hour Analysis From 14:00 to 18:45 - Peak 1 of 1																					
Peak Hour for Each Approach Begins at:																					
	16:15					16:15					17:00					15:45					
+0 mins.	**5**	42	131	0	178	0	1	**9**	0	**10**	6	36	0	0	42	65	0	4	0	69	
+15 mins.	3	**54**	**135**	0	**192**	0	1	4	0	5	**9**	24	0	0	33	**99**	0	5	0	**104**	
+30 mins.	3	42	98	0	143	0	0	3	0	3	7	**47**	0	0	**54**	74	0	3	0	77	
+45 mins.	3	41	95	0	139	0	**2**	6	0	8	5	29	**1**	0	35	55	**2**	**6**	0	63	
Total Volume	14	179	459	0	652	0	4	22	0	26	27	136	1	0	164	293	2	18	0	313	
% App. Total	2.1	27.5	70.4	0		0	15.4	84.6	0		16.5	82.9	0.6	0		93.6	0.6	5.8	0		
PHF	.700	.829	.850	.000	.849	.000	.500	.611	.000	.650	.750	.723	.250	.000	.759	.740	.250	.750	.000	.752	

GRAM Traffic Counting, inc.

3751 FM 1105, Bldg. A
Georgetown, TX 78626
512-832-8650

File Name : Site 2 - Lohman Ford Rd & Boggy Ford Rd - PM
Site Code : 2
Start Date : 11/15/2023
Page No : 5

Groups Printed- Heavy Vehicles

	Lohman Ford Rd Southbound					Shoreline Ranch Rd Westbound					Lohman Ford Rd Northbound					Boggy Ford Rd Eastbound					
Start Time	Left	Thru	Right	U-TURN	App. Total	Left	Thru	Right	U-TURN	App. Total	Left	Thru	Right	U-TURN	App. Total	Left	Thru	Right	U-TURN	App. Total	Int. Total
14:00	1	1	0	0	2	0	0	0	0	0	0	1	0	0	1	0	0	0	0	0	3
14:15	0	0	2	0	2	0	0	0	0	0	0	0	0	0	0	0	0	1	0	1	3
14:30	0	0	0	0	0	0	0	0	0	0	0	2	0	0	2	0	0	0	0	0	2
14:45	0	1	2	0	3	0	0	1	0	1	0	2	0	0	2	0	0	1	0	1	7
Total	1	2	4	0	7	0	0	1	0	1	0	5	0	0	5	0	0	2	0	2	15
15:00	0	0	0	0	0	0	0	0	0	0	1	0	0	0	1	0	0	0	0	0	1
15:15	0	0	1	0	1	0	0	0	0	0	1	1	0	0	2	2	0	1	0	3	6
15:30	0	1	3	0	4	0	0	0	0	0	2	0	0	0	2	0	0	0	0	0	6
15:45	0	1	0	0	1	0	1	0	0	1	0	1	0	0	1	5	0	1	0	6	9
Total	0	2	4	0	6	0	1	0	0	1	4	2	0	0	6	7	0	2	0	9	22
16:00	1	0	2	0	3	0	0	0	0	0	1	2	0	0	3	4	0	0	0	4	10
16:15	0	1	0	0	1	0	0	0	0	0	1	1	0	0	2	1	0	0	0	1	4
16:30	0	0	0	0	0	0	0	0	0	0	0	0	0	0	0	1	0	1	0	2	2
16:45	0	1	2	0	3	0	0	1	0	1	0	1	0	0	1	1	0	0	0	1	6
Total	1	2	4	0	7	0	0	1	0	1	2	4	0	0	6	7	0	1	0	8	22
17:00	0	0	1	0	1	0	0	0	0	0	0	1	0	0	1	0	0	0	0	0	2
17:15	0	1	0	0	1	0	0	0	0	0	0	0	0	0	0	1	0	0	0	1	2
17:30	0	0	2	0	2	0	0	0	0	0	1	1	0	0	2	0	0	0	0	0	4
17:45	0	0	0	0	0	0	0	0	0	0	0	1	0	0	1	1	0	0	0	1	2
Total	0	1	3	0	4	0	0	0	0	0	1	3	0	0	4	2	0	0	0	2	10
18:00	0	0	1	0	1	0	0	0	0	0	0	3	0	0	3	0	0	0	0	0	4
18:15	0	0	0	0	0	0	0	0	0	0	0	0	0	0	0	1	0	1	0	2	2
18:30	0	0	0	0	0	0	0	0	0	0	0	1	0	0	1	0	0	0	0	0	1
18:45	0	0	0	0	0	0	0	0	0	0	0	0	0	0	0	0	0	0	0	0	0
Total	0	0	1	0	1	0	0	0	0	0	0	4	0	0	4	1	0	1	0	2	7
Grand Total	2	7	16	0	25	0	1	2	0	3	7	18	0	0	25	17	0	6	0	23	76
Apprch %	8	28	64	0		0	33.3	66.7	0		28	72	0	0		73.9	0	26.1	0		
Total %	2.6	9.2	21.1	0	32.9	0	1.3	2.6	0	3.9	9.2	23.7	0	0	32.9	22.4	0	7.9	0	30.3	

	Lohman Ford Rd Southbound					Shoreline Ranch Rd Westbound					Lohman Ford Rd Northbound					Boggy Ford Rd Eastbound					
Start Time	Left	Thru	Right	U-TURN	App. Total	Left	Thru	Right	U-TURN	App. Total	Left	Thru	Right	U-TURN	App. Total	Left	Thru	Right	U-TURN	App. Total	Int. Total
Peak Hour Analysis From 14:00 to 18:45 - Peak 1 of 1																					
Peak Hour for Entire Intersection Begins at 15:15																					
15:15	0	0	1	0	1	0	0	0	0	0	1	1	0	0	2	2	0	**1**	0	3	6
15:30	0	**1**	**3**	0	**4**	0	0	0	0	0	**2**	0	0	0	2	0	0	0	0	0	6
15:45	0	1	0	0	1	0	**1**	0	0	**1**	0	1	0	0	1	**5**	0	1	0	**6**	9
16:00	**1**	0	2	0	3	0	0	0	0	0	1	**2**	0	0	**3**	4	0	0	0	4	**10**
Total Volume	1	2	6	0	9	0	1	0	0	1	4	4	0	0	8	11	0	2	0	13	31
% App. Total	11.1	22.2	66.7	0		0	100	0	0		50	50	0	0		84.6	0	15.4	0		
PHF	.250	.500	.500	.000	.563	.000	.250	.000	.000	.250	.500	.500	.000	.000	.667	.550	.000	.500	.000	.542	.775

GRAM Traffic Counting, inc.

3751 FM 1105, Bldg. A
Georgetown, TX 78626
512-832-8650

File Name : Site 2 - Lohman Ford Rd & Boggy Ford Rd - PM
Site Code : 2
Start Date : 11/15/2023
Page No : 6

	Lohman Ford Rd Southbound					Shoreline Ranch Rd Westbound					Lohman Ford Rd Northbound					Boggy Ford Rd Eastbound					
Start Time	Left	Thru	Right	U-TURN	App. Total	Left	Thru	Right	U-TURN	App. Total	Left	Thru	Right	U-TURN	App. Total	Left	Thru	Right	U-TURN	App. Total	Int. Total
Peak Hour Analysis From 14:00 to 18:45 - Peak 1 of 1																					
Peak Hour for Each Approach Begins at:																					
	15:15					14:00					15:15					15:15					
+0 mins.	0	0	1	0	1	0	0	0	0	0	1	1	0	0	2	2	0	**1**	0	3	
+15 mins.	0	**1**	**3**	0	**4**	0	0	0	0	0	**2**	0	0	0	2	0	0	0	0	0	
+30 mins.	0	1	0	0	1	0	0	0	0	0	0	1	0	0	1	**5**	0	1	0	**6**	
+45 mins.	**1**	0	2	0	3	0	0	**1**	0	**1**	1	**2**	0	0	**3**	4	0	0	0	4	
Total Volume	1	2	6	0	9	0	0	1	0	1	4	4	0	0	8	11	0	2	0	13	
% App. Total	11.1	22.2	66.7	0		0	0	100	0		50	50	0	0		84.6	0	15.4	0		
PHF	.250	.500	.500	.000	.563	.000	.000	.250	.000	.250	.500	.500	.000	.000	.667	.550	.000	.500	.000	.542	

GRAM Traffic Counting, inc.

3751 FM 1105, Bldg. A
Georgetown, TX 78626
512-832-8650

File Name : Site 2 - Lohman Ford Rd & Boggy Ford Rd - PM
Site Code : 2
Start Date : 11/15/2023
Page No : 7

Groups Printed- Pedestrians

	Lohman Ford Rd Southbound					Shoreline Ranch Rd Westbound					Lohman Ford Rd Northbound					Boggy Ford Rd Eastbound					
Start Time	Left	Thru	Right	U-TURN	App. Total	Left	Thru	Right	U-TURN	App. Total	Left	Thru	Right	U-TURN	App. Total	Left	Thru	Right	U-TURN	App. Total	Int. Total
14:00	0	0	0	0	0	0	0	0	0	0	0	0	0	0	0	0	0	0	0	0	0
14:15	0	0	0	0	0	0	0	0	0	0	0	0	0	0	0	0	0	0	0	0	0
14:30	0	0	0	0	0	0	0	0	0	0	0	0	0	0	0	0	0	0	0	0	0
14:45	0	0	0	0	0	0	0	0	0	0	0	0	0	0	0	0	0	0	0	0	0
Total	0	0	0	0	0	0	0	0	0	0	0	0	0	0	0	0	0	0	0	0	0
15:00	0	0	0	0	0	0	0	0	0	0	0	0	0	0	0	0	0	0	0	0	0
15:15	0	0	0	0	0	0	0	0	0	0	0	0	0	0	0	0	0	0	0	0	0
15:30	0	0	0	0	0	0	0	0	0	0	0	0	0	0	0	0	0	0	0	0	0
15:45	0	0	0	0	0	0	0	0	0	0	0	0	0	0	0	0	0	0	0	0	0
Total	0	0	0	0	0	0	0	0	0	0	0	0	0	0	0	0	0	0	0	0	0
16:00	0	0	0	0	0	0	0	0	0	0	0	0	0	0	0	0	0	0	0	0	0
16:15	0	0	0	0	0	0	0	0	0	0	0	0	0	0	0	0	0	0	0	0	0
16:30	0	0	0	0	0	0	0	0	0	0	0	0	0	0	0	0	0	0	0	0	0
16:45	0	0	0	0	0	0	0	0	0	0	0	0	0	0	0	0	0	0	0	0	0
Total	0	0	0	0	0	0	0	0	0	0	0	0	0	0	0	0	0	0	0	0	0
17:00	0	0	0	0	0	0	0	0	0	0	0	0	0	0	0	0	0	0	0	0	0
17:15	0	0	0	0	0	0	0	0	0	0	0	0	0	0	0	0	0	0	0	0	0
17:30	0	0	0	0	0	0	0	0	0	0	0	0	0	0	0	0	0	0	0	0	0
17:45	0	0	0	0	0	0	0	0	0	0	0	0	0	0	0	0	0	0	0	0	0
Total	0	0	0	0	0	0	0	0	0	0	0	0	0	0	0	0	0	0	0	0	0
18:00	0	0	0	0	0	0	0	0	0	0	0	0	0	0	0	0	0	0	0	0	0
18:15	0	0	0	0	0	0	0	0	0	0	0	0	0	0	0	0	0	0	0	0	0
18:30	0	0	0	0	0	0	0	0	0	0	0	0	0	0	0	0	0	0	0	0	0
18:45	0	0	0	0	0	0	0	0	0	0	0	0	0	0	0	0	0	0	0	0	0
Total	0	0	0	0	0	0	0	0	0	0	0	0	0	0	0	0	0	0	0	0	0
Grand Total	0	0	0	0	0	0	0	0	0	0	0	0	0	0	0	0	0	0	0	0	0
Apprch %	0	0	0	0		0	0	0	0		0	0	0	0		0	0	0	0		
Total %																					

	Lohman Ford Rd Southbound					Shoreline Ranch Rd Westbound					Lohman Ford Rd Northbound					Boggy Ford Rd Eastbound					
Start Time	Left	Thru	Right	U-TURN	App. Total	Left	Thru	Right	U-TURN	App. Total	Left	Thru	Right	U-TURN	App. Total	Left	Thru	Right	U-TURN	App. Total	Int. Total
Peak Hour Analysis From 14:00 to 18:45 - Peak 1 of 1																					
Peak Hour for Entire Intersection Begins at 14:00																					
14:00	0	0	0	0	0	0	0	0	0	0	0	0	0	0	0	0	0	0	0	0	0
14:15	0	0	0	0	0	0	0	0	0	0	0	0	0	0	0	0	0	0	0	0	0
14:30	0	0	0	0	0	0	0	0	0	0	0	0	0	0	0	0	0	0	0	0	0
14:45	0	0	0	0	0	0	0	0	0	0	0	0	0	0	0	0	0	0	0	0	0
Total Volume	0	0	0	0	0	0	0	0	0	0	0	0	0	0	0	0	0	0	0	0	0
% App. Total	0	0	0	0		0	0	0	0		0	0	0	0		0	0	0	0		
PHF	.000	.000	.000	.000	.000	.000	.000	.000	.000	.000	.000	.000	.000	.000	.000	.000	.000	.000	.000	.000	.000

GRAM Traffic Counting, inc.

3751 FM 1105, Bldg. A
Georgetown, TX 78626
512-832-8650

File Name : Site 2 - Lohman Ford Rd & Boggy Ford Rd - PM
Site Code : 2
Start Date : 11/15/2023
Page No : 8

	Lohman Ford Rd Southbound					Shoreline Ranch Rd Westbound					Lohman Ford Rd Northbound					Boggy Ford Rd Eastbound					
Start Time	Left	Thru	Right	U-TURN	App. Total	Left	Thru	Right	U-TURN	App. Total	Left	Thru	Right	U-TURN	App. Total	Left	Thru	Right	U-TURN	App. Total	Int. Total
Peak Hour Analysis From 14:00 to 18:45 - Peak 1 of 1																					
Peak Hour for Each Approach Begins at:																					
	14:00					14:00					14:00					14:00					
+0 mins.	0	0	0	0	0	0	0	0	0	0	0	0	0	0	0	0	0	0	0	0	
+15 mins.	0	0	0	0	0	0	0	0	0	0	0	0	0	0	0	0	0	0	0	0	
+30 mins.	0	0	0	0	0	0	0	0	0	0	0	0	0	0	0	0	0	0	0	0	
+45 mins.	0	0	0	0	0	0	0	0	0	0	0	0	0	0	0	0	0	0	0	0	
Total Volume	0	0	0	0	0	0	0	0	0	0	0	0	0	0	0	0	0	0	0	0	
% App. Total	0	0	0	0		0	0	0	0		0	0	0	0		0	0	0	0		
PHF	.000	.000	.000	.000	.000	.000	.000	.000	.000	.000	.000	.000	.000	.000	.000	.000	.000	.000	.000	.000	

GRAM Traffic Counting, inc.

3751 FM 1105, Bldg. A
Georgetown, TX 78626
512-832-8650

File Name : Site 3 - Boggy Ford Rd & National Dr - AM
Site Code : 3
Start Date : 11/15/2023
Page No : 1

Groups Printed- Vehicles - Heavy Vehicles

	National Dr Southbound					Boggy Ford Rd Westbound					National Dr Northbound					Boggy Ford Rd Eastbound					
Start Time	Left	Thru	Right	U-TURN	App. Total	Left	Thru	Right	U-TURN	App. Total	Left	Thru	Right	U-TURN	App. Total	Left	Thru	Right	U-TURN	App. Total	Int. Total
07:00	10	0	1	0	11	0	13	3	0	16	0	2	1	0	3	3	73	0	0	76	106
07:15	10	1	3	0	14	0	21	3	0	24	0	4	0	0	4	3	85	0	0	88	130
07:30	9	3	1	0	13	0	40	9	0	49	0	2	1	0	3	5	73	0	0	78	143
07:45	14	1	3	0	18	0	43	14	0	57	0	5	0	0	5	3	66	0	0	69	149
Total	43	5	8	0	56	0	117	29	0	146	0	13	2	0	15	14	297	0	0	311	528
08:00	9	0	1	0	10	0	18	7	0	25	1	1	0	0	2	3	76	0	0	79	116
08:15	12	6	1	0	19	0	43	4	0	47	0	3	0	0	3	5	76	0	0	81	150
08:30	8	3	0	0	11	1	48	4	0	53	1	2	0	0	3	1	64	0	0	65	132
08:45	6	0	5	0	11	0	29	3	0	32	1	1	0	0	2	2	56	0	0	58	103
Total	35	9	7	0	51	1	138	18	0	157	3	7	0	0	10	11	272	0	0	283	501
Grand Total	78	14	15	0	107	1	255	47	0	303	3	20	2	0	25	25	569	0	0	594	1029
Apprch %	72.9	13.1	14	0		0.3	84.2	15.5	0		12	80	8	0		4.2	95.8	0	0		
Total %	7.6	1.4	1.5	0	10.4	0.1	24.8	4.6	0	29.4	0.3	1.9	0.2	0	2.4	2.4	55.3	0	0	57.7	
Vehicles	78	14	15	0	107	1	252	45	0	298	3	19	2	0	24	23	567	0	0	590	1019
% Vehicles	100	100	100	0	100	100	98.8	95.7	0	98.3	100	95	100	0	96	92	99.6	0	0	99.3	99
Heavy Vehicles	0	0	0	0	0	0	3	2	0	5	0	1	0	0	1	2	2	0	0	4	10
% Heavy Vehicles	0	0	0	0	0	0	1.2	4.3	0	1.7	0	5	0	0	4	8	0.4	0	0	0.7	1

	National Dr Southbound					Boggy Ford Rd Westbound					National Dr Northbound					Boggy Ford Rd Eastbound					
Start Time	Left	Thru	Right	U-TURN	App. Total	Left	Thru	Right	U-TURN	App. Total	Left	Thru	Right	U-TURN	App. Total	Left	Thru	Right	U-TURN	App. Total	Int. Total
Peak Hour Analysis From 07:00 to 08:45 - Peak 1 of 1																					
Peak Hour for Entire Intersection Begins at 07:30																					
07:30	9	3	1	0	13	0	40	9	0	49	0	2	**1**	0	3	**5**	73	0	0	78	143
07:45	**14**	1	**3**	0	18	0	**43**	**14**	0	**57**	0	**5**	0	0	**5**	3	66	0	0	69	149
08:00	9	0	1	0	10	0	18	7	0	25	**1**	1	0	0	2	3	**76**	0	0	79	116
08:15	12	**6**	1	0	**19**	0	43	4	0	47	0	3	0	0	3	5	76	0	0	**81**	**150**
Total Volume	44	10	6	0	60	0	144	34	0	178	1	11	1	0	13	16	291	0	0	307	558
% App. Total	73.3	16.7	10	0		0	80.9	19.1	0		7.7	84.6	7.7	0		5.2	94.8	0	0		
PHF	.786	.417	.500	.000	.789	.000	.837	.607	.000	.781	.250	.550	.250	.000	.650	.800	.957	.000	.000	.948	.930
Vehicles	44	10	6	0	60	0	143	32	0	175	1	11	1	0	13	15	290	0	0	305	553
% Vehicles	100	100	100	0	100	0	99.3	94.1	0	98.3	100	100	100	0	100	93.8	99.7	0	0	99.3	99.1
Heavy Vehicles	0	0	0	0	0	0	1	2	0	3	0	0	0	0	0	1	1	0	0	2	5
% Heavy Vehicles	0	0	0	0	0	0	0.7	5.9	0	1.7	0	0	0	0	0	6.3	0.3	0	0	0.7	0.9

GRAM Traffic Counting, inc.

3751 FM 1105, Bldg. A
Georgetown, TX 78626
512-832-8650

File Name : Site 3 - Boggy Ford Rd & National Dr - AM
Site Code : 3
Start Date : 11/15/2023
Page No : 2

	National Dr Southbound					Boggy Ford Rd Westbound					National Dr Northbound					Boggy Ford Rd Eastbound					
Start Time	Left	Thru	Right	U-TURN	App. Total	Left	Thru	Right	U-TURN	App. Total	Left	Thru	Right	U-TURN	App. Total	Left	Thru	Right	U-TURN	App. Total	Int. Total
Peak Hour Analysis From 07:00 to 08:45 - Peak 1 of 1																					
Peak Hour for Each Approach Begins at:																					
	07:30					07:45					07:00					07:15					
+0 mins.	9	3	1	0	13	0	43	**14**	0	**57**	0	2	**1**	0	3	3	**85**	0	0	**88**	
+15 mins.	**14**	1	**3**	0	18	0	18	7	0	25	0	4	0	0	4	**5**	73	0	0	78	
+30 mins.	9	0	1	0	10	0	43	4	0	47	0	2	1	0	3	3	66	0	0	69	
+45 mins.	12	**6**	1	0	**19**	**1**	**48**	4	0	53	0	**5**	0	0	**5**	3	76	0	0	79	
Total Volume	44	10	6	0	60	1	152	29	0	182	0	13	2	0	15	14	300	0	0	314	
% App. Total	73.3	16.7	10	0		0.5	83.5	15.9	0		0	86.7	13.3	0		4.5	95.5	0	0		
PHF	.786	.417	.500	.000	.789	.250	.792	.518	.000	.798	.000	.650	.500	.000	.750	.700	.882	.000	.000	.892	
Vehicles	44	10	6	0	60	1	151	29	0	181	0	13	2	0	15	12	300	0	0	312	
% Vehicles	100	100	100	0	100	100	99.3	100	0	99.5	0	100	100	0	100	85.7	100	0	0	99.4	
Heavy Vehicles	0	0	0	0	0	0	1	0	0	1	0	0	0	0	0	2	0	0	0	2	
% Heavy Vehicles	0	0	0	0	0	0	0.7	0	0	0.5	0	0	0	0	0	14.3	0	0	0	0.6	

GRAM Traffic Counting, inc.

3751 FM 1105, Bldg. A
Georgetown, TX 78626
512-832-8650

File Name : Site 3 - Boggy Ford Rd & National Dr - AM
Site Code : 3
Start Date : 11/15/2023
Page No : 3

Groups Printed- Vehicles

	National Dr Southbound					Boggy Ford Rd Westbound					National Dr Northbound					Boggy Ford Rd Eastbound					
Start Time	Left	Thru	Right	U-TURN	App. Total	Left	Thru	Right	U-TURN	App. Total	Left	Thru	Right	U-TURN	App. Total	Left	Thru	Right	U-TURN	App. Total	Int. Total
07:00	10	0	1	0	11	0	13	3	0	16	0	2	1	0	3	3	73	0	0	76	106
07:15	10	1	3	0	14	0	20	3	0	23	0	4	0	0	4	2	85	0	0	87	128
07:30	9	3	1	0	13	0	39	7	0	46	0	2	1	0	3	4	73	0	0	77	139
07:45	14	1	3	0	18	0	43	14	0	57	0	5	0	0	5	3	66	0	0	69	149
Total	43	5	8	0	56	0	115	27	0	142	0	13	2	0	15	12	297	0	0	309	522
08:00	9	0	1	0	10	0	18	7	0	25	1	1	0	0	2	3	76	0	0	79	116
08:15	12	6	1	0	19	0	43	4	0	47	0	3	0	0	3	5	75	0	0	80	149
08:30	8	3	0	0	11	1	47	4	0	52	1	1	0	0	2	1	63	0	0	64	129
08:45	6	0	5	0	11	0	29	3	0	32	1	1	0	0	2	2	56	0	0	58	103
Total	35	9	7	0	51	1	137	18	0	156	3	6	0	0	9	11	270	0	0	281	497
Grand Total	78	14	15	0	107	1	252	45	0	298	3	19	2	0	24	23	567	0	0	590	1019
Apprch %	72.9	13.1	14	0		0.3	84.6	15.1	0		12.5	79.2	8.3	0		3.9	96.1	0	0		
Total %	7.7	1.4	1.5	0	10.5	0.1	24.7	4.4	0	29.2	0.3	1.9	0.2	0	2.4	2.3	55.6	0	0	57.9	

	National Dr Southbound					Boggy Ford Rd Westbound					National Dr Northbound					Boggy Ford Rd Eastbound					
Start Time	Left	Thru	Right	U-TURN	App. Total	Left	Thru	Right	U-TURN	App. Total	Left	Thru	Right	U-TURN	App. Total	Left	Thru	Right	U-TURN	App. Total	Int. Total
Peak Hour Analysis From 07:00 to 08:45 - Peak 1 of 1																					
Peak Hour for Entire Intersection Begins at 07:30																					
07:30	9	3	1	0	13	0	39	7	0	46	0	2	**1**	0	3	4	73	0	0	77	139
07:45	**14**	1	**3**	0	18	0	**43**	**14**	0	**57**	0	**5**	0	0	**5**	3	66	0	0	69	**149**
08:00	9	0	1	0	10	0	18	7	0	25	**1**	1	0	0	2	3	**76**	0	0	79	116
08:15	12	**6**	1	0	**19**	0	43	4	0	47	0	3	0	0	3	**5**	75	0	0	**80**	149
Total Volume	44	10	6	0	60	0	143	32	0	175	1	11	1	0	13	15	290	0	0	305	553
% App. Total	73.3	16.7	10	0		0	81.7	18.3	0		7.7	84.6	7.7	0		4.9	95.1	0	0		
PHF	.786	.417	.500	.000	.789	.000	.831	.571	.000	.768	.250	.550	.250	.000	.650	.750	.954	.000	.000	.953	.928

Peak Hour Analysis From 07:00 to 08:45 - Peak 1 of 1
Peak Hour for Each Approach Begins at:

	07:30					07:45					07:00					07:15				
+0 mins.	9	3	1	0	13	0	43	**14**	0	**57**	0	2	**1**	0	3	2	**85**	0	0	**87**
+15 mins.	**14**	1	**3**	0	18	0	18	7	0	25	0	4	0	0	4	**4**	73	0	0	77
+30 mins.	9	0	1	0	10	0	43	4	0	47	0	2	1	0	3	3	66	0	0	69
+45 mins.	12	**6**	1	0	**19**	**1**	**47**	4	0	52	0	**5**	0	0	**5**	3	76	0	0	79
Total Volume	44	10	6	0	60	1	151	29	0	181	0	13	2	0	15	12	300	0	0	312
% App. Total	73.3	16.7	10	0		0.6	83.4	16	0		0	86.7	13.3	0		3.8	96.2	0	0	
PHF	.786	.417	.500	.000	.789	.250	.803	.518	.000	.794	.000	.650	.500	.000	.750	.750	.882	.000	.000	.897

GRAM Traffic Counting, inc.

3751 FM 1105, Bldg. A
Georgetown, TX 78626
512-832-8650

File Name : Site 3 - Boggy Ford Rd & National Dr - AM
Site Code : 3
Start Date : 11/15/2023
Page No : 4

Groups Printed- Heavy Vehicles

	National Dr Southbound					Boggy Ford Rd Westbound					National Dr Northbound					Boggy Ford Rd Eastbound					
Start Time	Left	Thru	Right	U-TURN	App. Total	Left	Thru	Right	U-TURN	App. Total	Left	Thru	Right	U-TURN	App. Total	Left	Thru	Right	U-TURN	App. Total	Int. Total
07:00	0	0	0	0	0	0	0	0	0	0	0	0	0	0	0	0	0	0	0	0	0
07:15	0	0	0	0	0	0	1	0	0	1	0	0	0	0	0	1	0	0	0	1	2
07:30	0	0	0	0	0	0	1	2	0	3	0	0	0	0	0	1	0	0	0	1	4
07:45	0	0	0	0	0	0	0	0	0	0	0	0	0	0	0	0	0	0	0	0	0
Total	0	0	0	0	0	0	2	2	0	4	0	0	0	0	0	2	0	0	0	2	6
08:00	0	0	0	0	0	0	0	0	0	0	0	0	0	0	0	0	0	0	0	0	0
08:15	0	0	0	0	0	0	0	0	0	0	0	0	0	0	0	0	1	0	0	1	1
08:30	0	0	0	0	0	0	1	0	0	1	0	1	0	0	1	0	1	0	0	1	3
08:45	0	0	0	0	0	0	0	0	0	0	0	0	0	0	0	0	0	0	0	0	0
Total	0	0	0	0	0	0	1	0	0	1	0	1	0	0	1	0	2	0	0	2	4
Grand Total	0	0	0	0	0	0	3	2	0	5	0	1	0	0	1	2	2	0	0	4	10
Apprch %	0	0	0	0		0	60	40	0		0	100	0	0		50	50	0	0		
Total %	0	0	0	0	0	0	30	20	0	50	0	10	0	0	10	20	20	0	0	40	

	National Dr Southbound					Boggy Ford Rd Westbound					National Dr Northbound					Boggy Ford Rd Eastbound					
Start Time	Left	Thru	Right	U-TURN	App. Total	Left	Thru	Right	U-TURN	App. Total	Left	Thru	Right	U-TURN	App. Total	Left	Thru	Right	U-TURN	App. Total	Int. Total
Peak Hour Analysis From 07:00 to 08:45 - Peak 1 of 1																					
Peak Hour for Entire Intersection Begins at 07:00																					
07:00	0	0	0	0	0	0	0	0	0	0	0	0	0	0	0	0	0	0	0	0	0
07:15	0	0	0	0	0	0	**1**	0	0	1	0	0	0	0	0	**1**	0	0	0	**1**	2
07:30	0	0	0	0	0	0	1	**2**	0	**3**	0	0	0	0	0	1	0	0	0	1	**4**
07:45	0	0	0	0	0	0	0	0	0	0	0	0	0	0	0	0	0	0	0	0	0
Total Volume	0	0	0	0	0	0	2	2	0	4	0	0	0	0	0	2	0	0	0	2	6
% App. Total	0	0	0	0		0	50	50	0		0	0	0	0		100	0	0	0		
PHF	.000	.000	.000	.000	.000	.000	.500	.250	.000	.333	.000	.000	.000	.000	.000	.500	.000	.000	.000	.500	.375

Peak Hour Analysis From 07:00 to 08:45 - Peak 1 of 1
Peak Hour for Each Approach Begins at:

	07:00					07:00					07:45					07:00				
+0 mins.	0	0	0	0	0	0	0	0	0	0	0	0	0	0	0	0	0	0	0	0
+15 mins.	0	0	0	0	0	0	**1**	0	0	1	0	0	0	0	0	**1**	0	0	0	**1**
+30 mins.	0	0	0	0	0	0	1	**2**	0	**3**	0	0	0	0	0	1	0	0	0	1
+45 mins.	0	0	0	0	0	0	0	0	0	0	0	**1**	0	0	**1**	0	0	0	0	0
Total Volume	0	0	0	0	0	0	2	2	0	4	0	1	0	0	1	2	0	0	0	2
% App. Total	0	0	0	0		0	50	50	0		0	100	0	0		100	0	0	0	
PHF	.000	.000	.000	.000	.000	.000	.500	.250	.000	.333	.000	.250	.000	.000	.250	.500	.000	.000	.000	.500

GRAM Traffic Counting, inc.

3751 FM 1105, Bldg. A
Georgetown, TX 78626
512-832-8650

File Name : Site 3 - Boggy Ford Rd & National Dr - AM
Site Code : 3
Start Date : 11/15/2023
Page No : 5

Groups Printed- Pedestrians

	National Dr Southbound					Boggy Ford Rd Westbound					National Dr Northbound					Boggy Ford Rd Eastbound					
Start Time	Left	Thru	Right	U-TURN	App. Total	Left	Thru	Right	U-TURN	App. Total	Left	Thru	Right	U-TURN	App. Total	Left	Thru	Right	U-TURN	App. Total	Int. Total
07:00	0	0	0	0	0	0	0	0	0	0	0	0	0	0	0	0	0	0	0	0	0
07:15	0	0	0	0	0	0	0	0	0	0	0	0	0	0	0	0	0	0	0	0	0
07:30	0	0	0	0	0	0	0	0	0	0	0	0	0	0	0	0	0	0	0	0	0
07:45	0	0	0	0	0	0	0	0	0	0	0	0	0	0	0	0	0	0	0	0	0
Total	0	0	0	0	0	0	0	0	0	0	0	0	0	0	0	0	0	0	0	0	0
08:00	0	0	0	0	0	0	0	0	0	0	0	0	0	0	0	0	0	0	0	0	0
08:15	0	0	0	0	0	0	0	0	0	0	0	0	0	0	0	0	0	0	0	0	0
08:30	0	0	0	0	0	0	0	0	0	0	0	0	0	0	0	0	2	0	0	2	2
08:45	0	0	0	0	0	0	0	0	0	0	0	0	0	0	0	0	0	0	0	0	0
Total	0	0	0	0	0	0	0	0	0	0	0	0	0	0	0	0	2	0	0	2	2
Grand Total	0	0	0	0	0	0	0	0	0	0	0	0	0	0	0	0	2	0	0	2	2
Apprch %	0	0	0	0		0	0	0	0		0	0	0	0		0	100	0	0		
Total %	0	0	0	0	0	0	0	0	0	0	0	0	0	0	0	0	100	0	0	100	

	National Dr Southbound					Boggy Ford Rd Westbound					National Dr Northbound					Boggy Ford Rd Eastbound					
Start Time	Left	Thru	Right	U-TURN	App. Total	Left	Thru	Right	U-TURN	App. Total	Left	Thru	Right	U-TURN	App. Total	Left	Thru	Right	U-TURN	App. Total	Int. Total
Peak Hour Analysis From 07:00 to 08:45 - Peak 1 of 1																					
Peak Hour for Entire Intersection Begins at 07:45																					
07:45	0	0	0	0	0	0	0	0	0	0	0	0	0	0	0	0	0	0	0	0	0
08:00	0	0	0	0	0	0	0	0	0	0	0	0	0	0	0	0	0	0	0	0	0
08:15	0	0	0	0	0	0	0	0	0	0	0	0	0	0	0	0	0	0	0	0	0
08:30	0	0	0	0	0	0	0	0	0	0	0	0	0	0	0	0	**2**	0	0	**2**	**2**
Total Volume	0	0	0	0	0	0	0	0	0	0	0	0	0	0	0	0	2	0	0	2	2
% App. Total	0	0	0	0		0	0	0	0		0	0	0	0		0	100	0	0		
PHF	.000	.000	.000	.000	.000	.000	.000	.000	.000	.000	.000	.000	.000	.000	.000	.000	.250	.000	.000	.250	.250

Peak Hour Analysis From 07:00 to 08:45 - Peak 1 of 1
Peak Hour for Each Approach Begins at:

	07:00					07:00					07:00					07:45				
+0 mins.	0	0	0	0	0	0	0	0	0	0	0	0	0	0	0	0	0	0	0	0
+15 mins.	0	0	0	0	0	0	0	0	0	0	0	0	0	0	0	0	0	0	0	0
+30 mins.	0	0	0	0	0	0	0	0	0	0	0	0	0	0	0	0	0	0	0	0
+45 mins.	0	0	0	0	0	0	0	0	0	0	0	0	0	0	0	0	**2**	0	0	**2**
Total Volume	0	0	0	0	0	0	0	0	0	0	0	0	0	0	0	0	2	0	0	2
% App. Total	0	0	0	0		0	0	0	0		0	0	0	0		0	100	0	0	
PHF	.000	.000	.000	.000	.000	.000	.000	.000	.000	.000	.000	.000	.000	.000	.000	.000	.250	.000	.000	.250

GRAM Traffic Counting, inc.

3751 FM 1105, Bldg. A
Georgetown, TX 78626
512-832-8650

File Name : Site 3 - Boggy Ford Rd & National Dr - PM
Site Code : 3
Start Date : 11/15/2023
Page No : 1

Groups Printed- Vehicles - Heavy Vehicles

	National Dr Southbound					Boggy Ford Rd Westbound					National Dr Northbound					Boggy Ford Rd Eastbound					
Start Time	Left	Thru	Right	U-TURN	App. Total	Left	Thru	Right	U-TURN	App. Total	Left	Thru	Right	U-TURN	App. Total	Left	Thru	Right	U-TURN	App. Total	Int. Total
14:00	3	2	3	0	8	0	47	3	0	50	0	0	0	0	0	2	53	1	0	56	114
14:15	4	3	1	0	8	0	56	6	0	62	0	2	0	0	2	3	29	0	0	32	104
14:30	2	3	4	0	9	0	48	7	0	55	0	2	0	0	2	2	38	0	0	40	106
14:45	7	1	1	0	9	0	39	5	0	44	0	4	1	0	5	5	44	1	0	50	108
Total	16	9	9	0	34	0	190	21	0	211	0	8	1	0	9	12	164	2	0	178	432
15:00	7	1	4	0	12	1	42	3	0	46	0	3	0	0	3	1	38	1	0	40	101
15:15	7	5	1	0	13	0	68	8	0	76	0	4	0	0	4	2	38	0	0	40	133
15:30	8	6	1	0	15	0	93	13	0	106	1	2	0	0	3	2	28	1	0	31	155
15:45	6	4	0	0	10	0	62	11	0	73	1	3	0	0	4	4	53	0	0	57	144
Total	28	16	6	0	50	1	265	35	0	301	2	12	0	0	14	9	157	2	0	168	533
16:00	8	1	1	0	10	0	59	8	0	67	0	1	0	0	1	2	65	0	0	67	145
16:15	3	4	0	0	7	0	100	15	0	115	1	0	1	0	2	2	49	2	0	53	177
16:30	4	3	3	0	10	0	95	12	0	107	0	3	0	0	3	1	52	0	0	53	173
16:45	4	2	3	0	9	0	87	8	0	95	0	2	0	0	2	1	43	1	0	45	151
Total	19	10	7	0	36	0	341	43	0	384	1	6	1	0	8	6	209	3	0	218	646
17:00	3	2	3	0	8	0	84	9	0	93	0	1	0	0	1	2	40	0	0	42	144
17:15	6	2	1	0	9	0	65	7	0	72	1	2	0	0	3	2	65	1	0	68	152
17:30	6	6	1	0	13	0	76	5	0	81	0	1	0	0	1	0	59	0	0	59	154
17:45	9	3	1	0	13	0	77	7	0	84	0	4	1	0	5	0	54	0	0	54	156
Total	24	13	6	0	43	0	302	28	0	330	1	8	1	0	10	4	218	1	0	223	606
18:00	6	2	1	0	9	0	82	10	0	92	0	4	0	0	4	1	37	1	0	39	144
18:15	7	1	4	0	12	0	56	3	0	59	1	3	0	0	4	1	37	0	0	38	113
18:30	3	2	2	0	7	0	57	11	0	68	1	0	0	0	1	0	32	1	0	33	109
18:45	3	2	0	0	5	0	59	7	0	66	0	2	0	0	2	1	24	0	0	25	98
Total	19	7	7	0	33	0	254	31	0	285	2	9	0	0	11	3	130	2	0	135	464
Grand Total	106	55	35	0	196	1	1352	158	0	1511	6	43	3	0	52	34	878	10	0	922	2681
Apprch %	54.1	28.1	17.9	0		0.1	89.5	10.5	0		11.5	82.7	5.8	0		3.7	95.2	1.1	0		
Total %	4	2.1	1.3	0	7.3	0	50.4	5.9	0	56.4	0.2	1.6	0.1	0	1.9	1.3	32.7	0.4	0	34.4	
Vehicles	105	55	34	0	194	1	1331	152	0	1484	6	43	3	0	52	33	869	10	0	912	2642
% Vehicles	99.1	100	97.1	0	99	100	98.4	96.2	0	98.2	100	100	100	0	100	97.1	99	100	0	98.9	98.5
Heavy Vehicles	1	0	1	0	2	0	21	6	0	27	0	0	0	0	0	1	9	0	0	10	39
% Heavy Vehicles	0.9	0	2.9	0	1	0	1.6	3.8	0	1.8	0	0	0	0	0	2.9	1	0	0	1.1	1.5

GRAM Traffic Counting, inc.

3751 FM 1105, Bldg. A
Georgetown, TX 78626
512-832-8650

File Name : Site 3 - Boggy Ford Rd & National Dr - PM
Site Code : 3
Start Date : 11/15/2023
Page No : 2

	National Dr Southbound					Boggy Ford Rd Westbound					National Dr Northbound					Boggy Ford Rd Eastbound					
Start Time	Left	Thru	Right	U-TURN	App. Total	Left	Thru	Right	U-TURN	App. Total	Left	Thru	Right	U-TURN	App. Total	Left	Thru	Right	U-TURN	App. Total	Int. Total
Peak Hour Analysis From 14:00 to 15:45 - Peak 1 of 1																					
Peak Hour for Entire Intersection Begins at 15:00																					
15:00	7	1	**4**	0	12	**1**	42	3	0	46	0	3	0	0	3	1	38	**1**	0	40	101
15:15	7	5	1	0	13	0	68	8	0	76	0	**4**	0	0	**4**	2	38	0	0	40	133
15:30	**8**	**6**	1	0	**15**	0	**93**	**13**	0	**106**	**1**	2	0	0	3	2	28	1	0	31	**155**
15:45	6	4	0	0	10	0	62	11	0	73	1	3	0	0	4	**4**	**53**	0	0	**57**	144
Total Volume	28	16	6	0	50	1	265	35	0	301	2	12	0	0	14	9	157	2	0	168	533
% App. Total	56	32	12	0		0.3	88	11.6	0		14.3	85.7	0	0		5.4	93.5	1.2	0		
PHF	.875	.667	.375	.000	.833	.250	.712	.673	.000	.710	.500	.750	.000	.000	.875	.563	.741	.500	.000	.737	.860
Vehicles	28	16	5	0	49	1	259	33	0	293	2	12	0	0	14	9	153	2	0	164	520
% Vehicles	100	100	83.3	0	98.0	100	97.7	94.3	0	97.3	100	100	0	0	100	100	97.5	100	0	97.6	97.6
Heavy Vehicles	0	0	1	0	1	0	6	2	0	8	0	0	0	0	0	0	4	0	0	4	13
% Heavy Vehicles	0	0	16.7	0	2.0	0	2.3	5.7	0	2.7	0	0	0	0	0	0	2.5	0	0	2.4	2.4

Peak Hour Analysis From 14:00 to 15:45 - Peak 1 of 1
Peak Hour for Each Approach Begins at:

	15:00					15:00					14:45					14:00				
+0 mins.	7	1	**4**	0	12	**1**	42	3	0	46	0	**4**	**1**	0	**5**	2	**53**	**1**	0	**56**
+15 mins.	7	5	1	0	13	0	68	8	0	76	0	3	0	0	3	3	29	0	0	32
+30 mins.	**8**	**6**	1	0	**15**	0	**93**	**13**	0	**106**	0	4	0	0	4	2	38	0	0	40
+45 mins.	6	4	0	0	10	0	62	11	0	73	**1**	2	0	0	3	**5**	44	1	0	50
Total Volume	28	16	6	0	50	1	265	35	0	301	1	13	1	0	15	12	164	2	0	178
% App. Total	56	32	12	0		0.3	88	11.6	0		6.7	86.7	6.7	0		6.7	92.1	1.1	0	
PHF	.875	.667	.375	.000	.833	.250	.712	.673	.000	.710	.250	.813	.250	.000	.750	.600	.774	.500	.000	.795
Vehicles	28	16	5	0	49	1	259	33	0	293	1	13	1	0	15	12	164	2	0	178
% Vehicles	100	100	83.3	0	98	100	97.7	94.3	0	97.3	100	100	100	0	100	100	100	100	0	100
Heavy Vehicles	0	0	1	0	1	0	6	2	0	8	0	0	0	0	0	0	0	0	0	0
% Heavy Vehicles	0	0	16.7	0	2	0	2.3	5.7	0	2.7	0	0	0	0	0	0	0	0	0	0

GRAM Traffic Counting, inc.

3751 FM 1105, Bldg. A
Georgetown, TX 78626
512-832-8650

File Name : Site 3 - Boggy Ford Rd & National Dr - PM
Site Code : 3
Start Date : 11/15/2023
Page No : 3

Groups Printed- Vehicles

	National Dr Southbound					Boggy Ford Rd Westbound					National Dr Northbound					Boggy Ford Rd Eastbound					
Start Time	Left	Thru	Right	U-TURN	App. Total	Left	Thru	Right	U-TURN	App. Total	Left	Thru	Right	U-TURN	App. Total	Left	Thru	Right	U-TURN	App. Total	Int. Total
14:00	3	2	3	0	8	0	46	3	0	49	0	0	0	0	0	2	53	1	0	56	113
14:15	3	3	1	0	7	0	54	6	0	60	0	2	0	0	2	3	29	0	0	32	101
14:30	2	3	4	0	9	0	48	7	0	55	0	2	0	0	2	2	38	0	0	40	106
14:45	7	1	1	0	9	0	38	5	0	43	0	4	1	0	5	5	44	1	0	50	107
Total	15	9	9	0	33	0	186	21	0	207	0	8	1	0	9	12	164	2	0	178	427
15:00	7	1	4	0	12	1	41	3	0	45	0	3	0	0	3	1	38	1	0	40	100
15:15	7	5	0	0	12	0	67	8	0	75	0	4	0	0	4	2	37	0	0	39	130
15:30	8	6	1	0	15	0	89	13	0	102	1	2	0	0	3	2	28	1	0	31	151
15:45	6	4	0	0	10	0	62	9	0	71	1	3	0	0	4	4	50	0	0	54	139
Total	28	16	5	0	49	1	259	33	0	293	2	12	0	0	14	9	153	2	0	164	520
16:00	8	1	1	0	10	0	57	8	0	65	0	1	0	0	1	2	64	0	0	66	142
16:15	3	4	0	0	7	0	98	14	0	112	1	0	1	0	2	1	49	2	0	52	173
16:30	4	3	3	0	10	0	95	12	0	107	0	3	0	0	3	1	51	0	0	52	172
16:45	4	2	3	0	9	0	86	8	0	94	0	2	0	0	2	1	43	1	0	45	150
Total	19	10	7	0	36	0	336	42	0	378	1	6	1	0	8	5	207	3	0	215	637
17:00	3	2	3	0	8	0	83	7	0	90	0	1	0	0	1	2	40	0	0	42	141
17:15	6	2	1	0	9	0	65	6	0	71	1	2	0	0	3	2	65	1	0	68	151
17:30	6	6	1	0	13	0	74	5	0	79	0	1	0	0	1	0	59	0	0	59	152
17:45	9	3	1	0	13	0	76	7	0	83	0	4	1	0	5	0	53	0	0	53	154
Total	24	13	6	0	43	0	298	25	0	323	1	8	1	0	10	4	217	1	0	222	598
18:00	6	2	1	0	9	0	81	10	0	91	0	4	0	0	4	1	36	1	0	38	142
18:15	7	1	4	0	12	0	56	3	0	59	1	3	0	0	4	1	36	0	0	37	112
18:30	3	2	2	0	7	0	57	11	0	68	1	0	0	0	1	0	32	1	0	33	109
18:45	3	2	0	0	5	0	58	7	0	65	0	2	0	0	2	1	24	0	0	25	97
Total	19	7	7	0	33	0	252	31	0	283	2	9	0	0	11	3	128	2	0	133	460
Grand Total	105	55	34	0	194	1	1331	152	0	1484	6	43	3	0	52	33	869	10	0	912	2642
Apprch %	54.1	28.4	17.5	0		0.1	89.7	10.2	0		11.5	82.7	5.8	0		3.6	95.3	1.1	0		
Total %	4	2.1	1.3	0	7.3	0	50.4	5.8	0	56.2	0.2	1.6	0.1	0	2	1.2	32.9	0.4	0	34.5	

	National Dr Southbound					Boggy Ford Rd Westbound					National Dr Northbound					Boggy Ford Rd Eastbound					
Start Time	Left	Thru	Right	U-TURN	App. Total	Left	Thru	Right	U-TURN	App. Total	Left	Thru	Right	U-TURN	App. Total	Left	Thru	Right	U-TURN	App. Total	Int. Total
Peak Hour Analysis From 14:00 to 15:45 - Peak 1 of 1																					
Peak Hour for Entire Intersection Begins at 15:00																					
15:00	7	1	**4**	0	12	**1**	41	3	0	45	0	3	0	0	3	1	38	**1**	0	40	100
15:15	7	5	0	0	12	0	67	8	0	75	0	**4**	0	0	**4**	2	37	0	0	39	130
15:30	**8**	**6**	1	0	**15**	0	**89**	**13**	0	**102**	**1**	2	0	0	3	2	28	1	0	31	**151**
15:45	6	4	0	0	10	0	62	9	0	71	1	3	0	0	4	**4**	**50**	0	0	**54**	139
Total Volume	28	16	5	0	49	1	259	33	0	293	2	12	0	0	14	9	153	2	0	164	520
% App. Total	57.1	32.7	10.2	0		0.3	88.4	11.3	0		14.3	85.7	0	0		5.5	93.3	1.2	0		
PHF	.875	.667	.313	.000	.817	.250	.728	.635	.000	.718	.500	.750	.000	.000	.875	.563	.765	.500	.000	.759	.861

APPENDIX C. Site-Traffic Distribution & Assignments

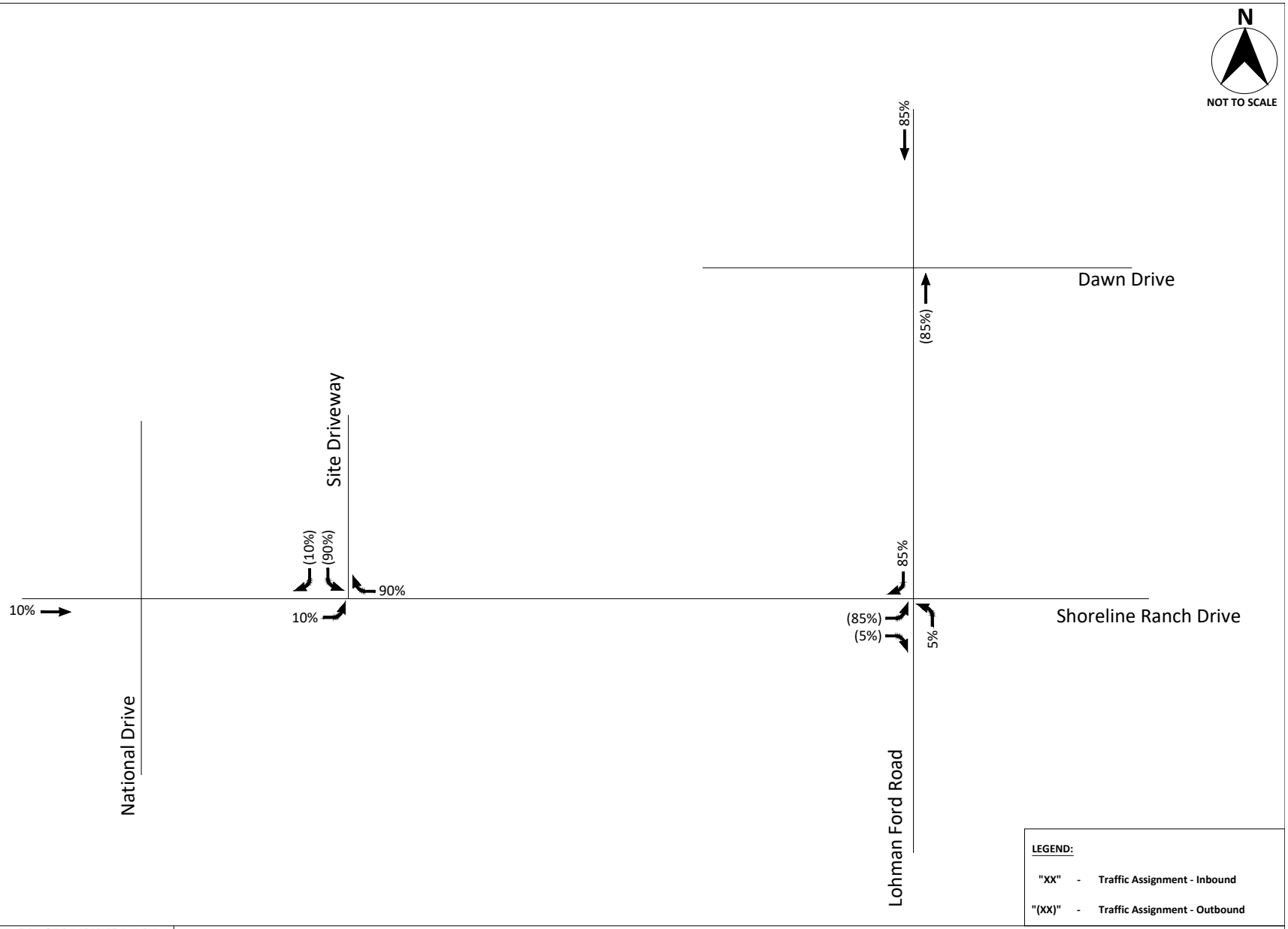

PROMET ENGINEERS
TRANSPORTATION ENGINEERING & PLANNING
TBPE Firm Registration No.: F-25044
Phone 469-640-7708 Web www.prometengineers.com
9550 Forest Lane, Suite 342, Dallas, Texas 75243

EXHIBIT: C1

TITLE: Traffic Assignment

DATE: April 20, 2025

TRAFFIC IMPACT ANALYSIS UPDATE FOR 19708 BOGGY FORD ROAD DEVELOPMENT, LAGO VISTA, TEXAS

APPENDIX D. Synchro Reports

HCM 6th Signalized Intersection Summary
1: Lohman Ford & Dawn Drive

2025 Existing
Timing Plan: AM

Movement	EBL	EBT	EBR	WBL	WBT	WBR	NBL	NBT	NBR	SBL	SBT	SBR
Lane Configurations												
Traffic Volume (veh/h)	306	11	51	17	6	35	20	635	15	15	406	140
Future Volume (veh/h)	306	11	51	17	6	35	20	635	15	15	406	140
Initial Q (Qb), veh	0	0	0	0	0	0	0	0	0	0	0	0
Ped-Bike Adj(A_pbT)	1.00		1.00	1.00		1.00	1.00		1.00	1.00		1.00
Parking Bus, Adj	1.00	1.00	1.00	1.00	1.00	1.00	1.00	1.00	1.00	1.00	1.00	1.00
Work Zone On Approach		No			No			No			No	
Adj Sat Flow, veh/h/ln	1870	1767	1870	1811	1648	1870	1870	1856	1870	1870	1856	1841
Adj Flow Rate, veh/h	360	13	60	20	7	41	24	747	18	18	478	165
Peak Hour Factor	0.85	0.85	0.85	0.85	0.85	0.85	0.85	0.85	0.85	0.85	0.85	0.85
Percent Heavy Veh, %	2	9	2	6	17	2	2	3	2	2	3	4
Cap, veh/h	374	14	365	23	8	48	301	774	19	134	786	661
Arrive On Green	0.23	0.23	0.23	0.05	0.05	0.05	0.03	0.43	0.43	0.02	0.42	0.42
Sat Flow, veh/h	1627	59	1585	432	151	885	1781	1804	43	1781	1856	1560
Grp Volume(v), veh/h	373	0	60	68	0	0	24	0	765	18	478	165
Grp Sat Flow(s),veh/h/ln	1685	0	1585	1467	0	0	1781	0	1848	1781	1856	1560
Q Serve(g_s), s	19.7	0.0	2.7	4.1	0.0	0.0	0.7	0.0	36.3	0.5	18.0	6.1
Cycle Q Clear(g_c), s	19.7	0.0	2.7	4.1	0.0	0.0	0.7	0.0	36.3	0.5	18.0	6.1
Prop In Lane	0.97		1.00	0.29		0.60	1.00		0.02	1.00		1.00
Lane Grp Cap(c), veh/h	388	0	365	80	0	0	301	0	792	134	786	661
V/C Ratio(X)	0.96	0.00	0.16	0.85	0.00	0.00	0.08	0.00	0.97	0.13	0.61	0.25
Avail Cap(c_a), veh/h	388	0	365	80	0	0	355	0	792	197	786	661
HCM Platoon Ratio	1.00	1.00	1.00	1.00	1.00	1.00	1.00	1.00	1.00	1.00	1.00	1.00
Upstream Filter(I)	1.00	0.00	1.00	1.00	0.00	0.00	1.00	0.00	1.00	1.00	1.00	1.00
Uniform Delay (d), s/veh	34.3	0.0	27.7	42.2	0.0	0.0	15.7	0.0	25.1	21.4	20.1	16.7
Incr Delay (d2), s/veh	35.8	0.0	0.2	54.5	0.0	0.0	0.1	0.0	24.6	0.5	3.5	0.9
Initial Q Delay(d3),s/veh	0.0	0.0	0.0	0.0	0.0	0.0	0.0	0.0	0.0	0.0	0.0	0.0
%ile BackOfQ(50%),veh/ln	11.7	0.0	1.0	2.7	0.0	0.0	0.3	0.0	20.3	0.2	8.2	2.3
Unsig. Movement Delay, s/veh												
LnGrp Delay(d),s/veh	70.1	0.0	27.9	96.7	0.0	0.0	15.8	0.0	49.7	21.8	23.6	17.6
LnGrp LOS	E	A	C	F	A	A	B	A	D	C	C	B
Approach Vol, veh/h		433			68			789			661	
Approach Delay, s/veh		64.3			96.7			48.7			22.1	
Approach LOS		E			F			D			C	
Timer - Assigned Phs	1	2		4	5	6		8				
Phs Duration (G+Y+Rc), s	7.8	44.6		26.7	8.3	44.1		10.9				
Change Period (Y+Rc), s	6.0	6.0		6.0	6.0	6.0		6.0				
Max Green Setting (Gmax), s	5.0	35.9		20.7	5.0	35.9		4.9				
Max Q Clear Time (g_c+I1), s	2.5	38.3		21.7	2.7	20.0		6.1				
Green Ext Time (p_c), s	0.0	0.0		0.0	0.0	3.3		0.0				
Intersection Summary												
HCM 6th Ctrl Delay			44.8									
HCM 6th LOS			D									

Notes

User approved pedestrian interval to be less than phase max green.

HCM 6th Signalized Intersection Summary
2: Lohman Ford Road & Boggy Ford Rd/Shoreline Ranch Dr

2025 Existing
Timing Plan: AM

Movement	EBL	EBT	EBR	WBL	WBT	WBR	NBL	NBT	NBR	SBL	SBT	SBR
Lane Configurations												
Traffic Volume (veh/h)	457	3	14	1	1	12	17	202	2	17	107	199
Future Volume (veh/h)	457	3	14	1	1	12	17	202	2	17	107	199
Initial Q (Qb), veh	0	0	0	0	0	0	0	0	0	0	0	0
Ped-Bike Adj(A_pbT)	1.00		1.00	1.00		1.00	1.00		1.00	1.00		1.00
Parking Bus, Adj	1.00	1.00	1.00	1.00	1.00	1.00	1.00	1.00	1.00	1.00	1.00	1.00
Work Zone On Approach		No			No			No			No	
Adj Sat Flow, veh/h/ln	1870	1411	1870	1870	1870	1870	1870	1870	1870	1811	1856	1856
Adj Flow Rate, veh/h	486	3	15	1	1	13	18	215	2	18	114	212
Peak Hour Factor	0.94	0.94	0.94	0.94	0.94	0.94	0.94	0.94	0.94	0.94	0.94	0.94
Percent Heavy Veh, %	2	33	2	2	2	2	2	2	2	6	3	3
Cap, veh/h	686	3	16	540	500	797	109	354	3	123	343	322
Arrive On Green	0.50	0.50	0.50	0.50	0.50	0.50	0.20	0.20	0.20	0.20	0.20	0.20
Sat Flow, veh/h	1022	6	32	812	994	1585	69	1730	15	114	1679	1572
Grp Volume(v), veh/h	504	0	0	2	0	13	235	0	0	132	0	212
Grp Sat Flow(s),veh/h/ln	1060	0	0	1806	0	1585	1814	0	0	1793	0	1572
Q Serve(g_s), s	18.5	0.0	0.0	0.0	0.0	0.2	0.6	0.0	0.0	0.0	0.0	5.1
Cycle Q Clear(g_c), s	18.5	0.0	0.0	0.0	0.0	0.2	4.7	0.0	0.0	2.5	0.0	5.1
Prop In Lane	0.96		0.03	0.50		1.00	0.08		0.01	0.14		1.00
Lane Grp Cap(c), veh/h	705	0	0	1040	0	797	466	0	0	467	0	322
V/C Ratio(X)	0.71	0.00	0.00	0.00	0.00	0.02	0.50	0.00	0.00	0.28	0.00	0.66
Avail Cap(c_a), veh/h	715	0	0	1055	0	812	466	0	0	467	0	322
HCM Platoon Ratio	1.00	1.00	1.00	1.00	1.00	1.00	1.00	1.00	1.00	1.00	1.00	1.00
Upstream Filter(I)	1.00	0.00	0.00	1.00	0.00	1.00	1.00	0.00	0.00	1.00	0.00	1.00
Uniform Delay (d), s/veh	9.7	0.0	0.0	5.1	0.0	5.1	14.8	0.0	0.0	14.0	0.0	15.0
Incr Delay (d2), s/veh	3.3	0.0	0.0	0.0	0.0	0.0	3.9	0.0	0.0	1.5	0.0	10.1
Initial Q Delay(d3),s/veh	0.0	0.0	0.0	0.0	0.0	0.0	0.0	0.0	0.0	0.0	0.0	0.0
%ile BackOfQ(50%),veh/ln	3.3	0.0	0.0	0.0	0.0	0.0	2.2	0.0	0.0	1.1	0.0	2.4
Unsig. Movement Delay, s/veh												
LnGrp Delay(d),s/veh	13.0	0.0	0.0	5.1	0.0	5.1	18.7	0.0	0.0	15.5	0.0	25.1
LnGrp LOS	B	A	A	A	A	A	B	A	A	B	A	C
Approach Vol, veh/h		504			15			235			344	
Approach Delay, s/veh		13.0			5.1			18.7			21.4	
Approach LOS		B			A			B			C	
Timer - Assigned Phs		2		4		6		8				
Phs Duration (G+Y+Rc), s		14.4		26.6		14.4		26.6				
Change Period (Y+Rc), s		6.0		6.0		6.0		6.0				
Max Green Setting (Gmax), s		8.0		21.0		8.0		21.0				
Max Q Clear Time (g_c+I1), s		6.7		20.5		7.1		2.2				
Green Ext Time (p_c), s		0.2		0.2		0.2		0.0				
Intersection Summary												
HCM 6th Ctrl Delay			16.8									
HCM 6th LOS			B									

Notes

User approved pedestrian interval to be less than phase max green.

HCM 6th TWSC
3: National Drive & Boggy Ford Road

2025 Existing
Timing Plan: AM

Intersection	
Int Delay, s/veh	2.1

Movement	EBL	EBT	EBR	WBL	WBT	WBR	NBL	NBT	NBR	SBL	SBT	SBR
Lane Configurations												
Traffic Vol, veh/h	17	303	0	0	150	35	1	11	1	46	10	6
Future Vol, veh/h	17	303	0	0	150	35	1	11	1	46	10	6
Conflicting Peds, #/hr	0	0	0	0	0	0	0	0	0	0	0	0
Sign Control	Free	Free	Free	Free	Free	Free	Stop	Stop	Stop	Stop	Stop	Stop
RT Channelized	-	-	None	-	-	None	-	-	None	-	-	None
Storage Length	-	-	-	-	-	-	-	-	-	-	-	-
Veh in Median Storage, #	-	0	-	-	0	-	-	0	-	-	0	-
Grade, %	-	0	-	-	0	-	-	0	-	-	0	-
Peak Hour Factor	92	92	92	92	92	92	92	92	92	92	92	92
Heavy Vehicles, %	6	2	2	2	2	6	2	2	2	2	2	2
Mvmt Flow	18	329	0	0	163	38	1	12	1	50	11	7

Major/Minor	Major1			Major2			Minor1			Minor2		
Conflicting Flow All	201	0	0	329	0	0	556	566	329	554	547	182
Stage 1	-	-	-	-	-	-	365	365	-	182	182	-
Stage 2	-	-	-	-	-	-	191	201	-	372	365	-
Critical Hdwy	4.16	-	-	4.12	-	-	7.12	6.52	6.22	7.12	6.52	6.22
Critical Hdwy Stg 1	-	-	-	-	-	-	6.12	5.52	-	6.12	5.52	-
Critical Hdwy Stg 2	-	-	-	-	-	-	6.12	5.52	-	6.12	5.52	-
Follow-up Hdwy	2.254	-	-	2.218	-	-	3.518	4.018	3.318	3.518	4.018	3.318
Pot Cap-1 Maneuver	1347	-	-	1231	-	-	442	434	712	443	445	861
Stage 1	-	-	-	-	-	-	654	623	-	820	749	-
Stage 2	-	-	-	-	-	-	811	735	-	648	623	-
Platoon blocked, %		-	-		-	-						
Mov Cap-1 Maneuver	1347	-	-	1231	-	-	425	427	712	427	438	861
Mov Cap-2 Maneuver	-	-	-	-	-	-	425	427	-	427	438	-
Stage 1	-	-	-	-	-	-	644	613	-	807	749	-
Stage 2	-	-	-	-	-	-	793	735	-	624	613	-

Approach	EB	WB	NB	SB
HCM Control Delay, s	0.4	0	13.5	14.4
HCM LOS			B	B

Minor Lane/Major Mvmt	NBLn1	EBL	EBT	EBR	WBL	WBT	WBR	SBLn1
Capacity (veh/h)	440	1347	-	-	1231	-	-	451
HCM Lane V/C Ratio	0.032	0.014	-	-	-	-	-	0.149
HCM Control Delay (s)	13.5	7.7	0	-	0	-	-	14.4
HCM Lane LOS	B	A	A	-	A	-	-	B
HCM 95th %tile Q(veh)	0.1	0	-	-	0	-	-	0.5

HCM 6th Signalized Intersection Summary
1: Lohman Ford & Dawn Drive

2025 Existing
Timing Plan: PM

Movement	EBL	EBT	EBR	WBL	WBT	WBR	NBL	NBT	NBR	SBL	SBT	SBR
Lane Configurations												
Traffic Volume (veh/h)	257	11	51	8	11	25	26	355	12	15	406	140
Future Volume (veh/h)	257	11	51	8	11	25	26	355	12	15	406	140
Initial Q (Qb), veh	0	0	0	0	0	0	0	0	0	0	0	0
Ped-Bike Adj(A_pbT)	1.00		1.00	1.00		1.00	1.00		1.00	1.00		1.00
Parking Bus, Adj	1.00	1.00	1.00	1.00	1.00	1.00	1.00	1.00	1.00	1.00	1.00	1.00
Work Zone On Approach		No			No			No			No	
Adj Sat Flow, veh/h/ln	1870	1796	1752	1870	1767	1841	1870	1870	1870	1841	1870	1856
Adj Flow Rate, veh/h	302	13	60	9	13	29	31	418	14	18	478	165
Peak Hour Factor	0.85	0.85	0.85	0.85	0.85	0.85	0.85	0.85	0.85	0.85	0.85	0.85
Percent Heavy Veh, %	2	7	10	2	9	4	2	2	2	4	2	3
Cap, veh/h	348	15	315	11	16	35	299	770	26	351	786	661
Arrive On Green	0.21	0.21	0.21	0.04	0.04	0.04	0.02	0.43	0.43	0.01	0.42	0.42
Sat Flow, veh/h	1643	71	1485	281	405	904	1781	1799	60	1753	1870	1572
Grp Volume(v), veh/h	315	0	60	51	0	0	31	0	432	18	478	165
Grp Sat Flow(s),veh/h/ln	1714	0	1485	1590	0	0	1781	0	1860	1753	1870	1572
Q Serve(g_s), s	13.7	0.0	2.6	2.5	0.0	0.0	0.8	0.0	13.3	0.5	15.3	5.2
Cycle Q Clear(g_c), s	13.7	0.0	2.6	2.5	0.0	0.0	0.8	0.0	13.3	0.5	15.3	5.2
Prop In Lane	0.96		1.00	0.18		0.57	1.00		0.03	1.00		1.00
Lane Grp Cap(c), veh/h	363	0	315	61	0	0	299	0	795	351	786	661
V/C Ratio(X)	0.87	0.00	0.19	0.84	0.00	0.00	0.10	0.00	0.54	0.05	0.61	0.25
Avail Cap(c_a), veh/h	423	0	366	83	0	0	330	0	795	388	786	661
HCM Platoon Ratio	1.00	1.00	1.00	1.00	1.00	1.00	1.00	1.00	1.00	1.00	1.00	1.00
Upstream Filter(I)	1.00	0.00	1.00	1.00	0.00	0.00	1.00	0.00	1.00	1.00	1.00	1.00
Uniform Delay (d), s/veh	29.3	0.0	24.9	36.8	0.0	0.0	14.0	0.0	16.4	13.7	17.4	14.4
Incr Delay (d2), s/veh	15.4	0.0	0.3	39.1	0.0	0.0	0.2	0.0	2.7	0.1	3.5	0.9
Initial Q Delay(d3),s/veh	0.0	0.0	0.0	0.0	0.0	0.0	0.0	0.0	0.0	0.0	0.0	0.0
%ile BackOfQ(50%),veh/ln	6.9	0.0	0.9	1.6	0.0	0.0	0.3	0.0	5.8	0.2	6.9	1.9
Unsig. Movement Delay, s/veh												
LnGrp Delay(d),s/veh	44.7	0.0	25.2	75.9	0.0	0.0	14.1	0.0	19.1	13.8	20.8	15.3
LnGrp LOS	D	A	C	E	A	A	B	A	B	B	C	B
Approach Vol, veh/h		375			51			463			661	
Approach Delay, s/veh		41.5			75.9			18.8			19.3	
Approach LOS		D			E			B			B	
Timer - Assigned Phs	1	2		4	5	6		8				
Phs Duration (G+Y+Rc), s	6.8	38.9		22.3	7.3	38.4		9.0				
Change Period (Y+Rc), s	6.0	6.0		6.0	6.0	6.0		6.0				
Max Green Setting (Gmax), s	2.4	27.6		19.0	2.7	27.3		4.0				
Max Q Clear Time (g_c+I1), s	2.5	15.3		15.7	2.8	17.3		4.5				
Green Ext Time (p_c), s	0.0	2.1		0.7	0.0	2.6		0.0				
Intersection Summary												
HCM 6th Ctrl Delay			26.4									
HCM 6th LOS			C									

Notes

User approved pedestrian interval to be less than phase max green.

HCM 6th Signalized Intersection Summary
2: Lohman Ford Road & Boggy Ford Rd/Shoreline Ranch Dr

2025 Existing
Timing Plan: PM

Movement	EBL	EBT	EBR	WBL	WBT	WBR	NBL	NBT	NBR	SBL	SBT	SBR
Lane Configurations												
Traffic Volume (veh/h)	303	3	23	0	5	20	23	144	2	15	191	469
Future Volume (veh/h)	303	3	23	0	5	20	23	144	2	15	191	469
Initial Q (Qb), veh	0	0	0	0	0	0	0	0	0	0	0	0
Ped-Bike Adj(A_pbT)	1.00		1.00	1.00		1.00	1.00		1.00	1.00		1.00
Parking Bus, Adj	1.00	1.00	1.00	1.00	1.00	1.00	1.00	1.00	1.00	1.00	1.00	1.00
Work Zone On Approach		No			No			No			No	
Adj Sat Flow, veh/h/ln	1870	1870	1841	1870	1870	1826	1767	1856	1870	1796	1870	1870
Adj Flow Rate, veh/h	329	3	25	0	5	22	25	157	2	16	208	510
Peak Hour Factor	0.92	0.92	0.92	0.92	0.92	0.92	0.92	0.92	0.92	0.92	0.92	0.92
Percent Heavy Veh, %	2	2	4	2	2	5	9	3	2	7	2	2
Cap, veh/h	650	10	38	0	732	605	123	552	6	100	625	551
Arrive On Green	0.39	0.39	0.39	0.00	0.39	0.39	0.35	0.35	0.35	0.35	0.35	0.35
Sat Flow, veh/h	1278	27	98	0	1870	1547	97	1586	18	48	1798	1585
Grp Volume(v), veh/h	357	0	0	0	5	22	184	0	0	224	0	510
Grp Sat Flow(s),veh/h/ln	1403	0	0	0	1870	1547	1702	0	0	1845	0	1585
Q Serve(g_s), s	9.4	0.0	0.0	0.0	0.1	0.4	0.0	0.0	0.0	0.0	0.0	14.2
Cycle Q Clear(g_c), s	9.5	0.0	0.0	0.0	0.1	0.4	3.3	0.0	0.0	4.1	0.0	14.2
Prop In Lane	0.92		0.07	0.00		1.00	0.14		0.01	0.07		1.00
Lane Grp Cap(c), veh/h	699	0	0	0	732	605	681	0	0	726	0	551
V/C Ratio(X)	0.51	0.00	0.00	0.00	0.01	0.04	0.27	0.00	0.00	0.31	0.00	0.93
Avail Cap(c_a), veh/h	699	0	0	0	732	605	681	0	0	726	0	551
HCM Platoon Ratio	1.00	1.00	1.00	1.00	1.00	1.00	1.00	1.00	1.00	1.00	1.00	1.00
Upstream Filter(I)	1.00	0.00	0.00	0.00	1.00	1.00	1.00	0.00	0.00	1.00	0.00	1.00
Uniform Delay (d), s/veh	11.4	0.0	0.0	0.0	8.5	8.6	10.9	0.0	0.0	11.1	0.0	14.4
Incr Delay (d2), s/veh	2.7	0.0	0.0	0.0	0.0	0.1	1.0	0.0	0.0	1.1	0.0	23.7
Initial Q Delay(d3),s/veh	0.0	0.0	0.0	0.0	0.0	0.0	0.0	0.0	0.0	0.0	0.0	0.0
%ile BackOfQ(50%),veh/ln	2.8	0.0	0.0	0.0	0.0	0.1	1.3	0.0	0.0	1.6	0.0	7.7
Unsig. Movement Delay, s/veh												
LnGrp Delay(d),s/veh	14.1	0.0	0.0	0.0	8.6	8.8	11.8	0.0	0.0	12.2	0.0	38.1
LnGrp LOS	B	A	A	A	A	A	B	A	A	B	A	D
Approach Vol, veh/h		357			27			184			734	
Approach Delay, s/veh		14.1			8.7			11.8			30.2	
Approach LOS		B			A			B			C	
Timer - Assigned Phs		2		4		6		8				
Phs Duration (G+Y+Rc), s		22.0		24.0		22.0		24.0				
Change Period (Y+Rc), s		6.0		6.0		6.0		6.0				
Max Green Setting (Gmax), s		16.0		18.0		16.0		18.0				
Max Q Clear Time (g_c+I1), s		5.3		11.5		16.2		2.4				
Green Ext Time (p_c), s		0.7		1.1		0.0		0.0				
Intersection Summary												
HCM 6th Ctrl Delay			22.7									
HCM 6th LOS			C									

Notes

User approved pedestrian interval to be less than phase max green.

Intersection	
Int Delay, s/veh	1.8

Movement	EBL	EBT	EBR	WBL	WBT	WBR	NBL	NBT	NBR	SBL	SBT	SBR
Lane Configurations												
Traffic Vol, veh/h	9	163	2	1	276	36	2	12	0	29	17	6
Future Vol, veh/h	9	163	2	1	276	36	2	12	0	29	17	6
Conflicting Peds, #/hr	0	0	0	0	0	0	0	0	0	0	0	0
Sign Control	Free	Free	Free	Free	Free	Free	Stop	Stop	Stop	Stop	Stop	Stop
RT Channelized	-	-	None	-	-	None	-	-	None	-	-	None
Storage Length	-	-	-	-	-	-	-	-	-	-	-	-
Veh in Median Storage, #	-	0	-	-	0	-	-	0	-	-	0	-
Grade, %	-	0	-	-	0	-	-	0	-	-	0	-
Peak Hour Factor	86	86	86	86	86	86	86	86	86	86	86	86
Heavy Vehicles, %	2	2	2	2	2	6	2	2	2	2	2	17
Mvmt Flow	10	190	2	1	321	42	2	14	0	34	20	7

Major/Minor	Major1			Major2			Minor1			Minor2		
Conflicting Flow All	363	0	0	192	0	0	569	576	191	562	556	342
Stage 1	-	-	-	-	-	-	211	211	-	344	344	-
Stage 2	-	-	-	-	-	-	358	365	-	218	212	-
Critical Hdwy	4.12	-	-	4.12	-	-	7.12	6.52	6.22	7.12	6.52	6.37
Critical Hdwy Stg 1	-	-	-	-	-	-	6.12	5.52	-	6.12	5.52	-
Critical Hdwy Stg 2	-	-	-	-	-	-	6.12	5.52	-	6.12	5.52	-
Follow-up Hdwy	2.218	-	-	2.218	-	-	3.518	4.018	3.318	3.518	4.018	3.453
Pot Cap-1 Maneuver	1196	-	-	1381	-	-	433	428	851	438	439	668
Stage 1	-	-	-	-	-	-	791	728	-	671	637	-
Stage 2	-	-	-	-	-	-	660	623	-	784	727	-
Platoon blocked, %		-	-		-	-						
Mov Cap-1 Maneuver	1196	-	-	1381	-	-	410	424	851	424	435	668
Mov Cap-2 Maneuver	-	-	-	-	-	-	410	424	-	424	435	-
Stage 1	-	-	-	-	-	-	784	721	-	665	636	-
Stage 2	-	-	-	-	-	-	632	622	-	762	720	-

Approach	EB	WB	NB	SB
HCM Control Delay, s	0.4	0	13.9	14.3
HCM LOS			B	B

Minor Lane/Major Mvmt	NBLn1	EBL	EBT	EBR	WBL	WBT	WBR	SBLn1
Capacity (veh/h)	422	1196	-	-	1381	-	-	447
HCM Lane V/C Ratio	0.039	0.009	-	-	0.001	-	-	0.135
HCM Control Delay (s)	13.9	8	0	-	7.6	0	-	14.3
HCM Lane LOS	B	A	A	-	A	A	-	B
HCM 95th %tile Q(veh)	0.1	0	-	-	0	-	-	0.5

HCM 6th Signalized Intersection Summary
1: Lohman Ford & Dawn Drive

2026 No Build
Timing Plan: AM

Movement	EBL	EBT	EBR	WBL	WBT	WBR	NBL	NBT	NBR	SBL	SBT	SBR
Lane Configurations												
Traffic Volume (veh/h)	312	11	55	19	6	36	31	913	22	15	537	143
Future Volume (veh/h)	312	11	55	19	6	36	31	913	22	15	537	143
Initial Q (Qb), veh	0	0	0	0	0	0	0	0	0	0	0	0
Ped-Bike Adj(A_pbT)	1.00		1.00	1.00		1.00	1.00		1.00	1.00		1.00
Parking Bus, Adj	1.00	1.00	1.00	1.00	1.00	1.00	1.00	1.00	1.00	1.00	1.00	1.00
Work Zone On Approach		No			No			No			No	
Adj Sat Flow, veh/h/ln	1870	1767	1870	1811	1648	1870	1870	1856	1870	1870	1856	1841
Adj Flow Rate, veh/h	367	13	65	22	7	42	36	1074	26	18	632	168
Peak Hour Factor	0.85	0.85	0.85	0.85	0.85	0.85	0.85	0.85	0.85	0.85	0.85	0.85
Percent Heavy Veh, %	2	9	2	6	17	2	2	3	2	2	3	4
Cap, veh/h	303	11	295	22	7	43	289	920	22	105	924	777
Arrive On Green	0.19	0.19	0.19	0.05	0.05	0.05	0.03	0.51	0.51	0.02	0.50	0.50
Sat Flow, veh/h	1628	58	1585	455	145	869	1781	1804	44	1781	1856	1560
Grp Volume(v), veh/h	380	0	65	71	0	0	36	0	1100	18	632	168
Grp Sat Flow(s),veh/h/ln	1685	0	1585	1469	0	0	1781	0	1848	1781	1856	1560
Q Serve(g_s), s	19.0	0.0	3.5	4.9	0.0	0.0	1.0	0.0	52.0	0.5	26.4	6.2
Cycle Q Clear(g_c), s	19.0	0.0	3.5	4.9	0.0	0.0	1.0	0.0	52.0	0.5	26.4	6.2
Prop In Lane	0.97		1.00	0.31		0.59	1.00		0.02	1.00		1.00
Lane Grp Cap(c), veh/h	314	0	295	72	0	0	289	0	942	105	924	777
V/C Ratio(X)	1.21	0.00	0.22	0.99	0.00	0.00	0.12	0.00	1.17	0.17	0.68	0.22
Avail Cap(c_a), veh/h	314	0	295	72	0	0	320	0	942	158	924	777
HCM Platoon Ratio	1.00	1.00	1.00	1.00	1.00	1.00	1.00	1.00	1.00	1.00	1.00	1.00
Upstream Filter(I)	1.00	0.00	1.00	1.00	0.00	0.00	1.00	0.00	1.00	1.00	1.00	1.00
Uniform Delay (d), s/veh	41.5	0.0	35.2	48.5	0.0	0.0	15.1	0.0	25.0	24.6	19.5	14.4
Incr Delay (d2), s/veh	120.6	0.0	0.4	101.1	0.0	0.0	0.2	0.0	87.0	0.8	4.1	0.6
Initial Q Delay(d3),s/veh	0.0	0.0	0.0	0.0	0.0	0.0	0.0	0.0	0.0	0.0	0.0	0.0
%ile BackOfQ(50%),veh/ln	18.3	0.0	1.4	3.8	0.0	0.0	0.4	0.0	43.9	0.2	11.9	2.3
Unsig. Movement Delay, s/veh												
LnGrp Delay(d),s/veh	162.1	0.0	35.6	149.5	0.0	0.0	15.3	0.0	112.0	25.4	23.6	15.0
LnGrp LOS	F	A	D	F	A	A	B	A	F	C	C	B
Approach Vol, veh/h		445			71			1136			818	
Approach Delay, s/veh		143.6			149.5			109.0			21.9	
Approach LOS		F			F			F			C	

Timer - Assigned Phs	1	2		4	5	6		8				
Phs Duration (G+Y+Rc), s	8.0	58.0		25.0	9.2	56.8		11.0				
Change Period (Y+Rc), s	6.0	6.0		6.0	6.0	6.0		6.0				
Max Green Setting (Gmax), s	5.0	49.0		19.0	5.0	49.0		5.0				
Max Q Clear Time (g_c+I1), s	2.5	54.0		21.0	3.0	28.4		6.9				
Green Ext Time (p_c), s	0.0	0.0		0.0	0.0	5.0		0.0				

Intersection Summary												
HCM 6th Ctrl Delay			87.5									
HCM 6th LOS			F									

Notes

User approved pedestrian interval to be less than phase max green.

HCM 6th Signalized Intersection Summary
2: Lohman Ford Road & Boggy Ford Rd/Shoreline Ranch Dr

2026 No Build
Timing Plan: AM

Movement	EBL	EBT	EBR	WBL	WBT	WBR	NBL	NBT	NBR	SBL	SBT	SBR
Lane Configurations												
Traffic Volume (veh/h)	466	13	14	28	22	145	17	219	11	95	149	203
Future Volume (veh/h)	466	13	14	28	22	145	17	219	11	95	149	203
Initial Q (Qb), veh	0	0	0	0	0	0	0	0	0	0	0	0
Ped-Bike Adj(A_pbT)	1.00		1.00	1.00		1.00	1.00		1.00	1.00		1.00
Parking Bus, Adj	1.00	1.00	1.00	1.00	1.00	1.00	1.00	1.00	1.00	1.00	1.00	1.00
Work Zone On Approach		No			No			No			No	
Adj Sat Flow, veh/h/ln	1870	1411	1870	1870	1870	1870	1870	1870	1870	1811	1856	1856
Adj Flow Rate, veh/h	496	14	15	30	23	154	18	233	12	101	159	216
Peak Hour Factor	0.94	0.94	0.94	0.94	0.94	0.94	0.94	0.94	0.94	0.94	0.94	0.94
Percent Heavy Veh, %	2	33	2	2	2	2	2	2	2	6	3	3
Cap, veh/h	594	13	14	630	455	853	80	293	14	195	219	363
Arrive On Green	0.54	0.54	0.54	0.54	0.54	0.54	0.23	0.23	0.23	0.23	0.23	0.23
Sat Flow, veh/h	853	24	26	969	845	1585	26	1272	62	429	949	1572
Grp Volume(v), veh/h	525	0	0	53	0	154	263	0	0	260	0	216
Grp Sat Flow(s),veh/h/ln	903	0	0	1814	0	1585	1360	0	0	1378	0	1572
Q Serve(g_s), s	27.3	0.0	0.0	0.0	0.0	2.6	0.9	0.0	0.0	0.0	0.0	6.4
Cycle Q Clear(g_c), s	28.0	0.0	0.0	0.7	0.0	2.6	10.2	0.0	0.0	9.4	0.0	6.4
Prop In Lane	0.94		0.03	0.57		1.00	0.07		0.05	0.39		1.00
Lane Grp Cap(c), veh/h	621	0	0	1085	0	853	388	0	0	414	0	363
V/C Ratio(X)	0.85	0.00	0.00	0.05	0.00	0.18	0.68	0.00	0.00	0.63	0.00	0.60
Avail Cap(c_a), veh/h	621	0	0	1085	0	853	388	0	0	414	0	363
HCM Platoon Ratio	1.00	1.00	1.00	1.00	1.00	1.00	1.00	1.00	1.00	1.00	1.00	1.00
Upstream Filter(I)	1.00	0.00	0.00	1.00	0.00	1.00	1.00	0.00	0.00	1.00	0.00	1.00
Uniform Delay (d), s/veh	13.4	0.0	0.0	5.7	0.0	6.1	18.2	0.0	0.0	18.7	0.0	17.8
Incr Delay (d2), s/veh	13.3	0.0	0.0	0.1	0.0	0.5	9.2	0.0	0.0	7.0	0.0	7.0
Initial Q Delay(d3),s/veh	0.0	0.0	0.0	0.0	0.0	0.0	0.0	0.0	0.0	0.0	0.0	0.0
%ile BackOfQ(50%),veh/ln	7.1	0.0	0.0	0.2	0.0	0.8	3.5	0.0	0.0	3.4	0.0	2.8
Unsig. Movement Delay, s/veh												
LnGrp Delay(d),s/veh	26.7	0.0	0.0	5.8	0.0	6.6	27.4	0.0	0.0	25.7	0.0	24.9
LnGrp LOS	C	A	A	A	A	A	C	A	A	C	A	C
Approach Vol, veh/h		525			207			263			476	
Approach Delay, s/veh		26.7			6.4			27.4			25.3	
Approach LOS		C			A			C			C	

Timer - Assigned Phs		2		4		6		8				
Phs Duration (G+Y+Rc), s		18.0		34.0		18.0		34.0				
Change Period (Y+Rc), s		6.0		6.0		6.0		6.0				
Max Green Setting (Gmax), s		12.0		28.0		12.0		28.0				
Max Q Clear Time (g_c+I1), s		12.2		30.0		11.4		4.6				
Green Ext Time (p_c), s		0.0		0.0		0.2		0.8				

Intersection Summary												
HCM 6th Ctrl Delay			23.5									
HCM 6th LOS			C									

Notes

User approved pedestrian interval to be less than phase max green.

HCM 6th TWSC
3: National Drive & Boggy Ford Road

2026 No Build
Timing Plan: AM

Intersection	
Int Delay, s/veh	2

Movement	EBL	EBT	EBR	WBL	WBT	WBR	NBL	NBT	NBR	SBL	SBT	SBR
Lane Configurations												
Traffic Vol, veh/h	17	319	0	0	174	36	1	11	1	47	10	6
Future Vol, veh/h	17	319	0	0	174	36	1	11	1	47	10	6
Conflicting Peds, #/hr	0	0	0	0	0	0	0	0	0	0	0	0
Sign Control	Free	Free	Free	Free	Free	Free	Stop	Stop	Stop	Stop	Stop	Stop
RT Channelized	-	-	None	-	-	None	-	-	None	-	-	None
Storage Length	-	-	-	-	-	-	-	-	-	-	-	-
Veh in Median Storage, #	-	0	-	-	0	-	-	0	-	-	0	-
Grade, %	-	0	-	-	0	-	-	0	-	-	0	-
Peak Hour Factor	92	92	92	92	92	92	92	92	92	92	92	92
Heavy Vehicles, %	6	2	2	2	2	6	2	2	2	2	2	2
Mvmt Flow	18	347	0	0	189	39	1	12	1	51	11	7

Major/Minor	Major1			Major2			Minor1			Minor2		
Conflicting Flow All	228	0	0	347	0	0	601	611	347	599	592	209
Stage 1	-	-	-	-	-	-	383	383	-	209	209	-
Stage 2	-	-	-	-	-	-	218	228	-	390	383	-
Critical Hdwy	4.16	-	-	4.12	-	-	7.12	6.52	6.22	7.12	6.52	6.22
Critical Hdwy Stg 1	-	-	-	-	-	-	6.12	5.52	-	6.12	5.52	-
Critical Hdwy Stg 2	-	-	-	-	-	-	6.12	5.52	-	6.12	5.52	-
Follow-up Hdwy	2.254	-	-	2.218	-	-	3.518	4.018	3.318	3.518	4.018	3.318
Pot Cap-1 Maneuver	1317	-	-	1212	-	-	412	409	696	413	419	831
Stage 1	-	-	-	-	-	-	640	612	-	793	729	-
Stage 2	-	-	-	-	-	-	784	715	-	634	612	-
Platoon blocked, %		-	-		-	-						
Mov Cap-1 Maneuver	1317	-	-	1212	-	-	396	402	696	398	412	831
Mov Cap-2 Maneuver	-	-	-	-	-	-	396	402	-	398	412	-
Stage 1	-	-	-	-	-	-	629	602	-	780	729	-
Stage 2	-	-	-	-	-	-	766	715	-	610	602	-

Approach	EB	WB	NB	SB
HCM Control Delay, s	0.4	0	14	15.2
HCM LOS			B	C

Minor Lane/Major Mvmt	NBLn1	EBL	EBT	EBR	WBL	WBT	WBR	SBLn1
Capacity (veh/h)	415	1317	-	-	1212	-	-	421
HCM Lane V/C Ratio	0.034	0.014	-	-	-	-	-	0.163
HCM Control Delay (s)	14	7.8	0	-	0	-	-	15.2
HCM Lane LOS	B	A	A	-	A	-	-	C
HCM 95th %tile Q(veh)	0.1	0	-	-	0	-	-	0.6

HCM 6th Signalized Intersection Summary
1: Lohman Ford & Dawn Drive

2026 No Build
Timing Plan: PM

Movement	EBL	EBT	EBR	WBL	WBT	WBR	NBL	NBT	NBR	SBL	SBT	SBR
Lane Configurations												
Traffic Volume (veh/h)	262	15	56	16	11	26	34	584	17	26	890	245
Future Volume (veh/h)	262	15	56	16	11	26	34	584	17	26	890	245
Initial Q (Qb), veh	0	0	0	0	0	0	0	0	0	0	0	0
Ped-Bike Adj(A_pbT)	1.00		1.00	1.00		1.00	1.00		1.00	1.00		1.00
Parking Bus, Adj	1.00	1.00	1.00	1.00	1.00	1.00	1.00	1.00	1.00	1.00	1.00	1.00
Work Zone On Approach		No			No			No			No	
Adj Sat Flow, veh/h/ln	1870	1796	1752	1870	1767	1841	1870	1870	1870	1841	1870	1856
Adj Flow Rate, veh/h	308	18	66	19	13	31	40	687	20	31	1047	288
Peak Hour Factor	0.85	0.85	0.85	0.85	0.85	0.85	0.85	0.85	0.85	0.85	0.85	0.85
Percent Heavy Veh, %	2	7	10	2	9	4	2	2	2	4	2	3
Cap, veh/h	286	17	262	23	16	38	130	925	27	276	948	797
Arrive On Green	0.18	0.18	0.18	0.05	0.05	0.05	0.03	0.51	0.51	0.03	0.51	0.51
Sat Flow, veh/h	1621	95	1485	483	330	788	1781	1808	53	1753	1870	1572
Grp Volume(v), veh/h	326	0	66	63	0	0	40	0	707	31	1047	288
Grp Sat Flow(s),veh/h/ln	1715	0	1485	1601	0	0	1781	0	1861	1753	1870	1572
Q Serve(g_s), s	18.0	0.0	3.9	4.0	0.0	0.0	1.1	0.0	30.5	0.9	51.7	11.3
Cycle Q Clear(g_c), s	18.0	0.0	3.9	4.0	0.0	0.0	1.1	0.0	30.5	0.9	51.7	11.3
Prop In Lane	0.94		1.00	0.30		0.49	1.00		0.03	1.00		1.00
Lane Grp Cap(c), veh/h	303	0	262	77	0	0	130	0	952	276	948	797
V/C Ratio(X)	1.08	0.00	0.25	0.82	0.00	0.00	0.31	0.00	0.74	0.11	1.10	0.36
Avail Cap(c_a), veh/h	303	0	262	77	0	0	175	0	952	329	948	797
HCM Platoon Ratio	1.00	1.00	1.00	1.00	1.00	1.00	1.00	1.00	1.00	1.00	1.00	1.00
Upstream Filter(I)	1.00	0.00	1.00	1.00	0.00	0.00	1.00	0.00	1.00	1.00	1.00	1.00
Uniform Delay (d), s/veh	42.0	0.0	36.2	48.1	0.0	0.0	24.1	0.0	19.6	15.8	25.1	15.2
Incr Delay (d2), s/veh	73.7	0.0	0.5	47.9	0.0	0.0	1.3	0.0	5.2	0.2	62.1	1.3
Initial Q Delay(d3),s/veh	0.0	0.0	0.0	0.0	0.0	0.0	0.0	0.0	0.0	0.0	0.0	0.0
%ile BackOfQ(50%),veh/ln	13.7	0.0	1.4	2.6	0.0	0.0	0.5	0.0	13.9	0.3	37.7	4.2
Unsig. Movement Delay, s/veh												
LnGrp Delay(d),s/veh	115.7	0.0	36.7	96.0	0.0	0.0	25.5	0.0	24.8	16.0	87.2	16.4
LnGrp LOS	F	A	D	F	A	A	C	A	C	B	F	B
Approach Vol, veh/h		392			63			747			1366	
Approach Delay, s/veh		102.4			96.0			24.9			70.7	
Approach LOS		F			F			C			E	

Timer - Assigned Phs	1	2		4	5	6		8
Phs Duration (G+Y+Rc), s	8.9	58.2		24.0	9.4	57.7		10.9
Change Period (Y+Rc), s	6.0	6.0		6.0	6.0	6.0		6.0
Max Green Setting (Gmax), s	6.0	49.1		18.0	6.0	49.1		4.9
Max Q Clear Time (g_c+I1), s	2.9	32.5		20.0	3.1	53.7		6.0
Green Ext Time (p_c), s	0.0	4.6		0.0	0.0	0.0		0.0

Intersection Summary		
HCM 6th Ctrl Delay		62.8
HCM 6th LOS		E

Notes

User approved pedestrian interval to be less than phase max green.

HCM 6th Signalized Intersection Summary
2: Lohman Ford Road & Boggy Ford Rd/Shoreline Ranch Dr

2026 No Build
Timing Plan: PM

Movement	EBL	EBT	EBR	WBL	WBT	WBR	NBL	NBT	NBR	SBL	SBT	SBR
Lane Configurations												
Traffic Volume (veh/h)	309	29	23	18	24	150	23	195	34	204	222	478
Future Volume (veh/h)	309	29	23	18	24	150	23	195	34	204	222	478
Initial Q (Qb), veh	0	0	0	0	0	0	0	0	0	0	0	0
Ped-Bike Adj(A_pbT)	1.00		1.00	1.00		1.00	1.00		1.00	1.00		1.00
Parking Bus, Adj	1.00	1.00	1.00	1.00	1.00	1.00	1.00	1.00	1.00	1.00	1.00	1.00
Work Zone On Approach		No			No			No			No	
Adj Sat Flow, veh/h/ln	1870	1870	1841	1870	1870	1826	1767	1856	1870	1796	1870	1870
Adj Flow Rate, veh/h	336	32	25	20	26	163	25	212	37	222	241	520
Peak Hour Factor	0.92	0.92	0.92	0.92	0.92	0.92	0.92	0.92	0.92	0.92	0.92	0.92
Percent Heavy Veh, %	2	2	4	2	2	5	9	3	2	7	2	2
Cap, veh/h	468	34	27	317	381	542	65	377	59	213	161	713
Arrive On Green	0.35	0.35	0.35	0.35	0.35	0.35	0.45	0.45	0.45	0.45	0.45	0.45
Sat Flow, veh/h	1019	97	76	659	1087	1547	0	838	131	276	357	1585
Grp Volume(v), veh/h	393	0	0	46	0	163	274	0	0	463	0	520
Grp Sat Flow(s),veh/h/ln	1192	0	0	1746	0	1547	969	0	0	633	0	1585
Q Serve(g_s), s	18.3	0.0	0.0	0.0	0.0	4.6	0.0	0.0	0.0	0.0	0.0	16.1
Cycle Q Clear(g_c), s	19.3	0.0	0.0	1.0	0.0	4.6	27.0	0.0	0.0	27.0	0.0	16.1
Prop In Lane	0.85		0.06	0.43		1.00	0.09		0.14	0.48		1.00
Lane Grp Cap(c), veh/h	529	0	0	697	0	542	502	0	0	373	0	713
V/C Ratio(X)	0.74	0.00	0.00	0.07	0.00	0.30	0.55	0.00	0.00	1.24	0.00	0.73
Avail Cap(c_a), veh/h	529	0	0	697	0	542	502	0	0	373	0	713
HCM Platoon Ratio	1.00	1.00	1.00	1.00	1.00	1.00	1.00	1.00	1.00	1.00	1.00	1.00
Upstream Filter(I)	1.00	0.00	0.00	1.00	0.00	1.00	1.00	0.00	0.00	1.00	0.00	1.00
Uniform Delay (d), s/veh	19.4	0.0	0.0	13.0	0.0	14.2	12.0	0.0	0.0	19.1	0.0	13.5
Incr Delay (d2), s/veh	5.6	0.0	0.0	0.0	0.0	0.3	4.2	0.0	0.0	128.8	0.0	6.4
Initial Q Delay(d3),s/veh	0.0	0.0	0.0	0.0	0.0	0.0	0.0	0.0	0.0	0.0	0.0	0.0
%ile BackOfQ(50%),veh/ln	5.5	0.0	0.0	0.4	0.0	1.5	2.6	0.0	0.0	18.5	0.0	6.1
Unsig. Movement Delay, s/veh												
LnGrp Delay(d),s/veh	25.1	0.0	0.0	13.0	0.0	14.5	16.2	0.0	0.0	147.9	0.0	20.0
LnGrp LOS	C	A	A	B	A	B	B	A	A	F	A	B
Approach Vol, veh/h		393			209			274			983	
Approach Delay, s/veh		25.1			14.2			16.2			80.2	
Approach LOS		C			B			B			F	

Timer - Assigned Phs		2		4		6		8
Phs Duration (G+Y+Rc), s		33.0		27.0		33.0		27.0
Change Period (Y+Rc), s		6.0		6.0		6.0		6.0
Max Green Setting (Gmax), s		27.0		21.0		27.0		21.0
Max Q Clear Time (g_c+I1), s		29.0		21.3		29.0		6.6
Green Ext Time (p_c), s		0.0		0.0		0.0		0.6

Intersection Summary		
HCM 6th Ctrl Delay		51.7
HCM 6th LOS		D

HCM 6th TWSC
3: National Drive & Boggy Ford Road

2026 No Build
Timing Plan: PM

Intersection	
Int Delay, s/veh	1.8

Movement	EBL	EBT	EBR	WBL	WBT	WBR	NBL	NBT	NBR	SBL	SBT	SBR
Lane Configurations												
Traffic Vol, veh/h	9	192	2	1	301	37	2	12	0	30	17	6
Future Vol, veh/h	9	192	2	1	301	37	2	12	0	30	17	6
Conflicting Peds, #/hr	0	0	0	0	0	0	0	0	0	0	0	0
Sign Control	Free	Free	Free	Free	Free	Free	Stop	Stop	Stop	Stop	Stop	Stop
RT Channelized	-	-	None	-	-	None	-	-	None	-	-	None
Storage Length	-	-	-	-	-	-	-	-	-	-	-	-
Veh in Median Storage, #	-	0	-	-	0	-	-	0	-	-	0	-
Grade, %	-	0	-	-	0	-	-	0	-	-	0	-
Peak Hour Factor	86	86	86	86	86	86	86	86	86	86	86	86
Heavy Vehicles, %	2	2	2	2	2	6	2	2	2	2	2	17
Mvmt Flow	10	223	2	1	350	43	2	14	0	35	20	7

Major/Minor	Major1			Major2			Minor1			Minor2		
Conflicting Flow All	393	0	0	225	0	0	631	639	224	625	619	372
Stage 1	-	-	-	-	-	-	244	244	-	374	374	-
Stage 2	-	-	-	-	-	-	387	395	-	251	245	-
Critical Hdwy	4.12	-	-	4.12	-	-	7.12	6.52	6.22	7.12	6.52	6.37
Critical Hdwy Stg 1	-	-	-	-	-	-	6.12	5.52	-	6.12	5.52	-
Critical Hdwy Stg 2	-	-	-	-	-	-	6.12	5.52	-	6.12	5.52	-
Follow-up Hdwy	2.218	-	-	2.218	-	-	3.518	4.018	3.318	3.518	4.018	3.453
Pot Cap-1 Maneuver	1166	-	-	1344	-	-	394	394	815	397	404	642
Stage 1	-	-	-	-	-	-	760	704	-	647	618	-
Stage 2	-	-	-	-	-	-	637	605	-	753	703	-
Platoon blocked, %		-	-		-	-						
Mov Cap-1 Maneuver	1166	-	-	1344	-	-	372	390	815	383	400	642
Mov Cap-2 Maneuver	-	-	-	-	-	-	372	390	-	383	400	-
Stage 1	-	-	-	-	-	-	752	697	-	641	617	-
Stage 2	-	-	-	-	-	-	609	604	-	731	696	-

Approach	EB	WB	NB	SB
HCM Control Delay, s	0.4	0	14.7	15.4
HCM LOS			B	C

Minor Lane/Major Mvmt	NBLn1	EBL	EBT	EBR	WBL	WBT	WBR	SBLn1
Capacity (veh/h)	387	1166	-	-	1344	-	-	407
HCM Lane V/C Ratio	0.042	0.009	-	-	0.001	-	-	0.151
HCM Control Delay (s)	14.7	8.1	0	-	7.7	0	-	15.4
HCM Lane LOS	B	A	A	-	A	A	-	C
HCM 95th %tile Q(veh)	0.1	0	-	-	0	-	-	0.5

HCM 6th Signalized Intersection Summary
1: Lohman Ford & Dawn Drive

2026 Build
Timing Plan: AM

Movement	EBL	EBT	EBR	WBL	WBT	WBR	NBL	NBT	NBR	SBL	SBT	SBR
Lane Configurations												
Traffic Volume (veh/h)	312	11	55	19	6	36	31	940	22	15	568	143
Future Volume (veh/h)	312	11	55	19	6	36	31	940	22	15	568	143
Initial Q (Qb), veh	0	0	0	0	0	0	0	0	0	0	0	0
Ped-Bike Adj(A_pbT)	1.00		1.00	1.00		1.00	1.00		1.00	1.00		1.00
Parking Bus, Adj	1.00	1.00	1.00	1.00	1.00	1.00	1.00	1.00	1.00	1.00	1.00	1.00
Work Zone On Approach		No			No			No			No	
Adj Sat Flow, veh/h/ln	1870	1767	1870	1811	1648	1870	1870	1856	1870	1870	1856	1841
Adj Flow Rate, veh/h	367	13	65	22	7	42	36	1106	26	18	668	168
Peak Hour Factor	0.85	0.85	0.85	0.85	0.85	0.85	0.85	0.85	0.85	0.85	0.85	0.85
Percent Heavy Veh, %	2	9	2	6	17	2	2	3	2	2	3	4
Cap, veh/h	303	11	295	22	7	43	268	920	22	105	924	777
Arrive On Green	0.19	0.19	0.19	0.05	0.05	0.05	0.03	0.51	0.51	0.02	0.50	0.50
Sat Flow, veh/h	1628	58	1585	455	145	869	1781	1805	42	1781	1856	1560
Grp Volume(v), veh/h	380	0	65	71	0	0	36	0	1132	18	668	168
Grp Sat Flow(s),veh/h/ln	1685	0	1585	1469	0	0	1781	0	1848	1781	1856	1560
Q Serve(g_s), s	19.0	0.0	3.5	4.9	0.0	0.0	1.0	0.0	52.0	0.5	28.8	6.2
Cycle Q Clear(g_c), s	19.0	0.0	3.5	4.9	0.0	0.0	1.0	0.0	52.0	0.5	28.8	6.2
Prop In Lane	0.97		1.00	0.31		0.59	1.00		0.02	1.00		1.00
Lane Grp Cap(c), veh/h	314	0	295	72	0	0	268	0	942	105	924	777
V/C Ratio(X)	1.21	0.00	0.22	0.99	0.00	0.00	0.13	0.00	1.20	0.17	0.72	0.22
Avail Cap(c_a), veh/h	314	0	295	72	0	0	300	0	942	158	924	777
HCM Platoon Ratio	1.00	1.00	1.00	1.00	1.00	1.00	1.00	1.00	1.00	1.00	1.00	1.00
Upstream Filter(I)	1.00	0.00	1.00	1.00	0.00	0.00	1.00	0.00	1.00	1.00	1.00	1.00
Uniform Delay (d), s/veh	41.5	0.0	35.2	48.5	0.0	0.0	15.8	0.0	25.0	24.6	20.1	14.4
Incr Delay (d2), s/veh	120.6	0.0	0.4	101.1	0.0	0.0	0.2	0.0	100.9	0.8	4.9	0.6
Initial Q Delay(d3),s/veh	0.0	0.0	0.0	0.0	0.0	0.0	0.0	0.0	0.0	0.0	0.0	0.0
%ile BackOfQ(50%),veh/ln	18.3	0.0	1.4	3.8	0.0	0.0	0.4	0.0	47.5	0.2	13.1	2.3
Unsig. Movement Delay, s/veh												
LnGrp Delay(d),s/veh	162.1	0.0	35.6	149.5	0.0	0.0	16.1	0.0	125.9	25.4	25.0	15.0
LnGrp LOS	F	A	D	F	A	A	B	A	F	C	C	B
Approach Vol, veh/h		445			71			1168			854	
Approach Delay, s/veh		143.6			149.5			122.5			23.0	
Approach LOS		F			F			F			C	

Timer - Assigned Phs	1	2		4	5	6		8				
Phs Duration (G+Y+Rc), s	8.0	58.0		25.0	9.2	56.8		11.0				
Change Period (Y+Rc), s	6.0	6.0		6.0	6.0	6.0		6.0				
Max Green Setting (Gmax), s	5.0	49.0		19.0	5.0	49.0		5.0				
Max Q Clear Time (g_c+I1), s	2.5	54.0		21.0	3.0	30.8		6.9				
Green Ext Time (p_c), s	0.0	0.0		0.0	0.0	5.1		0.0				

Intersection Summary												
HCM 6th Ctrl Delay			93.5									
HCM 6th LOS			F									

Notes

User approved pedestrian interval to be less than phase max green.

HCM 6th Signalized Intersection Summary
2: Lohman Ford Road & Boggy Ford Rd/Shoreline Ranch Dr

2026 Build
Timing Plan: AM

Movement	EBL	EBT	EBR	WBL	WBT	WBR	NBL	NBT	NBR	SBL	SBT	SBR
Lane Configurations												
Traffic Volume (veh/h)	493	13	16	28	22	145	19	219	11	95	149	234
Future Volume (veh/h)	493	13	16	28	22	145	19	219	11	95	149	234
Initial Q (Qb), veh	0	0	0	0	0	0	0	0	0	0	0	0
Ped-Bike Adj(A_pbT)	1.00		1.00	1.00		1.00	1.00		1.00	1.00		1.00
Parking Bus, Adj	1.00	1.00	1.00	1.00	1.00	1.00	1.00	1.00	1.00	1.00	1.00	1.00
Work Zone On Approach		No			No			No			No	
Adj Sat Flow, veh/h/ln	1870	1411	1870	1870	1870	1870	1870	1870	1870	1811	1856	1856
Adj Flow Rate, veh/h	524	14	17	30	23	154	20	233	12	101	159	249
Peak Hour Factor	0.94	0.94	0.94	0.94	0.94	0.94	0.94	0.94	0.94	0.94	0.94	0.94
Percent Heavy Veh, %	2	33	2	2	2	2	2	2	2	6	3	3
Cap, veh/h	576	12	14	610	440	823	89	402	20	222	272	393
Arrive On Green	0.52	0.52	0.52	0.52	0.52	0.52	0.25	0.25	0.25	0.25	0.25	0.25
Sat Flow, veh/h	851	23	28	966	847	1585	59	1610	79	502	1089	1572
Grp Volume(v), veh/h	555	0	0	53	0	154	265	0	0	260	0	249
Grp Sat Flow(s),veh/h/ln	901	0	0	1813	0	1585	1748	0	0	1591	0	1572
Q Serve(g_s), s	26.3	0.0	0.0	0.0	0.0	2.7	0.1	0.0	0.0	0.0	0.0	7.3
Cycle Q Clear(g_c), s	27.0	0.0	0.0	0.7	0.0	2.7	7.2	0.0	0.0	7.1	0.0	7.3
Prop In Lane	0.94		0.03	0.57		1.00	0.08		0.05	0.39		1.00
Lane Grp Cap(c), veh/h	602	0	0	1050	0	823	511	0	0	494	0	393
V/C Ratio(X)	0.92	0.00	0.00	0.05	0.00	0.19	0.52	0.00	0.00	0.53	0.00	0.63
Avail Cap(c_a), veh/h	602	0	0	1050	0	823	511	0	0	494	0	393
HCM Platoon Ratio	1.00	1.00	1.00	1.00	1.00	1.00	1.00	1.00	1.00	1.00	1.00	1.00
Upstream Filter(I)	1.00	0.00	0.00	1.00	0.00	1.00	1.00	0.00	0.00	1.00	0.00	1.00
Uniform Delay (d), s/veh	14.9	0.0	0.0	6.2	0.0	6.7	17.1	0.0	0.0	17.2	0.0	17.4
Incr Delay (d2), s/veh	21.7	0.0	0.0	0.1	0.0	0.5	3.7	0.0	0.0	4.0	0.0	7.6
Initial Q Delay(d3),s/veh	0.0	0.0	0.0	0.0	0.0	0.0	0.0	0.0	0.0	0.0	0.0	0.0
%ile BackOfQ(50%),veh/ln	9.6	0.0	0.0	0.2	0.0	0.8	3.0	0.0	0.0	3.0	0.0	3.2
Unsig. Movement Delay, s/veh												
LnGrp Delay(d),s/veh	36.6	0.0	0.0	6.3	0.0	7.2	20.8	0.0	0.0	21.2	0.0	24.9
LnGrp LOS	D	A	A	A	A	A	C	A	A	C	A	C
Approach Vol, veh/h		555			207			265			509	
Approach Delay, s/veh		36.6			6.9			20.8			23.0	
Approach LOS		D			A			C			C	

Timer - Assigned Phs		2		4		6		8				
Phs Duration (G+Y+Rc), s		19.0		33.0		19.0		33.0				
Change Period (Y+Rc), s		6.0		6.0		6.0		6.0				
Max Green Setting (Gmax), s		13.0		27.0		13.0		27.0				
Max Q Clear Time (g_c+I1), s		9.2		29.0		9.3		4.7				
Green Ext Time (p_c), s		0.5		0.0		0.9		0.7				

Intersection Summary												
HCM 6th Ctrl Delay			25.4									
HCM 6th LOS			C									

Notes

User approved pedestrian interval to be less than phase max green.

HCM 6th TWSC
3: National Drive & Boggy Ford Road

2026 Build
Timing Plan: AM

Intersection	
Int Delay, s/veh	2

Movement	EBL	EBT	EBR	WBL	WBT	WBR	NBL	NBT	NBR	SBL	SBT	SBR
Lane Configurations												
Traffic Vol, veh/h	17	323	0	0	174	36	1	11	1	47	10	6
Future Vol, veh/h	17	323	0	0	174	36	1	11	1	47	10	6
Conflicting Peds, #/hr	0	0	0	0	0	0	0	0	0	0	0	0
Sign Control	Free	Free	Free	Free	Free	Free	Stop	Stop	Stop	Stop	Stop	Stop
RT Channelized	-	-	None	-	-	None	-	-	None	-	-	None
Storage Length	-	-	-	-	-	-	-	-	-	-	-	-
Veh in Median Storage, #	-	0	-	-	0	-	-	0	-	-	0	-
Grade, %	-	0	-	-	0	-	-	0	-	-	0	-
Peak Hour Factor	92	92	92	92	92	92	92	92	92	92	92	92
Heavy Vehicles, %	6	2	2	2	2	6	2	2	2	2	2	2
Mvmt Flow	18	351	0	0	189	39	1	12	1	51	11	7

Major/Minor	Major1			Major2			Minor1			Minor2		
Conflicting Flow All	228	0	0	351	0	0	605	615	351	603	596	209
Stage 1	-	-	-	-	-	-	387	387	-	209	209	-
Stage 2	-	-	-	-	-	-	218	228	-	394	387	-
Critical Hdwy	4.16	-	-	4.12	-	-	7.12	6.52	6.22	7.12	6.52	6.22
Critical Hdwy Stg 1	-	-	-	-	-	-	6.12	5.52	-	6.12	5.52	-
Critical Hdwy Stg 2	-	-	-	-	-	-	6.12	5.52	-	6.12	5.52	-
Follow-up Hdwy	2.254	-	-	2.218	-	-	3.518	4.018	3.318	3.518	4.018	3.318
Pot Cap-1 Maneuver	1317	-	-	1208	-	-	410	407	692	411	417	831
Stage 1	-	-	-	-	-	-	637	610	-	793	729	-
Stage 2	-	-	-	-	-	-	784	715	-	631	610	-
Platoon blocked, %		-	-		-	-						
Mov Cap-1 Maneuver	1317	-	-	1208	-	-	394	400	692	396	410	831
Mov Cap-2 Maneuver	-	-	-	-	-	-	394	400	-	396	410	-
Stage 1	-	-	-	-	-	-	626	600	-	780	729	-
Stage 2	-	-	-	-	-	-	766	715	-	607	600	-

Approach	EB	WB	NB	SB
HCM Control Delay, s	0.4	0	14	15.3
HCM LOS			B	C

Minor Lane/Major Mvmt	NBLn1	EBL	EBT	EBR	WBL	WBT	WBR	SBLn1
Capacity (veh/h)	413	1317	-	-	1208	-	-	419
HCM Lane V/C Ratio	0.034	0.014	-	-	-	-	-	0.163
HCM Control Delay (s)	14	7.8	0	-	0	-	-	15.3
HCM Lane LOS	B	A	A	-	A	-	-	C
HCM 95th %tile Q(veh)	0.1	0	-	-	0	-	-	0.6

HCM 6th TWSC
4: Boggy Ford & Driveway 1

2026 Build
Timing Plan: AM

Intersection	
Int Delay, s/veh	0.7

Movement	EBL	EBT	WBT	WBR	SBL	SBR
Lane Configurations						
Traffic Vol, veh/h	4	367	243	33	29	3
Future Vol, veh/h	4	367	243	33	29	3
Conflicting Peds, #/hr	0	0	0	0	0	0
Sign Control	Free	Free	Free	Free	Stop	Stop
RT Channelized	-	None	-	None	-	None
Storage Length	-	-	-	-	0	-
Veh in Median Storage, #	-	0	0	-	0	-
Grade, %	-	0	0	-	0	-
Peak Hour Factor	92	92	92	92	92	92
Heavy Vehicles, %	2	2	2	2	2	2
Mvmt Flow	4	399	264	36	32	3

Major/Minor	Major1			Major2		
Conflicting Flow All	300	0	-	0	689	282
Stage 1	-	-	-	-	282	-
Stage 2	-	-	-	-	407	-
Critical Hdwy	4.12	-	-	-	6.42	6.22
Critical Hdwy Stg 1	-	-	-	-	5.42	-
Critical Hdwy Stg 2	-	-	-	-	5.42	-
Follow-up Hdwy	2.218	-	-	-	3.518	3.318
Pot Cap-1 Maneuver	1261	-	-	-	412	757
Stage 1	-	-	-	-	766	-
Stage 2	-	-	-	-	672	-
Platoon blocked, %		-	-	-		
Mov Cap-1 Maneuver	1261	-	-	-	410	757
Mov Cap-2 Maneuver	-	-	-	-	410	-
Stage 1	-	-	-	-	763	-
Stage 2	-	-	-	-	672	-

Approach	EB	WB	SB
HCM Control Delay, s	0.1	0	14.2
HCM LOS			B

Minor Lane/Major Mvmt	EBL	EBT	WBT	WBR	SBLn1
Capacity (veh/h)	1261	-	-	-	428
HCM Lane V/C Ratio	0.003	-	-	-	0.081
HCM Control Delay (s)	7.9	0	-	-	14.2
HCM Lane LOS	A	A	-	-	B
HCM 95th %tile Q(veh)	0	-	-	-	0.3

HCM 6th Signalized Intersection Summary
1: Lohman Ford & Dawn Drive

2026 Build
Timing Plan: PM

Movement	EBL	EBT	EBR	WBL	WBT	WBR	NBL	NBT	NBR	SBL	SBT	SBR
Lane Configurations												
Traffic Volume (veh/h)	262	15	56	16	11	26	34	615	17	26	930	245
Future Volume (veh/h)	262	15	56	16	11	26	34	615	17	26	930	245
Initial Q (Qb), veh	0	0	0	0	0	0	0	0	0	0	0	0
Ped-Bike Adj(A_pbT)	1.00		1.00	1.00		1.00	1.00		1.00	1.00		1.00
Parking Bus, Adj	1.00	1.00	1.00	1.00	1.00	1.00	1.00	1.00	1.00	1.00	1.00	1.00
Work Zone On Approach		No			No			No			No	
Adj Sat Flow, veh/h/ln	1870	1796	1752	1870	1767	1841	1870	1870	1870	1841	1870	1856
Adj Flow Rate, veh/h	312	18	67	19	13	31	40	732	20	31	1107	292
Peak Hour Factor	0.84	0.84	0.84	0.84	0.84	0.84	0.84	0.84	0.84	0.84	0.84	0.84
Percent Heavy Veh, %	2	7	10	2	9	4	2	2	2	4	2	3
Cap, veh/h	265	15	243	22	15	36	123	987	27	280	1011	850
Arrive On Green	0.16	0.16	0.16	0.05	0.05	0.05	0.03	0.54	0.54	0.03	0.54	0.54
Sat Flow, veh/h	1622	94	1485	483	330	788	1781	1812	50	1753	1870	1572
Grp Volume(v), veh/h	330	0	67	63	0	0	40	0	752	31	1107	292
Grp Sat Flow(s),veh/h/ln	1715	0	1485	1601	0	0	1781	0	1861	1753	1870	1572
Q Serve(g_s), s	18.0	0.0	4.3	4.3	0.0	0.0	1.1	0.0	33.9	0.9	59.5	11.5
Cycle Q Clear(g_c), s	18.0	0.0	4.3	4.3	0.0	0.0	1.1	0.0	33.9	0.9	59.5	11.5
Prop In Lane	0.95		1.00	0.30		0.49	1.00		0.03	1.00		1.00
Lane Grp Cap(c), veh/h	281	0	243	73	0	0	123	0	1014	280	1011	850
V/C Ratio(X)	1.18	0.00	0.28	0.87	0.00	0.00	0.33	0.00	0.74	0.11	1.09	0.34
Avail Cap(c_a), veh/h	281	0	243	73	0	0	146	0	1014	311	1011	850
HCM Platoon Ratio	1.00	1.00	1.00	1.00	1.00	1.00	1.00	1.00	1.00	1.00	1.00	1.00
Upstream Filter(I)	1.00	0.00	1.00	1.00	0.00	0.00	1.00	0.00	1.00	1.00	1.00	1.00
Uniform Delay (d), s/veh	46.0	0.0	40.3	52.2	0.0	0.0	26.3	0.0	19.1	15.8	25.3	14.3
Incr Delay (d2), s/veh	110.0	0.0	0.6	62.1	0.0	0.0	1.5	0.0	4.9	0.2	57.8	1.1
Initial Q Delay(d3),s/veh	0.0	0.0	0.0	0.0	0.0	0.0	0.0	0.0	0.0	0.0	0.0	0.0
%ile BackOfQ(50%),veh/ln	16.2	0.0	1.6	3.0	0.0	0.0	0.6	0.0	15.3	0.3	40.8	4.3
Unsig. Movement Delay, s/veh												
LnGrp Delay(d),s/veh	156.0	0.0	40.9	114.3	0.0	0.0	27.9	0.0	24.0	15.9	83.1	15.4
LnGrp LOS	F	A	D	F	A	A	C	A	C	B	F	B
Approach Vol, veh/h		397			63			792			1430	
Approach Delay, s/veh		136.5			114.3			24.2			67.8	
Approach LOS		F			F			C			E	
Timer - Assigned Phs	1	2		4	5	6		8				
Phs Duration (G+Y+Rc), s	9.1	65.9		24.0	9.5	65.5		11.0				
Change Period (Y+Rc), s	6.0	6.0		6.0	6.0	6.0		6.0				
Max Green Setting (Gmax), s	5.0	58.0		18.0	5.0	58.0		5.0				
Max Q Clear Time (g_c+I1), s	2.9	35.9		20.0	3.1	61.5		6.3				
Green Ext Time (p_c), s	0.0	5.7		0.0	0.0	0.0		0.0				
Intersection Summary												
HCM 6th Ctrl Delay			66.2									
HCM 6th LOS			E									

Notes

User approved pedestrian interval to be less than phase max green.

HCM 6th Signalized Intersection Summary
2: Lohman Ford Road & Boggy Ford Rd/Shoreline Ranch Dr

2026 Build
Timing Plan: PM

Movement	EBL	EBT	EBR	WBL	WBT	WBR	NBL	NBT	NBR	SBL	SBT	SBR
Lane Configurations												
Traffic Volume (veh/h)	340	29	25	18	24	150	26	195	34	204	222	517
Future Volume (veh/h)	340	29	25	18	24	150	26	195	34	204	222	517
Initial Q (Qb), veh	0	0	0	0	0	0	0	0	0	0	0	0
Ped-Bike Adj(A_pbT)	1.00		1.00	1.00		1.00	1.00		1.00	1.00		1.00
Parking Bus, Adj	1.00	1.00	1.00	1.00	1.00	1.00	1.00	1.00	1.00	1.00	1.00	1.00
Work Zone On Approach		No			No			No			No	
Adj Sat Flow, veh/h/ln	1870	1870	1841	1870	1870	1826	1767	1856	1870	1796	1870	1870
Adj Flow Rate, veh/h	370	32	27	20	26	163	28	212	37	222	241	562
Peak Hour Factor	0.92	0.92	0.92	0.92	0.92	0.92	0.92	0.92	0.92	0.92	0.92	0.92
Percent Heavy Veh, %	2	2	4	2	2	5	9	3	2	7	2	2
Cap, veh/h	506	34	29	341	413	591	66	333	51	212	154	663
Arrive On Green	0.38	0.38	0.38	0.38	0.38	0.38	0.42	0.42	0.42	0.42	0.42	0.42
Sat Flow, veh/h	1032	89	75	668	1081	1547	0	797	123	295	367	1585
Grp Volume(v), veh/h	429	0	0	46	0	163	277	0	0	463	0	562
Grp Sat Flow(s),veh/h/ln	1196	0	0	1749	0	1547	919	0	0	662	0	1585
Q Serve(g_s), s	19.9	0.0	0.0	0.0	0.0	4.4	0.0	0.0	0.0	0.0	0.0	19.2
Cycle Q Clear(g_c), s	20.9	0.0	0.0	0.9	0.0	4.4	25.1	0.0	0.0	25.1	0.0	19.2
Prop In Lane	0.86		0.06	0.43		1.00	0.10		0.13	0.48		1.00
Lane Grp Cap(c), veh/h	569	0	0	754	0	591	451	0	0	366	0	663
V/C Ratio(X)	0.75	0.00	0.00	0.06	0.00	0.28	0.61	0.00	0.00	1.27	0.00	0.85
Avail Cap(c_a), veh/h	570	0	0	756	0	593	451	0	0	366	0	663
HCM Platoon Ratio	1.00	1.00	1.00	1.00	1.00	1.00	1.00	1.00	1.00	1.00	1.00	1.00
Upstream Filter(I)	1.00	0.00	0.00	1.00	0.00	1.00	1.00	0.00	0.00	1.00	0.00	1.00
Uniform Delay (d), s/veh	18.4	0.0	0.0	11.8	0.0	12.8	13.3	0.0	0.0	20.1	0.0	15.7
Incr Delay (d2), s/veh	5.7	0.0	0.0	0.0	0.0	0.3	6.2	0.0	0.0	139.7	0.0	12.8
Initial Q Delay(d3),s/veh	0.0	0.0	0.0	0.0	0.0	0.0	0.0	0.0	0.0	0.0	0.0	0.0
%ile BackOfQ(50%),veh/ln	5.9	0.0	0.0	0.4	0.0	1.4	3.0	0.0	0.0	19.2	0.0	8.3
Unsig. Movement Delay, s/veh												
LnGrp Delay(d),s/veh	24.0	0.0	0.0	11.8	0.0	13.1	19.4	0.0	0.0	159.8	0.0	28.5
LnGrp LOS	C	A	A	B	A	B	B	A	A	F	A	C
Approach Vol, veh/h		429			209			277			1025	
Approach Delay, s/veh		24.0			12.8			19.4			87.8	
Approach LOS		C			B			B			F	
Timer - Assigned Phs		2		4		6		8				
Phs Duration (G+Y+Rc), s		31.1		28.9		31.1		28.9				
Change Period (Y+Rc), s		6.0		6.0		6.0		6.0				
Max Green Setting (Gmax), s		25.0		23.0		25.0		23.0				
Max Q Clear Time (g_c+I1), s		27.1		22.9		27.1		6.4				
Green Ext Time (p_c), s		0.0		0.0		0.0		0.7				
Intersection Summary												
HCM 6th Ctrl Delay			55.9									
HCM 6th LOS			E									

HCM 6th TWSC
3: National Drive & Boggy Ford Road

2026 Build
Timing Plan: PM

Intersection	
Int Delay, s/veh	1.8

Movement	EBL	EBT	EBR	WBL	WBT	WBR	NBL	NBT	NBR	SBL	SBT	SBR
Lane Configurations												
Traffic Vol, veh/h	9	196	2	1	301	37	2	12	0	30	17	6
Future Vol, veh/h	9	196	2	1	301	37	2	12	0	30	17	6
Conflicting Peds, #/hr	0	0	0	0	0	0	0	0	0	0	0	0
Sign Control	Free	Free	Free	Free	Free	Free	Stop	Stop	Stop	Stop	Stop	Stop
RT Channelized	-	-	None	-	-	None	-	-	None	-	-	None
Storage Length	-	-	-	-	-	-	-	-	-	-	-	-
Veh in Median Storage, #	-	0	-	-	0	-	-	0	-	-	0	-
Grade, %	-	0	-	-	0	-	-	0	-	-	0	-
Peak Hour Factor	86	86	86	86	86	86	86	86	86	86	86	86
Heavy Vehicles, %	2	2	2	2	2	6	2	2	2	2	2	17
Mvmt Flow	10	228	2	1	350	43	2	14	0	35	20	7

Major/Minor	Major1			Major2			Minor1			Minor2		
Conflicting Flow All	393	0	0	230	0	0	636	644	229	630	624	372
Stage 1	-	-	-	-	-	-	249	249	-	374	374	-
Stage 2	-	-	-	-	-	-	387	395	-	256	250	-
Critical Hdwy	4.12	-	-	4.12	-	-	7.12	6.52	6.22	7.12	6.52	6.37
Critical Hdwy Stg 1	-	-	-	-	-	-	6.12	5.52	-	6.12	5.52	-
Critical Hdwy Stg 2	-	-	-	-	-	-	6.12	5.52	-	6.12	5.52	-
Follow-up Hdwy	2.218	-	-	2.218	-	-	3.518	4.018	3.318	3.518	4.018	3.453
Pot Cap-1 Maneuver	1166	-	-	1338	-	-	391	391	810	394	402	642
Stage 1	-	-	-	-	-	-	755	701	-	647	618	-
Stage 2	-	-	-	-	-	-	637	605	-	749	700	-
Platoon blocked, %		-	-		-	-						
Mov Cap-1 Maneuver	1166	-	-	1338	-	-	369	387	810	380	398	642
Mov Cap-2 Maneuver	-	-	-	-	-	-	369	387	-	380	398	-
Stage 1	-	-	-	-	-	-	747	694	-	641	617	-
Stage 2	-	-	-	-	-	-	609	604	-	727	693	-

Approach	EB	WB	NB	SB
HCM Control Delay, s	0.4	0	14.8	15.5
HCM LOS			B	C

Minor Lane/Major Mvmt	NBLn1	EBL	EBT	EBR	WBL	WBT	WBR	SBLn1
Capacity (veh/h)	384	1166	-	-	1338	-	-	405
HCM Lane V/C Ratio	0.042	0.009	-	-	0.001	-	-	0.152
HCM Control Delay (s)	14.8	8.1	0	-	7.7	0	-	15.5
HCM Lane LOS	B	A	A	-	A	A	-	C
HCM 95th %tile Q(veh)	0.1	0	-	-	0	-	-	0.5

HCM 6th TWSC
4: Boggy Ford & Driveway 1

2026 Build
Timing Plan: PM

Intersection	
Int Delay, s/veh	0.8

Movement	EBL	EBT	WBT	WBR	SBL	SBR
Lane Configurations						
Traffic Vol, veh/h	5	221	526	41	32	4
Future Vol, veh/h	5	221	526	41	32	4
Conflicting Peds, #/hr	0	0	0	0	0	0
Sign Control	Free	Free	Free	Free	Stop	Stop
RT Channelized	-	None	-	None	-	None
Storage Length	-	-	-	-	0	-
Veh in Median Storage, #	-	0	0	-	0	-
Grade, %	-	0	0	-	0	-
Peak Hour Factor	92	92	92	92	92	92
Heavy Vehicles, %	2	2	2	2	2	2
Mvmt Flow	5	240	572	45	35	4

Major/Minor	Major1		Major2		Minor2	
Conflicting Flow All	617	0	-	0	845	595
Stage 1	-	-	-	-	595	-
Stage 2	-	-	-	-	250	-
Critical Hdwy	4.12	-	-	-	6.42	6.22
Critical Hdwy Stg 1	-	-	-	-	5.42	-
Critical Hdwy Stg 2	-	-	-	-	5.42	-
Follow-up Hdwy	2.218	-	-	-	3.518	3.318
Pot Cap-1 Maneuver	963	-	-	-	333	504
Stage 1	-	-	-	-	551	-
Stage 2	-	-	-	-	792	-
Platoon blocked, %		-	-	-		
Mov Cap-1 Maneuver	963	-	-	-	331	504
Mov Cap-2 Maneuver	-	-	-	-	331	-
Stage 1	-	-	-	-	548	-
Stage 2	-	-	-	-	792	-

Approach	EB	WB	SB
HCM Control Delay, s	0.2	0	16.8
HCM LOS			C

Minor Lane/Major Mvmt	EBL	EBT	WBT	WBR	SBLn1
Capacity (veh/h)	963	-	-	-	344
HCM Lane V/C Ratio	0.006	-	-	-	0.114
HCM Control Delay (s)	8.8	0	-	-	16.8
HCM Lane LOS	A	A	-	-	C
HCM 95th %tile Q(veh)	0	-	-	-	0.4

Timings
1: Lohman Ford & Dawn Drive

2026 Build - Mitigation
Timing Plan: AM

Lane Group	EBL	EBT	EBR	WBL	WBT	WBR	NBL	NBT	NBR	SBL	SBT	SBR
Lane Configurations												
Traffic Volume (vph)	312	11	55	19	6	36	31	940	22	15	568	143
Future Volume (vph)	312	11	55	19	6	36	31	940	22	15	568	143
Lane Util. Factor	0.95	0.95	1.00	1.00	1.00	1.00	1.00	1.00	1.00	1.00	1.00	1.00
Frt			0.850		0.920			0.997				0.850
Flt Protected	0.950	0.956			0.985		0.950			0.950		
Satd. Flow (prot)	1681	1684	1583	0	1644	0	1770	1840	0	1770	1845	1553
Flt Permitted	0.950	0.956			0.985		0.275			0.055		
Satd. Flow (perm)	1681	1684	1583	0	1644	0	512	1840	0	102	1845	1553
Satd. Flow (RTOR)			95		42			1				159
Peak Hour Factor	0.85	0.85	0.85	0.85	0.85	0.85	0.85	0.85	0.85	0.85	0.85	0.85
Heavy Vehicles (%)	2%	9%	2%	6%	17%	2%	2%	3%	2%	2%	3%	4%
Adj. Flow (vph)	367	13	65	22	7	42	36	1106	26	18	668	168
Shared Lane Traffic (%)	48%											
Lane Group Flow (vph)	191	189	65	0	71	0	36	1132	0	18	668	168
Turn Type	Split	NA	Perm	Split	NA		pm+pt	NA		pm+pt	NA	Perm
Protected Phases	4	4		8	8		5	2		1	6	
Permitted Phases			4				2			6		6
Detector Phase	4	4	4	8	8		5	2		1	6	6
Switch Phase												
Minimum Initial (s)	5.0	5.0	5.0	5.0	5.0		5.0	5.0		5.0	5.0	5.0
Minimum Split (s)	22.5	22.5	22.5	22.5	22.5		9.5	22.5		9.5	22.5	22.5
Total Split (s)	26.0	26.0	26.0	22.5	22.5		9.5	62.0		9.5	62.0	62.0
Total Split (%)	21.7%	21.7%	21.7%	18.8%	18.8%		7.9%	51.7%		7.9%	51.7%	51.7%
Yellow Time (s)	3.5	3.5	3.5	3.5	3.5		3.5	3.5		3.5	3.5	3.5
All-Red Time (s)	1.0	1.0	1.0	1.0	1.0		1.0	1.0		1.0	1.0	1.0
Lost Time Adjust (s)	0.0	0.0	0.0		0.0		0.0	0.0		0.0	0.0	0.0
Total Lost Time (s)	4.5	4.5	4.5		4.5		4.5	4.5		4.5	4.5	4.5
Lead/Lag	Lead	Lead	Lead	Lag	Lag		Lead	Lag		Lead	Lag	Lag
Lead-Lag Optimize?	Yes	Yes	Yes	Yes	Yes		Yes	Yes		Yes	Yes	Yes
Recall Mode	None	None	None	None	None		None	C-Max		None	C-Max	C-Max
Act Effct Green (s)	18.0	18.0	18.0		8.0		81.0	78.1		79.5	75.7	75.7
Actuated g/C Ratio	0.15	0.15	0.15		0.07		0.68	0.65		0.66	0.63	0.63
v/c Ratio	0.76	0.75	0.21		0.48		0.09	0.94		0.12	0.57	0.16
Control Delay	67.8	67.1	4.9		36.4		8.7	38.5		10.1	18.8	3.0
Queue Delay	0.0	0.0	0.0		0.0		0.0	0.0		0.0	0.0	0.0
Total Delay	67.8	67.1	4.9		36.4		8.7	38.5		10.1	18.8	3.0
LOS	E	E	A		D		A	D		B	B	A
Approach Delay		58.3			36.4			37.6			15.5	
Approach LOS		E			D			D			B	
Queue Length 50th (ft)	149	148	0		22		9	692		4	325	3
Queue Length 95th (ft)	216	213	14		62		23	#1209		14	482	32
Internal Link Dist (ft)		297			340			439			514	
Turn Bay Length (ft)	200									200		
Base Capacity (vph)	301	301	361		282		412	1198		150	1163	1038
Starvation Cap Reductn	0	0	0		0		0	0		0	0	0
Spillback Cap Reductn	0	0	0		0		0	0		0	0	0
Storage Cap Reductn	0	0	0		0		0	0		0	0	0
Reduced v/c Ratio	0.63	0.63	0.18		0.25		0.09	0.94		0.12	0.57	0.16

Timings
1: Lohman Ford & Dawn Drive

2026 Build - Mitigation
Timing Plan: AM

Intersection Summary	
Cycle Length: 120	
Actuated Cycle Length: 120	
Offset: 0 (0%), Referenced to phase 2:NBTL and 6:SBTL, Start of Green	
Natural Cycle: 150	
Control Type: Actuated-Coordinated	
Maximum v/c Ratio: 0.94	
Intersection Signal Delay: 33.8	Intersection LOS: C
Intersection Capacity Utilization 73.9%	ICU Level of Service D
Analysis Period (min) 15	

95th percentile volume exceeds capacity, queue may be longer.
Queue shown is maximum after two cycles.

Splits and Phases: 1: Lohman Ford & Dawn Drive

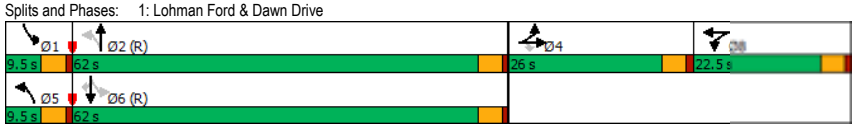

Timings
2: Lohman Ford Road & Boggy Ford Rd/Shoreline Ranch Dr

2026 Build - Mitigation
Timing Plan: AM

Lane Group	EBL	EBT	EBR	WBL	WBT	WBR	NBL	NBT	NBR	SBL	SBT	SBR
Lane Configurations												
Traffic Volume (vph)	493	13	16	28	22	145	19	219	11	95	149	234
Future Volume (vph)	493	13	16	28	22	145	19	219	11	95	149	234
Lane Util. Factor	0.95	0.95	1.00	1.00	1.00	1.00	1.00	1.00	1.00	1.00	1.00	1.00
Frt		0.991				0.850		0.994				0.850
Flt Protected	0.950	0.957			0.972			0.996			0.981	
Satd. Flow (prot)	1681	1653	0	0	1811	1583	0	1844	0	0	1789	1568
Flt Permitted	0.722	0.712			0.759			0.962			0.807	
Satd. Flow (perm)	1278	1230	0	0	1414	1583	0	1781	0	0	1472	1568
Satd. Flow (RTOR)		13				154		8				249
Peak Hour Factor	0.94	0.94	0.94	0.94	0.94	0.94	0.94	0.94	0.94	0.94	0.94	0.94
Heavy Vehicles (%)	2%	33%	2%	2%	2%	2%	2%	2%	2%	6%	3%	3%
Adj. Flow (vph)	524	14	17	30	23	154	20	233	12	101	159	249
Shared Lane Traffic (%)	47%											
Lane Group Flow (vph)	278	277	0	0	53	154	0	265	0	0	260	249
Turn Type	Perm	NA		Perm	NA	Perm	Perm	NA		Perm	NA	Perm
Protected Phases		4			8			2			6	
Permitted Phases	4			8		8	2			6		6
Detector Phase	4	4		8	8	8	2	2		6	6	6
Switch Phase												
Minimum Initial (s)	5.0	5.0		5.0	5.0	5.0	5.0	5.0		5.0	5.0	5.0
Minimum Split (s)	22.5	22.5		22.5	22.5	22.5	22.5	22.5		22.5	22.5	22.5
Total Split (s)	16.4	16.4		16.4	16.4	16.4	14.0	14.0		14.0	14.0	14.0
Total Split (%)	53.9%	53.9%		53.9%	53.9%	53.9%	46.1%	46.1%		46.1%	46.1%	46.1%
Yellow Time (s)	3.5	3.5		3.5	3.5	3.5	3.5	3.5		3.5	3.5	3.5
All-Red Time (s)	1.0	1.0		1.0	1.0	1.0	1.0	1.0		1.0	1.0	1.0
Lost Time Adjust (s)	0.0	0.0			0.0	0.0		0.0			0.0	0.0
Total Lost Time (s)	4.5	4.5			4.5	4.5		4.5			4.5	4.5
Lead/Lag												
Lead-Lag Optimize?												
Recall Mode	None	None		None	None	None	C-Max	C-Max		C-Max	C-Max	C-Max
Act Effct Green (s)	10.5	10.5			10.5	10.5		10.9			10.9	10.9
Actuated g/C Ratio	0.35	0.35			0.35	0.35		0.36			0.36	0.36
v/c Ratio	0.63	0.64			0.11	0.24		0.41			0.49	0.34
Control Delay	15.0	15.0			6.6	2.6		10.2			12.2	3.1
Queue Delay	0.0	0.0			0.0	0.0		0.0			0.0	0.0
Total Delay	15.0	15.0			6.6	2.6		10.2			12.2	3.1
LOS	B	B			A	A		B			B	A
Approach Delay		15.0			3.6			10.2			7.7	
Approach LOS		B			A			B			A	
Queue Length 50th (ft)	32	30			5	0		31			33	0
Queue Length 95th (ft)	71	69			15	15		64			#70	23
Internal Link Dist (ft)		148			424			364			233	
Turn Bay Length (ft)	200					100						135
Base Capacity (vph)	500	489			553	713		644			528	722
Starvation Cap Reductn	0	0			0	0		0			0	0
Spillback Cap Reductn	0	0			0	0		0			0	0
Storage Cap Reductn	0	0			0	0		0			0	0
Reduced v/c Ratio	0.56	0.57			0.10	0.22		0.41			0.49	0.34

Timings
2: Lohman Ford Road & Boggy Ford Rd/Shoreline Ranch Dr

2026 Build - Mitigation
Timing Plan: AM

Intersection Summary	
Cycle Length: 30.4	
Actuated Cycle Length: 30.4	
Offset: 0 (0%), Referenced to phase 2:NBTL and 6:SBTL, Start of Green	
Natural Cycle: 45	
Control Type: Actuated-Coordinated	
Maximum v/c Ratio: 0.64	
Intersection Signal Delay: 10.2	Intersection LOS: B
Intersection Capacity Utilization 58.7%	ICU Level of Service B
Analysis Period (min) 15	

\# 95th percentile volume exceeds capacity, queue may be longer.
Queue shown is maximum after two cycles.

Splits and Phases: 2: Lohman Ford Road & Boggy Ford Rd/Shoreline Ranch Dr

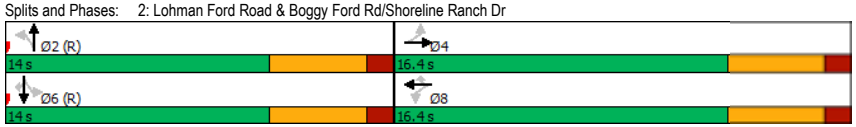

HCM 6th TWSC
3: National Drive & Boggy Ford Road

2026 Build - Mitigation
Timing Plan: AM

Intersection	
Int Delay, s/veh	2

Movement	EBL	EBT	EBR	WBL	WBT	WBR	NBL	NBT	NBR	SBL	SBT	SBR
Lane Configurations												
Traffic Vol, veh/h	17	323	0	0	174	36	1	11	1	47	10	6
Future Vol, veh/h	17	323	0	0	174	36	1	11	1	47	10	6
Conflicting Peds, #/hr	0	0	0	0	0	0	0	0	0	0	0	0
Sign Control	Free	Free	Free	Free	Free	Free	Stop	Stop	Stop	Stop	Stop	Stop
RT Channelized	-	-	None	-	-	None	-	-	None	-	-	None
Storage Length	-	-	-	-	-	-	-	-	-	-	-	-
Veh in Median Storage, #	-	0	-	-	0	-	-	0	-	-	0	-
Grade, %	-	0	-	-	0	-	-	0	-	-	0	-
Peak Hour Factor	92	92	92	92	92	92	92	92	92	92	92	92
Heavy Vehicles, %	6	2	2	2	2	6	2	2	2	2	2	2
Mvmt Flow	18	351	0	0	189	39	1	12	1	51	11	7

Major/Minor	Major1			Major2			Minor1			Minor2		
Conflicting Flow All	228	0	0	351	0	0	605	615	351	603	596	209
Stage 1	-	-	-	-	-	-	387	387	-	209	209	-
Stage 2	-	-	-	-	-	-	218	228	-	394	387	-
Critical Hdwy	4.16	-	-	4.12	-	-	7.12	6.52	6.22	7.12	6.52	6.22
Critical Hdwy Stg 1	-	-	-	-	-	-	6.12	5.52	-	6.12	5.52	-
Critical Hdwy Stg 2	-	-	-	-	-	-	6.12	5.52	-	6.12	5.52	-
Follow-up Hdwy	2.254	-	-	2.218	-	-	3.518	4.018	3.318	3.518	4.018	3.318
Pot Cap-1 Maneuver	1317	-	-	1208	-	-	410	407	692	411	417	831
Stage 1	-	-	-	-	-	-	637	610	-	793	729	-
Stage 2	-	-	-	-	-	-	784	715	-	631	610	-
Platoon blocked, %		-	-		-	-						
Mov Cap-1 Maneuver	1317	-	-	1208	-	-	394	400	692	396	410	831
Mov Cap-2 Maneuver	-	-	-	-	-	-	394	400	-	396	410	-
Stage 1	-	-	-	-	-	-	626	600	-	780	729	-
Stage 2	-	-	-	-	-	-	766	715	-	607	600	-

Approach	EB	WB	NB	SB
HCM Control Delay, s	0.4	0	14	15.3
HCM LOS			B	C

Minor Lane/Major Mvmt	NBLn1	EBL	EBT	EBR	WBL	WBT	WBR	SBLn1
Capacity (veh/h)	413	1317	-	-	1208	-	-	419
HCM Lane V/C Ratio	0.034	0.014	-	-	-	-	-	0.163
HCM Control Delay (s)	14	7.8	0	-	0	-	-	15.3
HCM Lane LOS	B	A	A	-	A	-	-	C
HCM 95th %tile Q(veh)	0.1	0	-	-	0	-	-	0.6

HCM 6th TWSC
4: Boggy Ford & Driveway 1

2026 Build - Mitigation
Timing Plan: AM

Intersection	
Int Delay, s/veh	0.7

Movement	EBL	EBT	WBT	WBR	SBL	SBR
Lane Configurations						
Traffic Vol, veh/h	4	367	243	33	29	3
Future Vol, veh/h	4	367	243	33	29	3
Conflicting Peds, #/hr	0	0	0	0	0	0
Sign Control	Free	Free	Free	Free	Stop	Stop
RT Channelized	-	None	-	None	-	None
Storage Length	-	-	-	-	0	-
Veh in Median Storage, #	-	0	0	-	0	-
Grade, %	-	0	0	-	0	-
Peak Hour Factor	92	92	92	92	92	92
Heavy Vehicles, %	2	2	2	2	2	2
Mvmt Flow	4	399	264	36	32	3

Major/Minor	Major1			Major2		
Conflicting Flow All	300	0	-	0	689	282
Stage 1	-	-	-	-	282	-
Stage 2	-	-	-	-	407	-
Critical Hdwy	4.12	-	-	-	6.42	6.22
Critical Hdwy Stg 1	-	-	-	-	5.42	-
Critical Hdwy Stg 2	-	-	-	-	5.42	-
Follow-up Hdwy	2.218	-	-	-	3.518	3.318
Pot Cap-1 Maneuver	1261	-	-	-	412	757
Stage 1	-	-	-	-	766	-
Stage 2	-	-	-	-	672	-
Platoon blocked, %		-	-	-		
Mov Cap-1 Maneuver	1261	-	-	-	410	757
Mov Cap-2 Maneuver	-	-	-	-	410	-
Stage 1	-	-	-	-	763	-
Stage 2	-	-	-	-	672	-

Approach	EB	WB	SB
HCM Control Delay, s	0.1	0	14.2
HCM LOS			B

Minor Lane/Major Mvmt	EBL	EBT	WBT	WBR	SBLn1
Capacity (veh/h)	1261	-	-	-	428
HCM Lane V/C Ratio	0.003	-	-	-	0.081
HCM Control Delay (s)	7.9	0	-	-	14.2
HCM Lane LOS	A	A	-	-	B
HCM 95th %tile Q(veh)	0	-	-	-	0.3

HCM 6th TWSC
3: National Drive & Boggy Ford Road

2026 Build Mitigation
Timing Plan: PM

Intersection	
Int Delay, s/veh	1.8

Movement	EBL	EBT	EBR	WBL	WBT	WBR	NBL	NBT	NBR	SBL	SBT	SBR
Lane Configurations												
Traffic Vol, veh/h	9	196	2	1	301	37	2	12	0	30	17	6
Future Vol, veh/h	9	196	2	1	301	37	2	12	0	30	17	6
Conflicting Peds, #/hr	0	0	0	0	0	0	0	0	0	0	0	0
Sign Control	Free	Free	Free	Free	Free	Free	Stop	Stop	Stop	Stop	Stop	Stop
RT Channelized	-	-	None	-	-	None	-	-	None	-	-	None
Storage Length	-	-	-	-	-	-	-	-	-	-	-	-
Veh in Median Storage, #	-	0	-	-	0	-	-	0	-	-	0	-
Grade, %	-	0	-	-	0	-	-	0	-	-	0	-
Peak Hour Factor	86	86	86	86	86	86	86	86	86	86	86	86
Heavy Vehicles, %	2	2	2	2	2	6	2	2	2	2	2	17
Mvmt Flow	10	228	2	1	350	43	2	14	0	35	20	7

Major/Minor	Major1			Major2			Minor1			Minor2		
Conflicting Flow All	393	0	0	230	0	0	636	644	229	630	624	372
Stage 1	-	-	-	-	-	-	249	249	-	374	374	-
Stage 2	-	-	-	-	-	-	387	395	-	256	250	-
Critical Hdwy	4.12	-	-	4.12	-	-	7.12	6.52	6.22	7.12	6.52	6.37
Critical Hdwy Stg 1	-	-	-	-	-	-	6.12	5.52	-	6.12	5.52	-
Critical Hdwy Stg 2	-	-	-	-	-	-	6.12	5.52	-	6.12	5.52	-
Follow-up Hdwy	2.218	-	-	2.218	-	-	3.518	4.018	3.318	3.518	4.018	3.453
Pot Cap-1 Maneuver	1166	-	-	1338	-	-	391	391	810	394	402	642
Stage 1	-	-	-	-	-	-	755	701	-	647	618	-
Stage 2	-	-	-	-	-	-	637	605	-	749	700	-
Platoon blocked, %		-	-		-	-						
Mov Cap-1 Maneuver	1166	-	-	1338	-	-	369	387	810	380	398	642
Mov Cap-2 Maneuver	-	-	-	-	-	-	369	387	-	380	398	-
Stage 1	-	-	-	-	-	-	747	694	-	641	617	-
Stage 2	-	-	-	-	-	-	609	604	-	727	693	-

Approach	EB	WB	NB	SB
HCM Control Delay, s	0.4	0	14.8	15.5
HCM LOS			B	C

Minor Lane/Major Mvmt	NBLn1	EBL	EBT	EBR	WBL	WBT	WBR	SBLn1
Capacity (veh/h)	384	1166	-	-	1338	-	-	405
HCM Lane V/C Ratio	0.042	0.009	-	-	0.001	-	-	0.152
HCM Control Delay (s)	14.8	8.1	0	-	7.7	0	-	15.5
HCM Lane LOS	B	A	A	-	A	A	-	C
HCM 95th %tile Q(veh)	0.1	0	-	-	0	-	-	0.5

HCM 6th TWSC
4: Boggy Ford & Driveway 1

2026 Build Mitigation
Timing Plan: PM

Intersection	
Int Delay, s/veh	0.8

Movement	EBL	EBT	WBT	WBR	SBL	SBR
Lane Configurations						
Traffic Vol, veh/h	5	221	526	41	32	4
Future Vol, veh/h	5	221	526	41	32	4
Conflicting Peds, #/hr	0	0	0	0	0	0
Sign Control	Free	Free	Free	Free	Stop	Stop
RT Channelized	-	None	-	None	-	None
Storage Length	-	-	-	-	0	-
Veh in Median Storage, #	-	0	0	-	0	-
Grade, %	-	0	0	-	0	-
Peak Hour Factor	92	92	92	92	92	92
Heavy Vehicles, %	2	2	2	2	2	2
Mvmt Flow	5	240	572	45	35	4

Major/Minor	Major1		Major2		Minor2	
Conflicting Flow All	617	0	-	0	845	595
Stage 1	-	-	-	-	595	-
Stage 2	-	-	-	-	250	-
Critical Hdwy	4.12	-	-	-	6.42	6.22
Critical Hdwy Stg 1	-	-	-	-	5.42	-
Critical Hdwy Stg 2	-	-	-	-	5.42	-
Follow-up Hdwy	2.218	-	-	-	3.518	3.318
Pot Cap-1 Maneuver	963	-	-	-	333	504
Stage 1	-	-	-	-	551	-
Stage 2	-	-	-	-	792	-
Platoon blocked, %		-	-	-		
Mov Cap-1 Maneuver	963	-	-	-	331	504
Mov Cap-2 Maneuver	-	-	-	-	331	-
Stage 1	-	-	-	-	548	-
Stage 2	-	-	-	-	792	-

Approach	EB	WB	SB
HCM Control Delay, s	0.2	0	16.8
HCM LOS			C

Minor Lane/Major Mvmt	EBL	EBT	WBT	WBR	SBLn1
Capacity (veh/h)	963	-	-	-	344
HCM Lane V/C Ratio	0.006	-	-	-	0.114
HCM Control Delay (s)	8.8	0	-	-	16.8
HCM Lane LOS	A	A	-	-	C
HCM 95th %tile Q(veh)	0	-	-	-	0.4

Timings
1: Lohman Ford & Dawn Drive

2026 Build Mitigation
Timing Plan: PM

Lane Group	EBL	EBT	EBR	WBL	WBT	WBR	NBL	NBT	NBR	SBL	SBT	SBR
Lane Configurations												
Traffic Volume (vph)	262	15	56	16	11	26	34	615	17	26	930	245
Future Volume (vph)	262	15	56	16	11	26	34	615	17	26	930	245
Lane Util. Factor	0.95	0.95	1.00	1.00	1.00	1.00	1.00	1.00	1.00	1.00	1.00	1.00
Frt			0.850		0.934			0.996				0.850
Flt Protected	0.950	0.957			0.985		0.950			0.950		
Satd. Flow (prot)	1681	1684	1468	0	1674	0	1770	1855	0	1736	1863	1568
Flt Permitted	0.950	0.957			0.985		0.054			0.244		
Satd. Flow (perm)	1681	1684	1468	0	1674	0	101	1855	0	446	1863	1568
Satd. Flow (RTOR)			95		31			2				177
Peak Hour Factor	0.85	0.85	0.85	0.85	0.85	0.85	0.85	0.85	0.85	0.85	0.85	0.85
Heavy Vehicles (%)	2%	7%	10%	2%	9%	4%	2%	2%	2%	4%	2%	3%
Adj. Flow (vph)	308	18	66	19	13	31	40	724	20	31	1094	288
Shared Lane Traffic (%)	47%											
Lane Group Flow (vph)	163	163	66	0	63	0	40	744	0	31	1094	288
Turn Type	Split	NA	Perm	Split	NA		pm+pt	NA		pm+pt	NA	Perm
Protected Phases	4	4		8	8		5	2		1	6	
Permitted Phases			4				2			6		6
Detector Phase	4	4	4	8	8		5	2		1	6	6
Switch Phase												
Minimum Initial (s)	5.0	5.0	5.0	5.0	5.0		5.0	5.0		5.0	5.0	5.0
Minimum Split (s)	22.5	22.5	22.5	22.5	22.5		9.5	22.5		9.5	22.5	22.5
Total Split (s)	27.0	27.0	27.0	18.0	18.0		9.5	65.4		9.6	65.5	65.5
Total Split (%)	22.5%	22.5%	22.5%	15.0%	15.0%		7.9%	54.5%		8.0%	54.6%	54.6%
Yellow Time (s)	3.5	3.5	3.5	3.5	3.5		3.5	3.5		3.5	3.5	3.5
All-Red Time (s)	1.0	1.0	1.0	1.0	1.0		1.0	1.0		1.0	1.0	1.0
Lost Time Adjust (s)	0.0	0.0	0.0		0.0		0.0	0.0		0.0	0.0	0.0
Total Lost Time (s)	4.5	4.5	4.5		4.5		4.5	4.5		4.5	4.5	4.5
Lead/Lag	Lead	Lead	Lead	Lag	Lag		Lead	Lag		Lead	Lag	Lag
Lead-Lag Optimize?	Yes	Yes	Yes	Yes	Yes		Yes	Yes		Yes	Yes	Yes
Recall Mode	None	None	None	None	None		None	C-Max		None	C-Max	C-Max
Act Effct Green (s)	16.9	16.9	16.9		8.1		80.9	76.9		79.8	74.7	74.7
Actuated g/C Ratio	0.14	0.14	0.14		0.07		0.67	0.64		0.66	0.62	0.62
v/c Ratio	0.69	0.69	0.23		0.45		0.26	0.63		0.09	0.94	0.28
Control Delay	63.4	63.4	5.3		40.5		12.4	19.7		8.7	40.7	6.2
Queue Delay	0.0	0.0	0.0		0.0		0.0	0.0		0.0	0.0	0.0
Total Delay	63.4	63.4	5.3		40.5		12.4	19.7		8.7	40.7	6.2
LOS	E	E	A		D		B	B		A	D	A
Approach Delay		53.6			40.5			19.3			32.9	
Approach LOS		D			D			B			C	
Queue Length 50th (ft)	128	128	0		24		9	367		7	790	36
Queue Length 95th (ft)	183	183	15		63		25	567		21	#1144	86
Internal Link Dist (ft)		297			340			439			514	
Turn Bay Length (ft)	200									200		
Base Capacity (vph)	315	315	352		215		155	1188		362	1160	1043
Starvation Cap Reductn	0	0	0		0		0	0		0	0	0
Spillback Cap Reductn	0	0	0		0		0	0		0	0	0
Storage Cap Reductn	0	0	0		0		0	0		0	0	0
Reduced v/c Ratio	0.52	0.52	0.19		0.29		0.26	0.63		0.09	0.94	0.28

Timings
1: Lohman Ford & Dawn Drive

2026 Build Mitigation
Timing Plan: PM

Intersection Summary	
Cycle Length: 120	
Actuated Cycle Length: 120	
Offset: 0 (0%), Referenced to phase 2:NBTL and 6:SBTL, Start of Green	
Natural Cycle: 140	
Control Type: Actuated-Coordinated	
Maximum v/c Ratio: 0.94	
Intersection Signal Delay: 32.1	Intersection LOS: C
Intersection Capacity Utilization 70.8%	ICU Level of Service C
Analysis Period (min) 15	

95th percentile volume exceeds capacity, queue may be longer.
Queue shown is maximum after two cycles.

Splits and Phases: 1: Lohman Ford & Dawn Drive

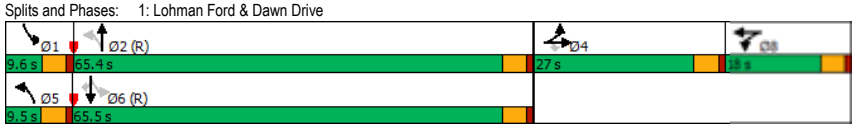

Timings
2: Lohman Ford Road & Boggy Ford Rd/Shoreline Ranch Dr

2026 Build Mitigation
Timing Plan: PM

Lane Group	EBL	EBT	EBR	WBL	WBT	WBR	NBL	NBT	NBR	SBL	SBT	SBR
Lane Configurations												
Traffic Volume (vph)	340	29	25	18	24	150	26	195	34	204	222	517
Future Volume (vph)	340	29	25	18	24	150	26	195	34	204	222	517
Lane Util. Factor	0.95	0.95	1.00	1.00	1.00	1.00	1.00	1.00	1.00	1.00	1.00	1.00
Frt		0.981				0.850		0.982				0.850
Flt Protected	0.950	0.965			0.979			0.995			0.977	
Satd. Flow (prot)	1681	1671	0	0	1824	1538	0	1794	0	0	1778	1583
Flt Permitted	0.727	0.756			0.823			0.939			0.740	
Satd. Flow (perm)	1287	1309	0	0	1533	1538	0	1693	0	0	1347	1583
Satd. Flow (RTOR)		18				163		27				562
Peak Hour Factor	0.92	0.92	0.92	0.92	0.92	0.92	0.92	0.92	0.92	0.92	0.92	0.92
Heavy Vehicles (%)	2%	2%	4%	2%	2%	5%	9%	3%	2%	7%	2%	2%
Adj. Flow (vph)	370	32	27	20	26	163	28	212	37	222	241	562
Shared Lane Traffic (%)	42%											
Lane Group Flow (vph)	215	214	0	0	46	163	0	277	0	0	463	562
Turn Type	Perm	NA		Perm	NA	Perm	Perm	NA		Perm	NA	Perm
Protected Phases		4			8			2			6	
Permitted Phases	4			8		8	2			6		6
Detector Phase	4	4		8	8	8	2	2		6	6	6
Switch Phase												
Minimum Initial (s)	5.0	5.0		5.0	5.0	5.0	5.0	5.0		5.0	5.0	5.0
Minimum Split (s)	22.5	22.5		22.5	22.5	22.5	22.5	22.5		22.5	22.5	22.5
Total Split (s)	16.1	16.1		16.1	16.1	16.1	24.0	24.0		24.0	24.0	24.0
Total Split (%)	40.1%	40.1%		40.1%	40.1%	40.1%	59.9%	59.9%		59.9%	59.9%	59.9%
Yellow Time (s)	3.5	3.5		3.5	3.5	3.5	3.5	3.5		3.5	3.5	3.5
All-Red Time (s)	1.0	1.0		1.0	1.0	1.0	1.0	1.0		1.0	1.0	1.0
Lost Time Adjust (s)	0.0	0.0			0.0	0.0		0.0			0.0	0.0
Total Lost Time (s)	4.5	4.5			4.5	4.5		4.5			4.5	4.5
Lead/Lag												
Lead-Lag Optimize?												
Recall Mode	None	None		None	None	None	C-Max	C-Max		C-Max	C-Max	C-Max
Act Effct Green (s)	10.2	10.2			10.2	10.2		20.9			20.9	20.9
Actuated g/C Ratio	0.25	0.25			0.25	0.25		0.52			0.52	0.52
v/c Ratio	0.66	0.62			0.12	0.32		0.31			0.66	0.51
Control Delay	24.0	20.1			11.5	4.6		6.7			14.6	2.7
Queue Delay	0.0	0.0			0.0	0.0		0.0			0.0	0.0
Total Delay	24.0	20.1			11.5	4.6		6.7			14.6	2.7
LOS	C	C			B	A		A			B	A
Approach Delay		22.0			6.1			6.7			8.1	
Approach LOS		C			A			A			A	
Queue Length 50th (ft)	42	37			7	0		30			72	0
Queue Length 95th (ft)	#112	#91			23	29		63			#196	34
Internal Link Dist (ft)		148			424			364			233	
Turn Bay Length (ft)	200					100						135
Base Capacity (vph)	372	391			443	560		893			700	1093
Starvation Cap Reductn	0	0			0	0		0			0	0
Spillback Cap Reductn	0	0			0	0		0			0	0
Storage Cap Reductn	0	0			0	0		0			0	0
Reduced v/c Ratio	0.58	0.55			0.10	0.29		0.31			0.66	0.51

Timings
2: Lohman Ford Road & Boggy Ford Rd/Shoreline Ranch Dr

2026 Build Mitigation
Timing Plan: PM

Intersection Summary	
Cycle Length: 40.1	
Actuated Cycle Length: 40.1	
Offset: 0 (0%), Referenced to phase 2:NBTL and 6:SBTL, Start of Green	
Natural Cycle: 55	
Control Type: Actuated-Coordinated	
Maximum v/c Ratio: 0.66	
Intersection Signal Delay: 10.8	Intersection LOS: B
Intersection Capacity Utilization 65.6%	ICU Level of Service C
Analysis Period (min) 15	

95th percentile volume exceeds capacity, queue may be longer.
Queue shown is maximum after two cycles.

Splits and Phases: 2: Lohman Ford Road & Boggy Ford Rd/Shoreline Ranch Dr

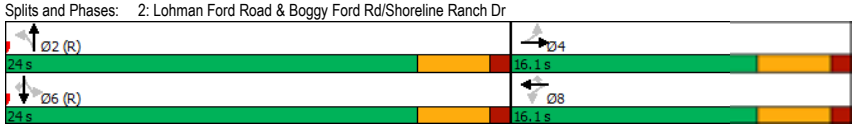

HCM 6th Signalized Intersection Summary
1: Lohman Ford & Dawn Drive

2026 Build w Hotel Conference
Timing Plan: AM

Movement	EBL	EBT	EBR	WBL	WBT	WBR	NBL	NBT	NBR	SBL	SBT	SBR
Lane Configurations												
Traffic Volume (veh/h)	312	11	55	19	6	36	31	953	22	15	695	143
Future Volume (veh/h)	312	11	55	19	6	36	31	953	22	15	695	143
Initial Q (Qb), veh	0	0	0	0	0	0	0	0	0	0	0	0
Ped-Bike Adj(A_pbT)	1.00		1.00	1.00		1.00	1.00		1.00	1.00		1.00
Parking Bus, Adj	1.00	1.00	1.00	1.00	1.00	1.00	1.00	1.00	1.00	1.00	1.00	1.00
Work Zone On Approach		No			No			No			No	
Adj Sat Flow, veh/h/ln	1870	1767	1870	1811	1648	1870	1870	1856	1870	1870	1856	1841
Adj Flow Rate, veh/h	367	13	65	22	7	42	36	1121	26	18	818	168
Peak Hour Factor	0.85	0.85	0.85	0.85	0.85	0.85	0.85	0.85	0.85	0.85	0.85	0.85
Percent Heavy Veh, %	2	9	2	6	17	2	2	3	2	2	3	4
Cap, veh/h	303	11	295	22	7	43	185	921	21	105	924	777
Arrive On Green	0.19	0.19	0.19	0.05	0.05	0.05	0.03	0.51	0.51	0.02	0.50	0.50
Sat Flow, veh/h	1628	58	1585	455	145	869	1781	1806	42	1781	1856	1560
Grp Volume(v), veh/h	380	0	65	71	0	0	36	0	1147	18	818	168
Grp Sat Flow(s),veh/h/ln	1685	0	1585	1469	0	0	1781	0	1848	1781	1856	1560
Q Serve(g_s), s	19.0	0.0	3.5	4.9	0.0	0.0	1.0	0.0	52.0	0.5	40.4	6.2
Cycle Q Clear(g_c), s	19.0	0.0	3.5	4.9	0.0	0.0	1.0	0.0	52.0	0.5	40.4	6.2
Prop In Lane	0.97		1.00	0.31		0.59	1.00		0.02	1.00		1.00
Lane Grp Cap(c), veh/h	314	0	295	72	0	0	185	0	942	105	924	777
V/C Ratio(X)	1.21	0.00	0.22	0.99	0.00	0.00	0.19	0.00	1.22	0.17	0.89	0.22
Avail Cap(c_a), veh/h	314	0	295	72	0	0	216	0	942	158	924	777
HCM Platoon Ratio	1.00	1.00	1.00	1.00	1.00	1.00	1.00	1.00	1.00	1.00	1.00	1.00
Upstream Filter(I)	1.00	0.00	1.00	1.00	0.00	0.00	1.00	0.00	1.00	1.00	1.00	1.00
Uniform Delay (d), s/veh	41.5	0.0	35.2	48.5	0.0	0.0	20.1	0.0	25.0	24.6	23.0	14.4
Incr Delay (d2), s/veh	120.6	0.0	0.4	101.1	0.0	0.0	0.5	0.0	107.6	0.8	12.1	0.6
Initial Q Delay(d3),s/veh	0.0	0.0	0.0	0.0	0.0	0.0	0.0	0.0	0.0	0.0	0.0	0.0
%ile BackOfQ(50%),veh/ln	18.3	0.0	1.4	3.8	0.0	0.0	0.4	0.0	49.3	0.2	19.7	2.3
Unsig. Movement Delay, s/veh												
LnGrp Delay(d),s/veh	162.1	0.0	35.6	149.5	0.0	0.0	20.6	0.0	132.6	25.4	35.1	15.0
LnGrp LOS	F	A	D	F	A	A	C	A	F	C	D	B
Approach Vol, veh/h		445			71			1183			1004	
Approach Delay, s/veh		143.6			149.5			129.2			31.6	
Approach LOS		F			F			F			C	

Timer - Assigned Phs	1	2		4	5	6		8				
Phs Duration (G+Y+Rc), s	8.0	58.0		25.0	9.2	56.8		11.0				
Change Period (Y+Rc), s	6.0	6.0		6.0	6.0	6.0		6.0				
Max Green Setting (Gmax), s	5.0	49.0		19.0	5.0	49.0		5.0				
Max Q Clear Time (g_c+I1), s	2.5	54.0		21.0	3.0	42.4		6.9				
Green Ext Time (p_c), s	0.0	0.0		0.0	0.0	3.4		0.0				

Intersection Summary			
HCM 6th Ctrl Delay			95.8
HCM 6th LOS			F

Notes

User approved pedestrian interval to be less than phase max green.

HCM 6th Signalized Intersection Summary
2: Lohman Ford Road & Boggy Ford Rd/Shoreline Ranch Dr

2026 Build w Hotel Conference
Timing Plan: AM

Movement	EBL	EBT	EBR	WBL	WBT	WBR	NBL	NBT	NBR	SBL	SBT	SBR
Lane Configurations												
Traffic Volume (veh/h)	506	13	17	28	22	145	27	219	11	95	149	362
Future Volume (veh/h)	506	13	17	28	22	145	27	219	11	95	149	362
Initial Q (Qb), veh	0	0	0	0	0	0	0	0	0	0	0	0
Ped-Bike Adj(A_pbT)	1.00		1.00	1.00		1.00	1.00		1.00	1.00		1.00
Parking Bus, Adj	1.00	1.00	1.00	1.00	1.00	1.00	1.00	1.00	1.00	1.00	1.00	1.00
Work Zone On Approach		No			No			No			No	
Adj Sat Flow, veh/h/ln	1870	1411	1870	1870	1870	1870	1870	1870	1870	1811	1856	1870
Adj Flow Rate, veh/h	538	14	18	30	23	154	29	233	12	101	159	385
Peak Hour Factor	0.94	0.94	0.94	0.94	0.94	0.94	0.94	0.94	0.94	0.94	0.94	0.94
Percent Heavy Veh, %	2	33	2	2	2	2	2	2	2	6	3	2
Cap, veh/h	523	10	13	557	401	751	99	500	24	247	351	501
Arrive On Green	0.47	0.47	0.47	0.47	0.47	0.47	0.32	0.32	0.32	0.32	0.32	0.32
Sat Flow, veh/h	846	22	28	966	847	1585	91	1582	77	503	1112	1585
Grp Volume(v), veh/h	570	0	0	53	0	154	274	0	0	260	0	385
Grp Sat Flow(s),veh/h/ln	896	0	0	1813	0	1585	1750	0	0	1615	0	1585
Q Serve(g_s), s	26.1	0.0	0.0	0.0	0.0	3.2	0.0	0.0	0.0	0.0	0.0	12.5
Cycle Q Clear(g_c), s	27.0	0.0	0.0	0.9	0.0	3.2	6.8	0.0	0.0	6.4	0.0	12.5
Prop In Lane	0.94		0.03	0.57		1.00	0.11		0.04	0.39		1.00
Lane Grp Cap(c), veh/h	547	0	0	958	0	751	622	0	0	598	0	501
V/C Ratio(X)	1.04	0.00	0.00	0.06	0.00	0.21	0.44	0.00	0.00	0.43	0.00	0.77
Avail Cap(c_a), veh/h	547	0	0	958	0	751	622	0	0	598	0	501
HCM Platoon Ratio	1.00	1.00	1.00	1.00	1.00	1.00	1.00	1.00	1.00	1.00	1.00	1.00
Upstream Filter(I)	1.00	0.00	0.00	1.00	0.00	1.00	1.00	0.00	0.00	1.00	0.00	1.00
Uniform Delay (d), s/veh	18.4	0.0	0.0	8.1	0.0	8.7	15.7	0.0	0.0	15.5	0.0	17.6
Incr Delay (d2), s/veh	49.8	0.0	0.0	0.0	0.0	0.1	2.3	0.0	0.0	2.3	0.0	10.8
Initial Q Delay(d3),s/veh	0.0	0.0	0.0	0.0	0.0	0.0	0.0	0.0	0.0	0.0	0.0	0.0
%ile BackOfQ(50%),veh/ln	14.6	0.0	0.0	0.3	0.0	1.0	2.9	0.0	0.0	2.8	0.0	5.5
Unsig. Movement Delay, s/veh												
LnGrp Delay(d),s/veh	68.2	0.0	0.0	8.1	0.0	8.9	17.9	0.0	0.0	17.8	0.0	28.5
LnGrp LOS	F	A	A	A	A	A	B	A	A	B	A	C
Approach Vol, veh/h		570			207			274			645	
Approach Delay, s/veh		68.2			8.7			17.9			24.2	
Approach LOS		E			A			B			C	

Timer - Assigned Phs		2		4		6		8				
Phs Duration (G+Y+Rc), s		24.0		33.0		24.0		33.0				
Change Period (Y+Rc), s		6.0		6.0		6.0		6.0				
Max Green Setting (Gmax), s		18.0		27.0		18.0		27.0				
Max Q Clear Time (g_c+I1), s		8.8		29.0		14.5		5.2				
Green Ext Time (p_c), s		1.1		0.0		1.1		0.7				

Intersection Summary			
HCM 6th Ctrl Delay			36.1
HCM 6th LOS			D

Notes

User approved pedestrian interval to be less than phase max green.

HCM 6th TWSC
3: National Drive & Boggy Ford Road

2026 Build w Hotel Conference
Timing Plan: AM

Intersection	
Int Delay, s/veh	2

Movement	EBL	EBT	EBR	WBL	WBT	WBR	NBL	NBT	NBR	SBL	SBT	SBR
Lane Configurations												
Traffic Vol, veh/h	17	338	0	0	174	36	1	11	1	47	10	6
Future Vol, veh/h	17	338	0	0	174	36	1	11	1	47	10	6
Conflicting Peds, #/hr	0	0	0	0	0	0	0	0	0	0	0	0
Sign Control	Free	Free	Free	Free	Free	Free	Stop	Stop	Stop	Stop	Stop	Stop
RT Channelized	-	-	None	-	-	None	-	-	None	-	-	None
Storage Length	-	-	-	-	-	-	-	-	-	-	-	-
Veh in Median Storage, #	-	0	-	-	0	-	-	0	-	-	0	-
Grade, %	-	0	-	-	0	-	-	0	-	-	0	-
Peak Hour Factor	92	92	92	92	92	92	92	92	92	92	92	92
Heavy Vehicles, %	6	2	2	2	2	6	2	2	2	2	2	2
Mvmt Flow	18	367	0	0	189	39	1	12	1	51	11	7

Major/Minor	Major1			Major2			Minor1			Minor2		
Conflicting Flow All	228	0	0	367	0	0	621	631	367	619	612	209
Stage 1	-	-	-	-	-	-	403	403	-	209	209	-
Stage 2	-	-	-	-	-	-	218	228	-	410	403	-
Critical Hdwy	4.16	-	-	4.12	-	-	7.12	6.52	6.22	7.12	6.52	6.22
Critical Hdwy Stg 1	-	-	-	-	-	-	6.12	5.52	-	6.12	5.52	-
Critical Hdwy Stg 2	-	-	-	-	-	-	6.12	5.52	-	6.12	5.52	-
Follow-up Hdwy	2.254	-	-	2.218	-	-	3.518	4.018	3.318	3.518	4.018	3.318
Pot Cap-1 Maneuver	1317	-	-	1192	-	-	400	398	678	401	408	831
Stage 1	-	-	-	-	-	-	624	600	-	793	729	-
Stage 2	-	-	-	-	-	-	784	715	-	619	600	-
Platoon blocked, %		-	-		-	-						
Mov Cap-1 Maneuver	1317	-	-	1192	-	-	384	391	678	386	401	831
Mov Cap-2 Maneuver	-	-	-	-	-	-	384	391	-	386	401	-
Stage 1	-	-	-	-	-	-	613	590	-	780	729	-
Stage 2	-	-	-	-	-	-	766	715	-	595	590	-

Approach	EB	WB	NB	SB
HCM Control Delay, s	0.4	0	14.2	15.6
HCM LOS			B	C

Minor Lane/Major Mvmt	NBLn1	EBL	EBT	EBR	WBL	WBT	WBR	SBLn1
Capacity (veh/h)	404	1317	-	-	1192	-	-	409
HCM Lane V/C Ratio	0.035	0.014	-	-	-	-	-	0.167
HCM Control Delay (s)	14.2	7.8	0	-	0	-	-	15.6
HCM Lane LOS	B	A	A	-	A	-	-	C
HCM 95th %tile Q(veh)	0.1	0	-	-	0	-	-	0.6

HCM 6th TWSC
4: Boggy Ford & Driveway 1

2026 Build w Hotel Conference
Timing Plan: AM

Intersection	
Int Delay, s/veh	1.1

Movement	EBL	EBT	WBT	WBR	SBL	SBR
Lane Configurations						
Traffic Vol, veh/h	19	367	243	168	42	5
Future Vol, veh/h	19	367	243	168	42	5
Conflicting Peds, #/hr	0	0	0	0	0	0
Sign Control	Free	Free	Free	Free	Stop	Stop
RT Channelized	-	None	-	None	-	None
Storage Length	-	-	-	-	0	-
Veh in Median Storage, #	-	0	0	-	0	-
Grade, %	-	0	0	-	0	-
Peak Hour Factor	92	92	92	92	92	92
Heavy Vehicles, %	2	2	2	2	2	2
Mvmt Flow	21	399	264	183	46	5

Major/Minor	Major1			Major2		Minor2	
Conflicting Flow All	447	0	-	0	797	356
Stage 1	-	-	-	-	356	-
Stage 2	-	-	-	-	441	-
Critical Hdwy	4.12	-	-	-	6.42	6.22
Critical Hdwy Stg 1	-	-	-	-	5.42	-
Critical Hdwy Stg 2	-	-	-	-	5.42	-
Follow-up Hdwy	2.218	-	-	-	3.518	3.318
Pot Cap-1 Maneuver	1113	-	-	-	356	688
Stage 1	-	-	-	-	709	-
Stage 2	-	-	-	-	648	-
Platoon blocked, %		-	-	-		
Mov Cap-1 Maneuver	1113	-	-	-	347	688
Mov Cap-2 Maneuver	-	-	-	-	347	-
Stage 1	-	-	-	-	692	-
Stage 2	-	-	-	-	648	-

Approach	EB	WB	SB
HCM Control Delay, s	0.4	0	16.4
HCM LOS			C

Minor Lane/Major Mvmt	EBL	EBT	WBT	WBR	SBLn1
Capacity (veh/h)	1113	-	-	-	366
HCM Lane V/C Ratio	0.019	-	-	-	0.14
HCM Control Delay (s)	8.3	0	-	-	16.4
HCM Lane LOS	A	A	-	-	C
HCM 95th %tile Q(veh)	0.1	-	-	-	0.5

HCM 6th Signalized Intersection Summary
1: Lohman Ford & Dawn Drive

2026 Build w Hotel Conference
Timing Plan: PM

Movement	EBL	EBT	EBR	WBL	WBT	WBR	NBL	NBT	NBR	SBL	SBT	SBR
Lane Configurations												
Traffic Volume (veh/h)	262	15	56	16	11	26	34	743	17	26	942	245
Future Volume (veh/h)	262	15	56	16	11	26	34	743	17	26	942	245
Initial Q (Qb), veh	0	0	0	0	0	0	0	0	0	0	0	0
Ped-Bike Adj(A_pbT)	1.00		1.00	1.00		1.00	1.00		1.00	1.00		1.00
Parking Bus, Adj	1.00	1.00	1.00	1.00	1.00	1.00	1.00	1.00	1.00	1.00	1.00	1.00
Work Zone On Approach		No			No			No			No	
Adj Sat Flow, veh/h/ln	1870	1796	1752	1870	1767	1841	1870	1870	1870	1841	1870	1856
Adj Flow Rate, veh/h	308	18	66	19	13	31	40	874	20	31	1108	288
Peak Hour Factor	0.85	0.85	0.85	0.85	0.85	0.85	0.85	0.85	0.85	0.85	0.85	0.85
Percent Heavy Veh, %	2	7	10	2	9	4	2	2	2	4	2	3
Cap, veh/h	265	15	243	22	15	36	123	992	23	191	1011	850
Arrive On Green	0.16	0.16	0.16	0.05	0.05	0.05	0.03	0.54	0.54	0.03	0.54	0.54
Sat Flow, veh/h	1621	95	1485	483	330	788	1781	1821	42	1753	1870	1572
Grp Volume(v), veh/h	326	0	66	63	0	0	40	0	894	31	1108	288
Grp Sat Flow(s),veh/h/ln	1715	0	1485	1601	0	0	1781	0	1863	1753	1870	1572
Q Serve(g_s), s	18.0	0.0	4.3	4.3	0.0	0.0	1.1	0.0	46.2	0.9	59.5	11.3
Cycle Q Clear(g_c), s	18.0	0.0	4.3	4.3	0.0	0.0	1.1	0.0	46.2	0.9	59.5	11.3
Prop In Lane	0.94		1.00	0.30		0.49	1.00		0.02	1.00		1.00
Lane Grp Cap(c), veh/h	281	0	243	73	0	0	123	0	1015	191	1011	850
V/C Ratio(X)	1.16	0.00	0.27	0.87	0.00	0.00	0.33	0.00	0.88	0.16	1.10	0.34
Avail Cap(c_a), veh/h	281	0	243	73	0	0	146	0	1015	222	1011	850
HCM Platoon Ratio	1.00	1.00	1.00	1.00	1.00	1.00	1.00	1.00	1.00	1.00	1.00	1.00
Upstream Filter(I)	1.00	0.00	1.00	1.00	0.00	0.00	1.00	0.00	1.00	1.00	1.00	1.00
Uniform Delay (d), s/veh	46.0	0.0	40.3	52.2	0.0	0.0	26.3	0.0	21.9	20.4	25.3	14.2
Incr Delay (d2), s/veh	104.7	0.0	0.6	62.1	0.0	0.0	1.5	0.0	10.9	0.4	58.2	1.1
Initial Q Delay(d3),s/veh	0.0	0.0	0.0	0.0	0.0	0.0	0.0	0.0	0.0	0.0	0.0	0.0
%ile BackOfQ(50%),veh/ln	15.8	0.0	1.6	3.0	0.0	0.0	0.6	0.0	22.0	0.3	40.9	4.2
Unsig. Movement Delay, s/veh												
LnGrp Delay(d),s/veh	150.7	0.0	40.9	114.3	0.0	0.0	27.9	0.0	32.8	20.8	83.4	15.3
LnGrp LOS	F	A	D	F	A	A	C	A	C	C	F	B
Approach Vol, veh/h		392			63			934			1427	
Approach Delay, s/veh		132.2			114.3			32.6			68.3	
Approach LOS		F			F			C			E	
Timer - Assigned Phs	1	2		4	5	6		8				
Phs Duration (G+Y+Rc), s	9.1	65.9		24.0	9.5	65.5		11.0				
Change Period (Y+Rc), s	6.0	6.0		6.0	6.0	6.0		6.0				
Max Green Setting (Gmax), s	5.0	58.0		18.0	5.0	58.0		5.0				
Max Q Clear Time (g_c+I1), s	2.9	48.2		20.0	3.1	61.5		6.3				
Green Ext Time (p_c), s	0.0	4.7		0.0	0.0	0.0		0.0				
Intersection Summary												
HCM 6th Ctrl Delay			66.4									
HCM 6th LOS			E									

Notes

User approved pedestrian interval to be less than phase max green.

HCM 6th Signalized Intersection Summary
2: Lohman Ford Road & Boggy Ford Rd/Shoreline Ranch Dr

2026 Build w Hotel Conference
Timing Plan: PM

Movement	EBL	EBT	EBR	WBL	WBT	WBR	NBL	NBT	NBR	SBL	SBT	SBR
Lane Configurations												
Traffic Volume (veh/h)	467	29	33	18	24	150	27	195	34	204	222	530
Future Volume (veh/h)	467	29	33	18	24	150	27	195	34	204	222	530
Initial Q (Qb), veh	0	0	0	0	0	0	0	0	0	0	0	0
Ped-Bike Adj(A_pbT)	1.00		1.00	1.00		1.00	1.00		1.00	1.00		1.00
Parking Bus, Adj	1.00	1.00	1.00	1.00	1.00	1.00	1.00	1.00	1.00	1.00	1.00	1.00
Work Zone On Approach		No			No			No			No	
Adj Sat Flow, veh/h/ln	1870	1870	1841	1870	1870	1826	1767	1856	1870	1796	1870	1870
Adj Flow Rate, veh/h	508	32	36	20	26	163	29	212	37	222	241	576
Peak Hour Factor	0.92	0.92	0.92	0.92	0.92	0.92	0.92	0.92	0.92	0.92	0.92	0.92
Percent Heavy Veh, %	2	2	4	2	2	5	9	3	2	7	2	2
Cap, veh/h	515	25	28	347	421	593	66	327	50	213	154	660
Arrive On Green	0.38	0.38	0.38	0.38	0.38	0.38	0.42	0.42	0.42	0.42	0.42	0.42
Sat Flow, veh/h	1048	66	74	682	1097	1547	0	786	121	298	370	1585
Grp Volume(v), veh/h	576	0	0	46	0	163	278	0	0	463	0	576
Grp Sat Flow(s),veh/h/ln	1188	0	0	1779	0	1547	906	0	0	668	0	1585
Q Serve(g_s), s	22.1	0.0	0.0	0.0	0.0	4.4	0.0	0.0	0.0	0.0	0.0	20.0
Cycle Q Clear(g_c), s	23.0	0.0	0.0	0.9	0.0	4.4	25.0	0.0	0.0	25.0	0.0	20.0
Prop In Lane	0.88		0.06	0.43		1.00	0.10		0.13	0.48		1.00
Lane Grp Cap(c), veh/h	568	0	0	768	0	593	444	0	0	367	0	660
V/C Ratio(X)	1.01	0.00	0.00	0.06	0.00	0.27	0.63	0.00	0.00	1.26	0.00	0.87
Avail Cap(c_a), veh/h	568	0	0	768	0	593	444	0	0	367	0	660
HCM Platoon Ratio	1.00	1.00	1.00	1.00	1.00	1.00	1.00	1.00	1.00	1.00	1.00	1.00
Upstream Filter(I)	1.00	0.00	0.00	1.00	0.00	1.00	1.00	0.00	0.00	1.00	0.00	1.00
Uniform Delay (d), s/veh	21.2	0.0	0.0	11.7	0.0	12.8	13.4	0.0	0.0	20.1	0.0	16.0
Incr Delay (d2), s/veh	41.2	0.0	0.0	0.0	0.0	0.2	6.5	0.0	0.0	137.9	0.0	14.8
Initial Q Delay(d3),s/veh	0.0	0.0	0.0	0.0	0.0	0.0	0.0	0.0	0.0	0.0	0.0	0.0
%ile BackOfQ(50%),veh/ln	14.3	0.0	0.0	0.4	0.0	1.4	3.0	0.0	0.0	19.1	0.0	8.9
Unsig. Movement Delay, s/veh												
LnGrp Delay(d),s/veh	62.3	0.0	0.0	11.7	0.0	13.0	19.9	0.0	0.0	158.0	0.0	30.8
LnGrp LOS	F	A	A	B	A	B	B	A	A	F	A	C
Approach Vol, veh/h		576			209			278			1039	
Approach Delay, s/veh		62.3			12.7			19.9			87.5	
Approach LOS		E			B			B			F	
Timer - Assigned Phs		2		4		6		8				
Phs Duration (G+Y+Rc), s		31.0		29.0		31.0		29.0				
Change Period (Y+Rc), s		6.0		6.0		6.0		6.0				
Max Green Setting (Gmax), s		25.0		23.0		25.0		23.0				
Max Q Clear Time (g_c+I1), s		27.0		25.0		27.0		6.4				
Green Ext Time (p_c), s		0.0		0.0		0.0		0.7				
Intersection Summary												
HCM 6th Ctrl Delay			64.2									
HCM 6th LOS			E									

HCM 6th TWSC
3: National Drive & Boggy Ford Road

2026 Build w Hotel Conference
Timing Plan: PM

Intersection	
Int Delay, s/veh	1.8

Movement	EBL	EBT	EBR	WBL	WBT	WBR	NBL	NBT	NBR	SBL	SBT	SBR
Lane Configurations												
Traffic Vol, veh/h	9	198	2	1	301	37	2	12	0	30	17	6
Future Vol, veh/h	9	198	2	1	301	37	2	12	0	30	17	6
Conflicting Peds, #/hr	0	0	0	0	0	0	0	0	0	0	0	0
Sign Control	Free	Free	Free	Free	Free	Free	Stop	Stop	Stop	Stop	Stop	Stop
RT Channelized	-	-	None	-	-	None	-	-	None	-	-	None
Storage Length	-	-	-	-	-	-	-	-	-	-	-	-
Veh in Median Storage, #	-	0	-	-	0	-	-	0	-	-	0	-
Grade, %	-	0	-	-	0	-	-	0	-	-	0	-
Peak Hour Factor	86	86	86	86	86	86	86	86	86	86	86	86
Heavy Vehicles, %	2	2	2	2	2	6	2	2	2	2	2	17
Mvmt Flow	10	230	2	1	350	43	2	14	0	35	20	7

Major/Minor	Major1			Major2			Minor1			Minor2		
Conflicting Flow All	393	0	0	232	0	0	638	646	231	632	626	372
Stage 1	-	-	-	-	-	-	251	251	-	374	374	-
Stage 2	-	-	-	-	-	-	387	395	-	258	252	-
Critical Hdwy	4.12	-	-	4.12	-	-	7.12	6.52	6.22	7.12	6.52	6.37
Critical Hdwy Stg 1	-	-	-	-	-	-	6.12	5.52	-	6.12	5.52	-
Critical Hdwy Stg 2	-	-	-	-	-	-	6.12	5.52	-	6.12	5.52	-
Follow-up Hdwy	2.218	-	-	2.218	-	-	3.518	4.018	3.318	3.518	4.018	3.453
Pot Cap-1 Maneuver	1166	-	-	1336	-	-	389	390	808	393	401	642
Stage 1	-	-	-	-	-	-	753	699	-	647	618	-
Stage 2	-	-	-	-	-	-	637	605	-	747	698	-
Platoon blocked, %		-	-		-	-						
Mov Cap-1 Maneuver	1166	-	-	1336	-	-	367	386	808	379	397	642
Mov Cap-2 Maneuver	-	-	-	-	-	-	367	386	-	379	397	-
Stage 1	-	-	-	-	-	-	745	692	-	641	617	-
Stage 2	-	-	-	-	-	-	609	604	-	725	691	-

Approach	EB	WB	NB	SB
HCM Control Delay, s	0.3	0	14.8	15.5
HCM LOS			B	C

Minor Lane/Major Mvmt	NBLn1	EBL	EBT	EBR	WBL	WBT	WBR	SBLn1
Capacity (veh/h)	383	1166	-	-	1336	-	-	404
HCM Lane V/C Ratio	0.043	0.009	-	-	0.001	-	-	0.153
HCM Control Delay (s)	14.8	8.1	0	-	7.7	0	-	15.5
HCM Lane LOS	B	A	A	-	A	A	-	C
HCM 95th %tile Q(veh)	0.1	0	-	-	0	-	-	0.5

HCM 6th TWSC
4: Boggy Ford & Driveway 1

2026 Build w Hotel Conference
Timing Plan: PM

Intersection	
Int Delay, s/veh	5.8

Movement	EBL	EBT	WBT	WBR	SBL	SBR
Lane Configurations						
Traffic Vol, veh/h	6	221	526	55	167	19
Future Vol, veh/h	6	221	526	55	167	19
Conflicting Peds, #/hr	0	0	0	0	0	0
Sign Control	Free	Free	Free	Free	Stop	Stop
RT Channelized	-	None	-	None	-	None
Storage Length	-	-	-	-	0	-
Veh in Median Storage, #	-	0	0	-	0	-
Grade, %	-	0	0	-	0	-
Peak Hour Factor	92	92	92	92	92	92
Heavy Vehicles, %	2	2	2	2	2	2
Mvmt Flow	7	240	572	60	182	21

Major/Minor	Major1		Major2		Minor2	
Conflicting Flow All	632	0	-	0	856	602
Stage 1	-	-	-	-	602	-
Stage 2	-	-	-	-	254	-
Critical Hdwy	4.12	-	-	-	6.42	6.22
Critical Hdwy Stg 1	-	-	-	-	5.42	-
Critical Hdwy Stg 2	-	-	-	-	5.42	-
Follow-up Hdwy	2.218	-	-	-	3.518	3.318
Pot Cap-1 Maneuver	951	-	-	-	328	500
Stage 1	-	-	-	-	547	-
Stage 2	-	-	-	-	788	-
Platoon blocked, %		-	-	-		
Mov Cap-1 Maneuver	951	-	-	-	325	500
Mov Cap-2 Maneuver	-	-	-	-	325	-
Stage 1	-	-	-	-	543	-
Stage 2	-	-	-	-	788	-

Approach	EB	WB	SB
HCM Control Delay, s	0.2	0	30.5
HCM LOS			D

Minor Lane/Major Mvmt	EBL	EBT	WBT	WBR	SBLn1
Capacity (veh/h)	951	-	-	-	337
HCM Lane V/C Ratio	0.007	-	-	-	0.6
HCM Control Delay (s)	8.8	0	-	-	30.5
HCM Lane LOS	A	A	-	-	D
HCM 95th %tile Q(veh)	0	-	-	-	3.7

Timings
1: Lohman Ford & Dawn Drive

2026 Build w Hotel Conference Mitigation
Timing Plan: AM

Lane Group	EBL	EBT	EBR	WBL	WBT	WBR	NBL	NBT	NBR	SBL	SBT	SBR
Lane Configurations												
Traffic Volume (vph)	312	11	55	19	6	36	31	953	22	15	695	143
Future Volume (vph)	312	11	55	19	6	36	31	953	22	15	695	143
Lane Util. Factor	0.95	0.95	1.00	1.00	1.00	1.00	1.00	1.00	1.00	1.00	1.00	1.00
Frt			0.850		0.920			0.997				0.850
Flt Protected	0.950	0.956			0.985		0.950			0.950		
Satd. Flow (prot)	1681	1684	1583	0	1644	0	1770	1840	0	1770	1845	1553
Flt Permitted	0.950	0.956			0.985		0.184			0.055		
Satd. Flow (perm)	1681	1684	1583	0	1644	0	343	1840	0	102	1845	1553
Satd. Flow (RTOR)			95		42			1				130
Peak Hour Factor	0.85	0.85	0.85	0.85	0.85	0.85	0.85	0.85	0.85	0.85	0.85	0.85
Heavy Vehicles (%)	2%	9%	2%	6%	17%	2%	2%	3%	2%	2%	3%	4%
Adj. Flow (vph)	367	13	65	22	7	42	36	1121	26	18	818	168
Shared Lane Traffic (%)	48%											
Lane Group Flow (vph)	191	189	65	0	71	0	36	1147	0	18	818	168
Turn Type	Split	NA	Perm	Split	NA		pm+pt	NA		pm+pt	NA	Perm
Protected Phases	4	4		8	8		5	2		1	6	
Permitted Phases			4				2			6		6
Detector Phase	4	4	4	8	8		5	2		1	6	6
Switch Phase												
Minimum Initial (s)	5.0	5.0	5.0	5.0	5.0		5.0	5.0		5.0	5.0	5.0
Minimum Split (s)	22.5	22.5	22.5	22.5	22.5		9.5	22.5		9.5	22.5	22.5
Total Split (s)	26.0	26.0	26.0	22.5	22.5		9.5	62.0		9.5	62.0	62.0
Total Split (%)	21.7%	21.7%	21.7%	18.8%	18.8%		7.9%	51.7%		7.9%	51.7%	51.7%
Yellow Time (s)	3.5	3.5	3.5	3.5	3.5		3.5	3.5		3.5	3.5	3.5
All-Red Time (s)	1.0	1.0	1.0	1.0	1.0		1.0	1.0		1.0	1.0	1.0
Lost Time Adjust (s)	0.0	0.0	0.0		0.0		0.0	0.0		0.0	0.0	0.0
Total Lost Time (s)	4.5	4.5	4.5		4.5		4.5	4.5		4.5	4.5	4.5
Lead/Lag	Lead	Lead	Lead	Lag	Lag		Lead	Lag		Lead	Lag	Lag
Lead-Lag Optimize?	Yes	Yes	Yes	Yes	Yes		Yes	Yes		Yes	Yes	Yes
Recall Mode	None	None	None	None	None		None	C-Max		None	C-Max	C-Max
Act Effct Green (s)	18.0	18.0	18.0		8.0		81.0	78.1		79.5	75.7	75.7
Actuated g/C Ratio	0.15	0.15	0.15		0.07		0.68	0.65		0.66	0.63	0.63
v/c Ratio	0.76	0.75	0.21		0.48		0.12	0.96		0.12	0.70	0.16
Control Delay	67.8	67.1	4.9		36.4		9.1	40.6		10.1	22.9	4.5
Queue Delay	0.0	0.0	0.0		0.0		0.0	0.0		0.0	0.0	0.0
Total Delay	67.8	67.1	4.9		36.4		9.1	40.6		10.1	22.9	4.5
LOS	E	E	A		D		A	D		B	C	A
Approach Delay		58.3			36.4			39.7			19.6	
Approach LOS		E			D			D			B	
Queue Length 50th (ft)	149	148	0		22		9	717		4	456	12
Queue Length 95th (ft)	216	213	14		62		23	#1232		14	668	44
Internal Link Dist (ft)		297			340			439			514	
Turn Bay Length (ft)	200									200		
Base Capacity (vph)	301	301	361		282		307	1198		150	1163	1027
Starvation Cap Reductn	0	0	0		0		0	0		0	0	0
Spillback Cap Reductn	0	0	0		0		0	0		0	0	0
Storage Cap Reductn	0	0	0		0		0	0		0	0	0
Reduced v/c Ratio	0.63	0.63	0.18		0.25		0.12	0.96		0.12	0.70	0.16

Timings
1: Lohman Ford & Dawn Drive

2026 Build w Hotel Conference Mitigation
Timing Plan: AM

Intersection Summary	
Cycle Length: 120	
Actuated Cycle Length: 120	
Offset: 0 (0%), Referenced to phase 2:NBTL and 6:SBTL, Start of Green	
Natural Cycle: 150	
Control Type: Actuated-Coordinated	
Maximum v/c Ratio: 0.96	
Intersection Signal Delay: 35.2	Intersection LOS: D
Intersection Capacity Utilization 74.6%	ICU Level of Service D
Analysis Period (min) 15	
# 95th percentile volume exceeds capacity, queue may be longer.	
Queue shown is maximum after two cycles.	

Splits and Phases: 1: Lohman Ford & Dawn Drive

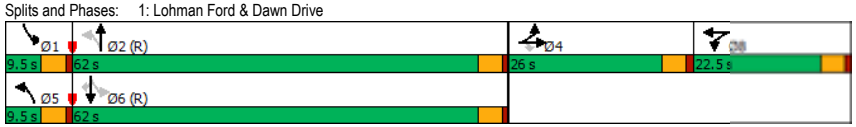

Lane Group	EBL	EBT	EBR	WBL	WBT	WBR	NBL	NBT	NBR	SBL	SBT	SBR
Lane Configurations												
Traffic Volume (vph)	506	13	17	28	22	145	27	219	11	95	149	362
Future Volume (vph)	506	13	17	28	22	145	27	219	11	95	149	362
Lane Util. Factor	1.00	1.00	1.00	1.00	1.00	1.00	1.00	1.00	1.00	1.00	1.00	1.00
Frt		0.916				0.850		0.994				0.850
Flt Protected	0.950				0.972			0.995			0.981	
Satd. Flow (prot)	1770	1506	0	0	1811	1583	0	1842	0	0	1789	1568
Flt Permitted	0.722				0.873			0.939			0.769	
Satd. Flow (perm)	1345	1506	0	0	1626	1583	0	1739	0	0	1403	1568
Satd. Flow (RTOR)		18				154		5				385
Peak Hour Factor	0.94	0.94	0.94	0.94	0.94	0.94	0.94	0.94	0.94	0.94	0.94	0.94
Heavy Vehicles (%)	2%	33%	2%	2%	2%	2%	2%	2%	2%	6%	3%	3%
Adj. Flow (vph)	538	14	18	30	23	154	29	233	12	101	159	385
Shared Lane Traffic (%)												
Lane Group Flow (vph)	538	32	0	0	53	154	0	274	0	0	260	385
Turn Type	Perm	NA		Perm	NA	Perm	Perm	NA		Perm	NA	Perm
Protected Phases		4			8			2			6	
Permitted Phases	4			8		8	2			6		6
Detector Phase	4	4		8	8	8	2	2		6	6	6
Switch Phase												
Minimum Initial (s)	5.0	5.0		5.0	5.0	5.0	5.0	5.0		5.0	5.0	5.0
Minimum Split (s)	24.0	24.0		24.0	24.0	24.0	24.0	24.0		24.0	24.0	24.0
Total Split (s)	30.0	30.0		30.0	30.0	30.0	20.0	20.0		20.0	20.0	20.0
Total Split (%)	60.0%	60.0%		60.0%	60.0%	60.0%	40.0%	40.0%		40.0%	40.0%	40.0%
Yellow Time (s)	4.0	4.0		4.0	4.0	4.0	4.0	4.0		4.0	4.0	4.0
All-Red Time (s)	2.0	2.0		2.0	2.0	2.0	2.0	2.0		2.0	2.0	2.0
Lost Time Adjust (s)	0.0	0.0			0.0	0.0		0.0			0.0	0.0
Total Lost Time (s)	6.0	6.0			6.0	6.0		6.0			6.0	6.0
Lead/Lag												
Lead-Lag Optimize?												
Recall Mode	None	None		None	None	None	C-Max	C-Max		C-Max	C-Max	C-Max
Act Effct Green (s)	22.5	22.5			22.5	22.5		15.5			15.5	15.5
Actuated g/C Ratio	0.45	0.45			0.45	0.45		0.31			0.31	0.31
v/c Ratio	0.89	0.05			0.07	0.19		0.51			0.60	0.51
Control Delay	32.5	4.9			7.4	2.4		18.7			23.5	4.9
Queue Delay	0.0	0.0			0.0	0.0		0.0			0.0	0.0
Total Delay	32.5	4.9			7.4	2.4		18.7			23.5	4.9
LOS	C	A			A	A		B			C	A
Approach Delay		31.0			3.6			18.7			12.4	
Approach LOS		C			A			B			B	
Queue Length 50th (ft)	125	2			8	0		66			67	0
Queue Length 95th (ft)	#290	12			21	21		127			#154	50
Internal Link Dist (ft)		148			424			364			233	
Turn Bay Length (ft)	200					100						135
Base Capacity (vph)	645	732			780	839		542			434	751
Starvation Cap Reductn	0	0			0	0		0			0	0
Spillback Cap Reductn	0	0			0	0		0			0	0
Storage Cap Reductn	0	0			0	0		0			0	0
Reduced v/c Ratio	0.83	0.04			0.07	0.18		0.51			0.60	0.51

Intersection Summary	
Cycle Length: 50	
Actuated Cycle Length: 50	
Offset: 0 (0%), Referenced to phase 2:NBTL and 6:SBTL, Start of Green	
Natural Cycle: 60	
Control Type: Actuated-Coordinated	
Maximum v/c Ratio: 0.89	
Intersection Signal Delay: 18.6	Intersection LOS: B
Intersection Capacity Utilization 76.5%	ICU Level of Service D
Analysis Period (min) 15	

95th percentile volume exceeds capacity, queue may be longer.
Queue shown is maximum after two cycles.

Splits and Phases: 2: Lohman Ford Road & Boggy Ford Rd/Shoreline Ranch Dr

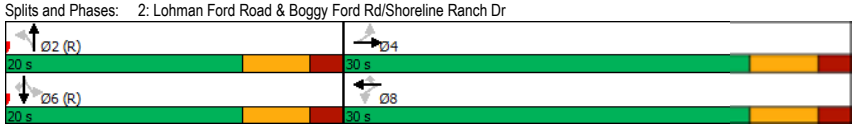

HCM 6th TWSC
3: National Drive & Boggy Ford Road

2026 Build w Hotel Conference Mitigation
Timing Plan: AM

Intersection	
Int Delay, s/veh	2

Movement	EBL	EBT	EBR	WBL	WBT	WBR	NBL	NBT	NBR	SBL	SBT	SBR
Lane Configurations												
Traffic Vol, veh/h	17	338	0	0	174	36	1	11	1	47	10	6
Future Vol, veh/h	17	338	0	0	174	36	1	11	1	47	10	6
Conflicting Peds, #/hr	0	0	0	0	0	0	0	0	0	0	0	0
Sign Control	Free	Free	Free	Free	Free	Free	Stop	Stop	Stop	Stop	Stop	Stop
RT Channelized	-	-	None	-	-	None	-	-	None	-	-	None
Storage Length	-	-	-	-	-	-	-	-	-	-	-	-
Veh in Median Storage, #	-	0	-	-	0	-	-	0	-	-	0	-
Grade, %	-	0	-	-	0	-	-	0	-	-	0	-
Peak Hour Factor	92	92	92	92	92	92	92	92	92	92	92	92
Heavy Vehicles, %	6	2	2	2	2	6	2	2	2	2	2	2
Mvmt Flow	18	367	0	0	189	39	1	12	1	51	11	7

Major/Minor	Major1			Major2			Minor1			Minor2		
Conflicting Flow All	228	0	0	367	0	0	621	631	367	619	612	209
Stage 1	-	-	-	-	-	-	403	403	-	209	209	-
Stage 2	-	-	-	-	-	-	218	228	-	410	403	-
Critical Hdwy	4.16	-	-	4.12	-	-	7.12	6.52	6.22	7.12	6.52	6.22
Critical Hdwy Stg 1	-	-	-	-	-	-	6.12	5.52	-	6.12	5.52	-
Critical Hdwy Stg 2	-	-	-	-	-	-	6.12	5.52	-	6.12	5.52	-
Follow-up Hdwy	2.254	-	-	2.218	-	-	3.518	4.018	3.318	3.518	4.018	3.318
Pot Cap-1 Maneuver	1317	-	-	1192	-	-	400	398	678	401	408	831
Stage 1	-	-	-	-	-	-	624	600	-	793	729	-
Stage 2	-	-	-	-	-	-	784	715	-	619	600	-
Platoon blocked, %		-	-		-	-						
Mov Cap-1 Maneuver	1317	-	-	1192	-	-	384	391	678	386	401	831
Mov Cap-2 Maneuver	-	-	-	-	-	-	384	391	-	386	401	-
Stage 1	-	-	-	-	-	-	613	590	-	780	729	-
Stage 2	-	-	-	-	-	-	766	715	-	595	590	-

Approach	EB	WB	NB	SB
HCM Control Delay, s	0.4	0	14.2	15.6
HCM LOS			B	C

Minor Lane/Major Mvmt	NBLn1	EBL	EBT	EBR	WBL	WBT	WBR	SBLn1
Capacity (veh/h)	404	1317	-	-	1192	-	-	409
HCM Lane V/C Ratio	0.035	0.014	-	-	-	-	-	0.167
HCM Control Delay (s)	14.2	7.8	0	-	0	-	-	15.6
HCM Lane LOS	B	A	A	-	A	-	-	C
HCM 95th %tile Q(veh)	0.1	0	-	-	0	-	-	0.6

HCM 6th TWSC
4: Boggy Ford & Driveway 1

2026 Build w Hotel Conference Mitigation
Timing Plan: AM

Intersection	
Int Delay, s/veh	1.1

Movement	EBL	EBT	WBT	WBR	SBL	SBR
Lane Configurations						
Traffic Vol, veh/h	19	367	243	168	42	5
Future Vol, veh/h	19	367	243	168	42	5
Conflicting Peds, #/hr	0	0	0	0	0	0
Sign Control	Free	Free	Free	Free	Stop	Stop
RT Channelized	-	None	-	None	-	None
Storage Length	-	-	-	-	0	-
Veh in Median Storage, #	-	0	0	-	0	-
Grade, %	-	0	0	-	0	-
Peak Hour Factor	92	92	92	92	92	92
Heavy Vehicles, %	2	2	2	2	2	2
Mvmt Flow	21	399	264	183	46	5

Major/Minor	Major1			Major2		Minor2	
Conflicting Flow All	447	0	-	0	797	356
Stage 1	-	-	-	-	356	-
Stage 2	-	-	-	-	441	-
Critical Hdwy	4.12	-	-	-	6.42	6.22
Critical Hdwy Stg 1	-	-	-	-	5.42	-
Critical Hdwy Stg 2	-	-	-	-	5.42	-
Follow-up Hdwy	2.218	-	-	-	3.518	3.318
Pot Cap-1 Maneuver	1113	-	-	-	356	688
Stage 1	-	-	-	-	709	-
Stage 2	-	-	-	-	648	-
Platoon blocked, %		-	-	-		
Mov Cap-1 Maneuver	1113	-	-	-	347	688
Mov Cap-2 Maneuver	-	-	-	-	347	-
Stage 1	-	-	-	-	692	-
Stage 2	-	-	-	-	648	-

Approach	EB	WB	SB
HCM Control Delay, s	0.4	0	16.4
HCM LOS			C

Minor Lane/Major Mvmt	EBL	EBT	WBT	WBR	SBLn1
Capacity (veh/h)	1113	-	-	-	366
HCM Lane V/C Ratio	0.019	-	-	-	0.14
HCM Control Delay (s)	8.3	0	-	-	16.4
HCM Lane LOS	A	A	-	-	C
HCM 95th %tile Q(veh)	0.1	-	-	-	0.5

Timings
1: Lohman Ford & Dawn Drive

2026 Build w Hotel Conference Mitigation
Timing Plan: PM

Lane Group	EBL	EBT	EBR	WBL	WBT	WBR	NBL	NBT	NBR	SBL	SBT	SBR
Lane Configurations												
Traffic Volume (vph)	262	15	56	16	11	26	34	743	17	26	942	245
Future Volume (vph)	262	15	56	16	11	26	34	743	17	26	942	245
Lane Util. Factor	0.95	0.95	1.00	1.00	1.00	1.00	1.00	1.00	1.00	1.00	1.00	1.00
Frt			0.850		0.934			0.997				0.850
Flt Protected	0.950	0.957			0.985		0.950			0.950		
Satd. Flow (prot)	1681	1684	1468	0	1674	0	1770	1857	0	1736	1863	1568
Flt Permitted	0.950	0.957			0.985		0.054			0.153		
Satd. Flow (perm)	1681	1684	1468	0	1674	0	101	1857	0	280	1863	1568
Satd. Flow (RTOR)			95		31			1				174
Peak Hour Factor	0.85	0.85	0.85	0.85	0.85	0.85	0.85	0.85	0.85	0.85	0.85	0.85
Heavy Vehicles (%)	2%	7%	10%	2%	9%	4%	2%	2%	2%	4%	2%	3%
Adj. Flow (vph)	308	18	66	19	13	31	40	874	20	31	1108	288
Shared Lane Traffic (%)	47%											
Lane Group Flow (vph)	163	163	66	0	63	0	40	894	0	31	1108	288
Turn Type	Split	NA	Perm	Split	NA		pm+pt	NA		pm+pt	NA	Perm
Protected Phases	4	4		8	8		5	2		1	6	
Permitted Phases			4				2			6		6
Detector Phase	4	4	4	8	8		5	2		1	6	6
Switch Phase												
Minimum Initial (s)	5.0	5.0	5.0	5.0	5.0		5.0	5.0		5.0	5.0	5.0
Minimum Split (s)	22.5	22.5	22.5	22.5	22.5		9.5	22.5		9.5	22.5	22.5
Total Split (s)	27.0	27.0	27.0	18.0	18.0		9.5	65.4		9.6	65.5	65.5
Total Split (%)	22.5%	22.5%	22.5%	15.0%	15.0%		7.9%	54.5%		8.0%	54.6%	54.6%
Yellow Time (s)	3.5	3.5	3.5	3.5	3.5		3.5	3.5		3.5	3.5	3.5
All-Red Time (s)	1.0	1.0	1.0	1.0	1.0		1.0	1.0		1.0	1.0	1.0
Lost Time Adjust (s)	0.0	0.0	0.0		0.0		0.0	0.0		0.0	0.0	0.0
Total Lost Time (s)	4.5	4.5	4.5		4.5		4.5	4.5		4.5	4.5	4.5
Lead/Lag	Lead	Lead	Lead	Lag	Lag		Lead	Lag		Lead	Lag	Lag
Lead-Lag Optimize?	Yes	Yes	Yes	Yes	Yes		Yes	Yes		Yes	Yes	Yes
Recall Mode	None	None	None	None	None		None	C-Max		None	C-Max	C-Max
Act Effct Green (s)	16.9	16.9	16.9		8.1		80.9	76.9		79.8	74.7	74.7
Actuated g/C Ratio	0.14	0.14	0.14		0.07		0.67	0.64		0.66	0.62	0.62
v/c Ratio	0.69	0.69	0.23		0.45		0.26	0.75		0.12	0.96	0.28
Control Delay	63.4	63.4	5.3		40.5		12.4	24.2		9.2	42.7	6.3
Queue Delay	0.0	0.0	0.0		0.0		0.0	0.0		0.0	0.0	0.0
Total Delay	63.4	63.4	5.3		40.5		12.4	24.2		9.2	42.7	6.3
LOS	E	E	A		D		B	C		A	D	A
Approach Delay		53.6			40.5			23.7			34.6	
Approach LOS		D			D			C			C	
Queue Length 50th (ft)	128	128	0		24		9	511		7	~824	37
Queue Length 95th (ft)	183	183	15		63		25	#835		21	#1166	88
Internal Link Dist (ft)		297			340			439			514	
Turn Bay Length (ft)	200									200		
Base Capacity (vph)	315	315	352		215		155	1189		261	1160	1041
Starvation Cap Reductn	0	0	0		0		0	0		0	0	0
Spillback Cap Reductn	0	0	0		0		0	0		0	0	0
Storage Cap Reductn	0	0	0		0		0	0		0	0	0
Reduced v/c Ratio	0.52	0.52	0.19		0.29		0.26	0.75		0.12	0.96	0.28

Timings
1: Lohman Ford & Dawn Drive

2026 Build w Hotel Conference Mitigation
Timing Plan: PM

Intersection Summary	
Cycle Length: 120	
Actuated Cycle Length: 120	
Offset: 0 (0%), Referenced to phase 2:NBTL and 6:SBTL, Start of Green	
Natural Cycle: 140	
Control Type: Actuated-Coordinated	
Maximum v/c Ratio: 0.96	
Intersection Signal Delay: 33.8	Intersection LOS: C
Intersection Capacity Utilization 71.4%	ICU Level of Service C
Analysis Period (min) 15	

~ Volume exceeds capacity, queue is theoretically infinite.
Queue shown is maximum after two cycles.

95th percentile volume exceeds capacity, queue may be longer.
Queue shown is maximum after two cycles.

Splits and Phases: 1: Lohman Ford & Dawn Drive

Lane Group	EBL	EBT	EBR	WBL	WBT	WBR	NBL	NBT	NBR	SBL	SBT	SBR
Lane Configurations												
Traffic Volume (vph)	467	29	33	18	24	150	27	195	34	204	222	530
Future Volume (vph)	467	29	33	18	24	150	27	195	34	204	222	530
Lane Util. Factor	0.95	0.95	1.00	1.00	1.00	1.00	1.00	1.00	1.00	1.00	1.00	1.00
Frt		0.981				0.850		0.982				0.850
Flt Protected	0.950	0.963			0.979			0.995			0.977	
Satd. Flow (prot)	1681	1668	0	0	1824	1538	0	1794	0	0	1778	1583
Flt Permitted	0.727	0.747			0.809			0.936			0.743	
Satd. Flow (perm)	1287	1294	0	0	1507	1538	0	1687	0	0	1352	1583
Satd. Flow (RTOR)		18				163		27				576
Peak Hour Factor	0.92	0.92	0.92	0.92	0.92	0.92	0.92	0.92	0.92	0.92	0.92	0.92
Heavy Vehicles (%)	2%	2%	4%	2%	2%	5%	9%	3%	2%	7%	2%	2%
Adj. Flow (vph)	508	32	36	20	26	163	29	212	37	222	241	576
Shared Lane Traffic (%)	43%											
Lane Group Flow (vph)	290	286	0	0	46	163	0	278	0	0	463	576
Turn Type	Perm	NA		Perm	NA	Perm	Perm	NA		Perm	NA	Perm
Protected Phases		4			8			2			6	
Permitted Phases	4			8		8	2			6		6
Detector Phase	4	4		8	8	8	2	2		6	6	6
Switch Phase												
Minimum Initial (s)	5.0	5.0		5.0	5.0	5.0	5.0	5.0		5.0	5.0	5.0
Minimum Split (s)	22.5	22.5		22.5	22.5	22.5	22.5	22.5		22.5	22.5	22.5
Total Split (s)	16.1	16.1		16.1	16.1	16.1	24.0	24.0		24.0	24.0	24.0
Total Split (%)	40.1%	40.1%		40.1%	40.1%	40.1%	59.9%	59.9%		59.9%	59.9%	59.9%
Yellow Time (s)	3.5	3.5		3.5	3.5	3.5	3.5	3.5		3.5	3.5	3.5
All-Red Time (s)	1.0	1.0		1.0	1.0	1.0	1.0	1.0		1.0	1.0	1.0
Lost Time Adjust (s)	0.0	0.0			0.0	0.0		0.0			0.0	0.0
Total Lost Time (s)	4.5	4.5			4.5	4.5		4.5			4.5	4.5
Lead/Lag												
Lead-Lag Optimize?												
Recall Mode	None	None		None	None	None	C-Max	C-Max		C-Max	C-Max	C-Max
Act Effct Green (s)	11.1	11.1			11.1	11.1		20.0			20.0	20.0
Actuated g/C Ratio	0.28	0.28			0.28	0.28		0.50			0.50	0.50
v/c Ratio	0.81	0.77			0.11	0.30		0.33			0.69	0.53
Control Delay	35.7	30.2			11.3	4.4		7.0			15.7	2.9
Queue Delay	0.0	0.0			0.0	0.0		0.0			0.0	0.0
Total Delay	35.7	30.2			11.3	4.4		7.0			15.7	2.9
LOS	D	C			B	A		A			B	A
Approach Delay		33.0			5.9			7.0			8.6	
Approach LOS		C			A			A			A	
Queue Length 50th (ft)	62	55			7	0		30			72	0
Queue Length 95th (ft)	#166	#158			24	29		64			#195	34
Internal Link Dist (ft)		148			424			364			233	
Turn Bay Length (ft)	200					100						135
Base Capacity (vph)	372	387			435	560		854			673	1077
Starvation Cap Reductn	0	0			0	0		0			0	0
Spillback Cap Reductn	0	0			0	0		0			0	0
Storage Cap Reductn	0	0			0	0		0			0	0
Reduced v/c Ratio	0.78	0.74			0.11	0.29		0.33			0.69	0.53

Intersection Summary	
Cycle Length: 40.1	
Actuated Cycle Length: 40.1	
Offset: 0 (0%), Referenced to phase 2:NBTL and 6:SBTL, Start of Green	
Natural Cycle: 50	
Control Type: Actuated-Coordinated	
Maximum v/c Ratio: 0.81	
Intersection Signal Delay: 14.8	Intersection LOS: B
Intersection Capacity Utilization 69.4%	ICU Level of Service C
Analysis Period (min) 15	

95th percentile volume exceeds capacity, queue may be longer.
Queue shown is maximum after two cycles.

Splits and Phases: 2: Lohman Ford Road & Boggy Ford Rd/Shoreline Ranch Dr

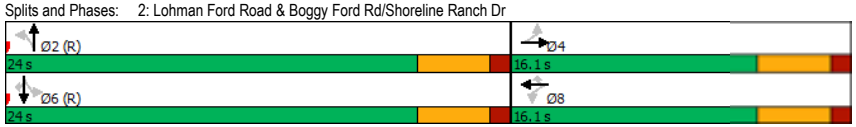

HCM 6th TWSC
3: National Drive & Boggy Ford Road

2026 Build w Hotel Conference Mitigation
Timing Plan: PM

Intersection	
Int Delay, s/veh	1.8

Movement	EBL	EBT	EBR	WBL	WBT	WBR	NBL	NBT	NBR	SBL	SBT	SBR
Lane Configurations												
Traffic Vol, veh/h	9	198	2	1	301	37	2	12	0	30	17	6
Future Vol, veh/h	9	198	2	1	301	37	2	12	0	30	17	6
Conflicting Peds, #/hr	0	0	0	0	0	0	0	0	0	0	0	0
Sign Control	Free	Free	Free	Free	Free	Free	Stop	Stop	Stop	Stop	Stop	Stop
RT Channelized	-	-	None	-	-	None	-	-	None	-	-	None
Storage Length	-	-	-	-	-	-	-	-	-	-	-	-
Veh in Median Storage, #	-	0	-	-	0	-	-	0	-	-	0	-
Grade, %	-	0	-	-	0	-	-	0	-	-	0	-
Peak Hour Factor	86	86	86	86	86	86	86	86	86	86	86	86
Heavy Vehicles, %	2	2	2	2	2	6	2	2	2	2	2	17
Mvmt Flow	10	230	2	1	350	43	2	14	0	35	20	7

Major/Minor	Major1			Major2			Minor1			Minor2		
Conflicting Flow All	393	0	0	232	0	0	638	646	231	632	626	372
Stage 1	-	-	-	-	-	-	251	251	-	374	374	-
Stage 2	-	-	-	-	-	-	387	395	-	258	252	-
Critical Hdwy	4.12	-	-	4.12	-	-	7.12	6.52	6.22	7.12	6.52	6.37
Critical Hdwy Stg 1	-	-	-	-	-	-	6.12	5.52	-	6.12	5.52	-
Critical Hdwy Stg 2	-	-	-	-	-	-	6.12	5.52	-	6.12	5.52	-
Follow-up Hdwy	2.218	-	-	2.218	-	-	3.518	4.018	3.318	3.518	4.018	3.453
Pot Cap-1 Maneuver	1166	-	-	1336	-	-	389	390	808	393	401	642
Stage 1	-	-	-	-	-	-	753	699	-	647	618	-
Stage 2	-	-	-	-	-	-	637	605	-	747	698	-
Platoon blocked, %		-	-		-	-						
Mov Cap-1 Maneuver	1166	-	-	1336	-	-	367	386	808	379	397	642
Mov Cap-2 Maneuver	-	-	-	-	-	-	367	386	-	379	397	-
Stage 1	-	-	-	-	-	-	745	692	-	641	617	-
Stage 2	-	-	-	-	-	-	609	604	-	725	691	-

Approach	EB	WB	NB	SB
HCM Control Delay, s	0.3	0	14.8	15.5
HCM LOS			B	C

Minor Lane/Major Mvmt	NBLn1	EBL	EBT	EBR	WBL	WBT	WBR	SBLn1
Capacity (veh/h)	383	1166	-	-	1336	-	-	404
HCM Lane V/C Ratio	0.043	0.009	-	-	0.001	-	-	0.153
HCM Control Delay (s)	14.8	8.1	0	-	7.7	0	-	15.5
HCM Lane LOS	B	A	A	-	A	A	-	C
HCM 95th %tile Q(veh)	0.1	0	-	-	0	-	-	0.5

HCM 6th TWSC
4: Boggy Ford & Driveway 1

2026 Build w Hotel Conference Mitigation
Timing Plan: PM

Intersection	
Int Delay, s/veh	5.8

Movement	EBL	EBT	WBT	WBR	SBL	SBR
Lane Configurations						
Traffic Vol, veh/h	6	221	526	55	167	19
Future Vol, veh/h	6	221	526	55	167	19
Conflicting Peds, #/hr	0	0	0	0	0	0
Sign Control	Free	Free	Free	Free	Stop	Stop
RT Channelized	-	None	-	None	-	None
Storage Length	-	-	-	-	0	-
Veh in Median Storage, #	-	0	0	-	0	-
Grade, %	-	0	0	-	0	-
Peak Hour Factor	92	92	92	92	92	92
Heavy Vehicles, %	2	2	2	2	2	2
Mvmt Flow	7	240	572	60	182	21

Major/Minor	Major1		Major2		Minor2	
Conflicting Flow All	632	0	-	0	856	602
Stage 1	-	-	-	-	602	-
Stage 2	-	-	-	-	254	-
Critical Hdwy	4.12	-	-	-	6.42	6.22
Critical Hdwy Stg 1	-	-	-	-	5.42	-
Critical Hdwy Stg 2	-	-	-	-	5.42	-
Follow-up Hdwy	2.218	-	-	-	3.518	3.318
Pot Cap-1 Maneuver	951	-	-	-	328	500
Stage 1	-	-	-	-	547	-
Stage 2	-	-	-	-	788	-
Platoon blocked, %		-	-	-		
Mov Cap-1 Maneuver	951	-	-	-	325	500
Mov Cap-2 Maneuver	-	-	-	-	325	-
Stage 1	-	-	-	-	543	-
Stage 2	-	-	-	-	788	-

Approach	EB	WB	SB
HCM Control Delay, s	0.2	0	30.5
HCM LOS			D

Minor Lane/Major Mvmt	EBL	EBT	WBT	WBR	SBLn1
Capacity (veh/h)	951	-	-	-	337
HCM Lane V/C Ratio	0.007	-	-	-	0.6
HCM Control Delay (s)	8.8	0	-	-	30.5
HCM Lane LOS	A	A	-	-	D
HCM 95th %tile Q(veh)	0	-	-	-	3.7

APPENDIX E. Original TIA Report

TRAFFIC IMPACT ANALYSIS

19708 BOGGY FORD ROAD DEVELOPMENT

City of Lago Vista, Texas
GBA No. 15563.00

January 15, 2023

GBA
9601 Amberglen Boulevard, Ste. 109
Austin, Texas 78729
www.gbateam.com

9601 Amberglen Blvd. #109
Austin, TX 78729

Table of Contents

Table of Contents 1
Project Purpose and Description 3
Project Study Area 6
Analysis Scenarios 6
Traffic Analysis Methods 7
Signalized Intersections 7
Unsignalized Intersections 8
Existing Conditions 9
Existing Roadway Network 9
Existing Intersection Volumes and Lane Configurations 12
Existing Intersection Levels of Service 12
Project Transportation Characteristics 16
Trip Generation Methodology 16
Proposed Trip Generation 16
Trip Distribution 17
Trip Assignment 17
Future Intersection Conditions 19
No-Build Intersection Volumes 19
Build Intersection Volumes 19
No-Build and Build Intersection Levels of Service 23
Intersection and Roadway Impacts 23
Recommendations And Mitigation Summary 28
Conclusion 33
Appendices 35

Table of Tables

Table 1 - Signalized Intersection Level of Service Definitions 7
Table 2 - Unsignalized Intersection Level of Service Definitions 8
Table 3 - Proposed Trip Generation 16
Table 4 - Proposed Trip Distribution 17
Table 5 - A.M. Peak Hour Intersection Analyses 29
Table 6 - P.M. Peak Hour Intersection Analyses 30

Table of Figures

Figure 1 - Project Location 4
Figure 2 - Proposed Site Plan 5
Figure 3 -Study Intersection Dimensions 10
Figure 4 -Study Intersection Dimensions 11
Figure 5 - Existing Traffic Volumes 13
Figure 6 - Existing Levels of Service A.M. Peak Hour 14
Figure 7 - Existing Levels of Service P.M. Peak Hour 15
Figure 8 - Proposed Site Volumes and Trip Distribution 18
Figure 9 - Background Project Locations 20
Figure 10 - Proposed No-Build Scenario Traffic Volumes 21
Figure 11 - Proposed Build Scenario Traffic Volumes 22
Figure 12 - No-Build Levels of Service A.M. Peak Hour 24
Figure 13 - No-Build Levels of Service P.M. Peak Hour 25
Figure 14 - Proposed Build Levels of Service A.M. Peak Hour 26
Figure 15 - Proposed Build Levels of Service P.M. Peak Hour 27
Figure 16 - Mitigated Levels of Service A.M. Peak Hour 31
Figure 17 - Mitigated Levels of Service P.M. Peak Hour 32

Project Purpose and Description

As requested, this traffic impact analysis (TIA) was prepared to analyze the potential impacts of the proposed 19708 Boggy Ford Road Development (Project) in Lago Vista, Texas. This report was produced in accordance with approved scope requirements and the guidelines for traffic impact analyses set forth in the City of Lago Vista, Texas Interim Growth Management Policy (Resolution 23-1996). The report includes an analysis of existing conditions, trip distribution and generation, analysis of future conditions, and analysis of potential mitigatory measures.

The Project site is located at 19708 Boggy Ford Road and is currently undeveloped. **Figure 1** shows the location of the development site, surrounding roadway network, and study intersections analyzed as a part of this traffic impact analysis.

The proposed development includes a 110-room hotel and a 3,800 square-foot restaurant. Access to the site is proposed to be provided from a single driveway located on Boggy Ford Road. The development is anticipated to be completed by the end of 2025. **Figure 2** shows the site plan for the Project.

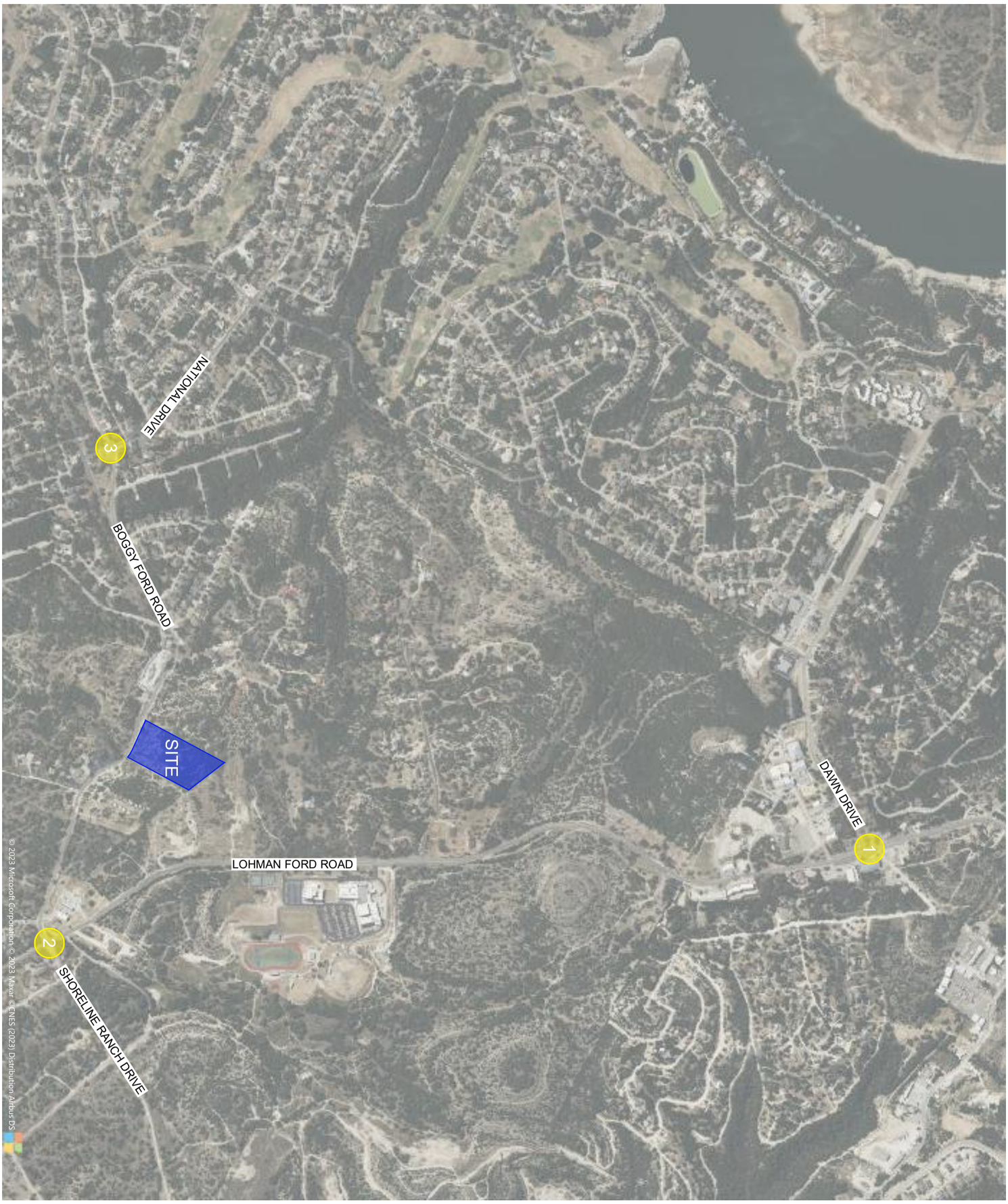

SCALE : 1 INCH = 1000 FEET

1000' 0' 1000' 2000'

GBA	PROJECT NUMBER 15563.00	BOGGY FORD DEVELOPMENT	FIGURE 1
	DATE 1/15/2024	PROJECT LOCATION	

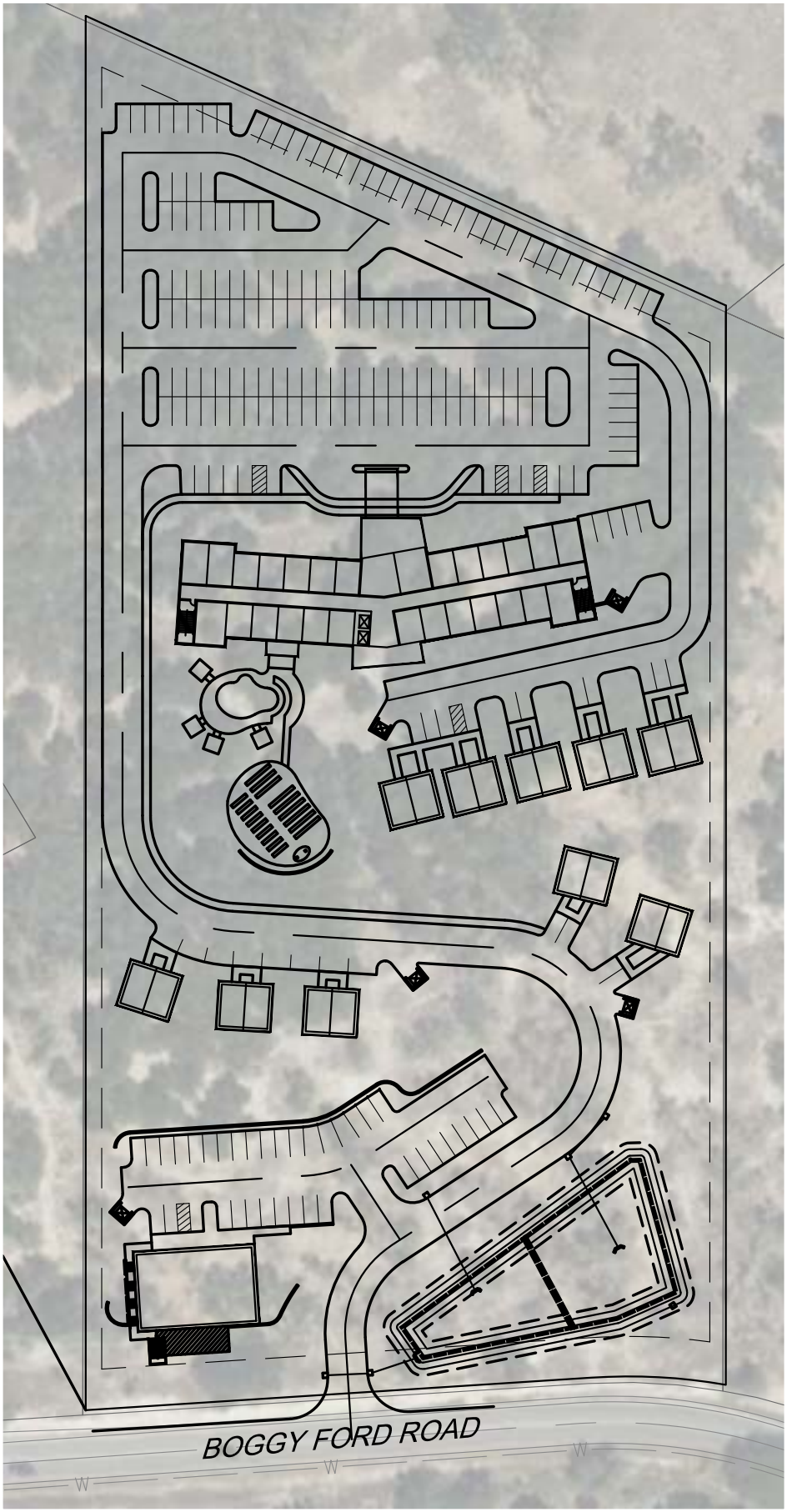

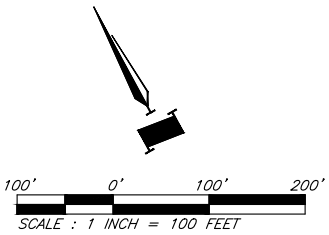

GBA

N

N.T.S.

PROJECT NUMBER #15563.00	BOGGY FORD DEVELOPMENT PROPOSED SITE PLAN	FIGURE 2
DATE 1/15/2024		

Project Study Area

Potential impacts on the surrounding roadway network were determined by analyzing the effect traffic from the proposed development would have on intersection operations during the A.M. and P.M. Peak Hours, when traffic volumes are typically highest.

As requested in consultation with the City of Lago Vista staff, three intersections were selected for analysis under existing and future traffic conditions. The intersections were selected as being the most likely to experience negative impacts associated with increased traffic from the proposed development, and are as follows:

1. Lohman Ford Road and Dawn Drive
2. Boggy Ford Road and Lohman Ford Road / Shoreline Ranch Drive
3. Boggy Ford Road and National Drive

Analysis Scenarios

The operations of the study intersections were evaluated during the weekday A.M. and P.M. Peak Hours for the following three scenarios:

1. Scenario 1 - Existing Conditions
    a. Existing volumes obtained from traffic counts collected on Wednesday, November 15, 2023.
2. Scenario 2 – No-Build Conditions (2025)
    a. Existing volumes plus traffic from growth for the year 2025, when the development is projected to be completed, plus background traffic from surrounding developments.
3. Scenario 3 - Build Conditions (2025)
    a. Scenario 2 (No-Build) volumes plus traffic generated by the proposed development.

Traffic Analysis Methods

Operational traffic analyses focus on intersections rather than roadway segments, due to capacity constraints typically experienced at intersections. The operational performance of a given roadway element is typically described with the term Level of Service (LOS). LOS is a qualitative description of operating conditions, ranging from LOS A (free-flow traffic conditions with little or no delay) to LOS F (oversaturated conditions where traffic flows exceed design capacity, resulting in long queues and delays). The LOS analysis methods outlined in the 6th Edition of the Highway Capacity Manual (HCM) were used in this study. The HCM methods for calculating LOS for signalized and unsignalized intersections are described below.

Signalized Intersections

Traffic operations at signalized intersections were evaluated using the LOS method described in Chapter 18 of the 6th Edition of the Highway Capacity Manual. The Synchro software package was used to model traffic conditions throughout the project study area. Synchro is a simulation tool that uses deterministic equations to evaluate operations at an intersection. A given signalized intersection's LOS is based on the weighted average control delay measured in seconds per vehicle. Control delay includes initial deceleration delay, queue move-up time (if multiple cycles are needed to clear the intersection), stopped delay, and final acceleration. **Table 1** summarizes the relationship between the control delay and LOS for signalized intersections.

Table 1 - Signalized Intersection Level of Service Definitions

Level of Service	Description	Average Control Delay (seconds)
A	Operations with very low delay occurring with good traffic signal progression and/or short cycle lengths.	< 10.0
B	Operations with low delay occurring with good progression and/or short cycle lengths.	10.1 to 20.0
C	Operations with average delays resulting from fair progression. Individual cycle failures begin to appear.	20.1 to 35.0
D	Operations with longer delays due to a combination of unfavorable progression, long cycle lengths, or high V/C ratios. Many vehicles stop and individual cycle failures are noticeable.	35.1 to 55.0
E	Operations with high delay values indicating poor progression, long cycle lengths, and high V/C ratios. Individual cycle failures are frequent occurrences. This is considered to be the limit of acceptable delay.	55.1 to 80.0
F	Operations with delays unacceptable to most drivers occurring due to over-saturation.	> 80.1

Source: *Highway Capacity Manual*, Transportation Research Board, 2016.

Unsignalized Intersections

In Chapters 19 and 20 of the Transportation Research Board's 2016 Highway Capacity Manual, the LOS for unsignalized intersections (two-way or all-way stop-controlled intersections) are also defined by the average control delay per vehicle. The total control delay incorporates delays associated with deceleration, acceleration, stopping, and moving up in the queue. For two-way stop-controlled intersections, delay is calculated for each stop-controlled movement and for the uncontrolled left-turn movements, if any, from the free-flow roadway.

The delay and LOS for the intersection as a whole and for the worst approach are reported for two-way stop-controlled intersections. **Table 2** summarizes the relationship between delay and LOS for unsignalized intersections.

Table 2 - Unsignalized Intersection Level of Service Definitions

Level of Service	Description	Average Control Delay Per Vehicle (Seconds)
A	Little or no delay.	≤ 10.0
B	Short traffic delays.	10.1 to 15.0
C	Average traffic delays.	15.1 to 25.0
D	Long traffic delays.	25.1 to 35.0
E	Very long traffic delays.	35.1 to 50.0
F	Extreme traffic delays with intersection capacity exceeded.	> 50.0

Source: *Highway Capacity Manual*, Transportation Research Board, 2016.

Existing Conditions

This section describes the existing conditions of the roadway network near the project site. It also presents existing traffic volumes and operations for the study intersections with the results of level of service calculations.

Existing Roadway Network

Regional vehicular access to the proposed development area is likely to be provided by FM 1431, while local access is provided by Lohman Ford Road, Boggy Ford Road, Dawn Drive and National Drive. The roadways are described as follows.

FM 1431 is a four-lane principal arterial undivided in most places with two-way left-turn lanes on some stretches that serves as the main thoroughfare through Lago Vista.

Lohman Ford Road serves as a principle arterial undivided through Lago Vista, providing access to FM 1431 from the residential areas. It is currently four lanes wide north of Dawn Drive and two lanes wide south of Dawn Drive. A location approximately 1000 ft south of the intersection with Travis Drive serves as a dividing point for the posted speed. North of the previously described location, the posted speed is 40 miles per hour (mph), while the posted speed is 50 mph to the south.

Boggy Ford Road is a two-lane minor arterial undivided and collector that connects residences to Lohman Ford Road. Boggy Ford Road has a posted speed limit of 40 mph.

Dawn Drive is a four-lane collector to the west of Lohman Ford Road and a two-lane local street to the east. This roadway provides access to Lago Vista Elementary School, City Hall, the public library, the police department, as well as residential areas. Dawn Drive has a posted speed limit of 30 mph.

National Drive is a north-south two-way local roadway that connects Boggy Ford Road to residences of Lake Travis. The posted speed limit is 30 mph.

Figures 3 and 4 show the existing roadway dimensions at the study intersections.

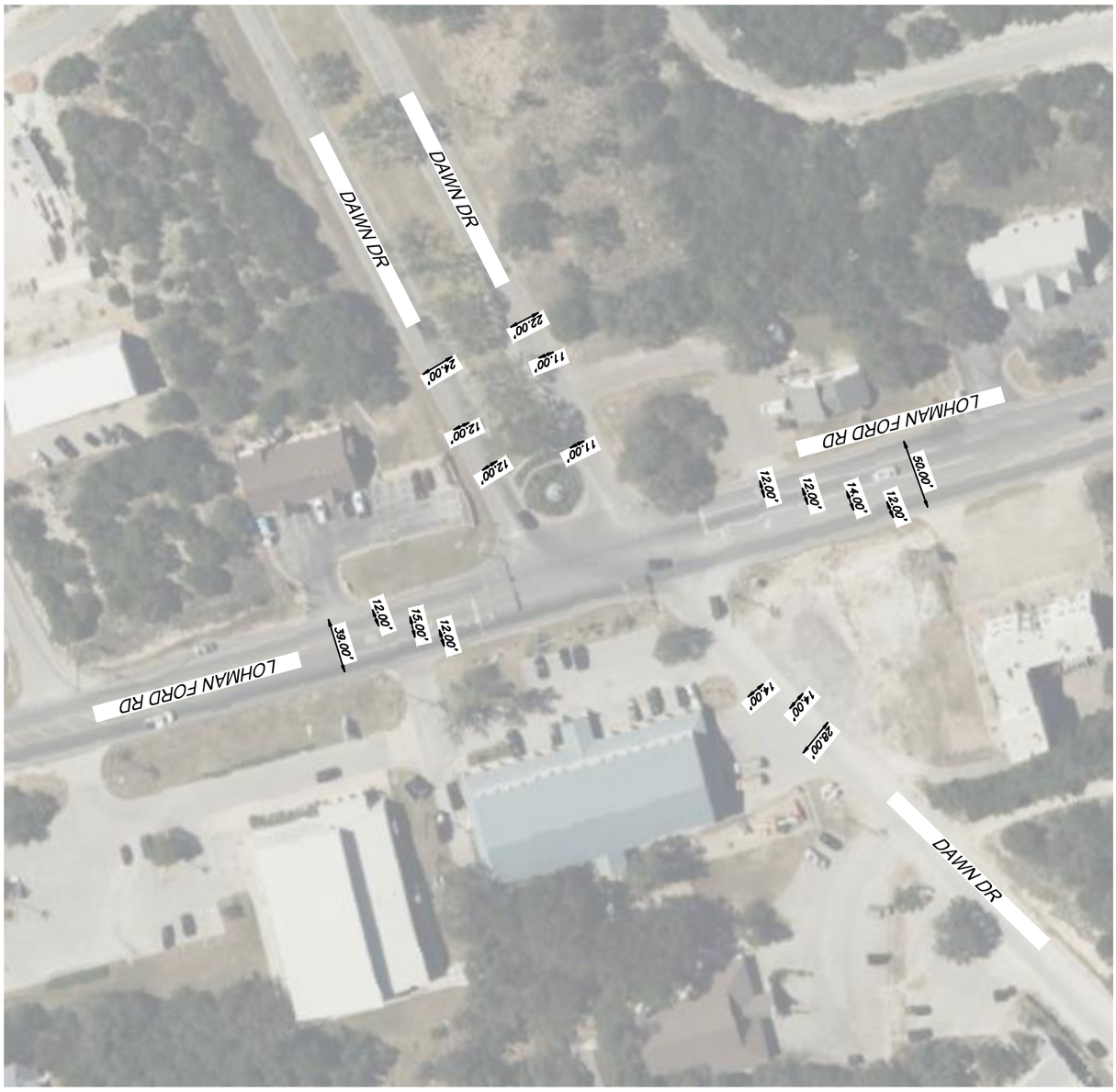

GBA	PROJECT NUMBER 15563.00 DATE 1/15/2024	BOGGY FORD DEVELOPMENT STUDY INTERSECTION DIMENSIONS	FIGURE 3

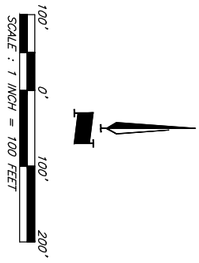

GBA	PROJECT NUMBER 15563.00 DATE 1/15/2024	BOGGY FORD DEVELOPMENT STUDY INTERSECTION DIMENSIONS	FIGURE 4

Existing Intersection Volumes and Lane Configurations

Existing traffic counts were conducted at the three study intersections on Wednesday, November 15 from 7:00 to 9:00 A.M. and 2:00 to 7:00 P.M., while area schools were in session. Full traffic count data can be found in **Appendix B**. Due to the spacing between each study intersection being greater than one mile, the peak hour for each individual intersection was conservatively analyzed, as opposed to applying a uniform peak hour across all three study intersections. The resulting peak hours for the intersections were as follows:

1. Lohman Ford Road / Dawn Drive
   - A.M. Peak Hour: 7:30 A.M. – 8:30 A.M.
   - P.M. Peak Hour: 3:00 P.M. – 4:00 P.M.
2. Boggy Ford Road / Lohman Ford Road
   - A.M. Peak Hour: 7:15 A.M. – 8:15 A.M.
   - P.M. Peak Hour: 4:00 P.M. – 5:00 P.M.
3. Boggy Ford Road / National Drive
   - A.M. Peak Hour: 7:30 A.M. – 8:30 A.M.
   - P.M. Peak Hour: 4:00 P.M. – 5:00 P.M.

Existing lane configurations were obtained through field observations. Existing signal timings were estimated by observing phasing patterns and cycle lengths, then optimizing individual phase timings within the total signal cycle length utilizing the tools provided in the Synchro analysis software. The peak hour volumes are presented in **Figure 5** with the existing lane configurations. Existing intersection lane configurations, signal timings, and turning movement counts were used to calculate the levels of service (LOS) for each of the three study intersections during the A.M. and P.M. Peak Hours.

Existing Intersection Levels of Service

The results of the LOS analysis for existing traffic conditions for A.M Peak Hour and P.M. Peak Hour are presented in **Figures 6 and 7**, respectively. Field observations conducted during the intersection peak hours were used to validate the results of the A.M. and P.M. Peak Hour Synchro analysis. **Appendix C** contains the full report sheets for each analyzed intersection.

The results of the LOS analysis under existing conditions indicate that all three of the study intersections currently operate at an overall acceptable level of service.

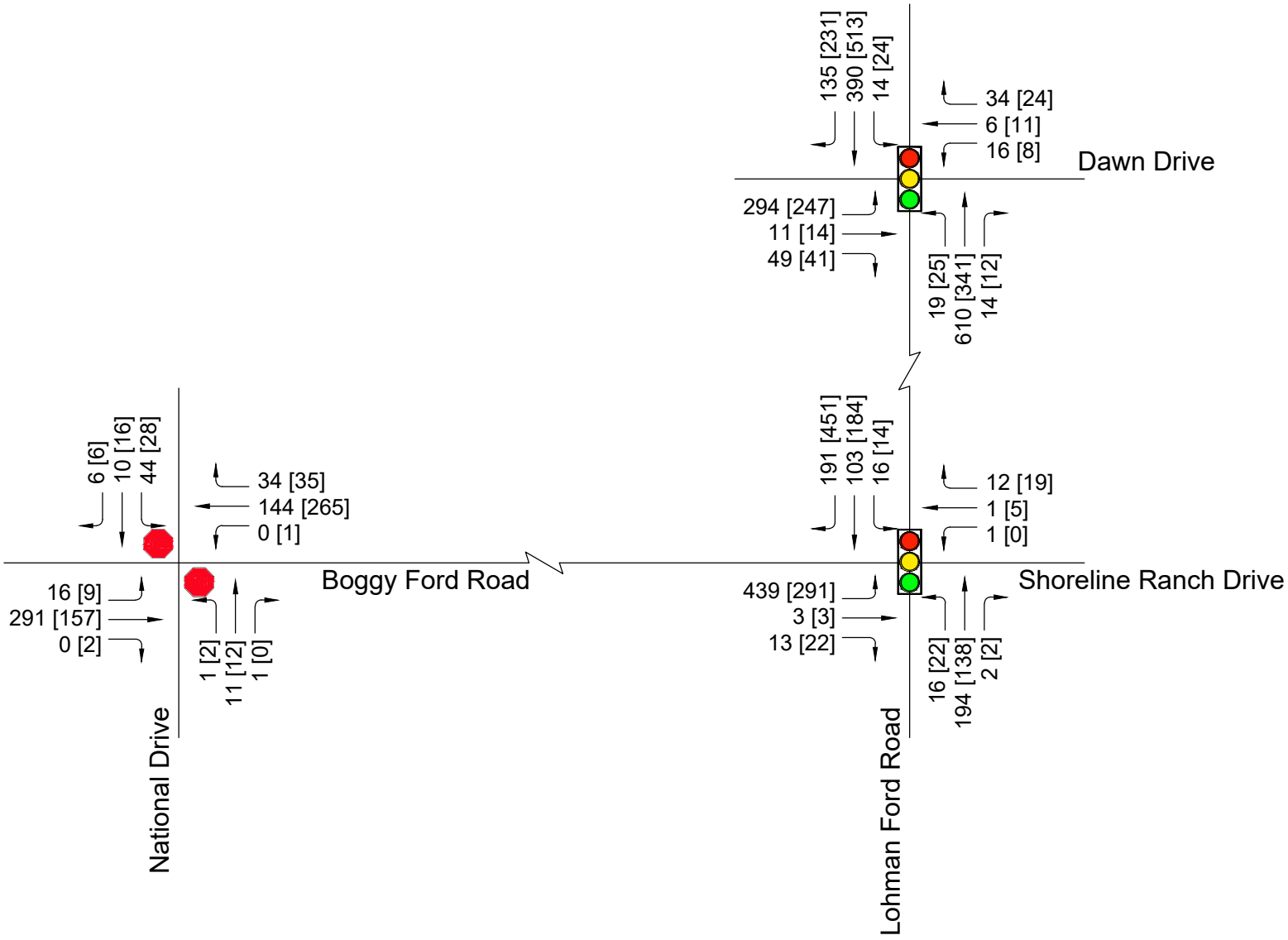

LEGEND

20 [30]

PM Peak Hour Traffic Volume (vph)

AM Peak Hour Traffic Volume (vph)

Vehicle Movement

Signalized Intersection

Stop Controlled Intersection

GBA	N N.T.S.	PROJECT NUMBER 15563.00 DATE 1/15/2024	BOGGY FORD DEVELOPMENT EXISTING TRAFFIC VOLUMES	FIGURE 5

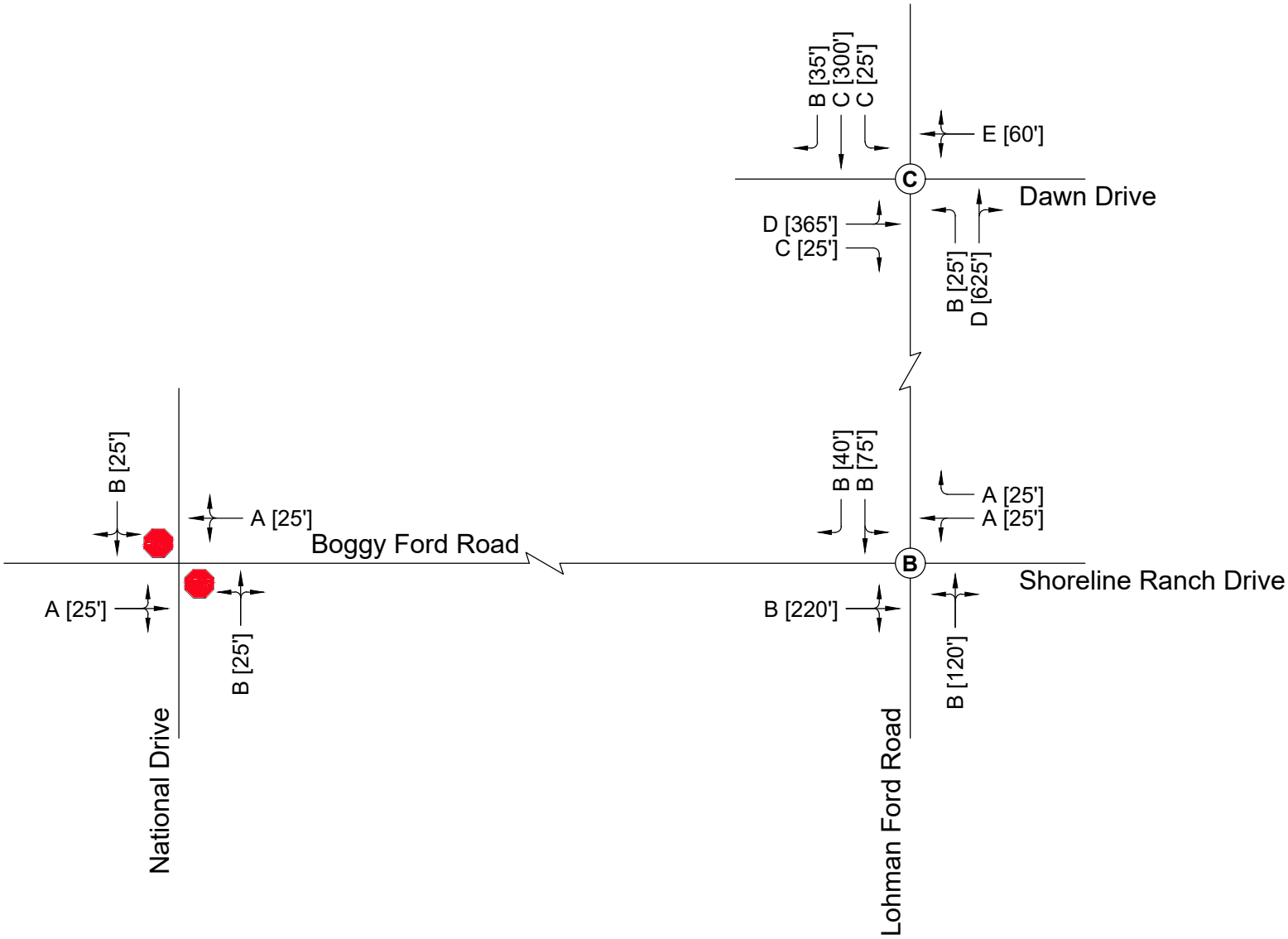

LEGEND

A [100']

95th Percentile Queue (ft.)

Movement Level of Service

(A) Signalized Intersection Overall Level of Service

Stop Sign Control

GBA	N N.T.S.	PROJECT NUMBER #15563.00 DATE 1/15/2024	BOGGY FORD DEVELOPMENT EXISTING SCENARIO A.M. PEAK HOUR LEVELS OF SERVICE	FIGURE 6

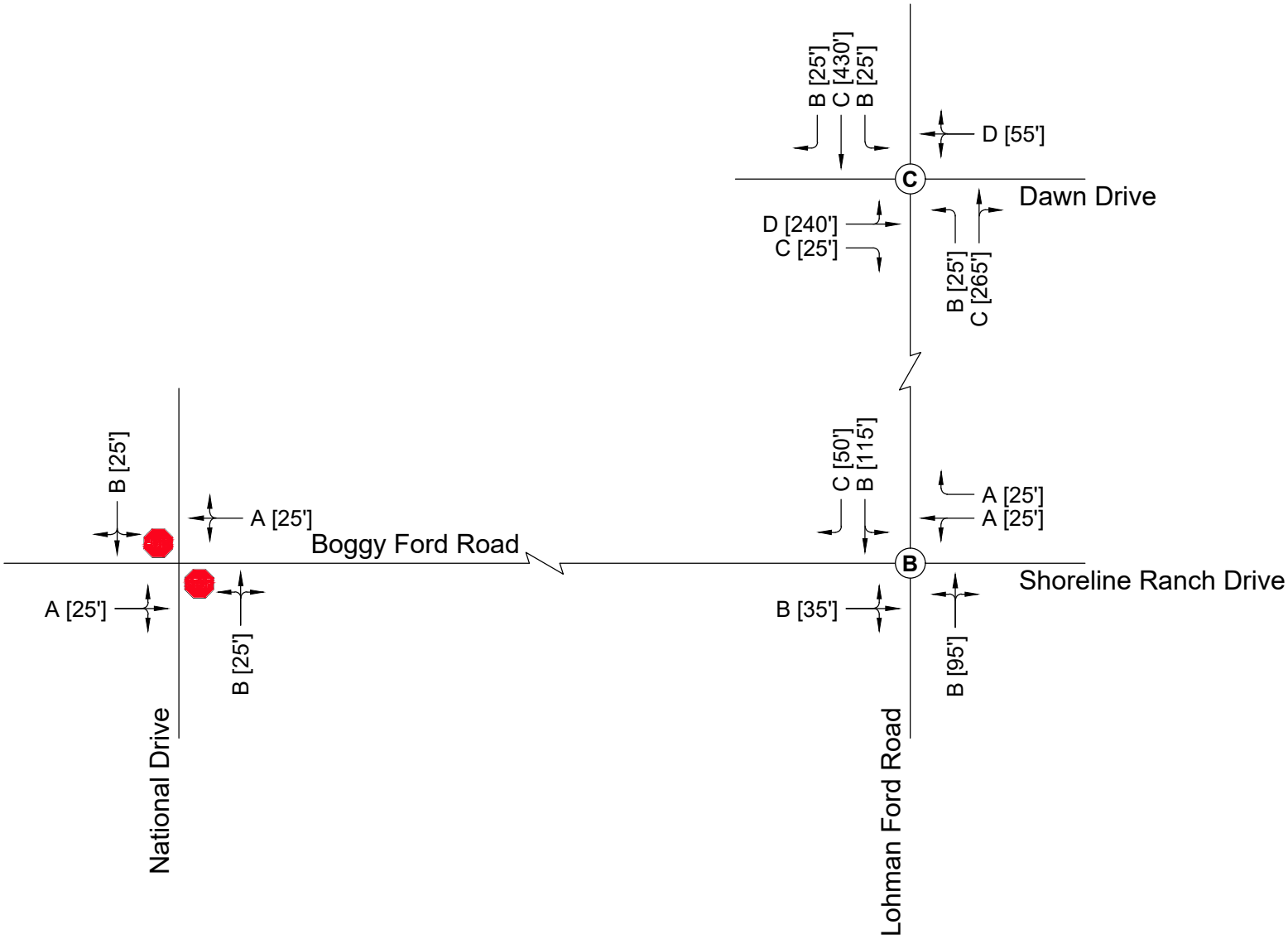

LEGEND

A [100']

95th Percentile Queue (ft.)

Movement Level of Service

(A) Signalized Intersection Overall Level of Service

Stop Sign Control

GBA	N N.T.S.	PROJECT NUMBER #15563.00 DATE 1/15/2024	BOGGY FORD DEVELOPMENT EXISTING SCENARIO P.M. PEAK HOUR LEVELS OF SERVICE	FIGURE 7

Project Transportation Characteristics

This section presents the methods utilized to estimate the amount of traffic generated by the proposed development and how it will be distributed to the surrounding roadway network. The amount of traffic added to the roadway system is estimated using a three-step process:

1. Trip Generation
2. Trip Distribution
3. Trip Assignment

Trip generation estimates the amount of traffic created by the proposed development. Trip distribution estimates the directions of travel to and from the proposed development site. The new trips are then assigned to specific roadway segments and intersection turning movements during the trip assignment. The results of the process are described in the following sections.

Trip Generation Methodology

The purpose of the vehicular trip generation estimate is to approximate the number of new vehicle trips entering and exiting the site for various purposes (e.g., resident, employee, and visitor trips) during a selected time interval. Trip generation rates for the proposed project were calculated using the 11th Edition of the Institute of Transportation Engineers (ITE) Trip Generation Manual. ITE Land Use Codes 310 – Hotel, and 932 – High-Turnover (Sit-Down) Restaurant, were used to calculate trip generation rates for the proposed 110-room hotel and a 3,800 square foot restaurant, respectively.

Proposed Trip Generation

Table 3 summarizes the estimated trip generation for the proposed project for a typical weekday. As shown, the proposed development is estimated to generate 84 A.M. Peak Hour trips, 88 P.M. Peak Hour trips, and 1,176 daily trips.

Table 3 - Proposed Trip Generation

ITE Land Use Code	ITE Land Use Description	Units	Daily Trips	Weekday A.M. Peak			Weekday P.M. Peak		
				In	Out	Total	In	Out	Total
310[1]	Hotel	110 Rooms	769	27	21	48	27	27	54
932[2]	High-Turnover (Sit-Down) Restaurant	3,800 Square Feet GFA	407	20	16	36	21	13	34
Project Total			**1,176**	**47**	**37**	**84**	**48**	**40**	**88**

Notes:

1. ITE Trip Generation (11th Edition) land use category 310 – Hotel (Adj Streets, 7-9A, 4-6P):
   Daily: T = 10.84*(X) – 423.51
   A.M. Peak Hour: T = 0.50*(X) - 7.45 (56% in, 44% out)
   P.M. Peak Hour: T = .74*(X) – 27.89 (51% in, 49% out)
2. ITE Trip Generation (11th Edition) land use category 932 – High-Turnover (Sit-Down) Restaurant (Adj Streets, 7-9A, 4-6P):
   Daily: T = 107.20*(X)
   A.M. Peak Hour: T = 9.57*(X) (55% in, 45% out)
   P.M. Peak Hour: T = 9.05*(X) (61% in, 39% out)

Source: ITE *Trip Generation (11th Edition)*. GBA, 2023.

Trip Distribution

Trip distribution is defined as the directions of approach and departure that vehicles would use to arrive at and depart from the site. The directions of approach and departure trips were based on the surrounding roadway network and the location of nearby population centers. Most of the existing and proposed traffic enters the project area via FM 1431 to the north. The general directions of approach and departure for the A.M. and P.M. Peak Hours, based on surrounding land uses and additional engineering judgment, are summarized below in **Table 4**.

Table 4 - Proposed Trip Distribution

Location	Trip Distribution	
	Entry	Exit
Lohman Ford Road (North)	85%	85%
Lohman Ford Road (South)	5%	5%
Boggy Ford Road (West)	10%	10%

Trip Assignment

The proposed development trips, as shown in Table 3, were assigned to the roadway network based on the proposed trip distribution shown in Table 4. Trip distribution and trip assignment for the proposed development may be seen in **Figure 8.**

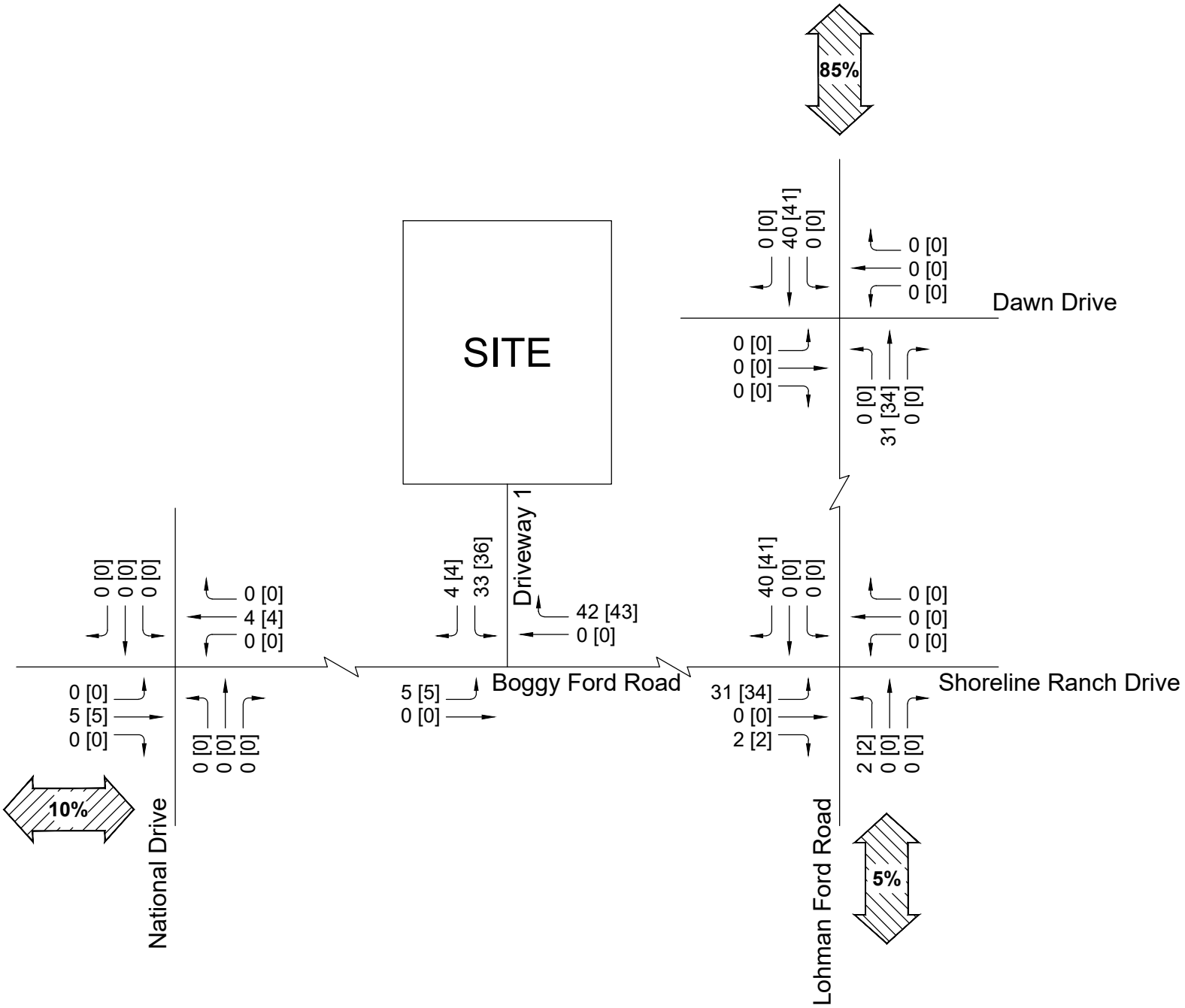

LEGEND

20 [30]

P.M. Peak Hour Traffic Volume (vph)

A.M. Peak Hour Traffic Volume (vph)

Vehicle Movement

GBA

N

N.T.S.

PROJECT NUMBER
15563.00

DATE
1/15/2024

BOGGY FORD DEVELOPMENT
PROPOSED SITE VOLUMES AND TRIP DISTRIBUTION

FIGURE 8

Future Intersection Conditions

This section presents the results of the level of service calculations under the No-Build and Build scenarios. The No-Build scenario is defined as the conditions prior to completion and occupancy of the proposed development. The Build scenario is defined as the No-Build scenario plus new traffic generated by the proposed development, as shown previously in Figure 7.

No-Build Intersection Volumes

Projections of added traffic for No-Build Conditions were based on approved and unoccupied development projects in the vicinity of the Project, as well as typical growth rates. Two background projects were included in this report, Shoreline Ranch and Nature's Point. The locations of these projects are shown in **Figure 9.**

Shoreline Ranch is a planned development with 697 single-family residences located on the east side of Lohman Ford Road between Dawn Drive and Shoreline Ranch Drive. Primary access will be provided from a new drive on Lohman Ford Road north of Boggy Ford Road/Shoreline Ranch Drive. Based on trip generation estimates, the development is projected to generate 436 A.M. Peak Hour trips and 616 P.M. Peak Hour trips.

Nature's Point is a planned development that includes a 6,000 square foot quality restaurant, an 8,000 square foot shopping center, a 150-room resort hotel, and 50 multi-family dwelling units. The project is proposed to be located on the east side of Lohman Ford Road, southeast of Boggy Ford Road / Shoreline Ranch Drive. The primary access point will on Shoreline Ranch Drive via Lakeshore Boulevard. Based on the provided data, the development is projected to generate 54 A.M. Peak Hour trips and 143 P.M. Peak Hour trips.

Projected traffic growth for surrounding roadways was determined by using Texas Department of Transportation (TxDOT) roadway counts. Based on previous growth rates, a 2% annual increase per year was applied to all roadways within the study area in addition to the traffic generated by the listed projects above. The resulting No-Build scenario traffic volumes are shown in **Figure 10**.

Build Intersection Volumes

Net new site trips from the proposed project as presented in Figure 5 were added to the No-Build Conditions volumes in Figure 9 to develop the traffic volumes for Build Conditions. The resulting volumes are shown in **Figure 11**.

FIGURE 9

BOGGY FORD DEVELOPMENT
BACKGROUND PROJECT LOCATIONS

PROJECT NUMBER
15563.00

DATE
1/15/2024

GBA

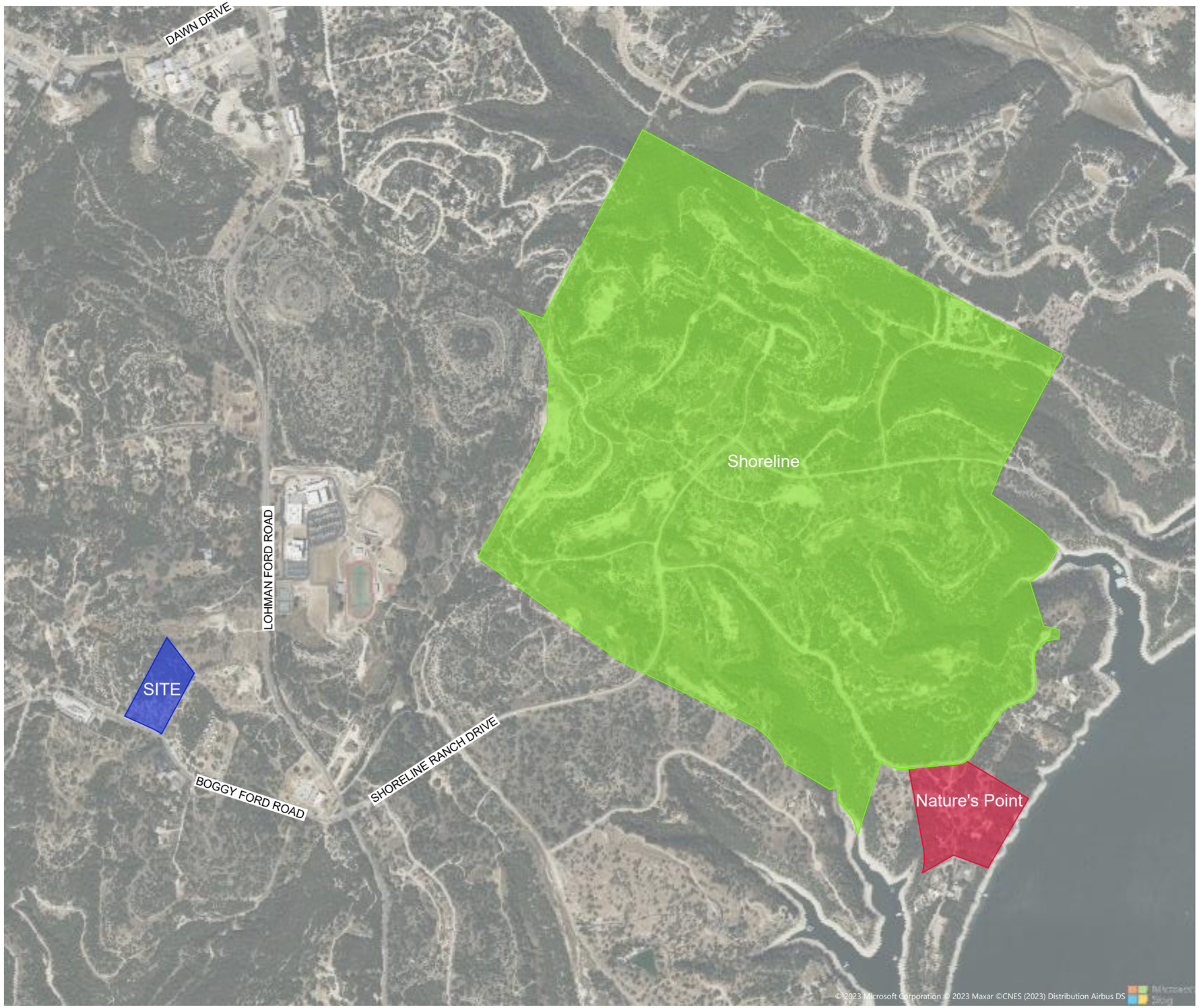

Shoreline
Single Family Detached Housing - 697 Units

Nature's Point
Multifamily Housing - 50 Dwelling Units
Resort Hotel - 150 Rooms
Shopping Center - 8,000 SF
Quality Restaurant - 6,000 SF

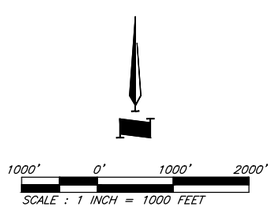

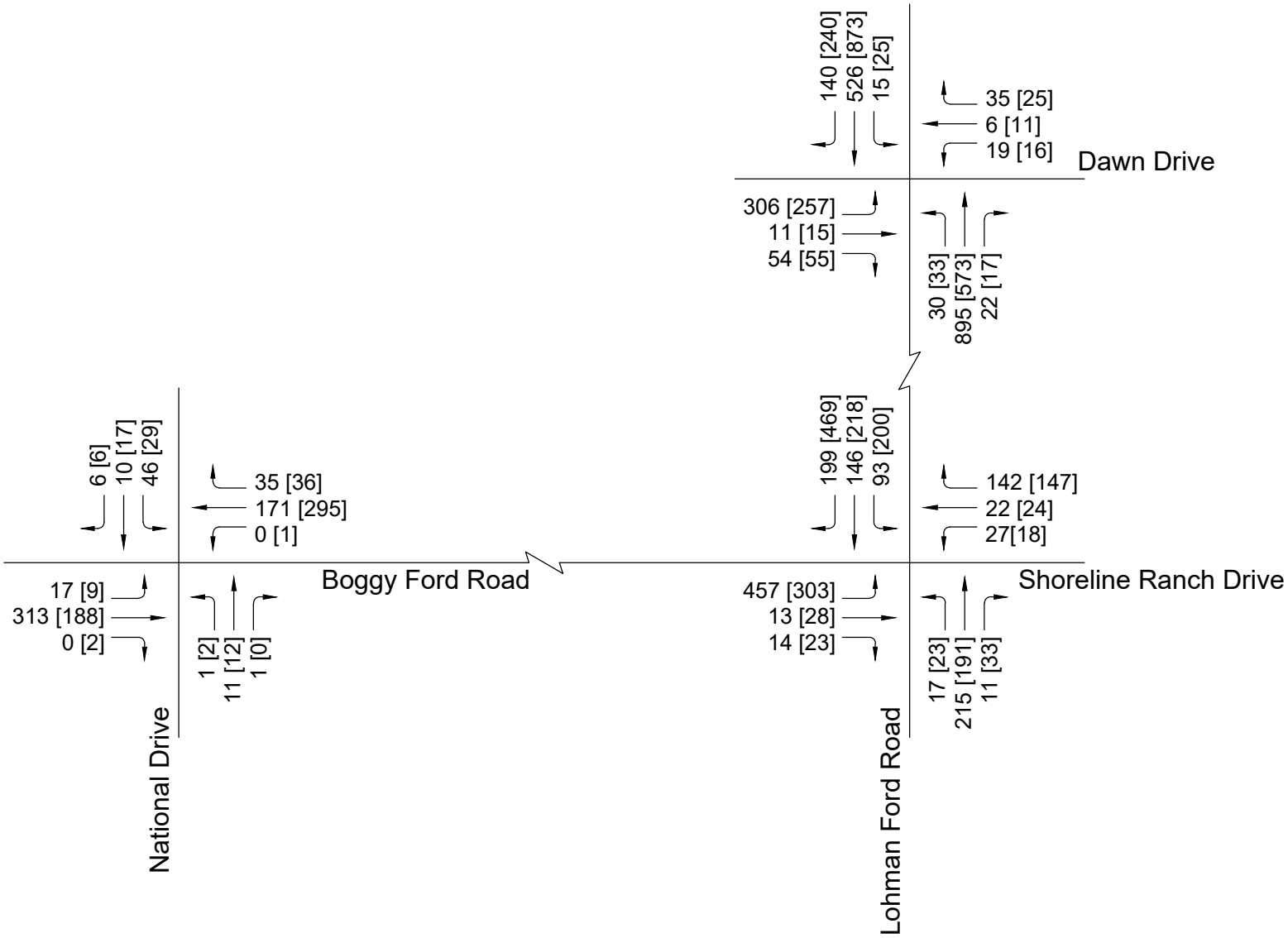

LEGEND

20 [30]

P.M. Peak Hour Traffic Volume (vph)

A.M. Peak Hour Traffic Volume (vph)

Vehicle Movement

GBA

N

N.T.S.

PROJECT NUMBER
15563.00

DATE
1/15/2024

BOGGY FORD DEVELOPMENT
PROPOSED NO-BUILD SCENARIO TRAFFIC VOLUMES

FIGURE 10

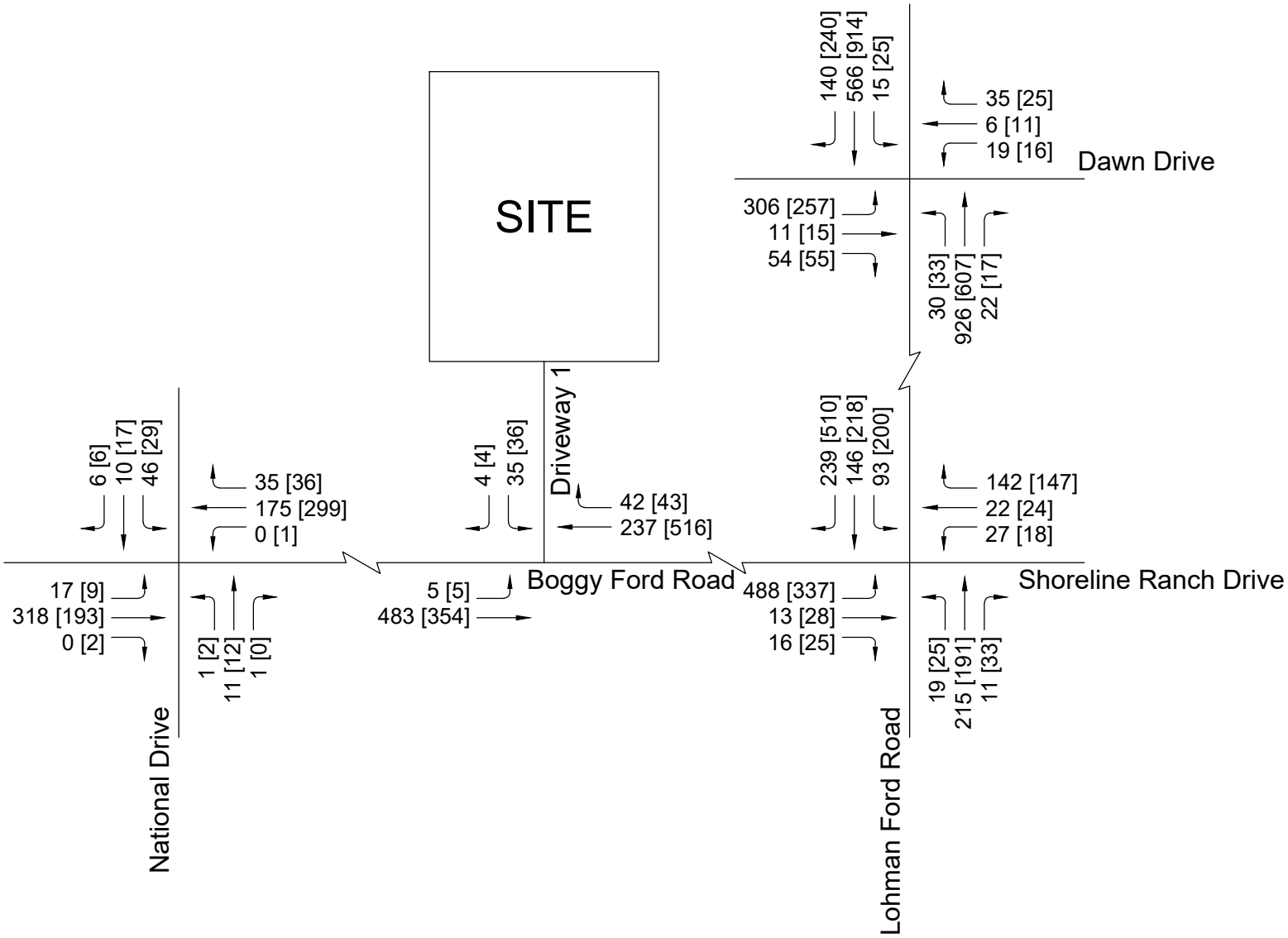

LEGEND

20 [30]

P.M. Peak Hour Traffic Volume (vph)

A.M. Peak Hour Traffic Volume (vph)

Vehicle Movement

GBA

N

N.T.S.

PROJECT NUMBER
15563.00

DATE
1/15/2024

BOGGY FORD DEVELOPMENT
PROPOSED BUILD SCENARIO
TRAFFIC VOLUMES

FIGURE 11

No-Build and Build Intersection Levels of Service

Figures 12, 13, 14 and 15 as well as **Tables 5 and 6** present the results for the study intersections under No-Build and Build scenarios, as well as the results by movement for all study intersections and scenarios analyzed for the A.M and P.M. Peak Hours. In addition to increased traffic at each intersection from the proposed development, background projects, and estimated traffic growth, signal timings were optimized with the same cycle length in each scenario. **Appendix C** contains the corresponding Synchro output reports generated for each scenario analyzed.

Intersection and Roadway Impacts

Analysis of the No-Build scenario shows that the intersection of Lohman Ford Road and Dawn Drive worsens to an LOS E during both the A.M. and P.M. Peak Hours. Additionally, the intersection of Lohman Ford Road and Boggy Ford Road / Shoreline Ranch Drive worsens to an LOS D during the P.M. Peak Hour. Conversely, the increased traffic is expected to have negligible impacts on the intersection of National Drive and Boggy Ford Road.

Analysis of the Build scenario shows that the intersection of Lohman Ford Road and Dawn Drive worsens to LOS F during the A.M. Peak Hour with increased traffic from the proposed development. However, it is worth noting that although a change in LOS does occur, the overall intersection delay is only estimated to increase by 6.9 seconds. Alternatively, the intersection is expected to maintain LOS E during the P.M. Peak Hour. At the intersection of National Drive and Boggy Ford Road, only the southbound movements are affected, changing from LOS B to LOS C with increased site traffic.

Generally, while overall intersection levels of service remain acceptable, individual movements do experience LOS F under both A.M. and P.M. Peak Hour volumes in both the No-Build and Build scenarios. These movements are as follows:

1. Lohman Ford Road / Dawn Drive
    a. A.M. Peak Hour
        i. Eastbound Left-Turn
        ii. Westbound Left-Turn
        iii. Northbound Right-Turn
    b. P.M. Peak Hour
        i. Eastbound Left-Turn
        ii. Westbound Left-Turn (Build Scenario ONLY)
        iii. Southbound Through
2. Lohman Ford Road and Boggy Ford Road / Shoreline Ranch Drive
    a. P.M. Peak Hour
        i. Southbound Left-Turn

As shown, the major negative impacts to study intersections are not attributable to traffic created by the proposed development.

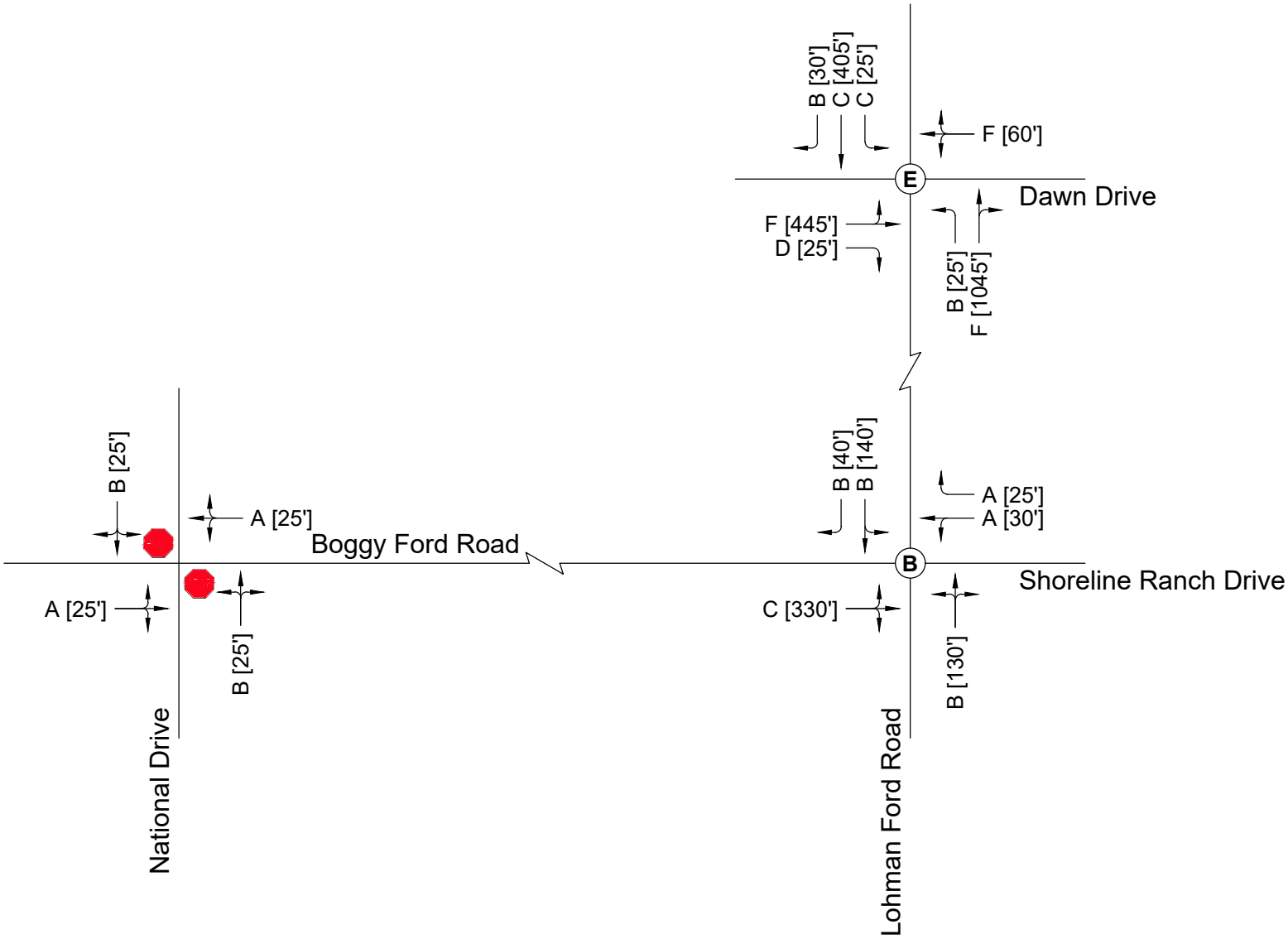

LEGEND

A [100']

95th Percentile Queue (ft.)

Movement Level of Service

(A) Signalized Intersection Overall Level of Service

Stop Sign Control

GBA	N N.T.S.	PROJECT NUMBER #15563.00 DATE 1/15/2024	BOGGY FORD DEVELOPMENT NO-BUILD SCENARIO A.M. PEAK HOUR LEVELS OF SERVICE	FIGURE 12

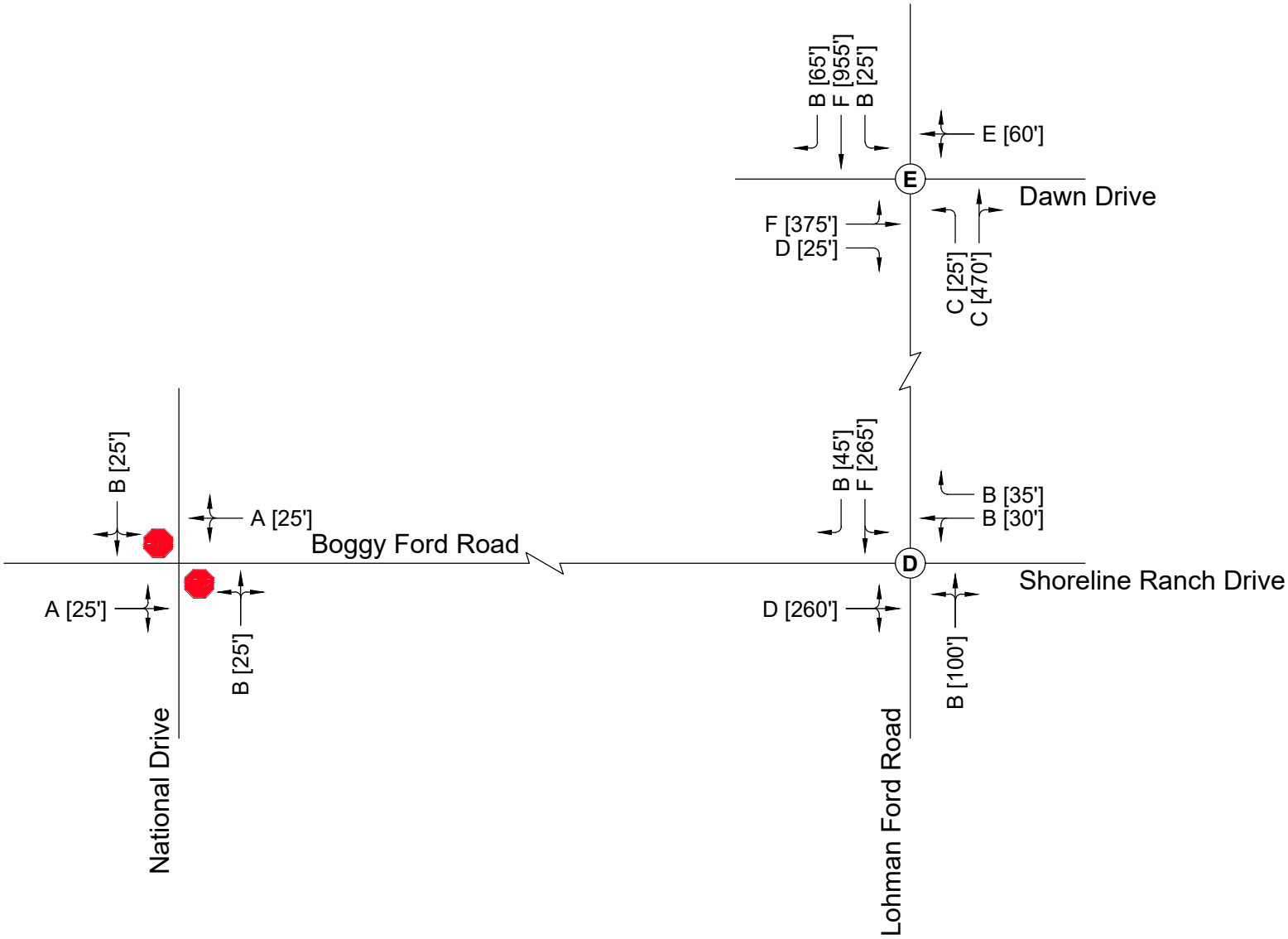

LEGEND

A [100']

95th Percentile Queue (ft.)

Movement Level of Service

(A) Signalized Intersection Overall Level of Service

Stop Sign Control

GBA	N N.T.S.	PROJECT NUMBER #15563.00 DATE 1/15/2024	BOGGY FORD DEVELOPMENT NO-BUILD SCENARIO P.M. PEAK HOUR LEVELS OF SERVICE	FIGURE 13

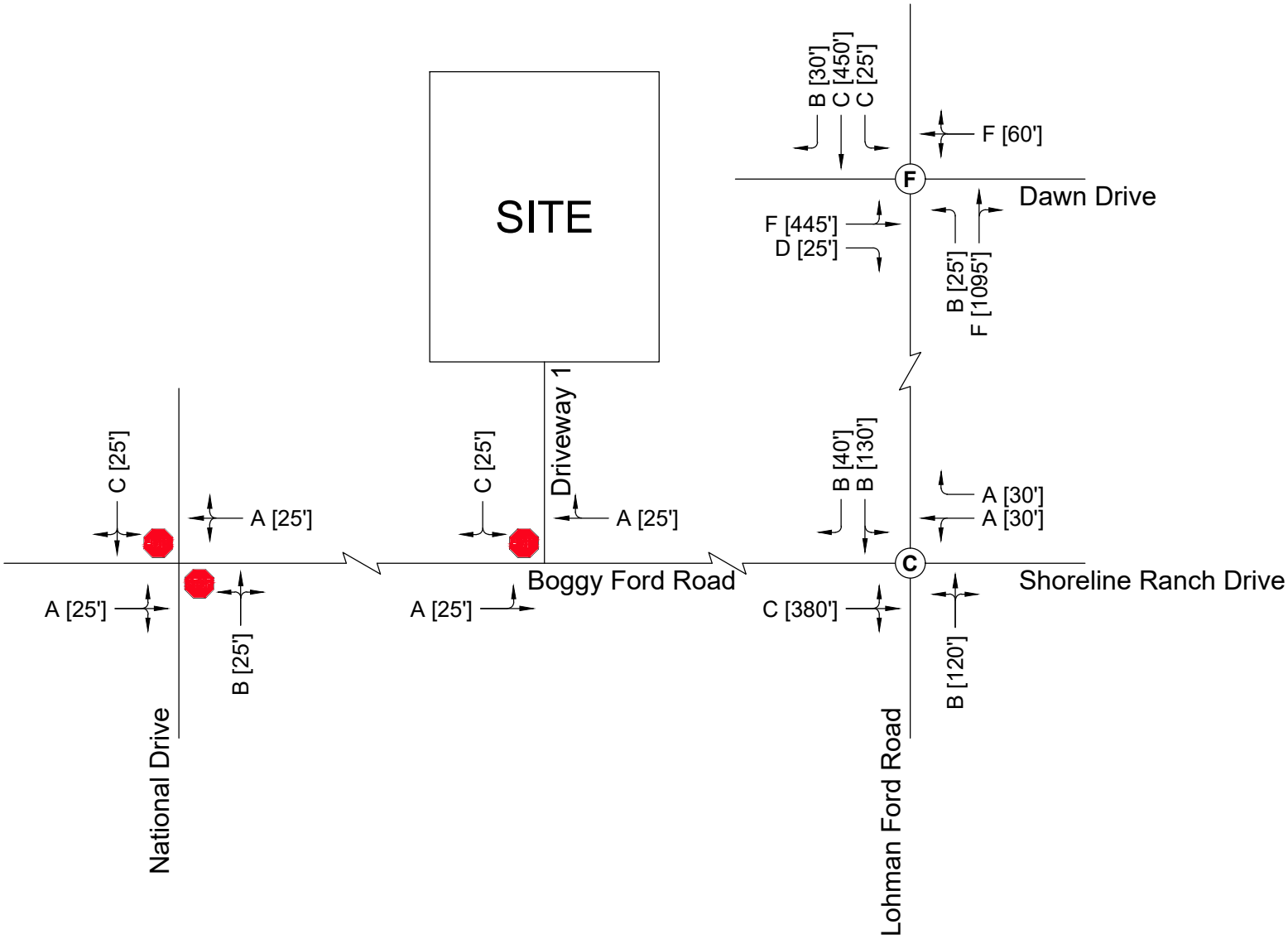

LEGEND

A [100']

95th Percentile Queue (ft.)

Movement Level of Service

(A) Signalized Intersection Overall Level of Service

Stop Sign Control

GBA	N N.T.S.	PROJECT NUMBER #15563.00 DATE 1/15/2024	BOGGY FORD DEVELOPMENT BUILD SCENARIO A.M. PEAK HOUR LEVELS OF SERVICE	FIGURE 14

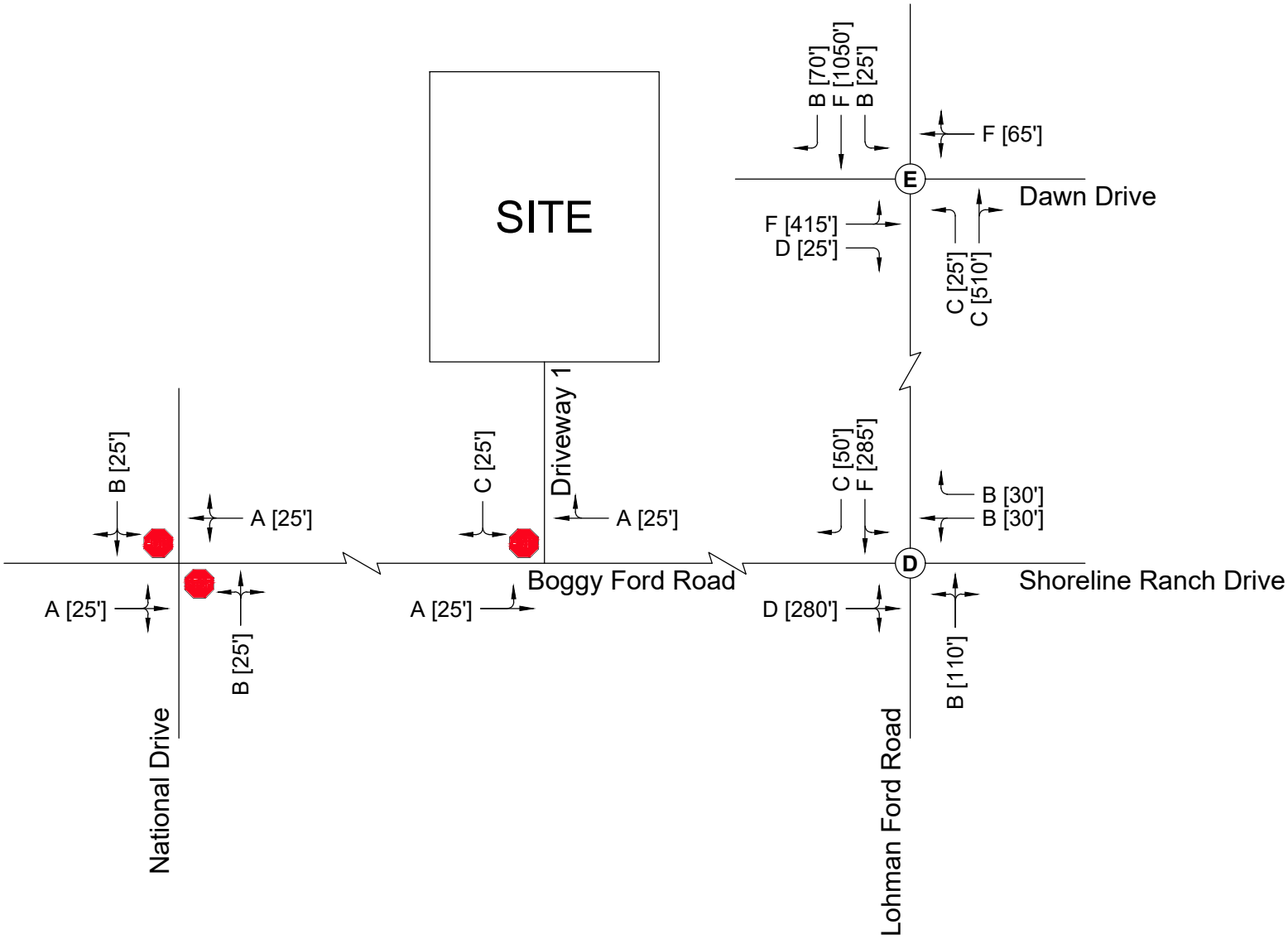

LEGEND

A [100']

95th Percentile Queue (ft.)

Movement Level of Service

(A) Signalized Intersection Overall Level of Service

Stop Sign Control

GBA

N

N.T.S.

PROJECT NUMBER
#15563.00

DATE
1/15/2024

BOGGY FORD DEVELOPMENT
BUILD SCENARIO
P.M. PEAK HOUR
LEVELS OF SERVICE

FIGURE 15

Recommendations And Mitigation Summary

As a result of undesirable levels of service due to increased traffic, recommended mitigations are required per the City of Lago Vista Traffic Impact Assessment Guidelines. In addition to optimizing signal timings for new traffic distributions, the following geometric mitigations are recommended to provide acceptable levels of service at the three study intersections.

1. Lohman Ford Road / Dawn Drive
    a. Construct exclusive eastbound left-turn lane with 275' storage length.
    b. Construct second receiving lane on the northern leg for eastbound left-turns.
    c. Channelize the westbound right-turn movements.
2. Lohman Ford Road and Boggy Ford Road / Shoreline Ranch Drive
    a. Construct exclusive eastbound left-turn lane with 150' storage length.
    b. Construct second receiving lane on northern leg for eastbound left-turns.
3. National Drive and Boggy Ford Road
    a. No Improvements Recommended

Estimated levels of service for all study intersections with the above recommended mitigations may be seen in **Figures 16 and 17**. The recommended mitigations follow, but do not exceed, the recommendations provided as part of both the 2030 City of Lago Vista Comprehensive Plan and the 2009 City of Lago Vista Transportation Plan Evaluation Final Report, which recommends the following improvements within the study area:

1. Lohman Ford Road (North of Boggy Ford Road)
    a. Widen to 4 lane undivided roadway (2030 Comprehensive Plan)
    b. Widen to 6 lane divided roadway (2009 Transportation Plan)
2. Boggy Ford Road (Lohman Ford Road to Highland Lake Drive)
    a. Widen to 4 lane divided roadway (2009 Transportation Plan)
3. Lohman Ford Road and Dawn Drive
    a. Provide dual eastbound left turn lanes.
    b. Provide single westbound left turn lane.
4. Lohman Ford Road and Boggy Ford Road / Shoreline Ranch Drive
    a. Provide one northbound left turn lane and one through/right lane.
    b. Provide exclusive southbound left turn, through, and right turn lanes.
    c. Provide dual eastbound left turn lanes, and one shared through/right lane.

It is recommended that the City of Lago Vista follow the guidance as provided in both the 2030 Comprehensive Plan and 2009 Transportation Plan for the site study area. The improvements recommended as part of the study will satisfy the needs from the proposed development, as well as allow for further development not analyzed as part of this report.

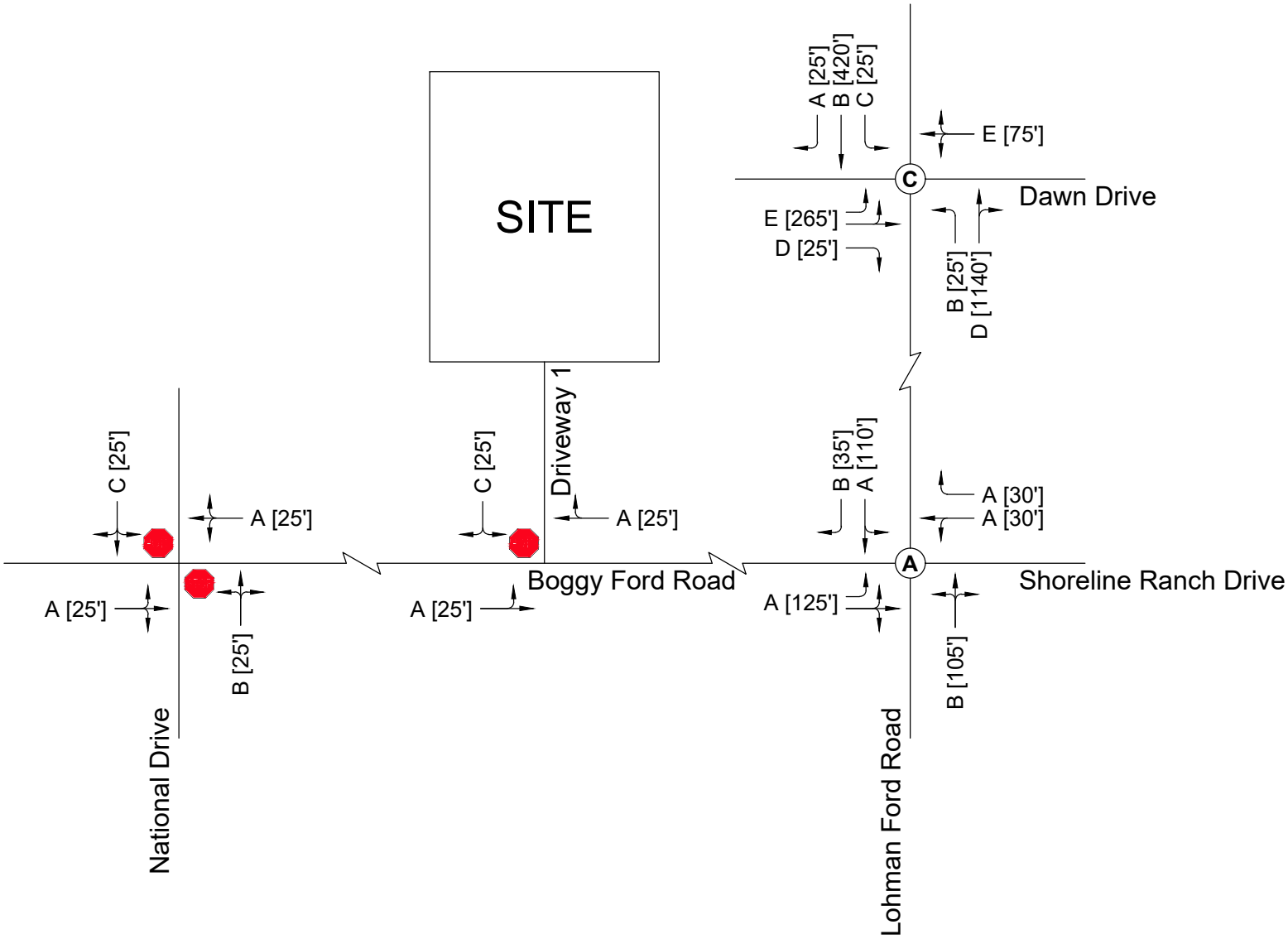

LEGEND

A [100']
95th Percentile Queue (ft.)
Movement Level of Service

(A) Signalized Intersection Overall Level of Service

Stop Sign Control

GBA	N N.T.S.	PROJECT NUMBER #15563.00 DATE 1/15/2024	BOGGY FORD DEVELOPMENT MITIGATED SCENARIO A.M. PEAK HOUR LEVELS OF SERVICE	FIGURE 16

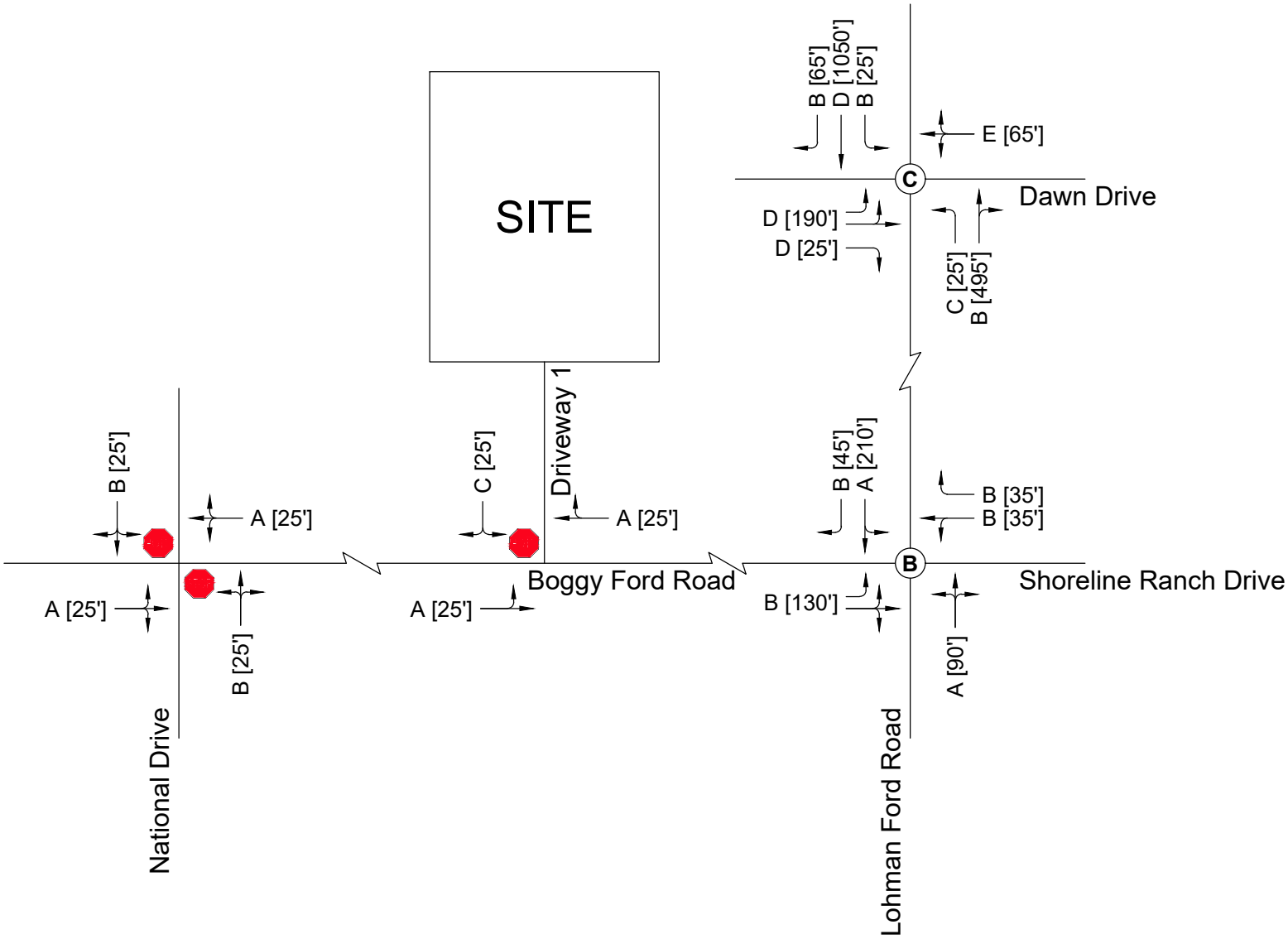

LEGEND

A [100']

95th Percentile Queue (ft.)

Movement Level of Service

(A) Signalized Intersection Overall Level of Service

Stop Sign Control

GBA

N

N.T.S.

PROJECT NUMBER
#15563.00

DATE
1/15/2024

BOGGY FORD DEVELOPMENT
MITIGATED SCENARIO
P.M. PEAK HOUR
LEVELS OF SERVICE

FIGURE 17

Table 5 - A.M. Peak Hour Intersection Analyses

INTERSECTION	MOVEMENT	EXISTING A.M. PEAK HOUR					NO-BUILD SCENARIO A.M. PEAK HOUR					BUILD SCENARIO A.M. PEAK HOUR					MITIGATED BUILD SCENARIO A.M. PEAK HOUR				
		95% QUEUE (ft)	TURN BAY LENGTH (ft)	V/C RATIO	DELAY (s)	LOS	95% QUEUE (ft)	TURN BAY LENGTH (ft)	V/C RATIO	DELAY (s)	LOS	95% QUEUE (ft)	TURN BAY LENGTH (ft)	V/C RATIO	DELAY (s)	LOS	95% QUEUE (ft)	TURN BAY LENGTH (ft)	V/C RATIO	DELAY (s)	LOS
1. LOHMAN FORD ROAD & DAWN DRIVE	EBL/T	365		0.89	50.2	D	443		1.12	128.5	F	443		1.12	128.5	F	265	275	0.84	61.0	E
	EBR	0		0.16	28.1	C	0		0.22	35.2	D	0		0.22	35.2	D	0		0.33	48.7	D
	WBL/T/R	56		0.74	61.2	E	59		0.80	80.4	F	59		0.80	80.4	F	75		0.52	64.3	E
	NBL	17	105	0.07	15.5	B	21	105	0.12	15.4	B	21	105	0.13	16.3	B	19	105	0.09	10.8	B
	NBT/R	622		0.92	36.2	D	1045		1.16	109.5	F	1094		1.20	125.3	F	1136		0.97	39.3	D
	SBL	14	190	0.10	20.5	C	13	190	0.17	25.2	C	13	190	0.17	25.2	C	12	190	0.15	28.1	C
	SBT/R	300		0.58	20.3	C	403		0.68	21.6	C	449		0.73	23.3	C	418		0.58	14.5	B
		31		0.24	16.6	B	29		0.21	14.8	B	29		0.21	14.8	B	24		0.17	10.0	A
INTERSECTION					33.6	C				78.7	E				85.6	F				33.9	C
2. LOHMAN FORD ROAD & BOGGY FORD	EBL/T/R	220		0.67	10.1	B	329		0.82	21.8	C	379		0.89	28.5	C	123	150	0.43	9.3	A
	WBL/T	3		0.00	4.8	A	26		0.05	5.7	A	28		0.05	5.7	A	26		0.07	6.8	A
	WBR	0	85	0.02	4.9	A	25	85	0.17	6.1	A	27	85	0.18	6.2	A	26	85	0.28	7.6	A
	NBL/T/R	118		0.50	16.0	B	127		0.62	19.6	B	120		0.60	18.5	B	103		0.43	10.0	B
	SBL/T	72		0.29	14.6	B	137		0.59	19.7	B	130		0.56	18.5	B	109		0.42	10.0	A
	SBR	40	135	0.67	17.8	B	38	135	0.59	19.4	B	39	135	0.70	19.9	B	35	135	0.61	11.2	B
INTERSECTION					13.3	B				18.4	B				20.7	C				9.6	A
3. NATIONAL DRIVE & BOGGY FORD ROAD	EB			0.01	0.4	A			0.01	0.4	A			0.01	0.4	A			0.01	0.4	A
	WB			0.00	0.0	A			0.00	0.0	A			0.00	0.0	A			0.00	0.0	A
	NB			0.03	13.2	B			0.03	13.8	B			0.03	14.0	B			0.03	14.0	B
	SB			0.14	14.0	B			0.16	14.9	B			0.16	15.1	C			0.16	15.1	C
4. BOGGY FORD ROAD & DRIVEWAY 1	EB			-	-	-			-	-	-			0.00	0.0	A			0.00	0.0	A
	WB			-	-	-			-	-	-			0.00	0.0	A			0.00	0.0	A
	SB			-	-	-			-	-	-			0.12	16.6	C			0.12	16.6	C

Table 6 - P.M. Peak Hour Intersection Analyses

INTERSECTION	MOVEMENT	EXISTING P.M. PEAK HOUR					NO-BUILD SCENARIO P.M. PEAK HOUR					BUILD SCENARIO P.M. PEAK HOUR					MITIGATED BUILD SCENARIO P.M. PEAK HOUR				
		95% QUEUE (ft)	TURN BAY LENGTH (ft)	V/C RATIO	DELAY (s)	LOS	95% QUEUE (ft)	TURN BAY LENGTH (ft)	V/C RATIO	DELAY (s)	LOS	95% QUEUE (ft)	TURN BAY LENGTH (ft)	V/C RATIO	DELAY (s)	LOS	95% QUEUE (ft)	TURN BAY LENGTH (ft)	V/C RATIO	DELAY (s)	LOS
1. LOHMAN FORD ROAD & DAWN DRIVE	EBL/T	238		0.85	38.3	D	375		1.03	100.0	F	411		1.07	119.0	F	190	275	0.79	51.7	D
	EBR	0		0.18	24.0	C	0		0.23	36.7	D	0		0.25	41.1	D	0		0.37	46.0	D
	WBL/T/R	55		0.63	43.5	D	59		0.75	70.2	E	63		0.79	86.2	F	65		0.52	58.3	E
	NBL	20	105	0.17	17.7	B	22	105	0.30	25.6	C	22	105	0.33	28.6	C	21	105	0.27	26.7	C
	NBT/R	264		0.61	20.4	C	467		0.73	22.3	C	510		0.73	21.9	C	494		0.66	15.4	B
	SBL	21	190	0.09	15.6	B	18	190	0.10	15.8	B	18	190	0.10	15.9	B	17	190	0.08	11.4	B
	SBT/R	428		0.84	25.4	C	953		1.09	81.6	F	1050		1.07	74.9	F	1048		0.96	38.9	D
		17		0.54	20.0	B	63		0.35	15.3	B	68		0.33	14.7	B	63		0.30	10.7	B
INTERSECTION					25.9	C				57.1	E				57.0	E				30.6	C
2. LOHMAN FORD ROAD & BOGGY FORD	EBL/T/R	32		0.65	14.3	B	257		0.88	39.8	D	276		0.90	41.8	D	127	150	0.44	14.5	B
	WBL/T	4		0.01	9.1	A	29		0.06	13.0	B	27		0.06	11.7	B	32		0.08	11.6	B
	WBR	2	85	0.05	9.3	A	32	85	0.28	14.3	B	30	85	0.25	12.8	B	35	85	0.39	13.1	B
	NBL/T/R	91		0.32	10.9	B	99		0.52	12.8	B	109		0.58	14.9	B	89		0.30	7.3	A
	SBL/T	115		0.31	10.9	B	262		1.18	124.4	F	281		1.21	136.5	F	207		0.55	8.8	A
	SBR	50	135	0.90	29.0	C	45	135	0.71	16.5	B	50	135	0.83	24.3	C	41	135	0.77	11.1	B
INTERSECTION					18.3	B				47.5	D				52.3	D				10.9	B
3. NATIONAL DRIVE & BOGGY FORD ROAD	EB			0.01	0.4	A			0.01	0.4	A			0.01	0.4	A			0.01	0.4	A
	WB			0.00	0.0	A			0.00	0.0	A			0.00	0.0	A			0.00	0.0	A
	NB			0.03	13.2	B			0.04	14.0	B			0.04	14.1	B			0.04	14.1	B
	SB			0.11	13.4	B			0.13	14.4	B			0.13	14.6	B			0.13	14.6	B
4. BOGGY FORD ROAD & DRIVEWAY 1	EB			-	-	-			-	-	-			0.00	0.0	A			0.00	0.0	A
	WB			-	-	-			-	-	-			0.00	0.0	A			0.00	0.0	A
	SB			-	-	-			-	-	-			0.15	20.0	C			0.15	20.0	C

Conclusion

As requested, this traffic impact analysis (TIA) was prepared to analyze the potential impacts of the proposed 19708 Boggy Ford Road Development (Project) in Lago Vista, Texas. This report was produced in accordance with the approved scope and guidelines provided by the City of Lago Vista, Texas. The report includes an analysis of existing conditions, trip generation and distribution, analysis of future conditions, and analysis of potential mitigatory measures. As part of the analysis effort, three area intersections were analyzed under existing and future conditions.

1. Lohman Ford Road and Dawn Drive
2. Boggy Ford Road and Lohman Ford Road
3. Boggy Ford Road and National Drive

The Project site is located at 19708 Boggy Ford Road and is currently undeveloped. Proposed improvements to the site include a 110-room hotel and a 3,800 square-foot restaurant. Access to the site is proposed to be provided from a single driveway located on Boggy Ford Road.

Existing turning movement counts were conducted at the study intersections on Wednesday, November 15 from 7:00 to 9:00 A.M. and 2:00 to 7:00 P.M., while area schools were in session. For the proposed land uses, projected site traffic was calculated using the Institute of Transportation (ITE) Trip Generation Manual 11th Edition. The proposed development is anticipated to generate 84 A.M. Peak Hour Trips, 88 P.M. Peak Hour Trips, and 1,176 Daily Trips.

Analysis of existing and future conditions at the study intersections revealed an undesirable level of service at Lohman Ford Road and Dawn Drive during the Build scenario's A.M. Peak Hour. However, the change from LOS E in the No-Build scenario to LOS F in the Build scenario is only associated with a 6.9 second increase in overall intersection delay. All other intersections continued to operate at overall acceptable levels of service.

Negative impacts to study intersections become apparent under the No Build scenario and are not attributable to increased traffic from the proposed development. However, mitigatory recommendations were provided as part of the guidelines from the City of Lago Vista, and are as follows:

1. Lohman Ford Road / Dawn Drive
    a. Optimize signal timings for increased traffic.
    b. Construct exclusive eastbound left turn lane with 275' storage length.
    c. Construct second receiving lane on the northern leg for eastbound left turns.
    d. Channelize the westbound right turn movements.
2. Lohman Ford Road and Boggy Ford Road / Shoreline Ranch Drive
    a. Optimize signal timings for increased traffic.
    b. Construct exclusive eastbound left turn lane with 150' storage length.
    c. Construct second receiving lane on northern leg for eastbound left turns.

3. National Drive and Boggy Ford Road
   a. No Improvements Recommended

The recommended mitigations are in line with, but do not exceed, the recommendations provided as part of both the 2030 City of Lago Vista Comprehensive Plan and the 2009 City of Lago Vista Transportation Plan Evaluation Final Report. Therefore, it is recommended that the City of Lago Vista follow the guidance as provided in both the 2030 Comprehensive Plan and 2009 Transportation Plan for the site study area. The improvements recommended as part of these plans will satisfy the demands from traffic analyzed as part of this study, as well accommodate traffic from future development along the corridor. The Project should not be expected to make contributions towards the recommended mitigation improvements, which are already necessary to serve the background traffic growth and other approved developments in the study area.

Please contact us at kstrain@gbateam.com or 737.247.7517 with additional questions or comments regarding this traffic impact analysis.

Respectfully submitted,
GEORGE BUTLER ASSOCIATES, INC.

Kathleen E. Strain, P.E.
Senior Traffic Engineer

Appendices

- Appendix A: Approved City of Lago Vista Scope
- Appendix B: Data Collection
- Appendix C: Intersection Analyses
    - C.1. Existing Conditions
    - C.2. No-Build Scenario
    - C.3. Build Scenario
    - C.4. Mitigated Build Scenario
- Appendix D: Provided Background Development Files
    - D.1. Shoreline Ranch Development Provided Files
    - D.2. Nature's Point Development Provided Files

APPENDIX A

APPROVED CITY OF LAGO VISTA SCOPE

GBA

9601 Amberglen Blvd, Ste. 109
Austin, Texas 78729

TRAFFIC IMPACT ANALYSIS SCOPE AND STUDY AREA

Project Name:	Boggy Ford Road TIA	Date:	October 30, 2023
Location:	North side of Boggy Ford Road just west of the Lohman Ford Road intersection, Lago Vista, Texas		
Owner's Agent:	GBA (Kathleen Strain, P.E.)	Phone:	(737) 247-7517

Instructions: Sections I and II of the scope must be approved prior to formal submittal of a Traffic Impact Analysis (TIA). You may receive sign off of both sections concurrently or separately.

I. Data Collection

1. Background Information

a. Proposed daily trip generation estimate for the proposed development.
b. Location/study area map that specifies major roadway and intersections within the study area.
c. The following adopted plans and public infrastructure improvement projects apply to the site: N/A

2.Analysis Phases/Years

a. Existing
b. 2025 – Full Buildout

3. Intersections Level of Service: 7:00 AM – 9:00 AM and 2:00 PM to 7:00 PM every 15 minutes. Calculations for a.m. and p.m. peak hours must be performed for the following intersections, showing (a) existing traffic conditions and (b) projected traffic conditions, identifying site, non-site, and total traffic:

a. Lohman Ford Road and Boggy Ford Road
b. Lohman Ford Road and Dawn Drive
c. Boggy Ford Road and National Drive

Notes: Existing signal timings shall be used for the intersection unless alternative timing proposals are approved by TxDOT and the City of Lago Vista.

Analysis for each phase/year shall include:

a. Levels of Service (LOS) by movements
b. Delay by movements
c. Volume/Capacity by movements
d. Queueing analysis with 95% queue length by movements, vs existing storage bay and/or distance from adjacent intersection(s)

4. **Signal Warrants Analysis:** A signal warrant analysis (existing, No-Build and Build) shall be performed for the following study area intersections showing 12 hours of data including peak hours: N/A

5. **Other Considerations:**

   a. Counts are to be taken on weekdays when public schools are in session.
   b. Ensure automated traffic data captures demand. Manual observations or a multiple period analysis may be necessary.
   c. Capture and report data to calibrate model for existing operational analysis (i.e., queue length and approach/movement delay recommended).
   d. Methodology for Capacity and Level of Service shall be Highway Capacity Manual, latest edition.
   e. Discuss and illustrate methodology for trip distribution.

II. Study Assumptions

1. **Data Assumptions.** The following assumptions must be included in the analysis. Any changes in these assumptions must be approved by the transportation reviewer(s) prior to submittal of the TIA.

   a. Background Traffic – The average annual growth rate shall be calculated using available sources as near as possible to the study area intersections/roadways and shall be documented in the report and shall be calculated using the following standard formula and back solved to growth rate:

      i. "Newest reported volume = Old reported volume * (1+Growth rate)^number of years in between the two volumes"
      ii. The roadway used for computing growth rate should be of the same class od roadway as the development's location and be as close as possible to the development.

   b. Background Project: Background projects shall include:

Project Name	Case Number
Firefly Cove	
Wind Ranch	
Gross Close	
Montechino	
Shoreline Ranch	
Natures Point	

c. Internal Trips / Transit Trips / Walking / Biking: 0%

d. Pass-By trip reductions: 0%

2. **Trip Distribution:** Site Trips shall be distributed for each proposed land use.

   a. Existing Trips and Forecasted Trips to be determined based on existing and historical data.

   b. Site Trips to be suggested based on proposed type of land use and end user's likely path given site location in relation to other generators and/or attractors.

III. Submittal Requirements

1. Submit to City of Lago Vista electronically, by the City's approved method.
2. Traffic modeling requirements:
   a. All timing sheets obtained from various sources (TxDOT, etc.) are to be included in the Appendix of the TIA.
   b. Submit electronically the following: PDF of the TIA, Synchro Network for all conditions analyzed and background DXF or aerial format. Synchro files must be in real work coordinates, Excel spreadsheets with overall trip generation, internal and pass-by trip capture rates, if applicable, site trip distribution & assignment within roadway network and site driveways.
   c. All intersections must be modeled in one Synchro (latest edition) network (including unsignalized intersections).
   d. Synchro printouts and analysis must be performed for the following scenarios and must be included in the appendix of the report in the following format:
      - Existing conditions (am + pm on one sheet)
      - Six (6) future conditions (for all years/phases identified in section I of this scope):
        - (AM No-Build, AM Build, AM Build + Mitigation)
        - (PM No-Build, PM Build, PM Build + Mitigation)
   e. Intersection LOS by movements, Delay by movements, v/c by movements, and 95% queue length by movements in a tabular format (on 11"x17" sheets only) for different scenarios noted.
3. Maps/Plans/Exhibits
   a. A proposed Site Plan.
   b. A CAD or GIS file for the Development.
   c. A map showing all background projects and trip generation for each project individually.
   d. A map showing the location of all background projects collectively in relation to the proposed site.
   e. A map/plan showing all roadways and driveways analyzed (labeled and dimensioned).
   f. Exhibits of all intersections with roadway improvements (dimensioned), including above ground utilities called out.

Any change in the assumptions provided for preparation of this scope may require a change in the scope. If the analysis or traffic volumes provided in the report indicate impacts to intersections or roadways that are not included in this scope, additional analysis may be required.

The Owner's Agent and the Applicant confirm that all the documents, reports and files will be prepared in accordance with the submittal requirements of this TIA scope. The Owner's Agent and the Applicant confirm that comments received will not be cleared based on phone calls, e-mails or meetings. Formal updates must be submitted in order to receive clearance of issued comments.

Prepared by: Kathleen E Strain Date: 10.30.2023 Phone: (737) 247-7517

Kathleen Strain, PE Email: kstrain@gbateam.com

Senior Traffic Engineer, GBA

Agreed to by: Taylor Whichard Date: 10/30/23 Phone: (512) 599-4179

Taylor Whichard Email: Taylor.Whichard@lagovistatexas.gov

Director of Public Works, City of Lago Vista

APPENDIX B

DATA COLLECTION

GRAM Traffic Counting, inc.

3751 FM 1105, Bldg. A
Georgetown, TX 78626
512-832-8650

File Name : Site 1 - Lohman Ford Rd & Dawn Dr - AM
Site Code : 1_____
Start Date : 11/15/2023
Page No : 1

Groups Printed- Vehicles - Heavy Vehicles

	Lohman Ford Rd Southbound					Westbound					Lohman Ford Rd Northbound					Dawn Dr Eastbound					
Start Time	Left	Thru	Right	U-TURN	App. Total	Left	Thru	Right	U-TURN	App. Total	Left	Thru	Right	U-TURN	App. Total	Left	Thru	Right	U-TURN	App. Total	Int. Total
07:00	1	70	29	0	100	3	4	6	0	13	4	100	2	0	106	55	0	4	0	59	278
07:15	4	94	48	0	146	3	6	6	0	15	6	144	1	0	151	67	4	9	0	80	392
07:30	5	100	60	0	165	5	2	8	0	15	6	168	3	0	177	87	6	17	0	110	467
07:45	2	86	20	0	108	4	1	6	0	11	1	153	2	0	156	91	1	11	0	103	378
Total	12	350	157	0	519	15	13	26	0	54	17	565	8	0	590	300	11	41	0	352	1515
08:00	2	89	23	0	114	5	0	8	0	13	3	131	6	0	140	62	3	5	0	70	337
08:15	5	115	32	0	152	2	3	12	0	17	9	158	3	0	170	54	1	16	0	71	410
08:30	3	118	40	0	161	1	2	5	0	8	8	165	2	0	175	48	1	11	0	60	404
08:45	5	79	24	0	108	1	1	9	0	11	8	102	1	0	111	43	1	7	0	51	281
Total	15	401	119	0	535	9	6	34	0	49	28	556	12	0	596	207	6	39	0	252	1432
Grand Total	27	751	276	0	1054	24	19	60	0	103	45	1121	20	0	1186	507	17	80	0	604	2947
Apprch %	2.6	71.3	26.2	0		23.3	18.4	58.3	0		3.8	94.5	1.7	0		83.9	2.8	13.2	0		
Total %	0.9	25.5	9.4	0	35.8	0.8	0.6	2	0	3.5	1.5	38	0.7	0	40.2	17.2	0.6	2.7	0	20.5	
Vehicles	26	719	265	0	1010	23	17	60	0	100	45	1090	20	0	1155	496	16	79	0	591	2856
% Vehicles	96.3	95.7	96	0	95.8	95.8	89.5	100	0	97.1	100	97.2	100	0	97.4	97.8	94.1	98.8	0	97.8	96.9
Heavy Vehicles	1	32	11	0	44	1	2	0	0	3	0	31	0	0	31	11	1	1	0	13	91
% Heavy Vehicles	3.7	4.3	4	0	4.2	4.2	10.5	0	0	2.9	0	2.8	0	0	2.6	2.2	5.9	1.2	0	2.2	3.1

	Lohman Ford Rd Southbound					Westbound					Lohman Ford Rd Northbound					Dawn Dr Eastbound					
Start Time	Left	Thru	Right	U-TURN	App. Total	Left	Thru	Right	U-TURN	App. Total	Left	Thru	Right	U-TURN	App. Total	Left	Thru	Right	U-TURN	App. Total	Int. Total
Peak Hour Analysis From 07:00 to 08:45 - Peak 1 of 1																					
Peak Hour for Entire Intersection Begins at 07:30																					
07:30	**5**	100	**60**	0	**165**	**5**	2	8	0	15	6	**168**	3	0	**177**	87	**6**	**17**	0	**110**	**467**
07:45	2	86	20	0	108	4	1	6	0	11	1	153	2	0	156	**91**	1	11	0	103	378
08:00	2	89	23	0	114	5	0	8	0	13	3	131	**6**	0	140	62	3	5	0	70	337
08:15	5	**115**	32	0	152	2	**3**	**12**	0	**17**	**9**	158	3	0	170	54	1	16	0	71	410
Total Volume	14	390	135	0	539	16	6	34	0	56	19	610	14	0	643	294	11	49	0	354	1592
% App. Total	2.6	72.4	25	0		28.6	10.7	60.7	0		3	94.9	2.2	0		83.1	3.1	13.8	0		
PHF	.700	.848	.563	.000	.817	.800	.500	.708	.000	.824	.528	.908	.583	.000	.908	.808	.458	.721	.000	.805	.852
Vehicles	14	379	130	0	523	15	5	34	0	54	19	591	14	0	624	290	10	48	0	348	1549
% Vehicles	100	97.2	96.3	0	97.0	93.8	83.3	100	0	96.4	100	96.9	100	0	97.0	98.6	90.9	98.0	0	98.3	97.3
Heavy Vehicles	0	11	5	0	16	1	1	0	0	2	0	19	0	0	19	4	1	1	0	6	43
% Heavy Vehicles	0	2.8	3.7	0	3.0	6.3	16.7	0	0	3.6	0	3.1	0	0	3.0	1.4	9.1	2.0	0	1.7	2.7

GRAM Traffic Counting, inc.

3751 FM 1105, Bldg. A
Georgetown, TX 78626
512-832-8650

File Name : Site 1 - Lohman Ford Rd & Dawn Dr - AM
Site Code : 1_____
Start Date : 11/15/2023
Page No : 2

	Lohman Ford Rd Southbound					Westbound					Lohman Ford Rd Northbound					Dawn Dr Eastbound					
Start Time	Left	Thru	Right	U-TURN	App. Total	Left	Thru	Right	U-TURN	App. Total	Left	Thru	Right	U-TURN	App. Total	Left	Thru	Right	U-TURN	App. Total	Int. Total
Peak Hour Analysis From 07:00 to 08:45 - Peak 1 of 1																					
Peak Hour for Each Approach Begins at:																					
	07:30					07:30					07:30					07:15					
+0 mins.	**5**	100	**60**	0	**165**	**5**	2	8	0	15	6	**168**	3	0	**177**	67	4	9	0	80	
+15 mins.	2	86	20	0	108	4	1	6	0	11	1	153	2	0	156	87	**6**	**17**	0	**110**	
+30 mins.	2	89	23	0	114	5	0	8	0	13	3	131	**6**	0	140	**91**	1	11	0	103	
+45 mins.	5	**115**	32	0	152	2	**3**	**12**	0	**17**	**9**	158	3	0	170	62	3	5	0	70	
Total Volume	14	390	135	0	539	16	6	34	0	56	19	610	14	0	643	307	14	42	0	363	
% App. Total	2.6	72.4	25	0		28.6	10.7	60.7	0		3	94.9	2.2	0		84.6	3.9	11.6	0		
PHF	.700	.848	.563	.000	.817	.800	.500	.708	.000	.824	.528	.908	.583	.000	.908	.843	.583	.618	.000	.825	
Vehicles	14	379	130	0	523	15	5	34	0	54	19	591	14	0	624	303	13	41	0	357	
% Vehicles	100	97.2	96.3	0	97	93.8	83.3	100	0	96.4	100	96.9	100	0	97	98.7	92.9	97.6	0	98.3	
Heavy Vehicles	0	11	5	0	16	1	1	0	0	2	0	19	0	0	19	4	1	1	0	6	
% Heavy Vehicles	0	2.8	3.7	0	3	6.2	16.7	0	0	3.6	0	3.1	0	0	3	1.3	7.1	2.4	0	1.7	

GRAM Traffic Counting, inc.

3751 FM 1105, Bldg. A
Georgetown, TX 78626
512-832-8650

File Name : Site 1 - Lohman Ford Rd & Dawn Dr - AM
Site Code : 1_____
Start Date : 11/15/2023
Page No : 3

Groups Printed- Vehicles

	Lohman Ford Rd Southbound					Westbound					Lohman Ford Rd Northbound					Dawn Dr Eastbound					
Start Time	Left	Thru	Right	U-TURN	App. Total	Left	Thru	Right	U-TURN	App. Total	Left	Thru	Right	U-TURN	App. Total	Left	Thru	Right	U-TURN	App. Total	Int. Total
07:00	1	63	27	0	91	3	3	6	0	12	4	99	2	0	105	51	0	4	0	55	263
07:15	3	87	45	0	135	3	6	6	0	15	6	143	1	0	150	66	4	9	0	79	379
07:30	5	98	58	0	161	4	1	8	0	13	6	163	3	0	172	85	5	17	0	107	453
07:45	2	83	20	0	105	4	1	6	0	11	1	151	2	0	154	90	1	11	0	102	372
Total	11	331	150	0	492	14	11	26	0	51	17	556	8	0	581	292	10	41	0	343	1467
08:00	2	88	22	0	112	5	0	8	0	13	3	123	6	0	132	62	3	4	0	69	326
08:15	5	110	30	0	145	2	3	12	0	17	9	154	3	0	166	53	1	16	0	70	398
08:30	3	113	40	0	156	1	2	5	0	8	8	156	2	0	166	47	1	11	0	59	389
08:45	5	77	23	0	105	1	1	9	0	11	8	101	1	0	110	42	1	7	0	50	276
Total	15	388	115	0	518	9	6	34	0	49	28	534	12	0	574	204	6	38	0	248	1389
Grand Total	26	719	265	0	1010	23	17	60	0	100	45	1090	20	0	1155	496	16	79	0	591	2856
Apprch %	2.6	71.2	26.2	0		23	17	60	0		3.9	94.4	1.7	0		83.9	2.7	13.4	0		
Total %	0.9	25.2	9.3	0	35.4	0.8	0.6	2.1	0	3.5	1.6	38.2	0.7	0	40.4	17.4	0.6	2.8	0	20.7	

	Lohman Ford Rd Southbound					Westbound					Lohman Ford Rd Northbound					Dawn Dr Eastbound					
Start Time	Left	Thru	Right	U-TURN	App. Total	Left	Thru	Right	U-TURN	App. Total	Left	Thru	Right	U-TURN	App. Total	Left	Thru	Right	U-TURN	App. Total	Int. Total
Peak Hour Analysis From 07:00 to 08:45 - Peak 1 of 1																					
Peak Hour for Entire Intersection Begins at 07:30																					
07:30	**5**	98	**58**	0	**161**	4	1	8	0	13	6	**163**	3	0	**172**	85	**5**	**17**	0	**107**	**453**
07:45	2	83	20	0	105	4	1	6	0	11	1	151	2	0	154	**90**	1	11	0	102	372
08:00	2	88	22	0	112	**5**	0	8	0	13	3	123	**6**	0	132	62	3	4	0	69	326
08:15	5	**110**	30	0	145	2	**3**	**12**	0	**17**	**9**	154	3	0	166	53	1	16	0	70	398
Total Volume	14	379	130	0	523	15	5	34	0	54	19	591	14	0	624	290	10	48	0	348	1549
% App. Total	2.7	72.5	24.9	0		27.8	9.3	63	0		3	94.7	2.2	0		83.3	2.9	13.8	0		
PHF	.700	.861	.560	.000	.812	.750	.417	.708	.000	.794	.528	.906	.583	.000	.907	.806	.500	.706	.000	.813	.855

Peak Hour Analysis From 07:00 to 08:45 - Peak 1 of 1
Peak Hour for Each Approach Begins at:

	07:30					07:30					07:30					07:15				
+0 mins.	**5**	98	**58**	0	**161**	4	1	8	0	13	6	**163**	3	0	**172**	66	4	9	0	79
+15 mins.	2	83	20	0	105	4	1	6	0	11	1	151	2	0	154	85	**5**	**17**	0	**107**
+30 mins.	2	88	22	0	112	**5**	0	8	0	13	3	123	**6**	0	132	**90**	1	11	0	102
+45 mins.	5	**110**	30	0	145	2	**3**	**12**	0	**17**	**9**	154	3	0	166	62	3	4	0	69
Total Volume	14	379	130	0	523	15	5	34	0	54	19	591	14	0	624	303	13	41	0	357
% App. Total	2.7	72.5	24.9	0		27.8	9.3	63	0		3	94.7	2.2	0		84.9	3.6	11.5	0	
PHF	.700	.861	.560	.000	.812	.750	.417	.708	.000	.794	.528	.906	.583	.000	.907	.842	.650	.603	.000	.834

GRAM Traffic Counting, inc.

3751 FM 1105, Bldg. A
Georgetown, TX 78626
512-832-8650

File Name : Site 1 - Lohman Ford Rd & Dawn Dr - AM
Site Code : 1_____
Start Date : 11/15/2023
Page No : 4

Groups Printed- Heavy Vehicles

	Lohman Ford Rd Southbound					Westbound					Lohman Ford Rd Northbound					Dawn Dr Eastbound					
Start Time	Left	Thru	Right	U-TURN	App. Total	Left	Thru	Right	U-TURN	App. Total	Left	Thru	Right	U-TURN	App. Total	Left	Thru	Right	U-TURN	App. Total	Int. Total
07:00	0	7	2	0	9	0	1	0	0	1	0	1	0	0	1	4	0	0	0	4	15
07:15	1	7	3	0	11	0	0	0	0	0	0	1	0	0	1	1	0	0	0	1	13
07:30	0	2	2	0	4	1	1	0	0	2	0	5	0	0	5	2	1	0	0	3	14
07:45	0	3	0	0	3	0	0	0	0	0	0	2	0	0	2	1	0	0	0	1	6
Total	1	19	7	0	27	1	2	0	0	3	0	9	0	0	9	8	1	0	0	9	48
08:00	0	1	1	0	2	0	0	0	0	0	0	8	0	0	8	0	0	1	0	1	11
08:15	0	5	2	0	7	0	0	0	0	0	0	4	0	0	4	1	0	0	0	1	12
08:30	0	5	0	0	5	0	0	0	0	0	0	9	0	0	9	1	0	0	0	1	15
08:45	0	2	1	0	3	0	0	0	0	0	0	1	0	0	1	1	0	0	0	1	5
Total	0	13	4	0	17	0	0	0	0	0	0	22	0	0	22	3	0	1	0	4	43
Grand Total	1	32	11	0	44	1	2	0	0	3	0	31	0	0	31	11	1	1	0	13	91
Apprch %	2.3	72.7	25	0		33.3	66.7	0	0		0	100	0	0		84.6	7.7	7.7	0		
Total %	1.1	35.2	12.1	0	48.4	1.1	2.2	0	0	3.3	0	34.1	0	0	34.1	12.1	1.1	1.1	0	14.3	

	Lohman Ford Rd Southbound					Westbound					Lohman Ford Rd Northbound					Dawn Dr Eastbound					
Start Time	Left	Thru	Right	U-TURN	App. Total	Left	Thru	Right	U-TURN	App. Total	Left	Thru	Right	U-TURN	App. Total	Left	Thru	Right	U-TURN	App. Total	Int. Total
Peak Hour Analysis From 07:00 to 08:45 - Peak 1 of 1																					
Peak Hour for Entire Intersection Begins at 07:00																					
07:00	0	**7**	2	0	9	0	**1**	0	0	1	0	1	0	0	1	**4**	0	0	0	**4**	**15**
07:15	**1**	7	**3**	0	**11**	0	0	0	0	0	0	1	0	0	1	1	0	0	0	1	13
07:30	0	2	2	0	4	**1**	1	0	0	**2**	0	**5**	0	0	**5**	2	**1**	0	0	3	14
07:45	0	3	0	0	3	0	0	0	0	0	0	2	0	0	2	1	0	0	0	1	6
Total Volume	1	19	7	0	27	1	2	0	0	3	0	9	0	0	9	8	1	0	0	9	48
% App. Total	3.7	70.4	25.9	0		33.3	66.7	0	0		0	100	0	0		88.9	11.1	0	0		
PHF	.250	.679	.583	.000	.614	.250	.500	.000	.000	.375	.000	.450	.000	.000	.450	.500	.250	.000	.000	.563	.800

Peak Hour Analysis From 07:00 to 08:45 - Peak 1 of 1
Peak Hour for Each Approach Begins at:

	07:00					07:00					07:45					07:00				
+0 mins.	0	**7**	2	0	9	0	**1**	0	0	1	0	2	0	0	2	**4**	0	0	0	**4**
+15 mins.	**1**	7	**3**	0	**11**	0	0	0	0	0	0	8	0	0	8	1	0	0	0	1
+30 mins.	0	2	2	0	4	**1**	1	0	0	**2**	0	4	0	0	4	2	**1**	0	0	3
+45 mins.	0	3	0	0	3	0	0	0	0	0	0	**9**	0	0	**9**	1	0	0	0	1
Total Volume	1	19	7	0	27	1	2	0	0	3	0	23	0	0	23	8	1	0	0	9
% App. Total	3.7	70.4	25.9	0		33.3	66.7	0	0		0	100	0	0		88.9	11.1	0	0	
PHF	.250	.679	.583	.000	.614	.250	.500	.000	.000	.375	.000	.639	.000	.000	.639	.500	.250	.000	.000	.563

GRAM Traffic Counting, inc.

3751 FM 1105, Bldg. A
Georgetown, TX 78626
512-832-8650

File Name : Site 1 - Lohman Ford Rd & Dawn Dr - AM
Site Code : 1_____
Start Date : 11/15/2023
Page No : 5

Groups Printed- Pedestrians

	Lohman Ford Rd Southbound					Westbound					Lohman Ford Rd Northbound					Dawn Dr Eastbound					
Start Time	Left	Thru	Right	U-TURN	App. Total	Left	Thru	Right	U-TURN	App. Total	Left	Thru	Right	U-TURN	App. Total	Left	Thru	Right	U-TURN	App. Total	Int. Total
07:00	0	0	0	0	0	0	0	0	0	0	0	0	0	0	0	0	0	0	0	0	0
07:15	0	0	0	0	0	0	0	0	0	0	0	0	0	0	0	0	0	0	0	0	0
07:30	0	0	0	0	0	0	0	0	0	0	0	0	0	0	0	0	0	0	0	0	0
07:45	0	0	0	0	0	0	0	0	0	0	0	0	0	0	0	0	0	0	0	0	0
Total	0	0	0	0	0	0	0	0	0	0	0	0	0	0	0	0	0	0	0	0	0
08:00	0	0	0	0	0	0	0	0	0	0	0	0	0	0	0	0	0	0	0	0	0
08:15	0	0	0	0	0	0	0	0	0	0	0	0	0	0	0	0	0	0	0	0	0
08:30	0	0	0	0	0	0	0	0	0	0	0	0	0	0	0	0	0	0	0	0	0
08:45	0	0	0	0	0	0	0	0	0	0	0	0	0	0	0	0	0	0	0	0	0
Total	0	0	0	0	0	0	0	0	0	0	0	0	0	0	0	0	0	0	0	0	0
Grand Total	0	0	0	0	0	0	0	0	0	0	0	0	0	0	0	0	0	0	0	0	0
Apprch %	0	0	0	0		0	0	0	0		0	0	0	0		0	0	0	0		
Total %																					

	Lohman Ford Rd Southbound					Westbound					Lohman Ford Rd Northbound					Dawn Dr Eastbound					
Start Time	Left	Thru	Right	U-TURN	App. Total	Left	Thru	Right	U-TURN	App. Total	Left	Thru	Right	U-TURN	App. Total	Left	Thru	Right	U-TURN	App. Total	Int. Total
Peak Hour Analysis From 07:00 to 08:45 - Peak 1 of 1																					
Peak Hour for Entire Intersection Begins at 07:00																					
07:00	0	0	0	0	0	0	0	0	0	0	0	0	0	0	0	0	0	0	0	0	0
07:15	0	0	0	0	0	0	0	0	0	0	0	0	0	0	0	0	0	0	0	0	0
07:30	0	0	0	0	0	0	0	0	0	0	0	0	0	0	0	0	0	0	0	0	0
07:45	0	0	0	0	0	0	0	0	0	0	0	0	0	0	0	0	0	0	0	0	0
Total Volume	0	0	0	0	0	0	0	0	0	0	0	0	0	0	0	0	0	0	0	0	0
% App. Total	0	0	0	0		0	0	0	0		0	0	0	0		0	0	0	0		
PHF	.000	.000	.000	.000	.000	.000	.000	.000	.000	.000	.000	.000	.000	.000	.000	.000	.000	.000	.000	.000	.000

Peak Hour Analysis From 07:00 to 08:45 - Peak 1 of 1
Peak Hour for Each Approach Begins at:

	07:00					07:00					07:00					07:00				
+0 mins.	0	0	0	0	0	0	0	0	0	0	0	0	0	0	0	0	0	0	0	0
+15 mins.	0	0	0	0	0	0	0	0	0	0	0	0	0	0	0	0	0	0	0	0
+30 mins.	0	0	0	0	0	0	0	0	0	0	0	0	0	0	0	0	0	0	0	0
+45 mins.	0	0	0	0	0	0	0	0	0	0	0	0	0	0	0	0	0	0	0	0
Total Volume	0	0	0	0	0	0	0	0	0	0	0	0	0	0	0	0	0	0	0	0
% App. Total	0	0	0	0		0	0	0	0		0	0	0	0		0	0	0	0	
PHF	.000	.000	.000	.000	.000	.000	.000	.000	.000	.000	.000	.000	.000	.000	.000	.000	.000	.000	.000	.000

GRAM Traffic Counting, inc.

3751 FM 1105, Bldg. A
Georgetown, TX 78626
512-832-8650

File Name : Site 1 - Lohman Ford Rd & Dawn Dr - PM
Site Code : 1_____
Start Date : 11/15/2023
Page No : 1

Groups Printed- Vehicles - Heavy Vehicles

	Lohman Ford Rd Southbound					Driveway Westbound					Lohman Ford Rd Northbound					Dawn Dr Eastbound					
Start Time	Left	Thru	Right	U-TURN	App. Total	Left	Thru	Right	U-TURN	App. Total	Left	Thru	Right	U-TURN	App. Total	Left	Thru	Right	U-TURN	App. Total	Int. Total
14:00	5	111	53	0	169	0	1	4	0	5	5	96	1	0	102	55	1	4	0	60	336
14:15	4	95	43	0	142	0	2	5	0	7	3	83	1	0	87	44	1	9	0	54	290
14:30	4	110	41	0	155	2	2	5	0	9	4	75	1	0	80	32	0	4	0	36	280
14:45	3	107	43	0	153	1	3	4	0	8	7	91	1	0	99	36	0	4	0	40	300
Total	16	423	180	0	619	3	8	18	0	29	19	345	4	0	368	167	2	21	0	190	1206
15:00	5	104	46	0	155	1	3	7	0	11	7	72	2	0	81	41	3	4	0	48	295
15:15	7	146	78	0	231	2	3	5	0	10	3	103	4	0	110	80	3	12	0	95	446
15:30	7	136	51	0	194	2	2	7	0	11	9	85	4	0	98	80	5	16	0	101	404
15:45	5	127	56	0	188	3	3	5	0	11	6	81	2	0	89	46	3	9	0	58	346
Total	24	513	231	0	768	8	11	24	0	43	25	341	12	0	378	247	14	41	0	302	1491
16:00	9	158	62	0	229	2	2	8	0	12	4	124	2	0	130	55	4	6	0	65	436
16:15	6	171	54	0	231	4	1	9	0	14	17	178	1	0	196	41	1	4	0	46	487
16:30	7	170	77	0	254	2	2	4	0	8	13	152	2	0	167	60	0	9	0	69	498
16:45	9	162	68	0	239	0	1	8	0	9	6	101	3	0	110	38	2	7	0	47	405
Total	31	661	261	0	953	8	6	29	0	43	40	555	8	0	603	194	7	26	0	227	1826
17:00	10	139	88	0	237	2	2	8	0	12	10	116	2	0	128	52	2	9	0	63	440
17:15	11	154	61	0	226	3	2	7	0	12	6	99	3	0	108	50	0	13	0	63	409
17:30	13	147	57	0	217	3	2	8	0	13	3	104	2	0	109	40	2	8	0	50	389
17:45	11	159	54	0	224	2	4	5	0	11	4	89	1	0	94	45	3	6	0	54	383
Total	45	599	260	0	904	10	10	28	0	48	23	408	8	0	439	187	7	36	0	230	1621
18:00	6	144	64	0	214	0	1	4	0	5	1	107	2	0	110	41	3	7	0	51	380
18:15	6	117	49	0	172	0	3	4	0	7	2	80	0	0	82	27	1	5	0	33	294
18:30	7	139	58	0	204	1	1	2	0	4	4	61	0	0	65	27	0	3	0	30	303
18:45	5	115	43	0	163	1	0	1	0	2	9	52	0	0	61	27	0	6	0	33	259
Total	24	515	214	0	753	2	5	11	0	18	16	300	2	0	318	122	4	21	0	147	1236
Grand Total	140	2711	1146	0	3997	31	40	110	0	181	123	1949	34	0	2106	917	34	145	0	1096	7380
Apprch %	3.5	67.8	28.7	0		17.1	22.1	60.8	0		5.8	92.5	1.6	0		83.7	3.1	13.2	0		
Total %	1.9	36.7	15.5	0	54.2	0.4	0.5	1.5	0	2.5	1.7	26.4	0.5	0	28.5	12.4	0.5	2	0	14.9	
Vehicles	137	2686	1128	0	3951	30	39	109	0	178	123	1921	34	0	2078	905	33	139	0	1077	7284
% Vehicles	97.9	99.1	98.4	0	98.8	96.8	97.5	99.1	0	98.3	100	98.6	100	0	98.7	98.7	97.1	95.9	0	98.3	98.7
Heavy Vehicles	3	25	18	0	46	1	1	1	0	3	0	28	0	0	28	12	1	6	0	19	96
% Heavy Vehicles	2.1	0.9	1.6	0	1.2	3.2	2.5	0.9	0	1.7	0	1.4	0	0	1.3	1.3	2.9	4.1	0	1.7	1.3

GRAM Traffic Counting, inc.

3751 FM 1105, Bldg. A
Georgetown, TX 78626
512-832-8650

File Name : Site 1 - Lohman Ford Rd & Dawn Dr - PM
Site Code : 1_____
Start Date : 11/15/2023
Page No : 2

	Lohman Ford Rd Southbound					Driveway Westbound					Lohman Ford Rd Northbound					Dawn Dr Eastbound					
Start Time	Left	Thru	Right	U-TURN	App. Total	Left	Thru	Right	U-TURN	App. Total	Left	Thru	Right	U-TURN	App. Total	Left	Thru	Right	U-TURN	App. Total	Int. Total
Peak Hour Analysis From 14:00 to 15:45 - Peak 1 of 1																					
Peak Hour for Entire Intersection Begins at 15:00																					
15:00	5	104	46	0	155	1	**3**	**7**	0	**11**	7	72	2	0	81	41	3	4	0	48	295
15:15	**7**	**146**	**78**	0	**231**	2	3	5	0	10	3	**103**	**4**	0	**110**	**80**	3	12	0	95	**446**
15:30	7	136	51	0	194	2	2	7	0	11	**9**	85	4	0	98	80	**5**	**16**	0	**101**	404
15:45	5	127	56	0	188	**3**	3	5	0	11	6	81	2	0	89	46	3	9	0	58	346
Total Volume	24	513	231	0	768	8	11	24	0	43	25	341	12	0	378	247	14	41	0	302	1491
% App. Total	3.1	66.8	30.1	0		18.6	25.6	55.8	0		6.6	90.2	3.2	0		81.8	4.6	13.6	0		
PHF	.857	.878	.740	.000	.831	.667	.917	.857	.000	.977	.694	.828	.750	.000	.859	.772	.700	.641	.000	.748	.836
Vehicles	23	507	224	0	754	8	10	23	0	41	25	336	12	0	373	243	13	37	0	293	1461
% Vehicles	95.8	98.8	97.0	0	98.2	100	90.9	95.8	0	95.3	100	98.5	100	0	98.7	98.4	92.9	90.2	0	97.0	98.0
Heavy Vehicles	1	6	7	0	14	0	1	1	0	2	0	5	0	0	5	4	1	4	0	9	30
% Heavy Vehicles	4.2	1.2	3.0	0	1.8	0	9.1	4.2	0	4.7	0	1.5	0	0	1.3	1.6	7.1	9.8	0	3.0	2.0

Peak Hour Analysis From 14:00 to 15:45 - Peak 1 of 1
Peak Hour for Each Approach Begins at:

	15:00					15:00					14:45					15:00				
+0 mins.	5	104	46	0	155	1	**3**	**7**	0	**11**	7	91	1	0	99	41	3	4	0	48
+15 mins.	**7**	**146**	**78**	0	**231**	2	3	5	0	10	7	72	2	0	81	**80**	3	12	0	95
+30 mins.	7	136	51	0	194	2	2	7	0	11	3	**103**	**4**	0	**110**	80	**5**	**16**	0	**101**
+45 mins.	5	127	56	0	188	**3**	3	5	0	11	**9**	85	4	0	98	46	3	9	0	58
Total Volume	24	513	231	0	768	8	11	24	0	43	26	351	11	0	388	247	14	41	0	302
% App. Total	3.1	66.8	30.1	0		18.6	25.6	55.8	0		6.7	90.5	2.8	0		81.8	4.6	13.6	0	
PHF	.857	.878	.740	.000	.831	.667	.917	.857	.000	.977	.722	.852	.688	.000	.882	.772	.700	.641	.000	.748
Vehicles	23	507	224	0	754	8	10	23	0	41	26	348	11	0	385	243	13	37	0	293
% Vehicles	95.8	98.8	97	0	98.2	100	90.9	95.8	0	95.3	100	99.1	100	0	99.2	98.4	92.9	90.2	0	97
Heavy Vehicles	1	6	7	0	14	0	1	1	0	2	0	3	0	0	3	4	1	4	0	9
% Heavy Vehicles	4.2	1.2	3	0	1.8	0	9.1	4.2	0	4.7	0	0.9	0	0	0.8	1.6	7.1	9.8	0	3

GRAM Traffic Counting, inc.

3751 FM 1105, Bldg. A
Georgetown, TX 78626
512-832-8650

File Name : Site 1 - Lohman Ford Rd & Dawn Dr - PM
Site Code : 1_____
Start Date : 11/15/2023
Page No : 3

Groups Printed- Vehicles

	Lohman Ford Rd Southbound					Driveway Westbound					Lohman Ford Rd Northbound					Dawn Dr Eastbound					
Start Time	Left	Thru	Right	U-TURN	App. Total	Left	Thru	Right	U-TURN	App. Total	Left	Thru	Right	U-TURN	App. Total	Left	Thru	Right	U-TURN	App. Total	Int. Total
14:00	5	109	52	0	166	0	1	4	0	5	5	96	1	0	102	54	1	4	0	59	332
14:15	4	93	43	0	140	0	2	5	0	7	3	82	1	0	86	43	1	9	0	53	286
14:30	4	110	39	0	153	2	2	5	0	9	4	73	1	0	78	32	0	4	0	36	276
14:45	3	104	42	0	149	1	3	4	0	8	7	90	1	0	98	36	0	3	0	39	294
Total	16	416	176	0	608	3	8	18	0	29	19	341	4	0	364	165	2	20	0	187	1188
15:00	5	103	43	0	151	1	3	7	0	11	7	72	2	0	81	41	3	4	0	48	291
15:15	6	142	77	0	225	2	2	4	0	8	3	102	4	0	109	76	2	9	0	87	429
15:30	7	136	50	0	193	2	2	7	0	11	9	84	4	0	97	80	5	15	0	100	401
15:45	5	126	54	0	185	3	3	5	0	11	6	78	2	0	86	46	3	9	0	58	340
Total	23	507	224	0	754	8	10	23	0	41	25	336	12	0	373	243	13	37	0	293	1461
16:00	8	155	60	0	223	2	2	8	0	12	4	122	2	0	128	55	4	6	0	65	428
16:15	6	171	53	0	230	4	1	9	0	14	17	177	1	0	195	39	1	3	0	43	482
16:30	6	169	77	0	252	1	2	4	0	7	13	149	2	0	164	59	0	9	0	68	491
16:45	9	159	67	0	235	0	1	8	0	9	6	99	3	0	108	38	2	7	0	47	399
Total	29	654	257	0	940	7	6	29	0	42	40	547	8	0	595	191	7	25	0	223	1800
17:00	10	138	87	0	235	2	2	8	0	12	10	114	2	0	126	52	2	9	0	63	436
17:15	11	153	61	0	225	3	2	7	0	12	6	98	3	0	107	49	0	13	0	62	406
17:30	13	147	57	0	217	3	2	8	0	13	3	103	2	0	108	40	2	8	0	50	388
17:45	11	157	54	0	222	2	4	5	0	11	4	87	1	0	92	45	3	6	0	54	379
Total	45	595	259	0	899	10	10	28	0	48	23	402	8	0	433	186	7	36	0	229	1609
18:00	6	144	64	0	214	0	1	4	0	5	1	103	2	0	106	41	3	7	0	51	376
18:15	6	117	47	0	170	0	3	4	0	7	2	79	0	0	81	26	1	5	0	32	290
18:30	7	138	58	0	203	1	1	2	0	4	4	61	0	0	65	26	0	3	0	29	301
18:45	5	115	43	0	163	1	0	1	0	2	9	52	0	0	61	27	0	6	0	33	259
Total	24	514	212	0	750	2	5	11	0	18	16	295	2	0	313	120	4	21	0	145	1226
Grand Total	137	2686	1128	0	3951	30	39	109	0	178	123	1921	34	0	2078	905	33	139	0	1077	7284
Apprch %	3.5	68	28.5	0		16.9	21.9	61.2	0		5.9	92.4	1.6	0		84	3.1	12.9	0		
Total %	1.9	36.9	15.5	0	54.2	0.4	0.5	1.5	0	2.4	1.7	26.4	0.5	0	28.5	12.4	0.5	1.9	0	14.8	

	Lohman Ford Rd Southbound					Driveway Westbound					Lohman Ford Rd Northbound					Dawn Dr Eastbound					
Start Time	Left	Thru	Right	U-TURN	App. Total	Left	Thru	Right	U-TURN	App. Total	Left	Thru	Right	U-TURN	App. Total	Left	Thru	Right	U-TURN	App. Total	Int. Total
Peak Hour Analysis From 14:00 to 15:45 - Peak 1 of 1																					
Peak Hour for Entire Intersection Begins at 15:00																					
15:00	5	103	43	0	151	1	**3**	**7**	0	**11**	7	72	2	0	81	41	3	4	0	48	291
15:15	6	**142**	**77**	0	**225**	2	2	4	0	8	3	**102**	**4**	0	**109**	76	2	9	0	87	**429**
15:30	**7**	136	50	0	193	2	2	7	0	11	**9**	84	4	0	97	**80**	**5**	**15**	0	**100**	401
15:45	5	126	54	0	185	**3**	3	5	0	11	6	78	2	0	86	46	3	9	0	58	340
Total Volume	23	507	224	0	754	8	10	23	0	41	25	336	12	0	373	243	13	37	0	293	1461
% App. Total	3.1	67.2	29.7	0		19.5	24.4	56.1	0		6.7	90.1	3.2	0		82.9	4.4	12.6	0		
PHF	.821	.893	.727	.000	.838	.667	.833	.821	.000	.932	.694	.824	.750	.000	.856	.759	.650	.617	.000	.733	.851

GRAM Traffic Counting, inc.

3751 FM 1105, Bldg. A
Georgetown, TX 78626
512-832-8650

File Name : Site 1 - Lohman Ford Rd & Dawn Dr - PM
Site Code : 1_____
Start Date : 11/15/2023
Page No : 4

	Lohman Ford Rd Southbound					Driveway Westbound					Lohman Ford Rd Northbound					Dawn Dr Eastbound					
Start Time	Left	Thru	Right	U-TURN	App. Total	Left	Thru	Right	U-TURN	App. Total	Left	Thru	Right	U-TURN	App. Total	Left	Thru	Right	U-TURN	App. Total	Int. Total
Peak Hour Analysis From 14:00 to 15:45 - Peak 1 of 1																					
Peak Hour for Each Approach Begins at:																					
	15:00					15:00					14:45					15:00					
+0 mins.	5	103	43	0	151	1	**3**	**7**	0	**11**	7	90	1	0	98	41	3	4	0	48	
+15 mins.	6	**142**	**77**	0	**225**	2	2	4	0	8	7	72	2	0	81	76	2	9	0	87	
+30 mins.	**7**	136	50	0	193	2	2	7	0	11	3	**102**	**4**	0	**109**	**80**	**5**	**15**	0	**100**	
+45 mins.	5	126	54	0	185	**3**	3	5	0	11	**9**	84	4	0	97	46	3	9	0	58	
Total Volume	23	507	224	0	754	8	10	23	0	41	26	348	11	0	385	243	13	37	0	293	
% App. Total	3.1	67.2	29.7	0		19.5	24.4	56.1	0		6.8	90.4	2.9	0		82.9	4.4	12.6	0		
PHF	.821	.893	.727	.000	.838	.667	.833	.821	.000	.932	.722	.853	.688	.000	.883	.759	.650	.617	.000	.733	

GRAM Traffic Counting, inc.

3751 FM 1105, Bldg. A
Georgetown, TX 78626
512-832-8650

File Name : Site 1 - Lohman Ford Rd & Dawn Dr - PM
Site Code : 1_____
Start Date : 11/15/2023
Page No : 5

Groups Printed- Heavy Vehicles

	Lohman Ford Rd Southbound					Driveway Westbound					Lohman Ford Rd Northbound					Dawn Dr Eastbound					
Start Time	Left	Thru	Right	U-TURN	App. Total	Left	Thru	Right	U-TURN	App. Total	Left	Thru	Right	U-TURN	App. Total	Left	Thru	Right	U-TURN	App. Total	Int. Total
14:00	0	2	1	0	3	0	0	0	0	0	0	0	0	0	0	1	0	0	0	1	4
14:15	0	2	0	0	2	0	0	0	0	0	0	1	0	0	1	1	0	0	0	1	4
14:30	0	0	2	0	2	0	0	0	0	0	0	2	0	0	2	0	0	0	0	0	4
14:45	0	3	1	0	4	0	0	0	0	0	0	1	0	0	1	0	0	1	0	1	6
Total	0	7	4	0	11	0	0	0	0	0	0	4	0	0	4	2	0	1	0	3	18
15:00	0	1	3	0	4	0	0	0	0	0	0	0	0	0	0	0	0	0	0	0	4
15:15	1	4	1	0	6	0	1	1	0	2	0	1	0	0	1	4	1	3	0	8	17
15:30	0	0	1	0	1	0	0	0	0	0	0	1	0	0	1	0	0	1	0	1	3
15:45	0	1	2	0	3	0	0	0	0	0	0	3	0	0	3	0	0	0	0	0	6
Total	1	6	7	0	14	0	1	1	0	2	0	5	0	0	5	4	1	4	0	9	30
16:00	1	3	2	0	6	0	0	0	0	0	0	2	0	0	2	0	0	0	0	0	8
16:15	0	0	1	0	1	0	0	0	0	0	0	1	0	0	1	2	0	1	0	3	5
16:30	1	1	0	0	2	1	0	0	0	1	0	3	0	0	3	1	0	0	0	1	7
16:45	0	3	1	0	4	0	0	0	0	0	0	2	0	0	2	0	0	0	0	0	6
Total	2	7	4	0	13	1	0	0	0	1	0	8	0	0	8	3	0	1	0	4	26
17:00	0	1	1	0	2	0	0	0	0	0	0	2	0	0	2	0	0	0	0	0	4
17:15	0	1	0	0	1	0	0	0	0	0	0	1	0	0	1	1	0	0	0	1	3
17:30	0	0	0	0	0	0	0	0	0	0	0	1	0	0	1	0	0	0	0	0	1
17:45	0	2	0	0	2	0	0	0	0	0	0	2	0	0	2	0	0	0	0	0	4
Total	0	4	1	0	5	0	0	0	0	0	0	6	0	0	6	1	0	0	0	1	12
18:00	0	0	0	0	0	0	0	0	0	0	0	4	0	0	4	0	0	0	0	0	4
18:15	0	0	2	0	2	0	0	0	0	0	0	1	0	0	1	1	0	0	0	1	4
18:30	0	1	0	0	1	0	0	0	0	0	0	0	0	0	0	1	0	0	0	1	2
18:45	0	0	0	0	0	0	0	0	0	0	0	0	0	0	0	0	0	0	0	0	0
Total	0	1	2	0	3	0	0	0	0	0	0	5	0	0	5	2	0	0	0	2	10
Grand Total	3	25	18	0	46	1	1	1	0	3	0	28	0	0	28	12	1	6	0	19	96
Apprch %	6.5	54.3	39.1	0		33.3	33.3	33.3	0		0	100	0	0		63.2	5.3	31.6	0		
Total %	3.1	26	18.8	0	47.9	1	1	1	0	3.1	0	29.2	0	0	29.2	12.5	1	6.2	0	19.8	

	Lohman Ford Rd Southbound					Driveway Westbound					Lohman Ford Rd Northbound					Dawn Dr Eastbound					
Start Time	Left	Thru	Right	U-TURN	App. Total	Left	Thru	Right	U-TURN	App. Total	Left	Thru	Right	U-TURN	App. Total	Left	Thru	Right	U-TURN	App. Total	Int. Total
Peak Hour Analysis From 14:00 to 15:45 - Peak 1 of 1																					
Peak Hour for Entire Intersection Begins at 14:30																					
14:30	0	0	2	0	2	0	0	0	0	0	0	**2**	0	0	**2**	0	0	0	0	0	4
14:45	0	3	1	0	4	0	0	0	0	0	0	1	0	0	1	0	0	1	0	1	6
15:00	0	1	**3**	0	4	0	0	0	0	0	0	0	0	0	0	0	0	0	0	0	4
15:15	**1**	**4**	1	0	**6**	0	**1**	**1**	0	**2**	0	1	0	0	1	**4**	**1**	**3**	0	**8**	**17**
Total Volume	1	8	7	0	16	0	1	1	0	2	0	4	0	0	4	4	1	4	0	9	31
% App. Total	6.2	50	43.8	0		0	50	50	0		0	100	0	0		44.4	11.1	44.4	0		
PHF	.250	.500	.583	.000	.667	.000	.250	.250	.000	.250	.000	.500	.000	.000	.500	.250	.250	.333	.000	.281	.456

GRAM Traffic Counting, inc.

3751 FM 1105, Bldg. A
Georgetown, TX 78626
512-832-8650

File Name : Site 1 - Lohman Ford Rd & Dawn Dr - PM
Site Code : 1_____
Start Date : 11/15/2023
Page No : 6

	Lohman Ford Rd Southbound					Driveway Westbound					Lohman Ford Rd Northbound					Dawn Dr Eastbound					
Start Time	Left	Thru	Right	U-TURN	App. Total	Left	Thru	Right	U-TURN	App. Total	Left	Thru	Right	U-TURN	App. Total	Left	Thru	Right	U-TURN	App. Total	Int. Total

Peak Hour Analysis From 14:00 to 15:45 - Peak 1 of 1
Peak Hour for Each Approach Begins at:

	14:30					14:30					15:00					14:45				
+0 mins.	0	0	2	0	2	0	0	0	0	0	0	0	0	0	0	0	0	1	0	1
+15 mins.	0	3	1	0	4	0	0	0	0	0	0	1	0	0	1	0	0	0	0	0
+30 mins.	0	1	**3**	0	4	0	0	0	0	0	0	1	0	0	1	**4**	**1**	**3**	0	**8**
+45 mins.	**1**	**4**	1	0	**6**	0	**1**	**1**	0	**2**	0	**3**	0	0	**3**	0	0	1	0	1
Total Volume	1	8	7	0	16	0	1	1	0	2	0	5	0	0	5	4	1	5	0	10
% App. Total	6.2	50	43.8	0		0	50	50	0		0	100	0	0		40	10	50	0	
PHF	.250	.500	.583	.000	.667	.000	.250	.250	.000	.250	.000	.417	.000	.000	.417	.250	.250	.417	.000	.313

GRAM Traffic Counting, inc.

3751 FM 1105, Bldg. A
Georgetown, TX 78626
512-832-8650

File Name : Site 1 - Lohman Ford Rd & Dawn Dr - PM
Site Code : 1_____
Start Date : 11/15/2023
Page No : 7

Groups Printed- Pedestrians

	Lohman Ford Rd Southbound					Driveway Westbound					Lohman Ford Rd Northbound					Dawn Dr Eastbound					
Start Time	Left	Thru	Right	U-TURN	App. Total	Left	Thru	Right	U-TURN	App. Total	Left	Thru	Right	U-TURN	App. Total	Left	Thru	Right	U-TURN	App. Total	Int. Total
14:00	0	0	0	0	0	0	0	0	0	0	0	0	0	0	0	0	0	0	0	0	0
14:15	0	0	0	0	0	0	0	0	0	0	0	0	0	0	0	0	0	0	0	0	0
14:30	0	0	0	0	0	0	0	0	0	0	0	0	0	0	0	0	0	0	0	0	0
14:45	0	0	0	0	0	0	0	0	0	0	0	0	0	0	0	0	0	0	0	0	0
Total	0	0	0	0	0	0	0	0	0	0	0	0	0	0	0	0	0	0	0	0	0
15:00	0	0	0	0	0	0	0	0	0	0	0	0	0	0	0	0	0	0	0	0	0
15:15	0	0	0	0	0	0	0	0	0	0	0	0	0	0	0	0	0	0	0	0	0
15:30	0	0	0	0	0	0	0	0	0	0	0	0	0	0	0	0	0	0	0	0	0
15:45	0	0	0	0	0	0	0	0	0	0	0	0	0	0	0	0	0	0	0	0	0
Total	0	0	0	0	0	0	0	0	0	0	0	0	0	0	0	0	0	0	0	0	0
16:00	0	0	0	0	0	0	0	0	0	0	0	0	0	0	0	0	0	0	0	0	0
16:15	0	0	0	0	0	0	0	0	0	0	0	0	0	0	0	0	0	0	0	0	0
16:30	0	0	0	0	0	0	0	0	0	0	0	0	0	0	0	0	0	0	0	0	0
16:45	0	0	0	0	0	0	0	0	0	0	0	0	0	0	0	0	0	0	0	0	0
Total	0	0	0	0	0	0	0	0	0	0	0	0	0	0	0	0	0	0	0	0	0
17:00	0	0	0	0	0	0	0	0	0	0	0	0	0	0	0	0	0	0	0	0	0
17:15	0	0	0	0	0	0	0	0	0	0	0	0	0	0	0	0	0	0	0	0	0
17:30	0	0	0	0	0	0	0	0	0	0	0	0	0	0	0	0	0	0	0	0	0
17:45	0	0	0	0	0	0	0	0	0	0	0	0	0	0	0	0	0	0	0	0	0
Total	0	0	0	0	0	0	0	0	0	0	0	0	0	0	0	0	0	0	0	0	0
18:00	0	0	0	0	0	0	0	0	0	0	0	0	0	0	0	0	0	0	0	0	0
18:15	0	0	0	0	0	0	0	0	0	0	0	0	0	0	0	0	0	0	0	0	0
18:30	0	0	0	0	0	0	0	0	0	0	0	0	0	0	0	0	0	0	0	0	0
18:45	0	0	0	0	0	0	0	0	0	0	0	0	0	0	0	0	0	0	0	0	0
Total	0	0	0	0	0	0	0	0	0	0	0	0	0	0	0	0	0	0	0	0	0
Grand Total	0	0	0	0	0	0	0	0	0	0	0	0	0	0	0	0	0	0	0	0	0
Apprch %	0	0	0	0		0	0	0	0		0	0	0	0		0	0	0	0		
Total %																					

	Lohman Ford Rd Southbound					Driveway Westbound					Lohman Ford Rd Northbound					Dawn Dr Eastbound					
Start Time	Left	Thru	Right	U-TURN	App. Total	Left	Thru	Right	U-TURN	App. Total	Left	Thru	Right	U-TURN	App. Total	Left	Thru	Right	U-TURN	App. Total	Int. Total
Peak Hour Analysis From 14:00 to 15:45 - Peak 1 of 1																					
Peak Hour for Entire Intersection Begins at 14:00																					
14:00	0	0	0	0	0	0	0	0	0	0	0	0	0	0	0	0	0	0	0	0	0
14:15	0	0	0	0	0	0	0	0	0	0	0	0	0	0	0	0	0	0	0	0	0
14:30	0	0	0	0	0	0	0	0	0	0	0	0	0	0	0	0	0	0	0	0	0
14:45	0	0	0	0	0	0	0	0	0	0	0	0	0	0	0	0	0	0	0	0	0
Total Volume	0	0	0	0	0	0	0	0	0	0	0	0	0	0	0	0	0	0	0	0	0
% App. Total	0	0	0	0		0	0	0	0		0	0	0	0		0	0	0	0		
PHF	.000	.000	.000	.000	.000	.000	.000	.000	.000	.000	.000	.000	.000	.000	.000	.000	.000	.000	.000	.000	.000

GRAM Traffic Counting, inc.

3751 FM 1105, Bldg. A
Georgetown, TX 78626
512-832-8650

File Name : Site 1 - Lohman Ford Rd & Dawn Dr - PM
Site Code : 1_____
Start Date : 11/15/2023
Page No : 8

	Lohman Ford Rd Southbound					Driveway Westbound					Lohman Ford Rd Northbound					Dawn Dr Eastbound					
Start Time	Left	Thru	Right	U-TURN	App. Total	Left	Thru	Right	U-TURN	App. Total	Left	Thru	Right	U-TURN	App. Total	Left	Thru	Right	U-TURN	App. Total	Int. Total
Peak Hour Analysis From 14:00 to 15:45 - Peak 1 of 1																					
Peak Hour for Each Approach Begins at:																					
	14:00					14:00					14:00					14:00					
+0 mins.	0	0	0	0	0	0	0	0	0	0	0	0	0	0	0	0	0	0	0	0	
+15 mins.	0	0	0	0	0	0	0	0	0	0	0	0	0	0	0	0	0	0	0	0	
+30 mins.	0	0	0	0	0	0	0	0	0	0	0	0	0	0	0	0	0	0	0	0	
+45 mins.	0	0	0	0	0	0	0	0	0	0	0	0	0	0	0	0	0	0	0	0	
Total Volume	0	0	0	0	0	0	0	0	0	0	0	0	0	0	0	0	0	0	0	0	
% App. Total	0	0	0	0		0	0	0	0		0	0	0	0		0	0	0	0		
PHF	.000	.000	.000	.000	.000	.000	.000	.000	.000	.000	.000	.000	.000	.000	.000	.000	.000	.000	.000	.000	

GRAM Traffic Counting, inc.

3751 FM 1105, Bldg. A
Georgetown, TX 78626
512-832-8650

File Name : Site 2 - Lohman Ford Rd & Boggy Ford Rd - AM
Site Code : 2
Start Date : 11/15/2023
Page No : 1

Groups Printed- Vehicles - Heavy Vehicles

	Lohman Ford Rd Southbound					Shoreline Ranch Rd Westbound					Lohman Ford Rd Northbound					Boggy Ford Rd Eastbound					
Start Time	Left	Thru	Right	U-TURN	App. Total	Left	Thru	Right	U-TURN	App. Total	Left	Thru	Right	U-TURN	App. Total	Left	Thru	Right	U-TURN	App. Total	Int. Total
07:00	7	8	13	0	28	0	0	4	0	4	0	33	0	0	33	90	1	2	0	93	158
07:15	5	20	44	0	69	0	1	2	0	3	2	50	0	0	52	134	0	2	0	136	260
07:30	5	30	53	0	88	0	0	1	0	1	6	45	0	0	51	110	3	3	0	116	256
07:45	4	29	60	0	93	1	0	2	0	3	4	56	2	0	62	100	0	5	0	105	263
Total	21	87	170	0	278	1	1	9	0	11	12	184	2	0	198	434	4	12	0	450	937
08:00	2	24	34	0	60	0	0	7	0	7	4	43	0	0	47	95	0	3	0	98	212
08:15	2	16	53	0	71	0	0	3	0	3	5	45	0	0	50	127	1	2	0	130	254
08:30	1	36	65	0	102	0	0	1	0	1	0	36	0	0	36	97	1	3	0	101	240
08:45	2	29	40	0	71	0	2	4	0	6	3	31	0	0	34	74	2	11	0	87	198
Total	7	105	192	0	304	0	2	15	0	17	12	155	0	0	167	393	4	19	0	416	904
Grand Total	28	192	362	0	582	1	3	24	0	28	24	339	2	0	365	827	8	31	0	866	1841
Apprch %	4.8	33	62.2	0		3.6	10.7	85.7	0		6.6	92.9	0.5	0		95.5	0.9	3.6	0		
Total %	1.5	10.4	19.7	0	31.6	0.1	0.2	1.3	0	1.5	1.3	18.4	0.1	0	19.8	44.9	0.4	1.7	0	47	
Vehicles	25	187	351	0	563	1	3	24	0	28	23	335	2	0	360	819	7	31	0	857	1808
% Vehicles	89.3	97.4	97	0	96.7	100	100	100	0	100	95.8	98.8	100	0	98.6	99	87.5	100	0	99	98.2
Heavy Vehicles	3	5	11	0	19	0	0	0	0	0	1	4	0	0	5	8	1	0	0	9	33
% Heavy Vehicles	10.7	2.6	3	0	3.3	0	0	0	0	0	4.2	1.2	0	0	1.4	1	12.5	0	0	1	1.8

	Lohman Ford Rd Southbound					Shoreline Ranch Rd Westbound					Lohman Ford Rd Northbound					Boggy Ford Rd Eastbound					
Start Time	Left	Thru	Right	U-TURN	App. Total	Left	Thru	Right	U-TURN	App. Total	Left	Thru	Right	U-TURN	App. Total	Left	Thru	Right	U-TURN	App. Total	Int. Total
Peak Hour Analysis From 07:00 to 08:45 - Peak 1 of 1																					
Peak Hour for Entire Intersection Begins at 07:15																					
07:15	**5**	20	44	0	69	0	**1**	2	0	3	2	50	0	0	52	**134**	0	2	0	**136**	260
07:30	5	**30**	53	0	88	0	0	1	0	1	**6**	45	0	0	51	110	**3**	3	0	116	256
07:45	4	29	**60**	0	**93**	**1**	0	2	0	3	4	**56**	**2**	0	**62**	100	0	**5**	0	105	**263**
08:00	2	24	34	0	60	0	0	**7**	0	**7**	4	43	0	0	47	95	0	3	0	98	212
Total Volume	16	103	191	0	310	1	1	12	0	14	16	194	2	0	212	439	3	13	0	455	991
% App. Total	5.2	33.2	61.6	0		7.1	7.1	85.7	0		7.5	91.5	0.9	0		96.5	0.7	2.9	0		
PHF	.800	.858	.796	.000	.833	.250	.250	.429	.000	.500	.667	.866	.250	.000	.855	.819	.250	.650	.000	.836	.942
Vehicles	15	100	186	0	301	1	1	12	0	14	16	192	2	0	210	437	2	13	0	452	977
% Vehicles	93.8	97.1	97.4	0	97.1	100	100	100	0	100	100	99.0	100	0	99.1	99.5	66.7	100	0	99.3	98.6
Heavy Vehicles	1	3	5	0	9	0	0	0	0	0	0	2	0	0	2	2	1	0	0	3	14
% Heavy Vehicles	6.3	2.9	2.6	0	2.9	0	0	0	0	0	0	1.0	0	0	0.9	0.5	33.3	0	0	0.7	1.4

GRAM Traffic Counting, inc.

3751 FM 1105, Bldg. A
Georgetown, TX 78626
512-832-8650

File Name : Site 2 - Lohman Ford Rd & Boggy Ford Rd - AM
Site Code : 2
Start Date : 11/15/2023
Page No : 2

	Lohman Ford Rd Southbound					Shoreline Ranch Rd Westbound					Lohman Ford Rd Northbound					Boggy Ford Rd Eastbound					
Start Time	Left	Thru	Right	U-TURN	App. Total	Left	Thru	Right	U-TURN	App. Total	Left	Thru	Right	U-TURN	App. Total	Left	Thru	Right	U-TURN	App. Total	Int. Total
Peak Hour Analysis From 07:00 to 08:45 - Peak 1 of 1																					
Peak Hour for Each Approach Begins at:																					
	07:45					08:00					07:15					07:15					
+0 mins.	**4**	29	60	0	93	0	0	**7**	0	**7**	2	50	0	0	52	**134**	0	2	0	**136**	
+15 mins.	2	24	34	0	60	0	0	3	0	3	**6**	45	0	0	51	110	**3**	3	0	116	
+30 mins.	2	16	53	0	71	0	0	1	0	1	4	**56**	**2**	0	**62**	100	0	**5**	0	105	
+45 mins.	1	**36**	**65**	0	**102**	0	**2**	4	0	6	4	43	0	0	47	95	0	3	0	98	
Total Volume	9	105	212	0	326	0	2	15	0	17	16	194	2	0	212	439	3	13	0	455	
% App. Total	2.8	32.2	65	0		0	11.8	88.2	0		7.5	91.5	0.9	0		96.5	0.7	2.9	0		
PHF	.563	.729	.815	.000	.799	.000	.250	.536	.000	.607	.667	.866	.250	.000	.855	.819	.250	.650	.000	.836	
Vehicles	9	102	206	0	317	0	2	15	0	17	16	192	2	0	210	437	2	13	0	452	
% Vehicles	100	97.1	97.2	0	97.2	0	100	100	0	100	100	99	100	0	99.1	99.5	66.7	100	0	99.3	
Heavy Vehicles	0	3	6	0	9	0	0	0	0	0	0	2	0	0	2	2	1	0	0	3	
% Heavy Vehicles	0	2.9	2.8	0	2.8	0	0	0	0	0	0	1	0	0	0.9	0.5	33.3	0	0	0.7	

GRAM Traffic Counting, inc.

3751 FM 1105, Bldg. A
Georgetown, TX 78626
512-832-8650

File Name : Site 2 - Lohman Ford Rd & Boggy Ford Rd - AM
Site Code : 2
Start Date : 11/15/2023
Page No : 3

Groups Printed- Vehicles

	Lohman Ford Rd Southbound					Shoreline Ranch Rd Westbound					Lohman Ford Rd Northbound					Boggy Ford Rd Eastbound					
Start Time	Left	Thru	Right	U-TURN	App. Total	Left	Thru	Right	U-TURN	App. Total	Left	Thru	Right	U-TURN	App. Total	Left	Thru	Right	U-TURN	App. Total	Int. Total
07:00	6	7	12	0	25	0	0	4	0	4	0	33	0	0	33	90	1	2	0	93	155
07:15	4	19	41	0	64	0	1	2	0	3	2	50	0	0	52	134	0	2	0	136	255
07:30	5	30	52	0	87	0	0	1	0	1	6	44	0	0	50	110	2	3	0	115	253
07:45	4	28	60	0	92	1	0	2	0	3	4	56	2	0	62	98	0	5	0	103	260
Total	19	84	165	0	268	1	1	9	0	11	12	183	2	0	197	432	3	12	0	447	923
08:00	2	23	33	0	58	0	0	7	0	7	4	42	0	0	46	95	0	3	0	98	209
08:15	2	16	50	0	68	0	0	3	0	3	4	44	0	0	48	124	1	2	0	127	246
08:30	1	35	63	0	99	0	0	1	0	1	0	36	0	0	36	95	1	3	0	99	235
08:45	1	29	40	0	70	0	2	4	0	6	3	30	0	0	33	73	2	11	0	86	195
Total	6	103	186	0	295	0	2	15	0	17	11	152	0	0	163	387	4	19	0	410	885
Grand Total	25	187	351	0	563	1	3	24	0	28	23	335	2	0	360	819	7	31	0	857	1808
Apprch %	4.4	33.2	62.3	0		3.6	10.7	85.7	0		6.4	93.1	0.6	0		95.6	0.8	3.6	0		
Total %	1.4	10.3	19.4	0	31.1	0.1	0.2	1.3	0	1.5	1.3	18.5	0.1	0	19.9	45.3	0.4	1.7	0	47.4	

	Lohman Ford Rd Southbound					Shoreline Ranch Rd Westbound					Lohman Ford Rd Northbound					Boggy Ford Rd Eastbound					
Start Time	Left	Thru	Right	U-TURN	App. Total	Left	Thru	Right	U-TURN	App. Total	Left	Thru	Right	U-TURN	App. Total	Left	Thru	Right	U-TURN	App. Total	Int. Total
Peak Hour Analysis From 07:00 to 08:45 - Peak 1 of 1																					
Peak Hour for Entire Intersection Begins at 07:15																					
07:15	4	19	41	0	64	0	**1**	2	0	3	2	50	0	0	52	**134**	0	2	0	**136**	255
07:30	**5**	**30**	52	0	87	0	0	1	0	1	**6**	44	0	0	50	110	**2**	3	0	115	253
07:45	4	28	**60**	0	**92**	**1**	0	2	0	3	4	**56**	**2**	0	**62**	98	0	**5**	0	103	**260**
08:00	2	23	33	0	58	0	0	**7**	0	**7**	4	42	0	0	46	95	0	3	0	98	209
Total Volume	15	100	186	0	301	1	1	12	0	14	16	192	2	0	210	437	2	13	0	452	977
% App. Total	5	33.2	61.8	0		7.1	7.1	85.7	0		7.6	91.4	1	0		96.7	0.4	2.9	0		
PHF	.750	.833	.775	.000	.818	.250	.250	.429	.000	.500	.667	.857	.250	.000	.847	.815	.250	.650	.000	.831	.939

Peak Hour Analysis From 07:00 to 08:45 - Peak 1 of 1
Peak Hour for Each Approach Begins at:

	07:45					08:00					07:15					07:15				
+0 mins.	**4**	28	60	0	92	0	0	**7**	0	**7**	2	50	0	0	52	**134**	0	2	0	**136**
+15 mins.	2	23	33	0	58	0	0	3	0	3	**6**	44	0	0	50	110	**2**	3	0	115
+30 mins.	2	16	50	0	68	0	0	1	0	1	4	**56**	**2**	0	**62**	98	0	**5**	0	103
+45 mins.	1	**35**	**63**	0	**99**	0	**2**	4	0	6	4	42	0	0	46	95	0	3	0	98
Total Volume	9	102	206	0	317	0	2	15	0	17	16	192	2	0	210	437	2	13	0	452
% App. Total	2.8	32.2	65	0		0	11.8	88.2	0		7.6	91.4	1	0		96.7	0.4	2.9	0	
PHF	.563	.729	.817	.000	.801	.000	.250	.536	.000	.607	.667	.857	.250	.000	.847	.815	.250	.650	.000	.831

GRAM Traffic Counting, inc.

3751 FM 1105, Bldg. A
Georgetown, TX 78626
512-832-8650

File Name : Site 2 - Lohman Ford Rd & Boggy Ford Rd - AM
Site Code : 2
Start Date : 11/15/2023
Page No : 4

Groups Printed- Heavy Vehicles

	Lohman Ford Rd Southbound					Shoreline Ranch Rd Westbound					Lohman Ford Rd Northbound					Boggy Ford Rd Eastbound					
Start Time	Left	Thru	Right	U-TURN	App. Total	Left	Thru	Right	U-TURN	App. Total	Left	Thru	Right	U-TURN	App. Total	Left	Thru	Right	U-TURN	App. Total	Int. Total
07:00	1	1	1	0	3	0	0	0	0	0	0	0	0	0	0	0	0	0	0	0	3
07:15	1	1	3	0	5	0	0	0	0	0	0	0	0	0	0	0	0	0	0	0	5
07:30	0	0	1	0	1	0	0	0	0	0	0	1	0	0	1	0	1	0	0	1	3
07:45	0	1	0	0	1	0	0	0	0	0	0	0	0	0	0	2	0	0	0	2	3
Total	2	3	5	0	10	0	0	0	0	0	0	1	0	0	1	2	1	0	0	3	14
08:00	0	1	1	0	2	0	0	0	0	0	0	1	0	0	1	0	0	0	0	0	3
08:15	0	0	3	0	3	0	0	0	0	0	1	1	0	0	2	3	0	0	0	3	8
08:30	0	1	2	0	3	0	0	0	0	0	0	0	0	0	0	2	0	0	0	2	5
08:45	1	0	0	0	1	0	0	0	0	0	0	1	0	0	1	1	0	0	0	1	3
Total	1	2	6	0	9	0	0	0	0	0	1	3	0	0	4	6	0	0	0	6	19
Grand Total	3	5	11	0	19	0	0	0	0	0	1	4	0	0	5	8	1	0	0	9	33
Apprch %	15.8	26.3	57.9	0		0	0	0	0		20	80	0	0		88.9	11.1	0	0		
Total %	9.1	15.2	33.3	0	57.6	0	0	0	0	0	3	12.1	0	0	15.2	24.2	3	0	0	27.3	

	Lohman Ford Rd Southbound					Shoreline Ranch Rd Westbound					Lohman Ford Rd Northbound					Boggy Ford Rd Eastbound					
Start Time	Left	Thru	Right	U-TURN	App. Total	Left	Thru	Right	U-TURN	App. Total	Left	Thru	Right	U-TURN	App. Total	Left	Thru	Right	U-TURN	App. Total	Int. Total
Peak Hour Analysis From 07:00 to 08:45 - Peak 1 of 1																					
Peak Hour for Entire Intersection Begins at 07:45																					
07:45	0	**1**	0	0	1	0	0	0	0	0	0	0	0	0	0	2	0	0	0	2	3
08:00	0	1	1	0	2	0	0	0	0	0	0	**1**	0	0	1	0	0	0	0	0	3
08:15	0	0	**3**	0	**3**	0	0	0	0	0	**1**	1	0	0	**2**	**3**	0	0	0	**3**	**8**
08:30	0	1	2	0	3	0	0	0	0	0	0	0	0	0	0	2	0	0	0	2	5
Total Volume	0	3	6	0	9	0	0	0	0	0	1	2	0	0	3	7	0	0	0	7	19
% App. Total	0	33.3	66.7	0		0	0	0	0		33.3	66.7	0	0		100	0	0	0		
PHF	.000	.750	.500	.000	.750	.000	.000	.000	.000	.000	.250	.500	.000	.000	.375	.583	.000	.000	.000	.583	.594

Peak Hour Analysis From 07:00 to 08:45 - Peak 1 of 1
Peak Hour for Each Approach Begins at:

	07:00					07:00					07:30					07:45				
+0 mins.	**1**	**1**	1	0	3	0	0	0	0	0	0	**1**	0	0	1	2	0	0	0	2
+15 mins.	1	1	**3**	0	**5**	0	0	0	0	0	0	0	0	0	0	0	0	0	0	0
+30 mins.	0	0	1	0	1	0	0	0	0	0	0	1	0	0	1	**3**	0	0	0	**3**
+45 mins.	0	1	0	0	1	0	0	0	0	0	**1**	1	0	0	**2**	2	0	0	0	2
Total Volume	2	3	5	0	10	0	0	0	0	0	1	3	0	0	4	7	0	0	0	7
% App. Total	20	30	50	0		0	0	0	0		25	75	0	0		100	0	0	0	
PHF	.500	.750	.417	.000	.500	.000	.000	.000	.000	.000	.250	.750	.000	.000	.500	.583	.000	.000	.000	.583

GRAM Traffic Counting, inc.

3751 FM 1105, Bldg. A
Georgetown, TX 78626
512-832-8650

File Name : Site 2 - Lohman Ford Rd & Boggy Ford Rd - AM
Site Code : 2
Start Date : 11/15/2023
Page No : 5

Groups Printed- Pedestrians

	Lohman Ford Rd Southbound					Shoreline Ranch Rd Westbound					Lohman Ford Rd Northbound					Boggy Ford Rd Eastbound					
Start Time	Left	Thru	Right	U-TURN	App. Total	Left	Thru	Right	U-TURN	App. Total	Left	Thru	Right	U-TURN	App. Total	Left	Thru	Right	U-TURN	App. Total	Int. Total
07:00	0	0	0	0	0	0	0	0	0	0	0	0	0	0	0	0	0	0	0	0	0
07:15	0	0	0	0	0	0	0	0	0	0	0	0	0	0	0	0	0	0	0	0	0
07:30	0	0	0	0	0	0	0	0	0	0	0	0	0	0	0	0	0	0	0	0	0
07:45	0	0	0	0	0	0	0	0	0	0	0	0	0	0	0	0	0	0	0	0	0
Total	0	0	0	0	0	0	0	0	0	0	0	0	0	0	0	0	0	0	0	0	0
08:00	0	0	0	0	0	0	0	0	0	0	0	0	0	0	0	0	0	0	0	0	0
08:15	0	0	0	0	0	0	0	0	0	0	0	0	0	0	0	0	0	0	0	0	0
08:30	0	0	0	0	0	0	0	0	0	0	0	0	0	0	0	0	0	0	0	0	0
08:45	0	0	0	0	0	0	0	0	0	0	0	0	0	0	0	0	0	0	0	0	0
Total	0	0	0	0	0	0	0	0	0	0	0	0	0	0	0	0	0	0	0	0	0
Grand Total	0	0	0	0	0	0	0	0	0	0	0	0	0	0	0	0	0	0	0	0	0
Apprch %	0	0	0	0		0	0	0	0		0	0	0	0		0	0	0	0		
Total %																					

	Lohman Ford Rd Southbound					Shoreline Ranch Rd Westbound					Lohman Ford Rd Northbound					Boggy Ford Rd Eastbound					
Start Time	Left	Thru	Right	U-TURN	App. Total	Left	Thru	Right	U-TURN	App. Total	Left	Thru	Right	U-TURN	App. Total	Left	Thru	Right	U-TURN	App. Total	Int. Total
Peak Hour Analysis From 07:00 to 08:45 - Peak 1 of 1																					
Peak Hour for Entire Intersection Begins at 07:00																					
07:00	0	0	0	0	0	0	0	0	0	0	0	0	0	0	0	0	0	0	0	0	0
07:15	0	0	0	0	0	0	0	0	0	0	0	0	0	0	0	0	0	0	0	0	0
07:30	0	0	0	0	0	0	0	0	0	0	0	0	0	0	0	0	0	0	0	0	0
07:45	0	0	0	0	0	0	0	0	0	0	0	0	0	0	0	0	0	0	0	0	0
Total Volume	0	0	0	0	0	0	0	0	0	0	0	0	0	0	0	0	0	0	0	0	0
% App. Total	0	0	0	0		0	0	0	0		0	0	0	0		0	0	0	0		
PHF	.000	.000	.000	.000	.000	.000	.000	.000	.000	.000	.000	.000	.000	.000	.000	.000	.000	.000	.000	.000	.000

Peak Hour Analysis From 07:00 to 08:45 - Peak 1 of 1
Peak Hour for Each Approach Begins at:

	07:00					07:00					07:00					07:00				
+0 mins.	0	0	0	0	0	0	0	0	0	0	0	0	0	0	0	0	0	0	0	0
+15 mins.	0	0	0	0	0	0	0	0	0	0	0	0	0	0	0	0	0	0	0	0
+30 mins.	0	0	0	0	0	0	0	0	0	0	0	0	0	0	0	0	0	0	0	0
+45 mins.	0	0	0	0	0	0	0	0	0	0	0	0	0	0	0	0	0	0	0	0
Total Volume	0	0	0	0	0	0	0	0	0	0	0	0	0	0	0	0	0	0	0	0
% App. Total	0	0	0	0		0	0	0	0		0	0	0	0		0	0	0	0	
PHF	.000	.000	.000	.000	.000	.000	.000	.000	.000	.000	.000	.000	.000	.000	.000	.000	.000	.000	.000	.000

GRAM Traffic Counting, inc.

3751 FM 1105, Bldg. A
Georgetown, TX 78626
512-832-8650

File Name : Site 2 - Lohman Ford Rd & Boggy Ford Rd - PM
Site Code : 2
Start Date : 11/15/2023
Page No : 1

Groups Printed- Vehicles - Heavy Vehicles

	Lohman Ford Rd Southbound					Shoreline Ranch Rd Westbound					Lohman Ford Rd Northbound					Boggy Ford Rd Eastbound					
Start Time	Left	Thru	Right	U-TURN	App. Total	Left	Thru	Right	U-TURN	App. Total	Left	Thru	Right	U-TURN	App. Total	Left	Thru	Right	U-TURN	App. Total	Int. Total
14:00	5	27	69	0	101	0	0	0	0	0	0	24	0	0	24	66	1	4	0	71	196
14:15	1	31	70	0	102	0	0	4	0	4	8	25	1	0	34	46	0	2	0	48	188
14:30	4	38	65	0	107	0	0	3	0	3	0	31	0	0	31	44	1	1	0	46	187
14:45	3	25	59	0	87	0	2	4	0	6	0	21	0	0	21	58	1	7	0	66	180
Total	13	121	263	0	397	0	2	11	0	13	8	101	1	0	110	214	3	14	0	231	751
15:00	4	34	65	0	103	1	0	6	0	7	2	35	1	0	38	48	0	6	0	54	202
15:15	1	42	106	0	149	0	1	3	0	4	4	38	0	0	42	61	3	10	0	74	269
15:30	4	42	112	0	158	0	1	1	0	2	5	28	0	0	33	40	0	4	0	44	237
15:45	0	43	83	0	126	1	2	3	0	6	5	30	0	0	35	70	0	5	0	75	242
Total	9	161	366	0	536	2	4	13	0	19	16	131	1	0	148	219	3	25	0	247	950
16:00	3	44	85	0	132	0	3	2	0	5	5	41	0	0	46	103	0	5	0	108	291
16:15	5	43	131	0	179	0	1	9	0	10	4	28	0	0	32	75	0	3	0	78	299
16:30	3	54	135	0	192	0	1	4	0	5	6	42	1	0	49	56	2	7	0	65	311
16:45	3	43	100	0	146	0	0	4	0	4	7	27	1	0	35	57	1	7	0	65	250
Total	14	184	451	0	649	0	5	19	0	24	22	138	2	0	162	291	3	22	0	316	1151
17:00	3	41	96	0	140	0	2	6	0	8	6	37	0	0	43	60	0	6	0	66	257
17:15	1	61	106	0	168	0	2	1	0	3	9	24	0	0	33	74	0	8	0	82	286
17:30	3	49	88	0	140	0	0	3	0	3	8	48	0	0	56	51	0	6	0	57	256
17:45	2	48	96	0	146	0	1	4	0	5	5	30	1	0	36	64	0	17	0	81	268
Total	9	199	386	0	594	0	5	14	0	19	28	139	1	0	168	249	0	37	0	286	1067
18:00	0	47	104	0	151	0	0	9	0	9	7	25	0	0	32	58	1	11	0	70	262
18:15	2	34	76	0	112	0	0	4	0	4	6	22	0	0	28	46	0	9	0	55	199
18:30	3	31	117	0	151	0	0	2	0	2	5	17	1	0	23	37	1	5	0	43	219
18:45	4	29	83	0	116	0	0	0	0	0	2	15	0	0	17	28	0	4	0	32	165
Total	9	141	380	0	530	0	0	15	0	15	20	79	1	0	100	169	2	29	0	200	845
Grand Total	54	806	1846	0	2706	2	16	72	0	90	94	588	6	0	688	1142	11	127	0	1280	4764
Apprch %	2	29.8	68.2	0		2.2	17.8	80	0		13.7	85.5	0.9	0		89.2	0.9	9.9	0		
Total %	1.1	16.9	38.7	0	56.8	0	0.3	1.5	0	1.9	2	12.3	0.1	0	14.4	24	0.2	2.7	0	26.9	
Vehicles	52	799	1830	0	2681	2	15	70	0	87	87	570	6	0	663	1125	11	121	0	1257	4688
% Vehicles	96.3	99.1	99.1	0	99.1	100	93.8	97.2	0	96.7	92.6	96.9	100	0	96.4	98.5	100	95.3	0	98.2	98.4
Heavy Vehicles	2	7	16	0	25	0	1	2	0	3	7	18	0	0	25	17	0	6	0	23	76
% Heavy Vehicles	3.7	0.9	0.9	0	0.9	0	6.2	2.8	0	3.3	7.4	3.1	0	0	3.6	1.5	0	4.7	0	1.8	1.6

GRAM Traffic Counting, inc.

3751 FM 1105, Bldg. A
Georgetown, TX 78626
512-832-8650

File Name : Site 2 - Lohman Ford Rd & Boggy Ford Rd - PM
Site Code : 2
Start Date : 11/15/2023
Page No : 2

	Lohman Ford Rd Southbound					Shoreline Ranch Rd Westbound					Lohman Ford Rd Northbound					Boggy Ford Rd Eastbound					
Start Time	Left	Thru	Right	U-TURN	App. Total	Left	Thru	Right	U-TURN	App. Total	Left	Thru	Right	U-TURN	App. Total	Left	Thru	Right	U-TURN	App. Total	Int. Total
Peak Hour Analysis From 14:00 to 18:45 - Peak 1 of 1																					
Peak Hour for Entire Intersection Begins at 16:00																					
16:00	3	44	85	0	132	0	**3**	2	0	5	5	41	0	0	46	**103**	0	5	0	**108**	291
16:15	**5**	43	131	0	179	0	1	**9**	0	**10**	4	28	0	0	32	75	0	3	0	78	299
16:30	3	**54**	**135**	0	**192**	0	1	4	0	5	6	**42**	**1**	0	**49**	56	**2**	**7**	0	65	**311**
16:45	3	43	100	0	146	0	0	4	0	4	**7**	27	1	0	35	57	1	7	0	65	250
Total Volume	14	184	451	0	649	0	5	19	0	24	22	138	2	0	162	291	3	22	0	316	1151
% App. Total	2.2	28.4	69.5	0		0	20.8	79.2	0		13.6	85.2	1.2	0		92.1	0.9	7	0		
PHF	.700	.852	.835	.000	.845	.000	.417	.528	.000	.600	.786	.821	.500	.000	.827	.706	.375	.786	.000	.731	.925
Vehicles	13	182	447	0	642	0	5	18	0	23	20	134	2	0	156	284	3	21	0	308	1129
% Vehicles	92.9	98.9	99.1	0	98.9	0	100	94.7	0	95.8	90.9	97.1	100	0	96.3	97.6	100	95.5	0	97.5	98.1
Heavy Vehicles	1	2	4	0	7	0	0	1	0	1	2	4	0	0	6	7	0	1	0	8	22
% Heavy Vehicles	7.1	1.1	0.9	0	1.1	0	0	5.3	0	4.2	9.1	2.9	0	0	3.7	2.4	0	4.5	0	2.5	1.9

Peak Hour Analysis From 14:00 to 18:45 - Peak 1 of 1
Peak Hour for Each Approach Begins at:

	16:15					16:15					17:00					15:45				
+0 mins.	**5**	43	131	0	179	0	1	**9**	0	**10**	6	37	0	0	43	70	0	5	0	75
+15 mins.	3	**54**	**135**	0	**192**	0	1	4	0	5	**9**	24	0	0	33	**103**	0	5	0	**108**
+30 mins.	3	43	100	0	146	0	0	4	0	4	8	**48**	0	0	**56**	75	0	3	0	78
+45 mins.	3	41	96	0	140	0	**2**	6	0	8	5	30	**1**	0	36	56	**2**	**7**	0	65
Total Volume	14	181	462	0	657	0	4	23	0	27	28	139	1	0	168	304	2	20	0	326
% App. Total	2.1	27.5	70.3	0		0	14.8	85.2	0		16.7	82.7	0.6	0		93.3	0.6	6.1	0	
PHF	.700	.838	.856	.000	.855	.000	.500	.639	.000	.675	.778	.724	.250	.000	.750	.738	.250	.714	.000	.755
Vehicles	14	179	459	0	652	0	4	22	0	26	27	136	1	0	164	293	2	18	0	313
% Vehicles	100	98.9	99.4	0	99.2	0	100	95.7	0	96.3	96.4	97.8	100	0	97.6	96.4	100	90	0	96
Heavy Vehicles	0	2	3	0	5	0	0	1	0	1	1	3	0	0	4	11	0	2	0	13
% Heavy Vehicles	0	1.1	0.6	0	0.8	0	0	4.3	0	3.7	3.6	2.2	0	0	2.4	3.6	0	10	0	4

GRAM Traffic Counting, inc.

3751 FM 1105, Bldg. A
Georgetown, TX 78626
512-832-8650

File Name : Site 2 - Lohman Ford Rd & Boggy Ford Rd - PM
Site Code : 2
Start Date : 11/15/2023
Page No : 3

Groups Printed- Vehicles

	Lohman Ford Rd Southbound					Shoreline Ranch Rd Westbound					Lohman Ford Rd Northbound					Boggy Ford Rd Eastbound					
Start Time	Left	Thru	Right	U-TURN	App. Total	Left	Thru	Right	U-TURN	App. Total	Left	Thru	Right	U-TURN	App. Total	Left	Thru	Right	U-TURN	App. Total	Int. Total
14:00	4	26	69	0	99	0	0	0	0	0	0	23	0	0	23	66	1	4	0	71	193
14:15	1	31	68	0	100	0	0	4	0	4	8	25	1	0	34	46	0	1	0	47	185
14:30	4	38	65	0	107	0	0	3	0	3	0	29	0	0	29	44	1	1	0	46	185
14:45	3	24	57	0	84	0	2	3	0	5	0	19	0	0	19	58	1	6	0	65	173
Total	12	119	259	0	390	0	2	10	0	12	8	96	1	0	105	214	3	12	0	229	736
15:00	4	34	65	0	103	1	0	6	0	7	1	35	1	0	37	48	0	6	0	54	201
15:15	1	42	105	0	148	0	1	3	0	4	3	37	0	0	40	59	3	9	0	71	263
15:30	4	41	109	0	154	0	1	1	0	2	3	28	0	0	31	40	0	4	0	44	231
15:45	0	42	83	0	125	1	1	3	0	5	5	29	0	0	34	65	0	4	0	69	233
Total	9	159	362	0	530	2	3	13	0	18	12	129	1	0	142	212	3	23	0	238	928
16:00	2	44	83	0	129	0	3	2	0	5	4	39	0	0	43	99	0	5	0	104	281
16:15	5	42	131	0	178	0	1	9	0	10	3	27	0	0	30	74	0	3	0	77	295
16:30	3	54	135	0	192	0	1	4	0	5	6	42	1	0	49	55	2	6	0	63	309
16:45	3	42	98	0	143	0	0	3	0	3	7	26	1	0	34	56	1	7	0	64	244
Total	13	182	447	0	642	0	5	18	0	23	20	134	2	0	156	284	3	21	0	308	1129
17:00	3	41	95	0	139	0	2	6	0	8	6	36	0	0	42	60	0	6	0	66	255
17:15	1	60	106	0	167	0	2	1	0	3	9	24	0	0	33	73	0	8	0	81	284
17:30	3	49	86	0	138	0	0	3	0	3	7	47	0	0	54	51	0	6	0	57	252
17:45	2	48	96	0	146	0	1	4	0	5	5	29	1	0	35	63	0	17	0	80	266
Total	9	198	383	0	590	0	5	14	0	19	27	136	1	0	164	247	0	37	0	284	1057
18:00	0	47	103	0	150	0	0	9	0	9	7	22	0	0	29	58	1	11	0	70	258
18:15	2	34	76	0	112	0	0	4	0	4	6	22	0	0	28	45	0	8	0	53	197
18:30	3	31	117	0	151	0	0	2	0	2	5	16	1	0	22	37	1	5	0	43	218
18:45	4	29	83	0	116	0	0	0	0	0	2	15	0	0	17	28	0	4	0	32	165
Total	9	141	379	0	529	0	0	15	0	15	20	75	1	0	96	168	2	28	0	198	838
Grand Total	52	799	1830	0	2681	2	15	70	0	87	87	570	6	0	663	1125	11	121	0	1257	4688
Apprch %	1.9	29.8	68.3	0		2.3	17.2	80.5	0		13.1	86	0.9	0		89.5	0.9	9.6	0		
Total %	1.1	17	39	0	57.2	0	0.3	1.5	0	1.9	1.9	12.2	0.1	0	14.1	24	0.2	2.6	0	26.8	

	Lohman Ford Rd Southbound					Shoreline Ranch Rd Westbound					Lohman Ford Rd Northbound					Boggy Ford Rd Eastbound					
Start Time	Left	Thru	Right	U-TURN	App. Total	Left	Thru	Right	U-TURN	App. Total	Left	Thru	Right	U-TURN	App. Total	Left	Thru	Right	U-TURN	App. Total	Int. Total
Peak Hour Analysis From 14:00 to 18:45 - Peak 1 of 1																					
Peak Hour for Entire Intersection Begins at 16:00																					
16:00	2	44	83	0	129	0	**3**	2	0	5	4	39	0	0	43	**99**	0	5	0	**104**	281
16:15	**5**	42	131	0	178	0	1	**9**	0	**10**	3	27	0	0	30	74	0	3	0	77	295
16:30	3	**54**	**135**	0	**192**	0	1	4	0	5	6	**42**	**1**	0	**49**	55	**2**	6	0	63	**309**
16:45	3	42	98	0	143	0	0	3	0	3	**7**	26	1	0	34	56	1	**7**	0	64	244
Total Volume	13	182	447	0	642	0	5	18	0	23	20	134	2	0	156	284	3	21	0	308	1129
% App. Total	2	28.3	69.6	0		0	21.7	78.3	0		12.8	85.9	1.3	0		92.2	1	6.8	0		
PHF	.650	.843	.828	.000	.836	.000	.417	.500	.000	.575	.714	.798	.500	.000	.796	.717	.375	.750	.000	.740	.913

GRAM Traffic Counting, inc.

3751 FM 1105, Bldg. A
Georgetown, TX 78626
512-832-8650

File Name : Site 2 - Lohman Ford Rd & Boggy Ford Rd - PM
Site Code : 2
Start Date : 11/15/2023
Page No : 4

	Lohman Ford Rd Southbound					Shoreline Ranch Rd Westbound					Lohman Ford Rd Northbound					Boggy Ford Rd Eastbound					
Start Time	Left	Thru	Right	U-TURN	App. Total	Left	Thru	Right	U-TURN	App. Total	Left	Thru	Right	U-TURN	App. Total	Left	Thru	Right	U-TURN	App. Total	Int. Total
Peak Hour Analysis From 14:00 to 18:45 - Peak 1 of 1																					
Peak Hour for Each Approach Begins at:																					
	16:15					16:15					17:00					15:45					
+0 mins.	**5**	42	131	0	178	0	1	**9**	0	**10**	6	36	0	0	42	65	0	4	0	69	
+15 mins.	3	**54**	**135**	0	**192**	0	1	4	0	5	**9**	24	0	0	33	**99**	0	5	0	**104**	
+30 mins.	3	42	98	0	143	0	0	3	0	3	7	**47**	0	0	**54**	74	0	3	0	77	
+45 mins.	3	41	95	0	139	0	**2**	6	0	8	5	29	**1**	0	35	55	**2**	**6**	0	63	
Total Volume	14	179	459	0	652	0	4	22	0	26	27	136	1	0	164	293	2	18	0	313	
% App. Total	2.1	27.5	70.4	0		0	15.4	84.6	0		16.5	82.9	0.6	0		93.6	0.6	5.8	0		
PHF	.700	.829	.850	.000	.849	.000	.500	.611	.000	.650	.750	.723	.250	.000	.759	.740	.250	.750	.000	.752	

GRAM Traffic Counting, inc.

3751 FM 1105, Bldg. A
Georgetown, TX 78626
512-832-8650

File Name : Site 2 - Lohman Ford Rd & Boggy Ford Rd - PM
Site Code : 2
Start Date : 11/15/2023
Page No : 5

Groups Printed- Heavy Vehicles

	Lohman Ford Rd Southbound					Shoreline Ranch Rd Westbound					Lohman Ford Rd Northbound					Boggy Ford Rd Eastbound					
Start Time	Left	Thru	Right	U-TURN	App. Total	Left	Thru	Right	U-TURN	App. Total	Left	Thru	Right	U-TURN	App. Total	Left	Thru	Right	U-TURN	App. Total	Int. Total
14:00	1	1	0	0	2	0	0	0	0	0	0	1	0	0	1	0	0	0	0	0	3
14:15	0	0	2	0	2	0	0	0	0	0	0	0	0	0	0	0	0	1	0	1	3
14:30	0	0	0	0	0	0	0	0	0	0	0	2	0	0	2	0	0	0	0	0	2
14:45	0	1	2	0	3	0	0	1	0	1	0	2	0	0	2	0	0	1	0	1	7
Total	1	2	4	0	7	0	0	1	0	1	0	5	0	0	5	0	0	2	0	2	15
15:00	0	0	0	0	0	0	0	0	0	0	1	0	0	0	1	0	0	0	0	0	1
15:15	0	0	1	0	1	0	0	0	0	0	1	1	0	0	2	2	0	1	0	3	6
15:30	0	1	3	0	4	0	0	0	0	0	2	0	0	0	2	0	0	0	0	0	6
15:45	0	1	0	0	1	0	1	0	0	1	0	1	0	0	1	5	0	1	0	6	9
Total	0	2	4	0	6	0	1	0	0	1	4	2	0	0	6	7	0	2	0	9	22
16:00	1	0	2	0	3	0	0	0	0	0	1	2	0	0	3	4	0	0	0	4	10
16:15	0	1	0	0	1	0	0	0	0	0	1	1	0	0	2	1	0	0	0	1	4
16:30	0	0	0	0	0	0	0	0	0	0	0	0	0	0	0	1	0	1	0	2	2
16:45	0	1	2	0	3	0	0	1	0	1	0	1	0	0	1	1	0	0	0	1	6
Total	1	2	4	0	7	0	0	1	0	1	2	4	0	0	6	7	0	1	0	8	22
17:00	0	0	1	0	1	0	0	0	0	0	0	1	0	0	1	0	0	0	0	0	2
17:15	0	1	0	0	1	0	0	0	0	0	0	0	0	0	0	1	0	0	0	1	2
17:30	0	0	2	0	2	0	0	0	0	0	1	1	0	0	2	0	0	0	0	0	4
17:45	0	0	0	0	0	0	0	0	0	0	0	1	0	0	1	1	0	0	0	1	2
Total	0	1	3	0	4	0	0	0	0	0	1	3	0	0	4	2	0	0	0	2	10
18:00	0	0	1	0	1	0	0	0	0	0	0	3	0	0	3	0	0	0	0	0	4
18:15	0	0	0	0	0	0	0	0	0	0	0	0	0	0	0	1	0	1	0	2	2
18:30	0	0	0	0	0	0	0	0	0	0	0	1	0	0	1	0	0	0	0	0	1
18:45	0	0	0	0	0	0	0	0	0	0	0	0	0	0	0	0	0	0	0	0	0
Total	0	0	1	0	1	0	0	0	0	0	0	4	0	0	4	1	0	1	0	2	7
Grand Total	2	7	16	0	25	0	1	2	0	3	7	18	0	0	25	17	0	6	0	23	76
Apprch %	8	28	64	0		0	33.3	66.7	0		28	72	0	0		73.9	0	26.1	0		
Total %	2.6	9.2	21.1	0	32.9	0	1.3	2.6	0	3.9	9.2	23.7	0	0	32.9	22.4	0	7.9	0	30.3	

	Lohman Ford Rd Southbound					Shoreline Ranch Rd Westbound					Lohman Ford Rd Northbound					Boggy Ford Rd Eastbound					
Start Time	Left	Thru	Right	U-TURN	App. Total	Left	Thru	Right	U-TURN	App. Total	Left	Thru	Right	U-TURN	App. Total	Left	Thru	Right	U-TURN	App. Total	Int. Total
Peak Hour Analysis From 14:00 to 18:45 - Peak 1 of 1																					
Peak Hour for Entire Intersection Begins at 15:15																					
15:15	0	0	1	0	1	0	0	0	0	0	1	1	0	0	2	2	0	**1**	0	3	6
15:30	0	**1**	**3**	0	**4**	0	0	0	0	0	**2**	0	0	0	2	0	0	0	0	0	6
15:45	0	1	0	0	1	0	**1**	0	0	**1**	0	1	0	0	1	**5**	0	1	0	**6**	9
16:00	**1**	0	2	0	3	0	0	0	0	0	1	**2**	0	0	**3**	4	0	0	0	4	**10**
Total Volume	1	2	6	0	9	0	1	0	0	1	4	4	0	0	8	11	0	2	0	13	31
% App. Total	11.1	22.2	66.7	0		0	100	0	0		50	50	0	0		84.6	0	15.4	0		
PHF	.250	.500	.500	.000	.563	.000	.250	.000	.000	.250	.500	.500	.000	.000	.667	.550	.000	.500	.000	.542	.775

GRAM Traffic Counting, inc.

3751 FM 1105, Bldg. A
Georgetown, TX 78626
512-832-8650

File Name : Site 2 - Lohman Ford Rd & Boggy Ford Rd - PM
Site Code : 2
Start Date : 11/15/2023
Page No : 6

	Lohman Ford Rd Southbound					Shoreline Ranch Rd Westbound					Lohman Ford Rd Northbound					Boggy Ford Rd Eastbound					
Start Time	Left	Thru	Right	U-TURN	App. Total	Left	Thru	Right	U-TURN	App. Total	Left	Thru	Right	U-TURN	App. Total	Left	Thru	Right	U-TURN	App. Total	Int. Total
Peak Hour Analysis From 14:00 to 18:45 - Peak 1 of 1																					
Peak Hour for Each Approach Begins at:																					
	15:15					14:00					15:15					15:15					
+0 mins.	0	0	1	0	1	0	0	0	0	0	1	1	0	0	2	2	0	**1**	0	3	
+15 mins.	0	**1**	**3**	0	**4**	0	0	0	0	0	**2**	0	0	0	2	0	0	0	0	0	
+30 mins.	0	1	0	0	1	0	0	0	0	0	0	1	0	0	1	**5**	0	1	0	**6**	
+45 mins.	**1**	0	2	0	3	0	0	**1**	0	**1**	1	**2**	0	0	**3**	4	0	0	0	4	
Total Volume	1	2	6	0	9	0	0	1	0	1	4	4	0	0	8	11	0	2	0	13	
% App. Total	11.1	22.2	66.7	0		0	0	100	0		50	50	0	0		84.6	0	15.4	0		
PHF	.250	.500	.500	.000	.563	.000	.000	.250	.000	.250	.500	.500	.000	.000	.667	.550	.000	.500	.000	.542	

GRAM Traffic Counting, inc.

3751 FM 1105, Bldg. A
Georgetown, TX 78626
512-832-8650

File Name : Site 2 - Lohman Ford Rd & Boggy Ford Rd - PM
Site Code : 2
Start Date : 11/15/2023
Page No : 7

Groups Printed- Pedestrians

	Lohman Ford Rd Southbound					Shoreline Ranch Rd Westbound					Lohman Ford Rd Northbound					Boggy Ford Rd Eastbound					
Start Time	Left	Thru	Right	U-TURN	App. Total	Left	Thru	Right	U-TURN	App. Total	Left	Thru	Right	U-TURN	App. Total	Left	Thru	Right	U-TURN	App. Total	Int. Total
14:00	0	0	0	0	0	0	0	0	0	0	0	0	0	0	0	0	0	0	0	0	0
14:15	0	0	0	0	0	0	0	0	0	0	0	0	0	0	0	0	0	0	0	0	0
14:30	0	0	0	0	0	0	0	0	0	0	0	0	0	0	0	0	0	0	0	0	0
14:45	0	0	0	0	0	0	0	0	0	0	0	0	0	0	0	0	0	0	0	0	0
Total	0	0	0	0	0	0	0	0	0	0	0	0	0	0	0	0	0	0	0	0	0
15:00	0	0	0	0	0	0	0	0	0	0	0	0	0	0	0	0	0	0	0	0	0
15:15	0	0	0	0	0	0	0	0	0	0	0	0	0	0	0	0	0	0	0	0	0
15:30	0	0	0	0	0	0	0	0	0	0	0	0	0	0	0	0	0	0	0	0	0
15:45	0	0	0	0	0	0	0	0	0	0	0	0	0	0	0	0	0	0	0	0	0
Total	0	0	0	0	0	0	0	0	0	0	0	0	0	0	0	0	0	0	0	0	0
16:00	0	0	0	0	0	0	0	0	0	0	0	0	0	0	0	0	0	0	0	0	0
16:15	0	0	0	0	0	0	0	0	0	0	0	0	0	0	0	0	0	0	0	0	0
16:30	0	0	0	0	0	0	0	0	0	0	0	0	0	0	0	0	0	0	0	0	0
16:45	0	0	0	0	0	0	0	0	0	0	0	0	0	0	0	0	0	0	0	0	0
Total	0	0	0	0	0	0	0	0	0	0	0	0	0	0	0	0	0	0	0	0	0
17:00	0	0	0	0	0	0	0	0	0	0	0	0	0	0	0	0	0	0	0	0	0
17:15	0	0	0	0	0	0	0	0	0	0	0	0	0	0	0	0	0	0	0	0	0
17:30	0	0	0	0	0	0	0	0	0	0	0	0	0	0	0	0	0	0	0	0	0
17:45	0	0	0	0	0	0	0	0	0	0	0	0	0	0	0	0	0	0	0	0	0
Total	0	0	0	0	0	0	0	0	0	0	0	0	0	0	0	0	0	0	0	0	0
18:00	0	0	0	0	0	0	0	0	0	0	0	0	0	0	0	0	0	0	0	0	0
18:15	0	0	0	0	0	0	0	0	0	0	0	0	0	0	0	0	0	0	0	0	0
18:30	0	0	0	0	0	0	0	0	0	0	0	0	0	0	0	0	0	0	0	0	0
18:45	0	0	0	0	0	0	0	0	0	0	0	0	0	0	0	0	0	0	0	0	0
Total	0	0	0	0	0	0	0	0	0	0	0	0	0	0	0	0	0	0	0	0	0
Grand Total	0	0	0	0	0	0	0	0	0	0	0	0	0	0	0	0	0	0	0	0	0
Apprch %	0	0	0	0		0	0	0	0		0	0	0	0		0	0	0	0		
Total %																					

	Lohman Ford Rd Southbound					Shoreline Ranch Rd Westbound					Lohman Ford Rd Northbound					Boggy Ford Rd Eastbound					
Start Time	Left	Thru	Right	U-TURN	App. Total	Left	Thru	Right	U-TURN	App. Total	Left	Thru	Right	U-TURN	App. Total	Left	Thru	Right	U-TURN	App. Total	Int. Total
Peak Hour Analysis From 14:00 to 18:45 - Peak 1 of 1																					
Peak Hour for Entire Intersection Begins at 14:00																					
14:00	0	0	0	0	0	0	0	0	0	0	0	0	0	0	0	0	0	0	0	0	0
14:15	0	0	0	0	0	0	0	0	0	0	0	0	0	0	0	0	0	0	0	0	0
14:30	0	0	0	0	0	0	0	0	0	0	0	0	0	0	0	0	0	0	0	0	0
14:45	0	0	0	0	0	0	0	0	0	0	0	0	0	0	0	0	0	0	0	0	0
Total Volume	0	0	0	0	0	0	0	0	0	0	0	0	0	0	0	0	0	0	0	0	0
% App. Total	0	0	0	0		0	0	0	0		0	0	0	0		0	0	0	0		
PHF	.000	.000	.000	.000	.000	.000	.000	.000	.000	.000	.000	.000	.000	.000	.000	.000	.000	.000	.000	.000	.000

GRAM Traffic Counting, inc.

3751 FM 1105, Bldg. A
Georgetown, TX 78626
512-832-8650

File Name : Site 2 - Lohman Ford Rd & Boggy Ford Rd - PM
Site Code : 2
Start Date : 11/15/2023
Page No : 8

	Lohman Ford Rd Southbound					Shoreline Ranch Rd Westbound					Lohman Ford Rd Northbound					Boggy Ford Rd Eastbound					
Start Time	Left	Thru	Right	U-TURN	App. Total	Left	Thru	Right	U-TURN	App. Total	Left	Thru	Right	U-TURN	App. Total	Left	Thru	Right	U-TURN	App. Total	Int. Total
Peak Hour Analysis From 14:00 to 18:45 - Peak 1 of 1																					
Peak Hour for Each Approach Begins at:																					
	14:00					14:00					14:00					14:00					
+0 mins.	0	0	0	0	0	0	0	0	0	0	0	0	0	0	0	0	0	0	0	0	
+15 mins.	0	0	0	0	0	0	0	0	0	0	0	0	0	0	0	0	0	0	0	0	
+30 mins.	0	0	0	0	0	0	0	0	0	0	0	0	0	0	0	0	0	0	0	0	
+45 mins.	0	0	0	0	0	0	0	0	0	0	0	0	0	0	0	0	0	0	0	0	
Total Volume	0	0	0	0	0	0	0	0	0	0	0	0	0	0	0	0	0	0	0	0	
% App. Total	0	0	0	0		0	0	0	0		0	0	0	0		0	0	0	0		
PHF	.000	.000	.000	.000	.000	.000	.000	.000	.000	.000	.000	.000	.000	.000	.000	.000	.000	.000	.000	.000	

GRAM Traffic Counting, inc.

3751 FM 1105, Bldg. A
Georgetown, TX 78626
512-832-8650

File Name : Site 3 - Boggy Ford Rd & National Dr - AM
Site Code : 3
Start Date : 11/15/2023
Page No : 1

Groups Printed- Vehicles - Heavy Vehicles

	National Dr Southbound					Boggy Ford Rd Westbound					National Dr Northbound					Boggy Ford Rd Eastbound					
Start Time	Left	Thru	Right	U-TURN	App. Total	Left	Thru	Right	U-TURN	App. Total	Left	Thru	Right	U-TURN	App. Total	Left	Thru	Right	U-TURN	App. Total	Int. Total
07:00	10	0	1	0	11	0	13	3	0	16	0	2	1	0	3	3	73	0	0	76	106
07:15	10	1	3	0	14	0	21	3	0	24	0	4	0	0	4	3	85	0	0	88	130
07:30	9	3	1	0	13	0	40	9	0	49	0	2	1	0	3	5	73	0	0	78	143
07:45	14	1	3	0	18	0	43	14	0	57	0	5	0	0	5	3	66	0	0	69	149
Total	43	5	8	0	56	0	117	29	0	146	0	13	2	0	15	14	297	0	0	311	528
08:00	9	0	1	0	10	0	18	7	0	25	1	1	0	0	2	3	76	0	0	79	116
08:15	12	6	1	0	19	0	43	4	0	47	0	3	0	0	3	5	76	0	0	81	150
08:30	8	3	0	0	11	1	48	4	0	53	1	2	0	0	3	1	64	0	0	65	132
08:45	6	0	5	0	11	0	29	3	0	32	1	1	0	0	2	2	56	0	0	58	103
Total	35	9	7	0	51	1	138	18	0	157	3	7	0	0	10	11	272	0	0	283	501
Grand Total	78	14	15	0	107	1	255	47	0	303	3	20	2	0	25	25	569	0	0	594	1029
Apprch %	72.9	13.1	14	0		0.3	84.2	15.5	0		12	80	8	0		4.2	95.8	0	0		
Total %	7.6	1.4	1.5	0	10.4	0.1	24.8	4.6	0	29.4	0.3	1.9	0.2	0	2.4	2.4	55.3	0	0	57.7	
Vehicles	78	14	15	0	107	1	252	45	0	298	3	19	2	0	24	23	567	0	0	590	1019
% Vehicles	100	100	100	0	100	100	98.8	95.7	0	98.3	100	95	100	0	96	92	99.6	0	0	99.3	99
Heavy Vehicles	0	0	0	0	0	0	3	2	0	5	0	1	0	0	1	2	2	0	0	4	10
% Heavy Vehicles	0	0	0	0	0	0	1.2	4.3	0	1.7	0	5	0	0	4	8	0.4	0	0	0.7	1

	National Dr Southbound					Boggy Ford Rd Westbound					National Dr Northbound					Boggy Ford Rd Eastbound					
Start Time	Left	Thru	Right	U-TURN	App. Total	Left	Thru	Right	U-TURN	App. Total	Left	Thru	Right	U-TURN	App. Total	Left	Thru	Right	U-TURN	App. Total	Int. Total
Peak Hour Analysis From 07:00 to 08:45 - Peak 1 of 1																					
Peak Hour for Entire Intersection Begins at 07:30																					
07:30	9	3	1	0	13	0	40	9	0	49	0	2	**1**	0	3	**5**	73	0	0	78	143
07:45	**14**	1	**3**	0	18	0	**43**	**14**	0	**57**	0	**5**	0	0	**5**	3	66	0	0	69	149
08:00	9	0	1	0	10	0	18	7	0	25	**1**	1	0	0	2	3	**76**	0	0	79	116
08:15	12	**6**	1	0	**19**	0	43	4	0	47	0	3	0	0	3	5	76	0	0	**81**	**150**
Total Volume	44	10	6	0	60	0	144	34	0	178	1	11	1	0	13	16	291	0	0	307	558
% App. Total	73.3	16.7	10	0		0	80.9	19.1	0		7.7	84.6	7.7	0		5.2	94.8	0	0		
PHF	.786	.417	.500	.000	.789	.000	.837	.607	.000	.781	.250	.550	.250	.000	.650	.800	.957	.000	.000	.948	.930
Vehicles	44	10	6	0	60	0	143	32	0	175	1	11	1	0	13	15	290	0	0	305	553
% Vehicles	100	100	100	0	100	0	99.3	94.1	0	98.3	100	100	100	0	100	93.8	99.7	0	0	99.3	99.1
Heavy Vehicles	0	0	0	0	0	0	1	2	0	3	0	0	0	0	0	1	1	0	0	2	5
% Heavy Vehicles	0	0	0	0	0	0	0.7	5.9	0	1.7	0	0	0	0	0	6.3	0.3	0	0	0.7	0.9

GRAM Traffic Counting, inc.

3751 FM 1105, Bldg. A
Georgetown, TX 78626
512-832-8650

File Name : Site 3 - Boggy Ford Rd & National Dr - AM
Site Code : 3
Start Date : 11/15/2023
Page No : 2

	National Dr Southbound					Boggy Ford Rd Westbound					National Dr Northbound					Boggy Ford Rd Eastbound					
Start Time	Left	Thru	Right	U-TURN	App. Total	Left	Thru	Right	U-TURN	App. Total	Left	Thru	Right	U-TURN	App. Total	Left	Thru	Right	U-TURN	App. Total	Int. Total
Peak Hour Analysis From 07:00 to 08:45 - Peak 1 of 1																					
Peak Hour for Each Approach Begins at:																					
	07:30					07:45					07:00					07:15					
+0 mins.	9	3	1	0	13	0	43	**14**	0	**57**	0	2	**1**	0	3	3	**85**	0	0	**88**	
+15 mins.	**14**	1	**3**	0	18	0	18	7	0	25	0	4	0	0	4	**5**	73	0	0	78	
+30 mins.	9	0	1	0	10	0	43	4	0	47	0	2	1	0	3	3	66	0	0	69	
+45 mins.	12	**6**	1	0	**19**	**1**	**48**	4	0	53	0	**5**	0	0	**5**	3	76	0	0	79	
Total Volume	44	10	6	0	60	1	152	29	0	182	0	13	2	0	15	14	300	0	0	314	
% App. Total	73.3	16.7	10	0		0.5	83.5	15.9	0		0	86.7	13.3	0		4.5	95.5	0	0		
PHF	.786	.417	.500	.000	.789	.250	.792	.518	.000	.798	.000	.650	.500	.000	.750	.700	.882	.000	.000	.892	
Vehicles	44	10	6	0	60	1	151	29	0	181	0	13	2	0	15	12	300	0	0	312	
% Vehicles	100	100	100	0	100	100	99.3	100	0	99.5	0	100	100	0	100	85.7	100	0	0	99.4	
Heavy Vehicles	0	0	0	0	0	0	1	0	0	1	0	0	0	0	0	2	0	0	0	2	
% Heavy Vehicles	0	0	0	0	0	0	0.7	0	0	0.5	0	0	0	0	0	14.3	0	0	0	0.6	

GRAM Traffic Counting, inc.

3751 FM 1105, Bldg. A
Georgetown, TX 78626
512-832-8650

File Name : Site 3 - Boggy Ford Rd & National Dr - AM
Site Code : 3
Start Date : 11/15/2023
Page No : 3

Groups Printed- Vehicles

	National Dr Southbound					Boggy Ford Rd Westbound					National Dr Northbound					Boggy Ford Rd Eastbound					
Start Time	Left	Thru	Right	U-TURN	App. Total	Left	Thru	Right	U-TURN	App. Total	Left	Thru	Right	U-TURN	App. Total	Left	Thru	Right	U-TURN	App. Total	Int. Total
07:00	10	0	1	0	11	0	13	3	0	16	0	2	1	0	3	3	73	0	0	76	106
07:15	10	1	3	0	14	0	20	3	0	23	0	4	0	0	4	2	85	0	0	87	128
07:30	9	3	1	0	13	0	39	7	0	46	0	2	1	0	3	4	73	0	0	77	139
07:45	14	1	3	0	18	0	43	14	0	57	0	5	0	0	5	3	66	0	0	69	149
Total	43	5	8	0	56	0	115	27	0	142	0	13	2	0	15	12	297	0	0	309	522
08:00	9	0	1	0	10	0	18	7	0	25	1	1	0	0	2	3	76	0	0	79	116
08:15	12	6	1	0	19	0	43	4	0	47	0	3	0	0	3	5	75	0	0	80	149
08:30	8	3	0	0	11	1	47	4	0	52	1	1	0	0	2	1	63	0	0	64	129
08:45	6	0	5	0	11	0	29	3	0	32	1	1	0	0	2	2	56	0	0	58	103
Total	35	9	7	0	51	1	137	18	0	156	3	6	0	0	9	11	270	0	0	281	497
Grand Total	78	14	15	0	107	1	252	45	0	298	3	19	2	0	24	23	567	0	0	590	1019
Apprch %	72.9	13.1	14	0		0.3	84.6	15.1	0		12.5	79.2	8.3	0		3.9	96.1	0	0		
Total %	7.7	1.4	1.5	0	10.5	0.1	24.7	4.4	0	29.2	0.3	1.9	0.2	0	2.4	2.3	55.6	0	0	57.9	

	National Dr Southbound					Boggy Ford Rd Westbound					National Dr Northbound					Boggy Ford Rd Eastbound					
Start Time	Left	Thru	Right	U-TURN	App. Total	Left	Thru	Right	U-TURN	App. Total	Left	Thru	Right	U-TURN	App. Total	Left	Thru	Right	U-TURN	App. Total	Int. Total
Peak Hour Analysis From 07:00 to 08:45 - Peak 1 of 1																					
Peak Hour for Entire Intersection Begins at 07:30																					
07:30	9	3	1	0	13	0	39	7	0	46	0	2	**1**	0	3	4	73	0	0	77	139
07:45	**14**	1	**3**	0	18	0	**43**	**14**	0	**57**	0	**5**	0	0	**5**	3	66	0	0	69	**149**
08:00	9	0	1	0	10	0	18	7	0	25	**1**	1	0	0	2	3	**76**	0	0	79	116
08:15	12	**6**	1	0	**19**	0	43	4	0	47	0	3	0	0	3	**5**	75	0	0	**80**	149
Total Volume	44	10	6	0	60	0	143	32	0	175	1	11	1	0	13	15	290	0	0	305	553
% App. Total	73.3	16.7	10	0		0	81.7	18.3	0		7.7	84.6	7.7	0		4.9	95.1	0	0		
PHF	.786	.417	.500	.000	.789	.000	.831	.571	.000	.768	.250	.550	.250	.000	.650	.750	.954	.000	.000	.953	.928

Peak Hour Analysis From 07:00 to 08:45 - Peak 1 of 1
Peak Hour for Each Approach Begins at:

	07:30					07:45					07:00					07:15				
+0 mins.	9	3	1	0	13	0	43	**14**	0	**57**	0	2	**1**	0	3	2	**85**	0	0	**87**
+15 mins.	**14**	1	**3**	0	18	0	18	7	0	25	0	4	0	0	4	**4**	73	0	0	77
+30 mins.	9	0	1	0	10	0	43	4	0	47	0	2	1	0	3	3	66	0	0	69
+45 mins.	12	**6**	1	0	**19**	**1**	**47**	4	0	52	0	**5**	0	0	**5**	3	76	0	0	79
Total Volume	44	10	6	0	60	1	151	29	0	181	0	13	2	0	15	12	300	0	0	312
% App. Total	73.3	16.7	10	0		0.6	83.4	16	0		0	86.7	13.3	0		3.8	96.2	0	0	
PHF	.786	.417	.500	.000	.789	.250	.803	.518	.000	.794	.000	.650	.500	.000	.750	.750	.882	.000	.000	.897

GRAM Traffic Counting, inc.

3751 FM 1105, Bldg. A
Georgetown, TX 78626
512-832-8650

File Name : Site 3 - Boggy Ford Rd & National Dr - AM
Site Code : 3
Start Date : 11/15/2023
Page No : 4

Groups Printed- Heavy Vehicles

	National Dr Southbound					Boggy Ford Rd Westbound					National Dr Northbound					Boggy Ford Rd Eastbound					
Start Time	Left	Thru	Right	U-TURN	App. Total	Left	Thru	Right	U-TURN	App. Total	Left	Thru	Right	U-TURN	App. Total	Left	Thru	Right	U-TURN	App. Total	Int. Total
07:00	0	0	0	0	0	0	0	0	0	0	0	0	0	0	0	0	0	0	0	0	0
07:15	0	0	0	0	0	0	1	0	0	1	0	0	0	0	0	1	0	0	0	1	2
07:30	0	0	0	0	0	0	1	2	0	3	0	0	0	0	0	1	0	0	0	1	4
07:45	0	0	0	0	0	0	0	0	0	0	0	0	0	0	0	0	0	0	0	0	0
Total	0	0	0	0	0	0	2	2	0	4	0	0	0	0	0	2	0	0	0	2	6
08:00	0	0	0	0	0	0	0	0	0	0	0	0	0	0	0	0	0	0	0	0	0
08:15	0	0	0	0	0	0	0	0	0	0	0	0	0	0	0	0	1	0	0	1	1
08:30	0	0	0	0	0	0	1	0	0	1	0	1	0	0	1	0	1	0	0	1	3
08:45	0	0	0	0	0	0	0	0	0	0	0	0	0	0	0	0	0	0	0	0	0
Total	0	0	0	0	0	0	1	0	0	1	0	1	0	0	1	0	2	0	0	2	4
Grand Total	0	0	0	0	0	0	3	2	0	5	0	1	0	0	1	2	2	0	0	4	10
Apprch %	0	0	0	0		0	60	40	0		0	100	0	0		50	50	0	0		
Total %	0	0	0	0	0	0	30	20	0	50	0	10	0	0	10	20	20	0	0	40	

	National Dr Southbound					Boggy Ford Rd Westbound					National Dr Northbound					Boggy Ford Rd Eastbound					
Start Time	Left	Thru	Right	U-TURN	App. Total	Left	Thru	Right	U-TURN	App. Total	Left	Thru	Right	U-TURN	App. Total	Left	Thru	Right	U-TURN	App. Total	Int. Total
Peak Hour Analysis From 07:00 to 08:45 - Peak 1 of 1																					
Peak Hour for Entire Intersection Begins at 07:00																					
07:00	0	0	0	0	0	0	0	0	0	0	0	0	0	0	0	0	0	0	0	0	0
07:15	0	0	0	0	0	0	**1**	0	0	1	0	0	0	0	0	**1**	0	0	0	**1**	2
07:30	0	0	0	0	0	0	1	**2**	0	**3**	0	0	0	0	0	1	0	0	0	1	**4**
07:45	0	0	0	0	0	0	0	0	0	0	0	0	0	0	0	0	0	0	0	0	0
Total Volume	0	0	0	0	0	0	2	2	0	4	0	0	0	0	0	2	0	0	0	2	6
% App. Total	0	0	0	0		0	50	50	0		0	0	0	0		100	0	0	0		
PHF	.000	.000	.000	.000	.000	.000	.500	.250	.000	.333	.000	.000	.000	.000	.000	.500	.000	.000	.000	.500	.375

Peak Hour Analysis From 07:00 to 08:45 - Peak 1 of 1
Peak Hour for Each Approach Begins at:

	07:00					07:00					07:45					07:00				
+0 mins.	0	0	0	0	0	0	0	0	0	0	0	0	0	0	0	0	0	0	0	0
+15 mins.	0	0	0	0	0	0	**1**	0	0	1	0	0	0	0	0	**1**	0	0	0	**1**
+30 mins.	0	0	0	0	0	0	1	**2**	0	**3**	0	0	0	0	0	1	0	0	0	1
+45 mins.	0	0	0	0	0	0	0	0	0	0	0	**1**	0	0	**1**	0	0	0	0	0
Total Volume	0	0	0	0	0	0	2	2	0	4	0	1	0	0	1	2	0	0	0	2
% App. Total	0	0	0	0		0	50	50	0		0	100	0	0		100	0	0	0	
PHF	.000	.000	.000	.000	.000	.000	.500	.250	.000	.333	.000	.250	.000	.000	.250	.500	.000	.000	.000	.500

GRAM Traffic Counting, inc.

3751 FM 1105, Bldg. A
Georgetown, TX 78626
512-832-8650

File Name : Site 3 - Boggy Ford Rd & National Dr - AM
Site Code : 3
Start Date : 11/15/2023
Page No : 5

Groups Printed- Pedestrians

	National Dr Southbound					Boggy Ford Rd Westbound					National Dr Northbound					Boggy Ford Rd Eastbound					
Start Time	Left	Thru	Right	U-TURN	App. Total	Left	Thru	Right	U-TURN	App. Total	Left	Thru	Right	U-TURN	App. Total	Left	Thru	Right	U-TURN	App. Total	Int. Total
07:00	0	0	0	0	0	0	0	0	0	0	0	0	0	0	0	0	0	0	0	0	0
07:15	0	0	0	0	0	0	0	0	0	0	0	0	0	0	0	0	0	0	0	0	0
07:30	0	0	0	0	0	0	0	0	0	0	0	0	0	0	0	0	0	0	0	0	0
07:45	0	0	0	0	0	0	0	0	0	0	0	0	0	0	0	0	0	0	0	0	0
Total	0	0	0	0	0	0	0	0	0	0	0	0	0	0	0	0	0	0	0	0	0
08:00	0	0	0	0	0	0	0	0	0	0	0	0	0	0	0	0	0	0	0	0	0
08:15	0	0	0	0	0	0	0	0	0	0	0	0	0	0	0	0	0	0	0	0	0
08:30	0	0	0	0	0	0	0	0	0	0	0	0	0	0	0	0	2	0	0	2	2
08:45	0	0	0	0	0	0	0	0	0	0	0	0	0	0	0	0	0	0	0	0	0
Total	0	0	0	0	0	0	0	0	0	0	0	0	0	0	0	0	2	0	0	2	2
Grand Total	0	0	0	0	0	0	0	0	0	0	0	0	0	0	0	0	2	0	0	2	2
Apprch %	0	0	0	0		0	0	0	0		0	0	0	0		0	100	0	0		
Total %	0	0	0	0	0	0	0	0	0	0	0	0	0	0	0	0	100	0	0	100	

	National Dr Southbound					Boggy Ford Rd Westbound					National Dr Northbound					Boggy Ford Rd Eastbound					
Start Time	Left	Thru	Right	U-TURN	App. Total	Left	Thru	Right	U-TURN	App. Total	Left	Thru	Right	U-TURN	App. Total	Left	Thru	Right	U-TURN	App. Total	Int. Total
Peak Hour Analysis From 07:00 to 08:45 - Peak 1 of 1																					
Peak Hour for Entire Intersection Begins at 07:45																					
07:45	0	0	0	0	0	0	0	0	0	0	0	0	0	0	0	0	0	0	0	0	0
08:00	0	0	0	0	0	0	0	0	0	0	0	0	0	0	0	0	0	0	0	0	0
08:15	0	0	0	0	0	0	0	0	0	0	0	0	0	0	0	0	0	0	0	0	0
08:30	0	0	0	0	0	0	0	0	0	0	0	0	0	0	0	0	**2**	0	0	**2**	**2**
Total Volume	0	0	0	0	0	0	0	0	0	0	0	0	0	0	0	0	2	0	0	2	2
% App. Total	0	0	0	0		0	0	0	0		0	0	0	0		0	100	0	0		
PHF	.000	.000	.000	.000	.000	.000	.000	.000	.000	.000	.000	.000	.000	.000	.000	.000	.250	.000	.000	.250	.250

Peak Hour Analysis From 07:00 to 08:45 - Peak 1 of 1
Peak Hour for Each Approach Begins at:

	07:00					07:00					07:00					07:45				
+0 mins.	0	0	0	0	0	0	0	0	0	0	0	0	0	0	0	0	0	0	0	0
+15 mins.	0	0	0	0	0	0	0	0	0	0	0	0	0	0	0	0	0	0	0	0
+30 mins.	0	0	0	0	0	0	0	0	0	0	0	0	0	0	0	0	0	0	0	0
+45 mins.	0	0	0	0	0	0	0	0	0	0	0	0	0	0	0	0	**2**	0	0	**2**
Total Volume	0	0	0	0	0	0	0	0	0	0	0	0	0	0	0	0	2	0	0	2
% App. Total	0	0	0	0		0	0	0	0		0	0	0	0		0	100	0	0	
PHF	.000	.000	.000	.000	.000	.000	.000	.000	.000	.000	.000	.000	.000	.000	.000	.000	.250	.000	.000	.250

GRAM Traffic Counting, inc.

3751 FM 1105, Bldg. A
Georgetown, TX 78626
512-832-8650

File Name : Site 3 - Boggy Ford Rd & National Dr - PM
Site Code : 3
Start Date : 11/15/2023
Page No : 1

Groups Printed- Vehicles - Heavy Vehicles

	National Dr Southbound					Boggy Ford Rd Westbound					National Dr Northbound					Boggy Ford Rd Eastbound					
Start Time	Left	Thru	Right	U-TURN	App. Total	Left	Thru	Right	U-TURN	App. Total	Left	Thru	Right	U-TURN	App. Total	Left	Thru	Right	U-TURN	App. Total	Int. Total
14:00	3	2	3	0	8	0	47	3	0	50	0	0	0	0	0	2	53	1	0	56	114
14:15	4	3	1	0	8	0	56	6	0	62	0	2	0	0	2	3	29	0	0	32	104
14:30	2	3	4	0	9	0	48	7	0	55	0	2	0	0	2	2	38	0	0	40	106
14:45	7	1	1	0	9	0	39	5	0	44	0	4	1	0	5	5	44	1	0	50	108
Total	16	9	9	0	34	0	190	21	0	211	0	8	1	0	9	12	164	2	0	178	432
15:00	7	1	4	0	12	1	42	3	0	46	0	3	0	0	3	1	38	1	0	40	101
15:15	7	5	1	0	13	0	68	8	0	76	0	4	0	0	4	2	38	0	0	40	133
15:30	8	6	1	0	15	0	93	13	0	106	1	2	0	0	3	2	28	1	0	31	155
15:45	6	4	0	0	10	0	62	11	0	73	1	3	0	0	4	4	53	0	0	57	144
Total	28	16	6	0	50	1	265	35	0	301	2	12	0	0	14	9	157	2	0	168	533
16:00	8	1	1	0	10	0	59	8	0	67	0	1	0	0	1	2	65	0	0	67	145
16:15	3	4	0	0	7	0	100	15	0	115	1	0	1	0	2	2	49	2	0	53	177
16:30	4	3	3	0	10	0	95	12	0	107	0	3	0	0	3	1	52	0	0	53	173
16:45	4	2	3	0	9	0	87	8	0	95	0	2	0	0	2	1	43	1	0	45	151
Total	19	10	7	0	36	0	341	43	0	384	1	6	1	0	8	6	209	3	0	218	646
17:00	3	2	3	0	8	0	84	9	0	93	0	1	0	0	1	2	40	0	0	42	144
17:15	6	2	1	0	9	0	65	7	0	72	1	2	0	0	3	2	65	1	0	68	152
17:30	6	6	1	0	13	0	76	5	0	81	0	1	0	0	1	0	59	0	0	59	154
17:45	9	3	1	0	13	0	77	7	0	84	0	4	1	0	5	0	54	0	0	54	156
Total	24	13	6	0	43	0	302	28	0	330	1	8	1	0	10	4	218	1	0	223	606
18:00	6	2	1	0	9	0	82	10	0	92	0	4	0	0	4	1	37	1	0	39	144
18:15	7	1	4	0	12	0	56	3	0	59	1	3	0	0	4	1	37	0	0	38	113
18:30	3	2	2	0	7	0	57	11	0	68	1	0	0	0	1	0	32	1	0	33	109
18:45	3	2	0	0	5	0	59	7	0	66	0	2	0	0	2	1	24	0	0	25	98
Total	19	7	7	0	33	0	254	31	0	285	2	9	0	0	11	3	130	2	0	135	464
Grand Total	106	55	35	0	196	1	1352	158	0	1511	6	43	3	0	52	34	878	10	0	922	2681
Apprch %	54.1	28.1	17.9	0		0.1	89.5	10.5	0		11.5	82.7	5.8	0		3.7	95.2	1.1	0		
Total %	4	2.1	1.3	0	7.3	0	50.4	5.9	0	56.4	0.2	1.6	0.1	0	1.9	1.3	32.7	0.4	0	34.4	
Vehicles	105	55	34	0	194	1	1331	152	0	1484	6	43	3	0	52	33	869	10	0	912	2642
% Vehicles	99.1	100	97.1	0	99	100	98.4	96.2	0	98.2	100	100	100	0	100	97.1	99	100	0	98.9	98.5
Heavy Vehicles	1	0	1	0	2	0	21	6	0	27	0	0	0	0	0	1	9	0	0	10	39
% Heavy Vehicles	0.9	0	2.9	0	1	0	1.6	3.8	0	1.8	0	0	0	0	0	2.9	1	0	0	1.1	1.5

GRAM Traffic Counting, inc.

3751 FM 1105, Bldg. A
Georgetown, TX 78626
512-832-8650

File Name : Site 3 - Boggy Ford Rd & National Dr - PM
Site Code : 3
Start Date : 11/15/2023
Page No : 2

	National Dr Southbound					Boggy Ford Rd Westbound					National Dr Northbound					Boggy Ford Rd Eastbound					
Start Time	Left	Thru	Right	U-TURN	App. Total	Left	Thru	Right	U-TURN	App. Total	Left	Thru	Right	U-TURN	App. Total	Left	Thru	Right	U-TURN	App. Total	Int. Total
Peak Hour Analysis From 14:00 to 15:45 - Peak 1 of 1																					
Peak Hour for Entire Intersection Begins at 15:00																					
15:00	7	1	**4**	0	12	**1**	42	3	0	46	0	3	0	0	3	1	38	**1**	0	40	101
15:15	7	5	1	0	13	0	68	8	0	76	0	**4**	0	0	**4**	2	38	0	0	40	133
15:30	**8**	**6**	1	0	**15**	0	**93**	**13**	0	**106**	**1**	2	0	0	3	2	28	1	0	31	**155**
15:45	6	4	0	0	10	0	62	11	0	73	1	3	0	0	4	**4**	**53**	0	0	**57**	144
Total Volume	28	16	6	0	50	1	265	35	0	301	2	12	0	0	14	9	157	2	0	168	533
% App. Total	56	32	12	0		0.3	88	11.6	0		14.3	85.7	0	0		5.4	93.5	1.2	0		
PHF	.875	.667	.375	.000	.833	.250	.712	.673	.000	.710	.500	.750	.000	.000	.875	.563	.741	.500	.000	.737	.860
Vehicles	28	16	5	0	49	1	259	33	0	293	2	12	0	0	14	9	153	2	0	164	520
% Vehicles	100	100	83.3	0	98.0	100	97.7	94.3	0	97.3	100	100	0	0	100	100	97.5	100	0	97.6	97.6
Heavy Vehicles	0	0	1	0	1	0	6	2	0	8	0	0	0	0	0	0	4	0	0	4	13
% Heavy Vehicles	0	0	16.7	0	2.0	0	2.3	5.7	0	2.7	0	0	0	0	0	0	2.5	0	0	2.4	2.4

Peak Hour Analysis From 14:00 to 15:45 - Peak 1 of 1
Peak Hour for Each Approach Begins at:

	15:00					15:00					14:45					14:00				
+0 mins.	7	1	**4**	0	12	**1**	42	3	0	46	0	**4**	**1**	0	**5**	2	**53**	**1**	0	**56**
+15 mins.	7	5	1	0	13	0	68	8	0	76	0	3	0	0	3	3	29	0	0	32
+30 mins.	**8**	**6**	1	0	**15**	0	**93**	**13**	0	**106**	0	4	0	0	4	2	38	0	0	40
+45 mins.	6	4	0	0	10	0	62	11	0	73	**1**	2	0	0	3	**5**	44	1	0	50
Total Volume	28	16	6	0	50	1	265	35	0	301	1	13	1	0	15	12	164	2	0	178
% App. Total	56	32	12	0		0.3	88	11.6	0		6.7	86.7	6.7	0		6.7	92.1	1.1	0	
PHF	.875	.667	.375	.000	.833	.250	.712	.673	.000	.710	.250	.813	.250	.000	.750	.600	.774	.500	.000	.795
Vehicles	28	16	5	0	49	1	259	33	0	293	1	13	1	0	15	12	164	2	0	178
% Vehicles	100	100	83.3	0	98	100	97.7	94.3	0	97.3	100	100	100	0	100	100	100	100	0	100
Heavy Vehicles	0	0	1	0	1	0	6	2	0	8	0	0	0	0	0	0	0	0	0	0
% Heavy Vehicles	0	0	16.7	0	2	0	2.3	5.7	0	2.7	0	0	0	0	0	0	0	0	0	0

GRAM Traffic Counting, inc.

3751 FM 1105, Bldg. A
Georgetown, TX 78626
512-832-8650

File Name : Site 3 - Boggy Ford Rd & National Dr - PM
Site Code : 3
Start Date : 11/15/2023
Page No : 3

Groups Printed- Vehicles

	National Dr Southbound					Boggy Ford Rd Westbound					National Dr Northbound					Boggy Ford Rd Eastbound					
Start Time	Left	Thru	Right	U-TURN	App. Total	Left	Thru	Right	U-TURN	App. Total	Left	Thru	Right	U-TURN	App. Total	Left	Thru	Right	U-TURN	App. Total	Int. Total
14:00	3	2	3	0	8	0	46	3	0	49	0	0	0	0	0	2	53	1	0	56	113
14:15	3	3	1	0	7	0	54	6	0	60	0	2	0	0	2	3	29	0	0	32	101
14:30	2	3	4	0	9	0	48	7	0	55	0	2	0	0	2	2	38	0	0	40	106
14:45	7	1	1	0	9	0	38	5	0	43	0	4	1	0	5	5	44	1	0	50	107
Total	15	9	9	0	33	0	186	21	0	207	0	8	1	0	9	12	164	2	0	178	427
15:00	7	1	4	0	12	1	41	3	0	45	0	3	0	0	3	1	38	1	0	40	100
15:15	7	5	0	0	12	0	67	8	0	75	0	4	0	0	4	2	37	0	0	39	130
15:30	8	6	1	0	15	0	89	13	0	102	1	2	0	0	3	2	28	1	0	31	151
15:45	6	4	0	0	10	0	62	9	0	71	1	3	0	0	4	4	50	0	0	54	139
Total	28	16	5	0	49	1	259	33	0	293	2	12	0	0	14	9	153	2	0	164	520
16:00	8	1	1	0	10	0	57	8	0	65	0	1	0	0	1	2	64	0	0	66	142
16:15	3	4	0	0	7	0	98	14	0	112	1	0	1	0	2	1	49	2	0	52	173
16:30	4	3	3	0	10	0	95	12	0	107	0	3	0	0	3	1	51	0	0	52	172
16:45	4	2	3	0	9	0	86	8	0	94	0	2	0	0	2	1	43	1	0	45	150
Total	19	10	7	0	36	0	336	42	0	378	1	6	1	0	8	5	207	3	0	215	637
17:00	3	2	3	0	8	0	83	7	0	90	0	1	0	0	1	2	40	0	0	42	141
17:15	6	2	1	0	9	0	65	6	0	71	1	2	0	0	3	2	65	1	0	68	151
17:30	6	6	1	0	13	0	74	5	0	79	0	1	0	0	1	0	59	0	0	59	152
17:45	9	3	1	0	13	0	76	7	0	83	0	4	1	0	5	0	53	0	0	53	154
Total	24	13	6	0	43	0	298	25	0	323	1	8	1	0	10	4	217	1	0	222	598
18:00	6	2	1	0	9	0	81	10	0	91	0	4	0	0	4	1	36	1	0	38	142
18:15	7	1	4	0	12	0	56	3	0	59	1	3	0	0	4	1	36	0	0	37	112
18:30	3	2	2	0	7	0	57	11	0	68	1	0	0	0	1	0	32	1	0	33	109
18:45	3	2	0	0	5	0	58	7	0	65	0	2	0	0	2	1	24	0	0	25	97
Total	19	7	7	0	33	0	252	31	0	283	2	9	0	0	11	3	128	2	0	133	460
Grand Total	105	55	34	0	194	1	1331	152	0	1484	6	43	3	0	52	33	869	10	0	912	2642
Apprch %	54.1	28.4	17.5	0		0.1	89.7	10.2	0		11.5	82.7	5.8	0		3.6	95.3	1.1	0		
Total %	4	2.1	1.3	0	7.3	0	50.4	5.8	0	56.2	0.2	1.6	0.1	0	2	1.2	32.9	0.4	0	34.5	

	National Dr Southbound					Boggy Ford Rd Westbound					National Dr Northbound					Boggy Ford Rd Eastbound					
Start Time	Left	Thru	Right	U-TURN	App. Total	Left	Thru	Right	U-TURN	App. Total	Left	Thru	Right	U-TURN	App. Total	Left	Thru	Right	U-TURN	App. Total	Int. Total
Peak Hour Analysis From 14:00 to 15:45 - Peak 1 of 1																					
Peak Hour for Entire Intersection Begins at 15:00																					
15:00	7	1	**4**	0	12	**1**	41	3	0	45	0	3	0	0	3	1	38	**1**	0	40	100
15:15	7	5	0	0	12	0	67	8	0	75	0	**4**	0	0	**4**	2	37	0	0	39	130
15:30	**8**	**6**	1	0	**15**	0	**89**	**13**	0	**102**	**1**	2	0	0	3	2	28	1	0	31	**151**
15:45	6	4	0	0	10	0	62	9	0	71	1	3	0	0	4	**4**	**50**	0	0	**54**	139
Total Volume	28	16	5	0	49	1	259	33	0	293	2	12	0	0	14	9	153	2	0	164	520
% App. Total	57.1	32.7	10.2	0		0.3	88.4	11.3	0		14.3	85.7	0	0		5.5	93.3	1.2	0		
PHF	.875	.667	.313	.000	.817	.250	.728	.635	.000	.718	.500	.750	.000	.000	.875	.563	.765	.500	.000	.759	.861

GRAM Traffic Counting, inc.

3751 FM 1105, Bldg. A
Georgetown, TX 78626
512-832-8650

File Name : Site 3 - Boggy Ford Rd & National Dr - PM
Site Code : 3
Start Date : 11/15/2023
Page No : 4

	National Dr Southbound					Boggy Ford Rd Westbound					National Dr Northbound					Boggy Ford Rd Eastbound					
Start Time	Left	Thru	Right	U-TURN	App. Total	Left	Thru	Right	U-TURN	App. Total	Left	Thru	Right	U-TURN	App. Total	Left	Thru	Right	U-TURN	App. Total	Int. Total
Peak Hour Analysis From 14:00 to 15:45 - Peak 1 of 1																					
Peak Hour for Each Approach Begins at:																					
	15:00					15:00					14:45					14:00					
+0 mins.	7	1	**4**	0	12	**1**	41	3	0	45	0	**4**	**1**	0	**5**	2	**53**	**1**	0	**56**	
+15 mins.	7	5	0	0	12	0	67	8	0	75	0	3	0	0	3	3	29	0	0	32	
+30 mins.	**8**	**6**	1	0	**15**	0	**89**	**13**	0	**102**	0	4	0	0	4	2	38	0	0	40	
+45 mins.	6	4	0	0	10	0	62	9	0	71	**1**	2	0	0	3	**5**	44	1	0	50	
Total Volume	28	16	5	0	49	1	259	33	0	293	1	13	1	0	15	12	164	2	0	178	
% App. Total	57.1	32.7	10.2	0		0.3	88.4	11.3	0		6.7	86.7	6.7	0		6.7	92.1	1.1	0		
PHF	.875	.667	.313	.000	.817	.250	.728	.635	.000	.718	.250	.813	.250	.000	.750	.600	.774	.500	.000	.795	

GRAM Traffic Counting, inc.

3751 FM 1105, Bldg. A
Georgetown, TX 78626
512-832-8650

File Name : Site 3 - Boggy Ford Rd & National Dr - PM
Site Code : 3
Start Date : 11/15/2023
Page No : 5

Groups Printed- Heavy Vehicles

	National Dr Southbound					Boggy Ford Rd Westbound					National Dr Northbound					Boggy Ford Rd Eastbound					
Start Time	Left	Thru	Right	U-TURN	App. Total	Left	Thru	Right	U-TURN	App. Total	Left	Thru	Right	U-TURN	App. Total	Left	Thru	Right	U-TURN	App. Total	Int. Total
14:00	0	0	0	0	0	0	1	0	0	1	0	0	0	0	0	0	0	0	0	0	1
14:15	1	0	0	0	1	0	2	0	0	2	0	0	0	0	0	0	0	0	0	0	3
14:30	0	0	0	0	0	0	0	0	0	0	0	0	0	0	0	0	0	0	0	0	0
14:45	0	0	0	0	0	0	1	0	0	1	0	0	0	0	0	0	0	0	0	0	1
Total	1	0	0	0	1	0	4	0	0	4	0	0	0	0	0	0	0	0	0	0	5
15:00	0	0	0	0	0	0	1	0	0	1	0	0	0	0	0	0	0	0	0	0	1
15:15	0	0	1	0	1	0	1	0	0	1	0	0	0	0	0	0	1	0	0	1	3
15:30	0	0	0	0	0	0	4	0	0	4	0	0	0	0	0	0	0	0	0	0	4
15:45	0	0	0	0	0	0	0	2	0	2	0	0	0	0	0	0	3	0	0	3	5
Total	0	0	1	0	1	0	6	2	0	8	0	0	0	0	0	0	4	0	0	4	13
16:00	0	0	0	0	0	0	2	0	0	2	0	0	0	0	0	0	1	0	0	1	3
16:15	0	0	0	0	0	0	2	1	0	3	0	0	0	0	0	1	0	0	0	1	4
16:30	0	0	0	0	0	0	0	0	0	0	0	0	0	0	0	0	1	0	0	1	1
16:45	0	0	0	0	0	0	1	0	0	1	0	0	0	0	0	0	0	0	0	0	1
Total	0	0	0	0	0	0	5	1	0	6	0	0	0	0	0	1	2	0	0	3	9
17:00	0	0	0	0	0	0	1	2	0	3	0	0	0	0	0	0	0	0	0	0	3
17:15	0	0	0	0	0	0	0	1	0	1	0	0	0	0	0	0	0	0	0	0	1
17:30	0	0	0	0	0	0	2	0	0	2	0	0	0	0	0	0	0	0	0	0	2
17:45	0	0	0	0	0	0	1	0	0	1	0	0	0	0	0	0	1	0	0	1	2
Total	0	0	0	0	0	0	4	3	0	7	0	0	0	0	0	0	1	0	0	1	8
18:00	0	0	0	0	0	0	1	0	0	1	0	0	0	0	0	0	1	0	0	1	2
18:15	0	0	0	0	0	0	0	0	0	0	0	0	0	0	0	0	1	0	0	1	1
18:30	0	0	0	0	0	0	0	0	0	0	0	0	0	0	0	0	0	0	0	0	0
18:45	0	0	0	0	0	0	1	0	0	1	0	0	0	0	0	0	0	0	0	0	1
Total	0	0	0	0	0	0	2	0	0	2	0	0	0	0	0	0	2	0	0	2	4
Grand Total	1	0	1	0	2	0	21	6	0	27	0	0	0	0	0	1	9	0	0	10	39
Apprch %	50	0	50	0		0	77.8	22.2	0		0	0	0	0		10	90	0	0		
Total %	2.6	0	2.6	0	5.1	0	53.8	15.4	0	69.2	0	0	0	0	0	2.6	23.1	0	0	25.6	

	National Dr Southbound					Boggy Ford Rd Westbound					National Dr Northbound					Boggy Ford Rd Eastbound					
Start Time	Left	Thru	Right	U-TURN	App. Total	Left	Thru	Right	U-TURN	App. Total	Left	Thru	Right	U-TURN	App. Total	Left	Thru	Right	U-TURN	App. Total	Int. Total
Peak Hour Analysis From 14:00 to 15:45 - Peak 1 of 1																					
Peak Hour for Entire Intersection Begins at 15:00																					
15:00	0	0	0	0	0	0	1	0	0	1	0	0	0	0	0	0	0	0	0	0	1
15:15	0	0	**1**	0	**1**	0	1	0	0	1	0	0	0	0	0	0	1	0	0	1	3
15:30	0	0	0	0	0	0	**4**	0	0	**4**	0	0	0	0	0	0	0	0	0	0	4
15:45	0	0	0	0	0	0	0	**2**	0	2	0	0	0	0	0	0	**3**	0	0	**3**	**5**
Total Volume	0	0	1	0	1	0	6	2	0	8	0	0	0	0	0	0	4	0	0	4	13
% App. Total	0	0	100	0		0	75	25	0		0	0	0	0		0	100	0	0		
PHF	.000	.000	.250	.000	.250	.000	.375	.250	.000	.500	.000	.000	.000	.000	.000	.000	.333	.000	.000	.333	.650

GRAM Traffic Counting, inc.

3751 FM 1105, Bldg. A
Georgetown, TX 78626
512-832-8650

File Name : Site 3 - Boggy Ford Rd & National Dr - PM
Site Code : 3
Start Date : 11/15/2023
Page No : 6

	National Dr Southbound					Boggy Ford Rd Westbound					National Dr Northbound					Boggy Ford Rd Eastbound					
Start Time	Left	Thru	Right	U-TURN	App. Total	Left	Thru	Right	U-TURN	App. Total	Left	Thru	Right	U-TURN	App. Total	Left	Thru	Right	U-TURN	App. Total	Int. Total
Peak Hour Analysis From 14:00 to 15:45 - Peak 1 of 1																					
Peak Hour for Each Approach Begins at:																					
	14:00					15:00					14:00					15:00					
+0 mins.	0	0	0	0	0	0	1	0	0	1	0	0	0	0	0	0	0	0	0	0	
+15 mins.	**1**	0	0	0	**1**	0	1	0	0	1	0	0	0	0	0	0	1	0	0	1	
+30 mins.	0	0	0	0	0	0	**4**	0	0	**4**	0	0	0	0	0	0	0	0	0	0	
+45 mins.	0	0	0	0	0	0	0	**2**	0	2	0	0	0	0	0	0	**3**	0	0	**3**	
Total Volume	1	0	0	0	1	0	6	2	0	8	0	0	0	0	0	0	4	0	0	4	
% App. Total	100	0	0	0		0	75	25	0		0	0	0	0		0	100	0	0		
PHF	.250	.000	.000	.000	.250	.000	.375	.250	.000	.500	.000	.000	.000	.000	.000	.000	.333	.000	.000	.333	

GRAM Traffic Counting, inc.

3751 FM 1105, Bldg. A
Georgetown, TX 78626
512-832-8650

File Name : Site 3 - Boggy Ford Rd & National Dr - PM
Site Code : 3
Start Date : 11/15/2023
Page No : 7

Groups Printed- Pedestrians

	National Dr Southbound					Boggy Ford Rd Westbound					National Dr Northbound					Boggy Ford Rd Eastbound					
Start Time	Left	Thru	Right	U-TURN	App. Total	Left	Thru	Right	U-TURN	App. Total	Left	Thru	Right	U-TURN	App. Total	Left	Thru	Right	U-TURN	App. Total	Int. Total
14:00	0	0	0	0	0	0	0	0	0	0	0	0	0	0	0	0	0	0	0	0	0
14:15	0	0	0	0	0	0	0	0	0	0	0	0	0	0	0	0	0	0	0	0	0
14:30	0	0	0	0	0	0	0	0	0	0	0	0	0	0	0	0	0	0	0	0	0
14:45	0	0	0	0	0	0	0	0	0	0	0	0	0	0	0	0	0	0	0	0	0
Total	0	0	0	0	0	0	0	0	0	0	0	0	0	0	0	0	0	0	0	0	0
15:00	0	0	0	0	0	0	0	0	0	0	0	0	0	0	0	0	0	0	0	0	0
15:15	0	0	0	0	0	0	0	0	0	0	0	0	0	0	0	0	0	0	0	0	0
15:30	0	0	0	0	0	0	0	0	0	0	0	0	0	0	0	0	0	0	0	0	0
15:45	0	0	0	0	0	0	0	0	0	0	0	0	0	0	0	0	0	0	0	0	0
Total	0	0	0	0	0	0	0	0	0	0	0	0	0	0	0	0	0	0	0	0	0
16:00	0	0	0	0	0	0	0	0	0	0	0	0	0	0	0	0	0	0	0	0	0
16:15	0	0	0	0	0	0	0	0	0	0	0	0	0	0	0	0	0	0	0	0	0
16:30	0	0	0	0	0	0	1	0	0	1	0	0	0	0	0	0	1	0	0	1	2
16:45	0	0	0	0	0	0	0	0	0	0	0	0	0	0	0	0	2	0	0	2	2
Total	0	0	0	0	0	0	1	0	0	1	0	0	0	0	0	0	3	0	0	3	4
17:00	0	0	0	0	0	0	0	0	0	0	0	0	0	0	0	0	0	0	0	0	0
17:15	0	0	0	0	0	0	0	0	0	0	0	0	0	0	0	0	0	0	0	0	0
17:30	0	0	0	0	0	0	0	0	0	0	0	0	0	0	0	0	0	0	0	0	0
17:45	0	0	0	0	0	0	0	0	0	0	0	0	0	0	0	0	0	0	0	0	0
Total	0	0	0	0	0	0	0	0	0	0	0	0	0	0	0	0	0	0	0	0	0
18:00	0	0	0	0	0	0	0	0	0	0	0	0	0	0	0	0	0	0	0	0	0
18:15	0	0	0	0	0	0	0	0	0	0	0	0	0	0	0	0	0	0	0	0	0
18:30	0	0	0	0	0	0	0	0	0	0	0	0	0	0	0	0	0	0	0	0	0
18:45	0	0	0	0	0	0	0	0	0	0	0	0	0	0	0	0	0	0	0	0	0
Total	0	0	0	0	0	0	0	0	0	0	0	0	0	0	0	0	0	0	0	0	0
Grand Total	0	0	0	0	0	0	1	0	0	1	0	0	0	0	0	0	3	0	0	3	4
Apprch %	0	0	0	0		0	100	0	0		0	0	0	0		0	100	0	0		
Total %	0	0	0	0	0	0	25	0	0	25	0	0	0	0	0	0	75	0	0	75	

	National Dr Southbound					Boggy Ford Rd Westbound					National Dr Northbound					Boggy Ford Rd Eastbound					
Start Time	Left	Thru	Right	U-TURN	App. Total	Left	Thru	Right	U-TURN	App. Total	Left	Thru	Right	U-TURN	App. Total	Left	Thru	Right	U-TURN	App. Total	Int. Total
Peak Hour Analysis From 14:00 to 15:45 - Peak 1 of 1																					
Peak Hour for Entire Intersection Begins at 14:00																					
14:00	0	0	0	0	0	0	0	0	0	0	0	0	0	0	0	0	0	0	0	0	0
14:15	0	0	0	0	0	0	0	0	0	0	0	0	0	0	0	0	0	0	0	0	0
14:30	0	0	0	0	0	0	0	0	0	0	0	0	0	0	0	0	0	0	0	0	0
14:45	0	0	0	0	0	0	0	0	0	0	0	0	0	0	0	0	0	0	0	0	0
Total Volume	0	0	0	0	0	0	0	0	0	0	0	0	0	0	0	0	0	0	0	0	0
% App. Total	0	0	0	0		0	0	0	0		0	0	0	0		0	0	0	0		
PHF	.000	.000	.000	.000	.000	.000	.000	.000	.000	.000	.000	.000	.000	.000	.000	.000	.000	.000	.000	.000	.000

GRAM Traffic Counting, inc.

3751 FM 1105, Bldg. A
Georgetown, TX 78626
512-832-8650

File Name : Site 3 - Boggy Ford Rd & National Dr - PM
Site Code : 3
Start Date : 11/15/2023
Page No : 8

	National Dr Southbound					Boggy Ford Rd Westbound					National Dr Northbound					Boggy Ford Rd Eastbound					
Start Time	Left	Thru	Right	U-TURN	App. Total	Left	Thru	Right	U-TURN	App. Total	Left	Thru	Right	U-TURN	App. Total	Left	Thru	Right	U-TURN	App. Total	Int. Total
Peak Hour Analysis From 14:00 to 15:45 - Peak 1 of 1																					
Peak Hour for Each Approach Begins at:																					
	14:00					14:00					14:00					14:00					
+0 mins.	0	0	0	0	0	0	0	0	0	0	0	0	0	0	0	0	0	0	0	0	
+15 mins.	0	0	0	0	0	0	0	0	0	0	0	0	0	0	0	0	0	0	0	0	
+30 mins.	0	0	0	0	0	0	0	0	0	0	0	0	0	0	0	0	0	0	0	0	
+45 mins.	0	0	0	0	0	0	0	0	0	0	0	0	0	0	0	0	0	0	0	0	
Total Volume	0	0	0	0	0	0	0	0	0	0	0	0	0	0	0	0	0	0	0	0	
% App. Total	0	0	0	0		0	0	0	0		0	0	0	0		0	0	0	0		
PHF	.000	.000	.000	.000	.000	.000	.000	.000	.000	.000	.000	.000	.000	.000	.000	.000	.000	.000	.000	.000	

APPENDIX C

INTERSECTION ANALYSES

APPENDIX C.1

INTERSECTION ANALYSES

EXISTING CONDITIONS

Queues
1: Lohman Ford Rd & Dawn Dr

12/26/2023

Lane Group	EBT	EBR	WBT	NBL	NBT	SBL	SBT	SBR
Lane Group Flow (vph)	359	58	66	22	734	16	459	159
v/c Ratio	0.80	0.11	0.42	0.06	0.87	0.09	0.55	0.20
Control Delay	49.4	0.4	32.1	12.1	36.8	12.6	22.0	3.7
Queue Delay	0.0	0.0	0.0	0.0	0.0	0.0	0.0	0.0
Total Delay	49.4	0.4	32.1	12.1	36.8	12.6	22.0	3.7
Queue Length 50th (ft)	199	0	15	7	356	5	178	0
Queue Length 95th (ft)	#365	0	56	17	#622	14	300	31
Internal Link Dist (ft)	425		298		1363		345	
Turn Bay Length (ft)				105		190		180
Base Capacity (vph)	516	569	159	374	1033	183	1036	950
Starvation Cap Reductn	0	0	0	0	0	0	0	0
Spillback Cap Reductn	0	0	0	0	0	0	0	0
Storage Cap Reductn	0	0	0	0	0	0	0	0
Reduced v/c Ratio	0.70	0.10	0.42	0.06	0.71	0.09	0.44	0.17

Intersection Summary

95th percentile volume exceeds capacity, queue may be longer.
Queue shown is maximum after two cycles.

Movement	EBL	EBT	EBR	WBL	WBT	WBR	NBL	NBT	NBR	SBL	SBT	SBR
Lane Configurations												
Traffic Volume (veh/h)	294	11	49	16	6	34	19	610	14	14	390	135
Future Volume (veh/h)	294	11	49	16	6	34	19	610	14	14	390	135
Initial Q (Qb), veh	0	0	0	0	0	0	0	0	0	0	0	0
Ped-Bike Adj(A_pbT)	1.00		1.00	1.00		1.00	1.00		1.00	1.00		1.00
Parking Bus, Adj	1.00	1.00	1.00	1.00	1.00	1.00	1.00	1.00	1.00	1.00	1.00	1.00
Work Zone On Approach		No			No			No			No	
Adj Sat Flow, veh/h/ln	1856	1856	1856	1856	1856	1856	1856	1856	1856	1856	1856	1856
Adj Flow Rate, veh/h	346	13	58	19	7	40	22	718	16	16	459	159
Peak Hour Factor	0.85	0.85	0.85	0.85	0.85	0.85	0.85	0.85	0.85	0.85	0.85	0.85
Percent Heavy Veh, %	3	3	3	3	3	3	3	3	3	3	3	3
Cap, veh/h	390	15	360	26	9	54	313	784	17	156	795	674
Arrive On Green	0.23	0.23	0.23	0.05	0.05	0.05	0.02	0.43	0.43	0.02	0.43	0.43
Sat Flow, veh/h	1706	64	1572	475	175	1001	1767	1808	40	1767	1856	1572
Grp Volume(v), veh/h	359	0	58	66	0	0	22	0	734	16	459	159
Grp Sat Flow(s),veh/h/ln	1770	0	1572	1652	0	0	1767	0	1848	1767	1856	1572
Q Serve(g_s), s	17.7	0.0	2.7	3.6	0.0	0.0	0.6	0.0	33.7	0.5	17.0	5.8
Cycle Q Clear(g_c), s	17.7	0.0	2.7	3.6	0.0	0.0	0.6	0.0	33.7	0.5	17.0	5.8
Prop In Lane	0.96		1.00	0.29		0.61	1.00		0.02	1.00		1.00
Lane Grp Cap(c), veh/h	405	0	360	89	0	0	313	0	802	156	795	674
V/C Ratio(X)	0.89	0.00	0.16	0.74	0.00	0.00	0.07	0.00	0.92	0.10	0.58	0.24
Avail Cap(c_a), veh/h	470	0	418	110	0	0	370	0	941	221	944	800
HCM Platoon Ratio	1.00	1.00	1.00	1.00	1.00	1.00	1.00	1.00	1.00	1.00	1.00	1.00
Upstream Filter(I)	1.00	0.00	1.00	1.00	0.00	0.00	1.00	0.00	1.00	1.00	1.00	1.00
Uniform Delay (d), s/veh	33.7	0.0	27.9	42.2	0.0	0.0	15.4	0.0	24.0	20.2	19.6	16.4
Incr Delay (d2), s/veh	16.5	0.0	0.2	19.0	0.0	0.0	0.1	0.0	12.1	0.3	0.7	0.2
Initial Q Delay(d3),s/veh	0.0	0.0	0.0	0.0	0.0	0.0	0.0	0.0	0.0	0.0	0.0	0.0
%ile BackOfQ(50%),veh/ln	9.3	0.0	1.0	1.9	0.0	0.0	0.2	0.0	15.9	0.2	6.9	2.0
Unsig. Movement Delay, s/veh												
LnGrp Delay(d),s/veh	50.2	0.0	28.1	61.2	0.0	0.0	15.5	0.0	36.2	20.5	20.3	16.6
LnGrp LOS	D	A	C	E	A	A	B	A	D	C	C	B
Approach Vol, veh/h		417			66			756			634	
Approach Delay, s/veh		47.2			61.2			35.6			19.4	
Approach LOS		D			E			D			B	

Timer - Assigned Phs	1	2		4	5	6		8
Phs Duration (G+Y+Rc), s	7.7	45.2		10.9	8.1	44.7		26.7
Change Period (Y+Rc), s	6.0	6.0		6.0	6.0	6.0		6.0
Max Green Setting (Gmax), s	5.0	46.0		6.0	5.0	46.0		24.0
Max Q Clear Time (g_c+I1), s	2.5	35.7		5.6	2.6	19.0		19.7
Green Ext Time (p_c), s	0.0	3.5		0.0	0.0	3.3		0.9

Intersection Summary	
HCM 6th Ctrl Delay	33.6
HCM 6th LOS	C

Lane Group	EBT	WBT	WBR	NBT	SBT	SBR
Lane Group Flow (vph)	484	2	13	225	127	203
v/c Ratio	0.77	0.00	0.02	0.49	0.30	0.37
Control Delay	19.7	7.0	0.0	19.5	17.1	5.3
Queue Delay	0.0	0.0	0.0	0.0	0.0	0.0
Total Delay	19.7	7.0	0.0	19.5	17.1	5.3
Queue Length 50th (ft)	86	0	0	46	25	0
Queue Length 95th (ft)	220	3	0	118	72	40
Internal Link Dist (ft)	1458	1130		711	2455	
Turn Bay Length (ft)			85			135
Base Capacity (vph)	993	1188	1183	793	743	798
Starvation Cap Reductn	0	0	0	0	0	0
Spillback Cap Reductn	0	0	0	0	0	0
Storage Cap Reductn	0	0	0	0	0	0
Reduced v/c Ratio	0.49	0.00	0.01	0.28	0.17	0.25

Intersection Summary

Movement	EBL	EBT	EBR	WBL	WBT	WBR	NBL	NBT	NBR	SBL	SBT	SBR
Lane Configurations												
Traffic Volume (veh/h)	439	3	13	1	1	12	16	194	2	16	103	191
Future Volume (veh/h)	439	3	13	1	1	12	16	194	2	16	103	191
Initial Q (Qb), veh	0	0	0	0	0	0	0	0	0	0	0	0
Ped-Bike Adj(A_pbT)	1.00		1.00	1.00		1.00	1.00		1.00	1.00		1.00
Parking Bus, Adj	1.00	1.00	1.00	1.00	1.00	1.00	1.00	1.00	1.00	1.00	1.00	1.00
Work Zone On Approach		No			No			No			No	
Adj Sat Flow, veh/h/ln	1885	1411	1900	1900	1900	1900	1900	1885	1900	1811	1856	1856
Adj Flow Rate, veh/h	467	3	14	1	1	13	17	206	2	17	110	203
Peak Hour Factor	0.94	0.94	0.94	0.94	0.94	0.94	0.94	0.94	0.94	0.94	0.94	0.94
Percent Heavy Veh, %	1	33	0	0	0	0	0	1	0	6	3	3
Cap, veh/h	698	3	16	551	511	826	109	335	3	122	323	302
Arrive On Green	0.51	0.51	0.51	0.51	0.51	0.51	0.19	0.19	0.19	0.19	0.19	0.19
Sat Flow, veh/h	1023	7	31	815	997	1610	70	1744	16	115	1682	1572
Grp Volume(v), veh/h	484	0	0	2	0	13	225	0	0	127	0	203
Grp Sat Flow(s),veh/h/ln	1060	0	0	1812	0	1610	1830	0	0	1797	0	1572
Q Serve(g_s), s	16.6	0.0	0.0	0.0	0.0	0.2	0.7	0.0	0.0	0.0	0.0	4.9
Cycle Q Clear(g_c), s	16.7	0.0	0.0	0.0	0.0	0.2	4.5	0.0	0.0	2.4	0.0	4.9
Prop In Lane	0.96		0.03	0.50		1.00	0.08		0.01	0.13		1.00
Lane Grp Cap(c), veh/h	718	0	0	1062	0	826	447	0	0	446	0	302
V/C Ratio(X)	0.67	0.00	0.00	0.00	0.00	0.02	0.50	0.00	0.00	0.29	0.00	0.67
Avail Cap(c_a), veh/h	956	0	0	1427	0	1188	893	0	0	876	0	696
HCM Platoon Ratio	1.00	1.00	1.00	1.00	1.00	1.00	1.00	1.00	1.00	1.00	1.00	1.00
Upstream Filter(I)	1.00	0.00	0.00	1.00	0.00	1.00	1.00	0.00	0.00	1.00	0.00	1.00
Uniform Delay (d), s/veh	8.9	0.0	0.0	4.8	0.0	4.9	15.1	0.0	0.0	14.2	0.0	15.2
Incr Delay (d2), s/veh	1.2	0.0	0.0	0.0	0.0	0.0	0.9	0.0	0.0	0.3	0.0	2.6
Initial Q Delay(d3),s/veh	0.0	0.0	0.0	0.0	0.0	0.0	0.0	0.0	0.0	0.0	0.0	0.0
%ile BackOfQ(50%),veh/ln	2.2	0.0	0.0	0.0	0.0	0.0	1.5	0.0	0.0	0.8	0.0	1.5
Unsig. Movement Delay, s/veh												
LnGrp Delay(d),s/veh	10.1	0.0	0.0	4.8	0.0	4.9	16.0	0.0	0.0	14.6	0.0	17.8
LnGrp LOS	B	A	A	A	A	A	B	A	A	B	A	B
Approach Vol, veh/h		484			15			225			330	
Approach Delay, s/veh		10.1			4.9			16.0			16.6	
Approach LOS		B			A			B			B	

Timer - Assigned Phs		2		4		6		8				
Phs Duration (G+Y+Rc), s		13.8		26.9		13.8		26.9				
Change Period (Y+Rc), s		6.0		6.0		6.0		6.0				
Max Green Setting (Gmax), s		18.0		30.0		18.0		30.0				
Max Q Clear Time (g_c+I1), s		6.5		18.7		6.9		2.2				
Green Ext Time (p_c), s		0.8		2.3		0.9		0.0				

Intersection Summary	
HCM 6th Ctrl Delay	13.3
HCM 6th LOS	B

Intersection	
Int Delay, s/veh	2

Movement	EBL	EBT	EBR	WBL	WBT	WBR	NBL	NBT	NBR	SBL	SBT	SBR
Lane Configurations												
Traffic Vol, veh/h	16	291	0	0	144	34	1	11	1	44	10	6
Future Vol, veh/h	16	291	0	0	144	34	1	11	1	44	10	6
Conflicting Peds, #/hr	0	0	0	0	0	0	0	0	0	0	0	0
Sign Control	Free	Free	Free	Free	Free	Free	Stop	Stop	Stop	Stop	Stop	Stop
RT Channelized	-	-	None	-	-	None	-	-	None	-	-	None
Storage Length	-	-	-	-	-	-	-	-	-	-	-	-
Veh in Median Storage, #	-	0	-	-	0	-	-	0	-	-	0	-
Grade, %	-	0	-	-	0	-	-	0	-	-	0	-
Peak Hour Factor	92	92	92	92	92	92	92	92	92	92	92	92
Heavy Vehicles, %	2	2	2	2	2	2	2	2	2	2	2	2
Mvmt Flow	17	316	0	0	157	37	1	12	1	48	11	7

Major/Minor	Major1			Major2			Minor1			Minor2		
Conflicting Flow All	194	0	0	316	0	0	535	544	316	533	526	176
Stage 1	-	-	-	-	-	-	350	350	-	176	176	-
Stage 2	-	-	-	-	-	-	185	194	-	357	350	-
Critical Hdwy	4.12	-	-	4.12	-	-	7.12	6.52	6.22	7.12	6.52	6.22
Critical Hdwy Stg 1	-	-	-	-	-	-	6.12	5.52	-	6.12	5.52	-
Critical Hdwy Stg 2	-	-	-	-	-	-	6.12	5.52	-	6.12	5.52	-
Follow-up Hdwy	2.218	-	-	2.218	-	-	3.518	4.018	3.318	3.518	4.018	3.318
Pot Cap-1 Maneuver	1379	-	-	1244	-	-	456	446	724	458	457	867
Stage 1	-	-	-	-	-	-	666	633	-	826	753	-
Stage 2	-	-	-	-	-	-	817	740	-	661	633	-
Platoon blocked, %		-	-		-	-						
Mov Cap-1 Maneuver	1379	-	-	1244	-	-	439	439	724	443	450	867
Mov Cap-2 Maneuver	-	-	-	-	-	-	439	439	-	443	450	-
Stage 1	-	-	-	-	-	-	656	624	-	814	753	-
Stage 2	-	-	-	-	-	-	799	740	-	638	624	-

Approach	EB	WB	NB	SB
HCM Control Delay, s	0.4	0	13.2	14
HCM LOS			B	B

Minor Lane/Major Mvmt	NBLn1	EBL	EBT	EBR	WBL	WBT	WBR	SBLn1
Capacity (veh/h)	453	1379	-	-	1244	-	-	467
HCM Lane V/C Ratio	0.031	0.013	-	-	-	-	-	0.14
HCM Control Delay (s)	13.2	7.6	0	-	0	-	-	14
HCM Lane LOS	B	A	A	-	A	-	-	B
HCM 95th %tile Q(veh)	0.1	0	-	-	0	-	-	0.5

Queues
1: Lohman Ford Rd & Dawn Dr

12/26/2023

Lane Group	EBT	EBR	WBT	NBL	NBT	SBL	SBT	SBR
Lane Group Flow (vph)	341	64	52	36	427	28	583	312
v/c Ratio	0.72	0.13	0.30	0.13	0.55	0.07	0.74	0.37
Control Delay	41.8	0.5	32.0	12.7	22.6	12.1	28.5	3.6
Queue Delay	0.0	0.0	0.0	0.0	0.0	0.0	0.0	0.0
Total Delay	41.8	0.5	32.0	12.7	22.6	12.1	28.5	3.6
Queue Length 50th (ft)	191	0	14	11	203	8	311	0
Queue Length 95th (ft)	238	0	55	20	264	21	428	17
Internal Link Dist (ft)	425		298		1363		345	
Turn Bay Length (ft)				105		190		180
Base Capacity (vph)	625	618	172	274	1198	375	1204	1116
Starvation Cap Reductn	0	0	0	0	0	0	0	0
Spillback Cap Reductn	0	0	0	0	0	0	0	0
Storage Cap Reductn	0	0	0	0	0	0	0	0
Reduced v/c Ratio	0.55	0.10	0.30	0.13	0.36	0.07	0.48	0.28

Intersection Summary

Movement	EBL	EBT	EBR	WBL	WBT	WBR	NBL	NBT	NBR	SBL	SBT	SBR
Lane Configurations												
Traffic Volume (veh/h)	247	14	41	8	11	24	25	341	12	24	513	231
Future Volume (veh/h)	247	14	41	8	11	24	25	341	12	24	513	231
Initial Q (Qb), veh	0	0	0	0	0	0	0	0	0	0	0	0
Ped-Bike Adj(A_pbT)	1.00		1.00	1.00		1.00	1.00		1.00	1.00		1.00
Parking Bus, Adj	1.00	1.00	1.00	1.00	1.00	1.00	1.00	1.00	1.00	1.00	1.00	1.00
Work Zone On Approach		No			No			No			No	
Adj Sat Flow, veh/h/ln	1870	1796	1752	1900	1767	1841	1900	1885	1900	1841	1885	1856
Adj Flow Rate, veh/h	321	20	64	12	12	28	36	411	16	28	583	312
Peak Hour Factor	0.77	0.70	0.64	0.67	0.92	0.86	0.69	0.83	0.75	0.86	0.88	0.74
Percent Heavy Veh, %	2	7	10	0	9	4	0	1	0	4	1	3
Cap, veh/h	377	23	346	19	19	45	211	677	26	325	697	582
Arrive On Green	0.23	0.23	0.23	0.05	0.05	0.05	0.03	0.38	0.38	0.03	0.37	0.37
Sat Flow, veh/h	1615	101	1485	368	368	858	1810	1802	70	1753	1885	1572
Grp Volume(v), veh/h	341	0	64	52	0	0	36	0	427	28	583	312
Grp Sat Flow(s),veh/h/ln	1716	0	1485	1594	0	0	1810	0	1873	1753	1885	1572
Q Serve(g_s), s	14.7	0.0	2.7	2.5	0.0	0.0	0.9	0.0	14.3	0.8	21.9	12.1
Cycle Q Clear(g_c), s	14.7	0.0	2.7	2.5	0.0	0.0	0.9	0.0	14.3	0.8	21.9	12.1
Prop In Lane	0.94		1.00	0.23		0.54	1.00		0.04	1.00		1.00
Lane Grp Cap(c), veh/h	400	0	346	83	0	0	211	0	703	325	697	582
V/C Ratio(X)	0.85	0.00	0.18	0.63	0.00	0.00	0.17	0.00	0.61	0.09	0.84	0.54
Avail Cap(c_a), veh/h	531	0	460	123	0	0	265	0	1112	387	1119	934
HCM Platoon Ratio	1.00	1.00	1.00	1.00	1.00	1.00	1.00	1.00	1.00	1.00	1.00	1.00
Upstream Filter(I)	1.00	0.00	1.00	1.00	0.00	0.00	1.00	0.00	1.00	1.00	1.00	1.00
Uniform Delay (d), s/veh	28.4	0.0	23.8	36.0	0.0	0.0	17.3	0.0	19.6	15.5	22.3	19.2
Incr Delay (d2), s/veh	9.9	0.0	0.3	7.5	0.0	0.0	0.4	0.0	0.9	0.1	3.1	0.8
Initial Q Delay(d3),s/veh	0.0	0.0	0.0	0.0	0.0	0.0	0.0	0.0	0.0	0.0	0.0	0.0
%ile BackOfQ(50%),veh/ln	6.9	0.0	0.9	1.1	0.0	0.0	0.4	0.0	5.7	0.3	9.3	4.1
Unsig. Movement Delay, s/veh												
LnGrp Delay(d),s/veh	38.3	0.0	24.0	43.5	0.0	0.0	17.7	0.0	20.4	15.6	25.4	20.0
LnGrp LOS	D	A	C	D	A	A	B	A	C	B	C	B
Approach Vol, veh/h		405			52			463			923	
Approach Delay, s/veh		36.0			43.5			20.2			23.3	
Approach LOS		D			D			C			C	

Timer - Assigned Phs	1	2		4	5	6		8
Phs Duration (G+Y+Rc), s	8.3	35.1		10.0	8.7	34.7		24.1
Change Period (Y+Rc), s	6.0	6.0		6.0	6.0	6.0		6.0
Max Green Setting (Gmax), s	5.0	46.0		6.0	5.0	46.0		24.0
Max Q Clear Time (g_c+I1), s	2.8	16.3		4.5	2.9	23.9		16.7
Green Ext Time (p_c), s	0.0	2.6		0.0	0.0	4.8		1.3

Intersection Summary	
HCM 6th Ctrl Delay	25.9
HCM 6th LOS	C

Lane Group	EBT	WBT	WBR	NBT	SBT	SBR
Lane Group Flow (vph)	436	10	30	228	239	524
v/c Ratio	0.75	0.01	0.04	0.48	0.48	0.64
Control Delay	19.8	7.4	1.4	18.4	18.4	6.0
Queue Delay	0.0	0.0	0.0	0.0	0.0	0.0
Total Delay	19.8	7.4	1.4	18.4	18.4	6.0
Queue Length 50th (ft)	78	1	0	44	47	0
Queue Length 95th (ft)	32	4	2	91	115	50
Internal Link Dist (ft)	1458	1130		711	2455	
Turn Bay Length (ft)			85			135
Base Capacity (vph)	965	1371	1136	753	787	995
Starvation Cap Reductn	0	0	0	0	0	0
Spillback Cap Reductn	0	0	0	0	0	0
Storage Cap Reductn	0	0	0	0	0	0
Reduced v/c Ratio	0.45	0.01	0.03	0.30	0.30	0.53

Intersection Summary

Movement	EBL	EBT	EBR	WBL	WBT	WBR	NBL	NBT	NBR	SBL	SBT	SBR
Lane Configurations												
Traffic Volume (veh/h)	291	3	22	0	5	19	22	138	2	14	184	451
Future Volume (veh/h)	291	3	22	0	5	19	22	138	2	14	184	451
Initial Q (Qb), veh	0	0	0	0	0	0	0	0	0	0	0	0
Ped-Bike Adj(A_pbT)	1.00		1.00	1.00		1.00	1.00		1.00	1.00		1.00
Parking Bus, Adj	1.00	1.00	1.00	1.00	1.00	1.00	1.00	1.00	1.00	1.00	1.00	1.00
Work Zone On Approach		No			No			No			No	
Adj Sat Flow, veh/h/ln	1841	1900	1752	1900	1900	1841	1841	1870	1900	1900	1885	1885
Adj Flow Rate, veh/h	393	12	31	0	10	30	28	192	8	20	219	524
Peak Hour Factor	0.74	0.25	0.71	0.92	0.50	0.64	0.78	0.72	0.25	0.70	0.84	0.86
Percent Heavy Veh, %	4	0	10	0	0	4	4	2	0	0	1	1
Cap, veh/h	621	14	37	0	712	585	121	571	22	106	655	585
Arrive On Green	0.37	0.37	0.37	0.00	0.37	0.37	0.37	0.37	0.37	0.37	0.37	0.37
Sat Flow, veh/h	1263	39	100	0	1900	1560	92	1560	60	60	1790	1598
Grp Volume(v), veh/h	436	0	0	0	10	30	228	0	0	239	0	524
Grp Sat Flow(s),veh/h/ln	1401	0	0	0	1900	1560	1712	0	0	1850	0	1598
Q Serve(g_s), s	13.0	0.0	0.0	0.0	0.2	0.6	0.0	0.0	0.0	0.0	0.0	14.3
Cycle Q Clear(g_c), s	13.1	0.0	0.0	0.0	0.2	0.6	4.1	0.0	0.0	4.3	0.0	14.3
Prop In Lane	0.90		0.07	0.00		1.00	0.12		0.04	0.08		1.00
Lane Grp Cap(c), veh/h	673	0	0	0	712	585	714	0	0	761	0	585
V/C Ratio(X)	0.65	0.00	0.00	0.00	0.01	0.05	0.32	0.00	0.00	0.31	0.00	0.90
Avail Cap(c_a), veh/h	1059	0	0	0	1231	1011	749	0	0	802	0	621
HCM Platoon Ratio	1.00	1.00	1.00	1.00	1.00	1.00	1.00	1.00	1.00	1.00	1.00	1.00
Upstream Filter(I)	1.00	0.00	0.00	0.00	1.00	1.00	1.00	0.00	0.00	1.00	0.00	1.00
Uniform Delay (d), s/veh	13.2	0.0	0.0	0.0	9.1	9.2	10.6	0.0	0.0	10.7	0.0	13.8
Incr Delay (d2), s/veh	1.1	0.0	0.0	0.0	0.0	0.0	0.3	0.0	0.0	0.2	0.0	15.1
Initial Q Delay(d3),s/veh	0.0	0.0	0.0	0.0	0.0	0.0	0.0	0.0	0.0	0.0	0.0	0.0
%ile BackOfQ(50%),veh/ln	3.2	0.0	0.0	0.0	0.1	0.2	1.2	0.0	0.0	1.2	0.0	5.9
Unsig. Movement Delay, s/veh												
LnGrp Delay(d),s/veh	14.3	0.0	0.0	0.0	9.1	9.3	10.9	0.0	0.0	10.9	0.0	29.0
LnGrp LOS	B	A	A	A	A	A	B	A	A	B	A	C
Approach Vol, veh/h		436			40			228			763	
Approach Delay, s/veh		14.3			9.2			10.9			23.3	
Approach LOS		B			A			B			C	

Timer - Assigned Phs	2	4	6	8
Phs Duration (G+Y+Rc), s	22.9	23.4	22.9	23.4
Change Period (Y+Rc), s	6.0	6.0	6.0	6.0
Max Green Setting (Gmax), s	18.0	30.0	18.0	30.0
Max Q Clear Time (g_c+I1), s	6.1	15.1	16.3	2.6
Green Ext Time (p_c), s	0.9	2.3	0.6	0.1

Intersection Summary	
HCM 6th Ctrl Delay	18.3
HCM 6th LOS	B

Intersection	
Int Delay, s/veh	1.7

Movement	EBL	EBT	EBR	WBL	WBT	WBR	NBL	NBT	NBR	SBL	SBT	SBR
Lane Configurations												
Traffic Vol, veh/h	9	157	2	1	265	35	2	12	0	28	16	6
Future Vol, veh/h	9	157	2	1	265	35	2	12	0	28	16	6
Conflicting Peds, #/hr	0	0	0	0	0	0	0	0	0	0	0	0
Sign Control	Free	Free	Free	Free	Free	Free	Stop	Stop	Stop	Stop	Stop	Stop
RT Channelized	-	-	None	-	-	None	-	-	None	-	-	None
Storage Length	-	-	-	-	-	-	-	-	-	-	-	-
Veh in Median Storage, #	-	0	-	-	0	-	-	0	-	-	0	-
Grade, %	-	0	-	-	0	-	-	0	-	-	0	-
Peak Hour Factor	92	92	92	92	92	92	92	92	92	92	92	92
Heavy Vehicles, %	2	2	2	2	2	2	2	2	2	2	2	2
Mvmt Flow	10	171	2	1	288	38	2	13	0	30	17	7

Major/Minor	Major1			Major2			Minor1			Minor2		
Conflicting Flow All	326	0	0	173	0	0	513	520	172	508	502	307
Stage 1	-	-	-	-	-	-	192	192	-	309	309	-
Stage 2	-	-	-	-	-	-	321	328	-	199	193	-
Critical Hdwy	4.12	-	-	4.12	-	-	7.12	6.52	6.22	7.12	6.52	6.22
Critical Hdwy Stg 1	-	-	-	-	-	-	6.12	5.52	-	6.12	5.52	-
Critical Hdwy Stg 2	-	-	-	-	-	-	6.12	5.52	-	6.12	5.52	-
Follow-up Hdwy	2.218	-	-	2.218	-	-	3.518	4.018	3.318	3.518	4.018	3.318
Pot Cap-1 Maneuver	1234	-	-	1404	-	-	472	461	872	475	471	733
Stage 1	-	-	-	-	-	-	810	742	-	701	660	-
Stage 2	-	-	-	-	-	-	691	647	-	803	741	-
Platoon blocked, %		-	-		-	-						
Mov Cap-1 Maneuver	1234	-	-	1404	-	-	451	456	872	461	466	733
Mov Cap-2 Maneuver	-	-	-	-	-	-	451	456	-	461	466	-
Stage 1	-	-	-	-	-	-	803	735	-	695	659	-
Stage 2	-	-	-	-	-	-	666	646	-	782	734	-

Approach	EB	WB	NB	SB
HCM Control Delay, s	0.4	0	13.2	13.4
HCM LOS			B	B

Minor Lane/Major Mvmt	NBLn1	EBL	EBT	EBR	WBL	WBT	WBR	SBLn1
Capacity (veh/h)	455	1234	-	-	1404	-	-	484
HCM Lane V/C Ratio	0.033	0.008	-	-	0.001	-	-	0.112
HCM Control Delay (s)	13.2	7.9	0	-	7.6	0	-	13.4
HCM Lane LOS	B	A	A	-	A	A	-	B
HCM 95th %tile Q(veh)	0.1	0	-	-	0	-	-	0.4

APPENDIX C.2

INTERSECTION ANALYSES

NO BUILD SCENARIO

Lane Group	EBT	EBR	WBT	NBL	NBT	SBL	SBT	SBR
Lane Group Flow (vph)	373	64	70	35	1079	18	619	165
v/c Ratio	1.06	0.15	0.49	0.11	1.10	0.11	0.66	0.19
Control Delay	105.6	0.7	36.2	10.2	83.4	10.8	23.2	2.9
Queue Delay	0.0	0.0	0.0	0.0	0.0	0.0	0.0	0.0
Total Delay	105.6	0.7	36.2	10.2	83.4	10.8	23.2	2.9
Queue Length 50th (ft)	~244	0	17	9	~727	5	311	0
Queue Length 95th (ft)	#443	0	59	21	#1045	13	403	29
Internal Link Dist (ft)	425		298		1363		345	
Turn Bay Length (ft)				105		190		180
Base Capacity (vph)	351	437	144	323	985	163	988	916
Starvation Cap Reductn	0	0	0	0	0	0	0	0
Spillback Cap Reductn	0	0	0	0	0	0	0	0
Storage Cap Reductn	0	0	0	0	0	0	0	0
Reduced v/c Ratio	1.06	0.15	0.49	0.11	1.10	0.11	0.63	0.18

Intersection Summary

~ Volume exceeds capacity, queue is theoretically infinite.
Queue shown is maximum after two cycles.

95th percentile volume exceeds capacity, queue may be longer.
Queue shown is maximum after two cycles.

Movement	EBL	EBT	EBR	WBL	WBT	WBR	NBL	NBT	NBR	SBL	SBT	SBR
Lane Configurations												
Traffic Volume (veh/h)	306	11	54	19	6	35	30	895	22	15	526	140
Future Volume (veh/h)	306	11	54	19	6	35	30	895	22	15	526	140
Initial Q (Qb), veh	0	0	0	0	0	0	0	0	0	0	0	0
Ped-Bike Adj(A_pbT)	1.00		1.00	1.00		1.00	1.00		1.00	1.00		1.00
Parking Bus, Adj	1.00	1.00	1.00	1.00	1.00	1.00	1.00	1.00	1.00	1.00	1.00	1.00
Work Zone On Approach		No			No			No			No	
Adj Sat Flow, veh/h/ln	1856	1856	1856	1856	1856	1856	1856	1856	1856	1856	1856	1856
Adj Flow Rate, veh/h	360	13	64	22	7	41	35	1053	26	18	619	165
Peak Hour Factor	0.85	0.85	0.85	0.85	0.85	0.85	0.85	0.85	0.85	0.85	0.85	0.85
Percent Heavy Veh, %	3	3	3	3	3	3	3	3	3	3	3	3
Cap, veh/h	320	12	295	28	9	51	288	907	22	106	913	773
Arrive On Green	0.19	0.19	0.19	0.05	0.05	0.05	0.03	0.50	0.50	0.02	0.49	0.49
Sat Flow, veh/h	1708	62	1572	520	166	969	1767	1803	45	1767	1856	1572
Grp Volume(v), veh/h	373	0	64	70	0	0	35	0	1079	18	619	165
Grp Sat Flow(s),veh/h/ln	1770	0	1572	1655	0	0	1767	0	1848	1767	1856	1572
Q Serve(g_s), s	19.0	0.0	3.5	4.2	0.0	0.0	1.0	0.0	51.0	0.5	25.8	6.0
Cycle Q Clear(g_c), s	19.0	0.0	3.5	4.2	0.0	0.0	1.0	0.0	51.0	0.5	25.8	6.0
Prop In Lane	0.97		1.00	0.31		0.59	1.00		0.02	1.00		1.00
Lane Grp Cap(c), veh/h	332	0	295	88	0	0	288	0	930	106	913	773
V/C Ratio(X)	1.12	0.00	0.22	0.80	0.00	0.00	0.12	0.00	1.16	0.17	0.68	0.21
Avail Cap(c_a), veh/h	332	0	295	98	0	0	321	0	930	158	934	791
HCM Platoon Ratio	1.00	1.00	1.00	1.00	1.00	1.00	1.00	1.00	1.00	1.00	1.00	1.00
Upstream Filter(I)	1.00	0.00	1.00	1.00	0.00	0.00	1.00	0.00	1.00	1.00	1.00	1.00
Uniform Delay (d), s/veh	41.2	0.0	34.9	47.5	0.0	0.0	15.2	0.0	25.2	24.5	19.6	14.6
Incr Delay (d2), s/veh	87.3	0.0	0.4	32.9	0.0	0.0	0.2	0.0	84.3	0.8	1.9	0.1
Initial Q Delay(d3),s/veh	0.0	0.0	0.0	0.0	0.0	0.0	0.0	0.0	0.0	0.0	0.0	0.0
%ile BackOfQ(50%),veh/ln	16.2	0.0	1.4	2.5	0.0	0.0	0.4	0.0	41.7	0.2	10.7	2.1
Unsig. Movement Delay, s/veh												
LnGrp Delay(d),s/veh	128.5	0.0	35.2	80.4	0.0	0.0	15.4	0.0	109.5	25.2	21.6	14.8
LnGrp LOS	F	A	D	F	A	A	B	A	F	C	C	B
Approach Vol, veh/h		437			70			1114			802	
Approach Delay, s/veh		114.8			80.4			106.5			20.3	
Approach LOS		F			F			F			C	

Timer - Assigned Phs	1	2		4	5	6		8
Phs Duration (G+Y+Rc), s	8.0	57.0		11.4	9.1	55.9		25.0
Change Period (Y+Rc), s	6.0	6.0		6.0	6.0	6.0		6.0
Max Green Setting (Gmax), s	5.0	51.0		6.0	5.0	51.0		19.0
Max Q Clear Time (g_c+I1), s	2.5	53.0		6.2	3.0	27.8		21.0
Green Ext Time (p_c), s	0.0	0.0		0.0	0.0	4.6		0.0

Intersection Summary	
HCM 6th Ctrl Delay	78.7
HCM 6th LOS	E

Lane Group	EBT	WBT	WBR	NBT	SBT	SBR
Lane Group Flow (vph)	515	52	151	259	254	212
v/c Ratio	0.84	0.08	0.18	0.51	0.64	0.36
Control Delay	28.2	8.7	2.6	19.5	24.7	4.6
Queue Delay	0.0	0.0	0.0	0.0	0.0	0.0
Total Delay	28.2	8.7	2.6	19.5	24.7	4.6
Queue Length 50th (ft)	123	8	0	70	73	0
Queue Length 95th (ft)	#329	26	25	127	137	38
Internal Link Dist (ft)	1458	1130		711	2455	
Turn Bay Length (ft)			85			135
Base Capacity (vph)	753	799	997	746	583	772
Starvation Cap Reductn	0	0	0	0	0	0
Spillback Cap Reductn	0	0	0	0	0	0
Storage Cap Reductn	0	0	0	0	0	0
Reduced v/c Ratio	0.68	0.07	0.15	0.35	0.44	0.27

Intersection Summary

95th percentile volume exceeds capacity, queue may be longer.
Queue shown is maximum after two cycles.

Movement	EBL	EBT	EBR	WBL	WBT	WBR	NBL	NBT	NBR	SBL	SBT	SBR
Lane Configurations												
Traffic Volume (veh/h)	457	13	14	27	22	142	17	215	11	93	146	199
Future Volume (veh/h)	457	13	14	27	22	142	17	215	11	93	146	199
Initial Q (Qb), veh	0	0	0	0	0	0	0	0	0	0	0	0
Ped-Bike Adj(A_pbT)	1.00		1.00	1.00		1.00	1.00		1.00	1.00		1.00
Parking Bus, Adj	1.00	1.00	1.00	1.00	1.00	1.00	1.00	1.00	1.00	1.00	1.00	1.00
Work Zone On Approach		No			No			No			No	
Adj Sat Flow, veh/h/ln	1885	1411	1900	1900	1900	1900	1900	1885	1900	1811	1856	1856
Adj Flow Rate, veh/h	486	14	15	29	23	151	18	229	12	99	155	212
Peak Hour Factor	0.94	0.94	0.94	0.94	0.94	0.94	0.94	0.94	0.94	0.94	0.94	0.94
Percent Heavy Veh, %	1	33	0	0	0	0	0	1	0	6	3	3
Cap, veh/h	597	13	14	631	473	870	83	318	16	202	230	359
Arrive On Green	0.54	0.54	0.54	0.54	0.54	0.54	0.23	0.23	0.23	0.23	0.23	0.23
Sat Flow, veh/h	855	25	26	967	875	1610	36	1392	69	462	1005	1572
Grp Volume(v), veh/h	515	0	0	52	0	151	259	0	0	254	0	212
Grp Sat Flow(s),veh/h/ln	906	0	0	1842	0	1610	1497	0	0	1467	0	1572
Q Serve(g_s), s	27.3	0.0	0.0	0.0	0.0	2.5	0.6	0.0	0.0	0.0	0.0	6.2
Cycle Q Clear(g_c), s	28.0	0.0	0.0	0.7	0.0	2.5	9.0	0.0	0.0	8.4	0.0	6.2
Prop In Lane	0.94		0.03	0.56		1.00	0.07		0.05	0.39		1.00
Lane Grp Cap(c), veh/h	624	0	0	1103	0	870	416	0	0	432	0	359
V/C Ratio(X)	0.82	0.00	0.00	0.05	0.00	0.17	0.62	0.00	0.00	0.59	0.00	0.59
Avail Cap(c_a), veh/h	624	0	0	1103	0	870	694	0	0	665	0	607
HCM Platoon Ratio	1.00	1.00	1.00	1.00	1.00	1.00	1.00	1.00	1.00	1.00	1.00	1.00
Upstream Filter(I)	1.00	0.00	0.00	1.00	0.00	1.00	1.00	0.00	0.00	1.00	0.00	1.00
Uniform Delay (d), s/veh	12.9	0.0	0.0	5.6	0.0	6.1	18.0	0.0	0.0	18.4	0.0	17.8
Incr Delay (d2), s/veh	8.8	0.0	0.0	0.0	0.0	0.1	1.5	0.0	0.0	1.3	0.0	1.5
Initial Q Delay(d3),s/veh	0.0	0.0	0.0	0.0	0.0	0.0	0.0	0.0	0.0	0.0	0.0	0.0
%ile BackOfQ(50%),veh/ln	5.6	0.0	0.0	0.2	0.0	0.6	2.4	0.0	0.0	2.4	0.0	1.9
Unsig. Movement Delay, s/veh												
LnGrp Delay(d),s/veh	21.8	0.0	0.0	5.7	0.0	6.1	19.6	0.0	0.0	19.7	0.0	19.4
LnGrp LOS	C	A	A	A	A	A	B	A	A	B	A	B
Approach Vol, veh/h		515			203			259			466	
Approach Delay, s/veh		21.8			6.0			19.6			19.6	
Approach LOS		C			A			B			B	

Timer - Assigned Phs		2		4		6		8				
Phs Duration (G+Y+Rc), s		17.8		34.0		17.8		34.0				
Change Period (Y+Rc), s		6.0		6.0		6.0		6.0				
Max Green Setting (Gmax), s		20.0		28.0		20.0		28.0				
Max Q Clear Time (g_c+I1), s		11.0		30.0		10.4		4.5				
Green Ext Time (p_c), s		0.8		0.0		1.5		0.7				

Intersection Summary	
HCM 6th Ctrl Delay	18.4
HCM 6th LOS	B

Intersection	
Int Delay, s/veh	2

Movement	EBL	EBT	EBR	WBL	WBT	WBR	NBL	NBT	NBR	SBL	SBT	SBR
Lane Configurations												
Traffic Vol, veh/h	17	313	0	0	171	35	1	11	1	46	10	6
Future Vol, veh/h	17	313	0	0	171	35	1	11	1	46	10	6
Conflicting Peds, #/hr	0	0	0	0	0	0	0	0	0	0	0	0
Sign Control	Free	Free	Free	Free	Free	Free	Stop	Stop	Stop	Stop	Stop	Stop
RT Channelized	-	-	None	-	-	None	-	-	None	-	-	None
Storage Length	-	-	-	-	-	-	-	-	-	-	-	-
Veh in Median Storage, #	-	0	-	-	0	-	-	0	-	-	0	-
Grade, %	-	0	-	-	0	-	-	0	-	-	0	-
Peak Hour Factor	92	92	92	92	92	92	92	92	92	92	92	92
Heavy Vehicles, %	2	2	2	2	2	2	2	2	2	2	2	2
Mvmt Flow	18	340	0	0	186	38	1	12	1	50	11	7

Major/Minor	Major1			Major2			Minor1			Minor2		
Conflicting Flow All	224	0	0	340	0	0	590	600	340	588	581	205
Stage 1	-	-	-	-	-	-	376	376	-	205	205	-
Stage 2	-	-	-	-	-	-	214	224	-	383	376	-
Critical Hdwy	4.12	-	-	4.12	-	-	7.12	6.52	6.22	7.12	6.52	6.22
Critical Hdwy Stg 1	-	-	-	-	-	-	6.12	5.52	-	6.12	5.52	-
Critical Hdwy Stg 2	-	-	-	-	-	-	6.12	5.52	-	6.12	5.52	-
Follow-up Hdwy	2.218	-	-	2.218	-	-	3.518	4.018	3.318	3.518	4.018	3.318
Pot Cap-1 Maneuver	1345	-	-	1219	-	-	419	415	702	421	425	836
Stage 1	-	-	-	-	-	-	645	616	-	797	732	-
Stage 2	-	-	-	-	-	-	788	718	-	640	616	-
Platoon blocked, %		-	-		-	-						
Mov Cap-1 Maneuver	1345	-	-	1219	-	-	402	408	702	406	418	836
Mov Cap-2 Maneuver	-	-	-	-	-	-	402	408	-	406	418	-
Stage 1	-	-	-	-	-	-	634	606	-	783	732	-
Stage 2	-	-	-	-	-	-	770	718	-	616	606	-

Approach	EB	WB	NB	SB
HCM Control Delay, s	0.4	0	13.8	14.9
HCM LOS			B	B

Minor Lane/Major Mvmt	NBLn1	EBL	EBT	EBR	WBL	WBT	WBR	SBLn1
Capacity (veh/h)	421	1345	-	-	1219	-	-	429
HCM Lane V/C Ratio	0.034	0.014	-	-	-	-	-	0.157
HCM Control Delay (s)	13.8	7.7	0	-	0	-	-	14.9
HCM Lane LOS	B	A	A	-	A	-	-	B
HCM 95th %tile Q(veh)	0.1	0	-	-	0	-	-	0.6

Lane Group	EBT	EBR	WBT	NBL	NBT	SBL	SBT	SBR
Lane Group Flow (vph)	320	65	61	39	694	29	1027	282
v/c Ratio	0.98	0.16	0.46	0.24	0.71	0.10	1.04	0.30
Control Delay	88.7	0.8	41.1	12.6	24.0	9.6	66.1	5.4
Queue Delay	0.0	0.0	0.0	0.0	0.0	0.0	0.0	0.0
Total Delay	88.7	0.8	41.1	12.6	24.0	9.6	66.1	5.4
Queue Length 50th (ft)	~237	0	21	10	363	7	~800	26
Queue Length 95th (ft)	#375	0	59	22	467	18	#953	63
Internal Link Dist (ft)	425		298		1363		345	
Turn Bay Length (ft)				105		190		180
Base Capacity (vph)	326	417	132	161	982	287	986	934
Starvation Cap Reductn	0	0	0	0	0	0	0	0
Spillback Cap Reductn	0	0	0	0	0	0	0	0
Storage Cap Reductn	0	0	0	0	0	0	0	0
Reduced v/c Ratio	0.98	0.16	0.46	0.24	0.71	0.10	1.04	0.30

Intersection Summary

~ Volume exceeds capacity, queue is theoretically infinite.
Queue shown is maximum after two cycles.

95th percentile volume exceeds capacity, queue may be longer.
Queue shown is maximum after two cycles.

Movement	EBL	EBT	EBR	WBL	WBT	WBR	NBL	NBT	NBR	SBL	SBT	SBR
Lane Configurations												
Traffic Volume (veh/h)	257	15	55	16	11	25	33	573	17	25	873	240
Future Volume (veh/h)	257	15	55	16	11	25	33	573	17	25	873	240
Initial Q (Qb), veh	0	0	0	0	0	0	0	0	0	0	0	0
Ped-Bike Adj(A_pbT)	1.00		1.00	1.00		1.00	1.00		1.00	1.00		1.00
Parking Bus, Adj	1.00	1.00	1.00	1.00	1.00	1.00	1.00	1.00	1.00	1.00	1.00	1.00
Work Zone On Approach		No			No			No			No	
Adj Sat Flow, veh/h/ln	1856	1856	1856	1856	1856	1856	1856	1856	1856	1856	1856	1856
Adj Flow Rate, veh/h	302	18	65	19	13	29	39	674	20	29	1027	282
Peak Hour Factor	0.85	0.85	0.85	0.85	0.85	0.85	0.85	0.85	0.85	0.85	0.85	0.85
Percent Heavy Veh, %	3	3	3	3	3	3	3	3	3	3	3	3
Cap, veh/h	294	18	277	25	17	39	128	921	27	283	943	799
Arrive On Green	0.18	0.18	0.18	0.05	0.05	0.05	0.03	0.51	0.51	0.03	0.51	0.51
Sat Flow, veh/h	1672	100	1572	525	359	801	1767	1793	53	1767	1856	1572
Grp Volume(v), veh/h	320	0	65	61	0	0	39	0	694	29	1027	282
Grp Sat Flow(s),veh/h/ln	1772	0	1572	1685	0	0	1767	0	1846	1767	1856	1572
Q Serve(g_s), s	18.0	0.0	3.6	3.7	0.0	0.0	1.1	0.0	30.0	0.8	52.0	11.0
Cycle Q Clear(g_c), s	18.0	0.0	3.6	3.7	0.0	0.0	1.1	0.0	30.0	0.8	52.0	11.0
Prop In Lane	0.94		1.00	0.31		0.48	1.00		0.03	1.00		1.00
Lane Grp Cap(c), veh/h	312	0	277	81	0	0	128	0	948	283	943	799
V/C Ratio(X)	1.03	0.00	0.23	0.75	0.00	0.00	0.30	0.00	0.73	0.10	1.09	0.35
Avail Cap(c_a), veh/h	312	0	277	99	0	0	157	0	948	321	943	799
HCM Platoon Ratio	1.00	1.00	1.00	1.00	1.00	1.00	1.00	1.00	1.00	1.00	1.00	1.00
Upstream Filter(I)	1.00	0.00	1.00	1.00	0.00	0.00	1.00	0.00	1.00	1.00	1.00	1.00
Uniform Delay (d), s/veh	42.1	0.0	36.2	48.1	0.0	0.0	24.2	0.0	19.4	15.6	25.1	15.1
Incr Delay (d2), s/veh	57.9	0.0	0.4	22.1	0.0	0.0	1.3	0.0	2.9	0.2	56.5	0.3
Initial Q Delay(d3),s/veh	0.0	0.0	0.0	0.0	0.0	0.0	0.0	0.0	0.0	0.0	0.0	0.0
%ile BackOfQ(50%),veh/ln	12.8	0.0	1.4	2.0	0.0	0.0	0.5	0.0	12.4	0.3	35.2	3.7
Unsig. Movement Delay, s/veh												
LnGrp Delay(d),s/veh	100.0	0.0	36.7	70.2	0.0	0.0	25.6	0.0	22.3	15.8	81.6	15.3
LnGrp LOS	F	A	D	E	A	A	C	A	C	B	F	B
Approach Vol, veh/h		385			61			733			1338	
Approach Delay, s/veh		89.3			70.2			22.5			66.2	
Approach LOS		F			E			C			E	

Timer - Assigned Phs	1	2		4	5	6		8
Phs Duration (G+Y+Rc), s	8.8	58.5		10.9	9.3	58.0		24.0
Change Period (Y+Rc), s	6.0	6.0		6.0	6.0	6.0		6.0
Max Green Setting (Gmax), s	5.0	52.0		6.0	5.0	52.0		18.0
Max Q Clear Time (g_c+I1), s	2.8	32.0		5.7	3.1	54.0		20.0
Green Ext Time (p_c), s	0.0	4.5		0.0	0.0	0.0		0.0

Intersection Summary	
HCM 6th Ctrl Delay	57.1
HCM 6th LOS	E

Lane Group	EBT	WBT	WBR	NBT	SBT	SBR
Lane Group Flow (vph)	376	45	156	262	445	499
v/c Ratio	0.82	0.09	0.24	0.36	0.79	0.53
Control Delay	33.8	13.4	4.0	11.6	25.6	3.5
Queue Delay	0.0	0.0	0.0	0.0	0.0	0.0
Total Delay	33.8	13.4	4.0	11.6	25.6	3.5
Queue Length 50th (ft)	114	10	0	54	124	0
Queue Length 95th (ft)	#257	29	32	99	#262	45
Internal Link Dist (ft)	1458	1130		711	2455	
Turn Bay Length (ft)			85			135
Base Capacity (vph)	552	635	762	937	728	1071
Starvation Cap Reductn	0	0	0	0	0	0
Spillback Cap Reductn	0	0	0	0	0	0
Storage Cap Reductn	0	0	0	0	0	0
Reduced v/c Ratio	0.68	0.07	0.20	0.28	0.61	0.47

Intersection Summary

95th percentile volume exceeds capacity, queue may be longer.
Queue shown is maximum after two cycles.

Movement	EBL	EBT	EBR	WBL	WBT	WBR	NBL	NBT	NBR	SBL	SBT	SBR
Lane Configurations												
Traffic Volume (veh/h)	303	28	23	18	24	147	23	191	33	200	218	469
Future Volume (veh/h)	303	28	23	18	24	147	23	191	33	200	218	469
Initial Q (Qb), veh	0	0	0	0	0	0	0	0	0	0	0	0
Ped-Bike Adj(A_pbT)	1.00		1.00	1.00		1.00	1.00		1.00	1.00		1.00
Parking Bus, Adj	1.00	1.00	1.00	1.00	1.00	1.00	1.00	1.00	1.00	1.00	1.00	1.00
Work Zone On Approach		No			No			No			No	
Adj Sat Flow, veh/h/ln	1885	1411	1900	1900	1900	1900	1900	1885	1900	1811	1856	1856
Adj Flow Rate, veh/h	322	30	24	19	26	156	24	203	35	213	232	499
Peak Hour Factor	0.94	0.94	0.94	0.94	0.94	0.94	0.94	0.94	0.94	0.94	0.94	0.94
Percent Heavy Veh, %	1	33	0	0	0	0	0	1	0	6	3	3
Cap, veh/h	383	25	20	313	399	564	65	383	59	211	165	708
Arrive On Green	0.35	0.35	0.35	0.35	0.35	0.35	0.45	0.45	0.45	0.45	0.45	0.45
Sat Flow, veh/h	776	72	58	652	1139	1610	0	851	131	273	368	1572
Grp Volume(v), veh/h	376	0	0	45	0	156	262	0	0	445	0	499
Grp Sat Flow(s),veh/h/ln	906	0	0	1791	0	1610	983	0	0	640	0	1572
Q Serve(g_s), s	20.1	0.0	0.0	0.0	0.0	4.2	0.0	0.0	0.0	0.0	0.0	15.3
Cycle Q Clear(g_c), s	21.0	0.0	0.0	0.9	0.0	4.2	27.0	0.0	0.0	27.0	0.0	15.3
Prop In Lane	0.86		0.06	0.42		1.00	0.09		0.13	0.48		1.00
Lane Grp Cap(c), veh/h	428	0	0	712	0	564	508	0	0	377	0	708
V/C Ratio(X)	0.88	0.00	0.00	0.06	0.00	0.28	0.52	0.00	0.00	1.18	0.00	0.71
Avail Cap(c_a), veh/h	428	0	0	712	0	564	508	0	0	377	0	708
HCM Platoon Ratio	1.00	1.00	1.00	1.00	1.00	1.00	1.00	1.00	1.00	1.00	1.00	1.00
Upstream Filter(I)	1.00	0.00	0.00	1.00	0.00	1.00	1.00	0.00	0.00	1.00	0.00	1.00
Uniform Delay (d), s/veh	21.5	0.0	0.0	13.0	0.0	14.0	11.9	0.0	0.0	18.9	0.0	13.3
Incr Delay (d2), s/veh	18.3	0.0	0.0	0.0	0.0	0.3	0.9	0.0	0.0	105.5	0.0	3.2
Initial Q Delay(d3),s/veh	0.0	0.0	0.0	0.0	0.0	0.0	0.0	0.0	0.0	0.0	0.0	0.0
%ile BackOfQ(50%),veh/ln	7.0	0.0	0.0	0.4	0.0	1.4	1.8	0.0	0.0	15.9	0.0	4.6
Unsig. Movement Delay, s/veh												
LnGrp Delay(d),s/veh	39.8	0.0	0.0	13.0	0.0	14.3	12.8	0.0	0.0	124.4	0.0	16.5
LnGrp LOS	D	A	A	B	A	B	B	A	A	F	A	B
Approach Vol, veh/h		376			201			262			944	
Approach Delay, s/veh		39.8			14.0			12.8			67.4	
Approach LOS		D			B			B			E	

Timer - Assigned Phs	2	4	6	8
Phs Duration (G+Y+Rc), s	33.0	27.0	33.0	27.0
Change Period (Y+Rc), s	6.0	6.0	6.0	6.0
Max Green Setting (Gmax), s	27.0	21.0	27.0	21.0
Max Q Clear Time (g_c+I1), s	29.0	23.0	29.0	6.2
Green Ext Time (p_c), s	0.0	0.0	0.0	0.6

Intersection Summary	
HCM 6th Ctrl Delay	47.5
HCM 6th LOS	D

Intersection	
Int Delay, s/veh	1.7

Movement	EBL	EBT	EBR	WBL	WBT	WBR	NBL	NBT	NBR	SBL	SBT	SBR
Lane Configurations												
Traffic Vol, veh/h	9	188	2	1	295	36	2	12	0	29	17	6
Future Vol, veh/h	9	188	2	1	295	36	2	12	0	29	17	6
Conflicting Peds, #/hr	0	0	0	0	0	0	0	0	0	0	0	0
Sign Control	Free	Free	Free	Free	Free	Free	Stop	Stop	Stop	Stop	Stop	Stop
RT Channelized	-	-	None	-	-	None	-	-	None	-	-	None
Storage Length	-	-	-	-	-	-	-	-	-	-	-	-
Veh in Median Storage, #	-	0	-	-	0	-	-	0	-	-	0	-
Grade, %	-	0	-	-	0	-	-	0	-	-	0	-
Peak Hour Factor	92	92	92	92	92	92	92	92	92	92	92	92
Heavy Vehicles, %	2	2	2	2	2	2	2	2	2	2	2	2
Mvmt Flow	10	204	2	1	321	39	2	13	0	32	18	7

Major/Minor	Major1			Major2			Minor1			Minor2		
Conflicting Flow All	360	0	0	206	0	0	580	587	205	575	569	341
Stage 1	-	-	-	-	-	-	225	225	-	343	343	-
Stage 2	-	-	-	-	-	-	355	362	-	232	226	-
Critical Hdwy	4.12	-	-	4.12	-	-	7.12	6.52	6.22	7.12	6.52	6.22
Critical Hdwy Stg 1	-	-	-	-	-	-	6.12	5.52	-	6.12	5.52	-
Critical Hdwy Stg 2	-	-	-	-	-	-	6.12	5.52	-	6.12	5.52	-
Follow-up Hdwy	2.218	-	-	2.218	-	-	3.518	4.018	3.318	3.518	4.018	3.318
Pot Cap-1 Maneuver	1199	-	-	1365	-	-	426	422	836	429	432	701
Stage 1	-	-	-	-	-	-	778	718	-	672	637	-
Stage 2	-	-	-	-	-	-	662	625	-	771	717	-
Platoon blocked, %		-	-		-	-						
Mov Cap-1 Maneuver	1199	-	-	1365	-	-	405	418	836	416	428	701
Mov Cap-2 Maneuver	-	-	-	-	-	-	405	418	-	416	428	-
Stage 1	-	-	-	-	-	-	771	712	-	666	636	-
Stage 2	-	-	-	-	-	-	636	624	-	750	711	-

Approach	EB	WB	NB	SB
HCM Control Delay, s	0.4	0	14	14.4
HCM LOS			B	B

Minor Lane/Major Mvmt	NBLn1	EBL	EBT	EBR	WBL	WBT	WBR	SBLn1
Capacity (veh/h)	416	1199	-	-	1365	-	-	441
HCM Lane V/C Ratio	0.037	0.008	-	-	0.001	-	-	0.128
HCM Control Delay (s)	14	8	0	-	7.6	0	-	14.4
HCM Lane LOS	B	A	A	-	A	A	-	B
HCM 95th %tile Q(veh)	0.1	0	-	-	0	-	-	0.4

APPENDIX C.3

INTERSECTION ANALYSES

BUILD SCENARIO

Queues
1: Lohman Ford Rd & Dawn Dr

12/26/2023

Lane Group	EBT	EBR	WBT	NBL	NBT	SBL	SBT	SBR
Lane Group Flow (vph)	373	64	70	35	1115	18	666	165
v/c Ratio	1.06	0.15	0.49	0.12	1.13	0.11	0.70	0.19
Control Delay	105.6	0.7	36.2	10.4	96.7	10.8	24.9	2.9
Queue Delay	0.0	0.0	0.0	0.0	0.0	0.0	0.0	0.0
Total Delay	105.6	0.7	36.2	10.4	96.7	10.8	24.9	2.9
Queue Length 50th (ft)	~244	0	17	9	~773	5	348	0
Queue Length 95th (ft)	#443	0	59	21	#1094	13	449	29
Internal Link Dist (ft)	425		298		1363		345	
Turn Bay Length (ft)				105		190		180
Base Capacity (vph)	351	437	144	290	986	163	988	916
Starvation Cap Reductn	0	0	0	0	0	0	0	0
Spillback Cap Reductn	0	0	0	0	0	0	0	0
Storage Cap Reductn	0	0	0	0	0	0	0	0
Reduced v/c Ratio	1.06	0.15	0.49	0.12	1.13	0.11	0.67	0.18

Intersection Summary

~ Volume exceeds capacity, queue is theoretically infinite.
Queue shown is maximum after two cycles.

95th percentile volume exceeds capacity, queue may be longer.
Queue shown is maximum after two cycles.

Movement	EBL	EBT	EBR	WBL	WBT	WBR	NBL	NBT	NBR	SBL	SBT	SBR
Lane Configurations												
Traffic Volume (veh/h)	306	11	54	19	6	35	30	926	22	15	566	140
Future Volume (veh/h)	306	11	54	19	6	35	30	926	22	15	566	140
Initial Q (Qb), veh	0	0	0	0	0	0	0	0	0	0	0	0
Ped-Bike Adj(A_pbT)	1.00		1.00	1.00		1.00	1.00		1.00	1.00		1.00
Parking Bus, Adj	1.00	1.00	1.00	1.00	1.00	1.00	1.00	1.00	1.00	1.00	1.00	1.00
Work Zone On Approach		No			No			No			No	
Adj Sat Flow, veh/h/ln	1856	1856	1856	1856	1856	1856	1856	1856	1856	1856	1856	1856
Adj Flow Rate, veh/h	360	13	64	22	7	41	35	1089	26	18	666	165
Peak Hour Factor	0.85	0.85	0.85	0.85	0.85	0.85	0.85	0.85	0.85	0.85	0.85	0.85
Percent Heavy Veh, %	3	3	3	3	3	3	3	3	3	3	3	3
Cap, veh/h	320	12	295	28	9	51	262	908	22	106	913	773
Arrive On Green	0.19	0.19	0.19	0.05	0.05	0.05	0.03	0.50	0.50	0.02	0.49	0.49
Sat Flow, veh/h	1708	62	1572	520	166	969	1767	1805	43	1767	1856	1572
Grp Volume(v), veh/h	373	0	64	70	0	0	35	0	1115	18	666	165
Grp Sat Flow(s),veh/h/ln	1770	0	1572	1655	0	0	1767	0	1848	1767	1856	1572
Q Serve(g_s), s	19.0	0.0	3.5	4.2	0.0	0.0	1.0	0.0	51.0	0.5	28.8	6.0
Cycle Q Clear(g_c), s	19.0	0.0	3.5	4.2	0.0	0.0	1.0	0.0	51.0	0.5	28.8	6.0
Prop In Lane	0.97		1.00	0.31		0.59	1.00		0.02	1.00		1.00
Lane Grp Cap(c), veh/h	332	0	295	88	0	0	262	0	930	106	913	773
V/C Ratio(X)	1.12	0.00	0.22	0.80	0.00	0.00	0.13	0.00	1.20	0.17	0.73	0.21
Avail Cap(c_a), veh/h	332	0	295	98	0	0	294	0	930	158	934	791
HCM Platoon Ratio	1.00	1.00	1.00	1.00	1.00	1.00	1.00	1.00	1.00	1.00	1.00	1.00
Upstream Filter(I)	1.00	0.00	1.00	1.00	0.00	0.00	1.00	0.00	1.00	1.00	1.00	1.00
Uniform Delay (d), s/veh	41.2	0.0	34.9	47.5	0.0	0.0	16.1	0.0	25.2	24.5	20.4	14.6
Incr Delay (d2), s/veh	87.3	0.0	0.4	32.9	0.0	0.0	0.2	0.0	100.1	0.8	2.9	0.1
Initial Q Delay(d3),s/veh	0.0	0.0	0.0	0.0	0.0	0.0	0.0	0.0	0.0	0.0	0.0	0.0
%ile BackOfQ(50%),veh/ln	16.2	0.0	1.4	2.5	0.0	0.0	0.4	0.0	45.8	0.2	12.1	2.1
Unsig. Movement Delay, s/veh												
LnGrp Delay(d),s/veh	128.5	0.0	35.2	80.4	0.0	0.0	16.3	0.0	125.3	25.2	23.3	14.8
LnGrp LOS	F	A	D	F	A	A	B	A	F	C	C	B
Approach Vol, veh/h		437			70			1150			849	
Approach Delay, s/veh		114.8			80.4			122.0			21.7	
Approach LOS		F			F			F			C	

Timer - Assigned Phs	1	2		4	5	6		8
Phs Duration (G+Y+Rc), s	8.0	57.0		11.4	9.1	55.9		25.0
Change Period (Y+Rc), s	6.0	6.0		6.0	6.0	6.0		6.0
Max Green Setting (Gmax), s	5.0	51.0		6.0	5.0	51.0		19.0
Max Q Clear Time (g_c+I1), s	2.5	53.0		6.2	3.0	30.8		21.0
Green Ext Time (p_c), s	0.0	0.0		0.0	0.0	4.8		0.0

Intersection Summary	
HCM 6th Ctrl Delay	85.6
HCM 6th LOS	F

Lane Group	EBT	WBT	WBR	NBT	SBT	SBR
Lane Group Flow (vph)	550	52	151	261	254	254
v/c Ratio	0.86	0.08	0.17	0.52	0.66	0.41
Control Delay	31.1	9.1	2.8	19.4	25.3	4.5
Queue Delay	0.0	0.0	0.0	0.0	0.0	0.0
Total Delay	31.1	9.1	2.8	19.4	25.3	4.5
Queue Length 50th (ft)	133	8	0	66	69	0
Queue Length 95th (ft)	#379	28	27	120	130	39
Internal Link Dist (ft)	1458	1130		711	2455	
Turn Bay Length (ft)			85			135
Base Capacity (vph)	655	692	887	765	592	813
Starvation Cap Reductn	0	0	0	0	0	0
Spillback Cap Reductn	0	0	0	0	0	0
Storage Cap Reductn	0	0	0	0	0	0
Reduced v/c Ratio	0.84	0.08	0.17	0.34	0.43	0.31

Intersection Summary

95th percentile volume exceeds capacity, queue may be longer.
Queue shown is maximum after two cycles.

Movement	EBL	EBT	EBR	WBL	WBT	WBR	NBL	NBT	NBR	SBL	SBT	SBR
Lane Configurations												
Traffic Volume (veh/h)	488	13	16	27	22	142	19	215	11	93	146	239
Future Volume (veh/h)	488	13	16	27	22	142	19	215	11	93	146	239
Initial Q (Qb), veh	0	0	0	0	0	0	0	0	0	0	0	0
Ped-Bike Adj(A_pbT)	1.00		1.00	1.00		1.00	1.00		1.00	1.00		1.00
Parking Bus, Adj	1.00	1.00	1.00	1.00	1.00	1.00	1.00	1.00	1.00	1.00	1.00	1.00
Work Zone On Approach		No			No			No			No	
Adj Sat Flow, veh/h/ln	1885	1411	1900	1900	1900	1900	1900	1885	1900	1811	1856	1856
Adj Flow Rate, veh/h	519	14	17	29	23	151	20	229	12	99	155	254
Peak Hour Factor	0.94	0.94	0.94	0.94	0.94	0.94	0.94	0.94	0.94	0.94	0.94	0.94
Percent Heavy Veh, %	1	33	0	0	0	0	0	1	0	6	3	3
Cap, veh/h	592	12	15	621	463	848	89	327	16	211	239	362
Arrive On Green	0.53	0.53	0.53	0.53	0.53	0.53	0.23	0.23	0.23	0.23	0.23	0.23
Sat Flow, veh/h	854	23	28	963	880	1610	45	1420	71	477	1038	1572
Grp Volume(v), veh/h	550	0	0	52	0	151	261	0	0	254	0	254
Grp Sat Flow(s),veh/h/ln	905	0	0	1842	0	1610	1536	0	0	1515	0	1572
Q Serve(g_s), s	25.3	0.0	0.0	0.0	0.0	2.4	0.8	0.0	0.0	0.0	0.0	7.3
Cycle Q Clear(g_c), s	26.0	0.0	0.0	0.7	0.0	2.4	8.3	0.0	0.0	7.5	0.0	7.3
Prop In Lane	0.94		0.03	0.56		1.00	0.08		0.05	0.39		1.00
Lane Grp Cap(c), veh/h	619	0	0	1084	0	848	432	0	0	450	0	362
V/C Ratio(X)	0.89	0.00	0.00	0.05	0.00	0.18	0.60	0.00	0.00	0.56	0.00	0.70
Avail Cap(c_a), veh/h	619	0	0	1084	0	848	809	0	0	770	0	701
HCM Platoon Ratio	1.00	1.00	1.00	1.00	1.00	1.00	1.00	1.00	1.00	1.00	1.00	1.00
Upstream Filter(I)	1.00	0.00	0.00	1.00	0.00	1.00	1.00	0.00	0.00	1.00	0.00	1.00
Uniform Delay (d), s/veh	13.7	0.0	0.0	5.7	0.0	6.1	17.1	0.0	0.0	17.4	0.0	17.4
Incr Delay (d2), s/veh	14.9	0.0	0.0	0.0	0.0	0.1	1.4	0.0	0.0	1.1	0.0	2.5
Initial Q Delay(d3),s/veh	0.0	0.0	0.0	0.0	0.0	0.0	0.0	0.0	0.0	0.0	0.0	0.0
%ile BackOfQ(50%),veh/ln	7.1	0.0	0.0	0.2	0.0	0.6	2.2	0.0	0.0	2.2	0.0	2.3
Unsig. Movement Delay, s/veh												
LnGrp Delay(d),s/veh	28.5	0.0	0.0	5.7	0.0	6.2	18.5	0.0	0.0	18.5	0.0	19.9
LnGrp LOS	C	A	A	A	A	A	B	A	A	B	A	B
Approach Vol, veh/h		550			203			261			508	
Approach Delay, s/veh		28.5			6.1			18.5			19.2	
Approach LOS		C			A			B			B	

Timer - Assigned Phs		2		4		6		8				
Phs Duration (G+Y+Rc), s		17.4		32.0		17.4		32.0				
Change Period (Y+Rc), s		6.0		6.0		6.0		6.0				
Max Green Setting (Gmax), s		22.0		26.0		22.0		26.0				
Max Q Clear Time (g_c+I1), s		10.3		28.0		9.5		4.4				
Green Ext Time (p_c), s		1.0		0.0		1.8		0.7				

Intersection Summary	
HCM 6th Ctrl Delay	20.7
HCM 6th LOS	C

Intersection	
Int Delay, s/veh	2

Movement	EBL	EBT	EBR	WBL	WBT	WBR	NBL	NBT	NBR	SBL	SBT	SBR
Lane Configurations												
Traffic Vol, veh/h	17	318	0	0	175	35	1	11	1	46	10	6
Future Vol, veh/h	17	318	0	0	175	35	1	11	1	46	10	6
Conflicting Peds, #/hr	0	0	0	0	0	0	0	0	0	0	0	0
Sign Control	Free	Free	Free	Free	Free	Free	Stop	Stop	Stop	Stop	Stop	Stop
RT Channelized	-	-	None	-	-	None	-	-	None	-	-	None
Storage Length	-	-	-	-	-	-	-	-	-	-	-	-
Veh in Median Storage, #	-	0	-	-	0	-	-	0	-	-	0	-
Grade, %	-	0	-	-	0	-	-	0	-	-	0	-
Peak Hour Factor	92	92	92	92	92	92	92	92	92	92	92	92
Heavy Vehicles, %	2	2	2	2	2	2	2	2	2	2	2	2
Mvmt Flow	18	346	0	0	190	38	1	12	1	50	11	7

Major/Minor	Major1			Major2			Minor1			Minor2		
Conflicting Flow All	228	0	0	346	0	0	600	610	346	598	591	209
Stage 1	-	-	-	-	-	-	382	382	-	209	209	-
Stage 2	-	-	-	-	-	-	218	228	-	389	382	-
Critical Hdwy	4.12	-	-	4.12	-	-	7.12	6.52	6.22	7.12	6.52	6.22
Critical Hdwy Stg 1	-	-	-	-	-	-	6.12	5.52	-	6.12	5.52	-
Critical Hdwy Stg 2	-	-	-	-	-	-	6.12	5.52	-	6.12	5.52	-
Follow-up Hdwy	2.218	-	-	2.218	-	-	3.518	4.018	3.318	3.518	4.018	3.318
Pot Cap-1 Maneuver	1340	-	-	1213	-	-	413	409	697	414	420	831
Stage 1	-	-	-	-	-	-	640	613	-	793	729	-
Stage 2	-	-	-	-	-	-	784	715	-	635	613	-
Platoon blocked, %		-	-		-	-						
Mov Cap-1 Maneuver	1340	-	-	1213	-	-	396	402	697	399	413	831
Mov Cap-2 Maneuver	-	-	-	-	-	-	396	402	-	399	413	-
Stage 1	-	-	-	-	-	-	629	603	-	780	729	-
Stage 2	-	-	-	-	-	-	766	715	-	611	603	-

Approach	EB	WB	NB	SB
HCM Control Delay, s	0.4	0	14	15.1
HCM LOS			B	C

Minor Lane/Major Mvmt	NBLn1	EBL	EBT	EBR	WBL	WBT	WBR	SBLn1
Capacity (veh/h)	415	1340	-	-	1213	-	-	423
HCM Lane V/C Ratio	0.034	0.014	-	-	-	-	-	0.159
HCM Control Delay (s)	14	7.7	0	-	0	-	-	15.1
HCM Lane LOS	B	A	A	-	A	-	-	C
HCM 95th %tile Q(veh)	0.1	0	-	-	0	-	-	0.6

Intersection	
Int Delay, s/veh	0.8

Movement	EBL	EBT	WBT	WBR	SBL	SBR
Lane Configurations						
Traffic Vol, veh/h	2	498	235	45	35	2
Future Vol, veh/h	2	498	235	45	35	2
Conflicting Peds, #/hr	0	0	0	0	0	0
Sign Control	Free	Free	Free	Free	Stop	Stop
RT Channelized	-	None	-	None	-	None
Storage Length	-	-	-	-	0	-
Veh in Median Storage, #	-	0	0	-	0	-
Grade, %	-	0	0	-	0	-
Peak Hour Factor	92	92	92	92	92	92
Heavy Vehicles, %	2	2	2	2	2	2
Mvmt Flow	2	541	255	49	38	2

Major/Minor	Major1		Major2		Minor2	
Conflicting Flow All	304	0	-	0	825	280
Stage 1	-	-	-	-	280	-
Stage 2	-	-	-	-	545	-
Critical Hdwy	4.12	-	-	-	6.42	6.22
Critical Hdwy Stg 1	-	-	-	-	5.42	-
Critical Hdwy Stg 2	-	-	-	-	5.42	-
Follow-up Hdwy	2.218	-	-	-	3.518	3.318
Pot Cap-1 Maneuver	1257	-	-	-	342	759
Stage 1	-	-	-	-	767	-
Stage 2	-	-	-	-	581	-
Platoon blocked, %		-	-	-		
Mov Cap-1 Maneuver	1257	-	-	-	341	759
Mov Cap-2 Maneuver	-	-	-	-	341	-
Stage 1	-	-	-	-	765	-
Stage 2	-	-	-	-	581	-

Approach	EB	WB	SB
HCM Control Delay, s	0	0	16.6
HCM LOS			C

Minor Lane/Major Mvmt	EBL	EBT	WBT	WBR	SBLn1
Capacity (veh/h)	1257	-	-	-	351
HCM Lane V/C Ratio	0.002	-	-	-	0.115
HCM Control Delay (s)	7.9	0	-	-	16.6
HCM Lane LOS	A	A	-	-	C
HCM 95th %tile Q(veh)	0	-	-	-	0.4

Lane Group	EBT	EBR	WBT	NBL	NBT	SBL	SBT	SBR
Lane Group Flow (vph)	320	65	61	39	734	29	1075	282
v/c Ratio	1.03	0.16	0.50	0.27	0.70	0.10	1.03	0.29
Control Delay	104.1	0.9	46.6	13.2	23.2	9.2	60.6	5.5
Queue Delay	0.0	0.0	0.0	0.0	0.0	0.0	0.0	0.0
Total Delay	104.1	0.9	46.6	13.2	23.2	9.2	60.6	5.5
Queue Length 50th (ft)	~269	0	23	10	407	8	~903	32
Queue Length 95th (ft)	#411	0	63	22	510	18	#1050	68
Internal Link Dist (ft)	425		298		1363		345	
Turn Bay Length (ft)				105		190		180
Base Capacity (vph)	311	394	122	147	1044	289	1048	973
Starvation Cap Reductn	0	0	0	0	0	0	0	0
Spillback Cap Reductn	0	0	0	0	0	0	0	0
Storage Cap Reductn	0	0	0	0	0	0	0	0
Reduced v/c Ratio	1.03	0.16	0.50	0.27	0.70	0.10	1.03	0.29

Intersection Summary

~ Volume exceeds capacity, queue is theoretically infinite.
Queue shown is maximum after two cycles.

95th percentile volume exceeds capacity, queue may be longer.
Queue shown is maximum after two cycles.

Movement	EBL	EBT	EBR	WBL	WBT	WBR	NBL	NBT	NBR	SBL	SBT	SBR
Lane Configurations												
Traffic Volume (veh/h)	257	15	55	16	11	25	33	607	17	25	914	240
Future Volume (veh/h)	257	15	55	16	11	25	33	607	17	25	914	240
Initial Q (Qb), veh	0	0	0	0	0	0	0	0	0	0	0	0
Ped-Bike Adj(A_pbT)	1.00		1.00	1.00		1.00	1.00		1.00	1.00		1.00
Parking Bus, Adj	1.00	1.00	1.00	1.00	1.00	1.00	1.00	1.00	1.00	1.00	1.00	1.00
Work Zone On Approach		No			No			No			No	
Adj Sat Flow, veh/h/ln	1856	1856	1856	1856	1856	1856	1856	1856	1856	1856	1856	1856
Adj Flow Rate, veh/h	302	18	65	19	13	29	39	714	20	29	1075	282
Peak Hour Factor	0.85	0.85	0.85	0.85	0.85	0.85	0.85	0.85	0.85	0.85	0.85	0.85
Percent Heavy Veh, %	3	3	3	3	3	3	3	3	3	3	3	3
Cap, veh/h	282	17	265	24	16	37	119	981	27	288	1005	851
Arrive On Green	0.17	0.17	0.17	0.05	0.05	0.05	0.03	0.55	0.55	0.03	0.54	0.54
Sat Flow, veh/h	1672	100	1572	525	359	801	1767	1796	50	1767	1856	1572
Grp Volume(v), veh/h	320	0	65	61	0	0	39	0	734	29	1075	282
Grp Sat Flow(s),veh/h/ln	1772	0	1572	1685	0	0	1767	0	1846	1767	1856	1572
Q Serve(g_s), s	19.0	0.0	4.0	4.0	0.0	0.0	1.1	0.0	33.7	0.8	61.0	11.3
Cycle Q Clear(g_c), s	19.0	0.0	4.0	4.0	0.0	0.0	1.1	0.0	33.7	0.8	61.0	11.3
Prop In Lane	0.94		1.00	0.31		0.48	1.00		0.03	1.00		1.00
Lane Grp Cap(c), veh/h	299	0	265	77	0	0	119	0	1009	288	1005	851
V/C Ratio(X)	1.07	0.00	0.25	0.79	0.00	0.00	0.33	0.00	0.73	0.10	1.07	0.33
Avail Cap(c_a), veh/h	299	0	265	90	0	0	142	0	1009	319	1005	851
HCM Platoon Ratio	1.00	1.00	1.00	1.00	1.00	1.00	1.00	1.00	1.00	1.00	1.00	1.00
Upstream Filter(I)	1.00	0.00	1.00	1.00	0.00	0.00	1.00	0.00	1.00	1.00	1.00	1.00
Uniform Delay (d), s/veh	46.8	0.0	40.6	53.2	0.0	0.0	27.0	0.0	19.3	15.8	25.8	14.4
Incr Delay (d2), s/veh	72.1	0.0	0.5	33.0	0.0	0.0	1.6	0.0	2.7	0.2	49.1	0.2
Initial Q Delay(d3),s/veh	0.0	0.0	0.0	0.0	0.0	0.0	0.0	0.0	0.0	0.0	0.0	0.0
%ile BackOfQ(50%),veh/ln	14.3	0.0	1.6	2.4	0.0	0.0	0.6	0.0	14.0	0.3	37.8	3.8
Unsig. Movement Delay, s/veh												
LnGrp Delay(d),s/veh	119.0	0.0	41.1	86.2	0.0	0.0	28.6	0.0	21.9	15.9	74.9	14.7
LnGrp LOS	F	A	D	F	A	A	C	A	C	B	F	B
Approach Vol, veh/h		385			61			773			1386	
Approach Delay, s/veh		105.8			86.2			22.3			61.4	
Approach LOS		F			F			C			E	

Timer - Assigned Phs	1	2		4	5	6		8
Phs Duration (G+Y+Rc), s	9.0	67.5		11.1	9.5	67.0		25.0
Change Period (Y+Rc), s	6.0	6.0		6.0	6.0	6.0		6.0
Max Green Setting (Gmax), s	5.0	61.0		6.0	5.0	61.0		19.0
Max Q Clear Time (g_c+I1), s	2.8	35.7		6.0	3.1	63.0		21.0
Green Ext Time (p_c), s	0.0	5.2		0.0	0.0	0.0		0.0

Intersection Summary	
HCM 6th Ctrl Delay	57.0
HCM 6th LOS	E

Lane Group	EBT	WBT	WBR	NBT	SBT	SBR
Lane Group Flow (vph)	416	45	156	265	445	543
v/c Ratio	0.84	0.08	0.22	0.38	0.82	0.57
Control Delay	34.6	12.3	3.6	13.0	30.3	4.0
Queue Delay	0.0	0.0	0.0	0.0	0.0	0.0
Total Delay	34.6	12.3	3.6	13.0	30.3	4.0
Queue Length 50th (ft)	128	10	0	59	134	0
Queue Length 95th (ft)	#276	27	30	109	#281	50
Internal Link Dist (ft)	1458	1130		711	2455	
Turn Bay Length (ft)			85			135
Base Capacity (vph)	581	666	795	827	644	1031
Starvation Cap Reductn	0	0	0	0	0	0
Spillback Cap Reductn	0	0	0	0	0	0
Storage Cap Reductn	0	0	0	0	0	0
Reduced v/c Ratio	0.72	0.07	0.20	0.32	0.69	0.53

Intersection Summary

95th percentile volume exceeds capacity, queue may be longer.
Queue shown is maximum after two cycles.

Movement	EBL	EBT	EBR	WBL	WBT	WBR	NBL	NBT	NBR	SBL	SBT	SBR
Lane Configurations												
Traffic Volume (veh/h)	337	28	25	18	24	147	25	191	33	200	218	510
Future Volume (veh/h)	337	28	25	18	24	147	25	191	33	200	218	510
Initial Q (Qb), veh	0	0	0	0	0	0	0	0	0	0	0	0
Ped-Bike Adj(A_pbT)	1.00		1.00	1.00		1.00	1.00		1.00	1.00		1.00
Parking Bus, Adj	1.00	1.00	1.00	1.00	1.00	1.00	1.00	1.00	1.00	1.00	1.00	1.00
Work Zone On Approach		No			No			No			No	
Adj Sat Flow, veh/h/ln	1885	1411	1900	1900	1900	1900	1900	1885	1900	1811	1856	1856
Adj Flow Rate, veh/h	359	30	27	19	26	156	27	203	35	213	232	543
Peak Hour Factor	0.94	0.94	0.94	0.94	0.94	0.94	0.94	0.94	0.94	0.94	0.94	0.94
Percent Heavy Veh, %	1	33	0	0	0	0	0	1	0	6	3	3
Cap, veh/h	412	25	23	339	434	617	66	342	52	211	158	655
Arrive On Green	0.38	0.38	0.38	0.38	0.38	0.38	0.42	0.42	0.42	0.42	0.42	0.42
Sat Flow, veh/h	784	66	59	663	1132	1610	0	822	125	293	378	1572
Grp Volume(v), veh/h	416	0	0	45	0	156	265	0	0	445	0	543
Grp Sat Flow(s),veh/h/ln	909	0	0	1795	0	1610	947	0	0	671	0	1572
Q Serve(g_s), s	22.1	0.0	0.0	0.0	0.0	4.0	0.0	0.0	0.0	0.0	0.0	18.5
Cycle Q Clear(g_c), s	23.0	0.0	0.0	0.9	0.0	4.0	25.0	0.0	0.0	25.0	0.0	18.5
Prop In Lane	0.86		0.06	0.42		1.00	0.10		0.13	0.48		1.00
Lane Grp Cap(c), veh/h	460	0	0	773	0	617	461	0	0	368	0	655
V/C Ratio(X)	0.90	0.00	0.00	0.06	0.00	0.25	0.58	0.00	0.00	1.21	0.00	0.83
Avail Cap(c_a), veh/h	460	0	0	773	0	617	461	0	0	368	0	655
HCM Platoon Ratio	1.00	1.00	1.00	1.00	1.00	1.00	1.00	1.00	1.00	1.00	1.00	1.00
Upstream Filter(I)	1.00	0.00	0.00	1.00	0.00	1.00	1.00	0.00	0.00	1.00	0.00	1.00
Uniform Delay (d), s/veh	20.7	0.0	0.0	11.7	0.0	12.6	13.2	0.0	0.0	20.0	0.0	15.6
Incr Delay (d2), s/veh	21.0	0.0	0.0	0.0	0.0	0.2	1.8	0.0	0.0	116.5	0.0	8.7
Initial Q Delay(d3),s/veh	0.0	0.0	0.0	0.0	0.0	0.0	0.0	0.0	0.0	0.0	0.0	0.0
%ile BackOfQ(50%),veh/ln	8.0	0.0	0.0	0.3	0.0	1.3	2.1	0.0	0.0	16.7	0.0	6.5
Unsig. Movement Delay, s/veh												
LnGrp Delay(d),s/veh	41.8	0.0	0.0	11.7	0.0	12.8	14.9	0.0	0.0	136.5	0.0	24.3
LnGrp LOS	D	A	A	B	A	B	B	A	A	F	A	C
Approach Vol, veh/h		416			201			265			988	
Approach Delay, s/veh		41.8			12.6			14.9			74.8	
Approach LOS		D			B			B			E	

Timer - Assigned Phs	2	4	6	8
Phs Duration (G+Y+Rc), s	31.0	29.0	31.0	29.0
Change Period (Y+Rc), s	6.0	6.0	6.0	6.0
Max Green Setting (Gmax), s	25.0	23.0	25.0	23.0
Max Q Clear Time (g_c+I1), s	27.0	25.0	27.0	6.0
Green Ext Time (p_c), s	0.0	0.0	0.0	0.6

Intersection Summary	
HCM 6th Ctrl Delay	52.3
HCM 6th LOS	D

Intersection	
Int Delay, s/veh	1.7

Movement	EBL	EBT	EBR	WBL	WBT	WBR	NBL	NBT	NBR	SBL	SBT	SBR
Lane Configurations												
Traffic Vol, veh/h	9	193	2	1	299	36	2	12	0	29	17	6
Future Vol, veh/h	9	193	2	1	299	36	2	12	0	29	17	6
Conflicting Peds, #/hr	0	0	0	0	0	0	0	0	0	0	0	0
Sign Control	Free	Free	Free	Free	Free	Free	Stop	Stop	Stop	Stop	Stop	Stop
RT Channelized	-	-	None	-	-	None	-	-	None	-	-	None
Storage Length	-	-	-	-	-	-	-	-	-	-	-	-
Veh in Median Storage, #	-	0	-	-	0	-	-	0	-	-	0	-
Grade, %	-	0	-	-	0	-	-	0	-	-	0	-
Peak Hour Factor	92	92	92	92	92	92	92	92	92	92	92	92
Heavy Vehicles, %	2	2	2	2	2	2	2	2	2	2	2	2
Mvmt Flow	10	210	2	1	325	39	2	13	0	32	18	7

Major/Minor	Major1			Major2			Minor1			Minor2		
Conflicting Flow All	364	0	0	212	0	0	590	597	211	585	579	345
Stage 1	-	-	-	-	-	-	231	231	-	347	347	-
Stage 2	-	-	-	-	-	-	359	366	-	238	232	-
Critical Hdwy	4.12	-	-	4.12	-	-	7.12	6.52	6.22	7.12	6.52	6.22
Critical Hdwy Stg 1	-	-	-	-	-	-	6.12	5.52	-	6.12	5.52	-
Critical Hdwy Stg 2	-	-	-	-	-	-	6.12	5.52	-	6.12	5.52	-
Follow-up Hdwy	2.218	-	-	2.218	-	-	3.518	4.018	3.318	3.518	4.018	3.318
Pot Cap-1 Maneuver	1195	-	-	1358	-	-	419	416	829	422	426	698
Stage 1	-	-	-	-	-	-	772	713	-	669	635	-
Stage 2	-	-	-	-	-	-	659	623	-	765	713	-
Platoon blocked, %		-	-		-	-						
Mov Cap-1 Maneuver	1195	-	-	1358	-	-	398	412	829	408	422	698
Mov Cap-2 Maneuver	-	-	-	-	-	-	398	412	-	408	422	-
Stage 1	-	-	-	-	-	-	765	707	-	663	634	-
Stage 2	-	-	-	-	-	-	633	622	-	744	707	-

Approach	EB	WB	NB	SB
HCM Control Delay, s	0.4	0	14.1	14.6
HCM LOS			B	B

Minor Lane/Major Mvmt	NBLn1	EBL	EBT	EBR	WBL	WBT	WBR	SBLn1
Capacity (veh/h)	410	1195	-	-	1358	-	-	433
HCM Lane V/C Ratio	0.037	0.008	-	-	0.001	-	-	0.131
HCM Control Delay (s)	14.1	8	0	-	7.7	0	-	14.6
HCM Lane LOS	B	A	A	-	A	A	-	B
HCM 95th %tile Q(veh)	0.1	0	-	-	0	-	-	0.4

Intersection	
Int Delay, s/veh	0.8

Movement	EBL	EBT	WBT	WBR	SBL	SBR
Lane Configurations						
Traffic Vol, veh/h	2	354	516	46	38	2
Future Vol, veh/h	2	354	516	46	38	2
Conflicting Peds, #/hr	0	0	0	0	0	0
Sign Control	Free	Free	Free	Free	Stop	Stop
RT Channelized	-	None	-	None	-	None
Storage Length	-	-	-	-	0	-
Veh in Median Storage, #	-	0	0	-	0	-
Grade, %	-	0	0	-	0	-
Peak Hour Factor	92	92	92	92	92	92
Heavy Vehicles, %	2	2	2	2	2	2
Mvmt Flow	2	385	561	50	41	2

Major/Minor	Major1		Major2		Minor2	
Conflicting Flow All	611	0	-	0	975	586
Stage 1	-	-	-	-	586	-
Stage 2	-	-	-	-	389	-
Critical Hdwy	4.12	-	-	-	6.42	6.22
Critical Hdwy Stg 1	-	-	-	-	5.42	-
Critical Hdwy Stg 2	-	-	-	-	5.42	-
Follow-up Hdwy	2.218	-	-	-	3.518	3.318
Pot Cap-1 Maneuver	968	-	-	-	279	510
Stage 1	-	-	-	-	556	-
Stage 2	-	-	-	-	685	-
Platoon blocked, %		-	-	-		
Mov Cap-1 Maneuver	968	-	-	-	278	510
Mov Cap-2 Maneuver	-	-	-	-	278	-
Stage 1	-	-	-	-	554	-
Stage 2	-	-	-	-	685	-

Approach	EB	WB	SB
HCM Control Delay, s	0	0	20
HCM LOS			C

Minor Lane/Major Mvmt	EBL	EBT	WBT	WBR	SBLn1
Capacity (veh/h)	968	-	-	-	284
HCM Lane V/C Ratio	0.002	-	-	-	0.153
HCM Control Delay (s)	8.7	0	-	-	20
HCM Lane LOS	A	A	-	-	C
HCM 95th %tile Q(veh)	0	-	-	-	0.5

APPENDIX C.4

INTERSECTION ANALYSES

MITIGATED BUILD SCENARIO

Queues
1: Lohman Ford Rd & Dawn Dr

12/26/2023

Lane Group	EBL	EBT	EBR	WBT	NBL	NBT	SBL	SBT	SBR
Lane Group Flow (vph)	187	186	64	70	35	1115	18	666	165
v/c Ratio	0.81	0.81	0.20	0.57	0.09	0.93	0.14	0.57	0.16
Control Delay	78.0	76.8	1.4	47.7	7.7	36.3	9.4	17.2	2.0
Queue Delay	0.0	0.0	0.0	0.0	0.0	0.0	0.0	0.0	0.0
Total Delay	78.0	76.8	1.4	47.7	7.7	36.3	9.4	17.2	2.0
Queue Length 50th (ft)	146	145	0	22	9	708	5	340	0
Queue Length 95th (ft)	#265	#262	0	#75	19	#1136	12	418	24
Internal Link Dist (ft)		425		298		1363		345	
Turn Bay Length (ft)	275				105		190		
Base Capacity (vph)	252	253	344	123	405	1194	132	1197	1075
Starvation Cap Reductn	0	0	0	0	0	0	0	0	0
Spillback Cap Reductn	0	0	0	0	0	0	0	0	0
Storage Cap Reductn	0	0	0	0	0	0	0	0	0
Reduced v/c Ratio	0.74	0.74	0.19	0.57	0.09	0.93	0.14	0.56	0.15

Intersection Summary

95th percentile volume exceeds capacity, queue may be longer.
Queue shown is maximum after two cycles.

Movement	EBL	EBT	EBR	WBL	WBT	WBR	NBL	NBT	NBR	SBL	SBT	SBR
Lane Configurations												
Traffic Volume (veh/h)	306	11	54	19	6	35	30	926	22	15	566	140
Future Volume (veh/h)	306	11	54	19	6	35	30	926	22	15	566	140
Initial Q (Qb), veh	0	0	0	0	0	0	0	0	0	0	0	0
Ped-Bike Adj(A_pbT)	1.00		1.00	1.00		1.00	1.00		1.00	1.00		1.00
Parking Bus, Adj	1.00	1.00	1.00	1.00	1.00	1.00	1.00	1.00	1.00	1.00	1.00	1.00
Work Zone On Approach		No			No			No			No	
Adj Sat Flow, veh/h/ln	1856	1856	1856	1856	1856	1856	1856	1856	1856	1856	1856	1856
Adj Flow Rate, veh/h	369	0	64	22	7	0	35	1089	26	18	666	165
Peak Hour Factor	0.85	0.85	0.85	0.85	0.85	0.85	0.85	0.85	0.85	0.85	0.85	0.85
Percent Heavy Veh, %	3	3	3	3	3	3	3	3	3	3	3	3
Cap, veh/h	438	0	195	42	13		373	1128	27	121	1141	967
Arrive On Green	0.12	0.00	0.12	0.03	0.03	0.00	0.03	0.62	0.62	0.02	0.61	0.61
Sat Flow, veh/h	3534	0	1572	1356	432	0	1767	1805	43	1767	1856	1572
Grp Volume(v), veh/h	369	0	64	29	0	0	35	0	1115	18	666	165
Grp Sat Flow(s),veh/h/ln	1767	0	1572	1788	0	0	1767	0	1848	1767	1856	1572
Q Serve(g_s), s	12.2	0.0	4.4	1.9	0.0	0.0	0.9	0.0	68.1	0.4	25.7	5.4
Cycle Q Clear(g_c), s	12.2	0.0	4.4	1.9	0.0	0.0	0.9	0.0	68.1	0.4	25.7	5.4
Prop In Lane	1.00		1.00	0.76		0.00	1.00		0.02	1.00		1.00
Lane Grp Cap(c), veh/h	438	0	195	56	0		373	0	1154	121	1141	967
V/C Ratio(X)	0.84	0.00	0.33	0.52	0.00		0.09	0.00	0.97	0.15	0.58	0.17
Avail Cap(c_a), veh/h	534	0	237	90	0		396	0	1193	161	1198	1016
HCM Platoon Ratio	1.00	1.00	1.00	1.00	1.00	1.00	1.00	1.00	1.00	1.00	1.00	1.00
Upstream Filter(I)	1.00	0.00	1.00	1.00	0.00	0.00	1.00	0.00	1.00	1.00	1.00	1.00
Uniform Delay (d), s/veh	51.1	0.0	47.7	56.9	0.0	0.0	10.7	0.0	21.2	27.5	13.8	9.9
Incr Delay (d2), s/veh	9.9	0.0	1.0	7.4	0.0	0.0	0.1	0.0	18.1	0.6	0.7	0.1
Initial Q Delay(d3),s/veh	0.0	0.0	0.0	0.0	0.0	0.0	0.0	0.0	0.0	0.0	0.0	0.0
%ile BackOfQ(50%),veh/ln	6.0	0.0	1.8	1.0	0.0	0.0	0.3	0.0	31.4	0.3	10.0	1.8
Unsig. Movement Delay, s/veh												
LnGrp Delay(d),s/veh	61.0	0.0	48.7	64.3	0.0	0.0	10.8	0.0	39.3	28.1	14.5	10.0
LnGrp LOS	E	A	D	E	A		B	A	D	C	B	A
Approach Vol, veh/h		433			29			1150			849	
Approach Delay, s/veh		59.2			64.3			38.4			13.9	
Approach LOS		E			E			D			B	

Timer - Assigned Phs	1	2		4	5	6		8
Phs Duration (G+Y+Rc), s	8.2	80.5		9.7	9.4	79.3		20.8
Change Period (Y+Rc), s	6.0	6.0		6.0	6.0	6.0		6.0
Max Green Setting (Gmax), s	5.0	77.0		6.0	5.0	77.0		18.0
Max Q Clear Time (g_c+I1), s	2.4	70.1		3.9	2.9	27.7		14.2
Green Ext Time (p_c), s	0.0	4.4		0.0	0.0	5.6		0.6

Intersection Summary	
HCM 6th Ctrl Delay	33.9
HCM 6th LOS	C

Notes

User approved volume balancing among the lanes for turning movement.

Unsignalized Delay for [WBR] is excluded from calculations of the approach delay and intersection delay.

Lane Group	EBL	EBT	WBT	WBR	NBT	SBT	SBR
Lane Group Flow (vph)	275	275	52	151	261	254	254
v/c Ratio	0.60	0.62	0.10	0.23	0.46	0.55	0.38
Control Delay	17.1	17.5	9.5	3.3	14.0	16.9	3.9
Queue Delay	0.0	0.0	0.0	0.0	0.0	0.0	0.0
Total Delay	17.1	17.5	9.5	3.3	14.0	16.9	3.9
Queue Length 50th (ft)	45	44	7	0	42	43	0
Queue Length 95th (ft)	123	123	26	26	103	109	35
Internal Link Dist (ft)		1458	1130		711	2455	
Turn Bay Length (ft)	150			85			135
Base Capacity (vph)	774	749	852	1029	894	727	908
Starvation Cap Reductn	0	0	0	0	0	0	0
Spillback Cap Reductn	0	0	0	0	0	0	0
Storage Cap Reductn	0	0	0	0	0	0	0
Reduced v/c Ratio	0.36	0.37	0.06	0.15	0.29	0.35	0.28

Intersection Summary

Movement	EBL	EBT	EBR	WBL	WBT	WBR	NBL	NBT	NBR	SBL	SBT	SBR
Lane Configurations												
Traffic Volume (veh/h)	488	13	16	27	22	142	19	215	11	93	146	239
Future Volume (veh/h)	488	13	16	27	22	142	19	215	11	93	146	239
Initial Q (Qb), veh	0	0	0	0	0	0	0	0	0	0	0	0
Ped-Bike Adj(A_pbT)	1.00		1.00	1.00		1.00	1.00		1.00	1.00		1.00
Parking Bus, Adj	1.00	1.00	1.00	1.00	1.00	1.00	1.00	1.00	1.00	1.00	1.00	1.00
Work Zone On Approach		No			No			No			No	
Adj Sat Flow, veh/h/ln	1885	1411	1900	1900	1900	1900	1900	1885	1900	1811	1856	1856
Adj Flow Rate, veh/h	545	0	0	29	23	151	20	229	12	99	155	254
Peak Hour Factor	0.94	0.94	0.94	0.94	0.94	0.94	0.94	0.94	0.94	0.94	0.94	0.94
Percent Heavy Veh, %	1	33	0	0	0	0	0	1	0	6	3	3
Cap, veh/h	1258	480	0	444	303	547	145	441	22	294	307	417
Arrive On Green	0.34	0.00	0.00	0.34	0.34	0.34	0.27	0.27	0.27	0.27	0.27	0.27
Sat Flow, veh/h	2441	1411	0	763	893	1610	66	1661	83	487	1156	1572
Grp Volume(v), veh/h	545	0	0	52	0	151	261	0	0	254	0	254
Grp Sat Flow(s),veh/h/ln	1220	1411	0	1656	0	1610	1810	0	0	1643	0	1572
Q Serve(g_s), s	5.9	0.0	0.0	0.0	0.0	2.1	0.0	0.0	0.0	0.0	0.0	4.3
Cycle Q Clear(g_c), s	6.5	0.0	0.0	0.6	0.0	2.1	3.6	0.0	0.0	3.6	0.0	4.3
Prop In Lane	1.00		0.00	0.56		1.00	0.08		0.05	0.39		1.00
Lane Grp Cap(c), veh/h	1258	480	0	747	0	547	608	0	0	600	0	417
V/C Ratio(X)	0.43	0.00	0.00	0.07	0.00	0.28	0.43	0.00	0.00	0.42	0.00	0.61
Avail Cap(c_a), veh/h	2034	928	0	1260	0	1059	1179	0	0	1085	0	931
HCM Platoon Ratio	1.00	1.00	1.00	1.00	1.00	1.00	1.00	1.00	1.00	1.00	1.00	1.00
Upstream Filter(I)	1.00	0.00	0.00	1.00	0.00	1.00	1.00	0.00	0.00	1.00	0.00	1.00
Uniform Delay (d), s/veh	9.0	0.0	0.0	6.8	0.0	7.3	9.5	0.0	0.0	9.5	0.0	9.8
Incr Delay (d2), s/veh	0.2	0.0	0.0	0.0	0.0	0.3	0.5	0.0	0.0	0.5	0.0	1.4
Initial Q Delay(d3),s/veh	0.0	0.0	0.0	0.0	0.0	0.0	0.0	0.0	0.0	0.0	0.0	0.0
%ile BackOfQ(50%),veh/ln	0.9	0.0	0.0	0.2	0.0	0.5	0.8	0.0	0.0	0.8	0.0	0.9
Unsig. Movement Delay, s/veh												
LnGrp Delay(d),s/veh	9.3	0.0	0.0	6.8	0.0	7.6	10.0	0.0	0.0	10.0	0.0	11.2
LnGrp LOS	A	A	A	A	A	A	B	A	A	A	A	B
Approach Vol, veh/h		545			203			261			508	
Approach Delay, s/veh		9.3			7.4			10.0			10.6	
Approach LOS		A			A			B			B	

Timer - Assigned Phs	2	4	6	8
Phs Duration (G+Y+Rc), s	14.1	16.3	14.1	16.3
Change Period (Y+Rc), s	6.0	6.0	6.0	6.0
Max Green Setting (Gmax), s	18.0	20.0	18.0	20.0
Max Q Clear Time (g_c+I1), s	5.6	8.5	6.3	4.1
Green Ext Time (p_c), s	1.0	1.9	1.8	0.6

Intersection Summary	
HCM 6th Ctrl Delay	9.6
HCM 6th LOS	A

Notes

User approved volume balancing among the lanes for turning movement.

Intersection	
Int Delay, s/veh	2

Movement	EBL	EBT	EBR	WBL	WBT	WBR	NBL	NBT	NBR	SBL	SBT	SBR
Lane Configurations												
Traffic Vol, veh/h	17	318	0	0	175	35	1	11	1	46	10	6
Future Vol, veh/h	17	318	0	0	175	35	1	11	1	46	10	6
Conflicting Peds, #/hr	0	0	0	0	0	0	0	0	0	0	0	0
Sign Control	Free	Free	Free	Free	Free	Free	Stop	Stop	Stop	Stop	Stop	Stop
RT Channelized	-	-	None	-	-	None	-	-	None	-	-	None
Storage Length	-	-	-	-	-	-	-	-	-	-	-	-
Veh in Median Storage, #	-	0	-	-	0	-	-	0	-	-	0	-
Grade, %	-	0	-	-	0	-	-	0	-	-	0	-
Peak Hour Factor	92	92	92	92	92	92	92	92	92	92	92	92
Heavy Vehicles, %	2	2	2	2	2	2	2	2	2	2	2	2
Mvmt Flow	18	346	0	0	190	38	1	12	1	50	11	7

Major/Minor	Major1			Major2			Minor1			Minor2		
Conflicting Flow All	228	0	0	346	0	0	600	610	346	598	591	209
Stage 1	-	-	-	-	-	-	382	382	-	209	209	-
Stage 2	-	-	-	-	-	-	218	228	-	389	382	-
Critical Hdwy	4.12	-	-	4.12	-	-	7.12	6.52	6.22	7.12	6.52	6.22
Critical Hdwy Stg 1	-	-	-	-	-	-	6.12	5.52	-	6.12	5.52	-
Critical Hdwy Stg 2	-	-	-	-	-	-	6.12	5.52	-	6.12	5.52	-
Follow-up Hdwy	2.218	-	-	2.218	-	-	3.518	4.018	3.318	3.518	4.018	3.318
Pot Cap-1 Maneuver	1340	-	-	1213	-	-	413	409	697	414	420	831
Stage 1	-	-	-	-	-	-	640	613	-	793	729	-
Stage 2	-	-	-	-	-	-	784	715	-	635	613	-
Platoon blocked, %		-	-		-	-						
Mov Cap-1 Maneuver	1340	-	-	1213	-	-	396	402	697	399	413	831
Mov Cap-2 Maneuver	-	-	-	-	-	-	396	402	-	399	413	-
Stage 1	-	-	-	-	-	-	629	603	-	780	729	-
Stage 2	-	-	-	-	-	-	766	715	-	611	603	-

Approach	EB	WB	NB	SB
HCM Control Delay, s	0.4	0	14	15.1
HCM LOS			B	C

Minor Lane/Major Mvmt	NBLn1	EBL	EBT	EBR	WBL	WBT	WBR	SBLn1
Capacity (veh/h)	415	1340	-	-	1213	-	-	423
HCM Lane V/C Ratio	0.034	0.014	-	-	-	-	-	0.159
HCM Control Delay (s)	14	7.7	0	-	0	-	-	15.1
HCM Lane LOS	B	A	A	-	A	-	-	C
HCM 95th %tile Q(veh)	0.1	0	-	-	0	-	-	0.6

Intersection	
Int Delay, s/veh	0.8

Movement	EBL	EBT	WBT	WBR	SBL	SBR
Lane Configurations						
Traffic Vol, veh/h	2	498	235	45	35	2
Future Vol, veh/h	2	498	235	45	35	2
Conflicting Peds, #/hr	0	0	0	0	0	0
Sign Control	Free	Free	Free	Free	Stop	Stop
RT Channelized	-	None	-	None	-	None
Storage Length	-	-	-	-	0	-
Veh in Median Storage, #	-	0	0	-	0	-
Grade, %	-	0	0	-	0	-
Peak Hour Factor	92	92	92	92	92	92
Heavy Vehicles, %	2	2	2	2	2	2
Mvmt Flow	2	541	255	49	38	2

Major/Minor	Major1		Major2		Minor2	
Conflicting Flow All	304	0	-	0	825	280
Stage 1	-	-	-	-	280	-
Stage 2	-	-	-	-	545	-
Critical Hdwy	4.12	-	-	-	6.42	6.22
Critical Hdwy Stg 1	-	-	-	-	5.42	-
Critical Hdwy Stg 2	-	-	-	-	5.42	-
Follow-up Hdwy	2.218	-	-	-	3.518	3.318
Pot Cap-1 Maneuver	1257	-	-	-	342	759
Stage 1	-	-	-	-	767	-
Stage 2	-	-	-	-	581	-
Platoon blocked, %		-	-	-		
Mov Cap-1 Maneuver	1257	-	-	-	341	759
Mov Cap-2 Maneuver	-	-	-	-	341	-
Stage 1	-	-	-	-	765	-
Stage 2	-	-	-	-	581	-

Approach	EB	WB	SB
HCM Control Delay, s	0	0	16.6
HCM LOS			C

Minor Lane/Major Mvmt	EBL	EBT	WBT	WBR	SBLn1
Capacity (veh/h)	1257	-	-	-	351
HCM Lane V/C Ratio	0.002	-	-	-	0.115
HCM Control Delay (s)	7.9	0	-	-	16.6
HCM Lane LOS	A	A	-	-	C
HCM 95th %tile Q(veh)	0	-	-	-	0.4

Queues
1: Lohman Ford Rd & Dawn Dr

12/26/2023

Lane Group	EBL	EBT	EBR	WBT	NBL	NBT	SBL	SBT	SBR
Lane Group Flow (vph)	160	160	65	61	39	734	29	1075	282
v/c Ratio	0.72	0.72	0.20	0.51	0.27	0.65	0.08	0.94	0.27
Control Delay	66.3	65.7	1.4	48.6	12.5	19.5	8.0	39.4	4.8
Queue Delay	0.0	0.0	0.0	0.0	0.0	0.0	0.0	0.0	0.0
Total Delay	66.3	65.7	1.4	48.6	12.5	19.5	8.0	39.4	4.8
Queue Length 50th (ft)	124	124	0	24	10	386	7	~882	29
Queue Length 95th (ft)	190	189	0	65	21	494	17	#1048	63
Internal Link Dist (ft)		425		298		1363		345	
Turn Bay Length (ft)	275				105		190		
Base Capacity (vph)	273	275	371	120	144	1137	346	1141	1045
Starvation Cap Reductn	0	0	0	0	0	0	0	0	0
Spillback Cap Reductn	0	0	0	0	0	0	0	0	0
Storage Cap Reductn	0	0	0	0	0	0	0	0	0
Reduced v/c Ratio	0.59	0.58	0.18	0.51	0.27	0.65	0.08	0.94	0.27

Intersection Summary

~ Volume exceeds capacity, queue is theoretically infinite.
Queue shown is maximum after two cycles.

95th percentile volume exceeds capacity, queue may be longer.
Queue shown is maximum after two cycles.

Movement	EBL	EBT	EBR	WBL	WBT	WBR	NBL	NBT	NBR	SBL	SBT	SBR
Lane Configurations												
Traffic Volume (veh/h)	257	15	55	16	11	25	33	607	17	25	914	240
Future Volume (veh/h)	257	15	55	16	11	25	33	607	17	25	914	240
Initial Q (Qb), veh	0	0	0	0	0	0	0	0	0	0	0	0
Ped-Bike Adj(A_pbT)	1.00		1.00	1.00		1.00	1.00		1.00	1.00		1.00
Parking Bus, Adj	1.00	1.00	1.00	1.00	1.00	1.00	1.00	1.00	1.00	1.00	1.00	1.00
Work Zone On Approach		No			No			No			No	
Adj Sat Flow, veh/h/ln	1856	1856	1856	1856	1856	1856	1856	1856	1856	1856	1856	1856
Adj Flow Rate, veh/h	315	0	65	19	13	0	39	714	20	29	1075	282
Peak Hour Factor	0.85	0.85	0.85	0.85	0.85	0.85	0.85	0.85	0.85	0.85	0.85	0.85
Percent Heavy Veh, %	3	3	3	3	3	3	3	3	3	3	3	3
Cap, veh/h	397	0	177	37	25		143	1089	30	362	1116	945
Arrive On Green	0.11	0.00	0.11	0.03	0.03	0.00	0.03	0.61	0.61	0.03	0.60	0.60
Sat Flow, veh/h	3534	0	1572	1070	732	0	1767	1796	50	1767	1856	1572
Grp Volume(v), veh/h	315	0	65	32	0	0	39	0	734	29	1075	282
Grp Sat Flow(s),veh/h/ln	1767	0	1572	1802	0	0	1767	0	1846	1767	1856	1572
Q Serve(g_s), s	9.5	0.0	4.2	1.9	0.0	0.0	0.9	0.0	28.3	0.7	59.8	9.5
Cycle Q Clear(g_c), s	9.5	0.0	4.2	1.9	0.0	0.0	0.9	0.0	28.3	0.7	59.8	9.5
Prop In Lane	1.00		1.00	0.59		0.00	1.00		0.03	1.00		1.00
Lane Grp Cap(c), veh/h	397	0	177	62	0		143	0	1119	362	1116	945
V/C Ratio(X)	0.79	0.00	0.37	0.52	0.00		0.27	0.00	0.66	0.08	0.96	0.30
Avail Cap(c_a), veh/h	585	0	260	99	0		168	0	1137	396	1143	968
HCM Platoon Ratio	1.00	1.00	1.00	1.00	1.00	1.00	1.00	1.00	1.00	1.00	1.00	1.00
Upstream Filter(I)	1.00	0.00	1.00	1.00	0.00	0.00	1.00	0.00	1.00	1.00	1.00	1.00
Uniform Delay (d), s/veh	47.1	0.0	44.7	51.7	0.0	0.0	25.7	0.0	14.0	11.3	20.6	10.5
Incr Delay (d2), s/veh	4.6	0.0	1.3	6.6	0.0	0.0	1.0	0.0	1.3	0.1	18.3	0.2
Initial Q Delay(d3),s/veh	0.0	0.0	0.0	0.0	0.0	0.0	0.0	0.0	0.0	0.0	0.0	0.0
%ile BackOfQ(50%),veh/ln	4.4	0.0	1.7	1.0	0.0	0.0	0.6	0.0	10.8	0.2	27.9	3.0
Unsig. Movement Delay, s/veh												
LnGrp Delay(d),s/veh	51.7	0.0	46.0	58.3	0.0	0.0	26.7	0.0	15.4	11.4	38.9	10.7
LnGrp LOS	D	A	D	E	A		C	A	B	B	D	B
Approach Vol, veh/h		380			32			773			1386	
Approach Delay, s/veh		50.7			58.3			15.9			32.6	
Approach LOS		D			E			B			C	

Timer - Assigned Phs	1	2		4	5	6		8
Phs Duration (G+Y+Rc), s	8.9	72.0		9.7	9.5	71.4		18.2
Change Period (Y+Rc), s	6.0	6.0		6.0	6.0	6.0		6.0
Max Green Setting (Gmax), s	5.0	67.0		6.0	5.0	67.0		18.0
Max Q Clear Time (g_c+I1), s	2.7	30.3		3.9	2.9	61.8		11.5
Green Ext Time (p_c), s	0.0	5.6		0.0	0.0	3.6		0.8

Intersection Summary	
HCM 6th Ctrl Delay	30.6
HCM 6th LOS	C

Notes

User approved volume balancing among the lanes for turning movement.

Unsignalized Delay for [WBR] is excluded from calculations of the approach delay and intersection delay.

Lane Group	EBL	EBT	WBT	WBR	NBT	SBT	SBR
Lane Group Flow (vph)	208	208	45	156	265	445	543
v/c Ratio	0.60	0.59	0.11	0.29	0.33	0.71	0.53
Control Delay	24.5	23.4	15.4	5.0	9.1	18.2	3.1
Queue Delay	0.0	0.0	0.0	0.0	0.0	0.0	0.0
Total Delay	24.5	23.4	15.4	5.0	9.1	18.2	3.1
Queue Length 50th (ft)	51	48	9	0	38	88	0
Queue Length 95th (ft)	127	123	32	35	89	207	41
Internal Link Dist (ft)		1458	1130		711	2455	
Turn Bay Length (ft)	150			85			135
Base Capacity (vph)	520	515	621	739	1157	893	1225
Starvation Cap Reductn	0	0	0	0	0	0	0
Spillback Cap Reductn	0	0	0	0	0	0	0
Storage Cap Reductn	0	0	0	0	0	0	0
Reduced v/c Ratio	0.40	0.40	0.07	0.21	0.23	0.50	0.44

Intersection Summary

Movement	EBL	EBT	EBR	WBL	WBT	WBR	NBL	NBT	NBR	SBL	SBT	SBR
Lane Configurations												
Traffic Volume (veh/h)	337	28	25	18	24	147	25	191	33	200	218	510
Future Volume (veh/h)	337	28	25	18	24	147	25	191	33	200	218	510
Initial Q (Qb), veh	0	0	0	0	0	0	0	0	0	0	0	0
Ped-Bike Adj(A_pbT)	1.00		1.00	1.00		1.00	1.00		1.00	1.00		1.00
Parking Bus, Adj	1.00	1.00	1.00	1.00	1.00	1.00	1.00	1.00	1.00	1.00	1.00	1.00
Work Zone On Approach		No			No			No			No	
Adj Sat Flow, veh/h/ln	1885	1411	1900	1900	1900	1900	1900	1885	1900	1811	1856	1856
Adj Flow Rate, veh/h	406	0	0	19	26	156	27	203	35	213	232	543
Peak Hour Factor	0.94	0.94	0.94	0.94	0.94	0.94	0.94	0.94	0.94	0.94	0.94	0.94
Percent Heavy Veh, %	1	33	0	0	0	0	0	1	0	6	3	3
Cap, veh/h	924	354	0	260	303	405	131	641	102	423	386	707
Arrive On Green	0.25	0.00	0.00	0.25	0.25	0.25	0.45	0.45	0.45	0.45	0.45	0.45
Sat Flow, veh/h	2423	1411	0	527	1205	1610	71	1425	228	647	859	1572
Grp Volume(v), veh/h	406	0	0	45	0	156	265	0	0	445	0	543
Grp Sat Flow(s),veh/h/ln	1211	1411	0	1732	0	1610	1724	0	0	1506	0	1572
Q Serve(g_s), s	6.2	0.0	0.0	0.0	0.0	3.2	0.0	0.0	0.0	4.8	0.0	11.6
Cycle Q Clear(g_c), s	6.9	0.0	0.0	0.7	0.0	3.2	3.7	0.0	0.0	8.5	0.0	11.6
Prop In Lane	1.00		0.00	0.42		1.00	0.10		0.13	0.48		1.00
Lane Grp Cap(c), veh/h	924	354	0	563	0	405	874	0	0	810	0	707
V/C Ratio(X)	0.44	0.00	0.00	0.08	0.00	0.39	0.30	0.00	0.00	0.55	0.00	0.77
Avail Cap(c_a), veh/h	1402	633	0	893	0	723	1344	0	0	1234	0	1176
HCM Platoon Ratio	1.00	1.00	1.00	1.00	1.00	1.00	1.00	1.00	1.00	1.00	1.00	1.00
Upstream Filter(I)	1.00	0.00	0.00	1.00	0.00	1.00	1.00	0.00	0.00	1.00	0.00	1.00
Uniform Delay (d), s/veh	14.2	0.0	0.0	11.5	0.0	12.5	7.1	0.0	0.0	8.2	0.0	9.3
Incr Delay (d2), s/veh	0.3	0.0	0.0	0.1	0.0	0.6	0.2	0.0	0.0	0.6	0.0	1.8
Initial Q Delay(d3),s/veh	0.0	0.0	0.0	0.0	0.0	0.0	0.0	0.0	0.0	0.0	0.0	0.0
%ile BackOfQ(50%),veh/ln	1.3	0.0	0.0	0.3	0.0	1.0	0.8	0.0	0.0	1.5	0.0	2.3
Unsig. Movement Delay, s/veh												
LnGrp Delay(d),s/veh	14.5	0.0	0.0	11.6	0.0	13.1	7.3	0.0	0.0	8.8	0.0	11.1
LnGrp LOS	B	A	A	B	A	B	A	A	A	A	A	B
Approach Vol, veh/h		406			201			265			988	
Approach Delay, s/veh		14.5			12.7			7.3			10.0	
Approach LOS		B			B			A			B	

Timer - Assigned Phs	2	4	6	8
Phs Duration (G+Y+Rc), s	24.0	16.1	24.0	16.1
Change Period (Y+Rc), s	6.0	6.0	6.0	6.0
Max Green Setting (Gmax), s	30.0	18.0	30.0	18.0
Max Q Clear Time (g_c+I1), s	5.7	8.9	13.6	5.2
Green Ext Time (p_c), s	1.5	1.2	4.4	0.6

Intersection Summary	
HCM 6th Ctrl Delay	10.9
HCM 6th LOS	B

Notes

User approved volume balancing among the lanes for turning movement.

Intersection	
Int Delay, s/veh	1.7

Movement	EBL	EBT	EBR	WBL	WBT	WBR	NBL	NBT	NBR	SBL	SBT	SBR
Lane Configurations												
Traffic Vol, veh/h	9	193	2	1	299	36	2	12	0	29	17	6
Future Vol, veh/h	9	193	2	1	299	36	2	12	0	29	17	6
Conflicting Peds, #/hr	0	0	0	0	0	0	0	0	0	0	0	0
Sign Control	Free	Free	Free	Free	Free	Free	Stop	Stop	Stop	Stop	Stop	Stop
RT Channelized	-	-	None	-	-	None	-	-	None	-	-	None
Storage Length	-	-	-	-	-	-	-	-	-	-	-	-
Veh in Median Storage, #	-	0	-	-	0	-	-	0	-	-	0	-
Grade, %	-	0	-	-	0	-	-	0	-	-	0	-
Peak Hour Factor	92	92	92	92	92	92	92	92	92	92	92	92
Heavy Vehicles, %	2	2	2	2	2	2	2	2	2	2	2	2
Mvmt Flow	10	210	2	1	325	39	2	13	0	32	18	7

Major/Minor	Major1			Major2			Minor1			Minor2		
Conflicting Flow All	364	0	0	212	0	0	590	597	211	585	579	345
Stage 1	-	-	-	-	-	-	231	231	-	347	347	-
Stage 2	-	-	-	-	-	-	359	366	-	238	232	-
Critical Hdwy	4.12	-	-	4.12	-	-	7.12	6.52	6.22	7.12	6.52	6.22
Critical Hdwy Stg 1	-	-	-	-	-	-	6.12	5.52	-	6.12	5.52	-
Critical Hdwy Stg 2	-	-	-	-	-	-	6.12	5.52	-	6.12	5.52	-
Follow-up Hdwy	2.218	-	-	2.218	-	-	3.518	4.018	3.318	3.518	4.018	3.318
Pot Cap-1 Maneuver	1195	-	-	1358	-	-	419	416	829	422	426	698
Stage 1	-	-	-	-	-	-	772	713	-	669	635	-
Stage 2	-	-	-	-	-	-	659	623	-	765	713	-
Platoon blocked, %		-	-		-	-						
Mov Cap-1 Maneuver	1195	-	-	1358	-	-	398	412	829	408	422	698
Mov Cap-2 Maneuver	-	-	-	-	-	-	398	412	-	408	422	-
Stage 1	-	-	-	-	-	-	765	707	-	663	634	-
Stage 2	-	-	-	-	-	-	633	622	-	744	707	-

Approach	EB	WB	NB	SB
HCM Control Delay, s	0.4	0	14.1	14.6
HCM LOS			B	B

Minor Lane/Major Mvmt	NBLn1	EBL	EBT	EBR	WBL	WBT	WBR	SBLn1
Capacity (veh/h)	410	1195	-	-	1358	-	-	433
HCM Lane V/C Ratio	0.037	0.008	-	-	0.001	-	-	0.131
HCM Control Delay (s)	14.1	8	0	-	7.7	0	-	14.6
HCM Lane LOS	B	A	A	-	A	A	-	B
HCM 95th %tile Q(veh)	0.1	0	-	-	0	-	-	0.4

Intersection	
Int Delay, s/veh	0.8

Movement	EBL	EBT	WBT	WBR	SBL	SBR
Lane Configurations						
Traffic Vol, veh/h	2	354	516	46	38	2
Future Vol, veh/h	2	354	516	46	38	2
Conflicting Peds, #/hr	0	0	0	0	0	0
Sign Control	Free	Free	Free	Free	Stop	Stop
RT Channelized	-	None	-	None	-	None
Storage Length	-	-	-	-	0	-
Veh in Median Storage, #	-	0	0	-	0	-
Grade, %	-	0	0	-	0	-
Peak Hour Factor	92	92	92	92	92	92
Heavy Vehicles, %	2	2	2	2	2	2
Mvmt Flow	2	385	561	50	41	2

Major/Minor	Major1		Major2		Minor2	
Conflicting Flow All	611	0	-	0	975	586
Stage 1	-	-	-	-	586	-
Stage 2	-	-	-	-	389	-
Critical Hdwy	4.12	-	-	-	6.42	6.22
Critical Hdwy Stg 1	-	-	-	-	5.42	-
Critical Hdwy Stg 2	-	-	-	-	5.42	-
Follow-up Hdwy	2.218	-	-	-	3.518	3.318
Pot Cap-1 Maneuver	968	-	-	-	279	510
Stage 1	-	-	-	-	556	-
Stage 2	-	-	-	-	685	-
Platoon blocked, %		-	-	-		
Mov Cap-1 Maneuver	968	-	-	-	278	510
Mov Cap-2 Maneuver	-	-	-	-	278	-
Stage 1	-	-	-	-	554	-
Stage 2	-	-	-	-	685	-

Approach	EB	WB	SB
HCM Control Delay, s	0	0	20
HCM LOS			C

Minor Lane/Major Mvmt	EBL	EBT	WBT	WBR	SBLn1
Capacity (veh/h)	968	-	-	-	284
HCM Lane V/C Ratio	0.002	-	-	-	0.153
HCM Control Delay (s)	8.7	0	-	-	20
HCM Lane LOS	A	A	-	-	C
HCM 95th %tile Q(veh)	0	-	-	-	0.5

APPENDIX D

PROVIDED BACKGROUND DEVELOPMENT FILES

APPENDIX D.1

SHORELINE RANCH DEVELOPMENT PROVIDED FILES

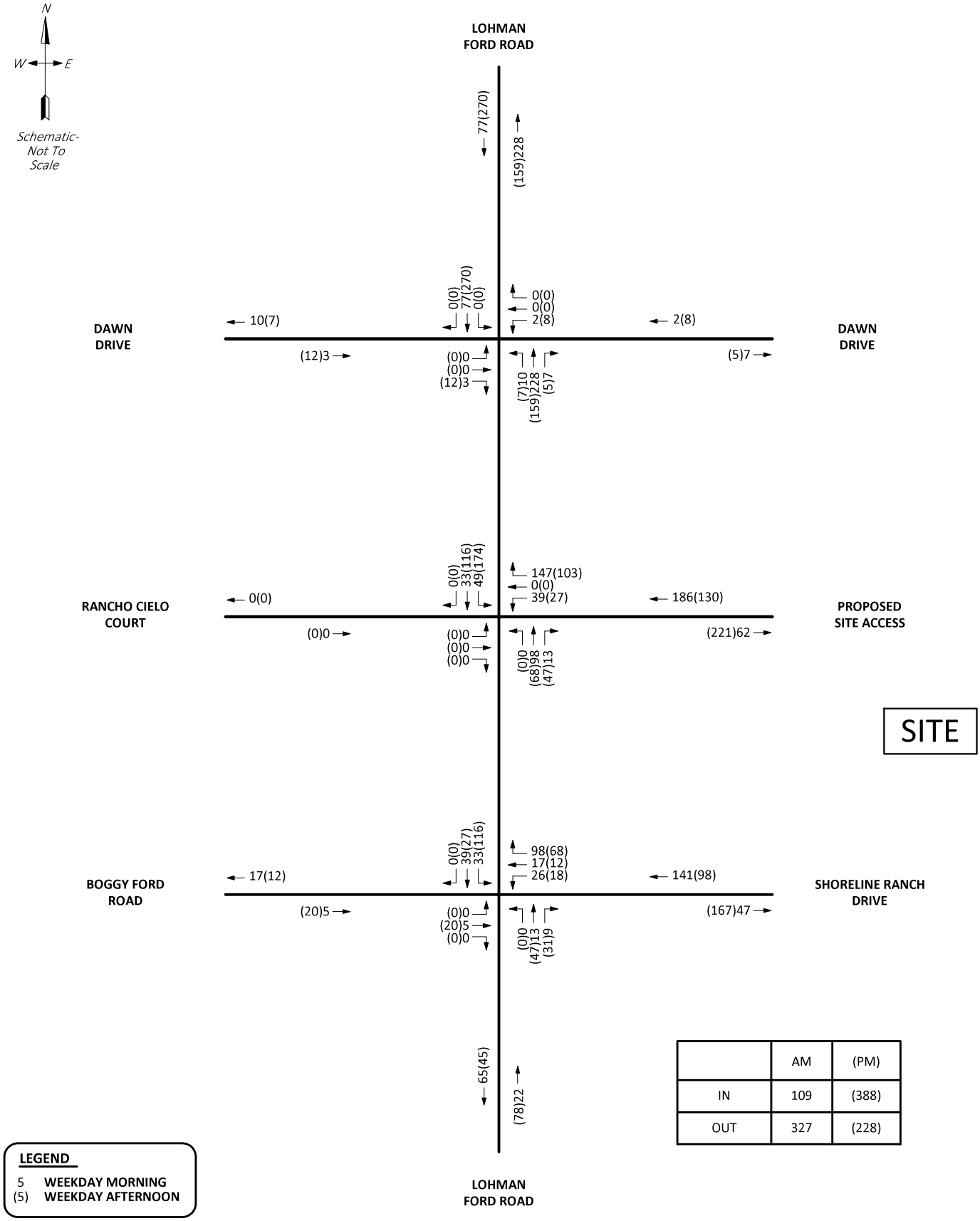

	AM	(PM)
IN	109	(388)
OUT	327	(228)

FIGURE 4B

New Trip Assignment - Phase 1

SHORELINE RANCH

LAGO VISTA, TRAVIS COUNTY, TX

McMAHON
a Bowman company

\\pitfs\mcm\eng\BOWMACO1\Z23278 Shoreline Ranch - Lago Vista, TX\Traffic\Graphics\2023-06 TIS\Figure 4

APPENDIX D.2

NATURE'S POINT DEVELOPMENT PROVIDED FILES

NATURE'S POINT TIA INFORMATION PROVIDED

Table 2 – 2026 S

ITE Land Use Code	Land Use	Size	Units
220	Multifamily Housing (Low-Rise)	50	Dwelling Unit(s)
330	Resort Hotel	150	Room(s)
820	Shopping Center	8	1,000 Sq Ft GLA
931	Quality Restaurant	6	1,000 Sq Ft
Total Project Trips			

GRAM Traffic Counting, inc.

3751 FM 1105, Bldg. A
Georgetown, TX 78626
512-832-8650

File Name : Site 2 - Lohman Ford Rd & Boggy Ford Rd - AM
Site Code : 2
Start Date : 11/15/2023
Page No : 3

Groups Printed- Vehicles

	Lohman Ford Rd Southbound					Shoreline Ranch Rd Westbound					Lohman Ford Rd Northbound					Boggy Ford Rd Eastbound					
Start Time	Left	Thru	Right	U-TURN	App. Total	Left	Thru	Right	U-TURN	App. Total	Left	Thru	Right	U-TURN	App. Total	Left	Thru	Right	U-TURN	App. Total	Int. Total
07:00	6	7	12	0	25	0	0	4	0	4	0	33	0	0	33	90	1	2	0	93	155
07:15	4	19	41	0	64	0	1	2	0	3	2	50	0	0	52	134	0	2	0	136	255
07:30	5	30	52	0	87	0	0	1	0	1	6	44	0	0	50	110	2	3	0	115	253
07:45	4	28	60	0	92	1	0	2	0	3	4	56	2	0	62	98	0	5	0	103	260
Total	19	84	165	0	268	1	1	9	0	11	12	183	2	0	197	432	3	12	0	447	923
08:00	2	23	33	0	58	0	0	7	0	7	4	42	0	0	46	95	0	3	0	98	209
08:15	2	16	50	0	68	0	0	3	0	3	4	44	0	0	48	124	1	2	0	127	246
08:30	1	35	63	0	99	0	0	1	0	1	0	36	0	0	36	95	1	3	0	99	235
08:45	1	29	40	0	70	0	2	4	0	6	3	30	0	0	33	73	2	11	0	86	195
Total	6	103	186	0	295	0	2	15	0	17	11	152	0	0	163	387	4	19	0	410	885
Grand Total	25	187	351	0	563	1	3	24	0	28	23	335	2	0	360	819	7	31	0	857	1808
Apprch %	4.4	33.2	62.3	0		3.6	10.7	85.7	0		6.4	93.1	0.6	0		95.6	0.8	3.6	0		
Total %	1.4	10.3	19.4	0	31.1	0.1	0.2	1.3	0	1.5	1.3	18.5	0.1	0	19.9	45.3	0.4	1.7	0	47.4	

	Lohman Ford Rd Southbound					Shoreline Ranch Rd Westbound					Lohman Ford Rd Northbound					Boggy Ford Rd Eastbound					
Start Time	Left	Thru	Right	U-TURN	App. Total	Left	Thru	Right	U-TURN	App. Total	Left	Thru	Right	U-TURN	App. Total	Left	Thru	Right	U-TURN	App. Total	Int. Total
Peak Hour Analysis From 07:00 to 08:45 - Peak 1 of 1																					
Peak Hour for Entire Intersection Begins at 07:15																					
07:15	4	19	41	0	64	0	**1**	2	0	3	2	50	0	0	52	**134**	0	2	0	**136**	255
07:30	**5**	**30**	52	0	87	0	0	1	0	1	**6**	44	0	0	50	110	**2**	3	0	115	253
07:45	4	28	**60**	0	**92**	**1**	0	2	0	3	4	**56**	**2**	0	**62**	98	0	**5**	0	103	**260**
08:00	2	23	33	0	58	0	0	**7**	0	**7**	4	42	0	0	46	95	0	3	0	98	209
Total Volume	15	100	186	0	301	1	1	12	0	14	16	192	2	0	210	437	2	13	0	452	977
% App. Total	5	33.2	61.8	0		7.1	7.1	85.7	0		7.6	91.4	1	0		96.7	0.4	2.9	0		
PHF	.750	.833	.775	.000	.818	.250	.250	.429	.000	.500	.667	.857	.250	.000	.847	.815	.250	.650	.000	.831	.939

Peak Hour Analysis From 07:00 to 08:45 - Peak 1 of 1
Peak Hour for Each Approach Begins at:

	07:45					08:00					07:15					07:15				
+0 mins.	**4**	28	60	0	92	0	0	**7**	0	**7**	2	50	0	0	52	**134**	0	2	0	**136**
+15 mins.	2	23	33	0	58	0	0	3	0	3	**6**	44	0	0	50	110	**2**	3	0	115
+30 mins.	2	16	50	0	68	0	0	1	0	1	4	**56**	**2**	0	**62**	98	0	**5**	0	103
+45 mins.	1	**35**	**63**	0	**99**	0	**2**	4	0	6	4	42	0	0	46	95	0	3	0	98
Total Volume	9	102	206	0	317	0	2	15	0	17	16	192	2	0	210	437	2	13	0	452
% App. Total	2.8	32.2	65	0		0	11.8	88.2	0		7.6	91.4	1	0		96.7	0.4	2.9	0	
PHF	.563	.729	.817	.000	.801	.000	.250	.536	.000	.607	.667	.857	.250	.000	.847	.815	.250	.650	.000	.831

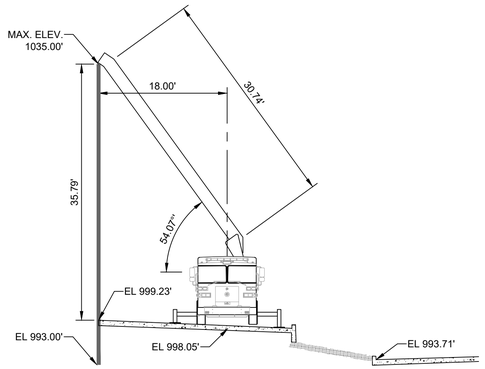

1 POSITION 1 ELEVATION VIEW

0 5' 10' 20'

SCALE: 1" = 10'

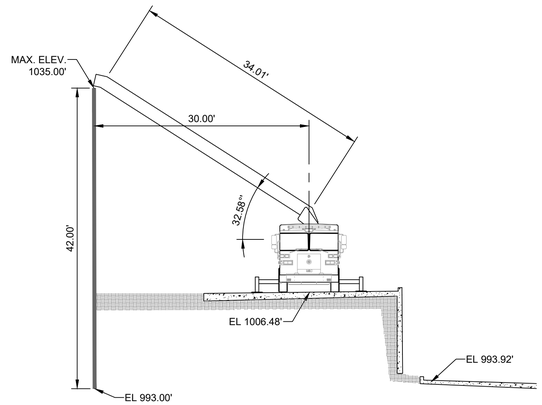

2 POSITION 2 ELEVATION VIEW

0 5' 10' 20'

SCALE: 1" = 10'

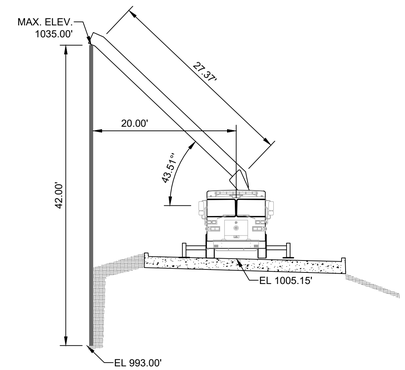

3 POSITION 3 ELEVATION VIEW

0 5' 10' 20'

SCALE: 1" = 10'

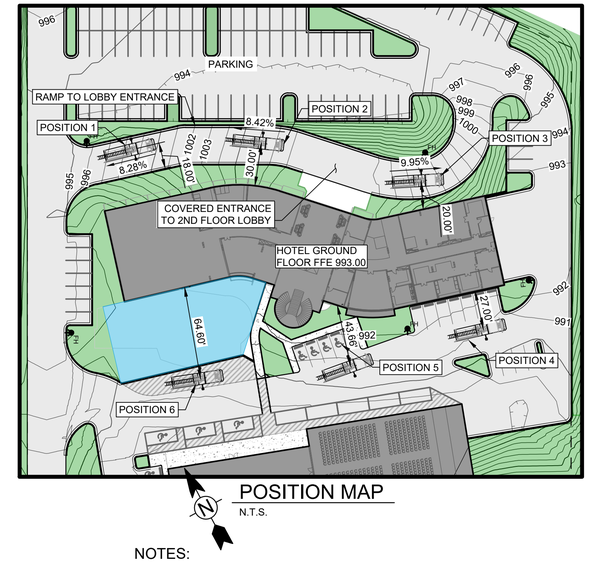

POSITION MAP

N.T.S.

NOTES:

1. ALL ELEVATIONS SHOWN ARE APPROXIMATE.
2. OUTRIGGERS ARE SHOWN AT FULL EXTENSION.
3. LADDER EXTENSION NOT TO EXCEED 75'
4. TRUCK SHOWN IS BASED OFF DATA DOWNLOADED FOR SUTPHEN MODEL SL75 FROM THE MANUFACTURER'S WEB SITE ON 05/30/2025.

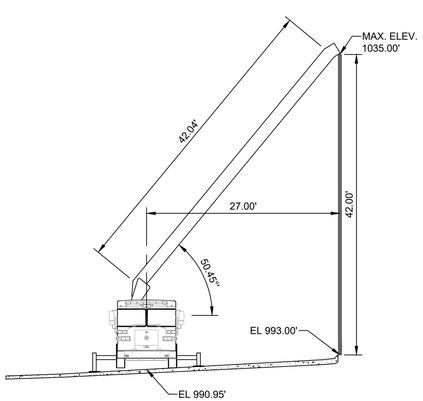

4 POSITION 4 ELEVATION VIEW

0 5' 10' 20'

SCALE: 1" = 10'

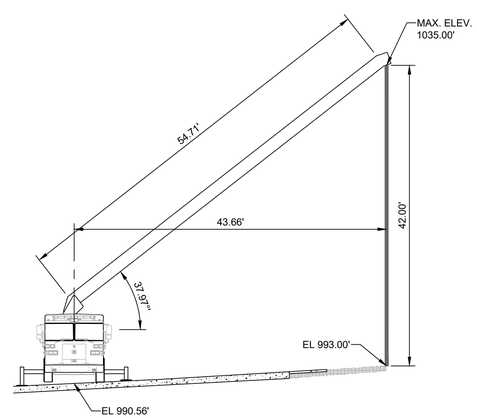

5 POSITION 5 ELEVATION VIEW

0 5' 10' 20'

SCALE: 1" = 10'

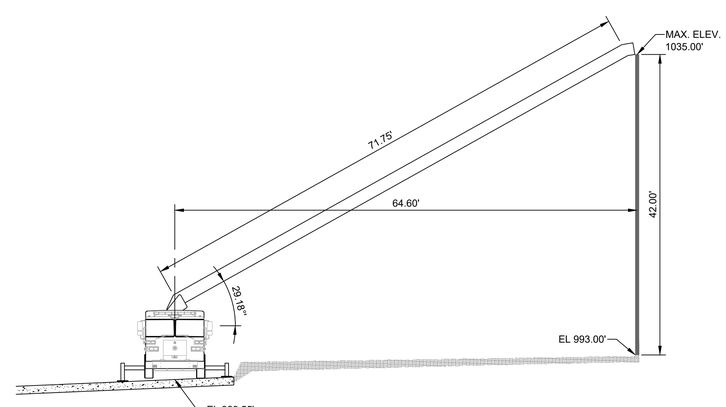

6 POSITION 6 ELEVATION VIEW

0 5' 10' 20'

SCALE: 1" = 10'

STATE OF TEXAS
WILLIAM E. PARNELL
121598
LICENSED
PROFESSIONAL ENGINEER
03/25/26

parnell engineering
www.parnellengineeringinc.com
500 E. WHITESTONE BLVD (#1419)
CEDAR PARK, TX 78613
512-431-8411
TEXAS REGISTRATION FIRM NO. F-19566

MARK	DATE	DESCRIPTION	BY

LAVERNE DEVELOPERS
VISTA VERDE RESORT HOTEL
19708 BOGGY FORD ROAD, LAGO VISTA, TEXAS 78645

VERTICAL FIRE ACCESS ELEVATIONS

Project No:
Designed By:
Drawn By:
Checked By:

F1

Sheet of 29

File No: 2511.01 ########

Copyright: Parnell Engineering

Bar Measures 1 inch, otherwise drawing not to scale

3/25/2026 11:26:41 AM - J:\2511_LAVERNE DEVELOPERS\2511.01 VISTA VERDE RESORT HOTEL\CAD\EXHIBITS\F1 VERTICAL FIRE ACCESS ELEVATIONS.DWG - MIKE RECTOR

AGENDA ITEM NO. VIII.3

Item Cover Page

CITY COUNCIL AGENDA ITEM REPORT

DATE: May 21, 2026

SUBMITTED BY: Robin Smith, City Secretary

SUBJECT: Approve the minutes of the May 6, 2026, City Council called meeting.

RECOMMENDATION: Approval of the May 6, 2026, City Council Called Meeting Minutes.

ATTACHMENTS:
26-05-06- Draft Minutes.pdf

CITY COUNCIL
SPECIAL CALLED MEETING
MINUTES
WEDNESDAY, MAY 6, 2026
4:30 PM
CITY COUNCIL CHAMBERS
5803 THUNDERBIRD
LAGO VISTA, TX

Shane Saum, Mayor
Adam Benefield, Member
Norma Owen, Mayor Pro Tem
Paul Prince, Member
Amanda Chavarria, Member
Karen Van Ness, Member
Jess Hall, Member

Charles West, City Manager
Brad Bullock, City Attorney

Present: Mayor Saum, Adam Benefield, Norma Owen, Paul Prince, Amanda Chavarria, Karen Van Ness, Jess Hall, Charles West, Brad Bullock; Karen Van Ness joined the meeting virtually.

JOIN MEETING VIA VIDEO CONFERENCE

Please join my meeting from your computer, tablet or smartphone.
https://meet.goto.com/242387805
You can also dial in using your phone.
Access Code: 242-387-805
United States: +1 (646) 749-3122

I. CALL TO ORDER, CALL OF ROLL

Shane Saum, Mayor
Amanda Chavarria, Council Member
Jess Hall, Council Member
Adam Benefield, Council Member
Norma Owen, Mayor Pro Tem
Karen Van Ness, Council Member
Paul Prince, Council Member

Mayor Saum called the meeting to order at 4:30 pm.

II. EXECUTIVE SESSION

Convene into a closed Executive Session pursuant to:

Prior to Executive Session, citizen comments were received from Lynda Aird and Gene Harris. After Executive Session, citizen comments were received from Robert Owen.

1. Consultation with City Attorney concerning legal questions and advice related to proposed updates/amendments to the City Charter following review by legal counsel pursuant to Texas Government Code Section 551.071.

III. ACTION ON EXECTUIVE SESSION ITEMS (action and/or a vote may be taken on the following agenda items)

Reconvene from Executive Session into open session and discuss/act, as deemed appropriate in City Council's discretion regarding:
Council reconvened from Executive Session at 5:15 pm.

1. Discussion and/or action concerning legal questions and advice related to proposed updates/amendments to the City Charter following review by legal counsel pursuant to Texas Government Code Section 551.071.

Moved by Norma Owen; seconded by Paul Prince to Authorize *City Attorney, Brad Bullock to discuss information that was discussed in Executive Session and to release next set of approved information to the discussion board.*

Motion Passed: 7- 0

Voting For: Mayor Saum, Adam Benefield, Norma Owen, Paul Prince, Amanda Chavarria, Karen Van Ness, Jess Hall

Voting Against: None

IV. ADJOURNMENT

Mayor Saum adjourned the meeting at 6:29 pm.

CITY OF LAGO VISTA:

_____
Norma Owen, Mayor Pro Tem

ATTEST:

_____
Robin Smith, City Secretary

On a motion by Councilmember _____, seconded by Councilmember _____, the above and foregoing instrument was passed and approved.

AGENDA ITEM NO. VIII.4

Item Cover Page

CITY COUNCIL AGENDA ITEM REPORT

DATE: May 21, 2026

SUBMITTED BY: Robin Smith, City Secretary

SUBJECT: Approve the minutes of the May 7, 2026, City Council Meeting .

RECOMMENDATION: Approval of the May 7, 2026, City Council Meeting Minutes.

ATTACHMENTS:
26-05-07 CC-draft minutes.pdf

CITY COUNCIL
REGULAR MEETING MINUTES
THURSDAY, MAY 7, 2026
3:00 PM
CITY COUNCIL CHAMBERS
5803 THUNDERBIRD
LAGO VISTA, TX

Mayor Saum, Mayor
Adam Benefield, Member
Norma Owen, Mayor Pro Tem
Paul Prince, Member
Amanda Chavarria, Member
Karen Van Ness, Member
Jess Hall, Member

Charles West, City Manager
Brad Bullock, City Attorney

Present: Adam Benefield, Norma Owen, Paul Prince, Amanda Chavarria, Karen Van Ness, Jess Hall, Charles West, Brad Bullock Absent: Mayor Saum

REGULAR SESSION WILL RECONVENE AT 4:00PM

JOIN MEETING VIA VIDEO CONFERENCE

Please join my meeting from your computer, tablet or smartphone.
https://meet.goto.com/242387805
You can also dial in using your phone.
Access Code: 242-387-805
United States: +1 (646) 749-3122

I. CALL TO ORDER, CALL OF ROLL

Meeting called to order at: 3:00 pm; excused absence Mayor Shane Saum

Shane Saum, Mayor
Amanda Chavarria, Council Member
Jess Hall, Council Member
Adam Benefield, Council Member
Norma Owen, Mayor Pro Tem
Karen Van Ness, Council Member
Paul Prince, Council Member

II. EXECUTIVE SESSION

Convene into a closed Executive Session pursuant to; *convened into Executive Session at 3:02 pm*

1. Consultation with City Attorney concerning all regular meeting agenda items requiring confidential, attorney/client advice (as needed) pursuant to Texas Government Code Section 551.071.
   No Action

2. Consultation with City Attorney pursuant to Government Code Sec. 551.071 to discuss and consider authorization for the issuance of an administrative subpoena for purposes of data collection.
   No Action

3. Consult with City Attorney concerning the purchase of property Pursuant to Texas Government Code Section 551.072.
   No Action

4. Consultation with City Attorney pursuant to Texas Government Code Section 551.071 to discuss and receive legal advice regarding the Airport Maintenance Agreement.
   No Action

5. Consultation with City Attorney pursuant to Texas Government Code Section 551.071 to discuss and receive legal advice regarding the Tessera Maintenance Agreement.
   No Action

6. Consultation with City Attorney regarding update on Cause No. D-1-GN-23-001164, Caelum Capital, LLC v. City of Lago Vista (Texas Gov't Code Sec. 551.071).
   No Action

III. ACTION ON EXECUTIVE SESSION ITEMS (action and/or vote may be taken on the following agenda items):

Reconvene from Executive Session into open session to act as deemed appropriate in City Council's discretion regarding:

City Council reconvened from Executive Session at 4:06 pm.
City Attorney, Brad Bullock briefed citizens on items discussed in Executive Session.

1. Consultation with City Attorney concerning all regular meeting agenda items requiring confidential, attorney/client advice (as needed) pursuant to Texas Government Code Section 551.071.
   No Action

2. Consultation with City Attorney pursuant to Government Code Sec. 551.071 to discuss and consider authorization for the issuance of an administrative subpoena for purposes of data collection.
   No Action

3. Consult with City Attorney concerning the purchase of property Pursuant to Texas Government Code Section 551.072.
   No Action

4. Consultation with City Attorney pursuant to Texas Government Code Section 551.071 to discuss and receive legal advice regarding the Airport Maintenance Agreement.
   No Action

5. Consultation with City Attorney pursuant to Texas Government Code Section 551.071 to discuss and receive legal advice regarding the Tessera Maintenance Agreement.
   No Action

6. Consultation with City Attorney regarding update on Cause No. D-1-GN-23-001164, Caelum Capital, LLC v. City of Lago Vista (Texas Gov't Code Sec. 551.071).
   No Action

IV. INVOCATION

Invocation led by Ken Lowry.

V. PLEDGE OF ALLEGIANCE, PLEDGE TO TEXAS FLAG

Mayor Pro Tem read two proclamations recognizing National Police Week and National Public Works Week.

VI. CITIZEN COMMENTS

In accordance with the Open Meetings Act, Council is prohibited from acting or discussing (other than factual responses to specific questions) any items not on the agenda.

Citizen comments received by David VonOhlerking and Nan Nesmith

VII. CONSENT AGENDA

All matters listed under Consent Agenda are to be considered routine by the City Council and will be enacted by one motion. There will not be separate discussion on these items. If discussion is desired, that item will be removed from the consent agenda and will be considered separately.

1. Consideration and possible action to amend the building permit extension fees for a residential construction permit issued for property located at 1307 Robin Trail.

   Moved by Adam Benefield; seconded by Jess Hall to Approve third extension at $2336.00, valid for 180 days. Future extensions will be at the current rate at the time of application.

   Motion Passed: 6- 0

   Voting For: Adam Benefield, Norma Owen, Paul Prince, Amanda Chavarria, Karen Van Ness, Jess Hall

   Voting Against: None

2. Action regarding the April 16, 2026, City Council Meeting Minutes.

   Moved by Paul Prince; seconded by Karen Van Ness to Approve.

   Motion Passed: 6- 0

   Voting For: Adam Benefield, Norma Owen, Paul Prince, Amanda Chavarria, Karen Van Ness, Jess Hall

   Voting Against: None

3. Consideration and possible action to approve the revisions to the City's Human Resources policies.

   Moved by Paul Prince; seconded by Karen Van Ness to Approve.

   Motion Passed: 6- 0

Voting For: Adam Benefield, Norma Owen, Paul Prince, Amanda Chavarria, Karen Van Ness, Jess Hall

Voting Against: None

4. Consideration and possible action regarding the appointment of Council Member Amanda Wilson-Chavarria to the Short-Term Rental Sub-Committee.

Moved by Paul Prince; seconded by Karen Van Ness to Approve.

Motion Passed: 6- 0

Voting For: Adam Benefield, Norma Owen, Paul Prince, Amanda Chavarria, Karen Van Ness, Jess Hall

Voting Against: None

5. Consideration and possible action to approve Ordinance No. 26-05-07-04; adopt the amended Rules of Procedure for the City Council, Boards, and Commissions.

Moved by Adam Benefield; seconded by Amanda Chavarria to Approve as Amended to approve with additions: 1) Two Council members can add an action item to agenda, added 3.06 to Rules of procedure 2) Censorship added (6.05) Rules of procedure

Motion Passed: 6- 0

Voting For: Adam Benefield, Norma Owen, Paul Prince, Amanda Chavarria, Karen Van Ness, Jess Hall

Voting Against: None

VIII. ACTION ITEMS

1. Consideration and possible action on Ordinance No. 26-05-07-03; the rezoning of 19708 Boggy Ford Road, ABS189 SUR 98 CAMPBELL M F ACR 7.055 (AKA LOT 32 RAN CHOL CIELO) from TR-1 to a Planned Development District Rezoning pursuant to Section 10 Chapter 14 of the City of Lago Vista Code of Ordinances. **25-2905-PDD-REZ**
Director of Development Services, Jordan Strohmeyer updates City Council on the item. Kevin Sullivan presents presentation for Developer.
Citizen Comments received by; Enrique Lopez, Constance Mendez, David VonOhlerking, Robert Ruggiero, Sally Ruggiero, Gene Harris, and David Williams.
City Council and Staff discuss the item prior to voting. Councilor Benefield would like to be on the record for his reasoning for his vote.

Moved by Adam Benefield; seconded by Paul Prince to Approve as Amended.

Municipal Utility Service Agreement, which states a building permit for the primary structure must be issued within 48 months or the PDD will be canceled.
No tree mitigation.
Ensure all the tables have been corrected, which I believe they have.
Add a sidewalk during construction.
Sidewalks need to be added with the language "contiguous" instead of "contagious."
Loading and unloading are out of view.
Second entrance if/when available connecting to Lohman.
Deceleration lane added on the developer's property.
Exhibit B-1 correctly reflects the main building's square footage as 73,116 and the event center's square footage as 27,842. Update the exhibits and correctly reflect in Ordinance Section 6.1.A that the 73,116 number should be used instead of 50,000.
All irrigation shall be installed utilizing purple non-potable system piping so, if and when Type 1 water is available, they will be required to utilize this water for irrigation.
Building height cannot exceed 42' and they cannot exceed an overall elevation of 1035.
Parking Light Screening Evergreen landscaping around the perimeter of the parking lot with foliage to down to the ground.
2 units per casita.

Motion Passed: 6- 0

Voting For: Adam Benefield, Norma Owen, Paul Prince, Amanda Chavarria, Karen Van Ness, Jess Hall

Voting Against: None

2. Consideration and possible action awarding Irrigation proposal for RFP 26-03 Cedar Breaks Irrigation Repair and authorizing City Manager to Execute Agreement.

Moved by Karen Van Ness; seconded by Amanda Chavarria to Approve award Aquaflow Irrigation and authorize City Manager to execute the contract.

Motion Passed: 6- 0

Voting For: Adam Benefield, Norma Owen, Paul Prince, Amanda Chavarria, Karen Van Ness, Jess Hall

Voting Against: None

3. Discussion, Consideration, and Possible Action on a Municipal Service Plan for the Annexation Of 4.949 Acres Also Known As Lot 27, Travis Hollow, Section Two, According To The Map Or Plat Thereof, Recorded In Volume 78, Page 398, Plat Records, Travis County, Texas; Save And Except That Portion Conveyed To Travis County, Texas, Recorded In Volume 10662, Page 402, Real Property Records, Travis County, Texas ETJ, Located At 7301 Lohman Ford Road In Lago Vista Texas 78645 And Adjacent To The City Of Lago Vista Municipal Limits

Moved by Amanda Chavarria; seconded by Paul Prince to

Approve. Motion Passed: 6- 0

Voting For: Adam Benefield, Norma Owen, Paul Prince, Amanda Chavarria, Karen Van Ness, Jess Hall

Voting Against: None

4. Discussion and possible referral to the Planning and Zoning Commission to ensure any and all zoning provision are in compliance with HB 2844 Relating to the regulation of food service establishments, including retail food stores and mobile food vendors; requiring an occupational license; imposing fees; authorizing an administrative penalty.
Tabled for staff to research.

5. Consideration and possible action to establish a Citizen Recognition Subcommittee for the purpose of selecting and recognizing a Citizen of the Month, Citizen of the Year, and other community members as appropriate.
Direction given to speak with Presidents Council.

Moved by Paul Prince; seconded by Jess Hall to Table.

Motion Tabled: 4- 2

Voting For: Norma Owen, Paul Prince, Karen Van Ness, Jess Hall

Voting Against: Adam Benefield, Amanda Chavarria

6. Consideration and possible action to approve Ordinance No. 26-05-07-01; adopting the 2024 International Property Maintenance Code.

Moved by Amanda Chavarria; seconded by Karen Van Ness to Approve.

Motion Passed: 6- 0

Voting For: Adam Benefield, Norma Owen, Paul Prince, Amanda Chavarria, Karen Van Ness, Jess Hall

Voting Against: None

7. Consideration and possible action on Ordinance No. 26-05-07-02 Of The City Of Lago Vista, Texas, Amending Chapter 3 Of The Code Of Ordinances, Including Article 3.100, Section 3.106 ("Building And Fire Codes") And Section 3.110 ("Permits And Approvals"); Adopting The 2021 International Pool Code; Establishing Amended Permit Expiration, Extension, And Renewal Procedures And Related Fees; Providing Findings Of Fact; Providing A Savings Clause; Providing A Severability Clause; Providing A Repealer Clause; Providing An Effective Date; Providing A Projects In Transition Clause; Providing For Codification And Publication; And Providing An Open Meetings Clause.

Moved by Amanda Chavarria; seconded by Karen Van Ness to Table
Table and bring back on the June 4th or June 18th agenda as work session item.

Motion Tabled: 6- 0

Voting For: Adam Benefield, Norma Owen, Paul Prince, Amanda Chavarria, Karen Van Ness, Jess Hall

Voting Against: None

IX. WORK SESSION

1. Discussion regarding the Bunker Bar & Grill lease agreement.
Dustin with the Bunker Bar & Grill speaks to Council requesting to extend lease.
Council directs City Manager, Charles West, to negotiate lease with Dustin.

2. Discussion regarding permitting cost & delays at the request of Pendora Homes, LLC.
City Manager, Charles West and Director of Development Services, Jordan Strohmeyer updates City Council on this item.
Citizen Comments received by David VonOhlerking, Ebz VonOhlerking, Mario Thomas and Paul Roberts.
Victor Manzeno gives update to City Council on the project.
City Council gives staff direction.

3. Discussion regarding the creation of a Public Safety Committee.
Amanda Chavarria, Chief Joy and City Council discuss forming a Public Safety Committee.

4. Discussion and possible action that the City of Lago Vista provide lifeguards during general public operation hours of the Lakeside at Tessera pool during 2026.
Councilor Hall opens the discussion.
City Council convenes into Executive Session at 10:38 pm.
Reconvened into open session at 11:16 pm.

No Action.

X. ITEMS OF COMMUNITY INTEREST

No comments

XI. STAFF AND COUNCIL LIAISON REPORTS

A. Routine Reports from City Staff.

B. Routine Reports from City Council Board/Commission/Committee Liaisons.

& *City Manager, Charles West gives update on revenues and expenditures.*
Councilor Chavarria updates on the Building & Standards Commission; Keep Lago Vista Beautiful raised $1,000 at tree event. The Youth Advisory Committee. donated money to Keep Lago Vista Beautiful.
Mayor Pro Tem Owen gave Infrastructure planning committee update.

XII. ADJOURNMENT

Norma Owen, Mayor Pro Tem Adjourned the meeting at 11:20 pm.

CITY OF LAGO VISTA:

_____
Norma Owen, Mayor Pro Tem

ATTEST:

_____
Robin Smith, City Secretary

On a motion by Councilmember _____, seconded by Councilmember _____, the above and foregoing instrument was passed and approved.

AGENDA ITEM NO. IX.1

Item Cover Page

CITY COUNCIL AGENDA ITEM REPORT

DATE: May 21, 2026

SUBMITTED BY: Jordan Strohmeyer, Development Services

SUBJECT: Consider, discuss, and take action on Ordinance No. 26-05-21-01 for the Unified Fee Schedule with Updates to the Development Services Department Fees.

BACKGROUND: The City currently operates a hybrid Development Services model consisting of limited in-house staffing supplemented by third-party consultants for plan review, inspections, and technical review functions. While this approach has allowed the City to process development activity with constrained staffing levels, it has resulted in several ongoing operational and fiscal challenges:

- Multiple review cycles and extended processing timelines
- Higher per-application costs driven by contractual markups and minimum billing thresholds
- Limited ability to control workflow, prioritization, and response times
- Inconsistent review outcomes due to fragmented responsibilities
- Reduced internal capacity for compliance review and enforcement

In peer cities, these functions are typically performed internally through fee-supported staffing models. Those models provide greater consistency, improved customer service, clearer accountability, and more predictable cost recovery for applicants.

B. Statutory and Regulatory Requirements

Under Texas Local Government Code (TLGC) Chapters 211, 212, 213, and 214, municipalities are required to:

- Review and act on zoning, platting, site development, and building applications within defined statutory timeframes
- Ensure reviews and inspections are conducted by qualified and credentialed personnel
- Maintain public records, notification procedures, and consistent administrative processes
- Enforce adopted development regulations and building codes

The City's current reliance on third-party services to perform

functions that are statutorily required and routinely handled internally in peer jurisdictions limits the City's ability to consistently meet statutory timelines, particularly during periods of increased development activity.

FINDINGS:

Fee Study Summary

The proposed FY26 Development Services Fee Schedule was developed through an internal cost-of-service and operational review conducted by Development Services staff. The review evaluated:

- Current application processing workflows;
- Staff and consultant time associated with permit and development review activities;
- Inspection and administrative processing requirements;
- Technology and operational support costs;
- Existing General Fund subsidy levels; and
- Regional development fee practices.

The analysis focused on aligning fees with the actual cost of providing development-related services while improving transparency, consistency, and predictability for applicants. The proposed fee schedule is not structured as a revenue-generation mechanism, but rather as a cost recovery tool intended to offset the reasonable administrative, technical, and operational expenses associated with development review and permitting activities.

Peer City Comparison

As part of the review process, staff evaluated development-related fee schedules from comparable Central Texas jurisdictions, including communities with similar:

- Population size;
- Development activity;
- Geographic constraints;
- Tourism and lake-oriented development characteristics; and
- Service delivery models.

The review generally found that:

- Most routine permit and inspection fees proposed for FY26 remain at or below peer city averages;
- Larger increases are primarily associated with complex technical reviews requiring significant staff and consultant

coordination;
- Several services currently performed by the City either do not have corresponding fees or are substantially under-recovered under the existing schedule.

Peer review also indicated that many comparable municipalities have transitioned toward more comprehensive fee-supported development services models in order to reduce General Fund subsidy of private development activity.

Staff and Consultant Cost Explanation

The proposed fee schedule reflects the actual staff and consultant resources required to process development applications, permits, inspections, and technical reviews.

Development review activities routinely involve:

- Permit intake and processing;
- Technical plan review;
- Building and infrastructure inspections;
- Engineering coordination;
- GIS and mapping support;
- Public notification and hearing preparation;
- Legal and administrative coordination; and
- Compliance verification and enforcement activities.

Under the City's current operational model, many technical functions continue to rely on third-party consultants. Consultant-supported reviews typically include direct hourly billing, minimum review thresholds, coordination costs, and administrative overhead, all of which contribute to the City's actual service delivery costs.

The proposed modernization framework is intended to gradually reduce reliance on third-party services by increasing internal capacity where operationally and fiscally appropriate.

Cost Recovery Statement

The proposed Development Services fees are intended to recover the reasonable costs associated with administering development-related regulations and services and are not intended to function as a general revenue source.

Fee revenues are intended to support:

- Statutory review obligations;
- Permit processing and inspections;
- Development-related staffing;

- Technical review functions;
- Administrative support activities; and
- Associated operational and technology costs.

The updated fee schedule is intended to reduce the ongoing subsidy of private development activity by the General Fund while maintaining fair, transparent, and predictable fees for applicants and residents.

RECOMMENDATION: Approve the updated FY26 Development Services Fee Schedule and provide direction regarding implementation of the Development Services Department modernization framework, staffing strategy, and annual fee review process.

ATTACHMENTS:
Fee Update Staff Report.docx
Peer City and Cost of Service Comparison.pdf
Ord. No. 26-05-21-01 Fee update.docx

Meeting Date: ***March 5th, 2026***
Department: Development Services
Re: Development Fee Update

Executive Summary

This report presents a comprehensive modernization of the City of Lago Vista's Development Services Department and a corresponding update to the City's adopted Development Services fee schedule. The purpose of these actions is to align staffing capacity with statutory requirements, bring core regulatory functions in-house, improve service delivery, and ensure that private development activity is funded through development fees rather than ongoing General Fund subsidy. The proposed FY26 fee schedule updates are based on:

- Cost-of-service analysis
- Workload and staffing assessment
- Review of statutory obligations under the Texas Local Government Code (TLGC Chapters 211–214)
- Regional market and peer city comparison

Even with the proposed updates, the majority of Development Services fees remain at or below peer city averages, particularly for routine permits, inspections, and administrative reviews. Higher fees are limited to complex technical services requiring substantial staff time and multi-disciplinary coordination. The updated fee structure improves clarity, transparency, and predictability for applicants; improves fairness for residents undertaking permitted work; reduces General Fund subsidy of private development; and provides fiscal relief that benefits other City departments. To ensure continued alignment with workload, statutory requirements, and market conditions, staff recommends that the Development Services fee schedule be reviewed annually and adopted in conjunction with the Department's annual operating budget.

Background and Existing Conditions

A. Current Operational Model

The City currently operates a hybrid Development Services model consisting of limited in-house staffing supplemented by third-party consultants for plan review, inspections, and technical review functions. While this approach has allowed the City to process development activity with constrained staffing levels, it has resulted in several ongoing operational and fiscal challenges:

- Multiple review cycles and extended processing timelines
- Higher per-application costs driven by contractual markups and minimum billing thresholds
- Limited ability to control workflow, prioritization, and response times
- Inconsistent review outcomes due to fragmented responsibilities
- Reduced internal capacity for compliance review and enforcement

In peer cities, these functions are typically performed internally through fee-supported staffing models. Those models provide greater consistency, improved customer service, clearer accountability, and more predictable cost recovery for applicants.

B. Statutory and Regulatory Requirements

Under Texas Local Government Code (TLGC) Chapters 211, 212, 213, and 214, municipalities are required to:

- Review and act on zoning, platting, site development, and building applications within defined statutory timeframes
- Ensure reviews and inspections are conducted by qualified and credentialed personnel
- Maintain public records, notification procedures, and consistent administrative processes
- Enforce adopted development regulations and building codes

The City's current reliance on third-party services to perform functions that are statutorily required and routinely handled internally in peer jurisdictions limits the City's ability to consistently meet statutory timelines, particularly during periods of increased development activity.

Department Modernization Strategy

A. Staffing Plan and Long-Range Capacity Framework

Based on updated workload projections, implementation sequencing, and anticipated development activity, staff recommends a five-year staffing plan of 13 full-time positions for the Development Services Department. This staffing level is intended to meet current statutory obligations, support internal plan review and inspection functions, and maintain service levels consistent with adopted development regulations. The Department's full operational capacity has been identified at 17 total positions, representing a complete supervisory and programmatic build-out. Rather than implementing all positions upfront, the recommended approach prioritizes direct service delivery while preserving flexibility to add management and program-level capacity as conditions warrant. The following positions are identified as future capacity positions and are not included in the initial five-year staffing plan:

- Planning Manager
- Building Official
- GIS Manager
- Program Manager
- Code Compliance Manager

These positions remain incorporated into the City's long-range budget model and organizational framework and may be added beyond the five-year horizon, or earlier, if development trends, regulatory complexity, or workload indicators demonstrate a sustained need.

B. Functional Areas and Responsibilities

Functional Area	Key Position(s)	Primary Function
Planning	Planner I, Administrative Assistant	Zoning and land use administration; subdivision and plat review; Comprehensive Plan implementation; policy interpretation
Building	Building Inspectors (2), Plan Reviewer, Permit Technician	Plan review and code compliance; residential and commercial inspections; permit issuance; certificates of occupancy
Engineering	City Engineer, Engineering Inspector	Infrastructure plan review (streets, drainage, utilities); construction inspections; technical coordination
GIS	GIS Technician	Mapping and spatial data management; zoning and infrastructure layers; permit tracking support
Program Support	Program Technician	Public education on zoning, permitting, STR compliance, and development timelines; guidance materials
Code Compliance	Code Compliance Specialists (2)	Investigation and enforcement of development-related violations; proactive compliance monitoring

Once fully implemented, this structure eliminates the need for routine third-party plan review and inspection contracts while improving service consistency and turnaround times.

C. Triggers for Additional Staffing Consideration

Transition from the recommended 13-position structure to full 17-position capacity would be evaluated based on measurable indicators, including:

- Sustained increases in annual development application volume beyond projected levels
- Repeated statutory timeline constraints or compliance risks
- Growth in complex development activity requiring multi-disciplinary coordination (e.g., PDDs, large plats, infrastructure-intensive projects)
- Expansion of GIS, code compliance, or public-facing program demands
- Demonstrated fee revenue stability sufficient to support additional positions without General Fund subsidy

General Fund Subsidy and Cost Recovery Conditions

The Development Services Department is structured to operate under a fee-based cost recovery model authorized by the Texas Local Government Code. However, the current fee structure does not recover the full cost of staff time, technology, and oversight required to process development applications. As currently structured, the General Fund continues to subsidize private development activity, including:

- Third-party plan review and inspection costs
- Staff time for application intake and processing
- Technical oversight of infrastructure construction
- Field inspections and reinspections
- Public hearing preparation and administrative support

Based on FY25 allocations, the department recovers less than 80% of its direct development-related labor costs through fees. The remaining costs, including benefits, overhead, and administrative support, are borne by taxpayers.

Fee Recoverability Analysis

A role-based analysis confirms that most Development Services positions perform work tied directly to development activity and are legally eligible for full or partial fee recovery under TLGC.

Division	Positions	Fully Recoverable	Partially Recoverable	Not Recoverable
Planning	3	3	0	0
Building	5	5	0	0
Engineering	2	2	0	0
GIS	2	0	2	0
Program Support	2	0	2	0
Code Compliance	3	0	3	0

FY26 Fee Schedule Update Overview

A. Structural Changes

The proposed FY26 fee schedule represents a structural modernization, not an across-the-board increase. Key changes include:

- Establishing fees for services previously provided without cost recovery
- Separating administrative, technical, and inspection services into distinct line items
- Increasing use of scaled and formula-based fees tied to project size and complexity
- Retaining existing fees where cost recovery is already appropriate

This structure improves transparency for applicants, reduces cross-subsidization for residents, and improves accounting clarity for the City. Even with these changes, the majority of fees remain below peer city averages.

B. Numerical Summary of Changes

A detailed line-item comparison of the FY25 adopted fee schedule and the proposed FY26 fee schedule shows:

- Over 60% of fee line items represent new fees for existing services
- Approximately 10–15% of fees reflect targeted adjustments
- Fewer than five fees were reduced
- Approximately one-third of fees remain unchanged

Most new fees fall within the $100–$250 range, with higher fees limited to complex technical reviews such as engineering, drainage, traffic, and large-scale subdivision activity.

Transparency Improvements and Permit Renewal Resolution

The proposed fee schedule significantly reduces reliance on the 115% cost pass-through model by replacing many variable charges with defined, up-front fees. This improves predictability for applicants and reduces administrative reconciliation. The updated schedule also resolves longstanding permit renewal issues by replacing percentage-based renewal fees with clearly defined flat renewal fees. These fees are tied to the actual administrative and review effort required, rather than the value of the original permit, improving fairness, consistency, and transparency for both developers and residents.

Annual Review and Budget Alignment

To ensure continued alignment with workload, staffing levels, statutory requirements, and peer practices, staff recommends that the Development Services fee schedule be reviewed annually and adopted concurrently with the Development Services Department's annual budget. Annual review allows the City to:

- Adjust fees based on verified cost-of-service data
- Respond to changing development trends and regulatory requirements
- Maintain consistency with peer jurisdictions
- Protect the General Fund over time

Fiscal and Operational Outcomes

By adopting the proposed FY26 fee schedule, the City can:

- Reduce or eliminate General Fund subsidy of private development
- Improve customer service and statutory review timelines
- Reduce reliance on third-party contractors
- Strengthen internal compliance and enforcement capacity
- Provide fiscal relief that benefits other City departments
- Support long-term financial and operational sustainability

Recommendation

Staff recommends approval of the FY26 Development Services Fee Schedule as presented and further recommends that the fee schedule be reviewed annually and adopted in conjunction with the Development Services Department's annual budget.

Adoption of the updated fee schedule modernizes the City's approach to development cost recovery, improves clarity and predictability for applicants, enhances fairness for residents, reduces taxpayer subsidy of private development, and supports long-term fiscal sustainability while meeting statutory obligations.

Category	Subcategory	Fee Item	FY25	FY26	$ Change	% Change	Peer Low	Peer High	Peer Average	Staff Hours	Cost of Service	Over/Under Cost	Over/Under
Addressing	Assignment	Address Assignment (Commercial, Multi-Family / Multi-Tenant, per building)	0	200	New Fee	New Fee	0	500	250	2.5	204.05	-4.05	-50
Addressing	Assignment	Address Assignment (Single)	0	100	New Fee	New Fee	0	250	125	1.25	102.025	-2.025	-25
Addressing	Change	Addressing Change Request (Renumbering)	0	100	New Fee	New Fee	0	150	75	1.25	102.025	-2.025	25
Addressing	Verification	Address Verification Letter	0	100	New Fee	New Fee	0	500	250	1.25	102.025	-2.025	-150
Administration & General	Agreements-Annual Review	Annual Reconciliation / Cost Participation Review	0	1250	New Fee	New Fee	0	5000	2500	15.25	1244.705	5.295	-1250
Administration & General	Agreements-Cost Sharing	Cost Sharing Agreement Review	0	1000	New Fee	New Fee	0	5000	2500	12	979.44	20.56	-1500
Administration & General	Agreements-Development	Development Agreement – Complex (PDD, MUD, large tracts)	50000	8250	New Fee	New Fee	2500	50000	26250	100	8162	88	-18000
Administration & General	Agreements-Development	Development Agreement (General Land Use)	0	3000	New Fee	New Fee	0	15000	7500	36.75	2999.535	0.465	-4500
Administration & General	Agreements-Development	Development Agreement Amendment	0	1250	New Fee	New Fee	0	5000	2500	15.25	1244.705	5.295	-1250
Administration & General	Agreements-Development	Development Agreement Termination / Release	0	850	New Fee	New Fee	0	5000	2500	10.5	857.01	-7.01	-1650
Administration & General	Agreements-Utilities	Off-Site Utility Agreement Review	0	2000	New Fee	New Fee	50	10000	5025	24	1958.88	41.12	-3025
Administration & General	Agreements-Utilities	Public Infrastructure Ownership / Transfer Agreement	0	2000	New Fee	New Fee	0	5000	2500	24	1958.88	41.12	-500
Administration & General	Agreements-Utilities	Utility Extension Agreement Review	0	2450	New Fee	New Fee	10	15000	7505	30	2448.6	1.4	-5055
Administration & General	Card	Credit / Debit Payment Fee	0.03	0.03	No Change	0	NPC	NPC	NPC	NPC	NPC	NPC	NPC
Administration & General	Check	NSF / Returned Check	30	30	No Change	0	NPC	NPC	NPC	NPC	NPC	NPC	NPC
Administration & General	Digital	Digital File Processing	0	50	New Fee	New Fee	0	75	37.5	0.5	40.81	9.19	12.5
Administration & General	Meeting	Development Pre-Application Meeting	500	500	No Change	0	NPC	NPC	NPC	NPC	NPC	NPC	NPC
Administration & General	Meeting	Technical Review Meeting (Follow-Up)	0	100	New Fee	New Fee	0	250	125	1.25	102.025	-2.025	-25
Administration & General	Records	Records Research (Non-PIA)	0	100	New Fee	New Fee	0	75	37.5	1.25	102.025	-2.025	62.5
Administration & General	Utility Capacity	Utility Capacity Check (Simple)	0	100	New Fee	New Fee	100	750	425	1.25	102.025	-2.025	-325
Administration & General	Utility Capacity	Utility Capacity Check (Complex Modeling)	0	500	New Fee	New Fee	100	2500	1300	6	489.72	10.28	-800
Administration & General	Utility Extension	Utility Extension Estimate	100	250	150	0.6	0	500	250	3	244.86	5.14	0
Airport	Lease	Tie-Down Lease (Monthly)	50	50	No Change	0	NPC	NPC	NPC	NPC	NPC	NPC	NPC
Airport	Parking	Tie-Down Daily	5	5	No Change	0	NPC	NPC	NPC	NPC	NPC	NPC	NPC
Airport	Parking	Overnight Parking	10	10	No Change	0	NPC	NPC	NPC	NPC	NPC	NPC	NPC
Airport	Permit	Runway Crossing Permit	50	50	No Change	0	NPC	NPC	NPC	NPC	NPC	NPC	NPC
Airport	Provider	Outside Service Provider	By Agreement	By Agreement	No Change	0	NPC	NPC	NPC	NPC	NPC	NPC	NPC
Alarm Systems	Alarms	False Alarm	50	50	No Change	0	NPC	NPC	NPC	NPC	NPC	NPC	NPC
Alarm Systems	Alarms	Initial Permit	35	35	No Change	0	NPC	NPC	NPC	NPC	NPC	NPC	NPC
Alarm Systems	Alarms	Renewal	25	25	No Change	0	NPC	NPC	NPC	NPC	NPC	NPC	NPC
Animal Control	Animal Control	Animal Transport Fee	0	100	New Fee	New Fee	0	75	37.5	1.25	102.025	-2.025	62.5
Animal Control	Animal Control	Dangerous Dog Registration	75	350	275	0.7857	$125 + $0.25/Sf	400	400	4.25	346.885	3.115	-50
Animal Control	Animal Control	Impoundment (Per Day)	15	50	35	0.7	0	500	250	0.5	40.81	0	-200
Animal Control	Animal Control	Neutered Dog / Cat License (Per Year)	10	50	40	0.8	0	150	75	0.5	40.81	9.19	-25
Animal Control	Animal Control	Owner Surrender Fee (Per Animal)	0	50	New Fee	New Fee	0	250	125	0.5	40.81	0	-75
Animal Control	Animal Control	Quarantine Fee (Daily)	0	50	New Fee	New Fee	0	75	37.5	0.5	40.81	0	12.5
Animal Control	Animal Control	Unneutered Dog / Cat License (Per Year)	20	50	30	0.6	0	200	100	0.5	40.81	9.19	-50
Annexation	Applications	Annexation	0	2250	New Fee	New Fee	0	7500	3750	27.5	2244.55	5.45	-1500
Building – Commercial	Demolition	Commercial Demolition	0	400	New Fee	New Fee	75	500	287.5	5	408.1	-8.1	112.5
Building – Commercial	Fences	Commercial Fence	0	400	New Fee	New Fee	75	475	275	5	408.1	-8.1	125
Building – Commercial	New Construction	Commercial Shell Building	$600 Review; $0.85/Sf	750	Varies	Varies	575	1250	912.5	9.25	754.985	-4.985	-162.5
Building – Commercial	New Construction	Core & Shell (Partial)	0	1500	New Fee	New Fee	75	2500	1287.5	18.5	1509.97	-9.97	212.5
Building – Commercial	New Construction	Industrial Facility	0	2500	New Fee	New Fee	0	12500	6250	30.5	2489.41	10.59	-3750
Building – Commercial	New Construction	Multi-Tenant New Build	0	2500	New Fee	New Fee	0	7750	3875	30.5	2489.41	10.59	-1375
Building – Other	Accessory Structures	Accessory >120 Sf	$125 + $0.25/Sf	350	Varies	Varies	125	1250	687.5	4.5	367.29	-17.29	-337.5

Building – Other	Accessory Structures	Accessory ≤120 Sf	50	200	150	0.75	50	750	400	2.5	204.05	-4.05	-200
Building – Other	Accessory Structures	Commercial Pool	600	650	50	0.0769	50	750	400	8	652.96	-2.96	250
Building – Other	Accessory Structures	Commercial Spa	400	550	150	0.2727	200	650	425	6.75	550.935	-0.935	125
Building – Other	Accessory Structures	Deck / Patio >100 Sf	150	450	300	0.6667	50	1250	650	5.5	448.91	1.09	-200
Building – Other	Accessory Structures	Deck / Patio ≤100 Sf	100	400	300	0.75	50	500	275	5	408.1	-8.1	125
Building – Other	Accessory Structures	Detached Garage	0	600	New Fee	New Fee	125	985	555	7.5	612.15	-12.15	45
Building – Other	Accessory Structures	Fences	75	350	275	0.7857	0	500	250	4.25	346.885	3.115	100
Building – Other	Accessory Structures	Irrigation	75	350	275	0.7857	50	500	275	4.25	346.885	3.115	75
Building – Other	Accessory Structures	Pool Barrier / Fence Review	0	100	New Fee	New Fee	25	250	137.5	1.25	102.025	-2.025	-37.5
Building – Other	Accessory Structures	Residential Pool	575	450	-125	-0.2778	150	500	325	5.5	448.91	1.09	125
Building – Other	Accessory Structures	Residential Spa	150	250	100	0.4	25	600	312.5	3	244.86	5.14	-62.5
Building – Other	MEP	Minor MEP Repair	25	100	75	0.75	50	100	75	1.25	102.025	-2.025	25
Building – Other	Other	Applicant Revision (Commercial)	0	200	New Fee	New Fee	150	1250	700	2.5	204.05	-4.05	-500
Building – Other	Other	Construction Trailer	0	200	New Fee	New Fee	250	1250	750	2.5	204.05	-4.05	-550
Building – Other	Other	Fireplace / Chimney	0	200	New Fee	New Fee	50	750	400	2.5	204.05	-4.05	-200
Building – Other	Other	Portable Building	0	200	New Fee	New Fee	125	1250	687.5	2.5	204.05	-4.05	-487.5
Building – Other	Other	Re-Review (Commercial)	0	250	New Fee	New Fee	150	500	325	3	244.86	5.14	-75
Building – Other	Other	Temporary Power	0	100	New Fee	New Fee	50	500	275	1.25	102.025	-2.025	-175
Building –	Renewals	Building Permit Renewal	Varies	750	New Fee	New Fee	75	1000	537.5	9.25	754.985	-4.985	212.5
Building – Other	Small Jobs	Small Job Permit	75	300	225	0.75	250	400	325	3.75	306.075	-6.075	-25
Building – Other	Solar	Solar Panels	250	500	250	0.5	250	1500	875	6	489.72	10.28	-375
Building – Other	Subcontractor	Subcontractor Renewal	50	200	150	0.75	50	500	275	2.5	204.05	-4.05	-75
Building – Other	Wells	Water Well	200	750	550	0.7333	120	1000	560	9.25	754.985	-4.985	190
Building – Residential	Additions	Additions	0	200	New Fee	New Fee	125	1250	687.5	2.5	204.05	-4.05	-487.5
Building – Residential	Conversions	Attic Conversion	0	500	New Fee	New Fee	125	750	437.5	6	489.72	10.28	62.5
Building – Residential	Multifamily	Multifamily	$600 Plan Review; $0.80/Sf	$750 Plan Review; $0.50/Sf	Varies	Varies	500	2500	1500	15	1224.3	Varies	Varies
Building – Residential	New Construction	Industrialized / Modular Home	$180 Plan Review; $0.75/Sf	$250 Plan Review; $0.50/Sf	Varies	Varies	2	1250	626	5	408.1	Varies	Varies
Building – Residential	New Construction	Manufactured Home Setup	$180 Plan Review; $820 Permit	1250	Varies	Varies	250	1750	1000	15.25	1244.705	5.295	250
Building – Residential	New Construction	SFR	$180 Plan Review; $0.75/Sf	$400 Plan Review; $0.50/Sf	Varies	Varies	150	750	450	10	816.2	Varies	Varies
Building – Residential	New Construction	SFR In Floodplain	$180 Plan Review; $0.75/Sf	$500 Plan Review; $0.50/Sf	Varies	Varies	150	750	450	15	1224.3	Varies	Varies
Building – Residential	Remodel	Remodel (No Additions)	$50 Plan Review; $0.20/Sf	100	Varies	Varies	50	250	150	1.25	102.025	-2.025	-50
Building – Residential	Remodel	Remodel (With Additions)	0	600	New Fee	New Fee	50	750	400	7.5	612.15	-12.15	200
Building – Residential	Structural	Foundation Repair Permit	0	100	New Fee	New Fee	120	150	135	1.25	102.025	-2.025	-35
Building – Residential	Structural	Window / Door Structural Replacement	0	250	New Fee	New Fee	50	500	275	3	244.86	5.14	-25
Certificates Of Occupancy	CO	All Others	150	250	100	0.4	150	750	450	3	244.86	5.14	-200
Certificates Of Occupancy	CO	Change Of Name / Owner	25	100	75	0.75	150	750	450	1.25	102.025	-2.025	-350
Certificates Of Occupancy	CO	Temporary (1–30 Days)	250	500	250	0.5	100	1500	800	6	489.72	10.28	-300
Certificates Of Occupancy	CO	Extension Of Temporary (31–60 Days)	500	750	250	0.3333	100	2500	1300	9.25	754.985	-4.985	-550
Contractor Registration	Contractor	Demolition Contractor	240	500	260	0.52	125	750	437.5	6	489.72	10.28	62.5
Contractor Registration	Contractor	General / Residential Contractor	240	500	260	0.52	125	500	312.5	6	489.72	10.28	187.5
Contractor Registration	Contractor	Home Improvement Contractor	120	250	130	0.52	125	750	437.5	3	244.86	5.14	-187.5

Contractor Registration	Contractor	Late Registration	0	50	New Fee	New Fee	0	75	37.5	0.5	40.81	9.19	12.5
Contractor Registration	Contractor	Reinstatement Appeal	350	750	400	0.5333	260	1500	880	9.25	754.985	-4.985	-130
Contractor Registration	Contractor	Tree Removal Contractor	120	250	130	0.52	$500 + $60/Hr	750	750	3	244.86	5.14	-500
Court	Administrative	Returned Check Fee	30	30	No Change	0	NPC	NPC	NPC	NPC	NPC	NPC	NPC
Court	Copies	Standard Copies	$0.10/Page	$0.10/Page	No Change	0	NPC	NPC	NPC	NPC	NPC	NPC	NPC
Court	Copies	Non-Standard Copies	$0.15/Page + Labor	$0.15/Page + Labor	No Change	0	NPC	NPC	NPC	NPC	NPC	NPC	NPC
Court	Mailing	Postal Expenses	Actual Cost	Actual Cost	No Change	0	NPC	NPC	NPC	NPC	NPC	NPC	NPC
Film	Application	Application Processing Fee	25	25	No Change	0	NPC	NPC	NPC	NPC	NPC	NPC	NPC
Film	Parking	Use Of City Lots/Streets (Per Block/Day)	50	50	No Change	0	NPC	NPC	NPC	NPC	NPC	NPC	NPC
Film	Row	Total Street Closure (Per Block/Day)	50	50	No Change	0	NPC	NPC	NPC	NPC	NPC	NPC	NPC
Film	Row	Partial Street Closure (Per Block/Day)	25	25	No Change	0	NPC	NPC	NPC	NPC	NPC	NPC	NPC
Film	Use	Total / Disruptive Use (Per Day)	500	500	No Change	0	NPC	NPC	NPC	NPC	NPC	NPC	NPC
Film	Use	Partial / Nondisruptive Use (Per Day)	250	250	No Change	0	NPC	NPC	NPC	NPC	NPC	NPC	NPC
Fire – Plan Review	Access	Fire Lane / Access Review	0	0	New Fee	New Fee	0	250	125	0	0	0	-125
Fire – Plan Review	Alarm	Fire Alarm Plan Review	$260 + Device Rates	$260 + Device Rates	No Change	0	NPC	NPC	NPC	NPC	NPC	NPC	NPC
Fire – Plan Review	Express	Express Fire Permit Review	100	100	No Change	0	NPC	NPC	NPC	NPC	NPC	NPC	NPC
Fire – Plan Review	Full Building	Commercial Fire Review (Full Building)	$750 + Per-Sf Formula	$750 + Per-Sf Formula	No Change	0	NPC	NPC	NPC	NPC	NPC	NPC	NPC
Fire – Plan Review	Hazardous Materials	Hazardous Materials Plan Review	0	0	New Fee	New Fee	0	75	37.5	0	0	0	-37.5
Fire – Plan Review	Kitchen Systems	Kitchen Hood Suppression Plan Review	0	0	New Fee	New Fee	0	75	37.5	0	0	0	-37.5
Fire – Plan Review	Knox	Knox Box Approval	0	0	New Fee	New Fee	0	75	37.5	0	0	0	-37.5
Fire – Plan Review	Pump	Fire Pump Plan Review	260	260	No Change	0	NPC	NPC	NPC	NPC	NPC	NPC	NPC
Fire – Plan Review	Special Projects	Special Project Review (Complex)	$500 + $60/Hr	$500 + $60/Hr	No Change	0	NPC	NPC	NPC	NPC	NPC	NPC	NPC
Fire – Plan Review	Sprinkler	Fire Sprinkler Plan Review	$260 + Head Rates	$260 + Head Rates	No Change	0	NPC	NPC	NPC	NPC	NPC	NPC	NPC
Fire – Plan Review	Standpipe	Standpipe Plan Review	260	260	No Change	0	NPC	NPC	NPC	NPC	NPC	NPC	NPC
Fire – Plan Review	Tanks	Fuel Tank Installation Review	0	0	New Fee	New Fee	0	75	37.5	0	0	0	-37.5
GIS Services	Data	Gis Data Request (Shapefile / Geodatabase / Pdf)	0	100	New Fee	New Fee	125	500	312.5	1.25	102.025	-2.025	-212.5
GIS Services	Development	Gis Support For Development Cases (Per Case)	0	200	New Fee	New Fee	125	500	312.5	2.5	204.05	-4.05	-112.5
GIS Services	Gis Services	Custom Mapping Service (Base Maps, Exhibits)	0	250	New Fee	New Fee	125	500	312.5	3	244.86	5.14	-62.5
GIS Services	Gis Services	Gis Layer Creation	0	250	New Fee	New Fee	125	500	312.5	3	244.86	5.14	-62.5
GIS Services	Gis Services	Map Revision Request (Major Update)	0	250	New Fee	New Fee	125	500	312.5	3	244.86	5.14	-62.5
GIS Services	Layers	Gis Layer Creation (Project-Specific)	0	250	New Fee	New Fee	125	500	312.5	3	244.86	5.14	-62.5
GIS Services	Qa/Qc	Gis Qa/Qc For Submitted Data (Developer Submittals)	0	200	New Fee	New Fee	125	500	312.5	2.5	204.05	-4.05	-112.5
Golf	Admin	Annual Handicap Fee	45	45	No Change	0	NPC	NPC	NPC	NPC	NPC	NPC	NPC
Golf	Cart	Daily – 18 Holes	25	25	No Change	0	NPC	NPC	NPC	NPC	NPC	NPC	NPC
Golf	Cart	Daily – 9 Holes	13	13	No Change	0	NPC	NPC	NPC	NPC	NPC	NPC	NPC
Golf	Cart	Annual – Single	1299.99	1299.99	No Change	0	NPC	NPC	NPC	NPC	NPC	NPC	NPC
Golf	Cart	Annual – Family	1799.99	1799.99	No Change	0	NPC	NPC	NPC	NPC	NPC	NPC	NPC
Golf	Cart	Semi-Annual – Single	674.99	674.99	No Change	0	NPC	NPC	NPC	NPC	NPC	NPC	NPC
Golf	Cart	Semi-Annual – Family	824.99	824.99	No Change	0	NPC	NPC	NPC	NPC	NPC	NPC	NPC
Golf	Cart	Monthly – Single	119.99	119.99	No Change	0	NPC	NPC	NPC	NPC	NPC	NPC	NPC
Golf	Cart	Monthly – Family	149.99	149.99	No Change	0	NPC	NPC	NPC	NPC	NPC	NPC	NPC
Golf	Daily	Weekday – Regular 18 Holes	48	48	No Change	0	NPC	NPC	NPC	NPC	NPC	NPC	NPC
Golf	Daily	Weekend – Regular 18 Holes	54	54	No Change	0	NPC	NPC	NPC	NPC	NPC	NPC	NPC
Golf	Daily	Senior Weekday (60+)	44	44	No Change	0	NPC	NPC	NPC	NPC	NPC	NPC	NPC
Golf	Daily	Senior Weekend (60+)	49	49	No Change	0	NPC	NPC	NPC	NPC	NPC	NPC	NPC
Golf	Daily	9-Hole Rate	31	31	No Change	0	NPC	NPC	NPC	NPC	NPC	NPC	NPC

Golf	Damage	Lost Key	25	25	No Change	0	NPC	NPC	NPC	NPC	NPC	NPC	NPC
Golf	Damage	Windshield	200	200	No Change	0	NPC	NPC	NPC	NPC	NPC	NPC	NPC
Golf	Damage	Totaled Cart	6900	6900	No Change	0	NPC	NPC	NPC	NPC	NPC	NPC	NPC
Golf	Damage	Other Damage	Actual Cost + 15%	Actual Cost + 15%	No Change	0	NPC	NPC	NPC	NPC	NPC	NPC	NPC
Golf	Junior	Junior Annual Pass	299.99	299.99	No Change	0	NPC	NPC	NPC	NPC	NPC	NPC	NPC
Golf	Junior	Junior Summer Pass	99.99	99.99	No Change	0	NPC	NPC	NPC	NPC	NPC	NPC	NPC
Golf	Junior	Junior Walking	10	10	No Change	0	NPC	NPC	NPC	NPC	NPC	NPC	NPC
Golf	Junior	Junior Riding	18	18	No Change	0	NPC	NPC	NPC	NPC	NPC	NPC	NPC
Golf	Pass	Annual – Single (No Cart)	899.99	899.99	No Change	0	NPC	NPC	NPC	NPC	NPC	NPC	NPC
Golf	Pass	Annual – Single (Private Cart)	1699.98	1699.98	No Change	0	NPC	NPC	NPC	NPC	NPC	NPC	NPC
Golf	Pass	Annual – Single (City Cart)	2199.98	2199.98	No Change	0	NPC	NPC	NPC	NPC	NPC	NPC	NPC
Golf	Pass	Annual – Family (No Cart)	1499.99	1499.99	No Change	0	NPC	NPC	NPC	NPC	NPC	NPC	NPC
Golf	Pass	Annual – Family (Private Cart)	2899.98	2899.98	No Change	0	NPC	NPC	NPC	NPC	NPC	NPC	NPC
Golf	Pass	Annual – Family (City Cart)	3299.98	3299.98	No Change	0	NPC	NPC	NPC	NPC	NPC	NPC	NPC
Golf	Pass	Annual – Junior (No Cart)	299.99	299.99	No Change	0	NPC	NPC	NPC	NPC	NPC	NPC	NPC
Golf	Pass	Monthly – Single (No Cart)	99.99	99.99	No Change	0	NPC	NPC	NPC	NPC	NPC	NPC	NPC
Golf	Pass	Monthly – Single (Private Cart)	169.98	169.98	No Change	0	NPC	NPC	NPC	NPC	NPC	NPC	NPC
Golf	Pass	Monthly – Single (City Cart)	219.98	219.98	No Change	0	NPC	NPC	NPC	NPC	NPC	NPC	NPC
Golf	Pass	Monthly – Family (No Cart)	179.99	179.99	No Change	0	NPC	NPC	NPC	NPC	NPC	NPC	NPC
Golf	Pass	Monthly – Family (Private Cart)	289.98	289.98	No Change	0	NPC	NPC	NPC	NPC	NPC	NPC	NPC
Golf	Pass	Monthly – Family (City Cart)	329.98	329.98	No Change	0	NPC	NPC	NPC	NPC	NPC	NPC	NPC
Golf	Pass	Semi-Annual – Single (No Cart)	549.99	549.99	No Change	0	NPC	NPC	NPC	NPC	NPC	NPC	NPC
Golf	Pass	Semi-Annual – Single (Private Cart)	949.98	949.98	No Change	0	NPC	NPC	NPC	NPC	NPC	NPC	NPC
Golf	Pass	Semi-Annual – Single (City Cart)	1224.98	1224.98	No Change	0	NPC	NPC	NPC	NPC	NPC	NPC	NPC
Golf	Pass	Semi-Annual – Family (No Cart)	999.99	999.99	No Change	0	NPC	NPC	NPC	NPC	NPC	NPC	NPC
Golf	Pass	Semi-Annual – Family (Private Cart)	1599.98	1599.98	No Change	0	NPC	NPC	NPC	NPC	NPC	NPC	NPC
Golf	Pass	Semi-Annual – Family (City Cart)	1824.98	1824.98	No Change	0	NPC	NPC	NPC	NPC	NPC	NPC	NPC
Golf	Punch Card	10 Rounds – Private Cart	270	270	No Change	0	NPC	NPC	NPC	NPC	NPC	NPC	NPC
Golf	Punch Card	10 Rounds – City Cart	300	300	No Change	0	NPC	NPC	NPC	NPC	NPC	NPC	NPC
Golf	Punch Card	25 Rounds – Private Cart	600	600	No Change	0	NPC	NPC	NPC	NPC	NPC	NPC	NPC
Golf	Punch Card	25 Rounds – City Cart	650	650	No Change	0	NPC	NPC	NPC	NPC	NPC	NPC	NPC
Golf	Range	Annual Range Pass	499.99	499.99	No Change	0	NPC	NPC	NPC	NPC	NPC	NPC	NPC
Golf	Range	Monthly Range Pass	49.99	49.99	No Change	0	NPC	NPC	NPC	NPC	NPC	NPC	NPC
Golf	Rental	Club Rental – 18 Holes	35	35	No Change	0	NPC	NPC	NPC	NPC	NPC	NPC	NPC
Golf	Rental	Club Rental – 9 Holes	20	20	No Change	0	NPC	NPC	NPC	NPC	NPC	NPC	NPC
Golf	Rider	Rider Fee	9	9	No Change	0	NPC	NPC	NPC	NPC	NPC	NPC	NPC
Golf	Trail	Daily – 18 Holes	9	9	No Change	0	NPC	NPC	NPC	NPC	NPC	NPC	NPC
Golf	Trail	Daily – 9 Holes	7.5	7.5	No Change	0	NPC	NPC	NPC	NPC	NPC	NPC	NPC
Golf	Trail	Annual – Single	799.99	799.99	No Change	0	NPC	NPC	NPC	NPC	NPC	NPC	NPC
Golf	Trail	Annual – Family	1399.99	1399.99	No Change	0	NPC	NPC	NPC	NPC	NPC	NPC	NPC
Golf	Trail	Semi-Annual – Single	399.99	399.99	No Change	0	NPC	NPC	NPC	NPC	NPC	NPC	NPC
Golf	Trail	Semi-Annual – Family	599.99	599.99	No Change	0	NPC	NPC	NPC	NPC	NPC	NPC	NPC
Golf	Trail	Monthly – Single	69.99	69.99	No Change	0	NPC	NPC	NPC	NPC	NPC	NPC	NPC
Golf	Trail	Monthly – Family	109.99	109.99	No Change	0	NPC	NPC	NPC	NPC	NPC	NPC	NPC
Golf	Twilight	Weekday Twilight	38	38	No Change	0	NPC	NPC	NPC	NPC	NPC	NPC	NPC
Golf	Twilight	Weekend Twilight	44	44	No Change	0	NPC	NPC	NPC	NPC	NPC	NPC	NPC

Golf	Twilight	Super Twilight	36	36	No Change	0	NPC	NPC	NPC	NPC	NPC	NPC	NPC
Green Center	Load	Pickup Load	25	25	No Change	0	NPC	NPC	NPC	NPC	NPC	NPC	NPC
Green Center	Pickup + Trailer	Pickup W/ Trailer ≤ 8'	50	50	No Change	0	NPC	NPC	NPC	NPC	NPC	NPC	NPC
Green Center	Pickup + Trailer	Pickup W/ Trailer > 8'	75	75	No Change	0	NPC	NPC	NPC	NPC	NPC	NPC	NPC
Green Center	Trailer	Trailer Load ≤ 8'	25	25	No Change	0	NPC	NPC	NPC	NPC	NPC	NPC	NPC
Green Center	Trailer	Trailer Load > 8'	50	50	No Change	0	NPC	NPC	NPC	NPC	NPC	NPC	NPC
Health Department	Annual	Annual Food Establishment Permit	350	500	150	0.3	150	1275	712.5	6	489.72	10.28	-212.5
Health Department	Health	Alcohol Release	25	100	75	0.75	150	750	450	1.25	102.025	-2.025	-350
Health Department	Health	Certified Food Manager Registration	0	50	New Fee	New Fee	50	250	150	0.5	40.81	9.19	-100
Health Department	Health	Change Of Ownership	100	400	300	0.75	50	750	400	5	408.1	-8.1	0
Health Department	Health	Farmers Markets	200	400	200	0.5	25	750	387.5	5	408.1	-8.1	12.5
Health Department	Health	Follow-Up Inspection	125	400	275	0.6875	25	650	337.5	5	408.1	-8.1	62.5
Health Department	Health	Food Handler Class (On-Site)	0	100	New Fee	New Fee	25	5000	2512.5	1.25	102.025	-2.025	-2412.5
Health Department	Health	Mobile Vendor Permit (Food Truck)	0	600	New Fee	New Fee	25	2250	1137.5	7.5	612.15	-12.15	-537.5
Health Department	Health	Mobile Vendors	150	600	450	0.75	50	1250	650	7.5	612.15	-12.15	-50
Health Department	Health	New Establishment	475	750	275	0.3667	275	2250	1262.5	9.25	754.985	-4.985	-512.5
Health Department	Health	Remodel Review	90	600	510	0.85	275	1500	887.5	7.5	612.15	-12.15	-287.5
Health Department	Health	Temporary Event Permit	0	200	New Fee	New Fee	25	500	262.5	2.5	204.05	-4.05	-62.5
Health Department	Health	Temporary Vendor Health Inspection	0	200	New Fee	New Fee	50	500	275	2.5	204.05	-4.05	-75
Health Department	Plan Review	Commercial Kitchen Plan Review	0	600	New Fee	New Fee	125	1275	700	7.5	612.15	-12.15	-100
Impact Fees	Roadway	Roadway Impact Fee – Service Area 1	2493	2493	No Change	0	NPC	NPC	NPC	NPC	NPC	NPC	NPC
Impact Fees		Roadway Impact Fee – Service Area 2	537	537	No Change	0	NPC	NPC	NPC	NPC	NPC	NPC	NPC
Impact Fees		Roadway Impact Fee Calculations:					NPC	NPC	NPC	NPC	NPC	NPC	NPC
Impact Fees		General Office (Per 1,000 Sf Gfa)……2.92					NPC	NPC	NPC	NPC	NPC	NPC	NPC
Impact Fees		Medical / Dental Office (Per 1,000 Sf Gfa)……..8.79					NPC	NPC	NPC	NPC	NPC	NPC	NPC
Impact Fees		U.S. Post Office (Per 1,000 Sf Gfa)……..8.53					NPC	NPC	NPC	NPC	NPC	NPC	NPC
Impact Fees							NPC	NPC	NPC	NPC	NPC	NPC	NPC
Impact Fees		Roadway Impact Fee Calculations:					NPC	NPC	NPC	NPC	NPC	NPC	NPC
Impact Fees		Single-Family Detached (Per Du)……3.19					NPC	NPC	NPC	NPC	NPC	NPC	NPC
Impact Fees		Du)……....1.8					NPC	NPC	NPC	NPC	NPC	NPC	NPC
Impact Fees		Mid-Rise W/ 1st-Floor Commercial (Per Du)……..1.16					NPC	NPC	NPC	NPC	NPC	NPC	NPC
Impact Fees		Senior Detached (Per Du)……0.96					NPC	NPC	NPC	NPC	NPC	NPC	NPC
Impact Fees		Assisted Living (Per Bed)……0.83					NPC	NPC	NPC	NPC	NPC	NPC	NPC
Impact Fees		Continuing Care Retirement (Per Du)……..0.51					NPC	NPC	NPC	NPC	NPC	NPC	NPC
Impact Fees	Wastewater	Wastewater Impact Fee (Per Service Unit)	2630	2630	No Change	0	NPC	NPC	NPC	NPC	NPC	NPC	NPC
Impact Fees	Water	Water Impact Fee (Per Service Unit)	3486	3486	No Change	0	NPC	NPC	NPC	NPC	NPC	NPC	NPC
Impact Fees	* Uncommon size; requires prior approval	Meter Size Calculation					NPC	NPC	NPC	NPC	NPC	NPC	NPC
Impact Fees		3/4" × 5/8" Meter.....1					NPC	NPC	NPC	NPC	NPC	NPC	NPC
Impact Fees		3/4" × 3/4" Meter*.....1					NPC	NPC	NPC	NPC	NPC	NPC	NPC
Impact Fees		1" Meter.....2.5					NPC	NPC	NPC	NPC	NPC	NPC	NPC
Impact Fees		Meter.....5					NPC	NPC	NPC	NPC	NPC	NPC	NPC
Impact Fees		2" Meter.....8					NPC	NPC	NPC	NPC	NPC	NPC	NPC
Impact Fees		3" Meter*.....16					NPC	NPC	NPC	NPC	NPC	NPC	NPC
Impact Fees		4" Meter.....25					NPC	NPC	NPC	NPC	NPC	NPC	NPC

Impact Fees		Meter.....5 0					NPC	NPC	NPC	NPC	NPC	NPC	NPC
Impact Fees		8" Meter.....16 0					NPC	NPC	NPC	NPC	NPC	NPC	NPC
Inspections	ADA	ADA / Sidewalk Inspection	0	100	New Fee	New Fee	0	750	375	1.25	102.025	-2.025	-275
Inspections	After-Hours	After-Hours Inspection	0	300	New Fee	New Fee	299.99	350	324.995	3.75	306.075	-6.075	-24.995
Inspections	Drainage	Storm Drainage Inspection	0	100	New Fee	New Fee	600	150	375	1.25	102.025	-2.025	-275
Inspections	Environmental	Erosion Control	0	100	New Fee	New Fee	99.99	150	124.995	1.25	102.025	-2.025	-24.995
Inspections	Infrastructure	Final Infrastructure	0	100	New Fee	New Fee	169.98	150	159.99	1.25	102.025	-2.025	-59.99
Inspections	Infrastructure	Warranty Infrastructure	0	100	New Fee	New Fee	150	750	450	1.25	102.025	-2.025	-350
Inspections	Inspection	Inspection	0	100	New Fee	New Fee	25	175	100	1.25	102.025	-2.025	0
Inspections	Inspections	Construction Inspections Fee	0.5% + 115% Cost	200	Varies	Varies	0	500	250	2.5	204.05	-4.05	-50
Inspections	Inspections	Utility Inspection	0	100	New Fee	New Fee	7.5	75	41.25	1.25	102.025	-2.025	58.75
Inspections	Reinspection	1st Reinspection	75	150	75	0.5	2199.98	400	1299.99	1.75	142.835	7.165	-1149.99
Inspections	Reinspection	2nd Reinspection	150	300	150	0.5	1499.99	600	1049.995	3.75	306.075	-6.075	-749.995
Inspections	Reinspection	3rd+ Reinspection	0	500	New Fee	New Fee	2899.98	1000	1949.99	6	489.72	10.28	-1449.99
Inspections	Third Party	Third-Party Inspection	115% Of Cost	115% Of Cost	No Change	0	NPC	NPC	NPC	NPC	NPC	NPC	NPC
Inspections	Water Heater	Water Heater Inspection	0	50	New Fee	New Fee	49.99	75	62.495	0.5	40.81	9.19	-12.495
Inspections	Weekend / Holiday	Weekend / Holiday Inspection	0	350	New Fee	New Fee	0	550	275	4.25	346.885	3.115	75
Inspections – Fire	After-Hours	After-Hours Fire Inspection	$90/Hr (2 Hr Min)	No Proposed Change	No Change	0	NPC	NPC	NPC	NPC	NPC	NPC	NPC
Inspections – Fire	Alarm	Fire Alarm Inspection	0	No Proposed Change	New Fee	New Fee	NPC	NPC	NPC	NPC	NPC	NPC	NPC
Inspections – Fire	Clearance	Fire Lane Clearance Inspection	0	No Proposed Change	New Fee	New Fee	NPC	NPC	NPC	NPC	NPC	NPC	NPC
Inspections – Fire	Hazardous Materials	Hazardous Materials Compliance Inspection	0	No Proposed Change	New Fee	New Fee	NPC	NPC	NPC	NPC	NPC	NPC	NPC
Inspections – Fire	Hydrant	Hydrant Flow / Flush Test	0	No Proposed Change	New Fee	New Fee	NPC	NPC	NPC	NPC	NPC	NPC	NPC
Inspections – Fire	Inspections	Fire Pump Inspection / Test	0	No Proposed Change	New Fee	New Fee	NPC	NPC	NPC	NPC	NPC	NPC	NPC
Inspections – Fire	Inspections	Fire Reinspection (Standard)	0	No Proposed Change	New Fee	New Fee	NPC	NPC	NPC	NPC	NPC	NPC	NPC
Inspections – Fire	Inspections	Fire Sprinkler Inspection	0	No Proposed Change	New Fee	New Fee	NPC	NPC	NPC	NPC	NPC	NPC	NPC
Inspections – Fire	Inspections	Fuel Tank Installation Inspection	0	No Proposed Change	New Fee	New Fee	NPC	NPC	NPC	NPC	NPC	NPC	NPC
Inspections – Fire	Inspections	Kitchen Hood Suppression Inspection	0	No Proposed Change	New Fee	New Fee	NPC	NPC	NPC	NPC	NPC	NPC	NPC
Inspections – Fire	Inspections	Operational Permits	$45 Ea	No Proposed Change	No Change	0	NPC	NPC	NPC	NPC	NPC	NPC	NPC
Inspections – Fire	Inspections	Reinspection	$60/Hr (2 Hr Min)	No Proposed Change	No Change	0	NPC	NPC	NPC	NPC	NPC	NPC	NPC
Inspections – Fire	Inspections	Standby Personnel	$60/Hr–$90 /Hr	No Proposed Change	No Change	0	NPC	NPC	NPC	NPC	NPC	NPC	NPC
Inspections – Fire	Inspections	Standpipe Inspection	0	No Proposed Change	New Fee	New Fee	NPC	NPC	NPC	NPC	NPC	NPC	NPC
Inspections – Health	Annual	Routine Annual Inspection	0	100	New Fee	New Fee	NPC	NPC	NPC	NPC	NPC	NPC	NPC
Inspections – Health	Follow-Up	Follow-Up Health Inspection	125	150	25	0.1667	NPC	NPC	NPC	NPC	NPC	NPC	NPC
Inspections – Health	Inspection	Pre-Opening Inspection	0	100	New Fee	New Fee	NPC	NPC	NPC	NPC	NPC	NPC	NPC
Inspections – Health	Inspections	Mobile Food Unit Inspection	0	100	New Fee	New Fee	NPC	NPC	NPC	NPC	NPC	NPC	NPC
Inspections – Health	Inspections	Reinspection After Violations	0	100	New Fee	New Fee	NPC	NPC	NPC	NPC	NPC	NPC	NPC
Inspections – Parkland	Inspections	Greenbelt Improvements Inspection	0	100	New Fee	New Fee	NPC	NPC	NPC	NPC	NPC	NPC	NPC
Inspections – Parkland	Inspections	Park Improvement Inspection	0	100	New Fee	New Fee	NPC	NPC	NPC	NPC	NPC	NPC	NPC
Inspections – Parkland	Inspections	Parkland Final Acceptance Inspection	0	100	New Fee	New Fee	NPC	NPC	NPC	NPC	NPC	NPC	NPC
Inspections – Parkland	Inspections	Parkland Warranty Inspection	0	100	New Fee	New Fee	NPC	NPC	NPC	NPC	NPC	NPC	NPC
Inspections – Parkland	Inspections	Trail Construction / Alignment Inspection	0	100	New Fee	New Fee	NPC	NPC	NPC	NPC	NPC	NPC	NPC
Inspections – Tree Mitigation	Inspections	Tree Mitigation Final Inspection	0	100	New Fee	New Fee	NPC	NPC	NPC	NPC	NPC	NPC	NPC
Inspections – Tree Mitigation	Inspections	Tree Protection Inspection (During Construction)	0	100	New Fee	New Fee	NPC	NPC	NPC	NPC	NPC	NPC	NPC

Inspections – Tree Mitigation	Inspections	Tree Protection Inspection (Pre-Construction)	0	100	New Fee	New Fee	NPC	NPC	NPC	NPC	NPC	NPC	NPC
Marina	Add-On	Fueling Facility (Per Facility)	100	100	No Change	0	NPC	NPC	NPC	NPC	NPC	NPC	NPC
Marina	Add-On	Restaurant (Per Facility)	100	100	No Change	0	NPC	NPC	NPC	NPC	NPC	NPC	NPC
Marina	Add-On	Bar (Per Facility)	100	100	No Change	0	NPC	NPC	NPC	NPC	NPC	NPC	NPC
Marina	Add-On	Ship Store (Per Facility)	100	100	No Change	0	NPC	NPC	NPC	NPC	NPC	NPC	NPC
Marina	Facilities	Marina Facility ≤ 10,000 Sf	250	250	No Change	0	NPC	NPC	NPC	NPC	NPC	NPC	NPC
Marina	Facilities	Marina Facility > 10,000 Sf	500	500	No Change	0	NPC	NPC	NPC	NPC	NPC	NPC	NPC
Miscellaneous	General	Fingerprinting (Per Person)	15	15	No Change	0	NPC	NPC	NPC	NPC	NPC	NPC	NPC
Miscellaneous	General	Background Check	10	10	No Change	0	NPC	NPC	NPC	NPC	NPC	NPC	NPC
Miscellaneous	General	Repairs / Replacements Due To Damage	Actual Cost + 15%	Actual Cost + 15%	No Change	0	NPC	NPC	NPC	NPC	NPC	NPC	NPC
Parkland Dedication	Maintenance	Hoa Annual Open Space Maintenance Review	0	325	New Fee	New Fee	0	750	375	4	326.48	-1.48	-50
Parkland Dedication	Maintenance	Park Amenities Maintenance Fee (Admin)	0	325	New Fee	New Fee	0	500	250	4	326.48	-1.48	75
Parkland Dedication	Maintenance	Park Irrigation Infrastructure Maintenance Review	0	325	New Fee	New Fee	0	500	250	4	326.48	-1.48	75
Parkland Dedication	Maintenance	Parkland Maintenance Fee – Land (Admin)	0	325	New Fee	New Fee	0	500	250	4	326.48	-1.48	75
Parkland Dedication	Maintenance	Parkland Maintenance Fee – Trails / Greenbelts (Admin)	0	325	New Fee	New Fee	0	500	250	4	326.48	-1.48	75
Parkland Dedication	Park Reviews	Amenity Plan Review	0	325	New Fee	New Fee	0	500	250	4	326.48	-1.48	75
Parkland Dedication	Park Reviews	Greenbelt Dedication Review	0	325	New Fee	New Fee	0	500	250	4	326.48	-1.48	75
Parkland Dedication	Park Reviews	Open Space Compliance Review	0	325	New Fee	New Fee	0	500	250	4	326.48	-1.48	75
Parkland Dedication	Park Reviews	Park Easement Review	0	325	New Fee	New Fee	0	500	250	4	326.48	-1.48	75
Parkland Dedication	Park Reviews	Park Improvements Credit Review	0	325	New Fee	New Fee	0	500	250	4	326.48	-1.48	75
Parkland Dedication	Park Reviews	Parkland Concept Review	0	325	New Fee	New Fee	0	500	250	4	326.48	-1.48	75
Parkland Dedication	Park Reviews	Parkland Credit Agreement Review	0	325	New Fee	New Fee	0	500	250	4	326.48	-1.48	75
Parkland Dedication	Park Reviews	Parkland Deed Review	0	325	New Fee	New Fee	3486	500	1993	4	326.48	-1.48	-1668
Parkland Dedication	Park Reviews	Parkland Final Review	0	325	New Fee	New Fee	0	500	250	4	326.48	-1.48	75
Parkland Dedication	Park Reviews	Private Park Plan Review	0	325	New Fee	New Fee	0	500	250	4	326.48	-1.48	75
Parkland Dedication	Park Reviews	Restrictive Covenant Review (Open Space)	0	325	New Fee	New Fee	0	500	250	4	326.48	-1.48	75
Parkland Dedication	Park Reviews	Trail Alignment Review	0	325	New Fee	New Fee	0	500	250	4	326.48	-1.48	75
Parkland Dedication	Parkland	Park Development Fee (Admin)	0	325	New Fee	New Fee	0	500	250	4	326.48	-1.48	75
Parkland Dedication	Parkland	Parkland Dedication – Land (Processing)	0	325	New Fee	New Fee	2630	500	1565	4	326.48	-1.48	-1240
Parkland Dedication	Parkland	Parkland Fee-In-Lieu	0	1050	No Change	No Change	NPC	NPC	NPC	NPC	NPC	NPC	NPC
Peddlers	Event	Special Event Permit	25	25	No Change	0	NPC	NPC	NPC	NPC	NPC	NPC	NPC
Peddlers	Permit	Per Day	5	5	No Change	0	NPC	NPC	NPC	NPC	NPC	NPC	NPC
Peddlers	Permit	Per Week	10	10	No Change	0	NPC	NPC	NPC	NPC	NPC	NPC	NPC
Peddlers	Permit	Per Month	25	25	No Change	0	NPC	NPC	NPC	NPC	NPC	NPC	NPC
Peddlers	Permit	Per 3 Months	50	50	No Change	0	NPC	NPC	NPC	NPC	NPC	NPC	NPC
Peddlers	Permit	Per 6 Months	75	75	No Change	0	NPC	NPC	NPC	NPC	NPC	NPC	NPC
Peddlers	Permit	Per 12 Months	100	100	No Change	0	NPC	NPC	NPC	NPC	NPC	NPC	NPC
PIA	It Labor	Digital Records Retrieval (It Staff)	$35.50 Per Hour	$35.50 Per Hour	No Change	0	NPC	NPC	NPC	NPC	NPC	NPC	NPC
PIA	Labor	Pia Labor – Records Compilation / Redaction	$18.75 Per Hour	$18.75 Per Hour	No Change	0	NPC	NPC	NPC	NPC	NPC	NPC	NPC
Pool	Non-Resident	Senior Daily	3.5	3.5	No Change	0	NPC	NPC	NPC	NPC	NPC	NPC	NPC
Pool	Non-Resident	Adult Daily	4.5	4.5	No Change	0	NPC	NPC	NPC	NPC	NPC	NPC	NPC
Pool	Pass	Resident Single Season	60	60	No Change	0	NPC	NPC	NPC	NPC	NPC	NPC	NPC
Pool	Pass	Resident Family Season	100	100	No Change	0	NPC	NPC	NPC	NPC	NPC	NPC	NPC
Pool	Rental	Pavilion (Resident)	20	20	No Change	0	NPC	NPC	NPC	NPC	NPC	NPC	NPC
Pool	Rental	Pavilion (Non-Resident)	40	40	No Change	0	NPC	NPC	NPC	NPC	NPC	NPC	NPC
Pool	Resident	Senior Daily	2	2	No Change	0	NPC	NPC	NPC	NPC	NPC	NPC	NPC

Pool	Resident	Adult Daily	3	3	No Change	0	NPC	NPC	NPC	NPC	NPC	NPC	NPC
Pool	Resident	Child Daily	2	2	No Change	0	NPC	NPC	NPC	NPC	NPC	NPC	NPC
Row / Street Cut	Bore/Trench	Bore / Trench Plan Review	0	250	New Fee	New Fee	0	2500	1250	3	244.86	5.14	-1000
Row / Street Cut	Row	Row Permit	75	350	275	0.7857	0	1250	625	4.25	346.885	3.115	-275
Row / Street Cut	Row	Street Cut <50'	$0.50/Sf	250	Varies	Varies	0	2500	1250	3	244.86	5.14	-1000
Row / Street Cut	Row	Street Cut ≥50'	$50 + $0.50/Sf	500	Varies	Varies	0	5000	2500	6	489.72	10.28	-2000
Row / Street Cut	Row	Traffic Control Plan (Tcp) Review	0	100	New Fee	New Fee	0	500	250	1.25	102.025	-2.025	-150
Row / Street Cut	Row	Work In Row Without Permit	0	1000	New Fee	New Fee	0	10000	5000	12.25	999.845	0.155	-4000
Signs	Appeal	Variance Or Appeal	100	100	No Change	0	NPC	NPC	NPC	NPC	NPC	NPC	NPC
Signs	Awning	Awning / Canopy / Marquee Lettering	25	25	No Change	0	NPC	NPC	NPC	NPC	NPC	NPC	NPC
Signs	Change	Change Of Business Name	25	25	No Change	0	NPC	NPC	NPC	NPC	NPC	NPC	NPC
Signs	Development	Site Development Sign	50	50	No Change	0	NPC	NPC	NPC	NPC	NPC	NPC	NPC
Signs	Digital	Digital Sign	15	15	No Change	0	NPC	NPC	NPC	NPC	NPC	NPC	NPC
Signs	Freestanding	Single Business	50	50	No Change	0	NPC	NPC	NPC	NPC	NPC	NPC	NPC
Signs	Freestanding	Multitenant	50	50	No Change	0	NPC	NPC	NPC	NPC	NPC	NPC	NPC
Signs	Government	Government / Utility / Institutional Sign	50	50	No Change	0	NPC	NPC	NPC	NPC	NPC	NPC	NPC
Signs	Menu	Menu Board	50	50	No Change	0	NPC	NPC	NPC	NPC	NPC	NPC	NPC
Signs	Political	Political Sign	0	0	No Change	0	NPC	NPC	NPC	NPC	NPC	NPC	NPC
Signs	Portable	Sandwich Board	25	25	No Change	0	NPC	NPC	NPC	NPC	NPC	NPC	NPC
Signs	Real Estate	Real Estate Sign	0	0	No Change	0	NPC	NPC	NPC	NPC	NPC	NPC	NPC
Signs	Subdivision	Residential Subdivision Sign	50	50	No Change	0	NPC	NPC	NPC	NPC	NPC	NPC	NPC
Signs	Temporary	Temporary Banner (≤30 Days/Year)	25	25	No Change	0	NPC	NPC	NPC	NPC	NPC	NPC	NPC
Signs	Wall	Id Or Logo	50	50	No Change	0	NPC	NPC	NPC	NPC	NPC	NPC	NPC
Signs	Wall	Projecting Wall Sign	50	50	No Change	0	NPC	NPC	NPC	NPC	NPC	NPC	NPC
Signs	Wall	Hanging Wall Sign	50	50	No Change	0	NPC	NPC	NPC	NPC	NPC	NPC	NPC
Signs	Window	Window Sign	25	25	No Change	0	NPC	NPC	NPC	NPC	NPC	NPC	NPC
Site Development / Engineering	Drainage	Drainage Plan Review	0	1250	New Fee	New Fee	250	7500	3875	15.25	1244.705	5.295	-2625
Site Development / Engineering	Drainage	Drainage Study Revision	0	1900	New Fee	New Fee	150	75	112.5	23.25	1897.665	2.335	1787.5
Site Development / Engineering	Drainage	FEMA Floodplain Review	0	750	New Fee	New Fee	0	75	37.5	9.25	754.985	-4.985	712.5
Site Development / Engineering	Drainage	LOMR / LOMA Coordination	0	3250	New Fee	New Fee	0	7500	3750	40	3264.8	-14.8	-500
Site Development / Engineering	Easements / Encroachments	Easement Dedication Review (Outside Plat)	0	550	New Fee	New Fee	0	75	37.5	6.75	550.935	-0.935	512.5
Site Development / Engineering	Easements / Encroachments	Encroachment Request Review	0	550	New Fee	New Fee	115% Of Cost	75	75	6.75	550.935	-0.935	475
Site Development / Engineering	Easements / Encroachments	Maintenance Bond Review	0	550	New Fee	New Fee	0	75	37.5	6.75	550.935	-0.935	512.5
Site Development / Engineering	Easements / Encroachments	Performance Guarantee Processing	0	800	New Fee	New Fee	0	75	37.5	9.75	795.795	4.205	762.5
Site Development / Engineering	Engineering	Impervious <20k Sf	1000	5000	4000	0.8	0	10000	5000	61.25	4999.225	0.775	0
Site Development / Engineering	Engineering	Impervious ≥20k Sf	$1,000 + Cost	7500	Varies	Varies	0	15000	7500	92	7509.04	-9.04	0

Site Development / Engineering	Engineering	SDP ≤1 Acre	$1,000 + 115%	5000	Varies	Varies	0	10000	5000	61.25	4999.225	0.775	0
Site Development / Engineering	Engineering	SDP ≥15 Acres	$6,000 + 115%	7500	Varies	Varies	$45 Ea	25000	25000	92	7509.04	-9.04	-17500
Site Development / Engineering	Engineering	SDP Extension Request	0	550	New Fee	New Fee	0	75	37.5	6.75	550.935	-0.935	512.5
Site Development / Engineering	Engineering	SDP Revision (Minor)	0	1900	New Fee	New Fee	0	75	37.5	23.25	1897.665	2.335	1862.5
Site Development / Engineering	Engineering	TIA Review	$1,000 + Cost	2500	Varies	Varies	0	5750	2875	30.5	2489.41	10.59	-375
Site Development / Engineering	Environmental	Stormwater Review	0	3850	New Fee	New Fee	0	12500	6250	47.25	3856.545	-6.545	-2400
Site Development / Engineering	Environmental	Stormwater Maintenance Agreement Review	0	1900	New Fee	New Fee	0	75	37.5	23.25	1897.665	2.335	1862.5
Site Development / Engineering	Environmental	Tree Protection Evaluation	0	550	New Fee	New Fee	0	75	37.5	6.75	550.935	-0.935	512.5
Site Development / Engineering	Environmental	Tree Removal Permit (Engineering Review)	0	550	New Fee	New Fee	0	75	37.5	6.75	550.935	-0.935	512.5
Site Development / Engineering	Utilities	Lift Station Review	0	5750	New Fee	New Fee	0	75	37.5	70.5	5754.21	-4.21	5712.5
Solicitors	License	Company Filing Fee	25	25	No Change	0	NPC	NPC	NPC	NPC	NPC	NPC	NPC
Solicitors	License	Additional Solicitor (Per Person)	10	10	No Change	0	NPC	NPC	NPC	NPC	NPC	NPC	NPC
STR	Inspection	Str Inspection	0	50	New Fee	New Fee	90	75	82.5	0.5	40.81	9.19	-32.5
STR	Late	Str Late Fee	0	50	New Fee	New Fee	0	75	37.5	0.5	40.81	9.19	12.5
STR	Permit	Str Permit – Initial	50	50	No Change	0	NPC	NPC	NPC	NPC	NPC	NPC	NPC
STR	Reinstatement	Str Reinstatement	0	50	New Fee	New Fee	0	75	37.5	0.5	40.81	9.19	12.5
STR	Renewal	Str Renewal	50	50	No Change	0	NPC	NPC	NPC	NPC	NPC	NPC	NPC
STR	Transfer	Str Owner Change / Transfer	0	50	New Fee	New Fee	0	75	37.5	0.5	40.81	9.19	12.5
STR	Violation	Str Occupancy Violation Penalty	0	50	New Fee	New Fee	100	75	87.5	0.5	40.81	9.19	-37.5
STR	Inspection	Str Inspection	0	50	New Fee	New Fee	90	75	82.5	0.5	40.81	9.19	-32.5
Subdivision / Platting	Construction Plans	Construction Plan Re-Review	0	1850	New Fee	New Fee	0	75	37.5	22.75	1856.855	-6.855	1812.5
Subdivision / Platting	Construction Plans	Construction Plan Revision	0	1250	New Fee	New Fee	0	75	37.5	15.25	1244.705	5.295	1212.5
Subdivision / Platting	Construction Plans	Pre-Construction Meeting	0	500	New Fee	New Fee	0	75	37.5	6	489.72	10.28	462.5
Subdivision / Platting	Construction Plans	Subdivision Construction Plan Review	$2,000 + 115%	7500	Varies	Varies	75	25000	12537.5	92	7509.04	-9.04	-5037.5
Subdivision / Platting	Construction Plans	Warranty Inspection	0	550	New Fee	New Fee	$35.50 Per Hour	75	75	6.75	550.935	-0.935	475
Subdivision / Platting	Platting	Amending Plat	250	1200	950	0.7917	500	1500	1000	14.75	1203.895	-3.895	200
Subdivision / Platting	Platting	Appeal Request	$250 + Cost	1900	Varies	Varies	15	2500	1257.5	23.25	1897.665	2.335	642.5
Subdivision / Platting	Platting	Completeness Check (Statutory)	0	550	New Fee	New Fee	0	2500	1250	6.75	550.935	-0.935	-700
Subdivision / Platting	Platting	Concept / Master Plan	$250 + $50/Ac	5000	Varies	Varies	0	15000	7500	61.25	4999.225	0.775	-2500
Subdivision / Platting	Platting	Easement Dedication Plat	0	1150	New Fee	New Fee	0	75	37.5	14	1142.68	7.32	1112.5
Subdivision / Platting	Platting	Easement Release	125	250	125	0.5	0	750	375	3	244.86	5.14	-125
Subdivision / Platting	Platting	Final Plat	$350 + $50/Lot	5750	Varies	Varies	0	15000	7500	70.5	5754.21	-4.21	-1750
Subdivision / Platting	Platting	Final Plat Extension	0	550	New Fee	New Fee	0	75	37.5	6.75	550.935	-0.935	512.5
Subdivision / Platting	Platting	Final Plat Reinstatement	0	550	New Fee	New Fee	0	75	37.5	6.75	550.935	-0.935	512.5
Subdivision / Platting	Platting	Final Plat Revision	0	1900	New Fee	New Fee	0	75	37.5	23.25	1897.665	2.335	1862.5
Subdivision / Platting	Platting	Lot Consolidation	0	1150	New Fee	New Fee	0	75	37.5	14	1142.68	7.32	1112.5
Subdivision / Platting	Platting	Master Plan Amendment	0	2750	New Fee	New Fee	0	75	37.5	33.75	2754.675	-4.675	2712.5
Subdivision / Platting	Platting	Master Plan Verification	0	1150	New Fee	New Fee	0	75	37.5	14	1142.68	7.32	1112.5
Subdivision / Platting	Platting	Minor / Replat	$200 + $50/Lot	750	Varies	Varies	0	2500	1250	9.25	754.985	-4.985	-500

Subdivision / Platting	Platting	Plat Vacation	300	2300	2000	0.8696	0	3000	1500	28.25	2305.765	-5.765	800
Subdivision / Platting	Platting	Preliminary Plat	$350 + $50/Lot	5750	Varies	Varies	0	15000	7500	70.5	5754.21	-4.21	-1750
Subdivision / Platting	Platting	Preliminary Plat Extension	0	550	New Fee	New Fee	25	75	50	6.75	550.935	-0.935	500
Subdivision / Platting	Platting	Preliminary Plat Reinstatement	0	550	New Fee	New Fee	5	75	40	6.75	550.935	-0.935	510
Subdivision / Platting	Platting	Preliminary Plat Revision	0	1900	New Fee	New Fee	10	75	42.5	23.25	1897.665	2.335	1857.5
Subdivision / Platting	Platting	Street Dedication Plat	0	1150	New Fee	New Fee	50	75	62.5	14	1142.68	7.32	1087.5
Subdivision / Platting	Platting	Technical Review Fee (Internal)	0	600	New Fee	New Fee	100	75	87.5	7.5	612.15	-12.15	512.5
Taps	Admin	Existing Line Tap Fee	750	750	No Change	0	NPC	NPC	NPC	NPC	NPC	NPC	NPC
* Indicates minimum cost; actual charges may be recalculated by the City before utility account set-up. ** Long service is defined as a service line that crosses the road (whole or in part) from the main to provide a connection. Short service is defined as a service line that does not have to cross the road from the main to provide a connection.	Admin	Lane Crossing (Per Lane)	750	750	No Change	0	NPC	NPC	NPC	NPC	NPC	NPC	NPC
***Cost assumes two lanes of traffic (22' pavement).	Admin	Construction Administration (Per Tap)	750	750	No Change	0	NPC	NPC	NPC	NPC	NPC	NPC	NPC
Taps	Bore	Bore Service Tap	$6,250.00***	$6,250.00***	No Change	0	NPC	NPC	NPC	NPC	NPC	NPC	NPC
Taps	Permit	Utility Extension Permit	140	140	No Change	0	NPC	NPC	NPC	NPC	NPC	NPC	NPC
Taps	Reclaimed	Reclaimed Water Tap	$3,000.00*	$3,000.00*	No Change	0	NPC	NPC	NPC	NPC	NPC	NPC	NPC
Taps	Sewer	Pressure Sewer Short Service	$3,000.00*	$3,000.00*	No Change	0	NPC	NPC	NPC	NPC	NPC	NPC	NPC
Taps	Sewer	Pressure Sewer Long Service**	$4,500.00*	$4,500.00*	No Change	0	NPC	NPC	NPC	NPC	NPC	NPC	NPC
Taps	Sewer	Gravity Sewer Short Service	$3,400.00*	$3,400.00*	No Change	0	NPC	NPC	NPC	NPC	NPC	NPC	NPC
Taps	Sewer	Gravity Sewer Long Service**	$5,200.00*	$5,200.00*	No Change	0	NPC	NPC	NPC	NPC	NPC	NPC	NPC
Taps	Water	Water Short Service (¾")	$3,000.00*	$3,000.00*	No Change	0	NPC	NPC	NPC	NPC	NPC	NPC	NPC
Taps	Water	Water Long Service (¾")	$4,500.00*	$4,500.00*	No Change	0	NPC	NPC	NPC	NPC	NPC	NPC	NPC
Towing	Class A	Tow ≤10,000 Lbs	95	95	No Change	0	NPC	NPC	NPC	NPC	NPC	NPC	NPC
Towing	Class A	Flatbed	35	35	No Change	0	NPC	NPC	NPC	NPC	NPC	NPC	NPC
Towing	Class B	Tow >10,000 Lbs	393	393	No Change	0	NPC	NPC	NPC	NPC	NPC	NPC	NPC
Towing	Class B	Large Slide Truck	200	200	No Change	0	NPC	NPC	NPC	NPC	NPC	NPC	NPC
Towing	Class B	Additional Slide Truck	200	200	No Change	0	NPC	NPC	NPC	NPC	NPC	NPC	NPC
Towing	Class B	Additional Tow Truck	100	100	No Change	0	NPC	NPC	NPC	NPC	NPC	NPC	NPC
Towing	Equipment	Dollies	35	35	No Change	0	NPC	NPC	NPC	NPC	NPC	NPC	NPC
Towing	Equipment	Air Bags	$75.00/Hr	$75.00/Hr	No Change	0	NPC	NPC	NPC	NPC	NPC	NPC	NPC
Towing	Equipment	Forklift	$75.00/Hr	$75.00/Hr	No Change	0	NPC	NPC	NPC	NPC	NPC	NPC	NPC
Towing	Equipment	Haul Trailer	$75.00/Hr	$75.00/Hr	No Change	0	NPC	NPC	NPC	NPC	NPC	NPC	NPC
Towing	Equipment	Trailer Dollies	$75.00/Hr	$75.00/Hr	No Change	0	NPC	NPC	NPC	NPC	NPC	NPC	NPC
Towing	Equipment	Specialized Equipment	$75.00/Hr	$75.00/Hr	No Change	0	NPC	NPC	NPC	NPC	NPC	NPC	NPC

Towing	Labor	Waiting Time (After 1st Hour)	$15.00/Hr	$15.00/Hr	No Change	0	NPC	NPC	NPC	NPC	NPC	NPC	NPC
Towing	Labor	Winching	35	35	No Change	0	NPC	NPC	NPC	NPC	NPC	NPC	NPC
Towing	Labor	Vehicle Preparation	25	25	No Change	0	NPC	NPC	NPC	NPC	NPC	NPC	NPC
Towing	Labor	Waiting Time	$20.00/Hr	$20.00/Hr	No Change	0	NPC	NPC	NPC	NPC	NPC	NPC	NPC
Towing	Labor	Additional Manpower	$15.00/Hr/ Person	$15.00/Hr/ Person	No Change	0	NPC	NPC	NPC	NPC	NPC	NPC	NPC
Towing	Recovery	Winching	35	35	No Change	0	NPC	NPC	NPC	NPC	NPC	NPC	NPC
Towing	Storage	Daily Storage	15	15	No Change	0	NPC	NPC	NPC	NPC	NPC	NPC	NPC
Trade Permits	Backflow	Backflow Annual Test	0	100	New Fee	New Fee	$18.75 Per Hour	75	75	1.25	102.025	-2.025	25
Trade Permits	Backflow	Backflow Installation	0	200	New Fee	New Fee	3.5	75	39.25	2.5	204.05	-4.05	160.75
Trade Permits	Commercial	Commercial	$125 + $0.05/Sf	450	Varies	Varies	0	1250	625	5.5	448.91	1.09	-175
Trade Permits	Electrical	Electrical Service Upgrade	0	200	New Fee	New Fee	100	75	87.5	2.5	204.05	-4.05	112.5
Trade Permits	Gas	Gas Line Install	0	200	New Fee	New Fee	20	75	47.5	2.5	204.05	-4.05	152.5
Trade Permits	Gas	Gas Test	0	100	New Fee	New Fee	40	75	57.5	1.25	102.025	-2.025	42.5
Trade Permits	Generators	Generator Electrical Connection	0	200	New Fee	New Fee	2	75	38.5	2.5	204.05	-4.05	161.5
Trade Permits	Irrigation	Irrigation System	0	200	New Fee	New Fee	2	75	38.5	2.5	204.05	-4.05	161.5
Trade Permits	Kitchen Systems	Hood System Install	0	400	New Fee	New Fee	3	75	39	5	408.1	-8.1	361
Trade Permits	Residential	Residential	100	150	50	0.3333	0	500	250	1.75	142.835	7.165	-100
Tree Mitigation	Administrative Review	Tree Canopy Calculation Review	0	250	New Fee	New Fee	0	75	37.5	3	244.86	5.14	212.5
Tree Mitigation	Administrative Review	Tree Mitigation Assessment Review	0	250	New Fee	New Fee	25	75	50	3	244.86	5.14	200
Tree Mitigation	Administrative Review	Tree Mitigation Plan Review (Full)	0	800	New Fee	New Fee	0	75	37.5	9.75	795.795	4.205	762.5
Tree Mitigation	Administrative Review	Tree Preservation Plan Review	0	400	New Fee	New Fee	50	75	62.5	5	408.1	-8.1	337.5
Tree Mitigation	Administrative Review	Tree Replacement Plan Review	0	600	New Fee	New Fee	25	75	50	7.5	612.15	-12.15	550
Tree Mitigation	Removal Permit	Class 1	0	100	New Fee	New Fee	50	125	87.5	1.25	102.025	-2.025	12.5
Tree Mitigation	Removal Permit	Class 2	0	250	New Fee	New Fee	50	250	150	3	244.86	5.14	100
Tree Mitigation	Removal Permit	Class 3	0	350	New Fee	New Fee	50	325	187.5	4.25	346.885	3.115	162.5
Tree Mitigation	Removal Permit	Class 4	0	550	New Fee	New Fee	50	500	275	6.75	550.935	-0.935	275
Vendors	Itinerant	Company Filing Fee	100	100	No Change	0	NPC	NPC	NPC	NPC	NPC	NPC	NPC
Vendors	Itinerant	Additional Employee (Per Person)	10	10	No Change	0	NPC	NPC	NPC	NPC	NPC	NPC	NPC
Wrecker	Permit	Wrecker Service Permit	100	100	No Change	0	NPC	NPC	NPC	NPC	NPC	NPC	NPC
Zoning & Land Use	Land Use	Administrative Appeal	$250 + Cost	350	Varies	Varies	50	1000	525	4.25	346.885	3.115	-175
Zoning & Land Use	Land Use	Conditional Use	250	750	500	0.6667	50	1500	775	9.25	754.985	-4.985	-25
Zoning & Land Use	Land Use	FLUM Amendment >1 Ac	$250 + $50/Ac	750	Varies	Varies	0	2500	1250	9.25	754.985	-4.985	-500
Zoning & Land Use	Land Use	FLUM Amendment ≤1 Ac	250	500	250	0.5	0	2500	1250	6	489.72	10.28	-750
Zoning & Land Use	Land Use	Home-Based Business	50	200	150	0.75	0	750	375	2.5	204.05	-4.05	-175
Zoning & Land Use	Land Use	Nonconforming Use Determination	0	400	New Fee	New Fee	0	750	750	5	408.1	-8.1	-350
Zoning & Land Use	Land Use	PDD Amendment	0	4250	New Fee	New Fee	0	10000	5000	52	4244.24	5.76	-750
Zoning & Land Use	Land Use	PDD Combined	$500 + $50/Ac	5250	Varies	Varies	250	10000	5125	64.25	5244.085	5.915	125
Zoning & Land Use	Land Use	PDD Concept	$250 + $50/Ac	2500	Varies	Varies	250	10000	5125	30.5	2489.41	10.59	-2625
Zoning & Land Use	Land Use	PDD Detail	$500 + $50/Ac	5250	Varies	Varies	250	10000	5125	64.25	5244.085	5.915	125
Zoning & Land Use	Land Use	Rezoning >1 Acre	$250 + $50/Ac	4000	Varies	Varies	250	7500	3875	49	3999.38	0.62	125
Zoning & Land Use	Land Use	Rezoning ≤1 Acre	250	2500	2250	0.9	750	7500	4125	30.5	2489.41	10.59	-1625
Zoning & Land Use	Land Use	Temporary Use Permit	0	400	New Fee	New Fee	$1,000 + 115%	750	750	5	408.1	-8.1	-350
Zoning & Land Use	Land Use	Vested Rights Verification Letter	0	400	New Fee	New Fee	0	750	750	5	408.1	-8.1	-350
Zoning & Land Use	Land Use	Zoning Interpretation	0	400	New Fee	New Fee	0	750	750	5	408.1	-8.1	-350
Zoning & Land Use	Land Use	Zoning Variance	250	1200	950	0.7917	0	1500	7500	14.75	1203.895	-3.895	-6300

ORDINANCE NO. 26-05-21-01

AN ORDINANCE OF THE CITY COUNCIL OF THE CITY OF LAGO VISTA, TEXAS, AMENDING THE CODE OF ORDINANCES TO REMOVE CODIFIED NUMERICAL FEES; ADOPTING FEES BY REFERENCE THROUGH A SEPARATELY ADOPTED FEE SCHEDULE; REPEALING APPENDIX A (FEE SCHEDULE) OF THE CODE OF ORDINANCES; PROVIDING FOR REPEALER; PROVIDING FOR CODIFICATION; PROVIDING FOR PUBLICATION; PROVIDING FOR SEVERABILITY; PROVIDING FOR SAVINGS; AND PROVIDING FOR AN EFFECTIVE DATE.

Whereas, the City of Lago Vista is a home-rule municipality organized and operating under the laws of the State of Texas; and

Whereas, pursuant to Texas Local Government Code Chapters 211 and 212, a municipality is authorized to regulate land use and development, including zoning, subdivision plats, site plans, and related development approvals, and to impose and collect reasonable fees associated with the administration and enforcement of such regulations; and

WHEREAS, pursuant to Texas Local Government Code Chapter 395, a municipality is authorized to impose, collect, and amend impact fees and other development-related charges in accordance with an adopted capital improvements plan and impact fee ordinance; and

WHEREAS, pursuant to Texas Local Government Code Chapter 245, a municipality may establish and amend fees applicable to development applications, subject to applicable vesting requirements and state law; and

WHEREAS, the Texas Local Government Code generally authorizes municipalities to establish, revise, and collect fees for municipal services and regulatory activities through ordinances and resolutions adopted by the governing body; and

WHEREAS, the City Council finds that codifying numerical fee amounts within the Code of Ordinances creates administrative inefficiencies, reduces flexibility, and necessitates frequent code amendments to implement routine fee updates; and

WHEREAS, the City Council desires to improve transparency, consistency, and administrative efficiency by adopting a consolidated City-wide Fee Schedule

by resolution and incorporating such fees by reference throughout the Code of Ordinances; and

WHEREAS, the City Council further finds that repealing Appendix A (Fee Schedule) of the Code of Ordinances and replacing numerical fee references with a uniform reference to the adopted Fee Schedule will allow for regular review and adoption of fees in conjunction with the City's annual budget process while preserving full City Council oversight; and

WHEREAS, the City Council desires to provide for repeal of conflicting provisions, codification, publication, severability, savings, and a clear effective date for this ordinance;

NOW, THEREFORE, BE IT ORDAINED BY THE CITY COUNCIL OF THE CITY OF LAGO VISTA, TEXAS, THAT:

Section 1. Adoption Of Fees By Reference. All fees, charges, and rates imposed by the City of Lago Vista for municipal services, permits, licenses, inspections, plan reviews, enforcement actions, and development-related activities shall be as established in the City of Lago Vista Fee Schedule, as adopted and amended by resolution of the City Council. Except where expressly required by state law, no numerical fee amount shall be codified within the Code of Ordinances. All such fees shall be governed exclusively by the adopted Fee Schedule in effect at the time the fee is assessed. The proposed Fee Schedule is included as Exhibit A below.

Section 2. Amendment Of Code Of Ordinances – Removal Of Numerical Fees. The Code of Ordinances of the City of Lago Vista, Texas, is hereby amended to remove all numerical fee amounts and replace such references with language substantially as follows: "A fee shall be charged in accordance with the City of Lago Vista Fee Schedule, as adopted by the City Council and as amended from time to time." This amendment shall apply to all chapters, articles, and sections of the Code of Ordinances that reference fees, including but not limited to provisions related to development, permitting, inspection, licensing, enforcement, and administrative services.

Section 3. Repeal Of Appendix A – Fee Schedule. Appendix A (Fee Schedule) of the Code of Ordinances of the City of Lago Vista, Texas, is hereby repealed in its entirety. All references within the Code of Ordinances to Appendix A, codified fee schedules, or similar provisions are hereby deleted and replaced with references to the City of Lago Vista Fee Schedule adopted by resolution of the City Council.

Section 4. Repealer. All ordinances, resolutions, parts of ordinances, and Code provisions of the City of Lago Vista in conflict with this ordinance are hereby repealed to the extent of such conflict.

Section 5. Codification. This ordinance shall be codified in the Code of Ordinances of the City of Lago Vista, Texas. The City Secretary and the City's codification service are authorized and directed to renumber, reletter, and reorganize the provisions of this ordinance as necessary for proper codification.

Section 6. Publication. The City Secretary is hereby authorized and directed to cause this ordinance to be published as required by law.

Section 7. Severability. If any section, subsection, sentence, clause, or phrase of this ordinance is held to be invalid or unconstitutional by a court of competent jurisdiction, such decision shall not affect the validity of the remaining portions of this ordinance.

Section 8. Savings. This ordinance shall not affect any accrued rights, liabilities, obligations, or enforcement actions existing prior to the effective date of this ordinance, nor shall it be construed to impair vested rights established under applicable state law.

Section 9. Effective Date. This ordinance shall take effect on the 1st of the new month after its adoption.

PASSED AND APPROVED on the 21st day of May 2026.

CITY OF LAGO VISTA, TEXAS

_____

Shane Saum, Mayor

ATTEST:

_____

Robin Smith, City Secretary

Exhibit A

AGENDA ITEM NO. IX.2

Item Cover Page

CITY COUNCIL AGENDA ITEM REPORT

DATE: May 21, 2026

SUBMITTED BY: Councilor Benefield, City Council

SUBJECT: Consider, discuss, and take action regarding dormant or inactive Planned Development Districts, associated LUE or utility-capacity commitments, project vesting, and potential amendments to the City's PDD, project expiration, and dormancy procedures.

BACKGROUND: The City of Lago Vista has several Planned Development Districts that appear to have remained
inactive or dormant for extended periods of time. Some of these PDDs may contain development
entitlements, approved concept plans, approved detail plans, development agreements, utility
commitments, LUE reservations, or other approvals that could impact the City's long-term
planning, water and wastewater capacity, and future development policy.
This item is not intended to revoke or amend any specific PDD at this meeting. Rather, the
purpose is to begin a policy and review of inactive or potentially dormant PDDs so Council can
better understand what entitlements exist, what utility or LUE commitments may be tied to those
approvals, and whether the City should consider future amendments to its PDD, project
expiration, and dormancy procedures.
The issue appears to involve at least two separate questions.
First, Council should understand whether any dormant or inactive PDDs include zoning or
development entitlements that remain legally effective despite little or no progress toward actual
construction.
Second, Council should understand whether any PDD approval, development agreement,
ordinance, or related document separately grants or reserves LUEs or utility capacity, and
whether any such commitment can be modified, released, or addressed separately from the

underlying zoning classification.
Each PDD likely needs to be reviewed individually because the effect of each approval may
depend on the specific ordinance, agreement, concept plan, detail plan, vesting status, and any
related utility-capacity language. A PDD is generally a zoning classification and does not
typically obligate a city's water or wastewater capacity. The issue of LUEs being tied to a PDD
may therefore require separate review from the zoning status of the PDD itself.
Lago Vista's existing code appears to state that an approved detail plan does not automatically
expire. This may make it more difficult to establish dormancy under the City's current regulatory
structure and may warrant future review by Council.
Texas Local Government Code Chapter 245 may also be relevant because certain development
projects may be protected from retroactive regulatory changes once rights are vested. Chapter
245 includes provisions addressing dormant projects and allows regulatory agencies to adopt
expiration provisions under certain conditions, including limits on how soon individual permits
and projects may expire.

ATTACHMENTS:
A- PDD.pdf
2-A- PDD Map.pdf

Potentially Dormant or Partially Dormant Entitlements

Description	Latest Ordinance Date	Last Activity Date	Last Activity Description	Current Zoning	Ordinance Number	FLUM	Address or Location	Maximum Number of Dwellings
Lot 8 - The Island	4/27/1998	4/27/1998	Original LV Zoning Ordinance Designation	R-4 / R1S (15C)	98-04-27-03	POA Park	3904 Lake Park Cove[1]	n/a
Emerald Pointe subdivision	5/20/2010	7/6/2023	Vacate access and public utility easements	R-1S (18C)	10-05-20-02	City Park	Patriot Drive north of Azure Avenue	alleged plans pending[2]
Highland Lake Drive at Canary Way	10/21/2021	10/21/2021	Zoning Change (no legal access to property)	R-1S (18C)	21-10-21-02	Low-Density Residential	Highland Lake Drive[3]	no exist. subdivision
Common Area: Villlage III at Highland Lake	6/15/2000	6/15/2000	CR approval without required development plan	CR	00-06-15-02	Low-Density Residential	Waterside Drive at Santa Anna Cove	no exist. subdivision or approval
Former England Property	2/6/2020	2/6/2020	Zoning Change (no subsequent subdivision)	R-1S (18A)	20-02-06-02	Varies[4]	5315 Lohman Ford Road	no exist. subdivision
Former Highland Lakes Golf Course	4/27/1998	4/27/1998	Original LV Zoning Ordinance Designation	G-1	98-04-27-03	POA Park	20406 Earhart Lane	0
Former Executive Golf Course	4/27/1998	10/13/2022	Preliminary Plat Approval (19 residential lots)	G-1	98-04-27-03	POA Park	8116 Chestnut Cove	19 (vested prior to ordinance amendment)
Marshalls Vista / Shoreline Ranch	10/18/2007	8/3/2023	Failed FLUM Amendment Request	PDD	07-10-18-01	Varies[5]	Shoreline Ranch Drive east of LVHS	568 (single-family & multifamily)
Montechino (currently undergoing re-branding effort)	10/17/2019	8/10/2023	Preliminary Plat approved	PDD	15-11-19-01[6]	Varies[7]	SE Corner of Lohman Ford Road at Shoreline Ranch Drive	195 single-family lots + 2 commercial lots + retirement center[4]
The Falls	6/16/2022	6/16/2022	Zoning Change	PDD	22-06-16-02	Varies[8]	SE Corner of Lohman Ford Road at Sylvester Ford Road	729 + 200 townhomes + 55 acres of hotel / mixed use
Vista Villas	11/18/2004	8/28/2023	Application (Pool renewal)	PDD	04-11-18-01	Medium-Density Residential	2006 American Drive (Amenity Center)	62 (18 built) + amenity center (built)
Lohman Ford Heights / 6601 Panorama Ridge PDD[9]	9/6/2018	11/29/2023	Site Development Plan Review for expansion	C-2	18-09-06-03	Regional Retail/Office/Commercial	6706 Lohman Ford Road	n/a
Highland Lakes Clubhouse Expansion PDD	9/19/2013	8/13/2021	Failed Fire Inspection (Grill at Highland Lake)	PDD	13-09-19-01	Regional Retail/Office/Commercial	20552 Highland Lake Drive	add hotel, pavilion, and new cart barn
Marshalls Harbor (Resort Hotel/Commercial only)	6/8/2006	2/6/2020	Failed Zoning Change Request	PDD	06-06-08-02	Rural Residential	4800-5100 Shoreline Ranch Road	min. 100 guest rooms / amenities + 1,000 sf conference center
Marshalls Harbor (condominium only)	11/3/2005	2/6/2020	Failed Zoning Change Request	PDD	05-11-03-01	Rural Residential	5424 Mira Lago Drive (Lot 49A before resubdivision)	56 (condominium units)
Marshalls Harbor (marina only)	1/18/2001	2/6/2020	Failed Zoning Change Request	PDD	01-01-18-01	Rural Residential	5424 Mira Lago Drive (Lot 49B before resubdivision)	"private" marina
Peninsula	8/21/2008	9/1/2022	Withdrawn Application	PDD	08-08-21-02	Low-Density Residential	1900 American Drive	225 (condominium units) + marina / amenities
Turnback Ranch	9/21/2023	current	PDD Amendment	PDD	23-09-21-01	Varies[10]	7602 Bar-K Ranch Road (Dodge Trail Extension)	349
Tusikanni / Firefly Cove	9/2/2021	current	Subdivision Construction Plans	PDD	21-09-02-01	Varies[11]	19304 Treat Trail	325 (includes 45 estate lots) + amenities
Lakeshore Boulevard PDD	4/16/2020	4/16/2020	Zoning Change (waterfront access issues)	PDD	20-04-16-02	Rural Residential	5619 Lakeshore Boulevard	70 (condominium units)
The Majestic	6/19/2008	6/19/2008	C-1 to PDD (housing with commercial outparcel)	PDD	08-06-19-01	POA Park	Boggy Ford Road west of Poe Cove	78 + 1 commercial lot
Villas at Keegans Crossing	6/19/2006	6/19/2006	Original Approval	PDD	08-06-19-02	Regional Retail/Office/Commercial	Lohman Ford Road north of Rancho Cielo	154 +5 commerical Lots

[1]Lot 8 of the Island was omitted from the PDD and is being marketed along with this single-family residential lot as alledged access.
[2]Application to vacate existing subdivision was never completed, but the existing final plat was approved for 182 single-family lots.
[3]The unimproved dedication referred to as Canary Way on an existing plat does not meet the subdivision regulations or minimum industry standards for safety and additional property is required for legal access.
[4]Regional Retail/Office/Commercial; Neighborhood Retail/Office/Commercial; Low-Density Residential
[5]Rural Residentail; POA Park
[6]Ordinance 19-03-07-01 and 19-10-17-01 displaced 67 single-family lots and 2 commerical lots, but added 130 assisted living apartments, 100 independent living townhomes, and a new amenity center.
[7]Low-Density Residential; Regional Retail/Office/Commercial
[8]Low-Density Residential; Medium-Density Residential; Regional Retail/Office/Commercial
[9]Because of the multiple and inconsistent addresses, the PDD approved in Ordinance No. 96-06-20-01 was inadvertently included despite being displaced by Vistago Print (C-2) in Ordinance No. 18-09-06-03.
[10]High-Density Residential; Regional Retail/Office/Commercial; City Park
[11]High-Density Residential; Low-Density Residential; Mixed-Use; City Park

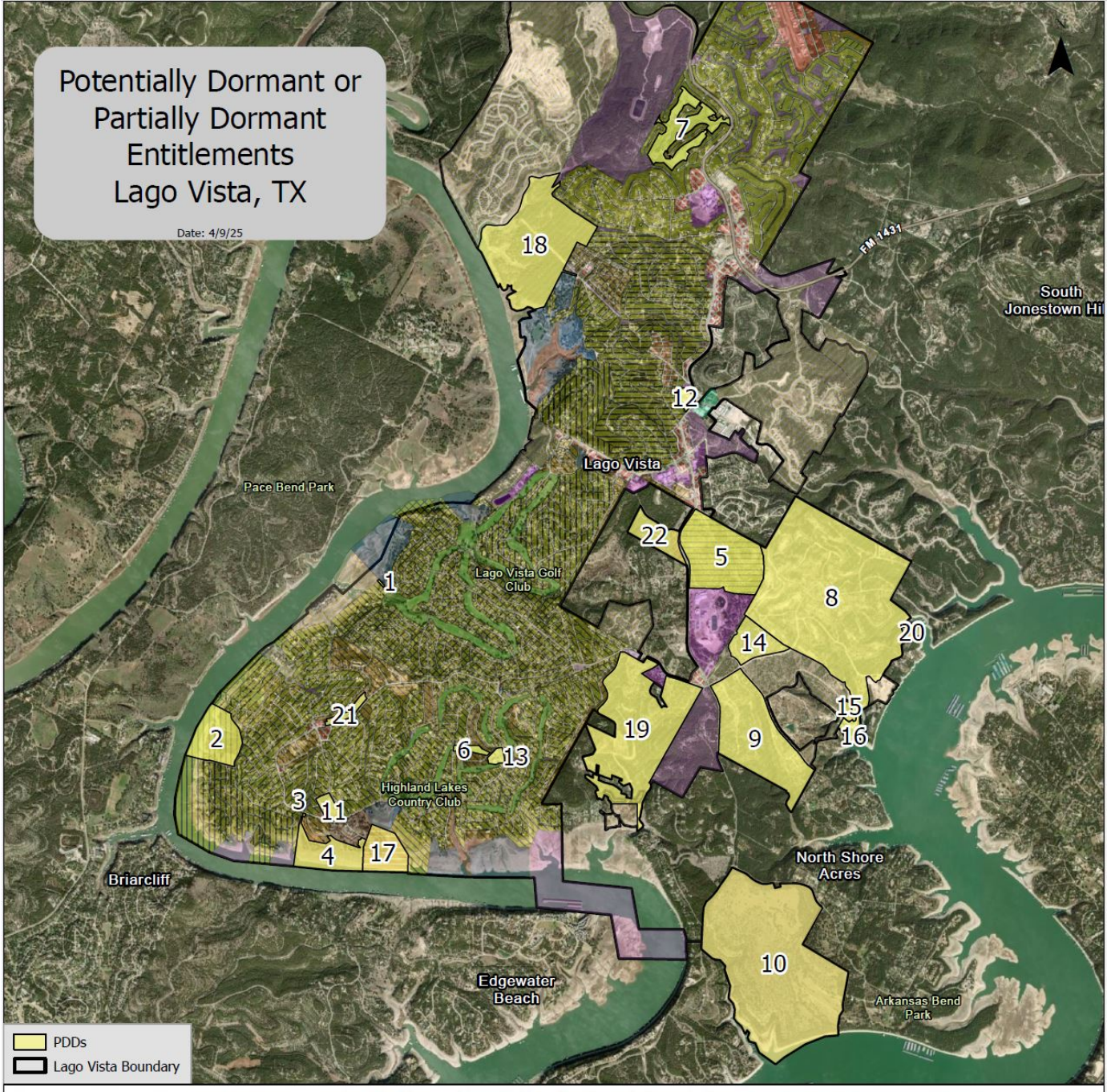

Potentially Dormant or Partially Dormant Entitlements

PDD #	Description	Latest Ordinance Date	Last Activity Date	Last Activity Description	Current Zoning	Ordinance Number	FLUM	Address or Location	Maximum Number of Dwellings
1	Lot 8 - The Island	4/27/1998	4/27/1998	Original LV Zoning Ordinance Designation	R-4 / R1S (15C)	98-04-27-03	POA Park	3904 Lake Park Cove [1]	n/a
2	Emerald Pointe subdivision	5/20/2010	7/6/2023	Vacate access and public utility easements	R-1S (18C)	10-05-20-02	City Park	Patriot Drive north of Azure Avenue	alleged plans pending[2]
3	Highland Lake Drive at Canary Way	10/21/2021	10/21/2021	Zoning Change (no legal access to property)	R-1S (18C)	21-10-21-02	Low-Density Residential	Highland Lake Drive[3]	no exist. subdivision
4	Common Area: Village III at Highland Lake	6/15/2000	6/15/2000	CR approval without required development plan	CR	00-06-15-02	Low-Density Residential	Waterside Drive at Santa Anna Cove	no exist. subdivision or approval
5	Former England Property	2/6/2020	2/6/2020	Zoning Change (no subsequent subdivision)	R-1S (18A)	20-02-06-02	Varies[4]	5315 Lohman Ford Road	no exist. subdivision
6	Former Highland Lakes Golf Course	4/27/1998	4/27/1998	Original LV Zoning Ordinance Designation	G-1	98-04-27-03	POA Park	20406 Earhart Lane	0
7	Former Executive Golf Course	4/27/1998	10/13/2022	Preliminary Plat Approval (19 residential lots)	G-1	98-04-27-03	POA Park	8116 Chestnut Cove	19 (vested prior to ordinance amendment)
8	Marshalls Vista / Shoreline Ranch	10/18/2007	8/3/2023	Failed FLUM Amendment Request	PDD	07-10-18-01	Varies[5]	Shoreline Ranch Drive east of LVHS	568 (single-family & multifamily)
9	Montecchio (currently undergoing re-branding effort)	10/17/2019	8/10/2023	Preliminary Plat approved	PDD	15-11-19-01[6]	Varies[7]	SE Corner of Lohman Ford Road at Shoreline Ranch Drive	195 single-family lots + 2 commercial lots + retirement center[4]
10	The Falls	6/16/2022	6/16/2022	Zoning Change	PDD	22-06-16-02	Varies[8]	SE Corner of Lohman Ford Road at Sylvester Ford Road	729 + 200 townhomes + 55 acres of hotel / mixed use
11	Vista Villas	11/18/2004	8/28/2023	Application (Pool renewal)	PDD	04-11-18-01	Medium-Density Residential	2006 American Drive (Amenity Center)	62 (18 built) + amenity center (built)
12	Lohman Ford Heights / 6601 Panorama Ridge PDD [9]	9/6/2018	11/29/2023	Site Development Plan Review for expansion	C-2	18-09-06-03	Regional Retail/Office/Commercial	6706 Lohman Ford Road	n/a
13	Highland Lakes Clubhouse Expansion PDD	9/19/2013	8/13/2021	Failed Fire Inspection (Grill at Highland Lake)	PDD	13-09-19-01	Regional Retail/Office/Commercial	20552 Highland Lake Drive	add hotel, pavilion, and new cart barn
14	Marshalls Harbor (Resort Hotel/Commercial only)	6/8/2006	2/6/2020	Failed Zoning Change Request	PDD	06-06-08-02	Rural Residential	4800-5100 Shoreline Ranch Road	min. 100 guest rooms / amenities + 1,000 sf conference center
15	Marshalls Harbor (condominium only)	11/3/2005	2/6/2020	Failed Zoning Change Request	PDD	05-11-03-01	Rural Residential	5424 Mira Lago Drive (Lot 49A before resubdivision)	56 (condominium units)
16	Marshalls Harbor (marina only)	1/18/2001	2/6/2020	Failed Zoning Change Request	PDD	01-01-18-01	Rural Residential	5424 Mira Lago Drive (Lot 49B before resubdivision)	"private" marina
17	Peninsula	8/21/2008	9/1/2022	Withdrawn Application	PDD	08-08-21-02	Low-Density Residential	1900 American Drive	225 (condominium units) + marina / amenities
18	Turnback Ranch	9/21/2023	current	PDD Amendment	PDD	23-09-21-01	Varies[10]	7602 Bar-K Ranch Road (Dodge Trail Extension)	349
19	Tusikanni / Firefly Cove	9/2/2021	current	Subdivision Construction Plans	PDD	21-09-02-01	Varies[11]	19304 Treat Trail	325 (includes 45 estate lots) + amenities
20	Lakeshore Boulevard PDD	4/16/2020	4/16/2020	Zoning Change (waterfront access issues)	PDD	20-04-16-02	Rural Residential	5619 Lakeshore Boulevard	70 (condominium units)
21	The Majestic	6/19/2008	6/19/2008	C-1 to PDD (housing with commercial outparcel)	PDD	08-06-19-01	POA Park	Boggy Ford Road west of Poe Cove	78 + 1 commercial lot
22	Villas at Keegans Crossing	6/19/2006	6/19/2006	Original Approval	PDD	08-06-19-02	Regional Retail/Office/Commercial	Lohman Ford Road north of Rancho Cielo	154 +5 commercial Lots

AGENDA ITEM NO. IX.3

Item Cover Page

CITY COUNCIL AGENDA ITEM REPORT

DATE: May 21, 2026

SUBMITTED BY: Eric DeLaCruz, Finance

SUBJECT: Consider, discuss, and take action regarding the award of RFP No. 26-05 for Tree Clearing, Mulching, and Right-of-Way Maintenance Services to South Texas Tree Service and possible additional contractors, and authorize the City Manager to negotiate and execute agreement(s).

BACKGROUND: An RFP was issued April 6th, 2026 with a closing date of April 30th 2026. A total of ten (10) proposals were received and read aloud. The proposers were South Texas Tree Service, Lyellco Inc.,The Foresight (Synthesist), WCA, Urban Foresters, S&M Pro Construction, Ethoscapes, UTZ Environmental, Unity Contractor Services, and Lynx Contractors. A comparison of all three proposals can be found in the Bid Summary page attached.

The City solicited proposals for on-call services to support routine maintenance, drainage improvements, and roadway accessibility. Proposals were requested to include unit pricing for ROW clearing, drainage ditch clearing, land clearing, mulching, and emergency work.

FINDINGS: Because proposals were submitted in varying formats, staff evaluated all bids using a consistent comparison approach based on typical City work:

- 1,000 LF – ROW Clearing
- 500 LF – Drainage Ditch Clearing
- 1 Acre – Land Clearing
- 1 Acre – Large Area Mulching

Each proposer's pricing was applied to this scenario to compare overall cost and value. Proposals were also reviewed for completeness, clarity, and ability to support ongoing City needs. A tabulated comparison of all bids using this evaluation scenario is included as Exhibit A.

All ten (10) proposals were reviewed and evaluated using a consistent approach. Based on overall cost, completeness, and ability to perform the work, South Texas Tree Service is determined to provide the best overall value to the City.

****PROPOSALS CAN BE ACCESSED HERE***

FINANCIAL IMPACT: Funding for services will be utilized on an as-needed basis. Individual projects will be scoped and authorized through task orders issued per project. Task orders will be presented to the City Council for approval prior to work proceeding.

RECOMMENDATION: Award RFP 26-05 to lowest responsible proposer.

To provide flexibility for varying project conditions, the City may also consider utilizing additional qualified contractors such as:

- Lyellco, Inc. for cost-efficient routine work
- The Foresight (Synthesist) for more complex or specialized conditions

ATTACHMENTS:
Agenda Item - RFP #26-05 Tree Clearing Mulching and ROW Maintenance Services (002).pdf
Bid Summary FINAL.pdf
RFP 26-05 Package_FINAL .pdf

City of Lago Vista, Texas
RFP No. 26-05 – Tree Clearing, Mulching, and ROW Maintenance Services

1. Purpose

This memorandum summarizes the evaluation and recommendation for RFP No. 26-05 for tree clearing, mulching, and right-of-way (ROW) maintenance services.

2. Background

The City solicited proposals for on-call services to support routine maintenance, drainage improvements, and roadway accessibility. Proposals were requested to include unit pricing for ROW clearing, drainage ditch clearing, land clearing, mulching, and emergency work.
A total of ten (10) proposals were received.

3. Evaluation Methodology

Because proposals were submitted in varying formats, staff evaluated all bids using a consistent comparison approach based on typical City work:

- 1,000 LF – ROW Clearing
- 500 LF – Drainage Ditch Clearing
- 1 Acre – Land Clearing
- 1 Acre – Large Area Mulching

Each proposer's pricing was applied to this scenario to compare overall cost and value. Proposals were also reviewed for completeness, clarity, and ability to support ongoing City needs. A tabulated comparison of all bids using this evaluation scenario is included as Exhibit A.

4. General Observations

- Most proposers submitted pricing within a reasonable and competitive range, with expected variation based on approach and scope assumptions.
- Some proposals were higher due to specialized equipment or service models.
- A small number of proposals included pricing structures or values that were not competitive for routine City work.
- The tabulated bid evaluation (Exhibit A) reflects the normalized comparison of all ten (10) proposals.

5. Proposal Highlights

5.1. **South Texas Tree Service** submitted complete and consistent pricing across all categories and demonstrated the most balanced and competitive overall cost.

5.2. **Lyellco, Inc.** submitted the lowest unit pricing but with limited detail in certain categories, which may introduce some performance risk depending on project scope.

5.3. **The Foresight (Synthesist)** provided a well-structured proposal with clear pricing tiers, particularly suited for more complex or constrained work conditions.
5.4. **WCA** and **Urban Foresters** submitted consistent but higher pricing relative to leading proposals.
5.5. **S&M Pro Construction** and **Ethoscapes** submitted acceptable proposals but were less competitive overall or did not fully cover all categories.
5.6. **UTZ Environmental** provided clearly structured pricing but at significantly higher unit costs and without full category coverage, making it less suitable for routine work.
5.7. **Unity Contractor Services** utilized a crew-based pricing structure that resulted in significantly higher overall costs compared to other proposers.
5.8. **Lynx Contractors** submitted pricing that was substantially higher than all other proposals and not representative of typical unit costs. While reviewed, the proposal was not considered a viable option for award.

Based on the tabulated evaluation, South Texas Tree Service provided the most complete and balanced pricing across all service categories.

6. Recommendation

Staff recommends award to: **South Texas Tree Service**
This recommendation is based on the results of the normalized bid evaluation (Exhibit A), including:

- Competitive and well-balanced pricing across all service categories
- Complete and consistent unit pricing
- Ability to support a range of routine and on-call work

7. Additional Consideration

To provide flexibility for varying project conditions, the City may also consider utilizing additional qualified contractors such as:

- **Lyellco, Inc.** for cost-efficient routine work
- **The Foresight (Synthesist)** for more complex or specialized conditions

8. Conclusion

All ten (10) proposals were reviewed and evaluated using a consistent approach. Based on overall cost, completeness, and ability to perform the work, South Texas Tree Service is determined to provide the best overall value to the City.

Exhibit A - Tabulated Bid Evaluation

Rank	Contractor	ROW Cost	Ditch Cost	Sub Total	Acre Clearing	Mulching	Total Evaluated Cost	Notes
1	South Texas Tree Service	$ 1,150.00	$ 625.00	$ 1,775.00	$ 3,000.00	$ 2,800.00	$ 7,575.00	Complete, balanced pricing
2	Lyellco, Inc.	$ 1,050.00	$ 525.00	$ 1,575.00	$ 2,950.00	$ -	$ 4,525.00	Lowest cost, incomplete categories
3	The Foresight (Synthesist)	$ 6,216.67	$ 4,362.50	$ 10,579.17	$ 6,250.00	$ 4,750.00	$ 21,579.17	Structured, higher cost
4	WCA	$ 5,000.00	$ 2,500.00	$ 7,500.00	$ 9,500.00	$ 8,500.00	$ 25,500.00	Consistent mid-range
5	Urban Foresters	$ 8,500.00	$ 4,250.00	$ 12,750.00	$ 6,000.00	$ 6,000.00	$ 24,750.00	Higher LF, bundled mulching
6	S&M Pro Construction	$ 9,000.00	$ 6,250.00	$ 15,250.00	$13,939.20	$ 6,534.00	$ 35,723.20	Pricing for Clear and mulching convert from SF to AC
7	Ethoscapes	$ 5,600.00	$ 2,800.00	$ 8,400.00	$24,393.60	$ 24,393.60	$ 57,187.20	Pricing for Clear and mulching convert from SF to AC
8	Unity Contractor Services	$ 32,000.00	$ 24,500.00	$ 56,500.00	$ 5,985.00	$ 6,845.00	$ 69,330.00	Crew-based pricing, high cost
9	UTZ Environmental	$ 70,000.00	$ 21,250.00	$ 91,250.00	$ 2,750.00	$ 3,083.33	$ 97,083.33	High LF pricing
10	Lynx Contractors	$1,500,000.00	$1,750,000.00	$3,250,000.00	$87,120.00	$ -	$ 3,337,120.00	Not representative of market pricing

Contractor	ROW $/LF	Ditch $/LF		Acre Clearing	Mulching Acre
South Texas Tree Service	$ 1.15	$ 1.25		$ 3,000.00	$ 2,800.00
Lyellco, Inc.	$ 1.05	$ 1.05		$ 2,950.00	$ -
The Foresight (Synthesist)	$ 6.22	$ 8.73		$ 6,250.00	$ 4,750.00
WCA	$ 5.00	$ 5.00		$ 9,500.00	$ 8,500.00
Urban Foresters	$ 8.50	$ 8.50		$ 6,000.00	$ 6,000.00
S&M Pro Construction	$ 9.00	$ 12.50		$13,939.20	$ 6,534.00
Ethoscapes	$ 5.60	$ 5.60		$24,393.60	$ 24,393.60
Unity Contractor Services	$ 32.00	$ 49.00		$ 5,985.00	$ 6,845.00
UTZ Environmental	$ 70.00	$ 42.50		$ 2,750.00	$ 3,083.33
Lynx Contractors	$ 1,500.00	$ 3,500.00		$87,120.00	$ -

CITY OF
LAGO VISTA
TEXAS

REQUEST FOR SEALED PROPOSALS

For

Project Title: Tree Clearing, Mulching, and ROW Maintenance Services

RFP No. 26-05 Tree Clearing, Mulching, and ROW Maintenance Services

Issued: April 6, 2026

Pre-Submittal Conference: April 16, 2026, 10:00am CST Local Time

Proposal Submission Deadline: April 30, 2026, 1:00pm CST Local Time

NO LATE PROPOSALS SHALL BE ACCEPTED

<u>RESPONSES SHALL BE DELIVERED SEALED TO</u>: CITY OF LAGO VISTA City of Lago Vista 5803 Thunderbird St. Lago Vista, Texas 78645	**<u>Or RESPONSES SHALL BE MAILED TO:</u>** CITY OF LAGO VISTA City of Lago Vista P.O. Box 4727 Lago Vista, Texas 78645
PRE-SUBMITTAL CONFERENCE WILL BE HELD VIA : **April 16, 2026 at 10:00 AM CST** **At 5803 Thunderbird Street** **Lago Vista, TX 78645** **City Council Conference Room**	**NAME AND ADDRESS OF COMPANY SUBMITTING PROPOSALS:**
FOR ADDITIONAL INFORMATION **REGARDING THIS RFP PLEASE CONTACT:** **Eric De La Cruz** **eric.delacruz@lagovistatexas.gov**	**Contact Person:** **Title:** **Phone: ( )** **Fax: ( )** **Email:**
RETURN THIS COVER SHEET AS INTENT RESPONSE TO: Charles West City Manager City of Lago Vista 5803 Thunderbird Street Lago Vista, Texas 78645	**Signature:** **Printed:**

REQUEST FOR SEALED PROPOSALS

The City of Lago Vista is requesting sealed proposals and unit-price proposals from qualified companies/individuals to provide tree clearing, mulching, brush removal, and right-of-way (ROW) maintenance services on an as-needed basis throughout the City.

Services may be required for public streets, drainage easements, utility easements, parkland, undeveloped City-owned parcels, and other locations as identified by the City.

An optional pre-submittal conference will be held on Thursday April 16, 2026 at 10:00 A.M. at 5803 Thunderbird Street, Lago Vista, Texas 78645 in the City Council Conference Room.

The City intends to award one or more contracts to firms determined to be the most qualified and responsive based on experience, pricing, and ability to meet the City's needs.

1.0 SUBMISSION OF PROPOSALS

Proposals shall be submitted through one the following options: by mail to City of Lago Vista, P.O. Box 4727, Lago Vista, TX, 78645, City of Lago Vista 5803 Thunderbird St. Lago Vista, TX 78645 or **SEALED** in person at City Hall, 5803 Thunderbird, Lago Vista, TX, 78645. All materials shall be easily printed on standard 8.5 x11 paper.

1.1 Facsimile transmittals or offers communicated by telephone will not be accepted or considered.

1.2 If the proposer desires not to submit a Proposal at this time, but wishes to remain on the commodity notification list, please submit a "**No Quote**" response (same time/location). The City of Lago Vista is always very conscious and extremely appreciative of the time and effort expended to submit a proposal. However, on "No Quote" responses please communicate any qualification requirement(s) which may have influenced your decision to "No Quote."

1.3 If a response is not received in the form of a "Request for Proposal" or "No Quote" for three (3) consecutive proposals, Proposer shall be removed from said notification list. However, if you choose to "No Quote" at this time but desire to remain on the notification list for other commodities, please state the specific product/service for which your agency wishes to be classified.

2.0 DELIVERY OF PROPOSALS

Submittals must be received no later than **1:00 p.m., April 30, 2026**. The submitting Proposer is responsible for the means of delivering the Proposal to the location listed in paragraph 1 on time. Delays due to any instrumentality used to transmit the Proposals including delay occasioned by the Proposer or faults in email delivery will be the responsibility of the Proposer. Proposals must be completed and delivered in sufficient time to avoid disqualification for lateness due to difficulties in delivery. The time and date recorded on the envelope of the submittal is the official clock for determining whether submittals are submitted timely. Proposals will not be opened until after the submittal deadline. City Staff may confirm receipt of submissions upon request but will not open or otherwise confirm completeness of submissions until after the passage of the submittal deadline. **Late Proposal documents and Unsealed Proposals will not be accepted under any circumstances.**

3.0 PROPRIETARY INFORMATION

3.1 If a Proposer does not desire proprietary information in the Proposal to be disclosed, it is required to identify all proprietary information in the Proposal. This identification will be done by individually marking each page with the words "Proprietary Information" on which such proprietary information is found. If the Proposer fails to identify proprietary information, it agrees that by submission of its Proposal those sections shall be deemed non-proprietary and made available upon public request.

3.2 Proposers are advised that the City, to the extent permitted by law, will protect the confidentiality of their Proposal. Proposer shall consider the implications of the Texas Public Information Act, particularly after the RFP process has ceased and the Contract has been awarded. While there are provisions in the Texas Public Information Act to protect proprietary information, where the Proposer can meet certain evidentiary standards, please be advised that a determination on whether those standards have been met will not be decided by the City of Lago Vista, but by the Office of the Attorney General of the State of Texas. In the event a request for public information is made, the City will notify the Proposer, who may then request an opinion from the Attorney General pursuant to 552.305, Texas Government Code. The City will not make a request to the Attorney General.

4.0 COMPLETION OF RESPONSES

4.1 Information presented in the Proposals will be used to evaluate the professional proposals of the Proposer(s) and to determine the Proposer(s) which will be selected to provide services to the City.

4.2 Responses shall be completed in accordance with the requirements of this RFP. Statements made by a Proposer shall be without ambiguity, and with adequate elaboration, where necessary, for clear understanding.

5.0 CLARIFICATIONS AND ISSUANCE OF ADDENDA

5.1 Any explanation, clarification, or interpretation desired by a Proposer regarding any part of this RFP must be requested from the City of Lago Vista at least three (3) days prior to the published submission deadline, as referenced in Section 2.0 of this RFP.

5.2 If the City, in its sole discretion, determines that a clarification is required, such clarification shall be issued in writing. Interpretations, corrections, or changes to the RFP made in any other manner other than writing are not binding upon the City, and Proposers shall not rely upon such interpretations, corrections or changes. Oral explanations or instructions given before the award of the Contract are not binding.

5.3 Requests for explanations or clarifications should be submitted via email to Eric.DeLaCruz@lagovistatexas.gov. Emails must clearly identify the RFP Number and Title.

5.4 Any interpretations, corrections or changes to this RFP will be made by addendum. Sole issuing authority of addenda shall be vested in the City of Lago Vista. Proposers shall acknowledge receipt of all addenda within the responses.

6.0 WITHDRAWAL OF PROPOSALS

A representative of the company may withdraw a Proposal at any time **prior to** the RFP submission deadline, upon presentation of acceptable identification as a representative of such company.

7.0 AWARD OF CONTRACT

7.1 It is understood that the City reserves the right to request additional information, waive immaterial errors or omissions, to accept or reject any and all Proposals, or to re-solicit for Proposals, as it shall deem to be in the best interests of the City of Lago Vista. Receipt and consideration of any Proposals shall under no circumstances obligate the City of Lago Vista to accept any Proposals. If an award of contract is made, it shall be made to the proposer offering the most qualified, and responsive proposal at the best value to the City. In determining the best value for the City, the City may consider:

7.1.1 the proposal Fees;
7.1.2 the reputation of the proposer and of the proposer's services;
7.1.3 the quality of the proposer 's services;
7.1.4 the extent to which the services meet the municipality's needs;
7.1.5 the proposer 's past relationship with the municipality;
7.1.6 the impact on the ability of the municipality to comply with laws and rules relating to contracting with historically underutilized businesses and nonprofit organizations employing persons with disabilities;
7.1.7 the total long-term cost to the municipality to acquire the services; and
7.1.8 any relevant criteria specifically listed in the request for proposals.
7.1.9 For projects over $1.5MM the municipality will attempt to award project to lowest responsible bidder.

7.2 The City reserves the right to award a single contract or multiple contracts by section listed in the Scope of Work.

7.3 Tentative Schedule of Events

RFP Release Date	4/6/2026		
Questions Submittal	4/27/2026	at 5:00 PM CST	Emailed to eric.delacruz@lagovistatexas.gov
Optional Pre-Submittal Conference	4/16/2026	at 10:00 AM CST	At 5803 Thunderbird Street, Lago Vista, Texas 78645 in the City Council Conference Room.
Proposal Due Date	4/30/2026	at 1:00 PM CST	Mail or hand deliver SEALED to City of Lago Vista 5803Thunderbird Lago Vista, Texas 78645 or P.O. Box 4272 Lago Vista, TX 78645
Proposals Opening	4/30/2026	at 1:00 PM CST	Publicly read aloud in Council Chambers

8.0 PERIOD OF ACCEPTANCE

Proposer acknowledges that by submitting the Proposal, Proposer makes an offer that, if accepted in whole or part by the City, constitutes a valid and binding contract as to any and all items accepted in writing by the City**.** The period of acceptance of proposals is one hundred and eighty (180) calendar days from the date of opening, unless the Proposer notes a different period.

9.0 TAX EXEMPTION

The City of Lago Vista is exempt from Federal Excise and State Sale Tax; therefore, tax must not be included in any contract that may be awarded from this RFP.

10.0 COST INCURRED IN RESPONDING

All costs directly or indirectly related to preparation of a response to the RFP or any oral presentation required to supplement and/or clarify a Proposal which may be required by the City shall be the sole responsibility of and shall be borne by the participating Proposers.

11.0 NEGOTIATIONS

The City reserves the right to negotiate all elements that comprise the successful Contractor's response to ensure that the best possible consideration be afforded to all concerned.

12.0 NON-ENDORSEMENT

If a Proposal is accepted, the successful Proposer, hereinafter "Contractor," shall not issue any news releases or other statements pertaining to the award or servicing of the Contract that state or imply the City of Lago Vista's endorsement of the successful Proposer's services.

13.0 UNAUTHORIZED COMMUNICATIONS

After release of this solicitation, Proposers' contact regarding this RFP with members of the RFP evaluation, interview or selection panels, employees of the City or officials of the City other than the City Manager, Buyer, or as otherwise indicated is prohibited and may result in disqualification from this procurement process. No officer, employee, agent or representative of the Proposers shall have any contact or discussion, verbal or written, with any members of the City Council, members of the RFP evaluation, interview, or selection panels, City staff or City's Contractors, or directly or indirectly through others, seek to influence any City Council member, City staff, or City's Contractors regarding any matters pertaining to this solicitation, except as herein provided. If a representative of any Proposers violates the foregoing prohibition by contacting any of the above listed parties with whom contact is not authorized, such contact may result in the Proposers being disqualified from the procurement process. Any oral communications are considered unofficial and non-binding with regard to this RFP.

14.0 PROJECT BACKGROUND

The Lago Vista is a growing community located in Travis County along the north shore of Lake Travis. The City encompasses approximately 16.7 square miles of land area and maintains an extensive transportation network consisting of over 100 miles of public streets and roadways.

Due to the City's terrain, vegetation density, and continued growth, ongoing right-of-way (ROW) maintenance is essential to ensure safe travel conditions, maintain visibility, protect infrastructure, and support drainage functionality. Many roadways are bordered by natural vegetation, undeveloped land, and easements that require periodic clearing and maintenance.

The City routinely performs maintenance activities across its roadway network, drainage corridors, utility easements, and City-owned properties. These efforts are critical to preserving public safety, preventing stormwater obstruction, and maintaining access for utilities and emergency services.

15.0 SCOPE OF WORK

The selected contractor(s) shall provide labor, equipment, supervision, and materials necessary to perform the following services, including but

not limited to:

A. Right-of-Way and Easement Clearing
   a. Clearing of trees, brush, and vegetation within public ROWs and easements
   b. Selective clearing to maintain sight distance, drainage conveyance, and utility access
   c. Removal of downed trees and storm-damaged vegetation
   d. Trimming and removal around utilities, fences, and drainage features

B. Mulching and Grinding
   a. On-site mulching of cleared vegetation using forestry mulchers or similar equipment
   b. Mulch depth and finish consistent with City direction
   c. Disposal or redistribution of mulch as directed

C. Land Clearing (City-Owned Property)
   a. Clearing of undeveloped parcels for drainage, access, infrastructure projects, or maintenance
   b. Selective or full clearing depending on task order
   c. Preservation of designated trees or vegetation where required

D. Restoration and Cleanup
   a. Removal of debris not suitable for mulching
   b. Restoration of disturbed areas as directed (grading, smoothing, seed, or stabilization if required)
   c. Protection of adjacent private property

Task Orders

Work will be authorized through written task orders issued by the City. Each task order will define:

- Location and limits of work
- Scope and clearing requirements
- Pricing method (LF, SF, acre, or lump sum based on unit prices)
- Schedule and completion timeline

16.0 QUALIFICATIONS

Proposing firms must demonstrate:

- Experience performing municipal ROW and land clearing projects
- Ownership or access to appropriate clearing and mulching equipment
- Familiarity with working around utilities and drainage infrastructure
- Ability to mobilize quickly for routine or emergency work

17.0 SUBMITTALS

In order for your submittal to be considered, the following information should be submitted with your proposal:

1) **Pricing Structure**
   Proposers shall submit **unit pricing** based on the following categories. The City may use one or more pricing methods depending on the task:

   Linear Foot (LF) Pricing
   - ROW or easement clearing (by width category, if applicable)
   - Drainage ditch or channel clearing

   Square Foot (SF) or Acre Pricing
   - Land clearing of City-owned parcels
   - Large-area mulching operations

   Hourly Rates (Optional)
   - Emergency or specialty work not suited to unit pricing

   Unit prices shall be **all-inclusive**, including labor, equipment, mobilization, fuel, insurance, and overhead. No minimum quantities are guaranteed.

2) **Firm Information**
   - Legal name, address, and contact information.

3) **Relevant Experience**
   - Description of similar municipal or utility-related projects.

4) **Pricing Proposal**
   - Completed unit price schedule.

5) **References**
   - Minimum of three (3) municipal or governmental references.

6) **Insurance and Certification**
   - Proof of required or statement of ability to comply.

18.0 PROPOSAL EVALUATION PROCESS

- The City anticipates selecting Proposer(s) that will be recommended to the City Council for award of a contract to provide the requested services to the City of Lago Vista.
- The City reserves the right to reject any or all proposals

19.0 BEST AND FINAL OFFER

The City reserves the right to request a best and final offer from any or all

companies. Discussions in accordance with the terms of a request for proposals and with regulations adopted by the governing body of the municipality may be conducted with Proposers who submit proposals and who are determined to be reasonably qualified for the award of the contract. Proposers shall be treated fairly and equally with respect to any opportunity for discussion and revision of proposals. To obtain the best final offers, revisions may be permitted after submissions and before the award of the contract. The City also reserves the right to reject any or all proposals, with or without cause, re-issue the RFP, or proceed in any manner determined to be in the best interest of the City.

Attachment "A" Follows

Attachment "A"

OFFICIAL PROPOSAL FORM and CERTIFICATION FOR THE CITY OF LAGO VISTA, TEXAS

This certification must be submitted with the proposal.

Honorable Mayor and City Council Members:

The undersigned hereby proposes to furnish and deliver FOB destination point as listed on a future Purchase Order or Notice of Award.

To furnish all materials and labor in accordance with the scope of work described in the Proposal for the specified lump sum, subject to all conditions shown therein and the City's Specifications and General Terms and Condition Specifications. When issued, Letters of Clarification shall automatically become part of this Proposal document and shall supersede any previous specifications or provisions in conflict with the Letters of Clarification. It is the responsibility of the Proposer to ensure that it has obtained such letters. By submitting a Proposal on this project, Proposer shall be deemed to have received all Letters of Clarification and to have incorporated them into its Proposal.

The City may accept this Proposal offer by issuance of a Notice of Award Letter and/or a Purchase Order covering award of said Proposal to this Proposer at any time on or before the 120th day following the day this Official Proposal Form is opened by the City. This offer shall be irrevocable for 120 days after Proposal opening, or for 90 days after City Council awards the Proposal, whichever comes last, but this period may be extended by written agreement of the parties.

THIS PROPOSER IS AND REPRESENTS THAT IT IS AN EQUAL OPPORTUNITY EMPLOYER

The undersigned hereby offers to furnish and deliver the materials and/or services as specified at the prices and terms herein stated and in accordance with the Request for Proposal, Clarification Letters, and any General Terms and Condition Specifications that they City might have issued in connection with this solicitation, all of which are made a part of this offer.

All pages of The City of Lago Vista's form, including but not limited to the General Terms and Conditions, Specifications and page one of this Proposal invitation are incorporated by reference into this Proposal for all purposes.

NOTICE TO ALL NEW CONTRACTORS WHO HAVE NOT CONDUCTED BUSINESS WITH THE CITY OF LAGO VISTA

FEDERAL FORM W9 REQUIREMENT:

The "Request for Taxpayer Identification Number and Certification" Federal Form W-9 should be filled out and returned with your proposal. This form is available from any

Federal Office or from The City of Lago Vista Finance Office and has not been included as part of this Proposal package. The form should be mailed to The City of Lago Vista, 5803 Thunderbird, Lago Vista, TX 78645.

This form is **REQUIRED** to be on file **BEFORE** we can conduct any business with any Contractor. Submitting this form will assist us in setting your company up as a certified Contractor of The City of Lago Vista.

PROPOSERS CERTIFICATION:

I, the undersigned, by signing the following statement agree that I have read and understand all of the terms and conditions, specifications, and requirements contained on each page of this Request for Proposal. I also understand that if this proposal is accepted by The City of Lago Vista that all of the terms and conditions, specifications, and requirements submitted in my proposal and any additions, changes, or deletions made during negotiations will be made a part of this proposal under a binding contract between my company and The City of Lago Vista, Texas. I also certify that this proposal is made without previous understanding, agreement, or connection with any person, firm, or corporation making a proposal for the same materials, and is in all fair and without collusion or fraud:

OUR company is a (Check One):

Corporation ___ (The Proposal MUST be signed by an Officer of the company)

Partnership ___ (The Proposal MUST be signed by a General Partner)

Joint Venture ___ (The Proposal MUST be signed by an Officer of the company)

Sole Proprietor ___ (The Proposal MUST be signed by the Owner)

Is the company a small, minority, or woman-owned business enterprise?

MBE ___ WBE ___ SBE ___

Has the company been certified as a SMWBE by any governmental agency?

Yes ___ No ___

If yes, specify the governmental agency: _____

Date of certification: _____

LETTERS OF CLARIFICATION:

The Proposer acknowledges receipt of the following Letters of Clarification: (If you have not received any Letters of Clarification, then write NONE across the blanks). If you have received Letters of Clarification, then write beside the appropriate Letter of Clarification number the date received. ALL LETTERS OF CLARIFICATION RECEIVED SHOULD BE ATTACHED TO THE PROPOSAL.

LETTER OF CLARIFICATION # 1 _____

LETTER OF CLARIFICATION # 2 _____

LETTER OF CLARIFICATION # 3 _____

COMPANY NAME: _____

COMPANY ADDRESS: _____

CITY/STATE/ZIP:_____

COMPANY REPRESENTATIVE

NAME: _____

TELEPHONE #: _____ FAX#: _____

EMAIL:_____

SIGNATURE: _____

DATE: _____

Attachment "B"
HB 89 Form

Effective September 1, 2017, House Bill 89 Prohibition on Contracts with Companies Boycotting Israel states that a state agency and a political subdivision (which includes a city) may not enter a contract with a company for goods or services unless the contract contains a **written verification** from the company that; (i) it does not Boycott Israel; and (ii) will not Boycott Israel during the term of the contract.

"Boycott Israel" is defined to mean refusing to deal with, terminating business activities with, or otherwise taking any action that is intended to penalize, inflict economic harm on, or limit commercial relations specifically with Israel, or with a person or entity doing business in Israel or in an Israeli-controlled territory, but does not include an action made for ordinary business purposes.

"Company" is defined to mean a for-profit sole proprietorship, organization, association, corporation, partnership, joint venture, limited partnership, limited liability partnership, or limited liability company, including a wholly owned subsidiary, majority-owned subsidiary, parent company, or affiliate of those entities or business associations that exists to make a profit.

To Be Completed By Contractor:

"I,_____(Name of certifying official), the _____ (title or position of certifying official) of_____(name of company), does hereby verify on behalf of said company to the City that said company does not Boycott Israel and will not Boycott Israel (as that term is defined in Texas Government Code Section 808.001) during the term of this contract.

_____
Signature of Certifying Official

_____
Title

_____
Date

ATTACHMENT "C"

CONFLICT OF INTEREST DISCLOSURE REQUIREMENT

Pursuant to Chapter 176 of the Local Government Code, any person or agent of a person who contracts or seeks to contract for the sale or purchase of property, goods, or services with a local governmental entity (i.e., The City of Lago Vista) must disclose in the Questionnaire Form CIQ ("Questionnaire") the person's affiliation or business relationship that might cause a conflict of interest with the local governmental entity. Bylaw, the Questionnaire must be filed with the Lago Vista City Secretary no later than seven days after the date the person begins contract discussions or negotiations with the City or submits an application or response to a Request for Proposals or bids, correspondence, or another writing related to a potential Contract with the City. Updated Questionnaires must be filed in conformance with Chapter 176.

A copy of the Questionnaire Form CIQ is enclosed with the submittal documents. The form is also available at **http://www.ethics.state.tx.us/forms/CIQ.pdf.**

Questions about compliance shall be directed to the Proposer's legal counsel.

Compliance is the individual responsibility of each person or agent of a person who is subject to the filing requirement. An offense Under Chapter 176 is a Class C misdemeanor

CONFLICT OF INTEREST QUESTIONNAIRE

For vendor doing business with local governmental entity

FORM CIQ

This questionnaire reflects changes made to the law by H.B. 23, 84th Leg., Regular Session.

This questionnaire is being filed in accordance with Chapter 176, Local Government Code, by a vendor who has a business relationship as defined by Section 176.001(1-a) with a local governmental entity and the vendor meets requirements under Section 176.006(a).

By law this questionnaire must be filed with the records administrator of the local governmental entity not later than the 7th business day after the date the vendor becomes aware of facts that require the statement to be filed. *See* Section 176.006(a-1), Local Government Code.

A vendor commits an offense if the vendor knowingly violates Section 176.006, Local Government Code. An offense under this section is a misdemeanor.

OFFICE USE ONLY

Date Received

1 **Name of vendor who has a business relationship with local governmental entity.**

2 ☐ **Check this box if you are filing an update to a previously filed questionnaire.**

(The law requires that you file an updated completed questionnaire with the appropriate filing authority not later than the 7th business day after the date on which you became aware that the originally filed questionnaire was incomplete or inaccurate.)

3 **Name of local government officer about whom the information in this section is being disclosed.**

_____

Name of Officer

This section (item 3 including subparts A, B, C, & D) must be completed for each officer with whom the vendor has an employment or other business relationship as defined by Section 176.001(1-a), Local Government Code. Attach additional pages to this Form CIQ as necessary.

A. Is the local government officer named in this section receiving or likely to receive taxable income, other than investment income, from the vendor?

☐ Yes ☐ No

B. Is the vendor receiving or likely to receive taxable income, other than investment income, from or at the direction of the local government officer named in this section AND the taxable income is not received from the local governmental entity?

☐ Yes ☐ No

C. Is the filer of this questionnaire employed by a corporation or other business entity with respect to which the local government officer serves as an officer or director, or holds an ownership interest of one percent or more?

☐ Yes ☐ No

D. Describe each employment or business and family relationship with the local government officer named in this section.

4

_____ _____

Signature of vendor doing business with the governmental entity Date

Adopted 8/7/2015

ATTACHMENT "D"

CITY OF LAGO VISTA

INSURANCE REQUIREMENT AFFIDAVIT

To Be Completed By Insurance Agent/Broker and Responder

I, the undersigned Agent/Broker, reviewed the insurance requirement contained in this proposal document. If the Proposer shown below is awarded this contract by the City of Lago Vista, I will be able to, within fifteen (15) days of notification of such award, furnish a valid insurance certificate to the City of Lago Vista meeting all the insurance requirements in this proposal.

Insurance Coverage Reviewed: _____

Agent's Name: _____

Agency Name: _____

Address: _____

City / State / ZIP: _____

Telephone No. ( ) _____ Fax No. ( ) _____

Proposer's Name and Company: _____

RFP Number and Title: _____

Insurance Agent / Broker Signature: _____ Date: _____

By submitting a proposal and signing below I affirm the following: I am aware of all costs to provide the required insurance, will do so pending contract award, and will provide a valid insurance certificate meeting all requirements within fifteen days of notification of award.

If the above fifteen-day requirement is not met, the City of Lago Vista has the right to reject this proposal and award the contract to the next lowest proposer meeting specifications. If you have any questions concerning these requirements, please contact the City Manager (512) 267-1155.

Proposer's Signature: _____ Date: _____

ATTACHMENT "E"

DRUG-FREE WORKPLACE CERTIFICATION

The_____(company name) will provide a Drug Free Workplace in compliance with the Drug Free Workplace Act of 1988. The unlawful manufacture, distribution, dispensing, possession, or use of a controlled substance is prohibited on the premise of the _____ (company name) or any of its facilities. Any employee who violates this prohibition will be subject to disciplinary action up to and including termination. All employees, as a condition of employment, will comply with this policy.

CERTIFICATION REGARDING DRUG-FREE WORKPLACE

The undersigned Contractor certifies it will provide a drug-free workplace by:

Publishing a policy statement notifying employees that the unlawful manufacture, distribution, dispensing, possession, or use of a controlled substance is prohibited in the workplace and specifying the consequences of any such action by an employee;

Establishing an ongoing drug-free awareness program to inform employees of the dangers of drug abuse in the workplace, the Contractor's policy of maintaining a drug-free workplace, the availability of counseling, rehabilitation and employee assistance programs, and the penalties that may be imposed on employees for drug violations in the workplace;

Providing each employee with a copy of the Contractor's policy statement;

Notifying the employees in the Contractor's policy statement that as a condition of employment under this contract, employees shall abide by the terms of the policy statement and notifying the Contractor in writing within five days after any conviction for a violation by the employee of a criminal drug abuse statue in the workplace;

Notifying the City within ten (10) days of the Contractor's receipt of a notice of a conviction of any employee; and,

Taking appropriate personnel action against an employee convicted of violating a criminal drug statue or requires such employee to participate in a drug abuse assistance or rehabilitation program.

_____

Name of Organization / Contractor(s)

_____

Signature of Authorized Representative:

_____

Date:

AGENDA ITEM NO. X.1

Item Cover Page

CITY COUNCIL AGENDA ITEM REPORT

DATE: May 21, 2026

SUBMITTED BY: Jordan Strohmeyer, Development Services

SUBJECT: Update regarding HB 2844 regarding food trucks.

AGENDA ITEM NO. X.2

Item Cover Page

CITY COUNCIL AGENDA ITEM REPORT

DATE: May 21, 2026

SUBMITTED BY: Charles West, City Manager

SUBJECT: Budget Work session.

ATTACHMENTS:
2026-04-09-Lago_Vista_FY2027_Budget_Calendar.pdf

City of Lago Vista

FY 2027 Budget Preparation Calendar

(Fiscal Year: October 01, 2026 – September 30, 2027)

Executive Summary

This memo requests Council approval of the City's FY 2027 budget preparation calendar. The schedule aligns internal planning milestones with required statutory deadlines in Texas Local Government Code Chapter 102 and Texas Property Tax Code truth-in-taxation provisions, and incorporates GFOA recommended budget practices to enhance transparency, performance alignment, and long-range sustainability.

Background / Discussion

Texas law requires the budget officer to prepare and file a proposed budget for public inspection at least 30 days before the City's tax levy, conduct a public hearing after the 15th day following filing and before the levy, and adopt the budget by ordinance with a record vote at the conclusion of the hearing. Truth-in-taxation requirements under the Tax Code require specific calculations, notice, hearing, and adoption steps when the proposed tax rate exceeds statutory thresholds. The attached calendar provides a compliant roadmap for FY 2027.

Fiscal Impact

None, this is strictly an operational and procedural function to streamline and ensure an efficient annual budget preparation process

Recommendation

Approve the FY 2027 Budget Preparation Calendar and direct staff to proceed with the outlined process and public engagement milestones.

Respectfully submitted,
Charles West

FY 2027 Budget Preparation Calendar (Presentation Format)

Key statutory anchor dates shown below are based on a recommended tax levy/adoption meeting of September 15, 2026. Adjust dates if the Council selects a different levy/adoption meeting date. (Dates may be adjusted if needed)

Date / Month	Major Activities
January–February 2026	Strategic planning and multi-year forecast update; review/update budget policies; issue budget instructions and calendar (GFOA). In January of each year at the first City Council Workshop staff will present a Postmortem review of the previous year's budget.
March 2026	Department operating and capital requests due; revenue and expenditure forecast update; CIP review begins (GFOA).
April 2026	Develop preliminary draft budget; align with strategic goals, service levels, and performance measures (GFOA).
May 2026	Management review and balancing; refine CIP and operating impacts; draft budget message, assumptions, and major changes (GFOA). Schedule dates and times of Council budget workshops.
June 2026	Council budget workshop(s); incorporate Council direction; prepare public-facing budget summary (GFOA transparency).
August 16, 2026[1]	File proposed budget with City Secretary/Clerk for public inspection (≥30 days before tax levy meeting of September 15, 2026).
August 2–22, 2026[2]	Publish budget hearing notice in a newspaper of general circulation (10–30 days before the budget hearing).
September 1, 2026[3]	Earliest permissible budget public hearing date (after the 15th day following filing).
September 15, 2026[4]	Hold budget hearing and adopt budget ordinance with record vote at the conclusion of the hearing; adopt tax rate/levy consistent with Tax Code truth-in-taxation requirements.
October 1, 2026	FY 2027 begins; implement budget; begin monthly monitoring and reporting cadence (GFOA).
October 2026–September 2027	Ongoing: budget monitoring, quarterly reporting, and amendments as needed; update long-range forecast (GFOA).

Statutory Citations (Footnote References)

[1] Texas Local Government Code §102.005(a) – Proposed budget filed with municipal clerk before the 30th day before the date the governing body makes its tax levy.

[2] Texas Local Government Code §102.006(c) and common practice guidance – Provide public notice of the budget hearing; publication typically 10–30 days before the hearing (see Texas city attorney guidance).

[3] Texas Local Government Code §102.006(b) – Hearing must be set for a date after the 15th day after filing and before the tax levy.

[4] Texas Local Government Code §102.007 – Action on the proposed budget at the conclusion of the public hearing; adoption vote must be a record vote. Truth-in-taxation: Texas Tax Code §§26.05–26.07 (and related provisions) govern notices/hearing/vote on tax rate.