AGENDA
CITY COUNCIL REGULAR MEETING
CITY COUNCIL CHAMBERS
5803 THUNDERBIRD
LAGO VISTA, TX
JUNE 4, 2026 AT 3:00 PM

REGULAR SESSION WILL RECONVENE AT 4:00PM

JOIN MEETING VIA VIDEO CONFERENCE

Please join my meeting from your computer, tablet or smartphone.
https://meet.goto.com/242387805
You can also dial in using your phone.
Access Code: 242-387-805
United States: +1 (646) 749-3122

I. CALL TO ORDER, CALL OF ROLL

Shane Saum, Mayor
Amanda Chavarria, Council Member
Jess Hall, Council Member
Adam Benefield, Council Member
Norma Owen, Mayor Pro Tem
Karen Van Ness, Council Member
Paul Prince, Council Member

II. EXECUTIVE SESSION

Convene into a closed Executive Session pursuant to;

1. Consultation with City Attorney pursuant to Texas Government Code § 551.071 regarding legal issues related to one or more items listed on this agenda, where confidential attorney-client advice is necessary.

2. Deliberation regarding the purchase, exchange, lease, or value of real property pursuant to Texas Government Code § 551.072, and consultation with the City Attorney regarding legal issues related to the same pursuant to Texas Government Code § 551.071.Consult with City Attorney concerning the purchase of property Pursuant to Texas Government Code Section 551.072.

3. Executive Session in Accordance with the Provisions of the Government Code, Title 5, Subchapter D, Section 551.071, Private Consultation with Its Attorney to Seek Advice About Legal Matters Subject to Attorney/Client Privilege, and Section 551.074, Deliberation

Regarding the Appointment, Employment, Evaluation, Reassignment, Duties, Discipline, or Dismissal of a Public Officer or Employee.

A. Receipt of legal advice from City Attorney regarding legal questions related to Charter and interpretation thereof.
B. Deliberation regarding respective duties and role of city manager and council regarding city personnel.

III. ACTION ON EXECUTIVE SESSION ITEMS (action and/or vote may be taken on the following agenda items):

Reconvene from Executive Session into open session to act as deemed appropriate in City Council's discretion regarding:

1. Consultation with City Attorney pursuant to Texas Government Code § 551.071 regarding legal issues related to one or more items listed on this agenda, where confidential attorney-client advice is necessary.

2. Deliberation regarding the purchase, exchange, lease, or value of real property pursuant to Texas Government Code § 551.072, and consultation with the City Attorney regarding legal issues related to the same pursuant to Texas Government Code § 551.071.Consult with City Attorney concerning the purchase of property Pursuant to Texas Government Code Section 551.072.

3. Executive Session in Accordance with the Provisions of the Government Code, Title 5, Subchapter D, Section 551.071, Private Consultation with Its Attorney to Seek Advice About Legal Matters Subject to Attorney/Client Privilege, and Section 551.074, Deliberation Regarding the Appointment, Employment, Evaluation, Reassignment, Duties, Discipline, or Dismissal of a Public Officer or Employee.

   A. Receipt of legal advice from City Attorney regarding legal questions related to Charter and interpretation thereof.
   B. Deliberation regarding respective duties and role of city manager and council regarding city personnel.

IV. INVOCATION

V. PLEDGE OF ALLEGIANCE, PLEDGE TO TEXAS FLAG

VI. CITIZEN COMMENTS

In accordance with the Open Meetings Act, Council is prohibited from acting or discussing (other than factual responses to specific questions) any items not on the agenda.

To participate in the citizen comments portion of the meeting, you must submit a completed form. If you are attending the meeting in the City Council Chambers you must complete the form available at that location and provide it to the Mayor prior to the start of the meeting. If you will be participating using the online videoconferencing tool, you must complete the form and submit it by email in accordance with the instructions included within the form. It is found on the City's website at the link below. The Council will reconvene from executive session at or around 4:00

p.m.

Citizen Participation Registration Form

VII. PRESENTATIONS & PROCLAMATIONS

1. Proclamation Honoring the Service of Presiding Judge Jay Caballero.

VIII. PUBLIC HEARING AND POSSIBLE ACTION

1. Open a public hearing on Ordinance No. 26-06-04-01 of the city of Lago Vista, Texas, amending chapter 14, also known as the "zoning ordinance," of the code of ordinances, specifically section 20, tree preservation and landscaping requirements, subsection (e)(7), by removing the word "pocket"; providing for purpose and intent; providing the amendment; providing for a finding of fact; providing for severability; providing for a repealer; providing an effective date; providing for projects in transition; providing for codification and publication; and providing an open meetings clause.

2. Consider, discuss, and take action on Ordinance No. 26-06-04-01 of the city of Lago Vista, Texas, amending chapter 14, also known as the "zoning ordinance," of the code of ordinances, specifically section 20, tree preservation and landscaping requirements, subsection (e)(7), by removing the word "pocket"; providing for purpose and intent; providing the amendment; providing for a finding of fact; providing for severability; providing for a repealer; providing an effective date; providing for projects in transition; providing for codification and publication; and providing an open meetings clause.

3. Open a public hearing regarding the voluntary annexation of approximately 4.949 acres located at 7301 Lohman Ford Road, also known as Lot 27, Travis Hollow Section Two, from the City of Lago Vista Extraterritorial Jurisdiction (ETJ) into the corporate limits of the City of Lago Vista, Texas.

IX. CONSENT AGENDA

All matters listed under Consent Agenda, are to be considered routine by the City Council and will be enacted by one motion. There will not be separate discussion on these items. If discussion is desired, that item will be removed from the consent agenda and will be considered separately.

1. Approve the minutes of the May 21, 2026, City Council Meeting .

2. Ratify Ordinance No. 26-05-07-03, rezoning approximately 7.055 acres located at 19708 Boggy Ford Road, legally described as ABS 189, Survey 98, Campbell M. F., and also known as Lot 32, Ranch Cielo, from TR-1 to a Planned Development District pursuant to Chapter 14, Section 10 of the City of Lago Vista Code of Ordinances. Case No. 25-2905-PDD-REZ.

X. ACTION ITEMS

1. Consider, discuss, and take action on Ordinance No. 26-06-04-02 Amending Chapter 3, "Building Regulations," of the City of Lago Vista Code of Ordinances; Adopting Updated Building, Residential, Fire, Existing Building, Mechanical, Plumbing, Fuel Gas, Swimming

Pool, Electrical, and Life Safety Codes; Providing for Local Amendments, Administrative Procedures, Permit Requirements, Permit Expiration and Extension Procedures, Design Criteria, Development Procedure Manual References, and Related Building Regulation Requirements; Providing for Conflicts, Severability, Savings, Publication, and an Effective Date.

2. Consider, discuss, and take action regarding funding for Bowden Point and Dawn Drive Parks.

3. Consider, discuss, and take action regarding application for the use of Hot Funds by Oak Ridge Archery.

4. Consider, discuss, and take possible action on award of of the Automated Weather Observing System (AWOS III PT) Replacement and Relocation Project at Rusty Allen Airport, TxDOT CSJ No. 26AWLAGOV and authorizing the City Manager to execute contract documents.

XI. WORK SESSION

1. Consider, discuss, and take action on the Draft City of Lago Vista Comprehensive Plan and the Comprehensive Plan Subcommittee Recommendation.

2. Consider, discuss, and take action on an Ordinance XXXXXXX Adopting the City of Lago Vista Development Procedures Manual and Establishing Administrative Procedures for Development Review, Permitting, Application Processing, and Related Development Services Activities

3. Discussion and possible direction regarding the establishment of workshop meeting dates and times for reviewing proposed Charter amendments, including the anticipated review schedule, process for Council discussion, and timeline for preparing any proposed amendments for future ballot consideration.

4. Discussion and possible direction regarding the feasibility of establishing bike trails within the Cedar Breaks area.

5. Discussion and possible direction regarding the City's efforts to move toward Type I effluent standards, including an update on the status of the related permit application.

6. Discussion and possible direction regarding the submission of comments to the Lower Colorado Regional Water Planning Group, Region K, concerning the Regional Water Plan and the State Water Plan.

7. Discussion and possible direction regarding potential applications to the Texas Water Development Board.

XII. ITEMS OF COMMUNITY INTEREST

XIII. STAFF AND COUNCIL LIAISON REPORTS

A. Routine Reports from City Staff.

B. Routine Reports from City Council Board/Commission/Committee Liaisons.

XIV. ADJOURNMENT

IT IS HEREBY CERTIFIED that the above Notice was posted on the Bulletin Board in accordance with Government Code section 551.041 located at all times in City Hall in said City by 6:00 pm on the 29th day of May 2026.

_____

Charles West, City Manager

THIS MEETING SHALL BE CONDUCTED PURSUANT TO THE TEXAS GOVERNMENT CODE SECTION 551.001 ET SEQ. AT ANY TIME DURING THE MEETING THE COUNCIL RESERVES THE RIGHT TO ADJOURN INTO EXECUTIVE SESSION ON ANY OF THE ABOVE POSTED AGENDA ITEMS IN ACCORDANCE WITH THE SECTIONS 551.071, 551.072, 551.073, 551.074, 551.075 OR 551.076.

THE CITY OF LAGO VISTA IS COMMITTED TO COMPLIANCE WITH THE AMERICANS WITH DISABILITIES ACT. REASONABLE MODIFICATIONS AND EQUAL ACCESS TO COMMUNICATIONS WILL BE PROVIDED UPON REQUEST.

AT THIS MEETING AT THE STATED LOCATION, A QUORUM OF THE CITY COUNCIL WILL BE PHYSICALLY PRESENT, AND THIS NOTICE SPECIFIES THE INTENT TO HAVE A QUORUM PRESENT THERE, AND THE MEMBER OF THE CITY COUNCIL PRESIDING OVER THE MEETING WILL BE PHYSICALLY PRESENT AT THAT LOCATION. ONE OR MORE MEMBERS OF THE CITY COUNCIL MAY PARTICIPATE IN THIS MEETING REMOTELY, AND IF SO, VIDEOCONFERENCE EQUIPMENT PROVIDING TWO-WAY AUDIO AND VIDEO DISPLAY AND COMMUNICATION WITH EACH MEMBER WHO IS PARTICIPATING BY VIDEOCONFERENCE CALL WILL BE MADE AVAILABLE.

2025-2026-Adopted-Budget-PDF

AGENDA ITEM NO. II.3

Item Cover Page

CITY COUNCIL AGENDA ITEM REPORT

DATE: June 4, 2026

SUBMITTED BY: Charles West, City Manager

SUBJECT: Executive Session in Accordance with the Provisions of the Government Code, Title 5, Subchapter D, Section 551.071, Private Consultation with Its Attorney to Seek Advice About Legal Matters Subject to Attorney/Client Privilege, and Section 551.074, Deliberation Regarding the Appointment, Employment, Evaluation, Reassignment, Duties, Discipline, or Dismissal of a Public Officer or Employee.

A. Receipt of legal advice from City Attorney regarding legal questions related to Charter and interpretation thereof.
B. Deliberation regarding respective duties and role of city manager and council regarding city personnel.

AGENDA ITEM NO. III.3

Item Cover Page

CITY COUNCIL AGENDA ITEM REPORT

DATE: June 4, 2026

SUBMITTED BY: Charles West, City Manager

SUBJECT: Executive Session in Accordance with the Provisions of the Government Code, Title 5, Subchapter D, Section 551.071, Private Consultation with Its Attorney to Seek Advice About Legal Matters Subject to Attorney/Client Privilege, and Section 551.074, Deliberation Regarding the Appointment, Employment, Evaluation, Reassignment, Duties, Discipline, or Dismissal of a Public Officer or Employee.

A. Receipt of legal advice from City Attorney regarding legal questions related to Charter and interpretation thereof.
B. Deliberation regarding respective duties and role of city manager and council regarding city personnel.

Proclamation
Honoring the Service of Presiding Judge Jay Caballero

***WHEREAS**, Judge Jay Caballero has served with integrity, wisdom, and unwavering dedication as Presiding Judge, faithfully upholding the rule of law and ensuring fairness and justice for all; and*

***WHEREAS**, throughout his tenure, Judge Caballero demonstrated exemplary leadership, professionalism, and compassion in service to the court, the legal community, and the citizens he served; and*

***WHEREAS**, Judge Caballero's commitment to judicial excellence, ethical standards, and public trust has left a lasting and positive impact on the administration of justice; and*

***WHEREAS**, his distinguished career reflects a deep respect for the law, a tireless work ethic, and a sincere devotion to public service; and*

***WHEREAS**, upon the occasion of his resignation from office, it is fitting and proper to recognize and commend Judge Caballero for his many years of honorable service and contributions to the judiciary and community;*

***NOW, THEREFORE, BE IT PROCLAIMED**, I **Shane Saum, Mayor** of the City of Lago Vista hereby expresses its sincere gratitude and appreciation to **Judge Jay Caballero** for his outstanding service as Presiding Judge and extends best wishes for continued success, health, and happiness in all future endeavors.*

IN WITNESS WHEREOF, I have hereunto set my hand and caused the seal of the City of Lago Vista to be affixed this 4th day of June 2026.

City of Lago Vista, Texas

_____
Mayor, Shane Saum

AGENDA ITEM NO. VIII.1

Item Cover Page

CITY COUNCIL AGENDA ITEM REPORT

DATE: June 4, 2026

SUBMITTED BY: Jordan Strohmeyer, Development Services

SUBJECT: Open a public hearing on Ordinance No. 26-06-04-01 of the city of Lago Vista, Texas, amending chapter 14, also known as the "zoning ordinance," of the code of ordinances, specifically section 20, tree preservation and landscaping requirements, subsection (e)(7), by removing the word "pocket"; providing for purpose and intent; providing the amendment; providing for a finding of fact; providing for severability; providing for a repealer; providing an effective date; providing for projects in transition; providing for codification and publication; and providing an open meetings clause.

BACKGROUND: At the February 12, 2026 Planning and Zoning Commission meeting, during discussion of the Parkland Dedication and Fee-in-Lieu ordinance presented by the Parks and Recreation Advisory Committee, the Commission recommended removing the term "pocket" from Chapter 14, Section 20(E)(7) of the Tree Preservation and Landscaping Requirements. The existing language referencing "pocket parks" limits how tree mitigation funds may be applied within park-related improvements. Removing the term provides flexibility for the City to utilize mitigation funds for eligible improvements across the park system while maintaining compliance with the intent of the tree mitigation program. The proposed amendment:

1. does not change tree preservation standards
2. does not alter mitigation ratios
3. does not modify landscaping requirements
4. does not expand mitigation eligibility beyond parkland improvements
5. clarifies implementation consistent with adopted park planning priorities

This amendment supports alignment between the City's tree mitigation framework and ongoing park planning and capital improvement efforts. In accordance with zoning amendment procedures established by Texas Local Government Code Chapter 211 and the City's zoning ordinance, a public hearing before the Planning and Zoning Commission is required prior to City Council

action. Because publication timing requirements delayed the Planning and Zoning Commission hearing to April 15, 2026, the City Council agenda was required to post prior to receipt of the Commission's recommendation. Staff will provide the recommendation to Council once action is taken by the Commission.

ATTACHMENTS:

Ord__No__26-06-04-01_Tree_Mitigation.docx

ORDINANCE NO. 26-06-04-01

AN ORDINANCE OF THE CITY OF LAGO VISTA, TEXAS, AMENDING CHAPTER 14, ALSO KNOWN AS THE "ZONING ORDINANCE," OF THE CODE OF ORDINANCES, SPECIFICALLY SECTION 20, TREE PRESERVATION AND LANDSCAPING REQUIREMENTS, SUBSECTION (E)(7), BY REMOVING THE WORD "POCKET"; PROVIDING FOR PURPOSE AND INTENT; PROVIDING THE AMENDMENT; PROVIDING FOR A FINDING OF FACT; PROVIDING FOR SEVERABILITY; PROVIDING FOR A REPEALER; PROVIDING AN EFFECTIVE DATE; PROVIDING FOR PROJECTS IN TRANSITION; PROVIDING FOR CODIFICATION AND PUBLICATION; AND PROVIDING AN OPEN MEETINGS CLAUSE.

Whereas, the City of Lago Vista is a home-rule municipality organized and operating under the laws of the State of Texas; and

Whereas, The City Council of the City of Lago Vista, Texas, is authorized under Chapters 211 and 212 of the Texas Local Government Code to adopt and amend regulations governing land development, landscaping, and mitigation requirements; and

Whereas, Chapter 14 of the City's Code of Ordinances establishes tree preservation and landscaping standards intended to balance environmental protection with reasonable development practices; and

Whereas, Section 20 of Chapter 14, titled Tree Preservation and Landscaping Requirements, includes provisions related to tree mitigation and associated funding mechanisms; and

Whereas, The current language in Section 20(E)(7) includes the word "pocket," which has the effect of limiting the City's ability to allocate and utilize collected funds for tree mitigation and parkland improvements beyond a narrowly defined area; and

Whereas, The City Council finds that such limitation is unnecessarily restrictive and may hinder the effective implementation of tree mitigation efforts and parkland improvements that serve the broader community; and

Whereas, The City Council further finds that removing the word "pocket" will provide flexibility in the use of funds while continuing to support the intent of tree preservation and environmental stewardship; and

Whereas, In accordance with state law and the City's adopted zoning procedures, the proposed amendment was reviewed by the Planning and Zoning Commission and forwarded to the City Council for final consideration;

NOW, THEREFORE, BE IT ORDAINED BY THE CITY COUNCIL OF THE CITY OF LAGO VISTA, TEXAS, THAT:

Section 1. Purpose and Intent. The purpose of this ordinance is to amend the City's Zoning Ordinance by removing the word "pocket" from Section 20(E)(7) in order to eliminate unnecessary restrictions on the use of funds associated with tree mitigation and parkland improvements, thereby improving flexibility, administration, and overall public benefit.

Section 2. Amendment. Chapter 14, Section 20(E)(7) of the Code of Ordinances is hereby amended as follows:

The word "pocket" is hereby deleted wherever it appears within Section 20(E)(7).

The remaining language of Section 20(E)(7) shall remain unchanged except for the removal of the word identified above.

Section 3. Finding of Fact. All the above and foregoing recitals are hereby found to be true and correct legislative findings of the City and are incorporated herein as findings of fact.

Section 4. Severability. If any section, subsection, article, paragraph, sentence, clause, or word in this Ordinance is for any reason held to be invalid or unconstitutional by a court of competent jurisdiction, such holding shall not affect the validity of the remaining portions of this Ordinance, and the City Council hereby declares it would have passed such remaining portions of this Ordinance despite such invalidity, which remaining portions shall remain in full force and effect.

Section 5. Repealing. All ordinances and parts thereof in conflict herewith expressly repealed insofar as they conflict herewith. are hereby.

Section 6. Effective Date. This ordinance shall take effect immediately upon its passage and publication in accordance with the provisions of the Texas Local Government Code.

Section 7. Projects in Transition. Projects in transition shall be reviewed and regulated in accordance with the Code in effect at the time a complete application was filed.

Section 8. Codification and Publication. The City Secretary is hereby directed to record, codify, and publish the above mentioned amendments to the City's Code of Ordinances as authorized by Section 52.013 of the Texas Local Government Code.

Section 9. Open Meetings Clause. It is hereby officially found and determine that the meeting at which this Ordinance is passed was open to the public as required and that public notice of the time, place, and purpose of said meeting was given as required by the Open Meetings Act, Chapter 551 of the Texas Government Code.

PASSED AND APPROVED on the 4th day of June 2026.

CITY OF LAGO VISTA, TEXAS

_____
Shane Saum, Mayor

ATTEST:

_____
Eric De La Cruz, Assistant City Secretary

AGENDA ITEM NO. VIII.2

Item Cover Page

CITY COUNCIL AGENDA ITEM REPORT

DATE: June 4, 2026

SUBMITTED BY: Jordan Strohmeyer, Development Services

SUBJECT: Consider, discuss, and take action on Ordinance No. 26-06-04-01 of the city of Lago Vista, Texas, amending chapter 14, also known as the "zoning ordinance," of the code of ordinances, specifically section 20, tree preservation and landscaping requirements, subsection (e)(7), by removing the word "pocket"; providing for purpose and intent; providing the amendment; providing for a finding of fact; providing for severability; providing for a repealer; providing an effective date; providing for projects in transition; providing for codification and publication; and providing an open meetings clause.

BACKGROUND: At the February 12, 2026 Planning and Zoning Commission meeting, during discussion of the Parkland Dedication and Fee-in-Lieu ordinance presented by the Parks and Recreation Advisory Committee, the Commission recommended removing the term "pocket" from Chapter 14, Section 20(E)(7) of the Tree Preservation and Landscaping Requirements. The existing language referencing "pocket parks" limits how tree mitigation funds may be applied within park-related improvements. Removing the term provides flexibility for the City to utilize mitigation funds for eligible improvements across the park system while maintaining compliance with the intent of the tree mitigation program. The proposed amendment:

1. does not change tree preservation standards
2. does not alter mitigation ratios
3. does not modify landscaping requirements
4. does not expand mitigation eligibility beyond parkland improvements
5. clarifies implementation consistent with adopted park planning priorities

This amendment supports alignment between the City's tree mitigation framework and ongoing park planning and capital improvement efforts. In accordance with zoning amendment procedures established by Texas Local Government Code Chapter 211 and the City's zoning ordinance, a public hearing before the

Planning and Zoning Commission is required prior to City Council action. Because publication timing requirements delayed the Planning and Zoning Commission hearing to April 15, 2026, the City Council agenda was required to post prior to receipt of the Commission's recommendation. Staff will provide the recommendation to Council once action is taken by the Commission.

ATTACHMENTS:

Ord__No__26-06-04-01_Tree_Mitigation.docx

ORDINANCE NO. 26-06-04-01

AN ORDINANCE OF THE CITY OF LAGO VISTA, TEXAS, AMENDING CHAPTER 14, ALSO KNOWN AS THE "ZONING ORDINANCE," OF THE CODE OF ORDINANCES, SPECIFICALLY SECTION 20, TREE PRESERVATION AND LANDSCAPING REQUIREMENTS, SUBSECTION (E)(7), BY REMOVING THE WORD "POCKET"; PROVIDING FOR PURPOSE AND INTENT; PROVIDING THE AMENDMENT; PROVIDING FOR A FINDING OF FACT; PROVIDING FOR SEVERABILITY; PROVIDING FOR A REPEALER; PROVIDING AN EFFECTIVE DATE; PROVIDING FOR PROJECTS IN TRANSITION; PROVIDING FOR CODIFICATION AND PUBLICATION; AND PROVIDING AN OPEN MEETINGS CLAUSE.

Whereas, the City of Lago Vista is a home-rule municipality organized and operating under the laws of the State of Texas; and

Whereas, The City Council of the City of Lago Vista, Texas, is authorized under Chapters 211 and 212 of the Texas Local Government Code to adopt and amend regulations governing land development, landscaping, and mitigation requirements; and

Whereas, Chapter 14 of the City's Code of Ordinances establishes tree preservation and landscaping standards intended to balance environmental protection with reasonable development practices; and

Whereas, Section 20 of Chapter 14, titled Tree Preservation and Landscaping Requirements, includes provisions related to tree mitigation and associated funding mechanisms; and

Whereas, The current language in Section 20(E)(7) includes the word "pocket," which has the effect of limiting the City's ability to allocate and utilize collected funds for tree mitigation and parkland improvements beyond a narrowly defined area; and

Whereas, The City Council finds that such limitation is unnecessarily restrictive and may hinder the effective implementation of tree mitigation efforts and parkland improvements that serve the broader community; and

Whereas, The City Council further finds that removing the word "pocket" will provide flexibility in the use of funds while continuing to support the intent of tree preservation and environmental stewardship; and

Whereas, In accordance with state law and the City's adopted zoning procedures, the proposed amendment was reviewed by the Planning and Zoning Commission and forwarded to the City Council for final consideration;

NOW, THEREFORE, BE IT ORDAINED BY THE CITY COUNCIL OF THE CITY OF LAGO VISTA, TEXAS, THAT:

Section 1. Purpose and Intent. The purpose of this ordinance is to amend the City's Zoning Ordinance by removing the word "pocket" from Section 20(E)(7) in order to eliminate unnecessary restrictions on the use of funds associated with tree mitigation and parkland improvements, thereby improving flexibility, administration, and overall public benefit.

Section 2. Amendment. Chapter 14, Section 20(E)(7) of the Code of Ordinances is hereby amended as follows:

The word "pocket" is hereby deleted wherever it appears within Section 20(E)(7).

The remaining language of Section 20(E)(7) shall remain unchanged except for the removal of the word identified above.

Section 3. Finding of Fact. All the above and foregoing recitals are hereby found to be true and correct legislative findings of the City and are incorporated herein as findings of fact.

Section 4. Severability. If any section, subsection, article, paragraph, sentence, clause, or word in this Ordinance is for any reason held to be invalid or unconstitutional by a court of competent jurisdiction, such holding shall not affect the validity of the remaining portions of this Ordinance, and the City Council hereby declares it would have passed such remaining portions of this Ordinance despite such invalidity, which remaining portions shall remain in full force and effect.

Section 5. Repealing. All ordinances and parts thereof in conflict herewith expressly repealed insofar as they conflict herewith. are hereby.

Section 6. Effective Date. This ordinance shall take effect immediately upon its passage and publication in accordance with the provisions of the Texas Local Government Code.

Section 7. Projects in Transition. Projects in transition shall be reviewed and regulated in accordance with the Code in effect at the time a complete application was filed.

Section 8. Codification and Publication. The City Secretary is hereby directed to record, codify, and publish the above mentioned amendments to the City's Code of Ordinances as authorized by Section 52.013 of the Texas Local Government Code.

Section 9. Open Meetings Clause. It is hereby officially found and determine that the meeting at which this Ordinance is passed was open to the public as required and that public notice of the time, place, and purpose of said meeting was given as required by the Open Meetings Act, Chapter 551 of the Texas Government Code.

PASSED AND APPROVED on the 4th day of June 2026.

CITY OF LAGO VISTA, TEXAS

_____
Shane Saum, Mayor

ATTEST:

_____
Eric De La Cruz, Assistant City Secretary

AGENDA ITEM NO. VIII.3

Item Cover Page

CITY COUNCIL AGENDA ITEM REPORT

DATE: June 4, 2026

SUBMITTED BY: Jordan Strohmeyer, Development Services

SUBJECT: Open a public hearing regarding the voluntary annexation of approximately 4.949 acres located at 7301 Lohman Ford Road, also known as Lot 27, Travis Hollow Section Two, from the City of Lago Vista Extraterritorial Jurisdiction (ETJ) into the corporate limits of the City of Lago Vista, Texas.

BACKGROUND: The subject property consists of approximately 4.949 acres located at 7301 Lohman Ford Road and is currently located within the City of Lago Vista's extraterritorial jurisdiction (ETJ). The property owner has submitted a request for voluntary annexation into the City of Lago Vista to facilitate future development and permitting associated with the existing Texas Hills Storage facility and proposed future expansion.

On April 16, 2026, the City Council approved Resolution No. 26-2211 authorizing initiation of the voluntary annexation process for the subject property. On May 7, 2026, the City Council approved the associated Municipal Service Plan in accordance with Chapter 43 of the Texas Local Government Code.

The property is currently developed as an existing self-storage facility and is designated as Neighborhood Retail/Office/Commercial on the City's Future Land Use Map. The annexation request and associated zoning request are proceeding concurrently, with the property proposed to be zoned C-2 upon annexation.

Pursuant to applicable provisions of the Texas Local Government Code and City procedures, the City Council is required to conduct public hearings prior to consideration of an annexation ordinance. This item represents the first required public hearing for the proposed annexation. The second public hearing and consideration of the annexation ordinance are currently scheduled for June 18, 2026.

FINDINGS:

- The subject property consists of approximately 4.949 acres

located at 7301 Lohman Ford Road within the City of Lago Vista extraterritorial jurisdiction (ETJ).

- The applicant has requested voluntary annexation into the corporate limits of the City of Lago Vista to facilitate future development and permitting activities associated with the existing Texas Hills Storage facility.
- On April 16, 2026, the City Council approved Resolution No. 26-2211 authorizing initiation of the annexation process, and on May 7, 2026, approved the Municipal Service Plan associated with the proposed annexation.
- The Future Land Use designation for the property is Neighborhood Retail/Office/Commercial, and the proposed annexation and associated C-2 zoning request are generally consistent with the surrounding development pattern along the Lohman Ford Road corridor.
- Public notice for the proposed annexation hearing has been provided in accordance with applicable state law and City procedures.

RECOMMENDATION:

Open the public hearing, receive public comment regarding the proposed voluntary annexation of approximately 4.949 acres located at 7301 Lohman Ford Road, and close the public hearing. The item will return for a second public hearing on June 18th, 2026 where the ordinance will be read for consideration.

ATTACHMENTS:

Staff Report Annexation Texas Hills Storage.pdf
2026_05_7301 Lohman Annexation Signed Service Plan.pdf
Layout7301LohmanFordAN.pdf

Report Date: 5/12/2026

Case No.: 26-2964-R-REZ

Project Planner: Tam Pieklik

Item Details

Project Name: Texas Hills Storage – Rezoning

Project Location: 7301 Lohman Ford Rd, Lago Vista, TX 78645

Total Acreage: 4.949 Acres

Legal Description: Trt 27 Travis Hollow Sec. 2

Applicant: Chris Foster

Property Owner: Fosters Limited LLC

Request: Annexation of approximately 4.94 acres located at 7301 Lohman Ford Road from the City's extraterritorial Jurisdiction (ETJ) into the corporate city limits.

Case History: The applicant has applied for voluntary annexation into the City of Lago Vista for approximately 4.94 acres currently located within the City's extraterritorial jurisdiction (ETJ). The existing business, Texas Hills Storage, was originally constructed in 1995, with additional improvements completed in 1998, 2002, and 2005. The facility provides both climate-controlled and non-climate-controlled storage units.

The applicant intends to expand the business by adding additional storage facilities. The property is self-sufficient and will not connect to the City's water or wastewater systems. Access to the property is provided from Lohman Ford Road. The Future Land Use designation for the property is Neighborhood Retail/Office/Commercial, which is consistent with the existing and proposed use of the property. The annexation is being requested to facilitate future development and permitting requirements.

During the City Council meeting on April 16, 2026, the City Council approved Resolution No. 26-2211 to begin the voluntary annexation process for the approximately 4.949-acre Texas Hills Storage property located at 7301 Lohman Ford Road into the City of Lago Vista. Council generally agreed that annexation would provide the City with greater regulatory oversight of the property and any future expansion, while allowing the existing storage use to continue as a legal nonconforming use until the zoning and annexation processes are completed.

During the City Council meeting on May 7, 2026, City Council approved the Municipal Service Plan for the proposed annexation of approximately 4.949 acres located at 7301 Lohman Ford Road, commonly known as Lot 27, Travis Hollow Section Two. The service plan outlines the municipal services to be provided in accordance with state law and allows the annexation process to move forward to the required public hearing and ordinance stages. Staff also indicated that the annexation and zoning cases will proceed concurrently, with the property proposed to be zoned C-2 to accommodate the existing storage facility use and maintain compatibility with surrounding properties.

Overview of Applicants Request

The applicant submitted a Letter of Intent requesting voluntary annexation of the property located at 7301 Lohman Ford Road into the City of Lago Vista. The applicant stated their intent to align the property and business operations with the City's standards and contribute to the local community. Proposed improvements include expanding the existing storage facility by redeveloping a portion of the current parking lot into additional storage units to better serve local residents while improving the appearance and functionality of the site. The applicant also indicated the property is self-sufficient and will not require City water or wastewater services, resulting in no additional demand on municipal utility infrastructure. The applicant expressed support for coordinating future development with the City's comprehensive plan and participating in the local economy as a tax-paying entity.

Site Information

Location: 7301 Lohman Ford Road, Lago Vista, TX 78645

Physical and Natural Features: The subject property is approximately 4.95 acres located along Lohman Ford Road within the Texas Hill Country terrain of Lago Vista. The site is characterized by rolling topography, limestone-based soils, and native Central Texas vegetation typical of the Balcones Canyonlands region. The property is developed as a self-storage facility and is surrounded by a mix of commercial, residential, and undeveloped land uses. The area maintains a semi-rural character with scenic hill country views and proximity to Lake Travis

Future Land Use and Current Zoning: The subject property is currently located within the City of Lago Vista Extraterritorial Jurisdiction (ETJ) and is not presently zoned by the City. The Future Land Use designation for the property is Neighborhood Retail/Office/Commercial, which supports low- to moderate-intensity commercial and service-oriented development along the Lohman Ford Road corridor. The existing self-storage use is consistent with the future land use designation and surrounding development pattern.

Surrounding Properties: The surrounding properties along the Lohman Ford Road corridor consist of a mixture of commercial, residential, and undeveloped hill country tracts. Sun Hardware is located immediately adjacent to the property, and across Lohman Ford Road there is a proposed convenience store and restaurant currently under City review.

Direction	Zoning District	Future Land Use	Existing Use
North	**C-2**	**REGCOM**	**C-2**
South	**ETJ**	**NHGCOM**	**ETJ**
East	**ETJ**	**RULRES**	**ETJ**
West	**C-2**	**REGCOM**	**C-2**

Property History: The subject property is approximately 4.949 acres located at 7301 Lohman Ford Road and is currently developed as an existing self-storage facility known as Texas Hills Storage. The property has operated commercially within the City of Lago Vista Extraterritorial Jurisdiction (ETJ) and is adjacent

Utilities

Upon annexation, municipal services will be available to the subject property in accordance with the approved Municipal Service Plan and City regulations.

Proposed Zoning District and Use

C-2

Meeting Schedule

April 16, 2026 -City Council.

May 7, 2026 – City Council.

June 4, 2026- City Council.

June 11, 2026- Planning and Zoning Commission.

June 18, 2026-City Council.

Public Notification

As required by the Unified Development Code, all property owners and registered neighborhood associations within a 200-foot radius of the subject property were notified of the Zoning Map Amendment request (14 notices), a legal notice advertising the public hearing was placed in the Hill Country Newspaper (May 14, 2026) and signs were posted on-site. To date, staff has received 0 written comments in favor, and 0 in opposition to the request.

Attachments

Location Map

Municipal Service Plan

CITY OF LAGO VISTA
MUNICIPAL SERVICES PLAN
FOR ANNEXATION OF 4.949 ACRES ALSO KNOWN AS LOT 27, TRAVIS HOLLOW, SECTION TWO, ACCORDING TO THE MAP OR PLAT THEREOF, RECORDED IN VOLUME 78, PAGE 398, PLAT RECORDS, TRAVIS COUNTY, TEXAS; SAVE AND EXCEPT THAT PORTION CONVEYED TO TRAVIS COUNTY, TEXAS, RECORDED IN VOLUME 10662, PAGE 402, REAL PROPERTY RECORDS, TRAVIS COUNTY, TEXAS ETJ, LOCATED AT 7301 LOHMAN FORD ROAD IN LAGO VISTA TEXAS 78645 AND ADJACENT TO THE CITY OF LAGO VISTA MUNICIPAL LIMITS

Owner: Fosters Limited LLC
Acreage: 4.949 Acres

This Municipal Services Plan ("**Plan**") is entered into on this 7th day of May 2026 and between the City of Lago Vista, Texas, a home-rule municipality of the State of Texas ("**City**") and Foster Limited LLC ("**Owner**").

RECITALS

WHEREAS, the described tract is situated in Travis County, Texas, and consists of approximately 4.949 +/-acres of land situated in the City's extraterritorial jurisdiction, such property being more particularly described and set forth in Exhibit A attached and incorporated herein by reference ("**Property**");

WHEREAS, Fosters Limited LLC (the "**Owner**") has declined to enter into a Development Agreement with the City pursuant to Section 212.172 of Texas Local Government Code (as amended, the "**Development Agreement**") and is hereby voluntarily requesting full-purpose annexation of the Property;

WHEREAS, when a municipality elects to annex such an area, the municipality is required to enter into a written agreement with the property owner that sets forth services to be provided by the municipality for the properties in the affected area; and

WHEREAS, the City services to be provided for the Property on or after the effective date of annexation and provided for herein

NOW THEREFORE, in exchange for the mutual covenants, conditions and promises contained herein, City and Owner agree as follows:

1. **PROPERTY.** This Plan is only applicable to the Property, more specifically described in Exhibit A.

2. **INTENT.** It is the intent of the City that this Plan provide for the delivery of full, available municipal services to the Property in accordance with state law, which may be accomplished through any means permitted by law.

3. **MUNICIPAL SERVICES.** Commencing the effective date of annexation, the City will provide the municipal services set forth below. As used in this Plan, "providing services" includes having services provided by any method or means by which the City may extend municipal services to any other area of the City, including the City's infrastructure extension policies and developer or property owner participation in accordance with applicable City ordinances, and all approved rules, regulations, and policies.

   The City hereby declares the following services to be made available to the Property and its Owner(s):

   a. **Police Services.** Currently Police Services are Provided by Travis county, The City will Provide municipal police protection through Lago Vista Police Department and will provide the service to the area once annexed. The Police station is located at 5901 Municipal Complex Way, Lago Vista, TX 78645.

   b. **Fire Services.** The Property is within the ESD 1/TC ESD 1 Service Area. The Travis County ESD 1 Fire Department will provide aid through the Automatic Aid Agreement. such fire response services will be provided from the Travis County ESD 1 Fire Department (Station No. 1) located at 20624 FM 1431, Suite 5, Lago Vista, Texas, or future stations located in proximity to the Property. In addition, fire prevention activities will be provided by the Travis County ESD 1 Fire Marshalls office, as needed.

      ESD Service areas are shown on attached Exhibit "B."

   c. **Building Inspection/Code Enforcement Services.** The City of Lago Vista will provide building inspection and code enforcement services upon annexation. The Development Services Department will also assist in issuance and enforcement activities related to all other applicable City of Lago Vista Codes and regulations that apply to building construction within the City of Lago Vista. Building Inspection and Code Enforcement services are located at 5803 Thunderbird St #101, Lago Vista, TX 78645.

   d. **Libraries.** Lago Vista Public Library provides library services. The library is located at 5803 Thunderbird St Suite 40, Lago Vista, TX 78645.

   e. **Environmental Health & Health Code Enforcement.** The Travis County Health and Human Services Department will continue to oversee the enforcement of the State, County, and City of Lago Vista's health ordinances and regulations, for example, those related to inspections of commercial kitchens, mobile food vendors,

food preparation establishments, and handling operations. The City will perform other enforcement of the City of Lago Vista's health and sanitation ordinances and regulations, including but not limited to weed, brush control, and control over junked and abandoned vehicles. This service will be provided by the City's Code Enforcement Department and Police Department and shall begin in this Property on the effective date of the annexation. Additionally, the City's control of dilapidated structures will be handled by the City pursuant to its regulations and Code. These Services will be provided at 5803 Thunderbird St #101, Lago Vista, TX 78645.

f. **Planning & Zoning.** The planning and zoning jurisdiction of the City will be extended to this area on the effective date of the annexation ordinance. The planning and zoning of the Property will be in accordance with the terms and conditions set forth in the Development Agreement. All services provided by the City will be extended to the area on the effective date of the annexation ordinance. These services will be provided at 5803 Thunderbird St #101, Lago Vista, TX 78645.

g. **Parks & Recreation.** All services and amenities associated with the City's Parks and Recreation activities will extend to the Property on the effective date of the annexation ordinance. These services will be provided at 5803 Thunderbird St #101, Lago Vista, TX 78645.

h. **Streets & Drainage.** The City will maintain public streets over which the City has jurisdiction. Maintenance to the street facilities will continue to be provided in accordance with the City's policies and procedures for City streets and roadways. Travis County shall continue to be responsible for County Roads, and TxDOT shall continue to be responsible for State of Texas highways and farm to market roadways, pursuant to their statutory authorities. As new subdivisions and development occurs within the Property, the developers of property may be required to dedicate appropriate right-of-way and construct City streets in accordance with the City of Lago Vista's Subdivision Code, regulations, and policies that are in place at the time of the development. Upon completion of, dedication to, and the City's acceptance of, new streets and public rights-of-way, the City shall provide ongoing operation and maintenance for those streets, rights-of-way, and roadways.

The City will provide maintenance on existing public drainage systems and floodplain management of the Property. Developers will provide stormwater drainage and meet floodplain requirements as per the City's Code, regulations, and policies, and such facilities will be inspected by the City's Engineer at the time of completion of such facilities. The City will maintain public drainage facilities within the City right-of-way, as per the City's Code, regulations, and policies.

i. **Street Lighting.** The City will provide street lighting to the Property in any public right-of-way in accordance with standard City Policy as the Property develops.

j. **Traffic Engineering.** The City will provide, as appropriate, street names signs, traffic control devices, and other traffic system design improvements to the Property.

k. **Sanitation/Solid Waste Collection & Disposal.** The City does not directly provide municipal sanitation/solid waste collection and disposal services. However, the City has granted an exclusive franchise for these services to Progressive Waste Solutions of TX d/b/a Waste Connections of Texas, which will be notified of all newly-annexed parcels.

l. **Water Service.** The Property will be served by water service by the City of Lago Vista. Extension of services to serve the Property will be at the Owner's expense, at the time when they are requested.

m. **Sewer Service.** The Property will be served by wastewater service by the City of Lago Vista. Extension of services to serve the Property will be at the Owner's expense, at the time when they are requested.

n. **Miscellaneous.** All other applicable municipal services will be provided to the Property in accordance with policies established by the City.

It is understood and agreed that the City is not required to provide a service that is not included in this Agreement. The City departments listed above may change names or be re-organized by the City Manager. Any reference to a specific department also includes any subsequent City department that will provide the same or similar services.

5. **AUTHORITY.** City represents that they have full power, authority and legal right to execute, deliver and perform their obligations pursuant to this Plan.

6. **SEVERABILITY.** If any term or provision of this Plan is held to be illegal, invalid or unenforceable, the legality, validity or enforceability of the remaining terms or provisions of this Plan shall not be affected thereby, and in lieu of each such illegal, invalid or unenforceable term or provision, there shall be added automatically to this Plan a legal, valid or enforceable term or provision as similar as possible to the term or provision declared illegal, invalid, or unenforceable.

7. **INTERPRETATION.** The Parties to this covenant and agree that in any litigation relating to this Agreement, the terms and conditions of the Agreement will be interpreted according to the laws of the State of Texas. The Parties acknowledge that they are of equal bargaining power and that each of them was represented by legal counsel in the negotiation and drafting of this Agreement.

8. **GOVERNING LAW AND VENUE.** This Plan and all of the transactions contemplated herein shall be governed by and construed in accordance with the laws of the State of Texas. The provisions and obligations of this Plan are performable in Travis County, Texas such that exclusive venue for any action arising out of this Plan shall be in Travis County, Texas.

9. **NO WAIVER.** The failure of either Party to insist upon the performance of any term or provision of this Plan or to exercise any right granted hereunder shall not constitute a waiver of that Party's right to insist upon appropriate performance or to assert any such right on any future occasion.

10. **GOVERNMENTAL POWERS.** It is understood that by execution of this Plan, the City does not waive or surrender any of its governmental powers or immunities.

11. **COUNTERPARTS.** This Plan may be executed in any number of counterparts, each of which shall be deemed an original and constitute one and the same instrument.

12. **CAPTIONS.** The captions to the various clauses of this Plan are for informational purposes only and shall not alter the substance of the terms and conditions of this Plan.

13. **PLAN BINDS SUCCESSORS AND RUNS WITH THE LAND.** This Plan is binding on and inures to the benefit of the Parties, their successors, and assigns. The term of this Plan constitutes covenants running with the land comprising the Property and is binding on the Owner.

14. **ENTIRE PLAN.** It is understood and agreed that this Plan contains the entire agreement between the Parties and supersedes any and all prior agreements, arrangements or understandings between the Parties relating to the subject matter, except as may be set forth in the Development Agreement. No oral understandings, statements, promises or inducements contrary to the terms of this Plan exist. This Plan cannot be changed or terminated orally.

[The remainder of this page intentionally left blank.]

EXECUTED in multiple originals, and in full force and effect as of the Effective Date.

CITY:

City of Lago Vista, Texas a Texas home-rule municipal corporation

Attest:

By: Robin Smith
Name: Robin Smith
Title: City Secretary

By: Chad West
Name: Charles West
Title: City Manager

THE STATE OF TEXAS §

COUNTY OF TRAVIS §

This instrument was acknowledged before me on this 12 day of MAY, 2026, by Charles West, City Manager of the City of Lago Vista, Texas, a Texas home-rule municipal corporation, on behalf of said corporation.

(SEAL)

ROBBIE GAIL OWENS
Notary ID #5373491
My Commission Expires
May 23, 2029

Notary Public, State of Texas
Robbie Gail Owens

OWNER:

Fosters Limited, LLC
(a Texas limited Liability Company)

By: Fosters Limited, LLC
(a Texas limited liability company)

By: Christopher Foster
Name: Christopher Foster

Title: _____

THE STATE OF TEXAS §

COUNTY OF TRAVIS §

This instrument was acknowledged before me on the 12th day of MAY, 2026, by _____, _____of 2026, a ., a Texas limited liability company, on behalf of said entities.

(SEAL)

Notary Public, State of Texas

Robbie Gail Owens

ROBBIE GAIL OWENS
Notary ID #5373491
My Commission Expires
May 23, 2029

EXHIBIT A
PROPERTY

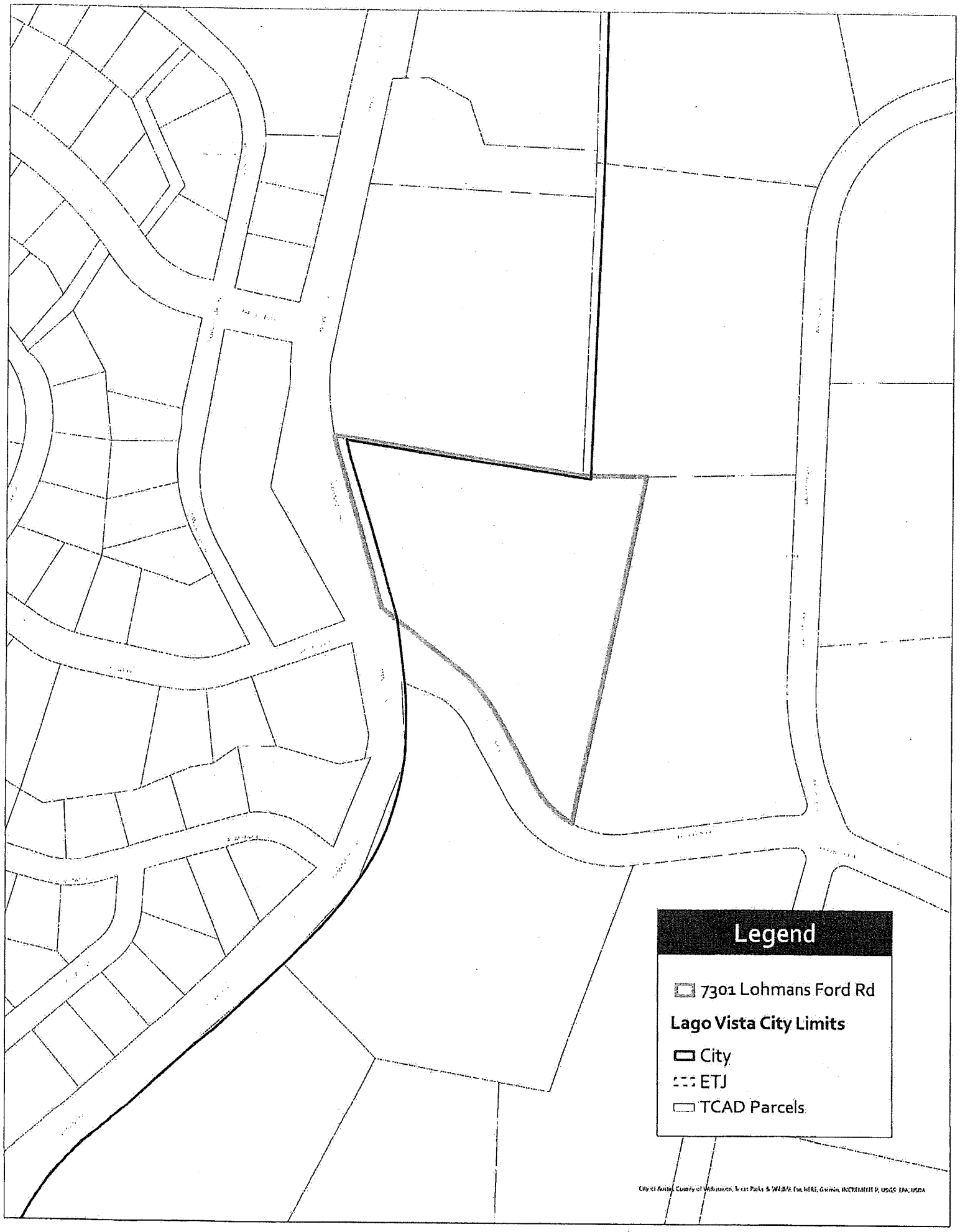

7301 Lohmans Ford Rd

N

0 100 200 400 Feet

EXHIBIT B
ESD SERVICE AREAS

TRAVIS COUNTY EMERGENCY SERVICE DISTRICTS

Travis County Transportation & Natural Resources

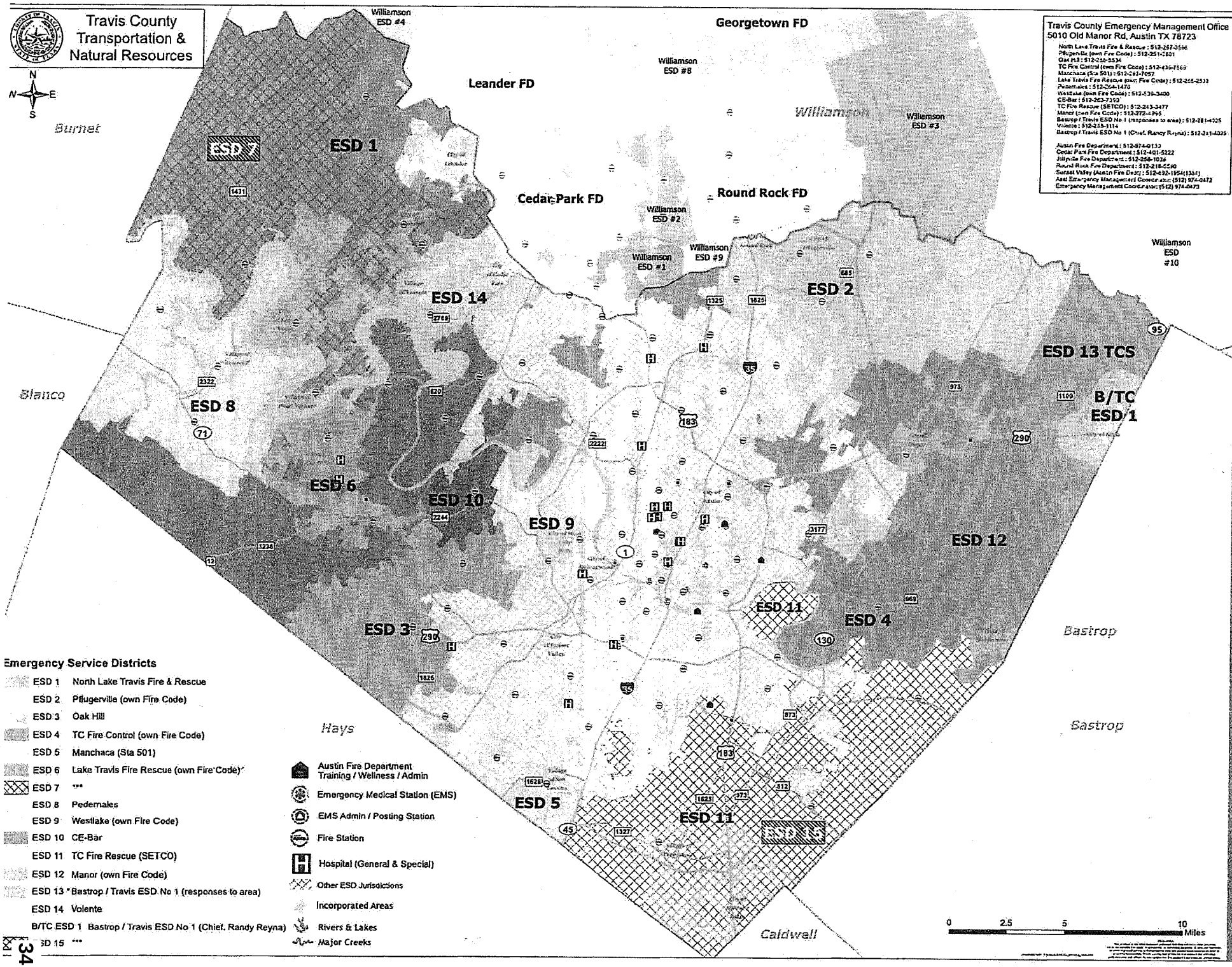

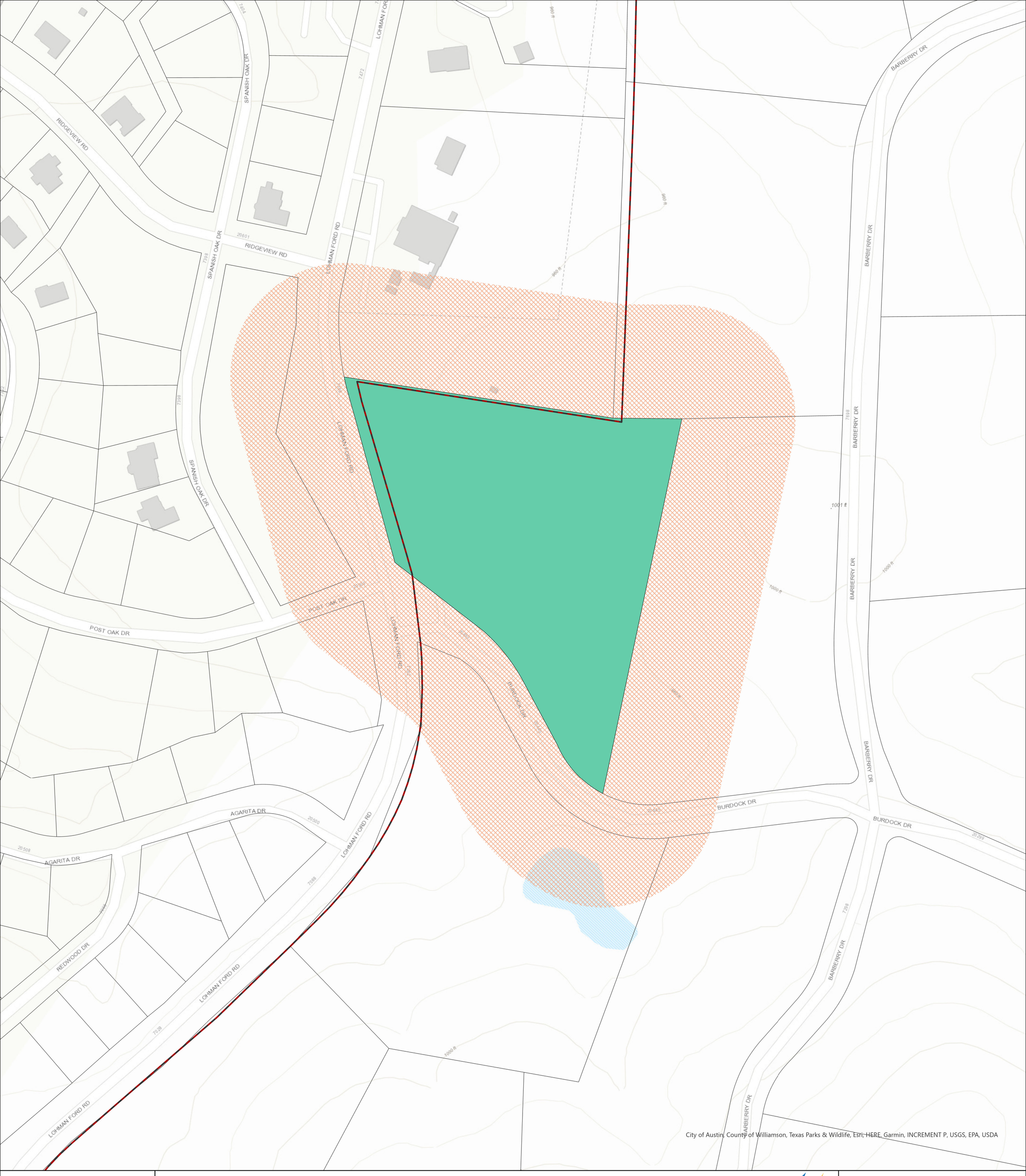

Legend

- Requestor
- Notification Boundary
- Lago Vista City Limits
- City
- ETJ
- TCAD Parcels

7301 LOHMAN FORD DRIVE

CITY OF LAGO VISTA TEXAS

Request Type	Annexation	Project	26-2933-AN
Board	City Council	Date	4/30/2026
Map Purpose	Notification	Drawn By	City of Lago Vista

Spatial Reference: NAD 1983 StatePlane Texas Central FIPS 4203 Feet

N

0 50 100 200 Feet

AGENDA ITEM NO. IX.1

Item Cover Page

CITY COUNCIL AGENDA ITEM REPORT

DATE: June 4, 2026

SUBMITTED BY: Robin Smith, City Secretary

SUBJECT: Approve the minutes of the May 21, 2026, City Council Meeting .

RECOMMENDATION: Approval of the May 21, 2026, City Council Meeting Minutes.

ATTACHMENTS:
26-05-21-Draft Minutes.pdf

CITY COUNCIL REGULAR
MEETING MINUTES
THURSDAY, MAY 21, 2026
3:00 PM
CITY COUNCIL CHAMBERS
5803 THUNDERBIRD
LAGO VISTA, TX

Shane Saum, Mayor
Adam Benefield, Member
Norma Owen, Mayor Pro Tem
Paul Prince, Member
Amanda Chavarria, Member
Karen Van Ness, Member
Jess Hall, Member
Charles West, City Manager
Brad Bullock, City Attorney

Present: Adam Benefield, Norma Owen, Paul Prince, Amanda Chavarria, Karen Van Ness, Jess Hall, Charles West, Brad Bullock
Absent: Mayor Saum - excused absence.

REGULAR SESSION WILL RECONVENE AT 4:00 PM

AMENDED AGENDA

JOIN MEETING VIA VIDEO CONFERENCE

Please join my meeting from your computer, tablet or smartphone.
https://meet.goto.com/242387805
You can also dial in using your phone.
Access Code: 242-387-805
United States: +1 (646) 749-3122

I. CALL TO ORDER, CALL OF ROLL

Meeting called to order at 3:01 PM

Shane Saum, Mayor
Amanda Chavarria, Council Member
Jess Hall, Council Member
Adam Benefield, Council Member
Norma Owen, Mayor Pro Tem
Karen Van Ness, Council Member
Paul Prince, Council Member

II. EXECUTIVE SESSION

Convene into a closed Executive Session pursuant to;
City Council convened into Executive session at 3:04 pm

1. Consultation with City Attorney pursuant to Texas Government Code § 551.071 regarding legal issues related to one or more items listed on this agenda, where confidential attorney-client advice is necessary.

2. Deliberation regarding the purchase, exchange, lease, or value of real property pursuant to

Texas Government Code § 551.072, and consultation with the City Attorney regarding legal issues related to the same pursuant to Texas Government Code § 551. 071. Consult with City Attorney concerning the purchase of property pursuant to Texas Government Code Section 551.072.

3. Consultation with the City Attorney pursuant to Texas Government Code Section 551.071 regarding the Firefly Cove Planned Development District Concept Plan and Detailed Plan Amendment request.

4. Pursuant to Texas Government Code Section 551.071, Consultation with legal counsel, to seek and receive legal advice from legal counsel regarding any and all documents, agreements, obligations, rights, duties, claims, and legal issues involving or related to Hines Lake Travis Land II Limited Partnership, Tessera HOA, and Lakeside at Tessera on Lake Travis.

5. Consultation with City Attorney pursuant to Texas Government Code Sec. 551.071 regarding complaint asserted against City Manager, C. West, to receive legal advice, and obtain direction and possible authorization of investigation.

6. Consultation with City Attorney pursuant to Texas Government Code Sec. 551.071 regarding complaint asserted against City Councilman, A. Benefield, to receive legal advice, and direction and possible authorization of investigation.

III. ACTION ON EXECUTIVE SESSION ITEMS (action and/or vote may be taken on the following agenda items): *Reconvene into Regular Session at: 4:07 pm.*
Reconvene from Executive Session into open session to act as deemed appropriate in City Council's discretion regarding:

Attorney Brad states in executive session discussed. Item 4 Hines - Tessera – Maintenance

*agreement with pool. Land purchase, firefly cove PDD***.**

1. Consultation with City Attorney pursuant to Texas Government Code § 551.071 regarding legal issues related to one or more items listed on this agenda, where confidential attorney-client advice is necessary.
   No action

2. Deliberation regarding the purchase, exchange, lease, or value of real property pursuant to Texas Government Code § 551.072, and consultation with the City Attorney regarding legal issues related to the same pursuant to Texas Government Code § 551. 071.Consult with City Attorney concerning the purchase of property Pursuant to Texas Government Code Section 551.072.

   Moved by Paul Prince; seconded by Amanda Chavarria to City Manager to proceed as directed in Executive session.

   Motion Passed: 6-0

Voting For: Adam Benefield, Norma Owen, Paul Prince, Amanda Chavarria, Karen Van Ness, Jess Hall

Voting Against: None

3. Consider, discuss, and take possible action regarding the Firefly Cove Planned Development District Concept Plan and Detailed Plan Amendment request.

   No action – City Council directed staff to take back to Planning & Zoning**.**

4. Pursuant to Texas Government Code Section 551.071, Consultation with legal counsel, to seek and receive legal advice from legal counsel regarding any and all documents, agreements, obligations, rights, duties, claims, and legal issues involving or related to Hines Lake Travis Land II Limited Partnership, Tessera HOA, and Lakeside at Tessera on Lake Travis.

   Moved by Paul Prince; seconded by Amanda Chavarria to Approve Non-renewal to Hines, Tessera.

   Motion Passed: 6-0

   Voting For: Adam Benefield, Norma Owen, Paul Prince, Amanda Chavarria, Karen Van Ness, Jess Hall

   Voting Against: None

5. Consultation with City Attorney pursuant to Texas Government Code Sec. 551.071 regarding complaint asserted against City Manager, C. West, to receive legal advice, and obtain direction and possible authorization of investigation.
   No Action

6. Consultation with City Attorney pursuant to Texas Government Code Sec. 551.071 regarding complaint asserted against City Councilman, A. Benefield, to receive legal advice, and direction and possible authorization of investigation.
   No Action

IV. INVOCATION

Led by Jaxx England with Northlake Church

V. PLEDGE OF ALLEGIANCE TO THE U.S. FLAG AND PLEDGE TO TEXAS FLAG

VI. PRESENTATIONS & PROCLAMATIONS

1. Proclamation Honoring the Lago Vista High School Graduating Seniors.
   Mayor Pro Tem, Norma Owen presented proclamation to Youth Advisory Members and Superintendent Mindy Curran.

VII. CITIZEN COMMENTS

In accordance with the Open Meetings Act, Council is prohibited from acting or discussing (other than factual responses to specific questions) any items not on the agenda.

Citizen Comments received by:
Mathew Weldon, Marlene Plua, David VonOhlerking.

VIII. CONSENT AGENDA

All matters listed under Consent Agenda, are to be considered routine by the City Council and will be enacted by one motion. There will not be separate discussions on these items. If discussion is desired, that item will be removed from the consent agenda and will be considered separately.

1. Ratify Ordinance No. 26-05-07-04, adopting the amended Rules of Procedure for the City Council, boards, and commissions.

   Moved by Adam Benefield; seconded by Amanda Chavarria to Approve.

   Motion Passed: 6-0

   Voting For: Adam Benefield, Norma Owen, Paul Prince, Amanda Chavarria, Karen Van Ness, Jess Hall

   Voting Against: None

2. Ratify Ordinance No. 26-05-07-03, rezoning approximately 7.055 acres located at 19708 Boggy Ford Road, legally described as ABS 189, Survey 98, Campbell M. F., and also known as Lot 32, Ranch Cielo, from TR-1 to a Planned Development District pursuant to Chapter 14, Section 10 of the City of Lago Vista Code of Ordinances. Case No. 25-2905-PDD-REZ.

   Moved by Amanda Chavarria; seconded by Paul Prince to table item and bring back

   on June 4, 2026 City Council Meeting.

   Motion Passed: 6-0

   Voting For: Adam Benefield, Norma Owen, Paul Prince, Amanda Chavarria, Karen Van Ness, Jess Hall

   Voting Against: None

3. Approve the minutes of the May 6, 2026, City Council called meeting.

Moved by Paul Prince; seconded by Amanda Chavarria to Approve.

Motion Passed: 6-0

Voting For: Adam Benefield, Norma Owen, Paul Prince, Amanda Chavarria, Karen Van Ness, Jess Hall

Voting Against: None

4. Approve the minutes of the May 7, 2026, City Council Meeting .

Moved by Paul Prince; seconded by Amanda Chavarria to Approve.

Motion Passed: 6-0

Voting For: Adam Benefield, Norma Owen, Paul Prince, Amanda Chavarria, Karen Van Ness, Jess Hall

Voting Against: None

IX. ACTION ITEMS

1. Consider, discuss, and take action on Ordinance No. 26-05-21-01 for the Unified Fee Schedule with Updates to the Development Services Department Fees.

Moved by Karen Van Ness; seconded by Jess Hall to Approve and be reviewed annually during budget.

Motion Passed: 6-0

Voting For: Adam Benefield, Norma Owen, Paul Prince, Amanda Chavarria, Karen Van Ness, Jess Hall

Voting Against: None

2. Consider, discuss, and take action regarding dormant or inactive Planned Development Districts, associated LUE or utility-capacity commitments, project vesting, and potential amendments to the City's PDD, project expiration, and dormancy procedures.
Citizen comment received by Lynda Aird and Paul Roberts.

Moved by Paul Prince; seconded by Jess Hall to Direct staff to review and locate five oldest properties for rezoning.

Motion Passed: 6-0

Voting For: Adam Benefield, Norma Owen, Paul Prince, Amanda Chavarria, Karen Van Ness, Jess Hall

Voting Against: None

3. Consider, discuss, and take action regarding the award of RFP No. 26-05 for Tree Clearing, Mulching, and Right-of-Way Maintenance Services to South Texas Tree Service and possible additional contractors, and authorize the City Manager to negotiate and execute agreement(s).

Moved by Paul Prince; seconded by Karen Van Ness to Accept staff recommendation on RFP 26-05 award to Lyellco, Inc and South Texas Tree Service.

Motion Passed: 6-0

Voting For: Adam Benefield, Norma Owen, Paul Prince, Amanda Chavarria, Karen Van Ness, Jess Hall

Voting Against: None

X. WORK SESSION

1. Update regarding HB 2844 regarding food trucks.
   Citizen comment received by David VonOhlerking.
   City attorney updates City Council on HB 2844.

2. Budget Work Session.
   City Manager, Charles West updates City Council where staff is in the budget process.

XI. ITEMS OF COMMUNITY INTEREST

Memorial Day event at Veterans Park on Monday from 9-11am.

XII. STAFF AND COUNCIL LIAISON REPORTS

A. Routine Reports from City Staff.

B. *City Manager updates City Council on staff accomplishments.*
Librarian Jan Steele updates Council on grant awarded and voting will take place at the library on Tues, May 26.

B. Routine Reports from City Council Board/Commission/Committee Liaisons.

Councilor Hall provided an update on the Golf Course Advisory Committee.

Councilor Chavarria reported that the Lago Vista Women's Club awarded $76,000 in scholarships to senior girls. She also noted that Keep Lago Vista Beautiful (KLVB) and the Parks and Recreation Advisory Committee (PRAC) will give a joint presentation at the next City Council meeting. KLVB also received funding from TxDOT, the Women's Club, and the Youth Advisory Council (YAC). The Building Standards Commission (BSC) will meet on June 3, the Labor Advisory Board (LAB) will meet on July 13, and the Unified Development Code (UDC) meeting is scheduled for June 5.

Councilor Van Ness reported that KLVB and PRAC are collaborating on park-related initiatives and will present at the June 4 City Council meeting.

Councilor Prince stated that the Planning and Zoning Commission requested additional training on land use issues. A training session is scheduled for May 28.

Mayor Pro Tem Owen reported that the Economic Development Corporation (EDC) met and provided an update. She also noted that an EDC subcommittee will meet next week. The Infrastructure Advisory Committee also met and provided an update.

City Council convened into Executive Session at 7:23 pm.
City Council reconvened into open session at 8:51 pm

XIII. ADJOURNMENT

Mayor Pro Tem adjourned the meeting at 9:04 pm.

CITY OF LAGO VISTA:

_____
Shane Saum, Mayor

ATTEST:

_____
Eric De La Cruz, Assistant City Secretary

On a motion by Councilmember _____, seconded by Councilmember _____, the above and foregoing instrument was passed and approved.

AGENDA ITEM NO. IX.2

Item Cover Page

CITY COUNCIL AGENDA ITEM REPORT

DATE: June 4, 2026

SUBMITTED BY: Jordan Strohmeyer, Development Services

SUBJECT: Ratify Ordinance No. 26-05-07-03, rezoning approximately 7.055 acres located at 19708 Boggy Ford Road, legally described as ABS 189, Survey 98, Campbell M. F., and also known as Lot 32, Ranch Cielo, from TR-1 to a Planned Development District pursuant to Chapter 14, Section 10 of the City of Lago Vista Code of Ordinances. Case No. 25-2905-PDD-REZ.

RECOMMENDATION: Ratify Ord. No. 26-05-07-03.

ATTACHMENTS:
2026-05-28-Boggy Ford Hotel PDD.pdf

ORDINANCE NO. 26-05-07-03

AN ORDINANCE OF THE CITY COUNCIL OF THE CITY OF LAGO VISTA, TEXAS, AMENDING THE OFFICIAL ZONING MAP BY CHANGING THE ZONING DISTRICT FOR THE PROPERTY LOCATED AT 19708 BOGGY FORD, APPROXIMATELY 7.055 ACRES OF LAND OWNED BY LAVERNE ESTATES LP, FROM TR-I ("TEMPORARY RESTRICTED") TO A PDD ("PLANNED DEVELOPMENT DISTRICT") WITH DESIGN APPROVAL TO BE REFERRED TO AS THE "LAVERNE ESTATES PLANNED DEVELOPMENT DISTRICT;" AND PROVIDING FOR RELATED MATTERS.

WHEREAS, Laverne Estates, LP acting by and through Arun Dendukuri, the owner of approximately 7.055 acres of land in at 19708 Boggy Ford Road in Lago Vista, Texas and in Travis County, Texas as more particularly described on the attached Exhibit "A" (described hereinafter as the "Property"), have requested that the Property be zoned as a PDD to be known as the "Laverne Estates Planned Development District," and

WHEREAS, the Property currently resides within the corporate limits of the City of Lago Vista;

WHEREAS, the conceptual plan for the Property is set forth in this "Laverne Estates PDD" Zoning Ordinance (the "Ordinance") and in Exhibit "B" attached hereto (the "Land Use Plan"), which identifies and designates various land uses for the Property as further described below;

WHEREAS, after giving ten (10) days written notice to the owners of land in and within 200-feet of the area being rezoned, as well as having published notice to the public at least fifteen (15) days prior to the date of such hearings, the Planning and Zoning Commission and City Council each held separate public hearings on the proposed rezoning of the Property included in this Ordinance; and

WHEREAS, the Planning and Zoning Commission at its public hearing held on January 8, 2026 and the City Council at its public hearing held on February 19, 2026, have both reviewed the request and the circumstances of the Property, and find that a substantial change in the circumstances of the Property, sufficient to warrant a change in the zoning of the Property, has transpired; and

WHEREAS, the City, by and through its legislative discretion, has adopted a comprehensive plan for the City of Lago Vista, and having considered and reviewed such comprehensive plan, the City Council finds the rezoning approved herein is consistent with the comprehensive plan which shall not be interpreted as inconsistent with this rezoning; and WHEREAS, the City desires that development within its corporate limits occur in an orderly manner in order to protect the health, safety, and welfare of its present and future citizens, protect property values and provide for the growth of the City's tax base; and

WHEREAS, the City desires to control the development standards for the Property, protect third party property owners in the City, and to ensure the benefits of planned development and an enhanced tax base that are achieved through rezoning the Property; and

WHEREAS, pursuant to Chapter 211 of the Texas Local Government Code, the City has the authority to zone and rezone property; and

WHEREAS, the City Council finds that it is necessary and proper for the good government, peace or order of the City of Lago Vista to adopt this Ordinance.

Now, THEREFORE, BE IT ORDAINED BY THE CITY COUNCIL OF THE CITY OF LAGO VISTA, TEXAS, THAT:

Section 1. Findings. The foregoing recitals are hereby found to be true and correct and are hereby adopted by the City Council and made a part hereof for all purposes as findings of fact. The Planning and Zoning Commission and City Council find that this Ordinance satisfies the requirements of Section 6.105, Section 10 and Section 13 of the City of Lago Vista Zoning Ordinance, codified under Ordinance No. 98-04-27-03, as amended (the "Zoning Code").

Section 2. Enactment. The Zoning Code and other applicable ordinances are hereby modified and amended by rezoning the Property as set forth in Section 3.

Section 3. Rezoned Property. The Zoning Code is hereby amended by zoning the Property, being the 7.055 acre tract of land described on Exhibit "A" attached to this Ordinance, as a PDD zoning district. The Property is hereby zoned as the "Laverne Estates Planned Development District" with the uses of individual land areas as set forth in this Ordinance. The proposed development will adopt the C-2 zoning district as its base zoning which corresponds to the designation of the land in the current Future Land Use map as published in the 2030 Comprehensive Master Plan passed by the Lago Vista City Council in May of 2016 (see Exhibit “A” for the official legal description of the property and the survey with the property boundaries).

Section 4. Amendment of Applicable Zoning Ordinances. The zoning requirements established in this Ordinance shall apply to the Property. The comprehensive zoning requirements of the Zoning Code and all other applicable ordinances, as they may be amended by this Ordinance, shall apply to the Property. Should any conflict appear between the requirements of the zoning and development ordinances of the City of Lago Vista as compared with the requirements for the Property set forth in this Ordinance, the requirements set forth in this Ordinance shall control. A building permit for the primary structure shall be issued within 48 months after this ordinance is approved, or the ordinance expires and the zoning reverts back to TR-1.

Section 5. Phasing within the PDD. The Property shall be developed in one phase in accordance with the Land Use Plan and as depicted in Exhibit "B", attached hereto and incorporated herein for all purposes. The development will consist of a Hotel (78 rooms in a building covering .42 acres), Restaurant housed in the hotel building, Spa also housed in the hotel building, Conference Center (separate building occupying .32 acres), and Casitas (6 individual buildings occupying .03 acres) with associated parking, stormwater treatment, stormwater detention, utilities, grading and access improvements. The subject property is 7.055 acres and is moderately wooded with significant topographic variation (approximately 76’ of elevation change across the site). The property contains numerous trees of native species (Live Oak, Cedar Elm), as well as non-native species such as Cedar trees (Ashe Juniper).

Section 6. Zoning Requirements. The following use and site development requirements established herein shall apply to the Property:

1. Zoning. The base zoning district will be C-2. The applicant proposes to change the base zoning from TR-1 (current) to PDD (Planned Development District). All C-2 standards shall apply except where modified herein. The planned development standards shall supersede any conflicting provisions of the City of Lago Vista Unified Development Code. The use and development of the Property shall comply with the zoning requirements and development standards of the City of Lago Vista, except as specifically described below (see additional detail in Exhibit B-6).

   A. Resort Hotel, Restaurant, and Spa Complex. This single structure or series of attached structures is to serve as a resort lodging facility, with support and ancillary amenities to accommodate short-term visitors to the area. A maximum of 78 guest rooms shall be allowed, each with a minimum area of 400 square feet. Anticipated amenities and support functions shall include, but not be limited to restaurants, hotel-related retail services, a full-service spa including a hair and nail salon, fitness facilities, and staff offices. The maximum enclosed area, exclusive of any covered parking facilities, shall be 73,116 square feet. This facility shall comply with the development standards of the C-2 zoning district except as otherwise described herein.

   B. Casitas. A maximum of SIX separate structures with a minimum of 800 square feet that will provide short-term lodging. Each structure will include two rental units, with each rental unit including between one and two bedrooms. These facilities shall comply with the development standards of the R-4 zoning district except as otherwise described herein. These units will be managed by the hotel and will not be a condo regime or Short Term Rental model.

   C. Conference Center. A single structure that is intended to provide conference and meeting space for use by hotel guests and local participants

2. Development Standards.

   A. Streets.

      i. All streets and driveways on the Property are private and shall be maintained by the property owner. There are no public streets on the Property.

      ii. The subject property is situated near the northwest corner of Boggy Ford Road, and Lohman Ford Road, which are public roadways. This project proposes connecting only to Boggy Ford Road which will be our primary frontage.

      iii. All fire lanes shall be a minimum of 24 feet wide and constructed in accordance with the City of Lago Vista design standards and specifications and requirements of the applicable Travis County Emergency Services District.

iv. Boggy Ford Road is the only current access point for the site and shall serve as the primary street access. Secondary access to Lohman Ford Road shall be provided if public access becomes available through adjacent property, future development, public right-of-way dedication, public access easement, or other lawful public access mechanism.

B. Sidewalks. A Public Access Easement will be provided along front of the property and sidewalks will be constructed at the cost of the owner during site development. Sidewalks are not required anywhere on the property except as otherwise required by the Americans with Disabilities Act. Sidewalks shall be provided internally throughout the Property at the discretion of the owner.

C. Parking. Required off-street parking shall comply with the Lago Vista Zoning Ordinance except as described below:

i. Parking may be located between buildings and Boggy Ford Road.

ii. Parking may be located between the building(s) and the roads where necessary due to design, grading, tree preservation, or site constraints.

iii. No parking shall be allowed along Boggy Ford Road.

iv. Parking ratios shall conform to the following

LAGO VISTA RESORT HOTEL USE/PARKING TABLE					
Use	Quantity	Unit	Use Parking Ratio	Parking Required	Parking Provided
Hotel/Motel	78	Rooms	1 PER ROOM	78	90
Event Space (Main)	6,000	sq. ft.	1 PER 500 SF	12	20
Event Space (Aux)	7,929	sq. ft.	1 PER 500 SF	16	17
Restaurant (Lobby Includes Bar)	4,000	sq. ft.	1 PER 250 SF	16	23
Casita	12	Rooms	1 PER ROOM	12	25
			Total Required	134	175

D. Setbacks and Buffers.

i Minimum setbacks shall follow C-2 standards

ii Grading, paving/parking, utilities, drainage facilities, stormwater facilities, and retaining walls shall be permitted within setback areas.

E. Signage. All signage shall be in accordance with the applicable requirements (including lighting) of the City of Lago Vista, except as described in the Signage Plan and standards included in Exhibit "C" attached hereto.

F. Maximum Building Heights.

i. Resort Hotel and Spa Complex: The maximum height of the structure shall be forty-two (42) feet above grade. The building shall have its base at 993 AMSL and shall not exceed an overall elevation of 1035 AMSL.

ii. All Other Structures: No other structure shall exceed two (2) stories in height from the level of the fire lane or emergency access drive at the front of or adjacent to the building. The maximum height of each

structure shall be thirty-two (32) feet above grade, measured from the lowest adjacent paving elevation of the front or nearest adjacent driveway. No height variance is needed or being requested for all the other structures.

G. Tree Preservation. Section 20, "Tree Preservation and Landscaping Requirements" in Part IV "Administration and Enforcement" of the Lago Vista "Zoning Ordinance" is acknowledged to dictate the requirements concerning the removal of protected trees from the subject property. Full compliance with the cited section will control the development of the property. Replacement trees on the Property shall be located in accordance with an approved landscape plan. Encroachment into up to 25% of the critical root zone of trees shall be permitted, provided: (1) a certified arborist report is submitted (where needed); (2) tree protection measures are implemented; (3) monitoring occurs before, during, and after construction. Preserved tree clusters may count towards mitigation requirements.

H. Impervious Cover. The subject property, contrary to previous submittals, does NOT lie in the Austin ETJ release area as defined by the Interlocal Agreement between the City of Austin and the City of Lago Vista (see Exhibit B-7). The development will adhere to current Lago Vista C-2's impervious cover standards.

I. Landscaping. Landscaping within the Laverne Estates Planned Development District shall comply with the modified standards herein which supersede conflicting provisions of the Unified Development Code.

a Credit for Existing Vegetation: Preserved wooded areas may count toward required landscape area, buffer area, and open space requirements; Preserved tree clusters may substitute for required parking lot trees and perimeter trees; Existing understory vegetation may count toward buffer requirements without supplemental planting unless deemed necessary for screening of mechanical or service areas.

b Parking Lot Interior Landscaping: Interior landscaping shall require no more than one (1) landscape island per ten (10) parking spaces; Existing trees located within parking areas may count toward required islands; Interior landscape islands may be reduced or relocated where necessary to preserve existing trees or accommodate grading constraints.

c Street and Perimeter Landscaping: Street frontage planting may consist of preserved natural vegetation.; Where preserved vegetation exists along property boundaries, additional buffer planting shall not be required; Landscape buffers may be reduced

where topography or existing wooded areas provide effective screening.

d Irrigation: Irrigation shall not be required for preserved natural areas; Drip irrigation or temporary establishment irrigation shall be permitted in lieu of permanent spray systems; Native and drought-tolerant plant species are encouraged but not required. All irrigation shall be installed utilizing purple non-potable system piping. If and when Type I reuse water is made available to serve the property at or adjacent to the property frontage, irrigation shall utilize such Type I reuse water rather than potable water.

e Planting Size Requirements: Replacement trees may be planted at a minimum two-inch (2") caliper; Shrubs may be planted at five-gallon size; Groundcover may substitute for shrubs where appropriate.

f Parking-Lot Headlight Screening: Dense evergreen screening shall be installed and maintained around the perimeter of the parking lot to reduce vehicle headlight visibility from adjacent properties and public rights-of-way. The screening shall be composed of evergreen shrubs or comparable evergreen plantings, spaced to create a continuous visual buffer, with foliage extending to or near ground level and maintained at a height sufficient to substantially block or diffuse headlight glare.

g Alternative Compliance: The Development Services Director may approve alternative landscape configurations that preserve existing natural features and reduce grading, provided the overall intent of buffering and visual screening is maintained.

J. Exterior Lighting. All exterior lighting shall comply with Lago Vista's Dark Skies ordinance and any applicable City lighting requirements.

K. Building Orientation and Street Visibility. Buildings shall provide an architectural façade toward adjacent public rights-of-way; however, buildings shall not be required to: Provide a primary pedestrian entrance directly from a public street, Provide retail storefront elements, or Meet any minimum glazing percentage. All loading and unloading areas shall be screened from view from Boggy Ford Rd.

L. Fenestration and Transparency. No minimum glazing percentage or window-to-wall ratio shall apply. Window placement and quantity shall be determined by: Interior functionality, Energy efficiency, Solar orientation, Cost efficiency. Blank wall areas are permitted and may be treated with: Material variation, Architectural banding, Reveals, Landscaping.

M. Building Articulation. Buildings should incorporate architectural variation

sufficiently to avoid large uninterrupted monotone surfaces. Variation may be achieved through: Material changes, Color changes, Entry features, Canopies or awnings, Architectural reveals, Vertical or horizontal banding, No minimum depth, frequency, or height change shall be required.

N. Building Frontage and Height. No minimum building frontage requirement shall apply. Buildings may be located anywhere within the buildable area, subject only to the agreed setbacks. Buildings shall have a max height of 42'.

O. Grading and Retaining Walls. Retaining walls up to 20 feet in height shall be permitted administratively. Tiered retaining wall systems shall be permitted. Grading within setback areas shall be permitted. These items will be assessed after design and permit has been approved and minimal impact to neighbors can be proven if any of the above is situated in the setbacks.

P. Cross-Access. No cross-access design or planning shall be required for this site. Public sidewalk easements may serve concurrently as Common Access Easements. If development occurs north of this property, cross access may be allowed.

Q. Drainage and Stormwater. Detention and water quality facilities may be located within setbacks. Underground detention and water quality is permitted. Cut from areas in the development will be redeployed to the northernmost part of the property to raise it and guide stormwater to the detention pond located at the southern end of the property (see Exhibit B-4). Pool discharge will be directed to facilities to be built by the developer and not discharged into the City of Lago Vista Sewer System in accordance with all TCEQ and LCRA regulations.

R. Other Applicable Regulations. Design and construction shall comply with all applicable regulations of other agencies or jurisdictions, including but not limited to the American with Disabilities Act, the Texas Accessibility Standards, TCEQ and LCRA.

3. Traffic Mitigation. The Developer completed a Traffic Impact Analysis in accordance with city requirements (see "Exhibit E"), coordinated with the city engineer, and will fully mitigate its proportional impact on the roadway system. A Deceleration Lane is required as part of the mitigation efforts from the traffic impact analysis; this additional lane will be dedicated by way of plat with additional right of way in order to accommodate an additional lane on Boggy Ford in addition to the deceleration lane. Payments for the development's proportional impacts will be made to the city who will be responsible for coordinating payments from other developers and then making subsequent offsite improvements to the impacted roadway elements. Payments made by developer are subject to any credits against roadway impact fees as permitted by law.

4. Agreement. The appropriate departments of the City, the Planning & Zoning Commission and the City Council hereby find and agree that this Ordinance and the

project contemplated herein complies with and satisfies the requirements of Section 6.105, Section 10.20, and Section 13.20 of the Zoning Ordinance as well as the Comprehensive Master Plan of the City of Lago Vista. The City Council finds that this Ordinance serves as both a concept plan and a detail plan approval and that no additional detail plans are required by the Zoning Ordinance and thus the requirements of Section 10.20(e) have been met.

5. Land Use Plan. The depiction of the "Laverne Estates Planned Development District" in Exhibit "B" is not intended to reflect the level of detail and finality associated with construction permit documents. Non-substantive changes which do not alter the basic relationship of the proposed development to adjacent property, which do not alter the uses permitted, increase the density, height, or impervious surface coverage of the site, which do not decrease the off-street parking ratio or reduce the required setbacks within the boundary of the site and which do not decrease any buffers shown on the approved detail plan shall be administratively authorized in writing by the Development Services Director. Conversely, substantive changes in the detail plan shall be considered in accordance with the requirements of Section 10 of the Zoning Ordinance.

Section 7. Repealer. The Zoning Ordinance and all other applicable portions of the Lago Vista Code of Ordinances are amended as required to incorporate the "Laverne Estates Planned Development District" as described herein. Any portion of the Zoning Ordinance, Comprehensive Master Pan or any applicable ordinance in conflict with this Ordinance is hereby repealed or amended to the extent of such conflict only.

Section 8. Severability. Should any section or part of this Ordinance be held unconstitutional, illegal, or invalid, or the application to any person or circumstance for any reasons thereof ineffective or inapplicable, such unconstitutionality, illegality, invalidity, or ineffectiveness of such section or part shall in no way affect, impair or invalidate the remaining portion or portions thereof; but as to such remaining portion or portions, the same shall be and remain in full force and effect and to this end the provisions of this Ordinance are declared to be severable.

Section 9. Effective Date. This Ordinance shall be in force and effect from and after its passage on the date shown below in accordance with the provisions of the Texas Local Government Code and the City's Charter.

Section 10. Change of Zoning Map. The City Manager is hereby authorized to and shall promptly note the zoning change on the official Zoning Map of the City of Lago Vista, Texas.

Section 11. Proper Notice and Meeting. It is hereby officially found and determined that the meeting at which this Ordinance is passed was open to the public as required and that public notice of the time, place, and purpose of said meeting was given as required by the Open Meetings Act, Chapter 551, Texas Local Government Code.

AND IT IS SO ORDERED.

PASSED AND APPROVED this 21st day of May 2026.

Attest:

_____	_____
Robin Smith, City Secretary	Shane Saum, Mayor

On a motion by Councilman Benefield, seconded by Councilman Prince, the above and foregoing ordinance was passed and approved.

EXHIBIT "A"
Legal Description and Survey

A-1 Legal Description

A-2 Final Plat – Unsigned

A-3 Existing Conditions Plan

EXHIBIT "A"
Legal Description and Survey

Exhibit "A"

METES AND BOUNDS

Being 7.056 acres, more or less, out of the G.M. Campbell Survey, Abstract No. 189, & D.W. Railroad Co. Survey, Abstract No. 2605, same being the property described in a Warranty Deed recorded in Volume 13380, Page 2223, Real Property Records, Travis County, Texas, same being the property described more particularly described by metes and bounds as follows:

BEGINNING at a 1/2 inch iron rod found for the South corner of this 7.056 acres, same being the West corner of Stanley D. & Sandra L. Miller 5.419 acres (Document Number 2004130875), same being on the northeast line of a 60 foot wide Right-of-Way called Boggy Ford Road, same also being the **POINT OF BEGINNING;**

THENCE along the line common with this 7.056 acres and said northeast Right-of-Way line of Boggy Ford Road the following courses and distances:

Along a curve to the left, with a radius of 351.08 feet, an arc length of 84.24 feet (called 84.25 feet), with a chord bearing North 58 degrees 40 minutes 58 seconds West, a chord length of 84.03 feet, and a delta angle of 13 degrees 44 minutes 50 seconds to a point for an interior corner;

North 65 degrees 23 minutes 19 seconds West (called 65 degrees 07 minutes 55 seconds West), a distance of 316.65 feet to a 1/2 inch iron rod found for the West corner of this 7.056 acres, same being the southeast corner of Machart Trust 7.931 acres (Document Number 2010111400);

THENCE along the line common with this 7.056 acres and said Machart 7.931 acres, North 28 degrees 17 minutes 44 seconds East (called North 28 degrees 33 minutes 41 seconds East), a distance of 871.19 feet (called 871.24 feet) to a 1/2 inch iron rod found for the North corner of this 7.056 acres, same being the southwest line of Stone Fountain Partners LLC. 10.26 acres (Document Number 2015075252);

THENCE along the line common with this 7.056 acres and said Fountain 10.26 acres, South 37 degrees 21 minutes 51 seconds East (called South 37 degrees 04 minutes 30 seconds East), at a distance of 381.92 feet pass a 1/2 inch iron rod found out 0.1 feet, and continuing for a total distance of 438.95 feet (called 438.99 feet) to a Cotton Spindle found in a tree for the East corner of this 7.056 acres, same being the West corner of Gary Jon & Judy A. Marchman 6.754 acres, same also being the said North corner of said Miller 5.419 acres;

THENCE along the line common with this 7.056 acres and said Miller 5.419 acres South 28 degrees 17 minutes 51 seconds West (called South 28 degrees 33 minutes 34 seconds West), a distance of 674.36 feet (called 674.30 feet) to the **POINT OF BEGINNING,** and containing 7.056 acres of land, more or less.

I hereby certify that these field notes were prepared from an actual survey made on the ground under my supervision and are true and correct to the best of my knowledge and belief. A survey plat of the above described tract prepared this day is hereby attached to and made a part hereof. Bearings shown herein are based on actual GPS observations, Texas State Plane Coordinates, Central Zone, Grid.

David L. Elzy
Registered Professional Land Surveyor
Texas Registration No. 4675
April 12th, 2021

STATE OF TEXAS §
COUNTY OF TRAVIS §

KNOW ALL MEN BY THESE PRESENTS THAT LAVERNE ESTATES, LP, BEING THE OWNER OF THAT CERTAIN 7.0575 ACRE (307,426 SQUARE FEET) TRACT OF LAND OUT OF THE GILES M. CAMPBELL (ALSO KNOWN AS MARY F. CAMPBELL) SURVEY NO. 98, ABSTRACT NO. 189, AND THE DALLAS AND WICHITA RAILROAD COMPANY (ALSO CALLED THE W.A. COOK) SURVEY NO. 100, ABSTRACT NO. 2605, SAID 7.0575 ACRES HAVING BEEN CONVEYED TO LAVERNE ESTATES, LP BY GENERAL WARRANTY DEED OF RECORD IN DOCUMENT NO. 2021248514 OF THE OFFICIAL PUBLIC RECORDS OF TRAVIS COUNTY, TEXAS, DO HEREBY SUBDIVIDE SAID 7.0575 ACRES TO BE KNOWN AS:

FINAL PLAT OF VISTA VERDE

IN ACCORDANCE TO THE PLAT SHOWN HEREON, SUBJECT TO ANY AND ALL EASEMENTS OR RESTRICTIONS HEREOTFORE GRANTED, AND DOES HEREBY DEDICATE TO THE PUBLIC STREETS OR EASEMENTS DEDICATED HEREON.

WITNESS MY HAND, THIS THE _____ DAY OF _____, 20___ A.D.

BY: LAVERNE ESTATES, LP

BY: _____
PRINT NAME: SUDHAKAR KARUMURI
AUTHORIZED REPRESENTATIVE

STATE OF TEXAS §
COUNTY OF TRAVIS §

BEFORE ME, THE UNDERSIGNED AUTHORITY, ON THIS DAY PERSONALLY APPEARED SUDHAKAR KARUMURI, AUTHORIZED REPRESENTATIVE FOR LAVERNE ESTATES, LP, KNOWN TO ME TO BE THE PERSON WHOSE NAME IS SUBSCRIBED TO THE FOREGOING INSTRUMENT OF WRITING, AND SHE ACKNOWLEDGED TO ME THAT SHE EXECUTED THE SAME FOR THE PURPOSES AND CONSIDERATIONS THEREIN EXPRESSED AND IN THE CAPACITY THEREIN STATED.

WITNESS MY HAND AND SEAL OF OFFICE, THIS THE _____ DAY OF _____, 20___ A.D.

_____
NOTARY PUBLIC FOR TRAVIS, COUNTY, TEXAS

WITNESS MY HAND, THIS THE _____ DAY OF _____, 20___ A.D.

CITY OF LAGO VISTA APPROVAL

THIS PLAT HAS BEEN SUBMITTED TO AND CONSIDERED BY THE PLANNING AND ZONING COMMISSION OF THE CITY OF LAGO VISTA, TEXAS AND IS HEREBY RECOMMENDED FOR APPROVAL BY THE CITY COUNCIL.

_____ _____
CHAIR, PLANNING AND ZONING COMMISSION DATE:

APPROVED AND AUTHORIZED FOR RECORD BY THE CITY COUNCIL OF THE CITY OF LAGO VISTA.

_____ _____
KEVIN SULLIVAN, MAYOR OF LAGO VISTA, TEXAS DATE:

ATTEST:

_____ _____
CITY SECRETARY, CITY OF LAGO VISTA, TEXAS DATE:

STATE OF TEXAS §
COUNTY OF TRAVIS §

I, DYANA LIMON-MERCADO, CLERK OF TRAVIS COUNTY, TEXAS, DO HEREBY CERTIFY THAT THE FOREGOING INSTRUMENT OF WRITING AND ITS CERTIFICATE OF AUTHENTICATION WAS FILED FOR RECORD IN MY OFFICE ON THE _____DAY OF _____, 20___ A.D.,

AT _____ O'CLOCK ___M., AND DULY RECORDED ON THE _____ DAY OF

_____, 20___ A.D., AT _____ O'CLOCK ____ M., OF SAID

COUNTY AND STATE IN DOCUMENT NO. _____ OF THE

OFFICIAL PUBLIC RECORDS OF TRAVIS COUNTY, TEXAS.

WITNESS MY HAND AND SEAL OF THE OFFICE OF THE COUNTY CLERK,

THIS THE _____ DAY OF _____, 20___ A.D.

_____
DEPUTY, COUNTY CLERK
TRAVIS COUNTY, TEXAS

SURVEYOR'S CERTIFICATION:

I, FERNANDO PEREZ, AM AUTHORIZED UNDER THE LAWS OF THE STATE OF TEXAS TO PRACTICE THE PROFESSION OF LAND SURVEYING, AND HEREBY CERTIFY THAT THIS PLAT IS TRUE AND CORRECT TO THE BEST OF MY KNOWLEDGE, THAT IT WAS PREPARED FROM AN ACTUAL ON THE GROUND SURVEY OF THE PROPERTY MADE UNDER MY DIRECTION AND SUPERVISION AND THAT ALL NECESSARY SURVEY MONUMENTS ARE CORRECTLY SET OR FOUND AS SHOWN HEREON.

_____
FERNANDO PEREZ, R.P.L.S. DATE
TEXAS REGISTRATION NO. 7041
fperez@capitalsurveying.com

BEARING BASIS:

ALL BEARINGS ARE BASED ON THE STATE PLANE COORDINATE SYSTEM, NAD83, TEXAS CENTRAL ZONE (4203). ALL DISTANCES WERE ADJUSTED TO SURFACE USING A COMBINED SCALE FACTOR OF 1.000113775403.

GENERAL NOTES:

1. NO STRUCTURES SHALL BE OCCUPIED UNTIL CONNECTED TO THE CITY OF LAGO VISTA APPROVED PUBLIC WATER SYSTEM AND A PUBLIC WASTEWATER SYSTEM.
2. ALL WATER AND WASTEWATER SYSTEMS IMPROVEMENTS MUST BE IN ACCORDANCE WITH THE CITY OF LAGO VISTA "WATER AND WASTEWATER SYSTEM DESIGN CRITERIA AND SPECIFICATIONS". ALL WATER AND WASTEWATER PLANS MUST BE PRESENTED TO THE CITY OF LAGO VISTA WATER AND WASTEWATER UTILITY FOR REVIEW AND APPROVAL. ALL WATER AND WASTEWATER CONSTRUCTION MUST BE INSPECTED BY THE CITY OF LAGO VISTA.
3. PROPERTY OWNER OR HIS/HER ASSIGNS SHALL PROVIDE FOR ACCESS TO DRAINAGE EASEMENTS OR WATER QUALITY EASEMENTS AS MAY BE NECESSARY AND SHALL NOT PROHIBIT ACCESS BY THE CITY OF LAGO VISTA FOR INSPECTION AND MAINTENANCE OF SAID EASEMENTS.
4. NO BUILDINGS, FENCES, LANDSCAPING OR OTHER OBSTRUCTIONS ARE PERMITTED IN DRAINAGE EASEMENTS EXCEPT AS PROVIDED BY THE CITY OF LAGO VISTA.
5. ALL STREETS AND DRAINAGE FACILITIES WILL BE CONSTRUCTED TO THE CITY OF LAGO VISTA STANDARDS.
6. ALL DRAINAGE EASEMENTS ON PRIVATE PROPERTY SHALL BE MAINTAINED BY THE PROPERTY OWNER OR ASSIGNS.
7. EROSION AND SEDIMENTATION CONTROLS ARE REQUIRED FOR ALL CONSTRUCTION ON EACH LOT IN ACCORDANCE WITH CITY OF LAGO VISTA REQUIREMENTS.
8. CONSTRUCTION OF IMPROVEMENTS WITHIN THIS SUBDIVISION SHALL NOT COMMENCE UNTIL ALL APPLICABLE PERMITS AND/OR CONSTRUCTION PLANS HAVE BEEN APPROVED BY THE CITY OF LAGO VISTA, TEXAS. ALL IMPROVEMENTS SHALL CONFORM TO APPLICABLE CITY STANDARDS AND SPECIFICATIONS.
9. BUILDING SETBACKS NOT SHOWN HEREON SHALL CONFORM TO THE CURRENT ZONING ORDINANCE OF THE CITY OF LAGO VISTA, TEXAS.
10. PER THE CURRENT CITY ORDINANCE 24-06-06-01, THIS SUBDIVISION IS WITHIN THE CORPORATE LIMITS OF THE CITY OF LAGO VISTA, TEXAS.
11. THIS SURVEY WAS DONE WITHOUT THE BENEFIT OF A TITLE COMMITMENT AND WOULD BE SUBJECT TO ANY AND ALL EASEMENTS, CONDITIONS OR RESTRICTIONS THAT A CURRENT TITLE COMMITMENT MAY DISCLOSE.

ENGINEER'S CERTIFICATION:

I, WILL PARNELL, AM AUTHORIZED UNDER THE LAWS OF THE STATE OF TEXAS TO PRACTICE THE PROFESSION OF ENGINEERING, AND HEREBY CERTIFY THAT THIS PLAT CONFORMS WITH THE APPLICABLE ORDINANCES OF THE CITY OF LAGO VISTA, TEXAS, AND TRAVIS COUNTY, TEXAS, AND THAT NO PORTION OF THIS SUBDIVISION IS LOCATED WITHIN THE LIMITS OF A 100-YEAR FLOODPLAIN RECOGNIZED BY THE FEDERAL EMERGENCY MANAGEMENT AGENCY (FEMA) PER FLOOD INSURANCE RATE MAP (FIRM) PANEL NUMBER 48453C0215J, DATED JANUARY 22, 2020. THE ENGINEER DOES NOT ASSUME RESPONSIBILITY FOR THE ACCURACY OF SAID FIRM.

_____
WILL PARNELL, P.E. DATE
LICENSED PROFESSIONAL ENGINEER NO. 121598
PARNELL ENGINEERING, INC.
FIRM #19566
500 E. WHITESTONE BLVD., #1419
CEDAR PARK, TEXAS 78613

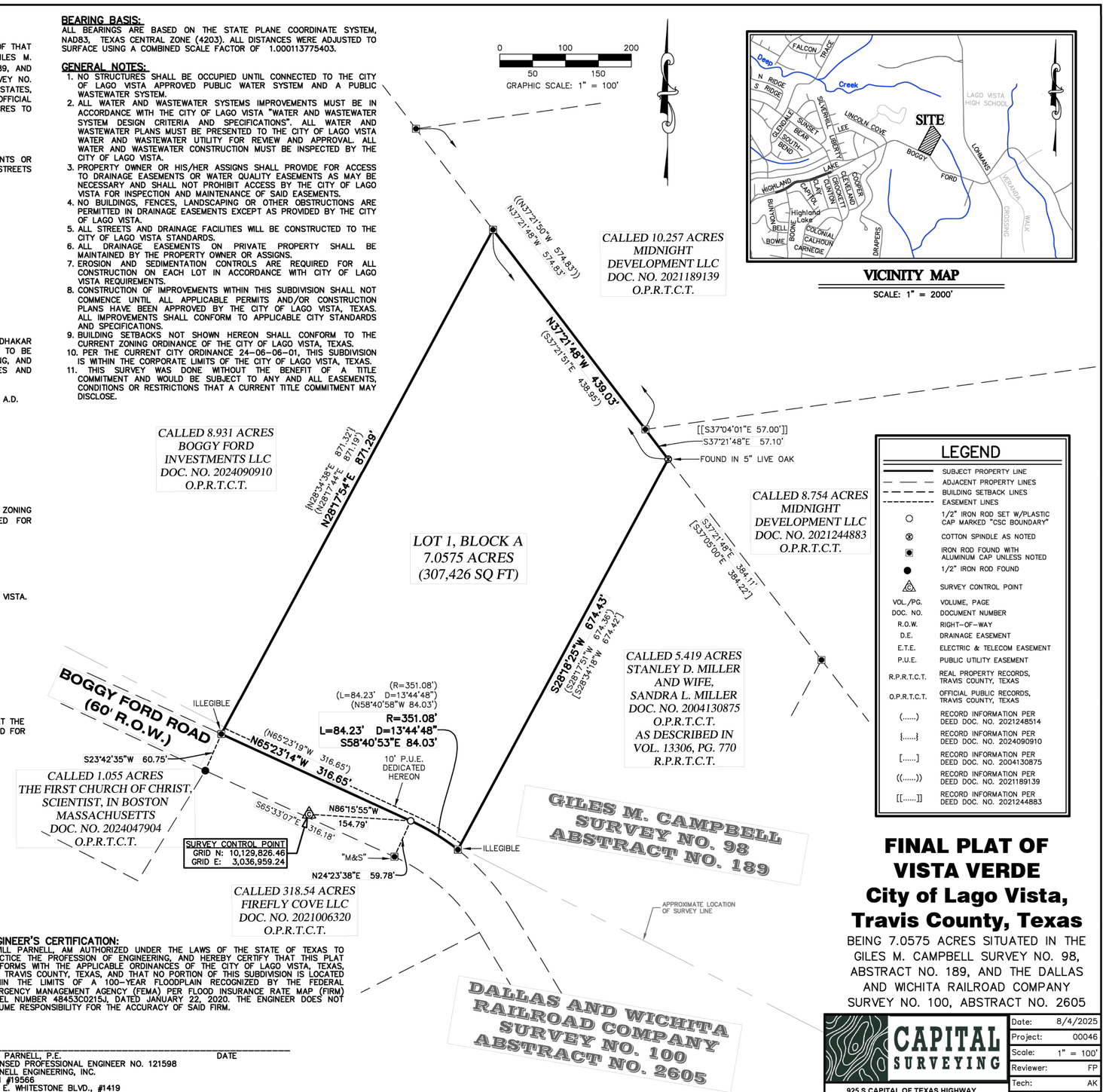

VICINITY MAP
SCALE: 1" = 2000'

LEGEND

	SUBJECT PROPERTY LINE
	ADJACENT PROPERTY LINES
	BUILDING SETBACK LINES
	EASEMENT LINES
○	1/2" IRON ROD SET W/PLASTIC CAP MARKED "CSC BOUNDARY"
⊗	COTTON SPINDLE AS NOTED
◉	IRON ROD FOUND WITH ALUMINUM CAP UNLESS NOTED
●	1/2" IRON ROD FOUND
△	SURVEY CONTROL POINT
VOL./PG.	VOLUME, PAGE
DOC. NO.	DOCUMENT NUMBER
R.O.W.	RIGHT-OF-WAY
D.E.	DRAINAGE EASEMENT
E.T.E.	ELECTRIC & TELECOM EASEMENT
P.U.E.	PUBLIC UTILITY EASEMENT
R.P.R.T.C.T.	REAL PROPERTY RECORDS, TRAVIS COUNTY, TEXAS
O.P.R.T.C.T.	OFFICIAL PUBLIC RECORDS, TRAVIS COUNTY, TEXAS
(.....)	RECORD INFORMATION PER DEED DOC. NO. 2021248514
{.....}	RECORD INFORMATION PER DEED DOC. NO. 2024090910
[.....]	RECORD INFORMATION PER DEED DOC. NO. 2004130875
((.....))	RECORD INFORMATION PER DEED DOC. NO. 2021189139
[[.....]]	RECORD INFORMATION PER DEED DOC. NO. 2021244883

FINAL PLAT OF VISTA VERDE
City of Lago Vista, Travis County, Texas

BEING 7.0575 ACRES SITUATED IN THE GILES M. CAMPBELL SURVEY NO. 98, ABSTRACT NO. 189, AND THE DALLAS AND WICHITA RAILROAD COMPANY SURVEY NO. 100, ABSTRACT NO. 2605

CAPITAL SURVEYING
925 S CAPITAL OF TEXAS HIGHWAY
BLDG. B, SUITE 115, Austin, Texas 78746
info@capitalsurveying.com (512) 327-4006
TBPELS FIRM #1012670

Date:	8/4/2025
Project:	00046
Scale:	1" = 100'
Reviewer:	FP
Tech:	AK
Field Crew:	CC/RC
Sheet:	1 OF 1

P:\00046\Dwg\00046.dwg

BY OTHERS FOR INFORMATION ONLY

parnell engineering
www.parnellengineeringinc.com
500 E. WHITESTONE BLVD (#1419)
CEDAR PARK, TX 78613
512-431-8411
TEXAS REGISTRATION FIRM NO. F-19566

MARK	DATE	DESCRIPTION	BY

LAVERNE DEVELOPERS
VISTA VERDE RESORT HOTEL
19708 BOGGY FORD ROAD, LAGO VISTA, TEXAS 78645
PLAT

Project No:
Designed By:
Drawn By:
Checked By:

A-2

File No:

Copyright: Parnell Engineering

3/25/2026 10:43:34 AM - J:\2511_LAVERNE DEVELOPERS\2511.01 VISTA VERDE RESORT HOTEL\CAD\EXHIBITS\A-2 PLAT.DWG - MIKE RECTOR

Bar Measures 1 inch, otherwise drawing not to scale

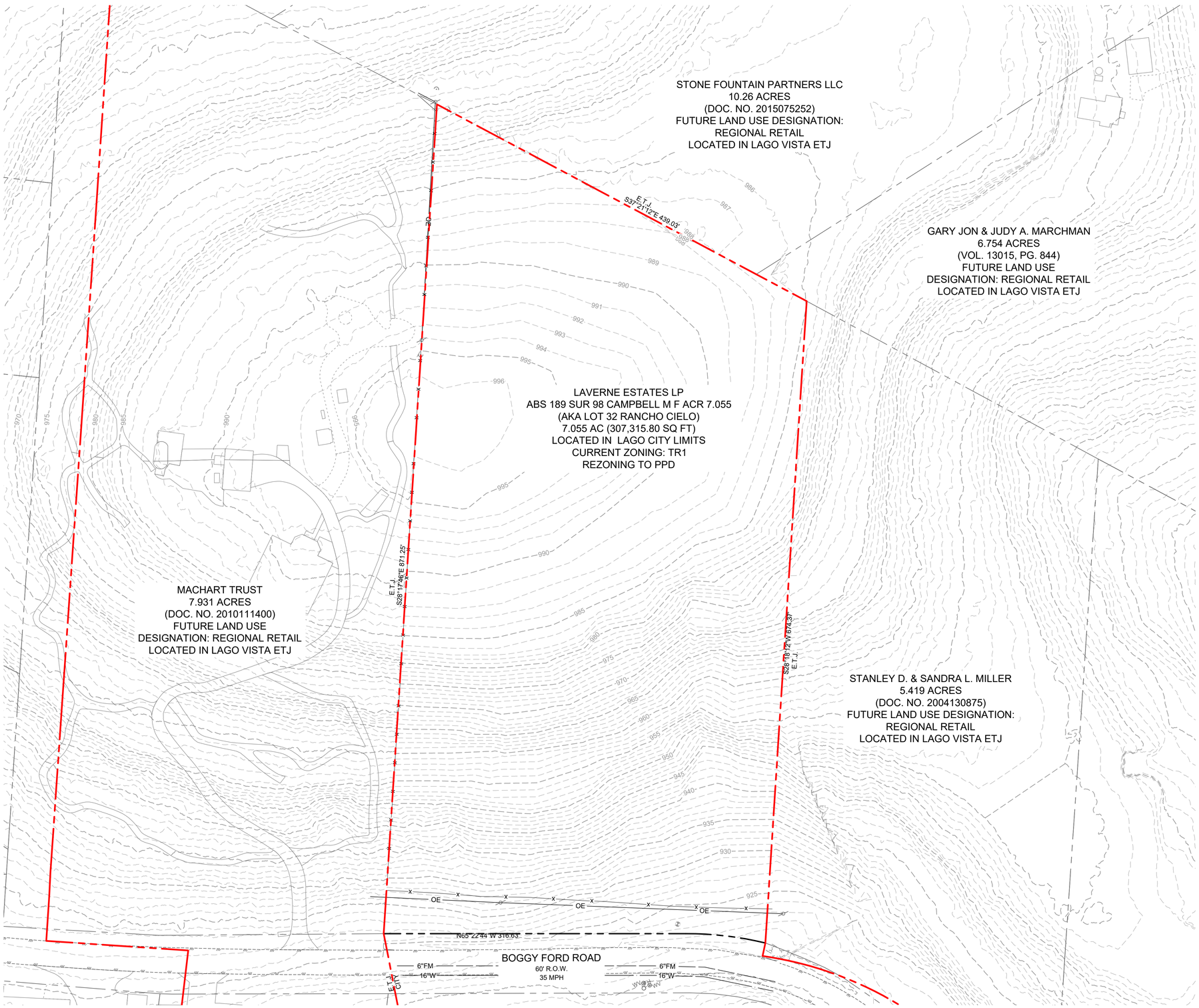

0 25' 50' 100'
SCALE: 1" = 50'

LEGEND

EXISTING

- CITY LIMITS/ETJ
- 735 MAJOR CONTOUR
- 734 MINOR CONTOUR
- PROPERTY BOUNDARY
- ADJOINER LINE
- #FM WASTEWATER FORCE MAIN LINE
- #W WATER LINE
- OE OVERHEAD POWER LINE
- FENCE
- POWER POLE

EXISTING UTILITIES NOTE:

ALL EXISTING UTILITIES ARE LOCATED IN BOGGY FORD ROAD R.O.W.

STATE OF TEXAS
WILLIAM E. PARNELL
121598
LICENSED
PROFESSIONAL ENGINEER
3/25/26

parnell engineering
www.parnellengineeringinc.com
500 E. WHITESTONE BLVD (#1419)
CEDAR PARK, TX 78613
512-431-8411
TEXAS REGISTRATION FIRM NO. F-19566

MARK	DATE	DESCRIPTION	BY

LAVERNE DEVELOPERS
VISTA VERDE RESORT HOTEL
19708 BOGGY FORD ROAD, LAGO VISTA, TEXAS 78645

EXISTING CONDITIONS PLAN

Project No:
Designed By:
Drawn By:
Checked By:

A-3

File No: 2511.01

Copyright: Parnell Engineering

Bar Measures 1 inch, otherwise drawing not to scale

3/25/2026 10:43:55 AM - J:\2511_LAVERNE DEVELOPERS\2511.01 VISTA VERDE RESORT HOTEL\CAD\EXHIBITS\A-2 PLAT.DWG - MIKE RECTOR

EXHIBIT "B"
Land Use Plan

B-1 Land Use Plan

B-2 Landscape Plan

B-3 Existing Drainage Areas

B-4 Proposed Drainage Areas

B-5 Proposed Elevation

B-6 Proposed Concept Drawings

B-7 Additional Concept Drawings

B-8 Austin ETJ Release Area Map

F-1 Vertical Fire Access Elevations

OVERALL SITE DATA TABLE		
	EXISTING	PROPOSED
TOTAL SITE AREA (SQ-FT)	307,315.8	307,315.8
ZONING	TR-1	PDD
PROPOSED USE	UNDEVELOPED	HOTEL
NUMBER OF BUILDINGS	0	8
TOTAL GROSS FLOOR AREA (SQ-FT)	0	69,300
TOTAL BUILDING COVERAGE (SQ-FT)	0	40,300
TOTAL BUILDING COVERAGE (%)	0	13.1
OTHER IMPERVIOUS COVER (SQ-FT)	0	131,365
OTHER IMPERVIOUS COVER (%)	0	42.7
TOTAL IMPERVIOUS COVER (SQ-FT)	0	171,665.0
TOTAL IMPERVIOUS COVER (%)	0	55.9

HOTEL DATA TABLE	
TOTAL GROSS FLOOR AREA (SQ-FT)	73,116
NUMBER OF GUEST ROOMS	78
BUILDING COVERAGE (SQ-FT)	18,279
BUILDING COVERAGE (%)	5.9
BUILDING HEIGHT (STORIES)	4
BUILDING HEIGHT (FEET)	42
FOUNDATION TYPE	SLAB-ON-GRADE
F.F.E. (AMSL) - GROUND FLOOR	993

EVENTS CENTER DATA TABLE	
TOTAL GROSS FLOOR AREA (SQ-FT)	27,842
BUILDING COVERAGE (SQ-FT)	13,921
BUILDING COVERAGE (%)	4.5
BUILDING HEIGHT (STORIES)	2
BUILDING HEIGHT MAX. (FEET)	32
FOUNDATION TYPE	SLAB-ON-GRADE
F.F.E. (AMSL) - GROUND FLOOR	988.9

CASITAS DATA TABLE		
	PER UNIT	TOTAL
NUMBER OF BUILDINGS		6
TOTAL GROSS FLOOR AREA (SQ-FT)	2,700	16,200
NUMBER OF GUEST ROOMS	2	12
BUILDING COVERAGE (SQ-FT)	1,350	8,100
BUILDING COVERAGE (%)	0.4	2.6
BUILDING HEIGHT (STORIES)	2	N/A
BUILDING MAX. HEIGHT (FEET)	30	N/A
FOUNDATION TYPE	SLAB-ON GRADE	N/A
F.F.E. (AMSL) - GROUND FLOOR	983.5 - 979 - 944 943.3 - 938 - 936.5	N/A

0 25' 50' 100'
SCALE: 1" = 50'

LEGEND

EXISTING

- 735 — MAJOR CONTOUR
- 734 — MINOR CONTOUR
- PROPERTY BOUNDARY
- ADJOINER LINE
- #FM — WASTEWATER FORCE MAIN LINE
- #W — WATER LINE
- OE — OVERHEAD POWER LINE
- POWER POLE
- XXX — TREE TO REMAIN AND TREE ID NO.

PROPOSED

- 735 — MAJOR CONTOUR
- 734 — MINOR CONTOUR
- WW — WASTEWATER LINE
- #W — WATER LINE
- BUILDING
- CONCRETE
- PAVED DRIVE AND PARKING
- FH — FIRE HYDRANT

LAGO VISTA RESORT HOTEL USE/PARKING TABLE						
Use	Quantity	Unit	Use Parking Ratio	Parking Required		Parking Provided
Hotel/Motel	78	Rooms	1 PER ROOM	78		90
Event Space (Main)	6,000	sq. ft.	1 PER 500 SF	12		20
Event Space (Aux)	7,929	sq. ft.	1 PER 500 SF	16		17
Restaurant (Lobby Includes Bar)	4,000	sq. ft.	1 PER 250 SF	16		23
Casita	12	Rooms	1 PER ROOM	12		25
			Total Required	134	Total Provided	175

PARKING BY TYPE	
Hotel & Events Center	
STANDARD	133
PARALLEL	5
ADA STANDARD	9
ADA PARALLEL	3
SUBTOTAL:	150
Casitas	
STANDARD	23
ADA STANDARD	2
SUBTOTAL:	25
TOTAL	**175**

STATE OF TEXAS
WILLIAM E. PARNELL
121598
LICENSED
PROFESSIONAL ENGINEER
03/25/26

parnell engineering
www.parnellengineeringinc.com
500 E. WHITESTONE BLVD (#1419)
CEDAR PARK, TX 78613
512-431-8411
TEXAS REGISTRATION FIRM NO. F-19566

MARK	DATE	DESCRIPTION	BY

LAVERNE DEVELOPERS
VISTA VERDE RESORT HOTEL
19708 BOGGY FORD ROAD, LAGO VISTA, TEXAS 78645

LAND USE PLAN

Project No:
Designed By:
Drawn By:
Checked By:

B-1

File No: 2511.01

Copyright: Parnell Engineering

Bar Measures 1 inch, otherwise drawing not to scale

4/14/2026 12:02:06 PM - J:\2511_LAVERNE DEVELOPERS\2511.01 VISTA VERDE RESORT HOTEL\CAD\EXHIBITS\B-1 PROPOSED SITE PLAN.DWG - MIKE RECTOR

0 25' 50' 100'
SCALE: 1" = 50'

LEGEND

EXISTING

- 735 — MAJOR CONTOUR
- 734 — MINOR CONTOUR
- PROPERTY BOUNDARY
- ADJOINER LINE
- #FM — WASTEWATER FORCE MAIN LINE
- #W — WATER LINE
- OE — OVERHEAD POWER LINE
- POWER POLE
- XXX — TREE TO REMAIN AND TREE ID NO.

PROPOSED

- 735 — MAJOR CONTOUR
- 734 — MINOR CONTOUR
- WW — WASTEWATER LINE
- #W — WATER LINE
- BUILDING
- CONCRETE
- PAVED DRIVE AND PARKING
- LANDSCAPED AREAS (PER CITY OF LAGO VISTA LANDSCAPING REQUIREMENTS AND GUIDELINES)
- FH — FIRE HYDRANT
- TREE

STATE OF TEXAS
WILLIAM E. PARNELL
121598
LICENSED
PROFESSIONAL ENGINEER
03/25/26

parnell engineering
www.parnellengineeringinc.com
500 E. WHITESTONE BLVD (#1419)
CEDAR PARK, TX 78613
512-431-8411
TEXAS REGISTRATION FIRM NO. F-19566

MARK	DATE	DESCRIPTION	BY

LAVERNE DEVELOPERS
VISTA VERDE RESORT HOTEL
19708 BOGGY FORD ROAD, LAGO VISTA, TEXAS 78645

LANDSCAPE PLAN

Project No:
Designed By:
Drawn By:
Checked By:

B-2

File No: 2511.01

Copyright: Parnell Engineering

Bar Measures 1 inch, otherwise drawing not to scale

3/25/2026 10:42:05 AM - J:\2511_LAVERNE DEVELOPERS\2511.01 VISTA VERDE RESORT HOTEL\CAD\EXHIBITS\B-2 LANDSCAPE PLAN.DWG - MIKE RECTOR

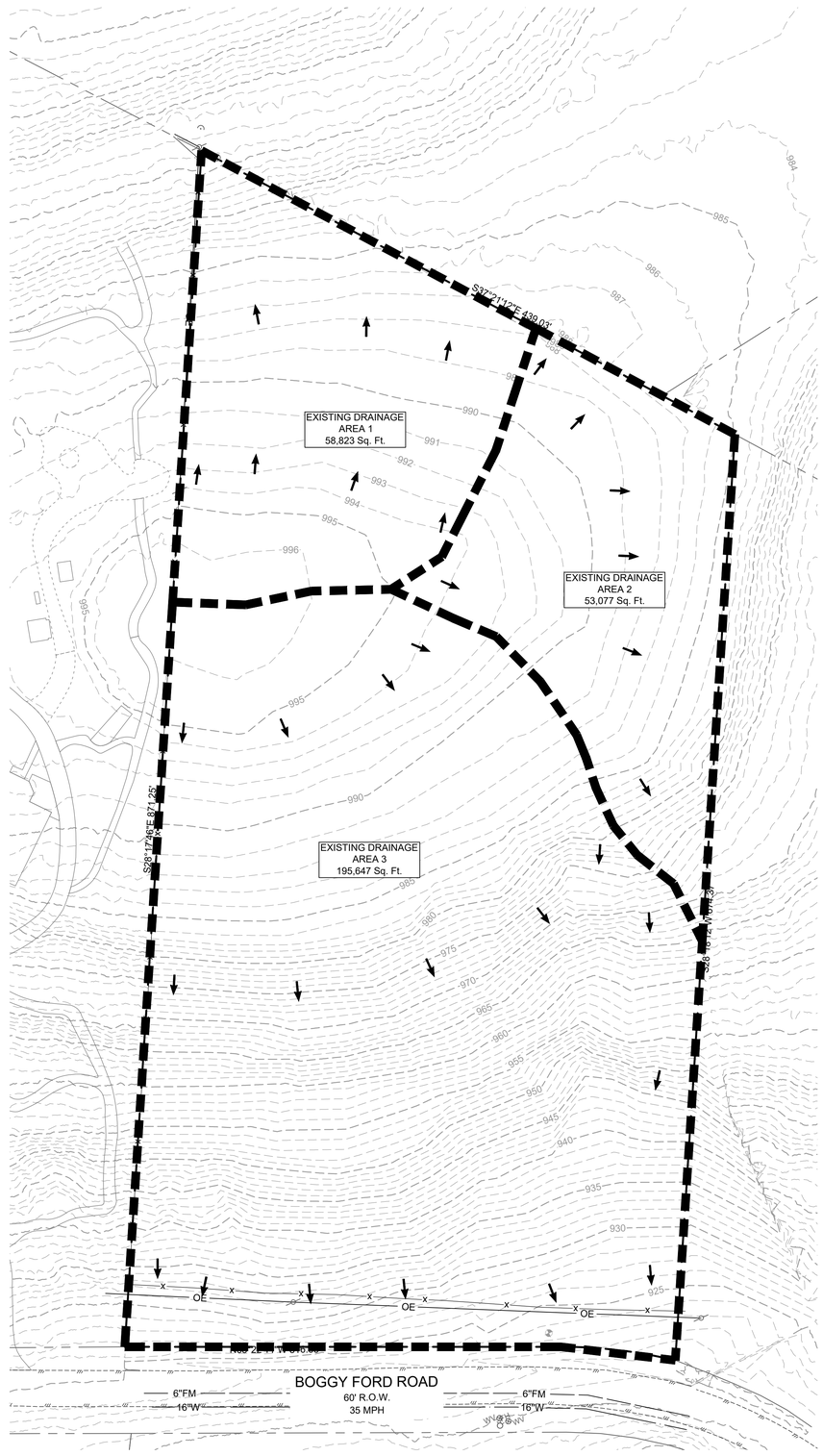

0 25' 50' 100'
SCALE: 1" = 50'

LEGEND

EXISTING

- 735 — MAJOR CONTOUR
- 734 — MINOR CONTOUR
- PROPERTY BOUNDARY
- ADJOINER LINE
- #FM — WASTEWATER FORCE MAIN LINE
- #W — WATER LINE
- OE — OVERHEAD POWER LINE
- x — FENCE
- POWER POLE

STATE OF TEXAS
WILLIAM E. PARNELL
121598
LICENSED
PROFESSIONAL ENGINEER
03/25/26

parnell engineering
www.parnellengineeringinc.com
500 E. WHITESTONE BLVD (#1419)
CEDAR PARK, TX 78613
512-431-8411
TEXAS REGISTRATION FIRM NO. F-19566

MARK	DATE	DESCRIPTION	BY

LAVERNE DEVELOPERS
VISTA VERDE RESORT HOTEL
19708 BOGGY FORD ROAD, LAGO VISTA, TEXAS 78645
EXISTING DRAINAGE AREAS

Project No:
Designed By:
Drawn By:
Checked By:

B-3

File No: 2511.01

Copyright: Parnell Engineering

Bar Measures 1 inch, otherwise drawing not to scale

3/25/2026 10:41:35 AM - JJ:2511_LAVERNE DEVELOPERS\2511.01 VISTA VERDE RESORT HOTEL\CAD\EXHIBITS\B-3 EXISTING DRAINAGE AREAS.DWG - MIKE RECTOR

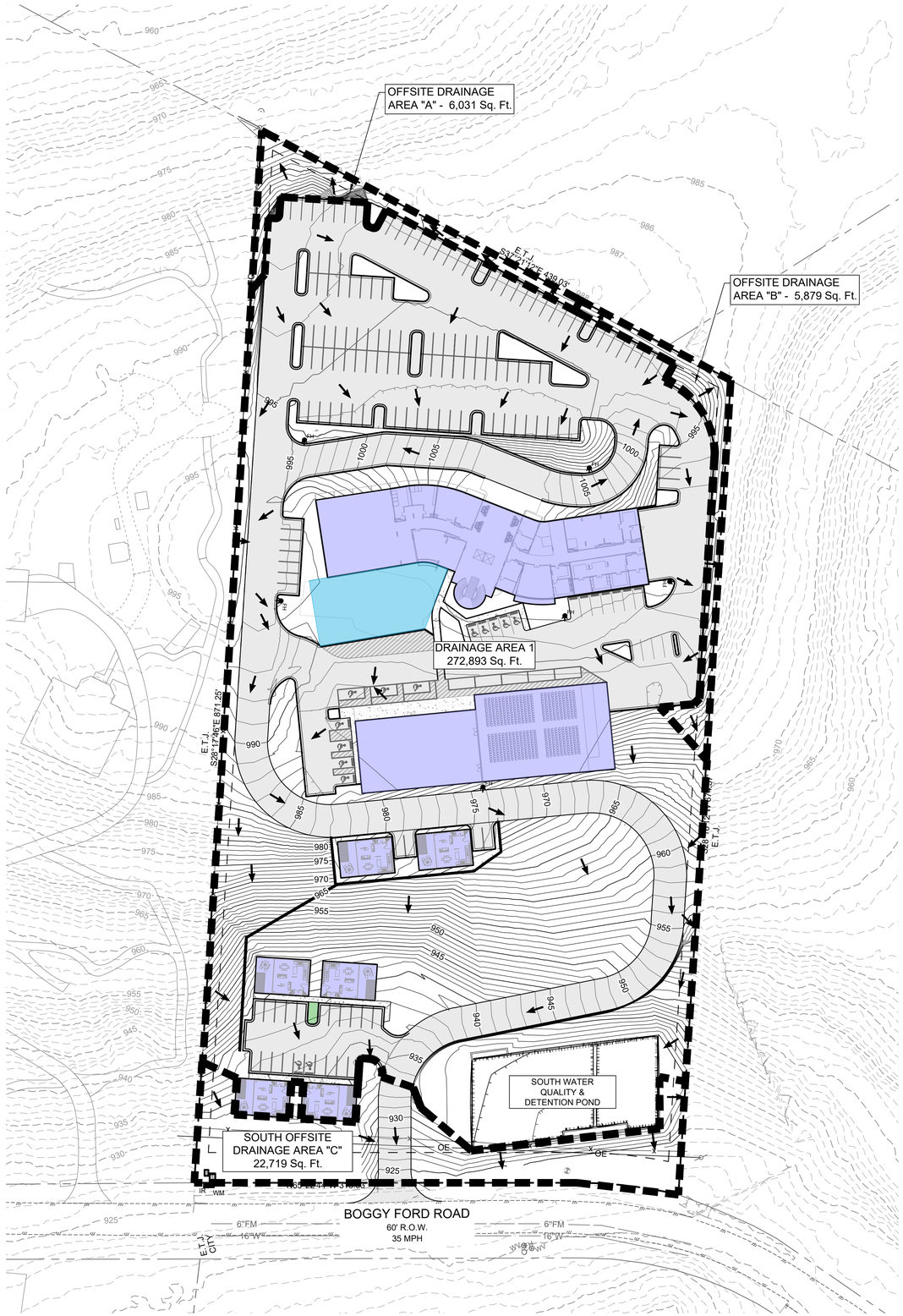

0 25' 50' 100'
SCALE: 1" = 50'

LEGEND

EXISTING

- 735 — MAJOR CONTOUR
- 734 — MINOR CONTOUR
- PROPERTY BOUNDARY
- ADJOINER LINE
- #FM — WASTEWATER FORCE MAIN LINE
- #W — WATER LINE
- OE — OVERHEAD POWER LINE
- POWER POLE
- XXX — TREE TO BE REMOVED AND TREE ID NO.
- XXX — TREE TO REMAIN AND TREE ID NO.

PROPOSED

- 735 — MAJOR CONTOUR
- 734 — MINOR CONTOUR
- BUILDING
- CONCRETE
- PAVED DRIVE AND PARKING
- FH — FIRE HYDRANT

STATE OF TEXAS
WILLIAM E. PARNELL
121598
LICENSED
PROFESSIONAL ENGINEER
03/25/26

parnell engineering
www.parnellengineeringinc.com
500 E. WHITESTONE BLVD (#1419)
CEDAR PARK, TX 78613
512-431-8411
TEXAS REGISTRATION FIRM NO. F-19566

MARK	DATE	DESCRIPTION	BY

LAVERNE DEVELOPERS
VISTA VERDE RESORT HOTEL
19708 BOGGY FORD ROAD, LAGO VISTA, TEXAS 78645

PROPOSED DRAINAGE AREA PLAN

Project No:
Designed By:
Drawn By:
Checked By:

B-4

File No: 2511.01

Copyright: Parnell Engineering

Bar Measures 1 inch, otherwise drawing not to scale

4/14/2026 9:18:19 AM - J:\2511_LAVERNE DEVELOPERS\2511.01 VISTA VERDE RESORT HOTEL\CAD\EXHIBITS\B-4 PROPOSED DRAINAGE AREA PLAN.DWG - MIKE RECTOR

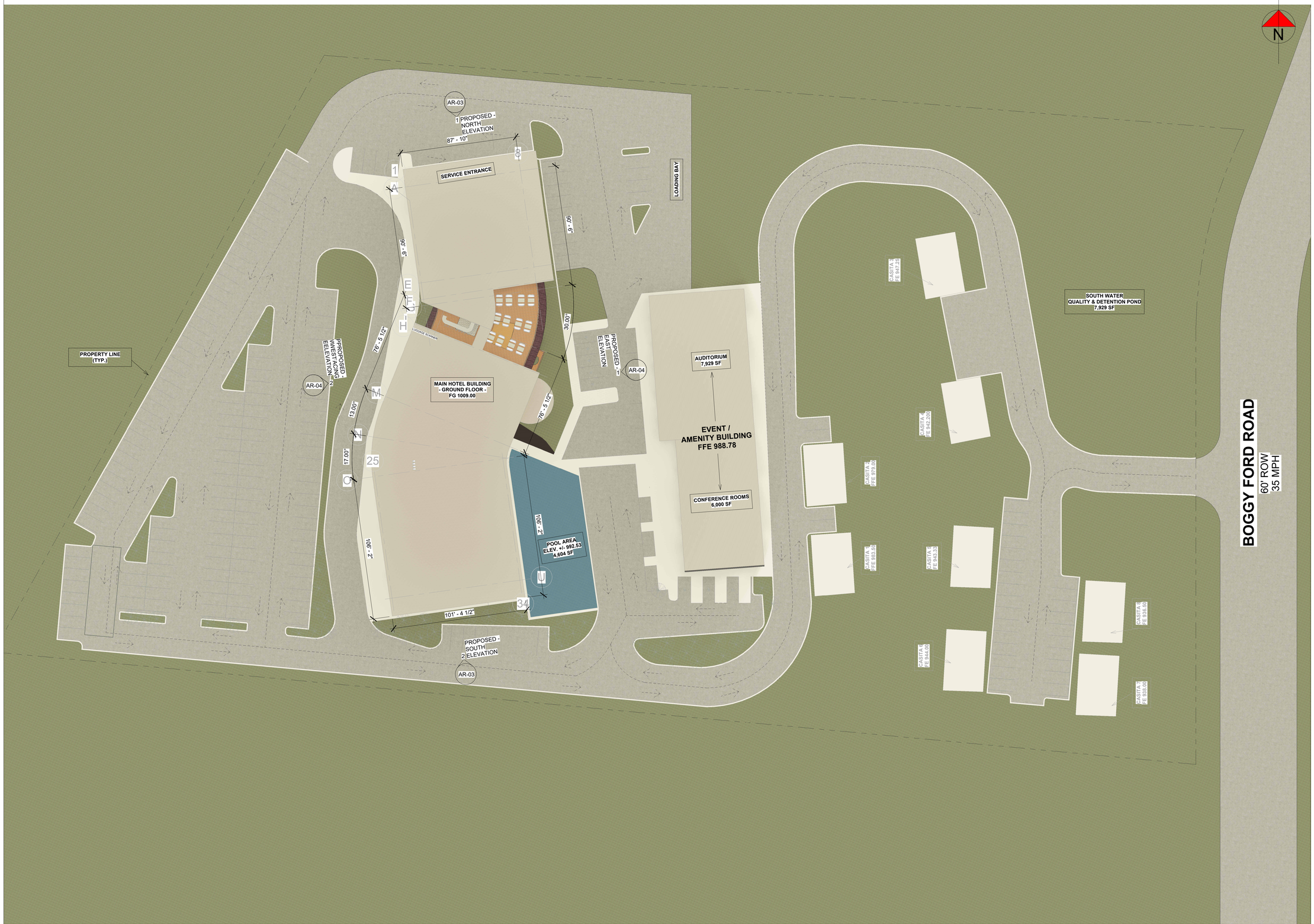

NOTES:

1. HEIGHT COMPLIANT WITH CITY LIMITS
2. CONCEPT ONLY - NOT FOR CONSTRUCTION
3. LAYOUT SUBJECT TO FURTHER DEVELOPMENT
4. PARKING SHOWN FOR PLANNING ONLY

EXHIBIT B-5

OWNER SIGNATURE

63

REVISION STATUS

REV.	DATE	DESCRIPTION	DRAWN BY

CLIENT/CONSULTANT APPROVAL STATUS

APPROVED	**(A)**
APPROVED WITH NOTES	**(B)**
RESUBMIT	**(C)**
DISAPPROVED	**(D)**

OWNER:

ADDRESS:

DESIGN CONSULTANT:

TSABA CORP
NADIF BRACEY
254 CHAPMAN RD, STE 208 #13130
NEWARK, DELAWARE 19702
EMAIL: NADIF@TS9DESIGNS.COM

DRAWING STATUS:

30% SCHEMATIC DESIGN

DISCIPLINE:

PROJECT TITLE:

HOTEL BOGGY FORD

DRAWING TITLE:

PROPOSED SITE PLAN

DRAWN BY:	CHECKED BY:	DATE:
A.C	N.B	
JOB NO:	SHT NO.:	SCALE:
	AR-01	1/32" = 1'-0"

PRELIMINARY - NOT FOR CONSTRUCTION

1 PROPOSED FLOOR PLAN - GROUND FLOOR Copy 1
1/16" = 1'-0"

PRELIMINARY - NOT FOR CONSTRUCTION

NOTES:

1. HEIGHT COMPLIANT WITH CITY LIMITS
2. CONCEPT ONLY - NOT FOR CONSTRUCTION
3. LAYOUT SUBJECT TO FURTHER DEVELOPMENT
4. PARKING SHOWN FOR PLANNING ONLY

OWNER SIGNATURE

64

REVISION STATUS

REV.	DATE	DESCRIPTION	DRAWN BY

CLIENT/CONSULTANT APPROVAL STATUS

APPROVED	**(A)**
APPROVED WITH NOTES	**(B)**
RESUBMIT	**(C)**
DISAPPROVED	**(D)**

OWNER:

ADDRESS:

DESIGN CONSULTANT:

TSABA CORP
NADIF BRACEY
254 CHAPMAN RD, STE 208 #13130
NEWARK, DELAWARE 19702
EMAIL: NADIF@TS9DESIGNS.COM

DRAWING STATUS:
30% SCHEMATIC DESIGN

DISCIPLINE:

PROJECT TITLE:
HOTEL BOGGY FORD

DRAWING TITLE:
PROPOSED GROUND FLOOR PLAN

DRAWN BY:	CHECKED BY:	DATE:
A.C	N.B	
JOB NO:	SHT NO.:	SCALE:
	AR-02	1/16" = 1'-0"

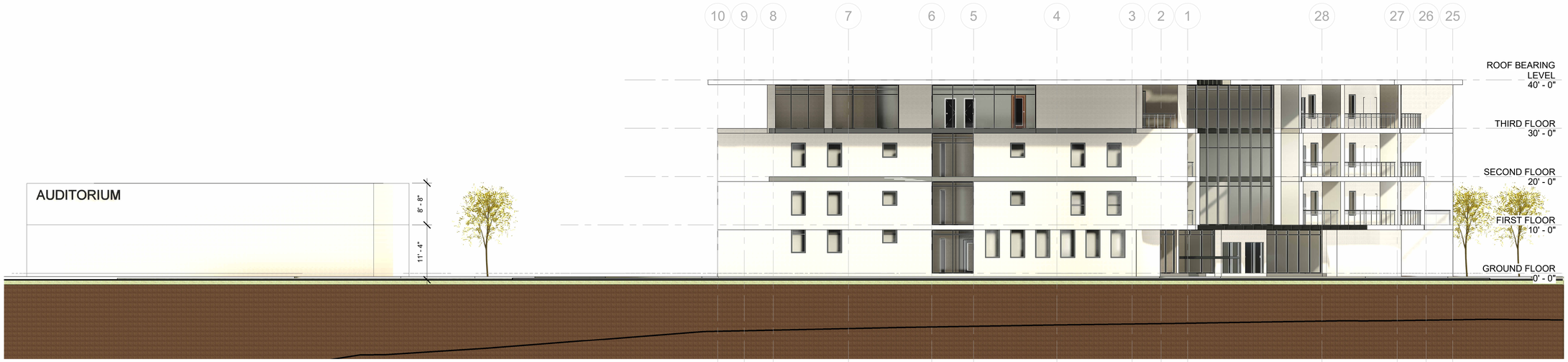

1 PROPOSED - NORTH ELEVATION
3/32" = 1'-0"

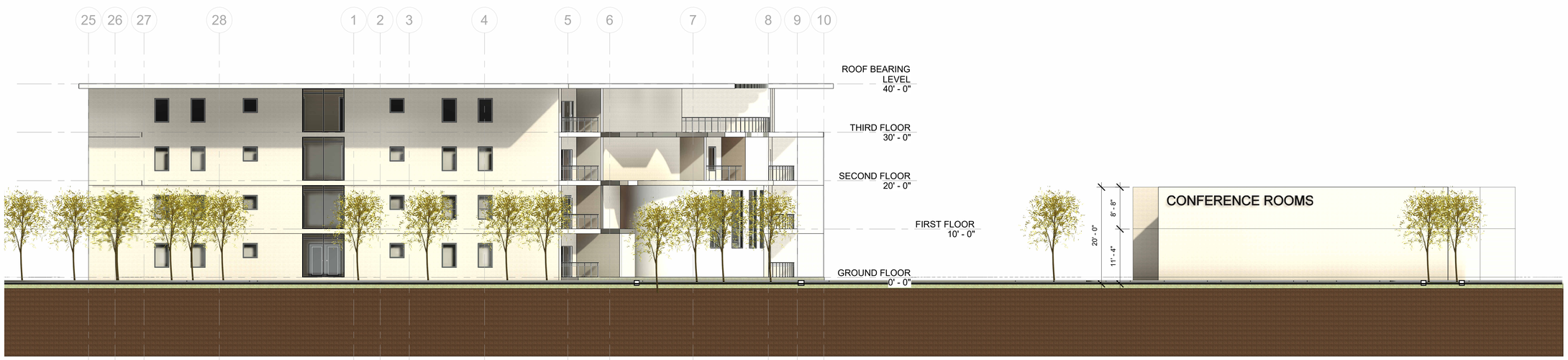

2 PROPOSED - SOUTH ELEVATION
3/32" = 1'-0"

PRELIMINARY - NOT FOR CONSTRUCTION

NOTES:

1. HEIGHT COMPLIANT WITH CITY LIMITS
2. CONCEPT ONLY - NOT FOR CONSTRUCTION
3. LAYOUT SUBJECT TO FURTHER DEVELOPMENT
4. PARKING SHOWN FOR PLANNING ONLY

OWNER SIGNATURE

65

REVISION STATUS

REV.	DATE	DESCRIPTION	DRAWN BY

CLIENT/CONSULTANT APPROVAL STATUS

APPROVED	**(A)**
APPROVED WITH NOTES	**(B)**
RESUBMIT	**(C)**
DISAPPROVED	**(D)**

OWNER:

ADDRESS:

DESIGN CONSULTANT:

TSABA CORP
NADIF BRACEY
254 CHAPMAN RD, STE 208 #13130
NEWARK, DELAWARE 19702
EMAIL: NADIF@TS9DESIGNS.COM

DRAWING STATUS:
30% SCHEMATIC DESIGN

DISCIPLINE:

PROJECT TITLE:
HOTEL BOGGY FORD

DRAWING TITLE:
PROPOSED ELEVATIONS

DRAWN BY:	CHECKED BY:	DATE:
A.C	N.B	
JOB NO:	SHT NO.:	SCALE:
	AR-03	3/32" = 1'-0"

1 PROPOSED - EAST ELEVATION
1/16" = 1'-0"

2 PROPOSED - WEST ELEVATION
1/16" = 1'-0"

PRELIMINARY - NOT FOR CONSTRUCTION

NOTES:

1. HEIGHT COMPLIANT WITH CITY LIMITS
2. CONCEPT ONLY - NOT FOR CONSTRUCTION
3. LAYOUT SUBJECT TO FURTHER DEVELOPMENT
4. PARKING SHOWN FOR PLANNING ONLY

OWNER SIGNATURE

REVISION STATUS

REV.	DATE	DESCRIPTION	DRAWN BY

CLIENT/CONSULTANT APPROVAL STATUS

APPROVED	**(A)**
APPROVED WITH NOTES	**(B)**
RESUBMIT	**(C)**
DISAPPROVED	**(D)**

OWNER:

ADDRESS:

DESIGN CONSULTANT:

TSABA CORP
NADIF BRACEY
254 CHAPMAN RD, STE 208 #13130
NEWARK, DELAWARE 19702
EMAIL: NADIF@TS9DESIGNS.COM

DRAWING STATUS:
30% SCHEMATIC DESIGN

DISCIPLINE:

PROJECT TITLE:
HOTEL BOGGY FORD

DRAWING TITLE:
PROPOSED ELEVATIONS

DRAWN BY:	CHECKED BY:	DATE:
A.C	N.B	
JOB NO:	SHT NO.:	SCALE:
	AR-04	1/16" = 1'-0"

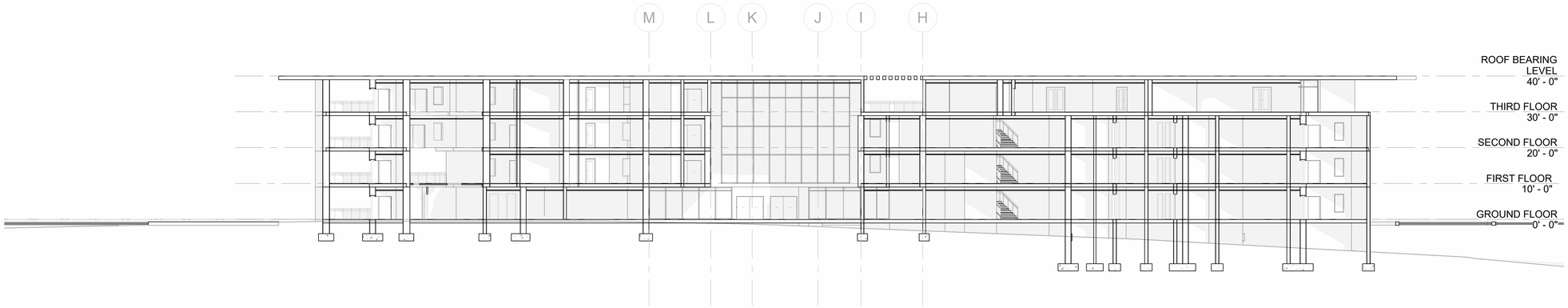

3 PROPOSED - SECTION C-C
1/16" = 1'-0"

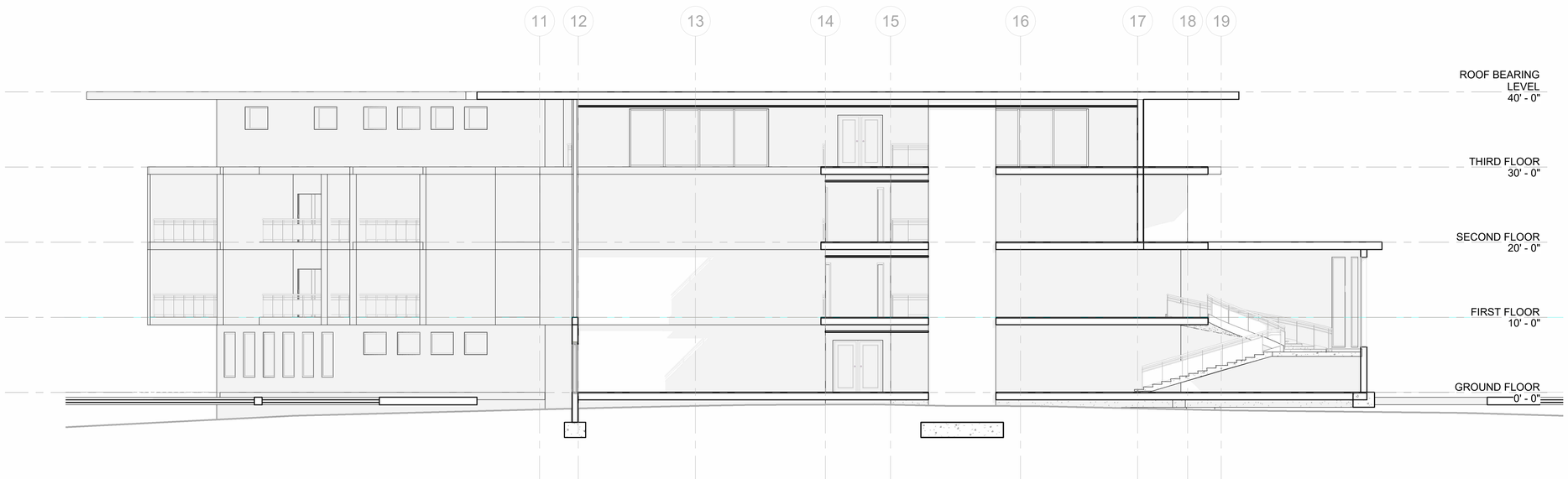

1 PROPOSED - SECTION D-D
1/8" = 1'-0"

PRELIMINARY - NOT FOR CONSTRUCTION

NOTES:

1. HEIGHT COMPLIANT WITH CITY LIMITS
2. CONCEPT ONLY - NOT FOR CONSTRUCTION
3. LAYOUT SUBJECT TO FURTHER DEVELOPMENT
4. PARKING SHOWN FOR PLANNING ONLY

OWNER SIGNATURE

REVISION STATUS

REV.	DATE	DESCRIPTION	DRAWN BY

CLIENT/CONSULTANT APPROVAL STATUS

APPROVED	**(A)**
APPROVED WITH NOTES	**(B)**
RESUBMIT	**(C)**
DISAPPROVED	**(D)**

OWNER:

ADDRESS:

DESIGN CONSULTANT:

TSABA CORP
NADIF BRACEY
254 CHAPMAN RD, STE 208 #13130
NEWARK, DELAWARE 19702
EMAIL: NADIF@TS9DESIGNS.COM

DRAWING STATUS:
30% SCHEMATIC DESIGN

DISCIPLINE:

PROJECT TITLE:
HOTEL BOGGY FORD

DRAWING TITLE:
PROPOSED SECTIONS

DRAWN BY:	CHECKED BY:	DATE:
A.C	N.B	
JOB NO:	SHT NO.:	SCALE:
	AR-05	As indicated

EXHIBIT B-7

ADDITIONAL CONCEPT DRAWINGS

EXHIBIT B-8

AUSTIN ETJ RELEASE AREA MAPS

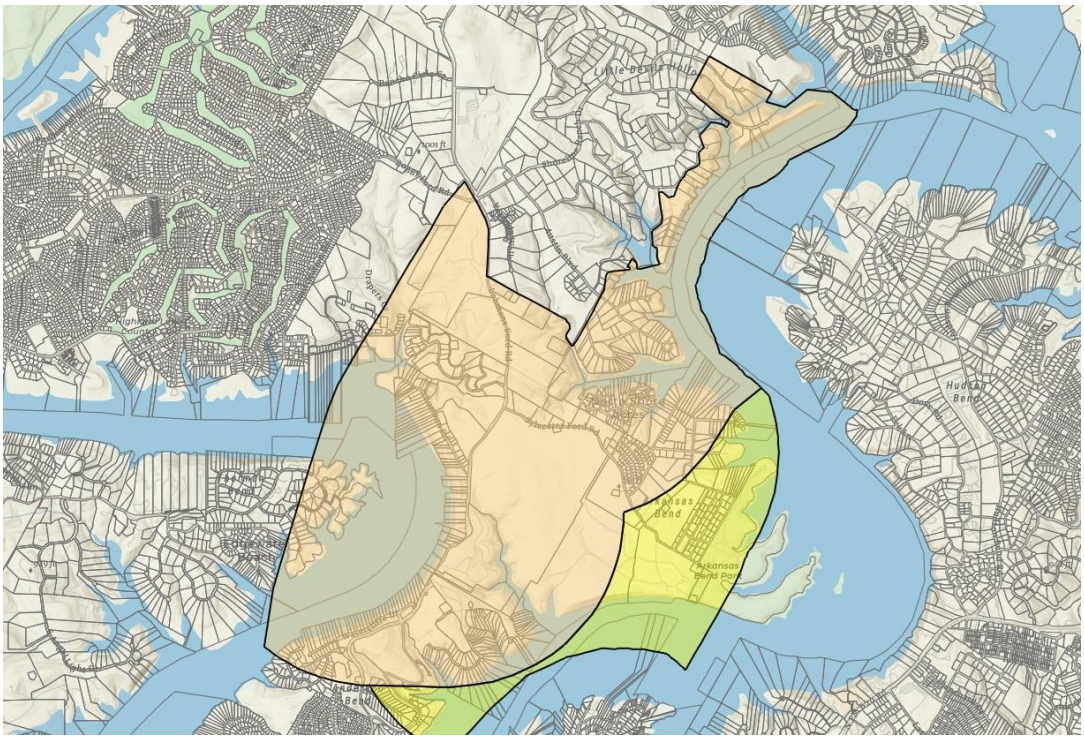

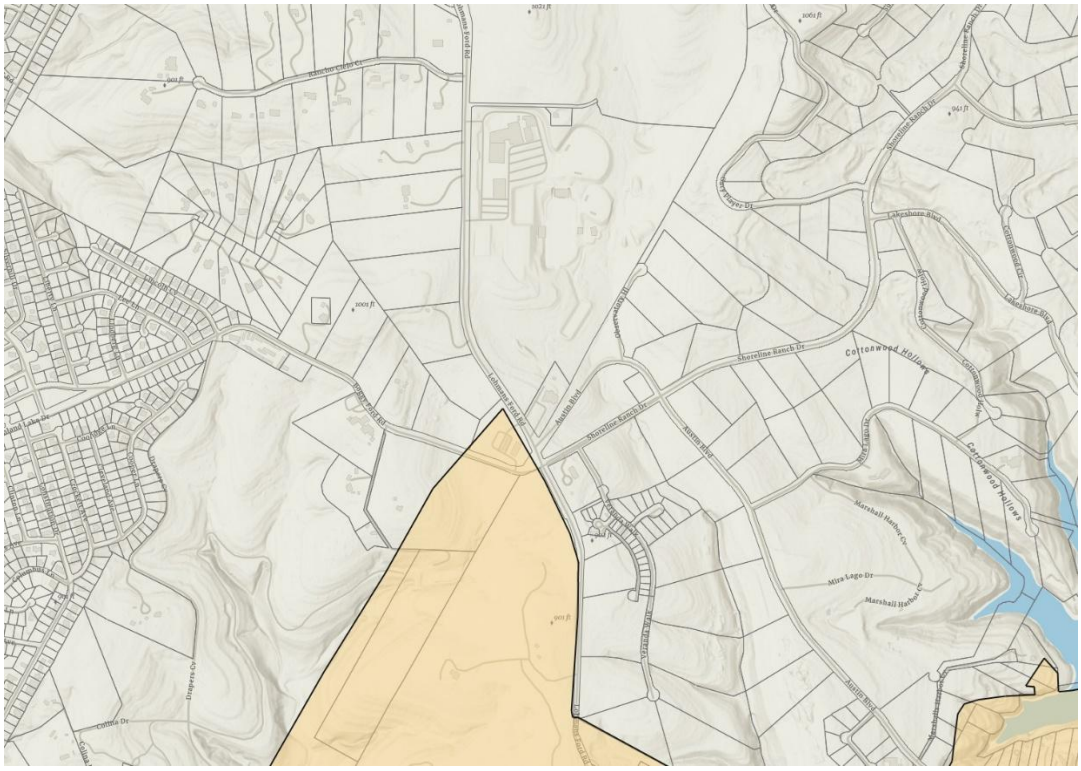

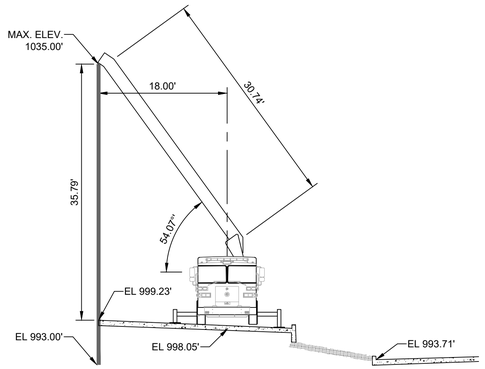

POSITION 1
ELEVATION VIEW
1
0 5' 10' 20'
SCALE: 1" = 10'

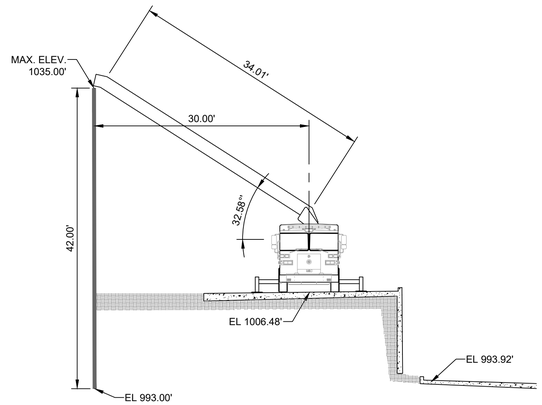

POSITION 2
ELEVATION VIEW
2
0 5' 10' 20'
SCALE: 1" = 10'

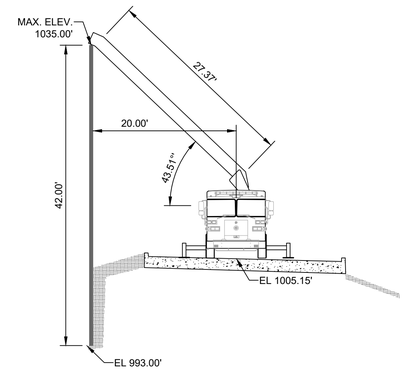

POSITION 3
ELEVATION VIEW
3
0 5' 10' 20'
SCALE: 1" = 10'

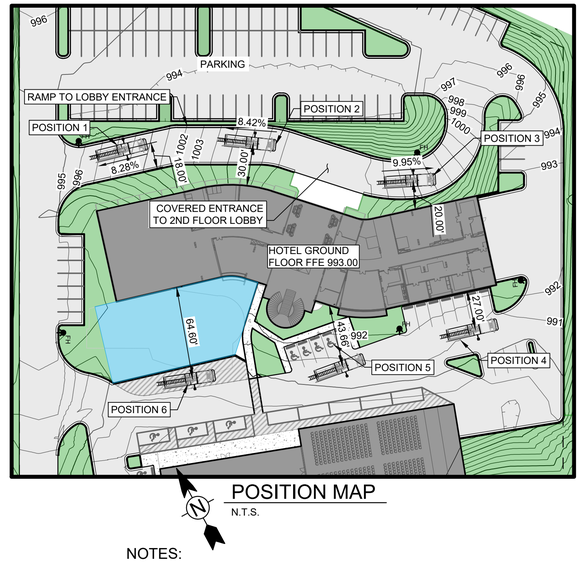

POSITION MAP
N.T.S.

NOTES:

1. ALL ELEVATIONS SHOWN ARE APPROXIMATE.
2. OUTRIGGERS ARE SHOWN AT FULL EXTENSION.
3. LADDER EXTENSION NOT TO EXCEED 75'
4. TRUCK SHOWN IS BASED OFF DATA DOWNLOADED FOR SUTPHEN MODEL SL75 FROM THE MANUFACTURER'S WEB SITE ON 05/30/2025.

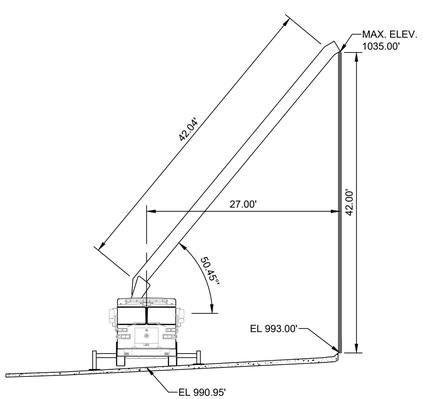

POSITION 4
ELEVATION VIEW
4
0 5' 10' 20'
SCALE: 1" = 10'

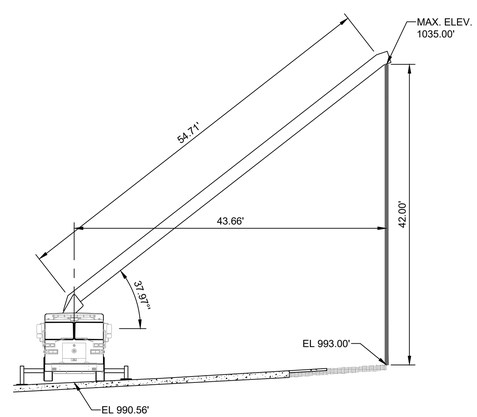

POSITION 5
ELEVATION VIEW
5
0 5' 10' 20'
SCALE: 1" = 10'

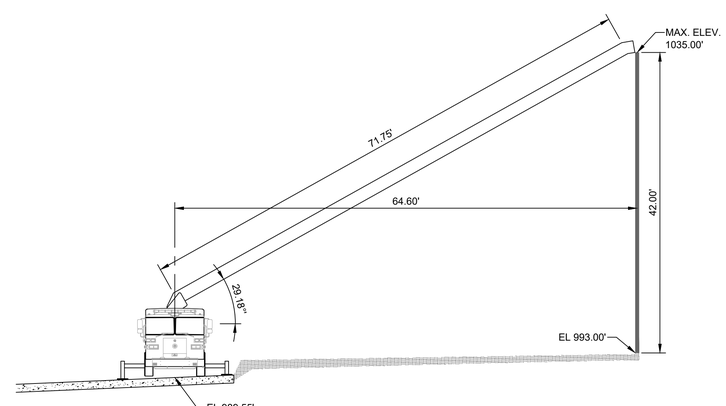

POSITION 6
ELEVATION VIEW
6
0 5' 10' 20'
SCALE: 1" = 10'

STATE OF TEXAS
WILLIAM E. PARNELL
121598
LICENSED
PROFESSIONAL ENGINEER
03/25/26

parnell engineering
www.parnellengineeringinc.com
500 E. WHITESTONE BLVD (#1419)
CEDAR PARK, TX 78613
512-431-8411
TEXAS REGISTRATION FIRM NO. F-19566

MARK	DATE	DESCRIPTION	BY

LAVERNE DEVELOPERS
VISTA VERDE RESORT HOTEL
19708 BOGGY FORD ROAD, LAGO VISTA, TEXAS 78645

VERTICAL FIRE ACCESS ELEVATIONS

Project No:
Designed By:
Drawn By:
Checked By:

F1
Sheet of 29

File No: 2511.01 ########

Copyright: Parnell Engineering

Bar Measures 1 inch, otherwise drawing not to scale

3/25/2026 11:26:41 AM - J:\2511_LAVERNE DEVELOPERS\2511.01 VISTA VERDE RESORT HOTEL\CAD\EXHIBITS\F1 VERTICAL FIRE ACCESS ELEVATIONS.DWG - MIKE RECTOR

EXHIBIT "C"
Signage Plan

C-1 Signage Plan

0 25' 50' 100'
SCALE: 1" = 50'

LEGEND

EXISTING

- 735 — MAJOR CONTOUR
- 734 — MINOR CONTOUR
- PROPERTY BOUNDARY
- ADJOINER LINE
- #FM — WASTEWATER FORCE MAIN LINE
- #W — WATER LINE
- OE — OVERHEAD POWER LINE
- POWER POLE
- XXX — TREE TO REMAIN AND TREE ID NO.

PROPOSED

- BUILDING
- CONCRETE
- PAVED DRIVE AND PARKING
- LANDSCAPED AREAS (PER CITY OF LAGO VISTA LANDSCAPING REQUIREMENTS AND GUIDELINES)
- FH — FIRE HYDRANT
- DIRECTIONAL SIGN
- IDENTIFICATION SIGN

SIGNAGE NOTE:

SIGNAGE SHOWN IS FOR VEHICULAR TRAFFIC ONLY. SMALL PLACARDS AND SIGNS FOR PEDESTRIAN USAGE IS NOT SHOWN.

STATE OF TEXAS
WILLIAM E. PARNELL
121598
LICENSED
PROFESSIONAL ENGINEER
03/25/26

parnell engineering
www.parnellengineeringinc.com
500 E. WHITESTONE BLVD (#1419)
CEDAR PARK, TX 78613
512-431-8411
TEXAS REGISTRATION FIRM NO. F-19566

MARK	DATE	DESCRIPTION	BY

LAVERNE DEVELOPERS
VISTA VERDE RESORT HOTEL
19708 BOGGY FORD ROAD, LAGO VISTA, TEXAS 78645
SIGNAGE PLAN

Project No:
Designed By:
Drawn By:
Checked By:

C-1

File No: 2511.01

Copyright: Parnell Engineering

Bar Measures 1 inch, otherwise drawing not to scale

3/25/2026 10:46:34 AM - J:\2511_LAVERNE DEVELOPERS\2511.01 VISTA VERDE RESORT HOTEL\CAD\EXHIBITS\C-1 SIGNAGE PLAN.DWG - MIKE RECTOR

EXHIBIT “D”
Tree Preservation Plan

D-1 Tree Preservation Plan

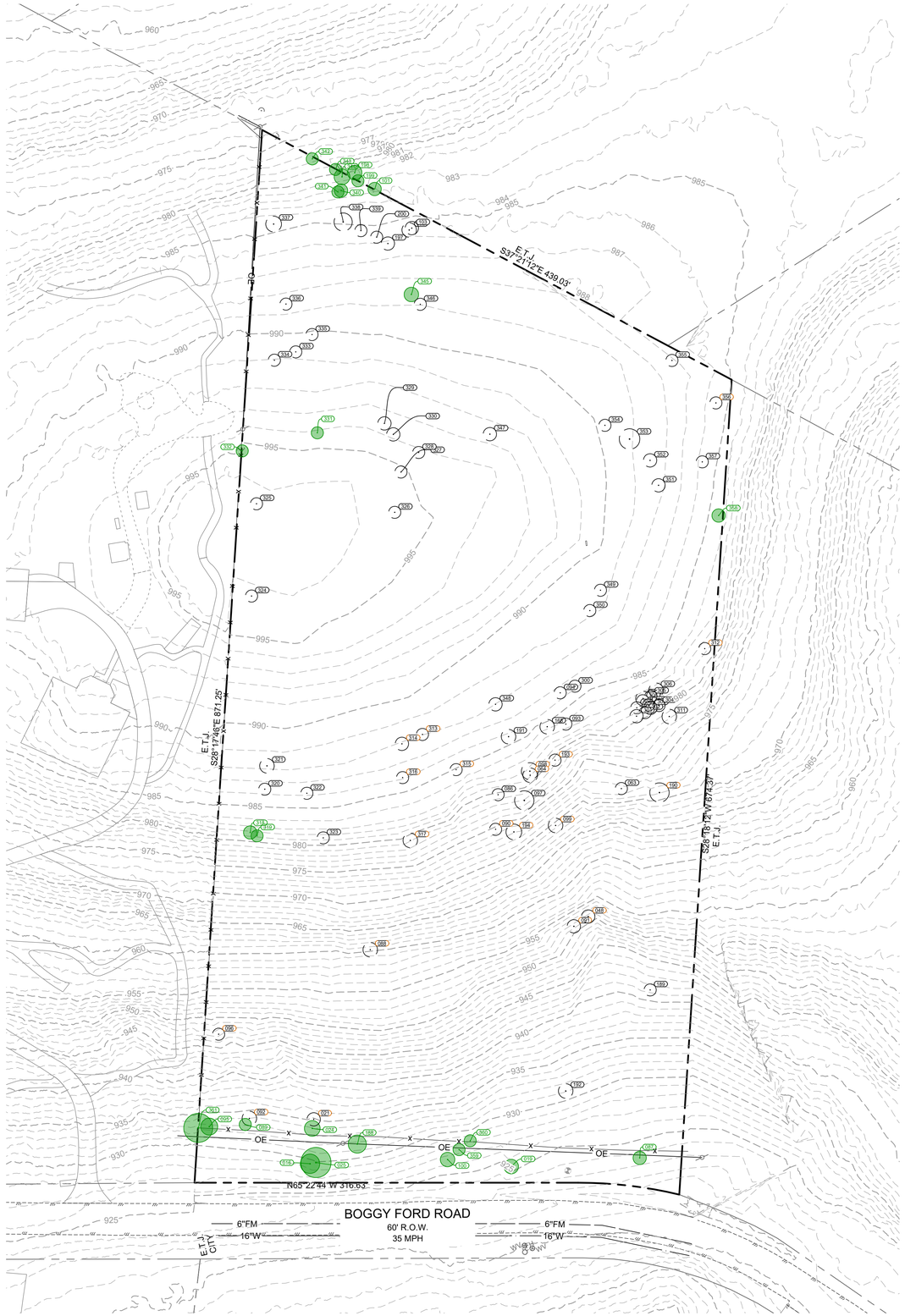

TREES TO REMAIN	
TREE #	DESCRIPTION
016	16" OAK
019	12" OAK
024	13" OAK
025	25" OAK
087	11" OAK
089	10" OAK
095	14" OAK
100	12" OAK
101	11" OAK
188	15" OAK
198	12" OAK
199	10" OAK
300	10" OAK
318	11" OAK
319	10" OAK
331	10" OAK
332	10" OAK
340	11" OAK
341	10" OAK
342	10" OAK

TREES TO REMAIN	
TREE #	DESCRIPTION
343	10" OAK
344	13" OAK
345	12" OAK
358	11" OAK
359	10" OAK
360	10" OAK
361	24" CEDAR

TREES TO REMOVE	
TREE #	DESCRIPTION
021	11" OAK
048	11" OAK
063	10" OAK
064	12" OAK
086	10" OAK
088	12" OAK
090	10" OAK
091	11" OAK
092	12" OAK
093	10" OAK
094	10" OAK
096	10" OAK
097	16" OAK
098	14" OAK
099	12" OAK
102	12" OAK
103	11" OAK
168	12" OAK
189	10" OAK
190	16" OAK
191	12" OAK
192	12" OAK
193	10" OAK
194	13" OAK
197	11" OAK
200	10" OAK
300	10" OAK
301	11" OAK
302	10" OAK
303	11" OAK
304	10" OAK
305	10" OAK
306	12" OAK
307	12" OAK
308	10" OAK
309	10" OAK
310	10" OAK
311	12" OAK
312	10" OAK
313	10" OAK

TREES TO REMOVE	
TREE #	DESCRIPTION
314	11" OAK
315	10" OAK
316	10" OAK
317	12" OAK
320	10" OAK
321	12" OAK
322	10" OAK
323	10" OAK
324	10" OAK
325	10" OAK
326	10" OAK
327	10" OAK
328	10" OAK
329	11" OAK
330	11" OAK
333	10" OAK
334	10" OAK
335	10" OAK
336	10" OAK
337	13" OAK
338	15" OAK
339	10" OAK
346	10" OAK
347	11" OAK
348	11" OAK
349	10" OAK
350	10" OAK
351	11" OAK
352	11" OAK
353	17" OAK
354	10" OAK
355	10" OAK
356	10" OAK
357	10" OAK

0 25' 50' 100'
SCALE: 1" = 50'

LEGEND

EXISTING

- 735 — MAJOR CONTOUR
- 734 — MINOR CONTOUR
- PROPERTY BOUNDARY
- ADJOINER LINE
- #FM — WASTEWATER FORCE MAIN LINE
- #W — WATER LINE
- OE — OVERHEAD POWER LINE
- POWER POLE
- XXX — TO BE REMOVED TREE WITH ID NO.
- XXX — TO REMAIN TREE WITH ID NO.

STATE OF TEXAS
WILLIAM E. PARNELL
121598
LICENSED
PROFESSIONAL ENGINEER
3/25/26

parnell engineering
www.parnellengineeringinc.com
500 E. WHITESTONE BLVD (#1419)
CEDAR PARK, TX 78613
512-431-8411
TEXAS REGISTRATION FIRM NO. F-19566

MARK	DATE	DESCRIPTION	BY

LAVERNE DEVELOPERS
VISTA VERDE RESORT HOTEL
19708 BOGGY FORD ROAD, LAGO VISTA, TEXAS 78645
TREE PRESERVATION PLAN

Project No:
Designed By:
Drawn By:
Checked By:

D-1

File No: 2511.01

Copyright: Parnell Engineering

Bar Measures 1 inch, otherwise drawing not to scale

3/25/2026 10:41:04 AM - J:\2511_LAVERNE DEVELOPERS\2511.01 VISTA VERDE RESORT HOTEL\CAD\EXHIBITS\D-1 TREE PRESERVATION PLAN.DWG - MIKE RECTOR

AGENDA ITEM NO. X.1

Item Cover Page

CITY COUNCIL AGENDA ITEM REPORT

DATE: June 4, 2026

SUBMITTED BY: Jordan Strohmeyer, Development Services

SUBJECT: Consider, discuss, and take action on Ordinance No. 26-06-04-02 Amending Chapter 3, "Building Regulations," of the City of Lago Vista Code of Ordinances; Adopting Updated Building, Residential, Fire, Existing Building, Mechanical, Plumbing, Fuel Gas, Swimming Pool, Electrical, and Life Safety Codes; Providing for Local Amendments, Administrative Procedures, Permit Requirements, Permit Expiration and Extension Procedures, Design Criteria, Development Procedure Manual References, and Related Building Regulation Requirements; Providing for Conflicts, Severability, Savings, Publication, and an Effective Date.

BACKGROUND:

The City of Lago Vista maintains adopted construction and life-safety codes through Chapter 3 of the Code of Ordinances. These regulations establish minimum standards for building construction, permitting, inspections, fire protection, drainage coordination, electrical systems, plumbing systems, and related site development activities within the City.

The proposed ordinance updates Chapter 3 to align with currently adopted model construction codes and modern administrative practices while maintaining consistency with applicable Texas Local Government Code requirements and other state law authorities.

The ordinance formally adopts the following updated model codes by reference:

- 2021 International Building Code;
- 2021 International Residential Code;
- 2021 International Existing Building Code;
- 2021 International Fire Code;
- 2021 International Mechanical Code;
- 2021 International Plumbing Code;
- 2021 International Fuel Gas Code;

- 2021 International Swimming Pool and Spa Code;
- 2023 National Electrical Code (NFPA 70); and
- 2021 NFPA 101 Life Safety Code.

The ordinance also incorporates updated local administrative amendments addressing permit expiration timelines, permit extensions, drainage protections, erosion control requirements, fire access standards, local design criteria, digital plan submittals, and coordination with adopted administrative and engineering manuals.

Additionally, the ordinance establishes references to the Development Procedure Manual, Design and Construction Standards Manual, and related administrative documents intended to improve consistency in permit processing, inspections, technical review procedures, and construction administration.

FINDINGS:

- The proposed ordinance modernizes Chapter 3 and consolidates building-related administrative requirements into a more organized and enforceable regulatory framework.
- The proposed amendments align the City's adopted construction codes with current model code editions and industry standards utilized throughout Texas and the region.
- The ordinance clarifies permit expiration, extension, inspection, and enforcement procedures to improve administrative consistency and transparency for applicants, contractors, and staff.
- The ordinance establishes objective local design criteria related to wind exposure, frost depth, drainage, wildfire mitigation considerations, floodplain coordination, and emergency access requirements applicable to local environmental and topographic conditions.
- The proposed amendments maintain coordination with existing zoning, subdivision, floodplain, drainage, and utility regulations and clarify that issuance of permits does not waive compliance with other applicable laws or ordinances.
- The ordinance provides administrative flexibility through adopted manuals and technical standards while maintaining that local ordinances and applicable state law control in the event of conflict.

RECOMMENDATION:

Staff recommends approval of the proposed ordinance amending Chapter 3 of the City of Lago Vista Code of Ordinances to modernize and clarify the City's adopted construction codes, administrative

procedures, permit requirements, local amendments, and technical design standards.

ATTACHMENTS:

Chapter 3-Redline.pdf.docx
Administrative And Local Amendments To Adopted Construction Codes.pdf
ICC Code Matrix.pdf
Ordinance_No._26-06-04-02_Amedning_CH_3 (1).docx

CHAPTER 3

BUILDING REGULATIONS

ARTICLE 3.100 BUILDING CODES AND CONSTRUCTION REQUIREMENTS

Sec 3.101 Short Title
Sec 3.102 Purpose
Sec 3.103 Scope and Conflict
Sec 3.104 Definitions
Sec 3.105 Administration
Sec 3.106 Building and Fire Codes
Sec 3.107 Plumbing Code
Sec 3.108 Electrical Code
Sec 3.109 Mechanical, Fuel Gas Code, and Energy Efficiency
Sec 3.110 Permits and Approvals
Sec 3.111 Contractor Registration Requirements
Sec 3.112 Inspection Requirements
Sec 3.113 Certificate of Occupancy
Sec 3.114 Blasting Operations
Sec 3.115 Construction Activity Disturbances
Sec 3.116 Utility Development and Maintenance in the Streets and Rights-of-Way
Sec 3.117 Private Driveway or Parking Apron
Sec 3.118 Construction, Structures or Equipment in a Right-of-Way or Easement
Sec 3.119 Restoration of Public Streets, Including Rights-of-Way, Shoulders and Drainage Ditches
Sec 3.120 Removal and Containment of All Construction Materials, Refuse and Debris
Sec 3.121 Bonds or Deposits Required
Sec 3.122 (Reserved)
Sec 3.123 Minimum Standards for All Single-Family and Two-Family Residential Buildings
Sec 3.124 Minimum Standards for Multifamily and Nonresidential Buildings
Sec 3.125 Appeal from Denial of a Building Permit, Appeal of a City Official's Determination, or a Variance Concerning Building Codes
Sec 3.126 Penalties for Building Code Violations
Sec 3.127 Fees
Sec 3.128 Development Enforcement Tools

ARTICLE 3.1000 INDUSTRIALIZED HOUSING AND BUILDINGS

ARTICLE 3.1100 WATERSHED PROTECTION

Sec 3.1101 LCRA Highland Lakes Watershed Ordinance Adopted

ARTICLE 3.1200 SUBSTANDARD AND DANGEROUS BUILDINGS AND STRUCTURES

Sec 3.1201 Findings
Sec 3.1202 Adoption of International Property Maintenance Code and Amendments
Sec 3.1203 Chapter 214 Adopted
Sec 3.1204 Definitions

Sec 3.1205 Dangerous Buildings Declared a Nuisance
Sec 3.1206 Inspections and Duties of the Code Enforcement Authority
Sec 3.1207 Notice of Dangerous Building or Dangerous Condition of Property
Sec 3.1208 Sufficiency of Notice
Sec 3.1209 Securing Dangerous Building
Sec 3.1210 Duties of the Building and Standards Commission
Sec 3.1211 Appeal of the Building and Standards Commission Order
Sec 3.1212 City Council Action
Sec 3.1213 Judicial Review
Sec 3.1214 Assessment of Expenses and Penalties
Sec 3.1215 Violations
Sec 3.1216 Penalty
Sec 3.1217 Enforcement of Regulations
Sec 3.1218 Amendment of Ordinances

ARTICLE 3.1300 PUBLIC RIGHT-OF-WAY MANAGEMENT

Sec 3.1301 Purpose
Sec 3.1302 Governing Law
Sec 3.1303 Definitions
Sec 3.1304 Use and Occupancy of Public Rights-of-Way
Sec 3.1305 Compliance with Design Manual and Applicable Codes
Sec 3.1306 General Construction and Maintenance Requirements
Sec 3.1307 Permit Applications
Sec 3.1308 Installation in Historic Districts or Design Districts
Sec 3.1309 Installation in Municipal Parks and Residential Areas
Sec 3.1310 Municipal Review Process by the City
Sec 3.1311 Time of Installation
Sec 3.1312 Applicable Fees and Rental Rates to the City
Sec 3.1313 Indemnity
Sec 3.1314 Effect on Other Utilities and Telecommunication Providers

ARTICLE 3.1400 DRAINAGE AND EROSION CONTROL REGULATIONS

Sec.3.1401 Drainage
Sec 3.1402 Erosion Control
Sec 3.1403 Penalties

ARTICLE 3.200 WIRELESS COMMUNICATION SYSTEMS

ARTICLE 3.300 STREET CUTS AND EXCAVATIONS

Sec 3.301 General
Sec 3.302 Fine

ARTICLE 3.400 TRENCH SAFETY

Sec 3.401 Purpose and Description
Sec 3.402 Safety System
Sec 3.403 Construction Methods

Sec 3.404 Safety Program
Sec 3.405 Inspection
Sec 3.406 Indemnification
Sec 3.407 Measurement
Sec 3.408 Payment

ARTICLE 3.500 RECREATIONAL VEHICLE PARK REGULATIONS

Sec 3.501 Title and Purpose
Sec 3.502 Definitions
Sec 3.503 Conflict of Ordinances
Sec 3.504 Penalty
Sec 3.505 Recreational Vehicle Park License / Fee
Sec 3.506 - 3.520 (Reserved)
Sec 3.521 Recreational Vehicle Park Standards
Sec 3.522 Responsibilities of a Recreational Vehicle Park Licensee or Resident
Sec 3.523 Residents Responsibilities
Sec 3.524 - 3.530 (Reserved)
Sec 3.531 Inspection Authority and Violations
Sec 3.532 Property Within Flood-Prone Areas (The Floodplain)

ARTICLE 3.600 RESERVED

ARTICLE 3.700 RESERVED

ARTICLE 3.800 OUTDOOR OR EXTERIOR LIGHTING

Sec 3.801 Purpose
Sec 3.802 Definitions
Sec 3.803 Scope and Applicability
Sec 3.804 Procedures and Compliance
Sec 3.805 Lamps, Fixtures, Shielding and Output Limits
Sec 3.806 Lighting for Outdoor Signs and Decorative Lighting
Sec 3.807 Lighting Curfews

ARTICLE 3.900 FLOOD REGULATIONS

Sec 3.901 Statutory Authorization
Sec 3.902 Findings of Fact
Sec 3.903 Statement of Purpose
Sec 3.904 Methods of Reducing Flood Losses
Sec 3.905 Definitions
Sec 3.906 Lands to Which This Article Applies
Sec 3.907 Basis for Establishing the Areas of Special Flood Hazard
Sec 3.908 Establishment of Development Permit
Sec 3.909 Compliance
Sec 3.910 Abrogation and Greater Restrictions
Sec 3.911 Interpretation
Sec 3.912 Warning and Disclaimer of Liability

Sec 3.913 Designation of the Floodplain Administrator
Sec 3.914 Duties and Responsibilities of the Floodplain Administrator
Sec 3.915 Permit Procedures
Sec 3.916 Variance Procedures
Sec 3.917 Provisions for Flood Hazard Reduction; General Standards
Sec 3.918 Specific Standards
Sec 3.919 Standards for Subdivision Proposals
Sec 3.920 Standards for Areas of Shallow Flooding (AO/AH Zones)
Sec 3.921 Floodways (Reserved)
Sec 3.922 Penalty

ARTICLE 3.100 BUILDING CODES AND CONSTRUCTION REQUIREMENTS*

Sec 3.101 Short Title

This article shall be known as and may be cited as the building code of the city.

Sec 3.102 Purpose

This article provides minimum standards to preserve and promote the health, safety, property and general welfare of the people by regulating and controlling the design, construction, quality of materials, surface water, use and occupancy, location and maintenance of all buildings and structures within the city, including certain electrical, plumbing and mechanical equipment specifically regulated herein.

Sec 3.103 Scope and Conflict

(a) Scope. The provisions of this article shall apply to the erection, construction, enlargement, alteration, major repair, residing, moving, improving, converting, using or occupying any building or structure in the city. This article also provides requirements for site preparation, blasting, surface water control and other related construction matters. This article recognizes, adopts and may provide for all applicable building codes.

(b) Other Requirements. Additional and related local ordinance requirements include, but are not limited to, the provisions within Chapter 3.5, Chapter 10, Chapter 11, Chapter 13, Chapter 14, and the Technical Construction Standard Specifications (TCSS) adopted as Ordinance Number 19-02-21-02 as amended. The TCSS is incorporated by reference herein and shall be deemed to have the same force and effect as if set forth in full herein.

(c) Conflict. Where, in any specific case, this article conflicts with the codes adopted by reference, such as the International Building Code, this article will govern, except as required by state law. Conflicts between this article and other ordinances of the City of Lago Vista shall be interpreted so that the more restrictive requirement shall prevail, and if the standards or procedures in this article are different from any other ordinance, the conflict shall be interpreted in a manner consistent with the intent of the applicable ordinances and governing law, as determined by the City Manager or designee.

(Ordinance 09-11-05-01 adopted 11/5/09; Ord. 22-07-07-04 on 7/7/2022)

***State law references—**International Residential Code adopted as a municipal residential building code, V.T.C.A., Local Government Code, sec. 214.212; building and residential codes, V.T.C.A., Local Government Code, sec. 214.211 et seq.; National Electrical Code adopted as the municipal residential electrical code, V.T.C.A., Local Government Code, sec. 214.214; adoption of rehabilitation codes or provisions, V.T.C.A., Local Government Code, sec. 214.215; International Building Code adopted as municipal commercial building code, V.T.C.A., Local Government Code, sec. 214.216; adoption of building energy efficiency performance standards, V.T.C.A., Health and Safety Code, sec. 388.003; adoption of plumbing codes and amendment of codes by municipality, V.T.C.A., Occupations Code, sec. 1301.255(d), Authority of city to establish fire regulations, V.T.C.A., Local Government Code, sec. 342.003.

Sec 3.104 Definitions

Definitions not supplied herein shall be obtained from adopted editions of the International Building Code, International Mechanical Code, International Plumbing Code, National Electrical Code, International Property Maintenance Code, International Fuel Gas Code, International Energy Conservation Code, the International Fire Code and Webster's Third New International Dictionary of the English language, unabridged.

Alterations. Any change, addition or modification in construction, any change in the structural members of the building, such as exterior walls, columns, beams or girders, the consummated act of which may be referred to herein as "altered" or "reconstructed."

Antenna Support Structures.

(a) *Monopole Antenna Structure*. A self-supporting, pole-type structure with no guy wire support, tapering from base to top and so designed to support fixtures which hold one or more antennas and related equipment for wireless telecommunication transmission.

(b) *Lattice Antenna Structure*. A steel lattice, self-supporting structure with no guy wire support, so designed to support fixtures which hold one or more antennas and related equipment for wireless communication transmission.

(c) *Guyed Lattice Antenna Structure*. A steel lattice, guy wire supported structure, so designed to support fixtures which hold one or more antennas and related equipment for wireless communication transmission.

Apprentice Electrician. A person undertaking the learning of the electrical trade and doing electrical work under the direct, constant personal supervision and control of either a licensed master electrician or a journeyman electrician and who has been properly licensed by the state department of licensing and regulation.

Building. Any structure either temporary or permanent, having a roof or other covering and designed or used for the shelter or enclosure of any person, animal, or property of any kind, including, but not limited to, tents, awnings or vehicles situated on private property and used for the purpose of a building.

Building Height. See Section 2.10 of Chapter 14.

Building or Other Independent Support Structures. Buildings or other structures such as water towers, church steeples, utility poles and other creative locations.

Certificate of Occupancy. A certificate granting inhabitation of a structure issued by the city upon the satisfactory completion of all city ordinances, policies and regulations.

City. The word city as used in this article shall refer to the City of Lago Vista.

City Engineer. A person or entity so qualified according to state regulations to provide the required services.

Container Homes. Also known as "shipping container homes," are a type of dwelling made out of steel shipping containers that are typically used to transport goods on trucks, trains, and ships. These containers are repurposed and modified to create livable spaces.

Dwelling. Any building which contains one or more "dwelling units" or "guest rooms" used, intended or designed to be built, used, rented, leased, let or hired out to be occupied, or which are occupied for living purposes.

Dwelling Unit. A single unit providing complete, independent living facilities for one or more persons including permanent provisions for living, sleeping, eating, cooking, and sanitation.

Electrical Wiring and Apparatus. All materials, devices, machinery, appliances, appurtenances or conductors used in connection with the production of electric lights, heat or power or the transmission of electrical signals.

Erosion. The process by which the ground surface is worn away by the action of wind and/or water and material therefrom is carried, or is likely to be carried, across any property line in significant quantities.

Excavation. Any breaking of ground on the site by mechanical means, but does not include operations in securing survey or geological data including necessary borings to ascertain subsurface conditions for foundations and septic systems.

Floor Area and Living Area. See Chapter 14.

Grading. Any act by which soil, rock, or mineral matter is cut into, dug, uncovered, removed, displaced or relocated; and includes the removal of vegetation, excavation and land balancing.

Graywater System. A graywater sewage system may consist only of wastewater from showers, tubs, lavatories, clothes washer, the nongarbage disposal side of a two-compartment sink and from a bar sink.

Impervious Cover. Any structure or surface not permitting the absorption of water.

Industrialized Building. A commercial structure that:

(a) Is constructed in one or more modules or constructed using one or more modular components built at a location other than the commercial site;

(b) Is designed to be used as a commercial building when the module or the modular components are transported to the commercial site and erected or installed;

(c) Includes the structure's plumbing, heating, air conditioning, and electrical systems; and

(d) Includes a permanent commercial structure and a commercial structure designed to be transported from one commercial site to another commercial site but does not include a commercial building or structure that is:

(1) Installed in a manner other than on a permanent foundation; and

(2) Either:

(A) Not open to the public; or

(B) Less than 1,500 square feet in total area and used other than as a school or a place of religious worship.

Industrialized Housing.

(a) A residential structure that is:

(1) Designed for the occupancy of one or more families;

(2) Constructed in one or more modules or constructed using one or more modular components built at a location other than the permanent site, including modular components constructed of shipping containers; and,

(3) Designed to be used as a permanent residential structure when the module or modular component is transported to the permanent site and erected or installed on an engineered permanent foundation system.

(b) Industrialized housing includes the structure's plumbing, heating, air conditioning, and electrical systems.

(c) Industrialized Housing does not include:

(1) Housing constructed of a sectional or panelized system that does not use a modular component; or

(2) A ready-built home constructed in a manner in which the entire living area is contained in a single unit or section at a temporary location for the purpose of selling and moving the home to another location.

(d) Only housing designed as single-family housing, duplexes, townhouses, or apartments are considered industrialized housing. Residential occupancies such as dormitories and motels or hotels would be considered industrialized buildings, not industrialized housing.

Journeyman Electrician. Except as otherwise provided, a person undertaking electrical work under the supervision, direction and control of a licensed master electrician and who has been properly licensed by the state department of licensing and regulations. The term "journeyman electrician," however, shall not include an apprentice electrician, and nothing in this article shall be construed as prohibiting an apprentice electrician from doing electrical work under the direct, constant, personal supervision and control of either a licensed master or journeyman electrician.

Manufactured Home. Prefabricated housing products which are typically manufactured or assembled at a location other than the end user's permanent site, and which are regulated by the Texas Manufactured Housing Standards Act. For the purposes of this Ordinance there are two types of manufactured homes.

(a) *HUD-Code Manufactured Home*.

(1) A HUD-Code Manufactured Home refers to a structure that is:

(A) Constructed on or after June 15, 1976, according to the rules of the US Department of Housing and Urban Development;

(B) Built on a permanent chassis;

(C) Designed to use as a dwelling with or without a permanent foundation when the structure is connected to the required utilities;

(D) Transportable in one or more sections; and

(E) In the traveling mode, at least eight body feet in width or at least 40 body feet in length or, when erected on site, at least 320 square feet in area.

(2) Includes the plumbing, heating, air conditioning and electrical systems of the home, and

(3) Each unit is identified by the presence of a HUD Plate/Compliance Certificate label.

(b) *Mobile Home*.

(1) A Mobile Home refers to a structure that is:

(A) Constructed before June 15, 1976;

(B) Built on a permanent chassis;

(C) Designed to use as a dwelling with or without a permanent foundation when the structure is connected to the required utilities;

(D) Transportable in one or more sections; and

(E) In the traveling mode, at least eight body feet in width or at least 40 body feet in length or, when erected on site, at least 320 square feet in area.

(2) Includes the plumbing, heating, air conditioning and electrical systems of the home.

Master Electrician. A person skilled in the planning, supervision, installation, alteration or changing of electric wiring and apparatus and familiar with the rules, laws and regulations governing such and who has been licensed by the state department of licensing and regulations.

Modular Building. See Industrialized Building.

Modular Home. See Industrialized Housing.

Multifamily. Any development having more than two residential dwelling units on a single lot.

Person. An individual, proprietorship, partnership, joint venture, private or public corporation, association, firm, public service company, cooperative, political subdivision, municipal corporation, government agency, public utility district, or any other entity, public or private, however organized.

Repair. The reconstruction, renovation or renewal of any part of an existing building for the purpose of its maintenance. Such term shall not apply to any change in construction, alteration, or addition to a building other than for the purpose of reconstruction, renovation or renewal.

Retaining Wall. A structure that is constructed between lands of different elevations to stabilize the surfaces, prevent erosion, and/or protect structures. Retaining walls not taller than 18 inches may also be used to identify property lines, driveways, etc. Retaining walls taller than 18 inches above the material being retained shall be considered regulated by the zoning ordinance as that ordinance addresses fences. Retaining walls may also be subject to structural and engineering requirements under this article.

Seal. A device or insignia issued by the state or federal government to be affixed to manufactured homes and mobile homes to indicate compliance with the standards, rules, and regulations established by the state or the U.S. Department of Housing and Urban Development. The term also applies to any device or insignia issued by the Texas Industrialized Building Code Council relating to industrialized buildings, including modular homes. Any state seal shall remain the property of the state.

Site Preparation. Any clearing of trees and other vegetation and/or disturbing or grading the land with equipment such as "bobcats," bulldozers, backhoes and graders. This definition does not include normal lot maintenance such as mowing, trimming and pruning. Also, this definition does not include efforts necessary for securing survey or geological data including necessary borings to ascertain subsurface conditions and percolation rates for planned septic fields.

Structure. Anything constructed or erected which requires location on the ground or is attached to anything having a location on or in the ground that is of a permanent nature and such is constructed; or an erected object that is positioned on private property or in a street right-of-way of the city posing a danger or threat to the safety and/or welfare of the public. See also Section 2.10 of Chapter 14.

Swimming Pool. A body of water in an artificial or semi-artificial receptacle, structure or container located outdoors, either above ground or below ground, that contains water over 24 inches in depth, used or intended to be used for public, semipublic, or private swimming, and includes swimming pools used or intended to be used solely by the owner or others without payment of any fee.

Unmanned Equipment Building. An accessory building housing electronic and communication equipment as an associated and permitted part of a wireless communication system.

Wireless Communication System. Antennae and antenna support structures for mobile and land based telecommunications facilities including, but not limited to, whip antennas, panel antennas, microwave dishes and receive-only satellite dishes, cell enhancers and related equipment for wireless transmission from a sender to one or more receivers, such as for mobile cellular telephones, mobile radio systems facilities, commercial mobile radio service and radio or television (commercial only) broadcasting towers and transmitting stations. This definition is inclusive of the placement of the above referenced equipment on a monopole tower, guyed steel lattice tower and any communication tower which does or does not utilize guy wire support in addition to existing buildings or other independent support structures. This system shall also allow as one of its components an unmanned equipment shelter. See Section 19 of Chapter 14.

Zoning Districts. The zoning districts provided for in the city's zoning ordinance. See Chapter 14. (Ordinance 09-11-05-01 adopted 11/5/09; Ordinance O-31-14 adopted 12/18/14; Ord. 18-12-06-03 on 12/6/2018; Ord. 23-08-03-02 on 8/3/2023; Ord. 24-05-16-03 on 5/16/2024; Ord. 24-08-01-04 on 8/1/2024)

Sec 3.105 Administration

This section prescribes the administration of this article.

(a) City Manager. The city manager, or his/her designee, is hereby authorized and directed to enforce this article except where other specific guidance is provided herein. The city

manager, or his/her designee, will review and approve or disapprove applications for various permits, issue building permits and will also perform inspections of new construction prior to issuing a certificate of occupancy.

(b) Reports and Records. The city manager, or his/her designee, shall submit monthly activity reports, and an annual summary report to the city council by November 1 of each year, indicating the number of permits issued for single-family, duplex, multifamily, commercial, mobile home and industrial development. The city manager, or his/her designee, shall keep permanent, accurate account of all fees and other monies collected.

(c) Right to Entry. The following regulations shall regulate the right of city officials to enter buildings or property:

(1) Whenever necessary to make an inspection to enforce any of the provisions of this article, or whenever the city has reasonable cause to believe that there exists in any building or upon any premises any condition in violation of this article, the city manager or his/her designee may enter such building or premises at all reasonable times to inspect the same or to perform any duty imposed upon the city manager or his/her designee(s) by this article; provided that if such building or premises be occupied by the owner or other persons having charge or control of the building or premises cannot be located after reasonable effort or if the entry request is refused, the city council shall bring recourse to every remedy provided by law to secure such entry.

(2) It is expressly provided, however, that nothing in this subsection shall authorize any representative of the city to trespass on real property except in the exercise of entry rights accorded by, and pursuant to procedures required by, the state and federal constitutions for public inspectors of building safety.

(3) Should an owner or occupant or any other person having charge, care and control of any building or premises refuse, after proper request is made as herein provided, to promptly permit entry therein by the city or inspection agent for the purpose of inspection and examination pursuant to this article, he shall be in violation of this subsection.

(d) Stop Work Orders. Whenever any building work is being done contrary to the provisions of this article, the city may order the work stopped by notice in writing served on any person engaged in the doing or causing such work to be done and the city shall post a stop work order on the property adjacent to the posted building permit, or attached to said building and any such persons shall forthwith stop such work until authorized by the city to proceed with the work. Any person who fails to comply with a stop work order shall be guilty of a misdemeanor punishable as set forth in Section 3.126.

(e) Occupancy Violation. Whenever any structure is being used contrary to the provisions of this article, the city may order such use discontinued and the structure, or portion thereof, shall be vacated by notice served on any person causing such use to be continued. Such person shall discontinue to use within ten (10) days after receipt of such notice or make

the structure, or portion thereof, comply with the requirements of this article; provided however, that in the event of an unsafe building, Article 3.1200 of this chapter shall apply.

(f) Liability. Any person charged with the enforcement of this article for the city, acting in good faith and without malice in the discharge of his duties, shall not be liable personally and he/she is relieved from all personal liability for any damage that may accrue to persons or property as a result of any act required or by reason of any act or omission in the lawful discharge of official duties. Any suit brought against such person because of any act or omission in the performance of official duties shall be defended by the city attorney until final termination of the proceeding.

(g) Permit Application.

(1) The city shall receive all applications for building, site development and utility development permits for the city. The city manager or his/her designee(s) may confer with applicants to advise them on city ordinances, regulations and procedures applicable to their request. When all requirements are met, the applicants' building plans shall be submitted for approval in accordance with Section 3.110.

(2) The city manager or his designee shall have final approval authority for all building permits within the city. If the city denies the application, the applicant may appeal to the building and standards commission in accordance with Section 3.125.

(Ordinance 09-11-05-01 adopted 11/5/09; Ordinance 13-03-07-02, Sec 1, adopted 3/7/13; Ord. 19-01-03-01 on 1/3/2019)

Sec 3.106 Building and Fire Codes

(a) Adoption of Codes.

The following codes, including appendices expressly adopted herein, are hereby adopted by reference as the building, residential, fire, existing building, mechanical, plumbing, fuel gas, swimming pool, and electrical codes of the City of Lago Vista, Texas, as amended from time to time by ordinance:

1. 2021 International Building Code (IBC);
2. 2021 International Residential Code (IRC);
3. 2021 International Existing Building Code (IEBC);
4. 2021 International Fire Code (IFC);
5. 2021 International Mechanical Code (IMC);
6. 2021 International Plumbing Code (IPC);
7. 2021 International Fuel Gas Code (IFGC);
8. 2021 International Swimming Pool and Spa Code (ISPSC);
9. 2023 National Electrical Code (NFPA 70);
10. 2021 National Fire Protection Association Life Safety Code (NFPA 101).

(b) Scope of Application.

(1) The International Residential Code shall apply to detached one-family and two-family dwellings and townhouses within the scope of the IRC.

(2) The International Building Code shall apply to all commercial, multifamily, mixed-use, industrial, institutional, and non-IRC structures.

(3) The International Existing Building Code shall govern alterations, repairs, additions, relocation, change of occupancy, and modifications to existing structures where applicable.

(4) The International Fire Code shall govern fire prevention, life safety, fire protection systems, hazardous materials, fire department access, operational permits, and related fire safety requirements.

(5) The International Swimming Pool and Spa Code shall govern swimming pools, spas, hot tubs, aquatic facilities, barriers, suction entrapment protection, and related safety requirements.

(6) The National Electrical Code shall govern electrical installations regulated by this article.

(c) Local Amendments.

The City Council may adopt local amendments to the codes identified herein by ordinance and as authorized by applicable state law, including Texas Local Government Code Chapters 214 and 233. Local amendments shall be maintained as separate exhibits and shall have the same force and effect as if fully set forth herein. This exhibit is Titled “Development Procedure Manual” and copies can be found online and at City Hall during regular business hours

(d) Appendices.

Only those appendices specifically adopted by ordinance shall be enforceable within the City of Lago Vista. Appendices not expressly adopted are excluded.

(e) Conflict of Regulations.

(1) Where conflicts occur between the adopted codes and local amendments, the local amendments shall control.

(2) Nothing in this section shall be construed to waive or supersede:

(A) zoning regulations; (B) subdivision regulations; (C) floodplain management regulations; (D) drainage criteria; (E) site development requirements; (F) utility regulations; or (G) any other applicable local, state, or federal law.

(3) Issuance of a building permit shall not constitute approval of any violation of any applicable ordinance, regulation, easement, covenant, floodplain restriction, drainage requirement, or engineering standard.

(f) Administrative Amendments.

Administrative provisions applicable to all adopted codes may include:

(1) permit application requirements; (2) permit expiration, suspension, revocation, and renewal procedures; (3) stop-work orders; (4) inspection sequencing and procedures; (5) reinspection fees; (6) construction hours; (7) jobsite posting requirements; (8) erosion and

sediment control requirements; (9) temporary sanitation requirements; (10) certificates of occupancy and completion; (11) appeals procedures; (12) authority of the building official and fire code official; and (13) references to the City's adopted fee schedule.

(g) Local Design Criteria.

The Building Official may maintain and publish a City of Lago Vista design criteria table containing technical requirements and environmental criteria including, but not limited to:

(1) wind speed and exposure; (2) seismic design category; (3) frost depth; (4) weathering probability; (5) termite infestation probability; (6) winter design temperature; (7) rainfall intensity; (8) flood hazard references; (9) topographic exposure conditions; and (10) other site-specific engineering criteria applicable to construction within the City.

(h) Wildland-Urban Interface Areas.

(1) The City Council may adopt wildfire protection and ignition-resistant construction standards applicable to designated Wildland-Urban Interface (WUI) areas.

(2) Such standards may include:

(A) Class A roofing requirements; (B) ember-resistant venting; (C) defensible space requirements; (D) vegetation management standards; (E) fire-resistant exterior construction standards; (F) driveway and fire access standards; and (G) other wildfire mitigation measures deemed necessary for public safety.

(3) WUI regulations may apply only to designated mapped hazard areas as adopted by ordinance.

(i) Fire Access and Water Supply.

The Fire Code Official may establish technical criteria and administrative standards related to:

(1) fire apparatus access roads; (2) roadway widths and grades; (3) turnaround requirements; (4) dead-end roadway limitations; (5) fire hydrant spacing and flow; (6) fire lane markings; (7) emergency access gates and Knox systems; (8) driveway access standards; and (9) temporary fire access during construction.

(j) Existing Buildings.

The International Existing Building Code shall be utilized to facilitate reasonable reinvestment, repair, rehabilitation, occupancy changes, and reuse of existing buildings while maintaining minimum life-safety standards.

(k) Materials and Methods.

Nothing herein shall prohibit building materials or construction methods otherwise authorized by an adopted model code except where necessary to address objective life-safety, fire protection, floodplain management, structural integrity, engineering performance, or similar public safety considerations authorized by law.

(l) Energy Code Coordination.

The City may adopt separate energy conservation standards consistent with applicable state law and energy code requirements. Any local energy amendments shall be coordinated with applicable state agencies and adopted by ordinance.

(m) Savings and Transition.

Applications submitted and deemed complete prior to the effective date of newly adopted codes or amendments may proceed under the previously adopted codes for the period authorized by ordinance.

(n) Authority.

This section is adopted pursuant to the authority granted by the Texas Local Government Code and other applicable state law.

(o) Prior Ordinances.

All ordinances or portions of ordinances in conflict with this section are hereby repealed to the extent of such conflict.

Sec 3.107 Plumbing Code

(a) This section contains the plumbing code for the city.

(1) The purpose and intent of this section is to regulate the construction, erection, and enlargement, alteration or repair of all fittings, fixtures, etc., used for conduction of water and wastewater in, on, or about any premises.

(2) The 2021 International Plumbing Code, and the 2021 International Private Sewage Disposal Code, including all appendices, except Appendix A "Plumbing Permit Fee Schedule" of the 2021 International Plumbing Code, are hereby adopted as part of this article, except as amended by this section.

(3) All connections to the city's water supply system shall meet the requirements of the city's ordinance for the control of backflow and cross connections, as amended from time to time. Required testing of all systems or devices shall be documented on a form approved by the city.

(4) Effective, March 1, 2013, all new structures utilized for human habitation or occupancy that are not utilizing a water well at the time of permitting shall connect to a city water supply if such supply is within 300 feet as measured within street ROW or a utility

easement from the water supply to the nearest property line on which the structure is to be located. Afterwards, the use of any other water supply source, except for non-domestic use of harvested rainwater, shall be prohibited for any purpose.

(5) Once a structure is occupied for human habitation and is connected to a city water supply, it shall not be disconnected.

(b) Amendments to the 2021 International Plumbing Code. The following provisions shall be included as cumulative and additional local requirements.

(1) All exterior cleanout caps installed at grade in both commercial and residential applications shall be of the threaded type (Chapter 7 Sanitary Drainage, Section 708.1.6 Cleanout plugs).

(2) Grinder pumps shall be in accordance with the city standard drawings for grinder pumps (Chapter 7 Sanitary Drainage, Section 712.4 Sewage pumps and sewage ejectors).

(3) Public water supply shall be determined to be available if the city water supply is within 300 feet as measured within a street ROW or a utility easement from the water supply to the nearest property line on which the structure is to be located (Chapter 6 Water Supply and Distribution, Section 602.3 Individual water supply).

(Ord. 18-11-01-02 on 11/1/2018; Ord. 24-01-04-05 on 1/4/2024)

Sec 3.108 Electrical Code

This section contains the electrical code for the city.

(a) The 2023 National Electrical Code (NFPA 70) including all appendices is hereby adopted as part of this article, except as specifically amended in this section.

(b) No aluminum wiring shall be used within any structure. Aluminum wire may be used outside a building for service, provided it is one size larger than the required size for copper.

(c) All wiring and all electrical work within the city shall be performed by a person holding a license issued from the state department of licensing and regulations and shall be registered with the city.

Exception: A homeowner performing electrical work on his residence, and having ownership thereof, and after obtaining a homeowner's permit from the city, and paying all permit fees, may do his own work.

(d) No wire smaller than #12 copper shall be used.

Exception: #14 copper may be used above the switch leg to feed a maximum of 3 lights.

(e) A maximum of 12 outlets shall be allowed on a #12 wiring circuit.

(f) All wiring installed in air-ventilation ducts shall be plenum rated.

(g) Kitchen islands and peninsulas shall have outlets spaced a maximum of four (4) feet apart measured along the length of the countertop.

(h) All buildings where wiring is installed shall have an outside main disconnect readily accessible to the fire department. All commercial buildings and multifamily dwellings shall have the building address and suite or apartment number permanently marked on each disconnect.

(i) All wiring rated at 120 volts or more and all secondary, device-control wiring installed in commercial buildings shall be in conduit. All wiring installed in plenums shall be installed in metallic, flexible metal, or high-density polyethylene conduit.

(j) Application for Permit. The application for a permit required in this subsection shall describe the work to be done and shall be made in writing by a person holding the proper electrician's license. The permit when issued shall be issued to such applicant to cover such work as described and detailed. Any changes or additions must be covered by additional permits at the time changes are made. The application shall be accompanied by such plans, specifications and schedules as may be necessary to determine whether or not the installation as described will be in conformity with the requirements of this article.

(k) Submitting Plans and Specifications; Criteria for Issuance of Permit.

(1) Plans and Specifications. With each application for an electrical permit, when required by the building official for enforcement of this article, two sets of plans and specifications shall be submitted. The building official may require that such plans and specifications be prepared and designed by and bear the seal of a registered professional electrical engineer licensed by the state to practice as such.

(2) Issuance Criteria.

(A) The application, plans and specifications filed by an applicant for an electrical permit shall be checked by the building official. Such plans may be reviewed by other departments of the city to check compliance with laws and ordinances under their jurisdiction. If the building official or his/her designee is satisfied that the work described in an application for the permit and the plans filed therewith conform to the requirements of this article and other pertinent laws and ordinances, he shall issue a permit therefor to the applicant.

(B) When the building official or his/her designee issues the permit, he shall endorse in writing or stamp on both sets of plans and specifications, "approved."

(C) The building official or his/her designee may issue an electrical permit covering part of a building or structure before the entire plans and specifications for the whole building or structure have been submitted or approved, provided adequate information and detailed statements have been made complying with all pertinent requirements of this article. The holder of such permit may proceed without assurance that the permit covering the work in the entire building or structure will be granted.

(l) Issuance and Display of Permit.

(1) Plans, specifications and schedule shall not be submitted and will not be examined under this article, unless the plans, specifications and schedule are submitted by the holder of the proper electrician's license or electrical sign contractor's license. If it is found that the installation as described will in general conform to the requirements of this section and if the applicant has complied with all provisions of this article and all applicable ordinances of the city, a permit for such installation shall be issued.

(2) On all new construction, the permit for electrical work shall be displayed in a readily accessible location, or as directed by the building official, throughout the time such installation, as is covered by the permit, is being installed.

(m) Effect of Issuance and Display of Permit.

(1) The issuing or granting of an electrical permit or approval of plans and specifications shall not be construed to be a permit for or an approval of any violation of any of the provisions of this article or any other ordinance. No permit presuming to give authority to violate or cancel the provisions of this article shall be valid, except insofar as the work or use which it authorizes is lawful.

(2) The issuance of a permit based upon plans and specifications shall not prevent the building official from thereafter requiring the correction of errors in plans and specifications or from preventing building operations from being carried on thereunder when in violation of this article or any other ordinance of the city pertaining thereto.

(n) Lapse of Permit. Every permit issued by the building official under this section shall expire by limitation and become null and void if the building or work authorized by such permit is not commenced within 180 days from the date of such permit or if the building or work authorized by permit is suspended or abandoned at any time after the work is commenced for a period of 60 days. Before such work can be recommenced, a new permit shall be first obtained to do so, and the fee shall be one-half the amount required for a new permit for such work, provided no changes have been made or will be made in the original plans and specifications for such work and provided, further, that such suspension or abandonment has not exceeded one year.

(o) Remedying Dangerous or Unsafe Conditions. Where wires or apparatus are found in a dangerous or unsafe condition or are deemed to be an interference with the work of the fire department, the building official or his/her designee shall notify the person owning, using or operating them to place them in a safe, secure and noninterfering condition. Any person failing, neglecting or refusing within a reasonable time to make the necessary repairs or changes and have the necessary work completed within a reasonable time after the receipt of the notice shall be deemed guilty of violation of this article, and every day which shall elapse after the expiration of the reasonable time until the wires and

apparatus are repaired, removed or changed as required by the building official or his/her designee or fire marshal may be considered a separate offense within the intent and meaning of this article.

(p) Turning Off Current by Fire Chief or Building Official or His/Her Designee. The chief of the fire department or the building official or his/her designee or a competent person delegated by them or either of them shall have the power to at once cause the removal of all wires or the turning off of all electric current where the circuits interfere with the work of the fire department during the progress of a fire. The building official or his/her designee is hereby authorized and empowered to cause the turning off of electric current from all conductors or apparatus which are deemed by him to be an unsafe condition or which have not been installed in conformity with this article.

(Ord. 18-11-01-02 on 11/1/2018; Ord. 24-01-04-05 on 1/4/2024; Ord. 24-04-04-04 on 4/4/2024)

Sec 3.109 Mechanical, Fuel Gas Code, and Energy Efficiency

(a) This subsection contains the mechanical code of the city.

(1) The purpose and intent of this section is to provide certain minimum standards, provisions, and requirements for safe and suitable design, material and methods of installation, construction, alteration, movement, maintenance, or repair of heating, air-conditioning and refrigeration units in the city.

(2) The 2021 International Mechanical Code and all appendices, except Appendix B "Recommended Permit Fee Schedule," are hereby adopted as part of this section.

(b) This subsection contains the fuel gas code of the city.

(1) The purpose and intent of this section is to provide certain minimum standards, provisions, requirements and methods of fuel and gas infrastructure in the city.

(2) The 2021 International Fuel Gas Code and all appendices are hereby adopted except for the following sections which are excluded in their entirety:

(A) Section 106.5.3 Expiration (Chapter 1 Scope and Administration, Section 106 Permits);

(B) Section 106.5.4 Extensions (Chapter 1 Scope and Administration, Section 106 Permits); and

(C) Section 109 Means of Appeal (Chapter 1 Scope and Administration).

(c) This subsection contains the energy conservation code of the city.

(1) The purpose and intent of this section is to provide certain minimum standards, provisions, requirements, and methods to reduce energy consumption in the city.

(2) The 2021 International Energy Conservation Code and all appendices are hereby adopted in its entirety.

(Ordinance O-31-14 adopted 12/18/14; Ord. 18-11-01-02 on 11/1/2018; Ord. 24-01-04-05 on 1/4/2024; Ord. 24-04-04-04 on 4/4/2024)

Sec 3.110 Permits and Approvals

Permits shall only be obtained under the following rules and regulations.

(a) Work Requiring Approval and/or Permit.

(1) It is unlawful for any person or entity to erect, construct, enlarge, alter, perform repairs, move, improve, remove, convert, demolish any building, structure, or manufactured home, or to install plumbing, electrical, mechanical, or irrigation systems governed by the aforementioned codes or state statutes, without first obtaining a city permit. An owner may make minor improvements and repairs on any structure without a permit provided such improvements and repairs are not regulated by this section or other ordinances and/or building codes. An owner planning such improvements and/or repairs shall first contact the city to determine in each instance whether or not a permit is required. The city manager, the building official, a building inspector, or their designee shall have the right to inspect all such improvements and/or repairs.

(2) Grading/Site Development. Fill dirt may be removed from or added to an area within the city, and grading or site development (including removal of any trees other than ashe junipers) without a permit may occur only upon approval of the city manager or their designee in accordance with this article and/or the site development regulations. Grading plans signed and sealed by an engineer registered in the state may be required to be submitted to the city prior to obtaining such approval. Generally, no one shall be permitted to deliberately alter the topographic conditions of a lot or parcel of land in any way that would permit additional quantities of water from any source, other than what nature originally intended to flow from his property onto any adjoining property or to concentrate runoff that would cause erosion. Upon consultation and approval of the city, the owner shall direct, through the grading of the property and/or the construction of drainage facilities, drainage runoff to the nearest drainage culvert, public right-of-way with a roadside ditch, drainage easement or natural drainageway.

(b) On-Site Sewage Facility (OSSF) Approval. Before a city building permit of any type will be issued for any construction on an unimproved lot requiring an OSSF, a permit to construct a private sewage facility from all applicable governing agencies (including the city or LCRA) must accompany the plans and specifications. A private sewage operating license must be presented to the city prior to scheduling an inspection for a certificate of occupancy on new construction.

(c) Application Procedures To obtain a permit, the applicant shall file an application on a form provided by the city with the city as provided hereinafter along with the required fee and shall:

(1) Request a utility extension cost estimate:

(A) Upon receipt of a building permit application for a residential dwelling or commercial structure the city manager or their designee will initiate the

preparation of a utility extension estimate for water and sewer service for the purpose of determining the availability and cost of extending water and/or sewer service to the property described in the permit application;

(B) The cost of preparing the estimate shall be assessed to the individual or entity submitting the application at the time the application is submitted. The fee to be assessed for the estimate shall be based on the city fee schedule, unless unusual circumstances are encountered requiring professional engineering review by the city, in which case the fee shall be determined by the city manager, or their designee based upon the actual cost of preparation plus an administrative charge designed to recover any and all costs incurred by the city for preparation of the estimate;

(C) The estimate requirement may be waived by the city at the discretion of the city manager or their designee on the following basis:

(i) A current and accurate estimate exists for the extension of water and/or sewer service to the property;

(ii) The applicant provides a written affidavit to the city that water and/or wastewater services will be provided to the property by other means approved by the city manager or their designee.

(2) Submit the application with a set of appropriately scaled plans, specifications, and other documents as may be required in a digital format approved in advance by the building official, including but not limited to the items described in subsections (d) and (e) below;

(3) Identify and describe the work to be covered by the permit for which application is made;

(4) Describe the site on which the proposed work is to be done by lot, section, street address, or similar description that will readily and definitively identify and locate the proposed work;

(5) Indicate the use or occupancy for which the proposed work is intended;

(6) Be signed by the applicant or his authorized agent (see Section 3.111 below) who may be required to submit evidence to indicate such authority;

(7) Give supplemental information as reasonably may be required by the city after preliminary review of the application and plans; and

(8) Submit a statement by the owner or the owner's representative as to whether or not the property is within the one-percent annual chance floodplain.

(9) All other requirements as deemed necessary in the Development Procedure Manual as amended from time to time.

(d) Site Plans.

(1) Single-Family and Two-Family Residences. All applications for single-family or two-family residential building permits shall be accompanied by a an appropriately scaled site plan in a digital format approved in advance by the building official. The site plan shall include but not be limited to the following:

(A) A legal description of the land included on the site plan and the addresses and telephone numbers of the owner, registered contractor, and the designer or

architect;

(B) The municipal address of the property, amended as required with Travis County 911 Addressing to ensure consistency with the location of the designated front yard (see Chapter 14);

(C) Natural drainage features such as watercourses, springs, and ponds;

(D) Location and dimensions of easements and setbacks as described in subdivision plats, restrictive covenants, and all applicable local ordinances;

(E) Floodplain elevations if the lot is subject to inundation by the one-percent annual chance storm. If the building foundation is within the floodplain, the following procedure will apply:

(i) Prior to obtaining a building permit, the applicant shall furnish the city an elevation certificate and a letter from an architect, professional engineer or surveyor, stating that an elevation control point (temporary benchmark) has been established on the property, and indicate the elevation of the temporary benchmark, along with the floodplain elevation.

(ii) Immediately upon completion of the first habitable floor level, the applicant shall return a properly completed FEMA elevation certificate certifying that the first habitable floor elevation is one (1) foot above the base flood elevation (BFE) (the elevation inundated by the one-percent annual chance storm).

(iii) Any other information required by the city flood damage prevention ordinance, including the location of proposed walks, driveways and culverts.

(F) The shape, size, and location of all buildings, including roof overhangs, decks, or other structures to be erected, altered, or moved, and of any buildings or other structures already on the lot.

(G) The site plan shall address the drainage patterns that affect the lot or any other lots or properties that may be adversely affected by the development of the lot. Storm water leaving a site shall be directed to a roadside ditch or to a defined drainage ditch within a dedicated drainage easement. The site plan shall verify that the runoff will not drain uncontrolled onto a downstream adjacent property. The site plan shall determine and show the drainage patterns coming onto the lot and leaving the lot. The drainage patterns shall be determined for an area that includes at least two lots in addition to the subject property including the depth of two lots across the street, two lots on either side, and two lots behind the lot being developed. The drainage patterns of the roadside ditch including existing and proposed drainage culverts, shall be determined, and shown on the site plan. The city manager or their designee may require a drainage study prepared by a registered professional civil engineer with calculations for approval to ensure that there will be no adverse drainage or runoff impacts created by proposed grading or topographic changes, and constructed improvements.

(H) A protected tree survey prepared by a registered professional land surveyor and a landscape plan in accordance with the city landscape and tree preservation ordinance. The landscape plan shall show which trees will be removed along with the trees and shrubs required for compliance with all applicable requirements.

(I) An irrigation plan, if such is proposed, which requires a separate permit application and fee.

(2) All other requirements as deemed necessary in the Development Procedure Manual as amended from time to time.

(3) Multifamily, Commercial and Other Development. In addition to the requirements above for a single-family or two-family residence, site plans for all other development shall be in accordance with the city's site development plan and design review ordinances as amended from time to time (see Chapter 3.5 and Section 6.105 of Chapter 14). Required site development plan and design approvals shall be secured prior to the issuance of any individual building permits.

(e) Construction Plans and Specifications. For all contemplated construction on the site, appropriately scaled plans in a digital format approved in advance by the building official shall be provided to the city and such plans shall include at least the following information:

(1) Scaled floor plan of each floor and the basement, if any, for each building;

(2) Plan of all attached decks, porches, covered walkways, attached garage or carport and all other structures as herein defined;

(3) Plan shall provide the total square footage of both subsections (e),(1) and (e),(2) above;

(4) Location of all permanently installed structures and equipment, such as closets, storage, plumbing, fixtures, appliances, etc.;

(5) Location and symbols of all electrical equipment, including switches, outlets, fixtures, etc.;

(6) Exterior elevations:

(A) All exterior elevations;

(B) Wall and roof finish materials;

(C) Dimensions of overhang;

(D) Finished floor elevations of the lowest floor and the maximum elevation of the roof ridge as related to the highest existing natural grade elevation on the property, with that highest existing natural grade elevation being identified on a topographic map or survey of the lot signed by a registered professional land surveyor;

(7) Structural section:

(A) Cross section of typical wall construction details;

(B) Scaled plan of the foundation with sections of typical beams, footings, and

girders designed and sealed by a registered professional engineer;

(C) Copy of specifications.

(8) An energy compliance certificate (REScheck or COMcheck as applicable).

(9) A schedule of all outdoor light fixtures and controls, including the manufacturer, model number and lamp specification (including color corrected temperature) of each fixture.

(10) All other requirements as deemed necessary in the Development Procedure Manual as amended from time to time.

(f) Permit Issuance.

(1) If the work described in an application for a building permit conform to the requirements of this section and other applicable ordinances, the city shall notify the applicant by email of the successful reviews, subject to minor corrections, if necessary.

(A) The applicant must pay all applicable fees and sign the issued permit within ninety (90) days of notification by email of the successful review, or the approval expires, and a new application and local review is required.

(B) Applications required by the expiration of a review approval submitted within one (1) year of the original approval notification shall require a local review fee that is twice the amount specified in the fee schedule.

(C) Applications, including those that have previously obtained expired approvals, shall be reviewed under the ordinances, building codes, and fire codes applicable at the time the new application is determined to be complete.

(2) Building permit issuance does not include permission to install fences, swimming pools, irrigation systems, plumbing, electrical and/or mechanical systems, etc. Separate permits are required for fences, swimming pools, irrigation systems, and other similar improvements. Separate permit fees and review of credentials required by the Texas Department of Licensing and Regulations are a prerequisite for the installation of plumbing, electrical and/or mechanical systems in a principal building for which a permit has already been issued.

(3) Only state-licensed master plumbers, electricians, and state-licensed mechanical contractors or those designated in writing to the city by the master may be issued permits after or concurrent with the issuance of a building permit to an owner or registered contractor.

(4) All plumbing, electrical and mechanical applicants are required to register with the city and provide the city with a copy of their valid state license. See Section 3.111 of Chapter 3 below.

(5) Prior to the formal issuance of a building permit, the applicant shall be informed by email of a successful review, subject to any conditions or corrections specified in that approval. A copy of that review is stored in the digital project file and remains accessible to the applicant. Such approved plans, documents, and specifications shall not be changed, modified, or altered without authorization from the city being

included in the digital project file. All work shall be done in accordance with the approved plans as modified.

(g) Retention of Plans. One set of approved plans, documents, and specifications shall be retained by the city and stored on the permitting website maintained by a third-party vendor, accessible using the credentials established when the application was originally submitted. All other requests for permit documents shall require an open records request through the City Secretary and include a review by the City Attorney.

(h) Validity. The issuance or granting of a permit, or approval of plans and specifications, shall not be construed to be authority for, or an approval of, any violation of any of the provisions of this section or any other city ordinance. No permit purporting to give authority, to violate or cancel the provisions of this section, shall be valid, except insofar as the work or use which it authorized is lawful and conforms to the requirements of this section or variance or modification granted pursuant to this article. The issuance of a permit based upon plans and specifications shall not prevent the city manager or their designee from thereafter requiring a correction of errors in said plans and specifications or from preventing building operations being carried on hereunder when in violation of this article or of any other ordinance of the city.

(i) Representations by Applicant. All representations, whether oral or written, made by the applicant or his agent in support of an application for any permit under this article become conditions upon which such permit is issued. It shall be unlawful for any applicant to vary from such representations without first applying to amend the permit and receiving approval by the city. Amendments to the approved permit documents shall require the review and processing fee established by the fee schedule.

(j) Permit Fees.

(1) The city has established fees to cover the costs of applications, plan review, inspections and other expenses incurred by the city in the administration of this article. Where work for which a permit is required by this article is commenced prior to obtaining a required permit, the fees specified in the schedule shall be doubled. The payment of such a double fee shall not relieve any person from fully complying with the requirements of this article in the execution of the work nor from any other penalties prescribed herein. The applicant will be required to comply with all ordinances.

(2) In the event an applicant withdraws his application submission or does not construct under the issued permit, and has paid a plan review and permit fee, at the request of the applicant the city will refund the building permit fee less fifty (50) percent of the fee to cover the cost of administrative expenses incurred as a result of the submission. When a separate plan review component is established by the schedule of fees contained elsewhere herein, no portion of that plan review fee shall be returned, even if the plan review has not been completed. When the schedule of fees does not include a separate review and permit fee, no portion of the fee shall be refunded.

(3) In the event the application and/or plans submitted for a building permit do not meet requirements and is rejected by the city for any reason the city shall not refund any portion of the fee that is designated for plan reviews.

(4) The city may allow for the transference or credit of fees collected for a permit to a different party who might desire to exercise any portion of those same rights on the same property. However, the right to use any existing permit documents shall require authorization from the individual or entity that provided them, subject to the review of the City Attorney.

(5) Re-inspections required as the result of incomplete or deficient work that does not otherwise meet the provisions below shall result in additional fees assessed in accordance with the schedule contained in Appendix A.

(6) Site visits required to investigate, or document verified violations of any provision of any applicable chapter, specifically including any regulations intended to minimize the disturbance to adjacent property owners shall be assessed at the rate established for second or subsequent re-inspections. Such fees shall be assessed against the primary building permit, regardless of whether the violation was committed by any sub-contractor, including those that might be required to take out concurrent permits as specified above.

(k) Expirations, Extensions, Renewals, Suspensions and Revocations.

(1) Building and subcontractor permits issued under the provisions of this chapter are valid until such time as the work authorized by that permit has been satisfactorily completed in accordance with all applicable requirements, as evidenced by a Certificate of Occupancy (not a temporary Certificate of Occupancy), or for a period as follows:

(2) Miscellaneous or accessory structure permits — six (6) months from the date of approval;

(3) Residential or site work permits:

(A) five thousand (5,000) square feet in area and below — eighteen (18) months from the date of approval; and

(B) greater than five thousand (5,000) square feet in area — twenty-four (24) months from the date of approval.

(4) Multifamily and nonresidential permits:

(A) five thousand (5,000) square feet in area and below —eighteen (18) months from the date of approval; and

(B) greater than five thousand (5,000) square feet in area — twenty-four (24) months from the date of approval.

(l) The city manager or their designee may upon written notice, suspend or revoke a permit issued under the provisions of this section whenever the permit is issued in error, is based on incorrect information, or for violations of the provisions of this chapter or any other city ordinance subject to applicable permit fees as identified in Appendix A, Section 3.100 Building Permit Fees. Permits issued under the provisions of this article shall expire and become null and void, with all permit and review fees forfeited in accordance with subsection (j) above if the work authorized by such permit is not commenced within ninety (90) days from the date of approval, with the exception of a documented hardship as required by the city building official. For additional requirements see subsection (f) Permit Issuance above. Permits shall also expire and become null and void, with all permit and review fees forfeited if the work authorized by such permit is suspended or abandoned for a period of two (2)

months at any time after the work has originally commenced, with the exception of a documented hardship. Where work has stopped or been abandoned, and/or the permit has been revoked or become null and void the unfinished work shall be deemed a violation of both the building and property maintenance regulations for which the permit holder and/or the property owner shall be held responsible. Projects that have been partially completed and inspected in accordance with all applicable provisions of this article are eligible for completion pursuant to an approved new permit application and payment of fees in accordance with the schedule. See subsection (4) below for requirements related to work that has been completed without documented inspections required by this article or the applicable adopted International Code Council (ICC).

(1) Subject to consistent progress or documented hardship, the permit holder may apply for extensions to the time limits specified above. Pursuant to the payment of a fee in an amount equal to the original permit fee or the scheduled renewal fee, whichever is greater, the building official may authorize a six (6) month extension to satisfactorily complete the work. Extension fees shall not include any portion of the permit fee specifically identifiable as a review fee. Permit renewal fees will be charged as described below.

Building Permit Renewal	$750.00

(4) The building official may authorize additional extensions in six month increments up to a maximum time limit of thirty-six (36) months past the original to complete the work as defined above.

(5) Any permit that has not resulted in a Certificate of Occupancy within the required deadline after issuance specified above shall be considered permanently revoked. If applicable, the code enforcement authority shall pursue all appropriate remedies applicable to dangerous or unsafe structures and property. After a permit has been permanently revoked, a new application, fee and review is required, along with an updated set of documents that completely and accurately reflect the current state of completion. Work that has been completed without documented inspections shall be subject to demolition. In addition, the approval of the City Council is required and shall be based only the basis of extraordinary hardship or circumstances. In accordance with Section 3.121 below, the City Council has the authority to require a performance bond as a prerequisite for a new permit approval.

(m) Setback and Height Verification. A form survey, prepared by a state-registered professional land surveyor, is required for any new principal building, any accessory buildings over one hundred and twenty (120) square feet, additions to any principal or accessory buildings, swimming pools, and decks if the plans submitted indicate it will be closer than ten (10) feet to any building setback or property line. When applicable, the form survey shall be provided as a condition of the first required inspection. See Section 3.112 below. The form survey shall include the elevation of the top of each level of the forms in addition to an indication of the distance between all relevant improvements and the nearest property line or dedicated easement.

(Ordinance O-02-15 adopted 1/15/15; Ord. 20-10-01-02 on 10/1/2020; Ord. 24-01-04-06 on 1/4/2024)

Administrative And Local Amendments To Adopted Construction Codes

Section 1. Purpose And Applicability

These Administrative And Local Amendments Shall Apply In Conjunction With:

- The City Code Of Ordinances;
- Chapter 3.5 Site Development Regulations;
- Chapter 14 Zoning Regulations;
- The Technical Construction Standard Specifications (Tcss);
- The Administrative Policies And Procedures Manual;
- The Design And Construction Standards Manual;
- Appendix B – Local Design Criteria;
- Floodplain Regulations;
- Utility Standards; And
- All Other Applicable Federal, State, And Local Laws.

Section 2. Administrative Amendments

2.0 Excluded Appendices And Provisions

The Following Appendices And Provisions Of The Adopted Construction Codes Are Excluded Unless Specifically Adopted Elsewhere By Ordinance:
(A) Appendix A "Employee Qualifications," Appendix B "Board Of Appeals," Appendix D "Fire Districts," Appendix H "Signs," Appendix J "Grading," And Appendix K "Administrative Provisions" Of The International Building Code;
(B) Appendix L "Permit Fees" Of The International Residential Code;
(C) Appendix A "Board Of Appeals" Of The International Fire Code; And
(D) Section R313.2 "One- And Two-Family Dwelling Automatic Fire Sprinkler Systems" Of The International Residential Code.
Where Administrative Procedures, Permit Expiration Requirements, Appeals Procedures, Grading Standards, Or Fee Schedules Are Addressed By Local Ordinance, Those Local Provisions Shall Control.

2.1 Permit Expiration

(A) Miscellaneous And Accessory Structures. Six (6) Months From Issuance.
(B) Residential And Site Development Permits.

1. Five Thousand (5,000) Square Feet Or Less:
   - Eighteen (18) Months From Issuance.
2. Greater Than Five Thousand (5,000) Square Feet:
   - Twenty-Four (24) Months From Issuance.

(C) Multifamily And Nonresidential Permits.

1. Five Thousand (5,000) Square Feet Or Less:
   - Eighteen (18) Months From Issuance.
2. Greater Than Five Thousand (5,000) Square Feet:
   - Twenty-Four (24) Months From Issuance.

2.2 Permit Extensions And Renewals

The Building Official May Authorize Six (6) Month Extensions Upon:

- Demonstrated Progress;
- Payment Of Applicable Fees; And
- Documentation Of Hardship Or Reasonable Cause.

No Permit Shall Remain Active For More Than Thirty-Six (36) Months Unless Otherwise Authorized By The Building And Standards Commission.
Procedures May Be Supplemented By The Administrative Policies And Procedures Manual.

2.3 Work Without Required Inspections

The City May Require:

- Engineering Evaluation;
- Exposure Of Concealed Work;
- Testing;
- Reconstruction;
- Corrective Action; Or
- Removal Of Noncompliant Work

As Necessary To Verify Compliance.

2.4 Exterior Maintenance And Construction Activities

No Structure Shall Be Maintained Within The City Without Exterior Finishes, Coatings, Or Coverings Sufficient To Protect The Structure From Deterioration And Exposure To The Elements.
Temporary Storage Of Building Materials And Construction Equipment Shall Be Limited To Active Construction Sites And Shall Remain Within The Boundaries Of The Permitted Property Unless Otherwise Authorized.

2.5 Address Identification

All Principal Structures Shall Display Reflective Address Numbers Visible From The Public Right-Of-Way.
Address Numbers Shall:

- Contrast With The Background;
- Be Permanently Affixed;
- Remain Unobstructed; And
- Comply With Minimum Size Requirements Established By The Fire Code Official.

2.6 Digital Submittals

All Plans, Permits, Inspection Records, And Revisions Shall Be Submitted In Digital Format Approved By The Building Official. Administrative Procedures May Be Established Within The Administrative Policies And Procedures Manual.

Section 3. Water, Plumbing, And Site Development Amendments

3.0 Municipal Water Service

Where Municipal Water Service Is Available And Accessible Pursuant To City Utility Regulations, New Structures Intended For Human Habitation Shall Connect To The Municipal Water System Unless Otherwise Approved By The City.
Backflow Prevention Devices, Cross-Connection Controls, Grinder Pump Systems, And Related Utility Infrastructure Shall Comply With City Standards, Utility Specifications, And The Design And Construction Standards Manual.

3.1 Exterior Cleanouts

All Exterior Sanitary Sewer Cleanout Caps Installed At Grade Shall Be Of The Threaded Type.

Section 4. Drainage And Site Development Amendments

4.1 Drainage Protection

Development Shall Not Alter Drainage Patterns In A Manner That Creates Adverse Impacts To Adjacent Property, Public Infrastructure, Easements, Or Drainageways.
Additional Technical Criteria May Be Established Within The Design And Construction Standards Manual.

4.2 Drainage Studies

The Building Official Or City Engineer May Require Drainage Studies Prepared By A Registered Professional Engineer.

Drainage Studies Shall Comply With The Design And Construction Standards Manual.

4.3 Erosion And Sediment Control

Temporary And Permanent Erosion Control Measures Shall Be Installed And Maintained During Construction.
Approved Best Management Practices May Be Established Within The Design And Construction Standards Manual.

Section 5. Fire Access And Emergency Access

5.1 Fire Apparatus Access Roads

Fire Apparatus Access Roads Shall Comply With The International Fire Code And Locally Adopted Amendments.
Detailed Fire Access Criteria May Be Established Within The Design And Construction Standards Manual.

5.2 Driveway Grades

Driveways Serving Structures Requiring Fire Department Access Shall Comply With Maximum Grades Established By The Fire Code Official.

5.3 Reflective Addressing

All Principal Structures Shall Display Reflective Address Numbers Visible From The Public Right-Of-Way.

Section 6. Wildland-Urban Interface (Wui) Standards

6.1 Applicability

Wildland-Urban Interface Standards May Apply Only Within Officially Designated Wui Overlay Areas Adopted By Ordinance.

6.2 Ignition-Resistant Construction

Structures Within Designated Wui Areas May Be Required To Incorporate:

- Class A Roofing;
- Ember-Resistant Venting;
- Enclosed Eaves And Soffits;
- Ignition-Resistant Exterior Materials; And
- Defensible Space Standards.

Detailed Wildfire Mitigation Requirements May Be Established Within The Design And Construction Standards Manual.

Section 7. Foundation And Retaining Wall Requirements

7.1 Engineered Foundations

The Building Official May Require Engineered Foundations Where:

- Slopes Are Excessive;
- Soil Conditions Warrant;
- Retaining Systems Are Proposed; Or
- Structural Stability May Be Affected.

7.2 Retaining Walls

Retaining Walls Exceeding Four (4) Feet In Height Or Supporting Surcharge Loads Shall Require Engineered Design.

Section 8. Floodplain Coordination

Issuance Of A Permit Does Not Waive Compliance With:

- Fema Regulations;

- Floodplain Management Regulations;
- Drainage Standards;
- Engineering Criteria; Or
- Subdivision Regulations.

Section 9. Swimming Pools And Water Features

Swimming Pools And Aquatic Facilities Shall Comply With:

- The International Swimming Pool And Spa Code;
- Barrier Requirements;
- Drainage Standards; And
- All Applicable Safety Standards.

Additional Technical Requirements May Be Established Within The Design And Construction Standards Manual.

Section 10. Electrical And Mechanical Requirements

10.1 Electrical Contractor Registration

All Electrical Work Regulated By This Article Shall Be Performed By Individuals Or Contractors Licensed By The State Of Texas And Registered With The City Where Required.

10.2 Exterior Disconnects

All Structures Shall Maintain Exterior Electrical Disconnects Readily Accessible To Emergency Personnel In Accordance With The National Electrical Code And Local Amendments. Commercial And Multifamily Structures Shall Permanently Label Disconnects With The Applicable Building Address And Suite Or Unit Designation.

10.3 Plenum Wiring

All Wiring Installed In Environmental Air Plenums Shall Comply With Applicable Plenum-Rating Requirements Of The National Electrical Code.

10.4 Fuel Gas And Mechanical Systems

Mechanical And Fuel Gas Systems Shall Comply With All Adopted Codes, City Standards, Manufacturer Specifications, And Applicable Inspection Requirements.
Additional Installation Standards And Administrative Procedures May Be Established Within The Administrative Policies And Procedures Manual And The Design And Construction Standards Manual.

Section 11. Local Design Criteria

Local Design Criteria Table

Design Criteria	**Requirement / Standard**	**Notes**
Ground Snow Load	0 Psf	Regional Climatic Conditions
Ultimate Wind Speed (Vult)	115 Mph	Irc/Ibc Risk Category Ii
Wind Exposure	Exposure C Unless Otherwise Approved	Open Terrain And Ridge Exposure
Seismic Design Category	Category B	Subject To Site-Specific Engineering
Frost Depth	6 Inches Minimum	Local Standard
Weathering Probability	Severe	Limestone And Climate Exposure

Termite Infestation Probability	Heavy	Per Irc Regional Mapping
Decay Probability	Moderate To Severe	Humidity And Exposure Conditions
Winter Design Temperature	26°F	Regional Climatic Data
Air Freezing Index	0	Regional Climatic Conditions
Mean Annual Temperature	68°F	Approximate Regional Average
Rainfall Intensity	Current Noaa Atlas 14 Data	Required For Drainage Calculations
Flood Hazard Reference	Current Fema Firm And Flood Insurance Study	Plus Local Floodplain Regulations
Minimum Finished Floor Elevation	1 Foot Above Bfe	Where Applicable
Topographic Conditions	Site-Specific Review Required On Steep Slopes	Hill Country Terrain Conditions
Slope Stability Analysis	May Be Required	Excessive Grading Or Unstable Soils
Retaining Wall Engineering Threshold	Greater Than 4 Feet	Engineered Design Required
Driveway Grade	15% Maximum Sustained Grade Unless Approved Otherwise	Subject To Fire Code Official Review
Emergency Access Requirements	Subject To Ifc And Local Amendments	Fire Access Roads And Long Driveways
Wildland-Urban Interface Exposure	Subject To Mapped Wui Overlays	Additional Wildfire Mitigation May Apply
Erosion Control Requirements	Required During Construction	Temporary And Permanent Bmps Required
Drainage Requirements	No Adverse Downstream Impacts Permitted	Positive Drainage Required
Geotechnical Investigation	May Be Required	Based On Slope Or Soil Conditions
Exterior Addressing	Reflective And Visible From Row	Emergency Response Standards

Code	Current Status	Proposed Action	What the Code Regulates	Major Areas of Regulation	Major Operational Impacts	Major Differences / Modernization Trends	Key Policy or Enforcement Considerations
2021 International Residential Code (IRC)	Adopted	Remain Adopted	Regulates detached one-family dwellings, two-family dwellings, and townhouses not more than three stories in height. Establishes minimum standards for residential structural safety, life safety, sanitation, energy efficiency, ventilation, fire protection, and residential systems.	Foundations, framing, structural loading, roofing systems, wall bracing, stair geometry, handrails, guards, emergency escape openings, smoke alarms, carbon monoxide alarms, attic ventilation, crawlspaces, insulation, mechanical systems, plumbing systems, fuel gas systems, fireplaces, chimneys, decks, balconies, accessory structures, garage separation, weather protection, moisture barriers, and portions of residential energy compliance.	Significantly increases plan review and inspection complexity compared to older code cycles. Requires coordination between building, mechanical, plumbing, and energy inspections. Modern code enforcement increasingly requires blower door testing, duct testing, engineering review, and manufacturer specification verification.	2021 IRC places significantly greater emphasis on energy efficiency, air sealing, structural resiliency, and life-safety systems than older editions. Includes expanded deck safety requirements, updated wall bracing standards, modernized wind design maps, improved fireblocking requirements, expanded ventilation requirements, and stricter insulation standards. Modern homes are now substantially tighter and more mechanically dependent than under prior code cycles.	More airtight homes can create moisture, humidity, and indoor air quality concerns if ventilation systems are improperly installed or sized. Builder education becomes increasingly important due to growing complexity. Enforcement consistency may become difficult without internal SOPs and standardized inspection procedures. Hillside development, drainage impacts, retaining walls, and erosion control still require local engineering and development regulations beyond the IRC itself.
2021 International Building Code (IBC)	Adopted	Remain Adopted	Regulates commercial buildings, multifamily developments outside IRC scope, public buildings, institutional occupancies, industrial occupancies, and mixed-use structures. Establishes minimum standards for structural integrity,	Occupancy classifications, allowable height and area, construction types, structural systems, fire-resistance ratings, fire barriers, means of egress, elevators, accessibility compliance, mixed-use buildings, fire suppression coordination, exiting systems, occupant	Commercial plan review now requires increasingly specialized review processes involving structural engineering, accessibility compliance, fire code coordination, energy review, and multidisciplinary review coordination. Review timelines and consultant involvement generally	2021 IBC modernizes occupancy classifications, expands mass timber provisions, improves accessibility coordination, refines egress standards, and increases coordination with fire, energy, and accessibility codes. Increased emphasis is placed on mixed-use developments, resiliency,	Occupancy classification disputes are one of the most common and consequential issues in commercial code enforcement because occupancy drives parking, fire separation, sprinkler requirements, exiting, and structural thresholds. Existing buildings and redevelopment sites may struggle to comply with

Code	Current Status	Proposed Action	What the Code Regulates	Major Areas of Regulation	Major Operational Impacts	Major Differences / Modernization Trends	Key Policy or Enforcement Considerations
			occupancy classification, accessibility, fire resistance, means of egress, and overall building life safety.	loads, seismic coordination, flood-resistant construction, and structural loading requirements.	increase under modern IBC cycles.	and integrated life-safety systems.	modern standards without IEBC flexibility. Accessibility coordination remains highly technical and legally sensitive due to ADA overlap.
2021 International Fire Code (IFC)	Adopted	Remain Adopted	Regulates fire prevention, hazardous materials, emergency responder access, operational permits, fire protection systems, fire safety maintenance, and operational fire risks. Intended to reduce both structural fire risks and operational hazards.	Fire apparatus access roads, fire lanes, turnarounds, emergency access widths, hydrant placement, fire flow requirements, hazardous material storage, fire suppression systems, alarm systems, operational permits, assembly occupancies, fuel systems, special events, wildfire exposure coordination, and emergency response infrastructure.	Requires substantial coordination between Development Services, Fire, Engineering, and Emergency Services. Fire access standards often directly affect subdivision layout, roadway design, site planning, and development feasibility. Operational permits create ongoing administrative tracking obligations.	Modern IFC cycles place increased emphasis on emergency access, wildfire exposure awareness, operational permitting, and integrated life-safety systems. Significant expansion has occurred regarding hazardous materials regulation, fuel systems, and emergency response coordination.	Hillside terrain, narrow roads, dead-end streets, water supply limitations, and older subdivision layouts may conflict with modern fire access requirements. Existing development patterns may not fully accommodate current emergency response standards. Operational permitting systems require staffing, tracking systems, and interdepartmental coordination.
2021 International Mechanical Code (IMC)	Adopted	Remain Adopted	Regulates commercial HVAC systems, ventilation systems, refrigeration systems, exhaust systems, and mechanical	HVAC systems, ventilation standards, combustion air, duct systems, refrigeration systems, commercial kitchen hoods, exhaust systems, equipment	Mechanical review and inspection requirements have become significantly more technical. Increasing reliance on engineered mechanical systems	Modern IMC cycles increasingly emphasize indoor air quality, energy efficiency, mechanical ventilation, and integration with energy code requirements. Tighter	Improper HVAC sizing, ventilation imbalance, and inadequate moisture control can create long-term operational and habitability issues. Restaurant and STR

Code	Current Status	Proposed Action	What the Code Regulates	Major Areas of Regulation	Major Operational Impacts	Major Differences / Modernization Trends	Key Policy or Enforcement Considerations
			equipment outside residential IRC scope. Intended to ensure indoor air quality, mechanical safety, and proper ventilation.	clearances, rooftop equipment, smoke control systems, and mechanical energy coordination.	requires more detailed plan review and inspection coordination. Commercial kitchen exhaust systems require specialized review and inspection coordination with fire suppression systems.	building envelopes created by modern energy codes make mechanical ventilation substantially more important than under prior code cycles.	growth may increase commercial kitchen and ventilation review complexity. Increased mechanical complexity may require consultant review support or specialized staff training.
2021 International Plumbing Code (IPC)	Adopted	Remain Adopted	Regulates commercial plumbing systems outside IRC scope. Establishes standards for potable water systems, sanitary sewer systems, drainage, venting, fixtures, and plumbing safety.	Water distribution, sanitary drainage, vent systems, grease interceptors, backflow prevention, fixture counts, storm drainage systems, cleanouts, traps, interceptors, water heaters, and plumbing fixture accessibility requirements.	Requires coordination with utility providers, TCEQ regulations, engineering standards, and health standards. Grease interceptor review and enforcement become increasingly important with restaurant growth and tourism activity.	Modern IPC cycles increasingly emphasize water conservation, sanitation protection, backflow prevention, and integrated stormwater coordination. Plumbing systems are increasingly coordinated with accessibility and energy standards.	Utility infrastructure limitations, pressure issues, and on-site sewage constraints may create practical implementation challenges. Grease interceptor maintenance and enforcement remain ongoing operational concerns. Plumbing inspection consistency becomes increasingly important due to system complexity.
2021 International Fuel Gas Code (IFGC)	Adopted	Remain Adopted	Regulates fuel gas piping systems, gas appliances, venting systems, combustion air requirements, and fuel gas safety outside residential IRC scope.	Gas piping systems, appliance installation, venting systems, combustion air, pressure regulation, shutoff valves, appliance clearances, fuel gas safety devices, and gas	Requires specialized inspection knowledge related to combustion systems and venting requirements. Fuel gas inspections are highly safety-sensitive due to	Modern IFGC cycles increasingly emphasize combustion safety, venting integrity, appliance efficiency, and coordination with modern sealed-building construction practices.	Improper venting remains one of the most common fuel gas safety hazards nationally. Coordination between IRC and IFGC applicability can create confusion if local amendments do not

Code	Current Status	Proposed Action	What the Code Regulates	Major Areas of Regulation	Major Operational Impacts	Major Differences / Modernization Trends	Key Policy or Enforcement Considerations
				appliance connections.	explosion and carbon monoxide risks.		clearly define scope boundaries.
2021 International Energy Conservation Code (IECC)	Adopted	Remain Adopted	Regulates minimum building energy efficiency standards for residential and commercial construction. Intended to reduce long-term energy consumption and improve building performance.	Insulation, air sealing, blower door testing, duct leakage testing, fenestration performance, HVAC efficiency, lighting efficiency, building envelope performance, and energy documentation requirements.	Creates substantial increases in inspection complexity, testing coordination, documentation review, and contractor education requirements. Enforcement increasingly depends on performance testing rather than visual inspection alone.	The 2021 IECC significantly increases insulation, air sealing, and testing requirements compared to older energy code cycles. Modern codes increasingly encourage electrification readiness, high-efficiency systems, and renewable energy integration.	Energy code compliance may materially increase construction costs, inspection time, and consultant involvement. More airtight buildings may create indoor air quality and moisture concerns if ventilation systems are improperly installed. Enforcement consistency can become difficult without standardized testing and documentation procedures.
2024 International Property Maintenance Code (IPMC)	Adopted	Remain Adopted / Potentially Refined	Regulates minimum maintenance standards for existing buildings and occupied properties. Establishes minimum standards for sanitation, structural maintenance, habitability, weather protection, occupancy	Exterior maintenance, unsafe structures, sanitation, pest infestation, weatherproofing, occupancy standards, plumbing functionality, heating requirements, minimum habitability, windows, doors, roofs, stairs, railings, and deteriorated property conditions.	IPMC enforcement is labor-intensive and often complaint-driven. Requires significant coordination between code enforcement, legal counsel, administrative hearing procedures, and property owners. Enforcement actions can become highly resource-intensive.	Unlike construction codes, the IPMC regulates existing occupied properties rather than new construction. Modern IPMC enforcement increasingly emphasizes minimum habitability, tenant safety, and neighborhood stabilization.	Potential overlap exists with nuisance ordinances, unsafe structure regulations, zoning enforcement, and rental regulations. Enforcement can become subjective without objective standards and internal policies. Due process protections, notice procedures, appeal rights, and enforcement consistency are critically

Code	Current Status	Proposed Action	What the Code Regulates	Major Areas of Regulation	Major Operational Impacts	Major Differences / Modernization Trends	Key Policy or Enforcement Considerations
			conditions, and unsafe structures.				important due to the property rights implications of the code.
2023 National Electrical Code (NEC)	Adopted	Remain Adopted	Regulates electrical systems, electrical wiring, grounding systems, overcurrent protection, electrical equipment, and electrical safety standards.	Wiring methods, grounding systems, panels, overcurrent protection, GFCI protection, AFCI protection, surge protection, solar systems, EV charging systems, battery storage systems, and electrical equipment installation.	Electrical inspections have become increasingly technical due to modern smart systems, renewable energy systems, battery storage systems, and EV infrastructure. Specialized expertise is increasingly required.	The 2023 NEC substantially expands EV charging infrastructure requirements, surge protection requirements, renewable energy coordination, and advanced electrical safety protections. Modern electrical systems are significantly more interconnected and technologically advanced than earlier code cycles.	Contractors and homeowners frequently underestimate the complexity of modern electrical requirements. Solar systems, battery storage, and EV infrastructure continue to create rapidly evolving inspection and permitting challenges.
2021 International Existing Building Code (IEBC)	Not Currently Adopted	Proposed for Adoption	Regulates repairs, alterations, additions, occupancy changes, rehabilitation projects, and adaptive reuse of existing buildings. Intended to provide flexibility for redevelopment while maintaining life safety standards.	Tenant finish-outs, occupancy changes, additions to existing structures, historic buildings, adaptive reuse projects, rehabilitation work, partial remodels, and existing building upgrades.	Adoption substantially improves staff flexibility when reviewing redevelopment projects and older buildings. Reduces unnecessary triggers that would otherwise require full compliance with new-construction standards under the IBC alone.	Modern code philosophy increasingly recognizes that existing buildings cannot always reasonably comply with new-construction standards. The IEBC creates structured compliance pathways that balance redevelopment feasibility with life safety objectives.	Without the IEBC, redevelopment projects can become economically infeasible because even minor renovations may trigger extensive upgrades. However, IEBC administration requires strong staff training because compliance paths can become highly technical and interpretation-sensitive.

Code	Current Status	Proposed Action	What the Code Regulates	Major Areas of Regulation	Major Operational Impacts	Major Differences / Modernization Trends	Key Policy or Enforcement Considerations
2021 International Swimming Pool and Spa Code (ISPSC)	Not Currently Adopted	Proposed for Adoption	Regulates swimming pools, spas, aquatic facilities, circulation systems, and pool safety standards. Intended primarily to reduce drowning risks and improve aquatic safety.	Pool barriers, gates, alarms, circulation systems, suction entrapment prevention, pool equipment, drains, water quality systems, safety covers, and aquatic facility safety requirements.	Pool review and inspections become more standardized and consolidated under a dedicated code framework. Particularly relevant in communities with high residential pool prevalence and STR activity.	Modern pool codes increasingly emphasize child drowning prevention, anti-entrapment systems, barrier requirements, and safety coordination. Many provisions reflect lessons learned from national drowning and entrapment incidents.	Potential overlap exists with fencing regulations, zoning setbacks, drainage regulations, and HOA requirements. Staff would need to determine applicability to existing pools, remodel triggers, and retroactive compliance thresholds.
2021 International Wildland-Urban Interface Code (IWUIC)	Not Currently Adopted	Under Considera tion	Regulates wildfire mitigation and ignition-resistant construction in areas where development interfaces with vegetation and wildfire-prone terrain. Intended to reduce wildfire exposure and improve community resiliency.	Defensible space, vegetation management, ignition-resistant construction materials, ember-resistant vents, roofing materials, emergency access, wildfire exposure mitigation, fuel reduction zones, and wildfire-resistant site design.	Would create substantial coordination requirements between Development Services, Fire, Engineering, Emergency Management, and vegetation management practices. Enforcement could become highly operational and geographically sensitive.	Modern wildfire science increasingly demonstrates that ember exposure, vegetation proximity, roadway access, and ignition-resistant construction are major factors in structure survivability during wildfire events. The IWUIC was specifically developed in response to catastrophic WUI fire events nationwide.	Potential construction cost increases, vegetation management concerns, HOA conflicts, and roadway limitations may create implementation challenges. Staff would likely recommend targeted applicability or mapped wildfire hazard areas rather than automatic citywide implementation. Particularly relevant due to Lago Vista's terrain, vegetation patterns, drought exposure, and regional wildfire risks.

Major Implementation Issue	Description	Common Examples / Trigger Areas	Potential Impacts on the City	Potential Mitigation Strategies
1. Existing Development Patterns vs. Modern Codes	One of the most significant challenges municipalities encounter after adopting newer ICC code cycles is that many older developments, roadway systems, and structures were constructed under substantially different standards and may not conform to modern requirements. Modern codes are generally written for new construction and ideal site conditions, whereas many existing communities developed incrementally over decades.	Narrow subdivision streets Dead-end roads without modern turnarounds Older commercial corridors lacking fire access widths Existing buildings without ADA accessibility upgrades Older drainage systems that do not meet current engineering standards Existing structures lacking energy compliance features Older multifamily developments with limited parking or fire separation	Redevelopment projects may become economically infeasible Existing businesses may struggle with tenant finish-outs or occupancy changes Increased variance and waiver requests Potential tension between redevelopment goals and strict code compliance Infrastructure upgrades may be required unexpectedly Increased appeals and alternative means and methods requests	Adoption of the IEBC to provide flexibility for existing structures Development of administrative modification procedures Use of phased compliance strategies where legally appropriate Clear policies regarding what triggers full upgrades Coordination between Development Services, Fire, Engineering, and Legal staff
2. Increased Enforcement Subjectivity	Modern construction and maintenance codes increasingly rely on engineering judgment, performance-based standards, interpretation of manufacturer specifications, and alternative compliance methods. Unlike older prescriptive code cycles, many modern provisions require staff interpretation and technical discretion.	Alternative means and methods requests Drainage and grading interpretation Mechanical ventilation calculations Energy testing compliance failures Structural engineering assumptions	Different inspectors may interpret provisions differently Increased contractor frustration and complaints Fairness and consistency concerns Greater legal defensibility exposure Increased appeals to boards and commissions Selective enforcement allegations	Development of internal SOPs and interpretation manuals Written administrative policies Standardized inspection checklists Consistent staff training and calibration meetings Centralized interpretation authority through department leadership Documentation of interpretation history and precedent decisions

Major Implementation Issue	Description	Common Examples / Trigger Areas	Potential Impacts on the City	Potential Mitigation Strategies
		Wildfire defensible space interpretation Property maintenance enforcement thresholds under the IPMC	Difficulty establishing predictable review timelines	
3. Housing Affordability and Construction Cost Impacts	Modern code cycles substantially increase construction complexity and regulatory compliance requirements. While many changes improve life safety and resiliency, they also increase construction costs, engineering involvement, testing requirements, and inspection obligations.	Expanded energy code requirements Mandatory blower door testing Increased insulation standards Fire suppression system requirements Accessibility upgrades Ignition-resistant construction standards Enhanced fire access requirements Structural resiliency upgrades	Increased residential construction costs Increased commercial development costs Increased consultant and engineering fees Longer review timelines Potential reduction in housing affordability Smaller builders may struggle with compliance complexity Increased permit processing demands	Clear administrative guidance documents Contractor education and outreach programs Phased implementation periods where appropriate Careful evaluation of local amendments to avoid unnecessary overregulation Adoption of the IEBC to support redevelopment flexibility Coordination between code enforcement and long-term housing policy goals
4. Increasing Technical Specialization	Historically, municipalities could enforce building codes largely through generalized inspection experience. Modern code cycles increasingly require specialized technical knowledge involving engineering systems, energy compliance, mechanical ventilation, fire protection	Solar and battery storage systems EV charging infrastructure Commercial kitchen exhaust systems Advanced HVAC and ventilation systems	Increased staff training demands Greater reliance on third-party consultants Increased administrative costs Longer review periods Difficulty recruiting and retaining qualified inspectors and reviewers	Continued professional training and certification support Use of consultant review contracts where needed Development of specialty review procedures Standardization of submittal requirements

Major Implementation Issue	Description	Common Examples / Trigger Areas	Potential Impacts on the City	Potential Mitigation Strategies
	systems, and integrated building technologies.	Engineered structural systems Energy testing and verification Fire suppression and alarm coordination Smart-building technologies	Increased need for multidisciplinary coordination	Adoption of engineering and development manuals Interdepartmental coordination protocols
5. Wildfire and Emergency Access Exposure	Hill Country and wildland-urban interface communities increasingly face elevated wildfire exposure risks due to drought conditions, vegetation density, steep terrain, and constrained roadway access. Modern fire and wildfire codes increasingly focus on evacuation reliability, emergency access, defensible space, and ignition-resistant construction.	Narrow hillside roads Dead-end streets with limited turnaround capacity Dense cedar and brush vegetation Structures located adjacent to natural vegetation Limited secondary emergency access routes Water supply limitations during fire events Combustible exterior construction materials	Increased wildfire exposure risk Emergency evacuation challenges Fire apparatus access limitations Potential infrastructure upgrade requirements Increased pressure for vegetation management enforcement Potential insurance and liability concerns Increased development review complexity in wildfire-prone areas	Evaluation of the IWUIC for targeted application Coordination with regional wildfire planning efforts Vegetation management and defensible space programs Enhanced emergency access planning Fire access coordination during subdivision review Consideration of ignition-resistant construction standards in high-risk areas Coordination with Travis County and regional emergency management agencies

ORDINANCE NO. 26-06-04-02

AN ORDINANCE OF THE CITY COUNCIL OF THE CITY OF LAGO VISTA, TEXAS, AMENDING CHAPTER 3, "BUILDING REGULATIONS," OF THE CITY OF LAGO VISTA CODE OF ORDINANCES; ADOPTING UPDATED BUILDING, RESIDENTIAL, FIRE, EXISTING BUILDING, MECHANICAL, PLUMBING, FUEL GAS, SWIMMING POOL, ELECTRICAL, AND LIFE SAFETY CODES; PROVIDING FOR LOCAL AMENDMENTS, ADMINISTRATIVE PROCEDURES, PERMIT REQUIREMENTS, PERMIT EXPIRATION AND EXTENSION PROCEDURES, DESIGN CRITERIA, DEVELOPMENT PROCEDURE MANUAL REFERENCES, AND RELATED BUILDING REGULATION REQUIREMENTS; PROVIDING FOR CONFLICTS; PROVIDING FOR SEVERABILITY; PROVIDING FOR A SAVINGS CLAUSE; PROVIDING FOR PUBLICATION; AND ESTABLISHING AN EFFECTIVE DATE.

WHEREAS, the City of Lago Vista is authorized under Texas Local Government Code Chapters 51, 54, 211, 212, 214, and other applicable state law to adopt and enforce regulations necessary to protect the public health, safety, and welfare; and

WHEREAS, the City Council has previously adopted building, residential, fire, plumbing, electrical, mechanical, energy, and related construction codes applicable within the City; and

WHEREAS, the City Council finds that periodic updates to Chapter 3, "Building Regulations," are necessary to maintain consistency with currently adopted model codes, applicable state law, local construction conditions, administrative procedures, and public safety needs; and

WHEREAS, the City Council further finds that clear permit application requirements, inspection procedures, permit expiration provisions, extension procedures, and references to adopted administrative manuals improve consistency, transparency, and enforceability; and

WHEREAS, the City Council desires to amend Chapter 3 of the City of Lago Vista Code of Ordinances as set forth herein and in the attached exhibit.

NOW, THEREFORE, BE IT ORDAINED BY THE CITY COUNCIL OF THE CITY OF LAGO VISTA, TEXAS:

SECTION 1. Findings.

The findings and recitals set forth above are hereby found to be true and correct and are incorporated into this Ordinance for all purposes.

SECTION 2. Amendment to Chapter 3.

Chapter 3, "Building Regulations," of the City of Lago Vista Code of Ordinances is hereby amended as shown in **Exhibit "A,"** attached hereto and incorporated herein for all purposes.

SECTION 3. Adoption of Updated Codes.

The City hereby adopts by reference the codes identified in Chapter 3, Article 3.100, including but not limited to the following, as amended by local ordinance:

1. 2021 International Building Code;
2. 2021 International Residential Code;
3. 2021 International Existing Building Code;
4. 2021 International Fire Code;
5. 2021 International Mechanical Code;
6. 2021 International Plumbing Code;
7. 2021 International Fuel Gas Code;
8. 2021 International Swimming Pool and Spa Code;
9. 2023 National Electrical Code, NFPA 70; and
10. 2021 National Fire Protection Association Life Safety Code, NFPA 101.

SECTION 4. Local Amendments and Administrative References.

Local amendments, administrative procedures, permit submittal requirements, design criteria, inspection requirements, permit expiration and extension procedures, and related construction requirements shall be applied as set forth in Chapter 3 and any adopted exhibit, Development Procedure Manual, Engineering Criteria Manual, local amendment appendix, or other document adopted or referenced by ordinance.

Administrative manuals may be used to implement procedures, forms, submittal requirements, review processes, and technical guidance, provided such manuals do not conflict with the City Code, adopted ordinances, or applicable state or federal law.

SECTION 5. Conflict.

All ordinances or parts of ordinances in conflict with this Ordinance are hereby repealed to the extent of such conflict only.

Where this Ordinance or Chapter 3 conflicts with adopted model codes, local amendments adopted by ordinance shall control except where prohibited by state law. Where Chapter 3 conflicts with another City ordinance, the provisions shall be interpreted to give effect to the more specific or more restrictive requirement, unless otherwise required by law.

SECTION 6. Savings Clause.

All rights, remedies, penalties, obligations, permits, applications, enforcement actions, and proceedings existing prior to the effective date of this Ordinance shall remain valid and enforceable unless expressly modified by this Ordinance.

Applications submitted and deemed complete prior to the effective date of this Ordinance may proceed under the previously applicable regulations to the extent authorized by law and City ordinance.

SECTION 7. Severability.

If any section, subsection, sentence, clause, phrase, or provision of this Ordinance is found to be unconstitutional, invalid, or unenforceable by a court of competent jurisdiction, such finding shall not affect the validity of the remaining portions of this Ordinance.

SECTION 8. Publication.

The City Secretary is directed to publish this Ordinance or its caption as required by law.

SECTION 9. Effective Date.

This Ordinance shall be effective immediately upon passage, approval, and publication as required by law.

PASSED AND APPROVED this 4th day of June, 2026.

CITY OF LAGO VISTA, TEXAS

_____

Shane Saum

Mayor, City of Lago Vista, Texas

ATTEST:

_____

Eric De La Cruz

Assistant City Secretary, City of Lago Vista, Texas

AGENDA ITEM NO. X.2

Item Cover Page

CITY COUNCIL AGENDA ITEM REPORT

DATE: June 4, 2026

SUBMITTED BY: Karen Van Ness, City Council

SUBJECT: Consider, discuss, and take action regarding funding for Bowden Point and Dawn Drive Parks.

BACKGROUND: KLVB presented multiple options for continued beautification and park development of Bowden Point Park to City Council. City Council provided feedback and directed KLVB to review and coordinate with the Parks and Recreation Advisory Committee (PRAC) for PRAC review and recommendations. City Council also directed the Parks and Recreation Director, with PRAC input, to develop an alternative, iterative approach for the development of Dawn Circle Park, with special emphasis on a Phase 1 development plan that would enable additional, future development of park amenities. City Council discussed the possibility of leveraging funds from the Tree Mitigation Fund for these park development-related efforts.

Working in coordination, PRAC, KLVB, and the Parks and Recreation Director have developed the following recommendations for presentation to, and consideration and possible action by, City Council:

- Updated project plan and cost estimates for Bowden Point Park Art Walkway.
- Proposed Phase 1 plan and cost estimates for Dawn Circle Park, based on PRAC input on prioritization of amenities and landscape architect recommendations on amenity placement
- Future potential collaboration opportunities between KLVB and PRAC.

FINANCIAL IMPACT: TBD

RECOMMENDATION: Recommended priority items for a "Phase 1"of Dawn Circle Park and park development initiative for Bowden Park, with line of sight on future recommended amenities in subsequent phases.

ATTACHMENTS:
Cover Sheet_PRAC-KLVB Presentation_CC Meeting 06.04.2026.docx

Agenda Item Cover Sheet

CITY COUNCIL AGENDA ITEM REPORT

DATE: June 4, 2026

SUBMITTED BY: Councilor Van Ness, City Council

SUBJECT: Consider, discuss, and take action on joint KLVB – PRAC Recommendations for continued development of Bowden Point Park and Phase 1 development of Dawn Circle Park.

BACKGROUND: KLVB presented multiple options for continued beautification and park development of Bowden Point Park to City Council. City Council provided feedback and directed KLVB to review and coordinate with the Parks and Recreation Advisory Committee (PRAC) for PRAC review and recommendations. City Council also directed the Parks and Recreation Director, with PRAC input, to develop an alternative, iterative approach for the development of Dawn Circle Park, with special emphasis on a Phase 1 development plan that would enable additional, future development of park amenities. City Council discussed the possibility of leveraging funds from the Tree Mitigation Fund for these park development-related efforts.

Working in coordination, PRAC, KLVB, and the Parks and Recreation Director have developed the following recommendations for presentation to, and consideration and possible action by, City Council:

- Updated project plan and cost estimates for Bowden Point Park Art Walkway;
- Proposed Phase 1 plan and cost estimates for Dawn Circle Park, based on PRAC input on prioritization of amenities and landscape architect recommendations on amenity placement;
- Future potential collaboration opportunities between KLVB and PRAC.

RECOMMENDATION: Approve KLVB – PRAC recommendations as follows:

- Approve Bowden Point Park proposed walkway project and expenditure for FY 2026; *and*
- Direct staff to include Phase 1 development of Dawn Circle Park as a CIP project for FY2027.

AGENDA ITEM NO. X.3

Item Cover Page

CITY COUNCIL AGENDA ITEM REPORT

DATE: June 4, 2026

SUBMITTED BY: Charles West, City Manager

SUBJECT: Consider, discuss, and take action regarding application for the use of Hot Funds by Oak Ridge Archery.

ATTACHMENTS:
OAK RIDGE ARCHERY - Application.pdf

APPLICATION

A – FUNDING CONSIDERATIONS CHECKLIST

Name of Event/Activity/Program/Facility: Oak Ridge Archery

If applicable, date of Event/Activity/Program/Facility: 2026

YES	NO	
☑	☐	Does your event/activity/program/facility pass Part One of the statutory test define specifically as directly enhancing and promoting visitors in Lago Vista AND directly enhancing and promoting the convention and hotel industry in Lago Vista?

YES	NO	
☑	☐	Does your event/activity/program/facility pass Part Two of the statutory test, defined specifically as fitting into one or more of the following categories?

Please check which category or categories:

- ☑ ~~Convention center~~ Sports facilities or visitor information centers
- ☐ Facilities, personnel and materials for registration of convention delegates
- ☑ Advertising and conducting solicitations and promotional programs to attract tourists and convention delegates
- ☐ Promotion of the arts, including instrumental and vocal music, dance, drama, folk art, creative writing, architecture, design and allied fields, painting, sculpture, photography, graphic and craft arts, motion pictures, radio, television, tape and sound recording
- ☐ Historical restoration and preservation projects or activities, or advertising and conducting solicitations and promotional programs to encourage tourists to visit preserved historic sites or museums in the area
- ☐ Funding signage directing the public to sights and attractions that are frequently visited by hotel guests
- ☐ Funding City or privately owned and operated transportation systems to: (a) transport tourists from hotels in and near the city to touristic attractions in or near the city, (b) the commercial center of the municipality, (c) other hotels in or near the municipality, and (d) a convention center in the municipality. The law specifically prohibits the use of the local hotel tax to cover the costs for a transportation system that serves the public.

YES	NO	
☑	☐	Is your application filled out thoroughly and completely, and are all required pages attached?
☑	☐	Is your request for funding in accordance with the maximum funding guidelines?
☐	☐	If applicable, have you submitted the Post-Funding Analysis and proofs of payment for last year's event/activity/program/facility?
☐	☐	If applicable, have you returned or repaid the City for any previous funds not used or not used lawfully?
☑	☐	Have you documented how you will accurately track out-of-town guests, showing that your event/activity/program/facility will attract tourists that will directly support visitors and the hotel and convention industry in the area?
☑	☐	Is your request for fifty percent (50%) or less of your total projected gross revenue from the event/activity/program/facility?
☑	☐	If you are applying under the Advertising category, is your request for fifty percent (50%) or less of your total projected advertising expenditures and have you documented your advertising budget?
☑	☐	Is your request no more than a one-to-one match for your event/activity/program/facility and does your application list anticipated matching funds?
☑	☐	If you are applying under the Advertising category, have you met the local requirement that advertising must be accomplished ***in advance*** of the event/activity/program/facility, and must utilize legitimate media for promotion outside of the area, i.e. direct mail, newspapers, magazines, radio, television, billboards, internet advertising?

B – FUNDING REQUEST
Organization Information

Date: 04/29/2026

Name of Organization:

Oak Ridge Archery

Address:

4940 Observatory Hill

City, State, Zip:

Lago Vista, Texas, 78645

Contact Name:

Dave Snyder

Contact Phone Number:

(702) 628 - 6967

Contact Email Address:

longbowlv3@icloud.com

Website for the Event/Activity/Program/Facility?

www.oakridgearcherytx.com

Is your organization: ☐ Non-Profit ☑ Private/For Profit

Tax ID #: FEIN# 88-1700901

Organization's Creation Date: 03/18/2022

Purpose of your organization:

Outdoor Recreation/Sports

Event/Activity/Program/Facility Information

Name of Event/Activity/Program/Facility:

Oak Ridge Archery

Date of Event/Activity/Program/Facility:

All of 2026

Primary Location of Event/Activity/Program/Facility:

Oak Ridge Archery 4940 Observatory Hill, Lago Vista, Texas

Amount of HOT Funding Requested:

$32,620

Date by which HOT Funding will be needed?

June 2026 if possible.

FUND USAGE: How will the funds be used , if awarded? Please describe in detai l.

$7,000 will be used for advertising and website redesign & maintanence.

$25,620 will be used for new and unique 3D targets, new backstop targets, range amenities & maintenance. Creation of additional premium one of kind target stations not found at other outdoor archery ranges in Texas.

Primary Purpose of Funded Event/Activity/Program/Facility:

The primary purpose is to provide a sports facility that will draw archers from outside our community and from across the State of Texas for a unique range experience. Where archers can participate in a range of events including tournaments, leagues, youth team events, corporate and team building events.

Check which statutory categories apply to the funding request AND the amount requested under each category:

☑ Sports ~~Convention center~~ **facilities or visitor information centers:** the acquisition of sites for and the construction, improvement, enlarging, equipping, repairing, operation, and maintenance of convention center facilities or visitor information centers, or both;
$ 25,620

☐ **Registration of convention delegates:** the furnishing of facilities, personnel, and materials forthe registration of convention delegates or registrants;
$ _____

☑ **Advertising, and conducting solicitations and promotional programs to attract tourists and convention delegates:** advertising andconductingsolicitations andpromotional programs toattracttouristsand convention delegatesorregistrantstothe municipalityorits vicinity;

$ 7,000

☐ **Promotion of the arts:** the encouragement, promotion, improvement, and application of the arts, including instrumental and vocal music, dance, drama, folk art, creative writing, architecture, design and allied fields, painting, sculpture, photography, graphic and craft arts, motion pictures, radio, television, tape and sound recording, and other arts related to the presentation, performance, and exhibition of these major art forms;
$ _____

☐ **Historical restoration and preservation projects or activities:** historical restoration and preservation projects or activities or advertising and conducting solicitations and promotional programs to encourage tourists and convention delegates to visit preserved historic sites or museums: (a) at or in the immediate vicinity of convention center facilities or visitor information centers; or (b) located elsewhere in the municipality or its vicinity that would be frequented by tourists and convention delegates;
$ _____

☐ **Signage:** Funding of signage directing the public to sights and attractions that are frequently visited by hotel guests. Must comply with all signage regulations.
$ _____

☐ **Transportation systems for Tourists:** Funding City or privately owned and operated transportation systems to: (a) transport tourists from hotels in and near the city to touristic attractions in or near the City, (b) the commercial center of the municipality, (c) other hotels in or near the municipality, and (d) a convention center in the municipality. The law specifically prohibits the use of the local hotel tax to cover the costs for a transportation system that serves the general public.
$ _____

Questions for ALL Funding Requests

How many years have you held this event/activity/program?

2 years

Expected attendance:

1,000

How many people attending the event/activity/program/facility will use Lago Vista hotels, motels, inns, or bed-and-breakfast establishments?

150

How many nights will they stay?

1 to 2 nights.

Do you reserve a room block for this event/activity/program/facility at an area hotel and, if so, for how many rooms and at which hotels?

N/A

Has the organization previously received HOT funding from the City of Lago Vista? Yes or No No

If yes, what year(s) _____, amount: $ _____,
and for what purpose: _____

List major events/projects that this organization or applicant has organized and hosted.

Safari Shoot - '25 '24North American Grand Slam - '24, '25. Monster Mash Bash - '24, '25.

Boy Scouts Archery Badge Qualifications - '25 IBO State Championship - '25

IBO Traditional World Qualifier - '25 S3DA Texas Outdoor/3D Championships - '25

Additional information such as schedules, financial statements, or other information may be asked to be provided.

Questions for Facilities

Answerthefollowingonlyifthefunding request is for a permanent facility such as a museum or visitor center.

Expected Attendance Monthly/Annually:

80+/- per Month 1,000 +/- Annually

Please note percentage of those in attendance that are staying at area hotels or lodging facilities:

15%

Questions for Events

Ifyourrequestisnotforanevent, please continue to the following section, Questions for Program s

Is this request for an event? (Yes or No) _____

Has this event been held previously? (Yes or No) _____

If Yes, please complete the following: Location:

_____

Date(s):

_____

Month/Year Held, Assistance Amount, Number of Hotel Rooms Used:

_____

_____

How will you measure the impact of your event on area hotel activity?

_____

Please list all other organizations, government entities, and grants that have offered financial support to your event/activity/program/facility:

_____

_____

_____

Please check all promotion efforts your organization is coordinating

- [x] Internet
- [x] Newspaper
- [ ] Radio
- [ ] TV
- [ ] Press releases to media
- [ ] Direct mailing to out-of-town recipients
- [x] Other

What specific geographic areas do your advertising materials and promotions reach?

Magazine Publication - Globaly Newspaper - Local Advertising Internet - Statewide

What number of individuals ***located in another city or county*** will your proposed marketing reach?

250,000 people

Questions for Programs

Pleasecompletethissectionifthe funding request is NOT for an event or facility.
Date of completion for the proposed program:

_____

Is the request to promote the arts? (Yes or No) _____

If yes, please explain:

_____

_____

_____

Is the request to fund historical restoration or preservation? (Yes or No) _____

If yes, please explain:

_____

_____

_____

Required Additional Information

The following required information must be included for a submission to be considered complete, unless waived by City Council during the application process:

- Budget for the proposed event/project, including all revenue sources and expenditures
- Organization financial statements from the previous two years, if available
- Articles of Incorporation
- By-Laws
- Board Members – names and titles

Additional information such as schedules, or other information may be asked to be provided.

Application Packets must be returned in accordance with the deadlines of submission referenced in Attachment A to the City Manager at charles.west@lagovistatexas.gov.

OAK RIDGE ARCHERY

2026 Official Event Schedule

Lago Vista, Texas | oakridgearcherytx.com

Oak Ridge Archery is proud to present its full lineup of competitive and recreational events for 2026. From youth programs to championship-level tournaments, there is something for every archer. All events are held at our facility in Lago Vista, Texas. Registration details and updates will be posted at **oakridgearcherytx.com**.

#	Event Name	Date(s)	Type	Expected Attendance
1	**Safari Shoot**	April 18, 2026	Tournament	**56**
2	**S3DA State Outdoor Championship**	May 8, 2026	Championship	**18**
3	**S3DA State 3D Championship**	May 9, 2026	Championship	**18**
4	**Adult Summer League**	May 27 – August 1, 2026	League	**25**
5	**Youth Summer League**	May 27 – August 12, 2026	Youth League	**18**
6	**North American Grand Slam**	September 26, 2026	Tournament	**100**
7	**Halloween Multi-Day Event**	October 10 – October 25, 2026	Seasonal Event	**350**
8	**Adult Fall League**	November 4 – December 20, 2026	League	**35**
9	**Wildcreet 50 Shoot**	November 2026 (Date TBD)	Tournament	**120**
10	**Adult Winter League**	January – March 2026	League	**20**
	TOTAL		**10 Events**	**760**

NOTES & INFORMATION

- All events are held at Oak Ridge Archery, Lago Vista, Texas unless otherwise noted.
- The Wildcreet 50 Shoot date is to be determined. Registration details will be announced on our website and social media.
- Adult Winter League attendance reflects the January through March 2026 session.
- Youth and Adult league participants must complete a registration form and sign a waiver prior to participation.
- For the most up-to-date event information, visit **oakridgearcherytx.com** or follow us on social media.

Oak Ridge Archery 2026 Marketing Budget

Prepared for: OakRidge Archery

Prepared by: Two7One Creative House LLC

Date: April 20, 2026

---

1. Executive Summary

This document outlines the formal marketing budget for Oak Ridge Archery for the 2026 calendar year. The total approved budget is exactly $14,000.00.

This comprehensive plan covers the production of five professional marketing videos, a complete website redesign and development project, and targeted META (Facebook/Instagram) advertising campaigns for six major events throughout the year. The advertising budget has been strategically allocated based on the expected attendance of each event to ensure maximum return on investment.

---

2. Master Budget Breakdown

The $14,000 budget is divided into three primary categories: Video Production, Website Development, and Event Advertising.

Category	Description	Amount	Percentage
Video Production	5 professional marketing videos at $1,400 each	$7,000.00	50.0%
Website Redesign	Complete website redesign and development	$1,500.00	10.7%
META Ad Spend	Targeted advertising for 6 major events	$5,500.00	39.3%
TOTAL BUDGET	Fully allocated for 2026	$14,000.00	100%

---

3. Fixed Costs: Content & Infrastructure ($8,500)

Video Production ($7,000)

Professional video content is the cornerstone of our META advertising strategy. We will produce five high-quality videos tailored for specific events and general brand awareness.

- Cost per video: $1,400.00
- Total videos: 5
- Total Video Budget: $7,000.00

Website Redesign & Development ($1,500)

A modern, conversion-optimized website is critical for capturing the traffic generated by our advertising campaigns. This one-time investment covers the complete redesign and development of the Oak Ridge Archery website.

•Total Website Budget: $1,500.00

---

4. META Advertising Allocation ($5,500)

The $5,500 advertising budget is distributed across six events. The Safari Shoot campaign has already concluded, with the actual spend recorded. The remaining $4,883.97 has been proportionally allocated to the five upcoming events based on their expected attendance goals.

Event Attendance Goals

Event	Date	Expected Attendance
Safari Shoot	April 18, 2026	56 (Actual)
Adult Summer League	May 27 - August 1, 2026	25
North American Grand Slam	September 26, 2026	100
Halloween Multi-Day Event	October 10 - October 25, 2026	350
Wildcreet 50 Shoot	November 2026 (Exact Date TBD)	120
Adult Fall League	November 4 - December 20, 2026	35
Total Expected Attendance		686

Advertising Budget by Event

Event	Status	Ad Spend Allocation	Daily Budget
Safari Shoot	Completed	$616.03 (Actual)	N/A
Adult Summer League	Upcoming (30-day campaign)	$193.81	$6.46 / day
North American Grand Slam	Upcoming (60-day campaign)	$775.23	$12.92 / day
Halloween Multi-Day Event	Upcoming (84-day campaign)	$2,713.32	$32.30 / day
Wildcreet 50 Shoot	Upcoming (31-day campaign)	$930.28	$30.01 / day
Adult Fall League	Upcoming (30-day campaign)	$271.33	$9.04 / day
TOTAL AD SPEND		$5,500.00	

Note: Daily budgets are calculated based on the planned campaign duration leading up to each event. The Halloween Multi-Day Event receives the largest allocation ($2,713.32) as it accounts for over 50% of the total expected attendance for the year.

---

5. Conclusion

This$14,000 budgetprovides Oak Ridge Archery with a comprehensive marketing infrastructure. By investing heavily in high-quality video assets and a modern website, we ensure that the $5,500 allocated to META advertising will convert at the highest possible rate. The proportional allocation of ad spend guarantees that our largest events receive the necessary funding to hit their aggressive attendance targets.

Example of out-of-town visitor tracking

7:30 PM Tue Apr 28 80%

smartwaiver ORATX

Waiver Console

Search

Type two or more characters to search

Search Type: All

FILTERS REFRESH

Name & Birthday	Title	Date	Tag	Check-ins
Feb, 28 1996 (30)	RISK ASSUMPTION AND INDEMNI...	Apr 18	76537	1
, Austin May, 4 1995 (30)	RISK ASSUMPTION AND INDEMNI...	Apr 18	78613	1
, Zane Dec, 28 1994 (31)	RISK ASSUMPTION AND INDEMNI...	Apr 18	78703	1
, Billy Sep, 20 1975 (50)	RISK ASSUMPTION AND INDEMNI...	Apr 18	76861	1
, Jeff Aug, 24 1982 (43)	RISK ASSUMPTION AND INDEMNI...	Apr 18	78613	1
, Chelsi Jul, 21 1984 (41)	RISK ASSUMPTION AND INDEMNI...	Apr 18	78645	1
, Blake Oct, 27 1997 (28)	RISK ASSUMPTION AND INDEMNI...	Apr 18	78611	1

Done

AGENDA ITEM NO. X.4

Item Cover Page

CITY COUNCIL AGENDA ITEM REPORT

DATE: June 4, 2026

SUBMITTED BY: Eric DeLaCruz, Finance

SUBJECT: Consider, discuss, and take possible action on award of of the Automated Weather Observing System (AWOS III PT) Replacement and Relocation Project at Rusty Allen Airport, TxDOT CSJ No. 26AWLAGOV and authorizing the City Manager to execute contract documents.

BACKGROUND: On March 25, 2026 the City of Lago Vista solicited sealed bids for the replacement and relocation/installation of an Automated Weather Observing System III with Present Weather Sensor and Thunder Strike Alert (AWOS III PT) at Rusty Allen Airport. The project includes siting, licensing, installation, commissioning coordination, NADIN connection service, and one year of required maintenance in accordance with FAA and TxDOT Aviation Division requirements.

The project was publicly advertised in accordance with state procurement requirements and bid documents were made available through the City's website and BidNet Direct. The project is funded through the Texas Department of Transportation Aviation Division airport improvement program and is subject to applicable FAA, TxDOT, and Davis-Bacon requirements.

FINDINGS: One bid was received by closing date of April 21, 2026 from DBT Transportation Services, LLC.

The bid allowed for multiple award scenarios, including:

Base Bid - $99,500
Replacement of the existing AWOS III system in its current location, including present weather sensor, self-supporting tower, NADIN connection service, and one year of maintenance.

Alternate Base Bid - $134,000
Removal, relocation, and installation of the AWOS III system at a newly approved site, including FAA/TxDOT site approval, FCC licensing, NADIN connection service, and one year of maintenance.

Optional Equipment Bids -
Thunder Strike Alert - $24,500
Upgrade to Ultra Sonic Wind Sensor - $500

FINANCIAL IMPACT:

The project is funded through a Texas Department of Transportation (TxDOT) Aviation Division grant in the amount of $150,000. The City's required 10% local match has been budgeted in the FY 2025-2026 budget.

Pricing Options:

Base Bid - $99,500
Replacement of the existing AWOS III system in its current location, including present weather sensor, self-supporting tower, NADIN connection service, and one year of maintenance.

Alternate Base Bid - $134,000
Removal, relocation, and installation of the AWOS III system at a newly approved site, including FAA/TxDOT site approval, FCC licensing, NADIN connection service, and one year of maintenance.

Optional Equipment -
Thunder Strike Alert - $24,500
Upgrade to Ultra Sonic Wind Sensor - $500

RECOMMENDATION:

Staff recommends awarding the contract to DBT Transportation Services, LLC as the lowest responsive and responsible bidder and authorizing the City Manager to execute all necessary contract documents related to the project.

ATTACHMENTS:
DBT 26AWLAGOV Proposal.pdf
26AWLAGOV Bid Document Packet for_STATE_FUNDED.pdf

TRANSPORTATION SERVICES

BID Response

Expressly Prepared For:

City of Lago Vista

for

Rusty Allen Airport

AWOS Installation Project

CSJ: 26AWLAGOV

April 21, 2026

Prepared By:
DBT Transportation Services LLC
1065 National Drive, Suite 1
Sacramento, CA 95834

BID
26AWLAGOV

Project Description: Siting, licensing and installation of Automated Weather Observation Systems III with Present Weather Sensor and Thunderstrike Alert.

Bid by: Name of Bidder: DBT Transportation Services
Address: 1065 National Dr, Ste #1 Sacramento, CA 95834
Telephone: 303-330-7883 Fax: 970-237-3541
E-mail Address: michael.trosclair@adbsafegate.com

Pursuant to the foregoing Instruction to Bidders, the undersigned bidder having examined the plans and specifications with related documents and the site of the proposed work, and being familiar with all the conditions surrounding the construction of the project hereby proposes to furnish all necessary superintendence, labor, machinery, equipment, tools, materials and supplies to complete all the work upon which is bid in accordance with the contract documents, within the time set forth and at the prices stated below:

Base Bid: Replace in Existing Location					
Item	**Qty**	**Unit**	**Description** **Written & Numeric Unit Price**	**Unit Price**	**Total Price**
1	1	LS	Remove existing equipment and replace in current location, AWOS III including present weather sensor, with a self-supporting tower installed complete in place according to specification. Ninety Three Thousand Five Hundred dollars Zero cents	$ 93,500.00	$ 93,500.00
2	1	LS	NADIN/WMSCR Interface Equipment with one year of NADIN connection service. One Thousand dollars Zero cents	$ 1,000.00	$ 1,000.00
3	1	LS	One year of AWOS maintenance that meets the requirements of FAA AC No. 150/5220-16 (latest revision) Five Thousand dollars Zero cents	$ 5,000.00	$ 5,000.00

Total Base Bid $ **99,500.00**

Alternate Base Bid: Replace and Relocate					
Item	**Qty**	**Unit**	**Description Written & Numeric Unit Price**	**Unit Price**	**Total Price**
1	1	LS	Remove existing equipment and relocate and install AWOS III including present weather sensor with self-supporting tower installed complete in place including site selection, site approval by TxDOT and FAA, and acquisition of FCC licensing, according to specification. Bidders shall account for all necessary expenses and effort related to site preparation to obtain a commissioned AWOS. One Hundred Twenty Eight Thousand dollars Zero cents	$128,000.00	$ 128,000.00
2	1	LS	NADIN/WMSCR Interface Equipment with one year of NADIN connection service. One Thousand dollars Zero cents	$ 1,000.00	$ 1,000.00
3	1	LS	One year of AWOS maintenance that meets the requirements of FAA AC No. 150/5220-16 (latest revision) Five Thousand dollars Zero cents	$ 5,000.00	$ 5,000.00

Total Alternate Base Bid $ **134,000.00**

Additive Alternate Bid 1-2 Items below should be bid with the option to award depending on the availability of funds					
Item	**Qty**	**Unit**	**Description** **Written & Numeric Unit Price**	**Unit Price**	**Total Price**
A1	1	EA	Thunder Strike Alert Twenty Four Thousand Five Hundred dollars Zero cents	$ 24,500.00	$ 24,500.00
A2	1	EA	Upgrade to Ultra Sonic Wind Sensor Five Hundred dollars Zero cents	$ 500.00	$ 500.00

Total Bid $ **124,500.00**

It is understood the quantities of work to be done at unit prices are approximate and are intended for bidding purposes only. Amounts are to be shown in both words and numbers. In case of discrepancy the unit price amount shown in words shall govern. Bidders shall bid on the Base Bid, **Alternate Base Bid,** and Additive Alternate 1. Bidders may bid on Alternate Number 2.

The Owner reserves the right to award to the lowest responsible bidder for any combination of the base bid and alternates. Funding availability will be considered in selecting the bid award.

Bidder hereby agrees to commence work under this contract on or before a date to be specified in a written "Notice to Proceed" for installation of the equipment. Following issuance of the written "Notice to Proceed" for installation, installation shall be completed within 90 calendar days thereafter (does not include TxDOT, FCC and FAA review time). Bidder further agrees to pay as liquidated damages the sum of $200.00 for each consecutive calendar day to complete the work beyond the allotted time or as extended by an approved change Order.

Bidder understands the Owner reserves the right to reject any irregular bid and the right to waive technicalities if such waiver is in the best interest of the Owner and conforms to State and local laws and ordinances pertaining to the letting of construction contracts. The bidder agrees this bid shall be good and may not be withdrawn for a period of 60 calendar days after the scheduled closing time for receiving bids.

Upon receipt of the written "Notice of Award", the bidder will execute the formal contract agreement within 14 days and deliver a surety bond or bonds as required under the contract documents. The bid security attached in the sum of 2% of the total bid price is to become the property of the Owner in the event the contract is not executed as set forth in the contract documents as liquidated damages for the delay and additional expense caused thereby.

By submission of a bid under this solicitation, bidder certifies the only persons or parties interested in this bid are those named, and the bidder has not directly or indirectly participated in collusion, entered into an agreement or otherwise taken any action in restraint of free competitive bidding in connection with the project.

Nick Haines	CEO
Signature	Title
Nick Haines	614-573-8235
Printed Name	Phone
1065 National Drive, Suite #1	Sacramento, CA 77042
Mailing Address	City, State, Zip Code

Addendum:

The undersigned Bidder certifies that he has acknowledged the addendum(s) to the contract as indicated below.

Addendum No.: N/A dated: N/A

Addendum No.: _____ dated: _____

Addendum No.: _____ dated: _____

Qualification Acknowledgment:

The undersigned Bidder has enclosed the bidder's qualifications per General Provision 20-02, Prequalification of Bidders.

__X__ I have enclosed qualification statements.

Qualification Acknowledgment Signature:

Nics Iden	CEO
Signature	Title
1065 National Drive, Suite #1	Sacramento, CA 95834
Mailing Address	City, State, Zip Code

BID BOND

KNOW ALL BY THESE PRESENTS, That we, DBT Transportation Services, LLC

of 1500 CityWest Blvd Suite 550, Houston, TX 77042

(hereinafter called the Principal), as Principal, and Hartford Casualty Insurance Company

(hereinafter called the Surety), as Surety are held and firmly bound unto City of Lago Vista

5803 Thunderbird Street, Lago Vista, TX 78645

(hereinafter called the Obligee) in the penal sum of Two Percent of Amount Bid

Dollars (2%)

for the payment of which the Principal and the Surety bind themselves, their heirs, executors, administrators, successors and assigns, jointly and severally, firmly by these presents.

THE CONDITION OF THIS OBLIGATION IS SUCH, That WHEREAS, the Principal has submitted or is about to submit a proposal to the Obligee on a contract for Replace and install of an Automated Weather Observation System III with Present Weather Sensor, Thunder Strike Alert (AWOS III PT) for Rusty Allen Airport; Project No. 26AWLAGOV

NOW, THEREFORE, If the said Contract be timely awarded to the Principal and the Principal shall, within such time as may be specified, enter into the Contract in writing, and give bond, if bond is required, with surety acceptable to the Obligee for the faithful performance of the said Contract, then this obligation shall be void; otherwise to remain in full force and effect.

Signed and sealed this 14th day of April, 2026.

Witness

DBT Transportation Services, LLC (Seal)

Principal

By:

Title

Misty Witt

Witness

Hartford Casualty Insurance Company

By

Judit Castro Vidal, Attorney-in-Fact

POWER OF ATTORNEY

Direct Inquiries, Bond Authenticity and Claims to:
THE HARTFORD
BOND, T-14
One Hartford Plaza
Hartford, Connecticut 06155
Bond.Claims@thehartford.com
call: **888-266-3488** *or fax:* **860-757-5835**

KNOW ALL PERSONS BY THESE PRESENTS THAT:

Agency Name: HIGGINBOTHAM INSURANCE AGENCY INC
Agency Code: 61-615388

- [X] **Hartford Fire Insurance Company**, a corporation duly organized under the laws of the State of Connecticut
- [X] **Hartford Casualty Insurance Company**, a corporation duly organized under the laws of the State of Indiana
- [X] **Hartford Accident and Indemnity Company**, a corporation duly organized under the laws of the State of Connecticut
- [ ] **Hartford Insurance Company of the Midwest**, a corporation duly organized under the laws of the State of Indiana

having their home office in Hartford, Connecticut, (hereinafter collectively referred to as the "Companies") do hereby make, constitute and appoint, ***up to the amount of*** Unlimited :
Christopher Kolkhorst, Michael Maddux, Denise Raker, Dudley C. Ray, Judit Castro Vidal of HOUSTON, Texas

their true and lawful Attorney(s)-in-Fact, each in their separate capacity if more than one is named above, to sign its name as surety(ies) only as delineated above by ☒, and to execute, seal and acknowledge any and all bonds, undertakings, contracts and other written instruments in the nature thereof, on behalf of the Companies in their business of guaranteeing the fidelity of persons, guaranteeing the performance of contracts and executing or guaranteeing bonds and undertakings required or permitted in any actions or proceedings allowed by law.

In Witness Whereof, and as authorized by a Resolution of the Board of Directors of the Companies on May 23, 2016 the Companies have caused these presents to be signed by its Assistant Vice President and its corporate seals to be hereto affixed, duly attested by its Assistant Secretary. Further, pursuant to Resolution of the Board of Directors of the Companies, the Companies hereby unambiguously affirm that they are and will be bound by any mechanically applied signatures applied to this Power of Attorney.

Phyllis A. Clark, Assistant Secretary

Joelle L. LaPierre, Assistant Vice President

STATE OF FLORIDA
COUNTY OF SEMINOLE } **SS.** Lake Mary

On this 1st day of March, 2024, before me personally came Joelle L. LaPierre, to me known, who being by me duly sworn, did depose and say: that (s)he resides in Seminole County, State of Florida; that (s)he is the Assistant Vice President of the Companies, the corporations described in and which executed the above instrument; that (s)he knows the seals of the said corporations; that the seals affixed to the said instrument are such corporate seals; that they were so affixed by authority of the Boards of Directors of said corporations and that (s)he signed his/her name thereto by like authority.

Mariluz Arce
My Commission HH 287363
Expires July 13, 2026

I, the undersigned, Assistant Vice President of the Companies, DO HEREBY CERTIFY that the above and foregoing is a true and correct copy of the Power of Attorney executed by said Companies, which is still in full force effective as of April 14, 2026.

Signed and sealed in Lake Mary, Florida.

Keith D. Dozois, Assistant Vice President

TRANSPORTATION SERVICES

DBT Transportation Services

Proposal to City of Lago Vista

AWOS Installation Project
Rusty Allen Airport

RFB# 26AWLAGOV

April 21, 2026

Table of Contents

Cover Letter 2

Scope of Work 3

Buy America Preference 4

Qualifications 4

DBT Airport Services 6

References 7

DBT Current Projects Under Contract 8

DBT Field Service Spare Parts List 9

DBT Financial Statement 10

Cover Letter

Eric De La Cruz, City of Lago Vista

5803 Thunderbird Street

Lago Vista, TX 78645

Dear Mr. De La Cruz,

Thank you for the opportunity to provide a response to the City of Lago Vista's BID for the AWOS Installation Project at the Rusty Allen Airport.

DBT Transportation Services LLC is registered in the State of Texas with a primary office located at 1065 National Drive, Suite 1, Sacramento, CA 95834. DBT Transportation Services has been a legal entity since April 22, 2016, providing and servicing AWOS throughout the US. DBT acquired All Weather Inc in 2017. DBT is now an ADB Safegate company, after being acquired at the end of December 2021.

We look forward to providing the AWOS equipment and service for this project, and to continue doing business with the City of Lago Vista in supporting their Aviation needs.

Any questions or negotiation pertaining to this proposal can be addressed to Michael Trosclair, Sales Manager, via email mtrosclair@DBTtranserv.com or by phone 303-330-7883. I, Nick Haines, am an officer at DBT Transportation Services LLC and have signing authority for all bids and contracts.

Sincerely,

Nick Haines

Nick Haines

CEO

844-343-8328

Nick.Haines@adbsafegate.com

Scope of Work

DBT Transportation Services LLC understands the value that the FAA certified AWOS and airport personnel charged with aviation safety as well as for the pilots and aviation community. The airport equipment serves as informational tools to provide valuable, accurate, real-time information for safe daily flight operations at the Rusty Allen Airport. Top quality systems with reliable equipment can minimize the life-cycle costs of these systems.

Equipment Being Provided:
DBT Transportation F1 Model AWOS III P/T System.

DBT will provide new FAA certified AWOS electronics and sensors. The AWOS system requires specific components in order to operate properly and meet certification requirements. DBT has noted in the bid pricing sheet what items are required to ensure a fully functional and certified AWOS.

Services Being Provided:

FAA NRA Study Application Service
Applicable permits and adherence to all federal, state and local codes
Installation of AWOS Equipment & System Commissioning with the FAA.
Coordination with airport personnel and the FAA.
Site Acceptance Testing
2 Year Warranty, Maintenance and NADIN Weather Data.

DBT will calibrate and test the new AWOS to ensure it is fully functioning. We will coordinate with the FAA for the AWOS system commissioning.

Buy America Preference

The DBT Transportation F1 Model AWOS System meets the FAA Buy America Requirements.

Qualifications

DBT Transportation Services is the leading Maintenance provider for AWOS systems in the country, with an installed base of over 1,000 AWOS nationwide, including:

Texas	90 Systems
Kansas	31 Systems
Minnesota	80 Systems
Wisconsin	40 Systems
Virginia	48 Systems
Georgia	50 Systems
Illinois	37 Systems
Kentucky	21 Systems
North Carolina	43 Systems
Michigan	42 Systems

DBT Transportation Services is backed by a team of professionals with over 40 years of experience in AWOS installation, maintenance, and communications. DBT Transportation Services project managers and technicians have been involved in over 1000 AWOS installations nationwide.

DBT Transportation Services is the premier provider of NADIN communication services for AWOS, a service that we currently provide to nearly 50% of all the non-Federal AWOS in the United States.

DBT Transportation Services is a leading provider of AWOS maintenance services with over 650 maintenance sites nationwide. We offer customized AWOS maintenance programs and specialize in statewide programs aimed toward maximizing the value of each State's weather network. DBT Transportation Services currently manages AWOS maintenance programs for 5 state aviation departments.

DBT Airport Services

DBT's philosophy is that a well-managed, proactive maintenance program provides the best life- cycle management at a reasonable cost. We employ professionals that can diagnose issues with the AWOS system remotely, and ensure we have the right part for repair when our technicians are on site.

DBT technicians are FCC licensed, FAA approved, and manufacturer certified. Below is a list of our field technicians.

First Name	Last Name	FCC Cert.	Factory AWOS Cert.	FAA AWOS Cert.
Josh	Bohm	Y	Y	Y
David	Brumwell	Y	Y	Y
Travas	Burrows	Y	Y	Y
Greg	Earlenbaugh	Y	Y	Y
Jerrad	Fennern	Y	Y	Y
Brian	Findley	Y	Y	Y
Stan	Smith	Y	Y	Y
Tim	Miller	Y	Y	Y
Rosendo (JR)	Rosalez	Y	Y	Y
Lucas	Schultz	Y	Y	Y

References

Company Name	**South Carolina DOT, Division of Aviation**
Address	2553 Airport Boulevard, West Columbia, SC 29170
Contact Person	Gary Siegfried, Airports Program Manager
Phone No.	(803) 896-6898

Product(s) and/or Service(s) Used: Statewide AWOS Installation Program, Statewide AWOS Maintenance Program

Company Name	**Iowa Department of Transportation**
Address	800 Lincoln Way, Ames, IA 50010
Contact Person	Michael Marr, Aeronautics Inspector
Phone No.	(515) 239-1468

Product(s) and/or Service(s) Used: Statewide AWOS Installation Program, Statewide AWOS Maintenance Program

Company Name	**County of Los Angeles**
Address	900 S Freemont, PO BOX 7508, Alhambra, CA 91802
Contact Person	Alvaro Escobedo, Airport Project Coordinator
Phone No.	(818) 896-5271

Product(s) and/or Service(s) Used: county AWOS Installation Program, County AWOS Maintenance Program

The provided references are a sampling of DBT experience. Additional references can be provided upon request.

DBT Current Projects Under Contract

Description and Location	Construction Cost	% Complete	Estimated Comp. Date
AWOS Installation, Picayune, MS	Confidential	100%	Completed June 2022
AWOS Installation, Denver City, TX	Confidential	100%	Completed February 2023
AWOS Installation, Waverly, OH	Confidential	100%	Completed April 2023

DBT Field Service Spare Parts List

Part Number	Quantity	Description
5190-F	1	RH/Temp Probe
M404802	1	A/C Power Interface
M404810	1	CDP PC Interface
M404848-02	1	Data Acqu. Power Supply
7150	1	Duel Baro/Pressure Sensor
M444021	1	Fan 12Volts DC
83395-00	1	Ceilometer Heater
11903	1	Battery Kit for DCP
M404804	1	PCB Assembly for DCP

DBT Financial Statement

DBT Transportation Services produces over six million dollars of annual gross revenue from service. The majority of annual service revenue is generated from AWOS equipment sales and airport maintenance services.

On January 1, 2022, ADB Safegate acquired DBT Transportation Services, which included All Weather Inc.

The financial statements are attached, with the financial condition of the companies estimated to be about the same at this time.

U.S. Department
of Transportation
**Federal Aviation
Administration**

Mike Monroney
Aeronautical Center

P. O. Box 25082
Oklahoma City, OK 73125

June 13, 2023

Nancy Thomsen
DBT Transportation Services LLC
1500 City West Blvd. Suite 550
Houston, Texas 77042

Subject: ECP P501263, Release and Certification of F1STA AWOS, Approval.

References: DBT Transportation Services LLC, ECP P501263, Release and Certification of F1STA AWOS, letter & submittal dated, May 17, 2023.

Advisory Circular 150/5220-16E, Change 1, Automated Weather Observing Systems (AWOS) for Non-Federal Applications, dated January 31, 2019.

Dear Nancy Thomsen:

The Federal Aviation Administration (FAA) has reviewed the subject submission (first reference) requesting FAA approval of this class I ECP. This review was performed in accordance with the criteria found in advisory circular 150/5220-16E, Change 1 (second reference).

Based on the information provided in the referenced ECP, the non-Federal AWOS criteria allocated to this ECP have been satisfactorily addressed.

The documents contained in the following letter (first reference) are hereby approved for use in accordance with advisory circular 150/5220-16E, Change 1 (second reference):

> DBT Transportation Services LLC, ECP P501263, Release and Certification of F1STA AWOS, letter & submittal dated May 17, 2023.

Should you have questions relative to this letter, please contact Stanley Reisman at 405-954-1252.

Sincerely,

Bettie Loudenslager

Bettie Loudenslager,
Manager, Weather Systems Processor and Sensors Team

cc: Natashia Jones, AJW-121
Michael Schoen, AJW-121

ADBSAFE-01 AMYADAV

CERTIFICATE OF LIABILITY INSURANCE

DATE (MM/DD/YYYY) 2/20/2026

THIS CERTIFICATE IS ISSUED AS A MATTER OF INFORMATION ONLY AND CONFERS NO RIGHTS UPON THE CERTIFICATE HOLDER. THIS CERTIFICATE DOES NOT AFFIRMATIVELY OR NEGATIVELY AMEND, EXTEND OR ALTER THE COVERAGE AFFORDED BY THE POLICIES BELOW. THIS CERTIFICATE OF INSURANCE DOES NOT CONSTITUTE A CONTRACT BETWEEN THE ISSUING INSURER(S), AUTHORIZED REPRESENTATIVE OR PRODUCER, AND THE CERTIFICATE HOLDER.

IMPORTANT: If the certificate holder is an ADDITIONAL INSURED, the policy(ies) must have ADDITIONAL INSURED provisions or be endorsed. If SUBROGATION IS WAIVED, subject to the terms and conditions of the policy, certain policies may require an endorsement. A statement on this certificate does not confer rights to the certificate holder in lieu of such endorsement(s).

PRODUCER
Aon Risk Services Northeast, Inc.
One Liberty Plaza
165 Broadway, Suite 3201
New York, NY 10006

CONTACT NAME:
PHONE (A/C, No, Ext):
FAX (A/C, No):
E-MAIL ADDRESS:

INSURER(S) AFFORDING COVERAGE	NAIC #
INSURER A : National Union Fire Ins Co of Pittsburgh	19445
INSURER B : Sentinel Insurance Company, Ltd	11000
INSURER C :	
INSURER D :	
INSURER E :	
INSURER F :	

INSURED
ADB Safegate Americas LLC
700 Science Boulevard
Gahanna, OH 43230

COVERAGES CERTIFICATE NUMBER: REVISION NUMBER:

THIS IS TO CERTIFY THAT THE POLICIES OF INSURANCE LISTED BELOW HAVE BEEN ISSUED TO THE INSURED NAMED ABOVE FOR THE POLICY PERIOD INDICATED. NOTWITHSTANDING ANY REQUIREMENT, TERM OR CONDITION OF ANY CONTRACT OR OTHER DOCUMENT WITH RESPECT TO WHICH THIS CERTIFICATE MAY BE ISSUED OR MAY PERTAIN, THE INSURANCE AFFORDED BY THE POLICIES DESCRIBED HEREIN IS SUBJECT TO ALL THE TERMS, EXCLUSIONS AND CONDITIONS OF SUCH POLICIES. LIMITS SHOWN MAY HAVE BEEN REDUCED BY PAID CLAIMS.

INSR LTR	TYPE OF INSURANCE	ADDL INSD	SUBR WVD	POLICY NUMBER	POLICY EFF (MM/DD/YYYY)	POLICY EXP (MM/DD/YYYY)	LIMITS	
A	X COMMERCIAL GENERAL LIABILITY						EACH OCCURRENCE	$ 1,000,000
	CLAIMS-MADE / X OCCUR			9750804	2/1/2026	2/1/2027	DAMAGE TO RENTED PREMISES (Ea occurrence)	$ 100,000
							MED EXP (Any one person)	$ 10,000
							PERSONAL & ADV INJURY	$ 1,000,000
	GEN'L AGGREGATE LIMIT APPLIES PER:						GENERAL AGGREGATE	$ 1,000,000
	X POLICY / PRO-JECT / LOC						PRODUCTS - COMP/OP AGG	$
	OTHER:							$
B	AUTOMOBILE LIABILITY						COMBINED SINGLE LIMIT (Ea accident)	$ 2,000,000
	X ANY AUTO			10 UEC DL9494	5/1/2025	5/1/2026	BODILY INJURY (Per person)	$
	OWNED AUTOS ONLY / SCHEDULED AUTOS						BODILY INJURY (Per accident)	$
	HIRED AUTOS ONLY / NON-OWNED AUTOS ONLY						PROPERTY DAMAGE (Per accident)	$
	X Comp. Ded. $500 / X Coll. Ded. $1000							$
A	X UMBRELLA LIAB / X OCCUR						EACH OCCURRENCE	$ 9,000,000
	EXCESS LIAB / CLAIMS-MADE			BE012948987	2/1/2026	2/1/2027	AGGREGATE	$ 9,000,000
	DED / X RETENTION $ 10,000							$
	WORKERS COMPENSATION AND EMPLOYERS' LIABILITY						PER STATUTE / OTH-ER	
	ANY PROPRIETOR/PARTNER/EXECUTIVE OFFICER/MEMBER EXCLUDED? (Mandatory in NH) Y / N	N / A					E.L. EACH ACCIDENT	$
	If yes, describe under DESCRIPTION OF OPERATIONS below						E.L. DISEASE - EA EMPLOYEE	$
							E.L. DISEASE - POLICY LIMIT	$

DESCRIPTION OF OPERATIONS / LOCATIONS / VEHICLES (ACORD 101, Additional Remarks Schedule, may be attached if more space is required)
RE: W912DQ-14-D-4009 0001 Repair HVAC, DDC Controls, Lighting, Bldg. 4055. US Army Corps of Engineers is included as Additional Insured in accordance with the policy provisions of the General Liability policy.

CERTIFICATE HOLDER

DBT Transportation Services
1065 National Drive, Suite #1
Sacramento, CA 95834

CANCELLATION

SHOULD ANY OF THE ABOVE DESCRIBED POLICIES BE CANCELLED BEFORE THE EXPIRATION DATE THEREOF, NOTICE WILL BE DELIVERED IN ACCORDANCE WITH THE POLICY PROVISIONS.

AUTHORIZED REPRESENTATIVE
Aon Risk Services Northeast Inc.

© 1988-2015 ACORD CORPORATION. All rights reserved.
The ACORD name and logo are registered marks of ACORD

Form **W-9**
(Rev. March 2024)
Department of the Treasury
Internal Revenue Service

Request for Taxpayer Identification Number and Certification

Go to *www.irs.gov/FormW9* for instructions and the latest information.

Give form to the requester. Do not send to the IRS.

Before you begin. For guidance related to the purpose of Form W-9, see *Purpose of Form*, below.

Print or type. See *Specific Instructions* on page 3.

1 Name of entity/individual. An entry is required. (For a sole proprietor or disregarded entity, enter the owner's name on line 1, and enter the business/disregarded entity's name on line 2.)

DBT Transportations Services LLC

2 Business name/disregarded entity name, if different from above.

3a Check the appropriate box for federal tax classification of the entity/individual whose name is entered on line 1. Check only **one** of the following seven boxes.

☐ Individual/sole proprietor ☐ C corporation ☐ S corporation ☐ Partnership ☐ Trust/estate

☑ LLC. Enter the tax classification (C = C corporation, S = S corporation, P = Partnership) C

Note: Check the "LLC" box above and, in the entry space, enter the appropriate code (C, S, or P) for the tax classification of the LLC, unless it is a disregarded entity. A disregarded entity should instead check the appropriate box for the tax classification of its owner.

☐ Other (see instructions)

3b If on line 3a you checked "Partnership" or "Trust/estate," or checked "LLC" and entered "P" as its tax classification, and you are providing this form to a partnership, trust, or estate in which you have an ownership interest, check this box if you have any foreign partners, owners, or beneficiaries. See instructions . . . . . ☐

4 Exemptions (codes apply only to certain entities, not individuals; see instructions on page 3):

Exempt payee code (if any)

Exemption from Foreign Account Tax Compliance Act (FATCA) reporting code (if any)

(Applies to accounts maintained outside the United States.)

5 Address (number, street, and apt. or suite no.). See instructions.

1065 National Drive, Suite 1

Requester's name and address (optional)

6 City, state, and ZIP code

Sacramento, CA 95834

7 List account number(s) here (optional)

Part I Taxpayer Identification Number (TIN)

Enter your TIN in the appropriate box. The TIN provided must match the name given on line 1 to avoid backup withholding. For individuals, this is generally your social security number (SSN). However, for a resident alien, sole proprietor, or disregarded entity, see the instructions for Part I, later. For other entities, it is your employer identification number (EIN). If you do not have a number, see *How to get a TIN*, later.

Note: If the account is in more than one name, see the instructions for line 1. See also *What Name and Number To Give the Requester* for guidelines on whose number to enter.

Social security number

☐☐☐ - ☐☐ - ☐☐☐☐

or

Employer identification number

8 1 - 2 8 6 5 6 9 9

Part II Certification

Under penalties of perjury, I certify that:

1. The number shown on this form is my correct taxpayer identification number (or I am waiting for a number to be issued to me); and
2. I am not subject to backup withholding because (a) I am exempt from backup withholding, or (b) I have not been notified by the Internal Revenue Service (IRS) that I am subject to backup withholding as a result of a failure to report all interest or dividends, or (c) the IRS has notified me that I am no longer subject to backup withholding; and
3. I am a U.S. citizen or other U.S. person (defined below); and
4. The FATCA code(s) entered on this form (if any) indicating that I am exempt from FATCA reporting is correct.

Certification instructions. You must cross out item 2 above if you have been notified by the IRS that you are currently subject to backup withholding because you have failed to report all interest and dividends on your tax return. For real estate transactions, item 2 does not apply. For mortgage interest paid, acquisition or abandonment of secured property, cancellation of debt, contributions to an individual retirement arrangement (IRA), and, generally, payments other than interest and dividends, you are not required to sign the certification, but you must provide your correct TIN. See the instructions for Part II, later.

Sign Here Signature of U.S. person **Date** 1/4/26

General Instructions

Section references are to the Internal Revenue Code unless otherwise noted.

Future developments. For the latest information about developments related to Form W-9 and its instructions, such as legislation enacted after they were published, go to *www.irs.gov/FormW9*.

What's New

Line 3a has been modified to clarify how a disregarded entity completes this line. An LLC that is a disregarded entity should check the appropriate box for the tax classification of its owner. Otherwise, it should check the "LLC" box and enter its appropriate tax classification.

New line 3b has been added to this form. A flow-through entity is required to complete this line to indicate that it has direct or indirect foreign partners, owners, or beneficiaries when it provides the Form W-9 to another flow-through entity in which it has an ownership interest. This change is intended to provide a flow-through entity with information regarding the status of its indirect foreign partners, owners, or beneficiaries, so that it can satisfy any applicable reporting requirements. For example, a partnership that has any indirect foreign partners may be required to complete Schedules K-2 and K-3. See the Partnership Instructions for Schedules K-2 and K-3 (Form 1065).

Purpose of Form

An individual or entity (Form W-9 requester) who is required to file an information return with the IRS is giving you this form because they

must obtain your correct taxpayer identification number (TIN), which may be your social security number (SSN), individual taxpayer identification number (ITIN), adoption taxpayer identification number (ATIN), or employer identification number (EIN), to report on an information return the amount paid to you, or other amount reportable on an information return. Examples of information returns include, but are not limited to, the following.

- Form 1099-INT (interest earned or paid).
- Form 1099-DIV (dividends, including those from stocks or mutual funds).
- Form 1099-MISC (various types of income, prizes, awards, or gross proceeds).
- Form 1099-NEC (nonemployee compensation).
- Form 1099-B (stock or mutual fund sales and certain other transactions by brokers).
- Form 1099-S (proceeds from real estate transactions).
- Form 1099-K (merchant card and third-party network transactions).
- Form 1098 (home mortgage interest), 1098-E (student loan interest), and 1098-T (tuition).
- Form 1099-C (canceled debt).
- Form 1099-A (acquisition or abandonment of secured property).

Use Form W-9 only if you are a U.S. person (including a resident alien), to provide your correct TIN.

Caution: If you don't return Form W-9 to the requester with a TIN, you might be subject to backup withholding. See *What is backup withholding*, later.

By signing the filled-out form, you:

1. Certify that the TIN you are giving is correct (or you are waiting for a number to be issued);

2. Certify that you are not subject to backup withholding; or

3. Claim exemption from backup withholding if you are a U.S. exempt payee; and

4. Certify to your non-foreign status for purposes of withholding under chapter 3 or 4 of the Code (if applicable); and

5. Certify that FATCA code(s) entered on this form (if any) indicating that you are exempt from the FATCA reporting is correct. See *What Is FATCA Reporting*, later, for further information.

Note: If you are a U.S. person and a requester gives you a form other than Form W-9 to request your TIN, you must use the requester's form if it is substantially similar to this Form W-9.

Definition of a U.S. person. For federal tax purposes, you are considered a U.S. person if you are:

- An individual who is a U.S. citizen or U.S. resident alien;
- A partnership, corporation, company, or association created or organized in the United States or under the laws of the United States;
- An estate (other than a foreign estate); or
- A domestic trust (as defined in Regulations section 301.7701-7).

Establishing U.S. status for purposes of chapter 3 and chapter 4 withholding. Payments made to foreign persons, including certain distributions, allocations of income, or transfers of sales proceeds, may be subject to withholding under chapter 3 or chapter 4 of the Code (sections 1441–1474). Under those rules, if a Form W-9 or other certification of non-foreign status has not been received, a withholding agent, transferee, or partnership (payor) generally applies presumption rules that may require the payor to withhold applicable tax from the recipient, owner, transferor, or partner (payee). See Pub. 515, Withholding of Tax on Nonresident Aliens and Foreign Entities.

The following persons must provide Form W-9 to the payor for purposes of establishing its non-foreign status.

- In the case of a disregarded entity with a U.S. owner, the U.S. owner of the disregarded entity and not the disregarded entity.
- In the case of a grantor trust with a U.S. grantor or other U.S. owner, generally, the U.S. grantor or other U.S. owner of the grantor trust and not the grantor trust.
- In the case of a U.S. trust (other than a grantor trust), the U.S. trust and not the beneficiaries of the trust.

See Pub. 515 for more information on providing a Form W-9 or a certification of non-foreign status to avoid withholding.

Foreign person. If you are a foreign person or the U.S. branch of a foreign bank that has elected to be treated as a U.S. person (under Regulations section 1.1441-1(b)(2)(iv) or other applicable section for chapter 3 or 4 purposes), do not use Form W-9. Instead, use the appropriate Form W-8 or Form 8233 (see Pub. 515). If you are a qualified foreign pension fund under Regulations section 1.897(l)-1(d), or a partnership that is wholly owned by qualified foreign pension funds, that is treated as a non-foreign person for purposes of section 1445 withholding, do not use Form W-9. Instead, use Form W-8EXP (or other certification of non-foreign status).

Nonresident alien who becomes a resident alien. Generally, only a nonresident alien individual may use the terms of a tax treaty to reduce or eliminate U.S. tax on certain types of income. However, most tax treaties contain a provision known as a saving clause. Exceptions specified in the saving clause may permit an exemption from tax to continue for certain types of income even after the payee has otherwise become a U.S. resident alien for tax purposes.

If you are a U.S. resident alien who is relying on an exception contained in the saving clause of a tax treaty to claim an exemption from U.S. tax on certain types of income, you must attach a statement to Form W-9 that specifies the following five items.

1. The treaty country. Generally, this must be the same treaty under which you claimed exemption from tax as a nonresident alien.

2. The treaty article addressing the income.

3. The article number (or location) in the tax treaty that contains the saving clause and its exceptions.

4. The type and amount of income that qualifies for the exemption from tax.

5. Sufficient facts to justify the exemption from tax under the terms of the treaty article.

Example. Article 20 of the U.S.-China income tax treaty allows an exemption from tax for scholarship income received by a Chinese student temporarily present in the United States. Under U.S. law, this student will become a resident alien for tax purposes if their stay in the United States exceeds 5 calendar years. However, paragraph 2 of the first Protocol to the U.S.-China treaty (dated April 30, 1984) allows the provisions of Article 20 to continue to apply even after the Chinese student becomes a resident alien of the United States. A Chinese student who qualifies for this exception (under paragraph 2 of the first Protocol) and is relying on this exception to claim an exemption from tax on their scholarship or fellowship income would attach to Form W-9 a statement that includes the information described above to support that exemption.

If you are a nonresident alien or a foreign entity, give the requester the appropriate completed Form W-8 or Form 8233.

Backup Withholding

What is backup withholding? Persons making certain payments to you must under certain conditions withhold and pay to the IRS 24% of such payments. This is called "backup withholding." Payments that may be subject to backup withholding include, but are not limited to, interest, tax-exempt interest, dividends, broker and barter exchange transactions, rents, royalties, nonemployee pay, payments made in settlement of payment card and third-party network transactions, and certain payments from fishing boat operators. Real estate transactions are not subject to backup withholding.

You will not be subject to backup withholding on payments you receive if you give the requester your correct TIN, make the proper certifications, and report all your taxable interest and dividends on your tax return.

Payments you receive will be subject to backup withholding if:

1. You do not furnish your TIN to the requester;

2. You do not certify your TIN when required (see the instructions for Part II for details);

3. The IRS tells the requester that you furnished an incorrect TIN;

4. The IRS tells you that you are subject to backup withholding because you did not report all your interest and dividends on your tax return (for reportable interest and dividends only); or

5. You do not certify to the requester that you are not subject to backup withholding, as described in item 4 under *"By signing the filled-out form"* above (for reportable interest and dividend accounts opened after 1983 only).

Certain payees and payments are exempt from backup withholding. See *Exempt payee code*, later, and the separate Instructions for the Requester of Form W-9 for more information.

See also *Establishing U.S. status for purposes of chapter 3 and chapter 4 withholding*, earlier.

What Is FATCA Reporting?

The Foreign Account Tax Compliance Act (FATCA) requires a participating foreign financial institution to report all U.S. account holders that are specified U.S. persons. Certain payees are exempt from FATCA reporting. See *Exemption from FATCA reporting code*, later, and the Instructions for the Requester of Form W-9 for more information.

Updating Your Information

You must provide updated information to any person to whom you claimed to be an exempt payee if you are no longer an exempt payee and anticipate receiving reportable payments in the future from this person. For example, you may need to provide updated information if you are a C corporation that elects to be an S corporation, or if you are no longer tax exempt. In addition, you must furnish a new Form W-9 if the name or TIN changes for the account, for example, if the grantor of a grantor trust dies.

Penalties

Failure to furnish TIN. If you fail to furnish your correct TIN to a requester, you are subject to a penalty of $50 for each such failure unless your failure is due to reasonable cause and not to willful neglect.

Civil penalty for false information with respect to withholding. If you make a false statement with no reasonable basis that results in no backup withholding, you are subject to a $500 penalty.

Criminal penalty for falsifying information. Willfully falsifying certifications or affirmations may subject you to criminal penalties including fines and/or imprisonment.

Misuse of TINs. If the requester discloses or uses TINs in violation of federal law, the requester may be subject to civil and criminal penalties.

Specific Instructions

Line 1

You must enter one of the following on this line; **do not** leave this line blank. The name should match the name on your tax return.

If this Form W-9 is for a joint account (other than an account maintained by a foreign financial institution (FFI)), list first, and then circle, the name of the person or entity whose number you entered in Part I of Form W-9. If you are providing Form W-9 to an FFI to document a joint account, each holder of the account that is a U.S. person must provide a Form W-9.

• **Individual.** Generally, enter the name shown on your tax return. If you have changed your last name without informing the Social Security Administration (SSA) of the name change, enter your first name, the last name as shown on your social security card, and your new last name.

Note for ITIN applicant: Enter your individual name as it was entered on your Form W-7 application, line 1a. This should also be the same as the name you entered on the Form 1040 you filed with your application.

• **Sole proprietor.** Enter your individual name as shown on your Form 1040 on line 1. Enter your business, trade, or "doing business as" (DBA) name on line 2.

• **Partnership, C corporation, S corporation, or LLC, other than a disregarded entity.** Enter the entity's name as shown on the entity's tax return on line 1 and any business, trade, or DBA name on line 2.

• **Other entities.** Enter your name as shown on required U.S. federal tax documents on line 1. This name should match the name shown on the charter or other legal document creating the entity. Enter any business, trade, or DBA name on line 2.

• **Disregarded entity.** In general, a business entity that has a single owner, including an LLC, and is not a corporation, is disregarded as an entity separate from its owner (a disregarded entity). See Regulations section 301.7701-2(c)(2). A disregarded entity should check the appropriate box for the tax classification of its owner. Enter the owner's name on line 1. The name of the owner entered on line 1 should never be a disregarded entity. The name on line 1 should be the name shown on the income tax return on which the income should be reported. For example, if a foreign LLC that is treated as a disregarded entity for U.S. federal tax purposes has a single owner that is a U.S. person, the U.S. owner's name is required to be provided on line 1. If the direct owner of the entity is also a disregarded entity, enter the first owner that is not disregarded for federal tax purposes. Enter the disregarded entity's name on line 2. If the owner of the disregarded entity is a foreign person, the owner must complete an appropriate Form W-8 instead of a Form W-9. This is the case even if the foreign person has a U.S. TIN.

Line 2

If you have a business name, trade name, DBA name, or disregarded entity name, enter it on line 2.

Line 3a

Check the appropriate box on line 3a for the U.S. federal tax classification of the person whose name is entered on line 1. Check only one box on line 3a.

IF the entity/individual on line 1 is a(n) . . .	THEN check the box for . . .
• Corporation	Corporation.
• Individual or • Sole proprietorship	Individual/sole proprietor.
• LLC classified as a partnership for U.S. federal tax purposes or • LLC that has filed Form 8832 or 2553 electing to be taxed as a corporation	Limited liability company and enter the appropriate tax classification: P = Partnership, C = C corporation, or S = S corporation.
• Partnership	Partnership.
• Trust/estate	Trust/estate.

Line 3b

Check this box if you are a partnership (including an LLC classified as a partnership for U.S. federal tax purposes), trust, or estate that has any foreign partners, owners, or beneficiaries, and you are providing this form to a partnership, trust, or estate, in which you have an ownership interest. You must check the box on line 3b if you receive a Form W-8 (or documentary evidence) from any partner, owner, or beneficiary establishing foreign status or if you receive a Form W-9 from any partner, owner, or beneficiary that has checked the box on line 3b.

Note: A partnership that provides a Form W-9 and checks box 3b may be required to complete Schedules K-2 and K-3 (Form 1065). For more information, see the Partnership Instructions for Schedules K-2 and K-3 (Form 1065).

If you are required to complete line 3b but fail to do so, you may not receive the information necessary to file a correct information return with the IRS or furnish a correct payee statement to your partners or beneficiaries. See, for example, sections 6698, 6722, and 6724 for penalties that may apply.

Line 4 Exemptions

If you are exempt from backup withholding and/or FATCA reporting, enter in the appropriate space on line 4 any code(s) that may apply to you.

Exempt payee code.

• Generally, individuals (including sole proprietors) are not exempt from backup withholding.

• Except as provided below, corporations are exempt from backup withholding for certain payments, including interest and dividends.

• Corporations are not exempt from backup withholding for payments made in settlement of payment card or third-party network transactions.

• Corporations are not exempt from backup withholding with respect to attorneys' fees or gross proceeds paid to attorneys, and corporations that provide medical or health care services are not exempt with respect to payments reportable on Form 1099-MISC.

The following codes identify payees that are exempt from backup withholding. Enter the appropriate code in the space on line 4.

1—An organization exempt from tax under section 501(a), any IRA, or a custodial account under section 403(b)(7) if the account satisfies the requirements of section 401(f)(2).

2—The United States or any of its agencies or instrumentalities.

3—A state, the District of Columbia, a U.S. commonwealth or territory, or any of their political subdivisions or instrumentalities.

4—A foreign government or any of its political subdivisions, agencies, or instrumentalities.

5—A corporation.

6—A dealer in securities or commodities required to register in the United States, the District of Columbia, or a U.S. commonwealth or territory.

7—A futures commission merchant registered with the Commodity Futures Trading Commission.

8—A real estate investment trust.

9—An entity registered at all times during the tax year under the Investment Company Act of 1940.

10—A common trust fund operated by a bank under section 584(a).

11—A financial institution as defined under section 581.

12—A middleman known in the investment community as a nominee or custodian.

13—A trust exempt from tax under section 664 or described in section 4947.

The following chart shows types of payments that may be exempt from backup withholding. The chart applies to the exempt payees listed above, 1 through 13.

IF the payment is for . . .	THEN the payment is exempt for . . .
• Interest and dividend payments	All exempt payees except for 7.
• Broker transactions	Exempt payees 1 through 4 and 6 through 11 and all C corporations. S corporations must not enter an exempt payee code because they are exempt only for sales of noncovered securities acquired prior to 2012.
• Barter exchange transactions and patronage dividends	Exempt payees 1 through 4.
• Payments over $600 required to be reported and direct sales over $5,000[1]	Generally, exempt payees 1 through 5.[2]
• Payments made in settlement of payment card or third-party network transactions	Exempt payees 1 through 4.

[1] See Form 1099-MISC, Miscellaneous Information, and its instructions.

[2] However, the following payments made to a corporation and reportable on Form 1099-MISC are not exempt from backup withholding: medical and health care payments, attorneys' fees, gross proceeds paid to an attorney reportable under section 6045(f), and payments for services paid by a federal executive agency.

Exemption from FATCA reporting code. The following codes identify payees that are exempt from reporting under FATCA. These codes apply to persons submitting this form for accounts maintained outside of the United States by certain foreign financial institutions. Therefore, if you are only submitting this form for an account you hold in the United States, you may leave this field blank. Consult with the person requesting this form if you are uncertain if the financial institution is subject to these requirements. A requester may indicate that a code is not required by providing you with a Form W-9 with "Not Applicable" (or any similar indication) entered on the line for a FATCA exemption code.

A—An organization exempt from tax under section 501(a) or any individual retirement plan as defined in section 7701(a)(37).

B—The United States or any of its agencies or instrumentalities.

C—A state, the District of Columbia, a U.S. commonwealth or territory, or any of their political subdivisions or instrumentalities.

D—A corporation the stock of which is regularly traded on one or more established securities markets, as described in Regulations section 1.1472-1(c)(1)(i).

E—A corporation that is a member of the same expanded affiliated group as a corporation described in Regulations section 1.1472-1(c)(1)(i).

F—A dealer in securities, commodities, or derivative financial instruments (including notional principal contracts, futures, forwards, and options) that is registered as such under the laws of the United States or any state.

G—A real estate investment trust.

H—A regulated investment company as defined in section 851 or an entity registered at all times during the tax year under the Investment Company Act of 1940.

I—A common trust fund as defined in section 584(a).

J—A bank as defined in section 581.

K—A broker.

L—A trust exempt from tax under section 664 or described in section 4947(a)(1).

M—A tax-exempt trust under a section 403(b) plan or section 457(g) plan.

Note: You may wish to consult with the financial institution requesting this form to determine whether the FATCA code and/or exempt payee code should be completed.

Line 5

Enter your address (number, street, and apartment or suite number). This is where the requester of this Form W-9 will mail your information returns. If this address differs from the one the requester already has on file, enter "NEW" at the top. If a new address is provided, there is still a chance the old address will be used until the payor changes your address in their records.

Line 6

Enter your city, state, and ZIP code.

Part I. Taxpayer Identification Number (TIN)

Enter your TIN in the appropriate box. If you are a resident alien and you do not have, and are not eligible to get, an SSN, your TIN is your IRS ITIN. Enter it in the entry space for the Social security number. If you do not have an ITIN, see *How to get a TIN* below.

If you are a sole proprietor and you have an EIN, you may enter either your SSN or EIN.

If you are a single-member LLC that is disregarded as an entity separate from its owner, enter the owner's SSN (or EIN, if the owner has one). If the LLC is classified as a corporation or partnership, enter the entity's EIN.

Note: See *What Name and Number To Give the Requester*, later, for further clarification of name and TIN combinations.

How to get a TIN. If you do not have a TIN, apply for one immediately. To apply for an SSN, get Form SS-5, Application for a Social Security Card, from your local SSA office or get this form online at *www.SSA.gov*. You may also get this form by calling 800-772-1213. Use Form W-7, Application for IRS Individual Taxpayer Identification Number, to apply for an ITIN, or Form SS-4, Application for Employer Identification Number, to apply for an EIN. You can apply for an EIN online by accessing the IRS website at *www.irs.gov/EIN*. Go to *www.irs.gov/Forms* to view, download, or print Form W-7 and/or Form SS-4. Or, you can go to *www.irs.gov/OrderForms* to place an order and have Form W-7 and/or Form SS-4 mailed to you within 15 business days.

If you are asked to complete Form W-9 but do not have a TIN, apply for a TIN and enter "Applied For" in the space for the TIN, sign and date the form, and give it to the requester. For interest and dividend payments, and certain payments made with respect to readily tradable instruments, you will generally have 60 days to get a TIN and give it to the requester before you are subject to backup withholding on payments. The 60-day rule does not apply to other types of payments. You will be subject to backup withholding on all such payments until you provide your TIN to the requester.

Note: Entering "Applied For" means that you have already applied for a TIN or that you intend to apply for one soon. See also *Establishing U.S. status for purposes of chapter 3 and chapter 4 withholding*, earlier, for when you may instead be subject to withholding under chapter 3 or 4 of the Code.

Caution: A disregarded U.S. entity that has a foreign owner must use the appropriate Form W-8.

Part II. Certification

To establish to the withholding agent that you are a U.S. person, or resident alien, sign Form W-9. You may be requested to sign by the withholding agent even if item 1, 4, or 5 below indicates otherwise.

For a joint account, only the person whose TIN is shown in Part I should sign (when required). In the case of a disregarded entity, the person identified on line 1 must sign. Exempt payees, see *Exempt payee code*, earlier.

Signature requirements. Complete the certification as indicated in items 1 through 5 below.

1. Interest, dividend, and barter exchange accounts opened before 1984 and broker accounts considered active during 1983. You must give your correct TIN, but you do not have to sign the certification.

2. Interest, dividend, broker, and barter exchange accounts opened after 1983 and broker accounts considered inactive during 1983. You must sign the certification or backup withholding will apply. If you are subject to backup withholding and you are merely providing your correct TIN to the requester, you must cross out item 2 in the certification before signing the form.

3. Real estate transactions. You must sign the certification. You may cross out item 2 of the certification.

4. Other payments. You must give your correct TIN, but you do not have to sign the certification unless you have been notified that you have previously given an incorrect TIN. "Other payments" include payments made in the course of the requester's trade or business for rents, royalties, goods (other than bills for merchandise), medical and health care services (including payments to corporations), payments to a nonemployee for services, payments made in settlement of payment card and third-party network transactions, payments to certain fishing boat crew members and fishermen, and gross proceeds paid to attorneys (including payments to corporations).

5. Mortgage interest paid by you, acquisition or abandonment of secured property, cancellation of debt, qualified tuition program payments (under section 529), ABLE accounts (under section 529A), IRA, Coverdell ESA, Archer MSA or HSA contributions or distributions, and pension distributions. You must give your correct TIN, but you do not have to sign the certification.

What Name and Number To Give the Requester

For this type of account:	Give name and SSN of:
1. Individual	The individual
2. Two or more individuals (joint account) other than an account maintained by an FFI	The actual owner of the account or, if combined funds, the first individual on the account[1]
3. Two or more U.S. persons (joint account maintained by an FFI)	Each holder of the account
4. Custodial account of a minor (Uniform Gift to Minors Act)	The minor[2]
5. a. The usual revocable savings trust (grantor is also trustee)	The grantor-trustee[1]
b. So-called trust account that is not a legal or valid trust under state law	The actual owner[1]
6. Sole proprietorship or disregarded entity owned by an individual	The owner[3]
7. Grantor trust filing under Optional Filing Method 1 (see Regulations section 1.671-4(b)(2)(i)(A))**	The grantor*
8. Disregarded entity not owned by an individual	The owner
9. A valid trust, estate, or pension trust	Legal entity[4]
10. Corporation or LLC electing corporate status on Form 8832 or Form 2553	The corporation
11. Association, club, religious, charitable, educational, or other tax-exempt organization	The organization
12. Partnership or multi-member LLC	The partnership
13. A broker or registered nominee	The broker or nominee
14. Account with the Department of Agriculture in the name of a public entity (such as a state or local government, school district, or prison) that receives agricultural program payments	The public entity
15. Grantor trust filing Form 1041 or under the Optional Filing Method 2, requiring Form 1099 (see Regulations section 1.671-4(b)(2)(i)(B))**	The trust

[1] List first and circle the name of the person whose number you furnish. If only one person on a joint account has an SSN, that person's number must be furnished.

[2] Circle the minor's name and furnish the minor's SSN.

[3] You must show your individual name on line 1, and enter your business or DBA name, if any, on line 2. You may use either your SSN or EIN (if you have one), but the IRS encourages you to use your SSN.

[4] List first and circle the name of the trust, estate, or pension trust. (Do not furnish the TIN of the personal representative or trustee unless the legal entity itself is not designated in the account title.)

***Note:** The grantor must also provide a Form W-9 to the trustee of the trust.

** For more information on optional filing methods for grantor trusts, see the Instructions for Form 1041.

Note: If no name is circled when more than one name is listed, the number will be considered to be that of the first name listed.

Secure Your Tax Records From Identity Theft

Identity theft occurs when someone uses your personal information, such as your name, SSN, or other identifying information, without your permission to commit fraud or other crimes. An identity thief may use your SSN to get a job or may file a tax return using your SSN to receive a refund.

To reduce your risk:

- Protect your SSN,
- Ensure your employer is protecting your SSN, and
- Be careful when choosing a tax return preparer.

If your tax records are affected by identity theft and you receive a notice from the IRS, respond right away to the name and phone number printed on the IRS notice or letter.

If your tax records are not currently affected by identity theft but you think you are at risk due to a lost or stolen purse or wallet, questionable credit card activity, or a questionable credit report, contact the IRS Identity Theft Hotline at 800-908-4490 or submit Form 14039.

For more information, see Pub. 5027, Identity Theft Information for Taxpayers.

Victims of identity theft who are experiencing economic harm or a systemic problem, or are seeking help in resolving tax problems that have not been resolved through normal channels, may be eligible for Taxpayer Advocate Service (TAS) assistance. You can reach TAS by calling the TAS toll-free case intake line at 877-777-4778 or TTY/TDD 800-829-4059.

Protect yourself from suspicious emails or phishing schemes. Phishing is the creation and use of email and websites designed to mimic legitimate business emails and websites. The most common act is sending an email to a user falsely claiming to be an established legitimate enterprise in an attempt to scam the user into surrendering private information that will be used for identity theft.

The IRS does not initiate contacts with taxpayers via emails. Also, the IRS does not request personal detailed information through email or ask taxpayers for the PIN numbers, passwords, or similar secret access information for their credit card, bank, or other financial accounts.

If you receive an unsolicited email claiming to be from the IRS, forward this message to *phishing@irs.gov*. You may also report misuse of the IRS name, logo, or other IRS property to the Treasury Inspector General for Tax Administration (TIGTA) at 800-366-4484. You can forward suspicious emails to the Federal Trade Commission at *spam@uce.gov* or report them at *www.ftc.gov/complaint*. You can contact the FTC at *www.ftc.gov/idtheft* or 877-IDTHEFT (877-438-4338). If you have been the victim of identity theft, see *www.IdentityTheft.gov* and Pub. 5027.

Go to *www.irs.gov/IdentityTheft* to learn more about identity theft and how to reduce your risk.

Privacy Act Notice

Section 6109 of the Internal Revenue Code requires you to provide your correct TIN to persons (including federal agencies) who are required to file information returns with the IRS to report interest, dividends, or certain other income paid to you; mortgage interest you paid; the acquisition or abandonment of secured property; the cancellation of debt; or contributions you made to an IRA, Archer MSA, or HSA. The person collecting this form uses the information on the form to file information returns with the IRS, reporting the above information. Routine uses of this information include giving it to the Department of Justice for civil and criminal litigation and to cities, states, the District of Columbia, and U.S. commonwealths and territories for use in administering their laws. The information may also be disclosed to other countries under a treaty, to federal and state agencies to enforce civil and criminal laws, or to federal law enforcement and intelligence agencies to combat terrorism. You must provide your TIN whether or not you are required to file a tax return. Under section 3406, payors must generally withhold a percentage of taxable interest, dividends, and certain other payments to a payee who does not give a TIN to the payor. Certain penalties may also apply for providing false or fraudulent information.

TRANSPORTATION SERVICES

Rosendo "J.R." Rosalez

Field Service Engineer

Professional Experience Summary

35 years' experience in field service, installation and repair of electronics and electrical systems.

2016- Present	Field Service Engineer, DBT Transportation Services LLC
2010-2016	Field Support Engineer, Vaisala, Inc.
2007-2009	Field Support Specialist, Quixote Transportation Technologies, Inc.
1981-2007	United States Air Force / Avionics Technician / Aircraft Maintenance Production Supervisor

Additional Skills

- Direct customer interaction and support of electronics and electrical equipment to include building and troubleshooting down to component level of AC/DC circuits.
- Comprehensive knowledge and usage of technical manuals, blueprints and schematics provide ability to troubleshoot, disassemble, repair and maintain complex electronics systems.
- Knowledgeable of the principles of electricity and formulas for Three Phase and Single Phase circuits.
- Experienced with DOS and Windows operating systems, computer programming and networking technologies.
- Qualified for tower climbing and maintenance and operation of hydraulic and aerial lift equipment.
- Proven ability to quickly resolve complex hardware/software and equipment malfunctions in a fast-paced high-stress environment under adverse weather conditions.

Academic Background

Associates Degree in Applied Science Avionics Systems Technology, United States Air Force Community College- University Of Maryland

Responsibilities with Vaisala, Inc.

- Install, maintain and repair of Vaisala, Nu-Metrics brand products, RWIS and AWOS stations
- Customer support for RWIS and AWOS stations
- Maintain a status report and provide to customer for DFW Intl Airport RWIS stations.
- Provide technical assistance to internal employees and sub-contractors.

Cut Along This Line

UNITED STATES OF AMERICA
FEDERAL COMMUNICATIONS COMMISSION

General Radiotelephone Operator License

ROSALEZ, ROSENDO
3603 FIELDTHORNE CT
KATY, TX 77450

Licensee: This is your radio authorization in sizes suitable for your wallet and for framing. Carefully cut the documents along the lines as indicated and sign immediately upon receipt. They are not valid until signed.

The Commission suggests that the wallet size version be laminated (or another similar document protection process) after signing. The Commission has found, under certain circumstances, laser print is subject to displacement.

Cut Along This Line

FCC Registration Number (FRN): 0020662953

Special Conditions / Endorsements

This license confers authority to operate licensed radio stations in the Aviation, Marine and International Fixed Public Radio Services only. This license does not confer any authority to operate broadcast stations. It is not assignable or transferable. Refer to CFR Title 47 Section 13.7(c)(5).

Grant Date	Effective Date	Print Date	Expiration Date
03-07-2011	03-07-2011	03-08-2011	

File Number	Serial Number	Date of Birth
0004642844	PG00033232	12-17-1961

THIS LICENSE IS NOT TRANSFERABLE

(Licensee's Signature)

FCC 605-FRC - May 2007

Cut Along This Line

Cut Along This Line

Cut Along This Line

Serial Number	Grant Date	Expiration Date	File Number	Print Date	Effective Date
PG00033232	03-07-2011		0004642844	03-08-2011	03-07-2011

Date of Birth 12-17-1961

FCC Registration Number (FRN) 0020662953

ROSALEZ, ROSENDO
3603 FIELDTHORNE CT
KATY, TX 77450

General Radiotelephone Operator License

FCC 605-FRC - May 2007

Fold Here

THIS LICENSE IS NOT TRANSFERABLE

Special Conditions / Endorsements:

This license confers authority to operate licensed radio stations in the Aviation, Marine and International Fixed Public Radio Services only. This license does not confer any authority to operate broadcast stations. It is not assignable or transferable. Refer to CFR Title 47 Section 13.7(c)(5).

(Licensee's Signature)

FEDERAL COMMUNICATIONS COMMISSION

Cut Along This Line

Cut Along This Line

TRANSPORTATION SERVICES

CERTIFICATE

This is to certify that

JR Rosalez

Has successfully completed the factory training program F1STA-046 as specified in FAA Advisory Circular 150/5220-16 and FAA Type Certification Letter for the

DBT F1STA AWOS

From 29-30 2023 June 2023

Sacramento, California USA, 14 July 2023

Nancy J Thomsen

Nancy Thomsen
Chief Operating Officer
DBT Transportation Services

Non-federal Program Exam Cover Sheet for Non-federally Employed Maintenance Technicians

EXAMINEE INFORMATION

Exam ID/Title:	DBT F1STA Exam	**Date:**	10-04-2023
Examinee Name:	Rosendo Rosalez	**Time:**	1515

EXAMINER INFORMATION

Examining Office Name:	HOU TSC	**Routing Code:**	WC22G

Examiner Name:	John Richards
Supervisor Name:	Clifford Wilson
Supervisor Title:	

SYSTEM INFORMATION

Manufacturer:	DBT		
Type:	AWOS 3PT	**Model:**	F1STA

Airport Name:	EBG South Texas International Airport
System on Airport? Y or N	
Location (City, State):	Edinburg, TX

EXAM RESULTS

Total No.:	15	**No. Correct:**	15	**% Correct:**	100
Total Time:	1 hour, 15 minutes	**Pass/Fail:**	Pass		

OPERATIONS SUPPORT STAFF

Training Specialist Name:		**Routing Code:**	

SIGNATURES

Examiner's Supervisor Signature/Date: _____

Examiner's Signature/Date: John D. Richards 10-05-2023

OSS Training Specialist Signature/Date: _____

TRANSPORTATION SERVICES

Lucas Schultz

Field Service Engineer

Contact Information

lucas.j.schultz@gmail.com
(512) 956-2966

Work Experience

DBT Transportation Services LLC, Lafayette, CO
Field Service Engineer
2016 - present
Highly skilled FAA and FCC certified technician. Capable of servicing ILS, DME, VOR's, AWOS and Control Tower systems.

Vaisala Inc., Louisville, CO
Field Service Engineer
08.2006 - 2016
Highly trustworthy self-starting remote individual with a large territory of coverage. Knowledgeable of multiple unique FAA certified equipment & FAA Orders involved with maintenance & installation.

United States Navy – Second Class Petty Officer
Aviation Ordnanceman
09.1999 – 09.2003
Hands on repairs and inspection of various electronic and mechanical aircraft components while self-learning from publications to complete each task.

Education

B.I.T. in Computer Systems – Summa Cum Laude
American InterContinental University
A.A. in Business Administration – With Honors
American InterContinental University

Certifications

General Radios Operators License (GROL)
FAA Automated Weather Observing System (AWOS)
FAA Non Directional Beacon (NDB)

Non-federal Program Exam Cover Sheet for Non-federally Employed Maintenance Technicians

EXAMINEE INFORMATION

Exam ID/Title:	DBT F1 STA Exam	**Date:**	10-04-2023
Examinee Name:	Lucas Shultz	**Time:**	1345

EXAMINER INFORMATION

Examining Office Name:	HOU TSC	**Routing Code:**	WC22G

Examiner Name:	John Richards
Supervisor Name:	Clifford Wilson
Supervisor Title:	

SYSTEM INFORMATION

Manufacturer:	DBT		
Type:	AWOS 3 PT	**Model:**	F1 STA

Airport Name:	EBG South Texas International Airport
System on Airport? Y or N	
Location (City, State):	Edinburg, TX

EXAM RESULTS

Total No.:	15	**No. Correct:**	15	**% Correct:**	100
Total Time:	1 hour, 15 minutes	**Pass/Fail:**	Pass		

OPERATIONS SUPPORT STAFF

Training Specialist Name:		**Routing Code:**	

SIGNATURES

Examiner's Supervisor Signature/Date: _____

Examiner's Signature/Date: John D Richards 10-05-2023

OSS Training Specialist Signature/Date: _____

Serial Number	Grant Date	Expiration Date	File Number	Print Date	Effective Date
PG00020117	11-21-2006		0002826214	11-22-2006	11-21-2006

Date of Birth	FCC Registration Number (FRN)
12-20-1980	0015757966

SCHULTZ, LUCAS J
2743 S HEIGHTS DR NW
COON RAPIDS MN 55433

General Radiotelephone Operator License

FCC 605-FRC April 2002

HERE

FOLD

THIS LICENSE IS NOT TRANSFERABLE.

SPECIAL CONDITIONS/ENDORSEMENTS:

This license does not confer any authority to operate Broadcast stations. Refer to CFR Title 47 Section 13.7 c)5.

(Licensee's Signature)

FEDERAL COMMUNICATIONS COMMISSION

DBT
TRANSPORTATION SERVICES

CERTIFICATE

This is to certify that

Lucas Schultz

Has successfully completed the factory training program F1STA-046 as specified in FAA Advisory Circular 150/5220-16 and FAA Type Certification Letter for the

DBT F1STA AWOS

From 29-30 2023 June 2023

Sacramento, California USA, 14 July 2023

Nancy J Thomsen

Nancy Thomsen
Chief Operating Officer
DBT Transportation Services

ADB SAFEGATE Structure Chart

certified on 17/07/2023

Nancy Van Campenhout
Legal and Compliance Director

Nancy Van Campenhout

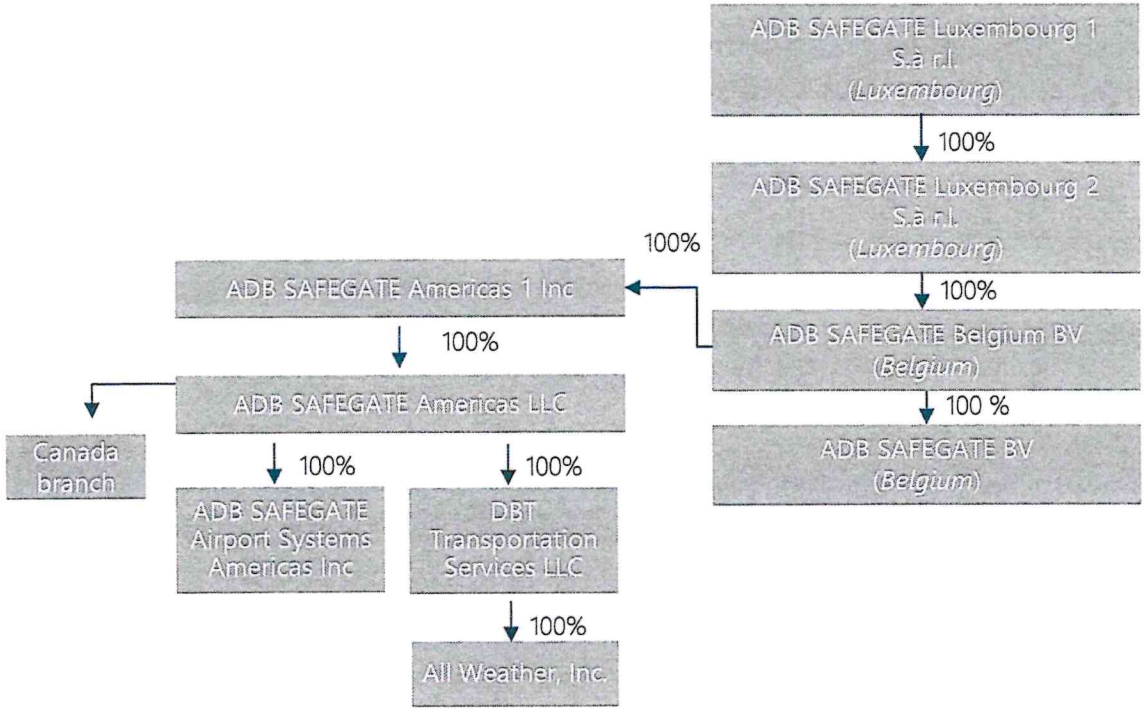

ADB SAFEGATE

© 2019 ADB SAFEGATE. All Rights Reserved.

Nancy Van Campenhout
Legal and Compliance Director

certified on 17/07/2023
Nancy Van Campenhout

ADB SAFEGATE Structure Chart

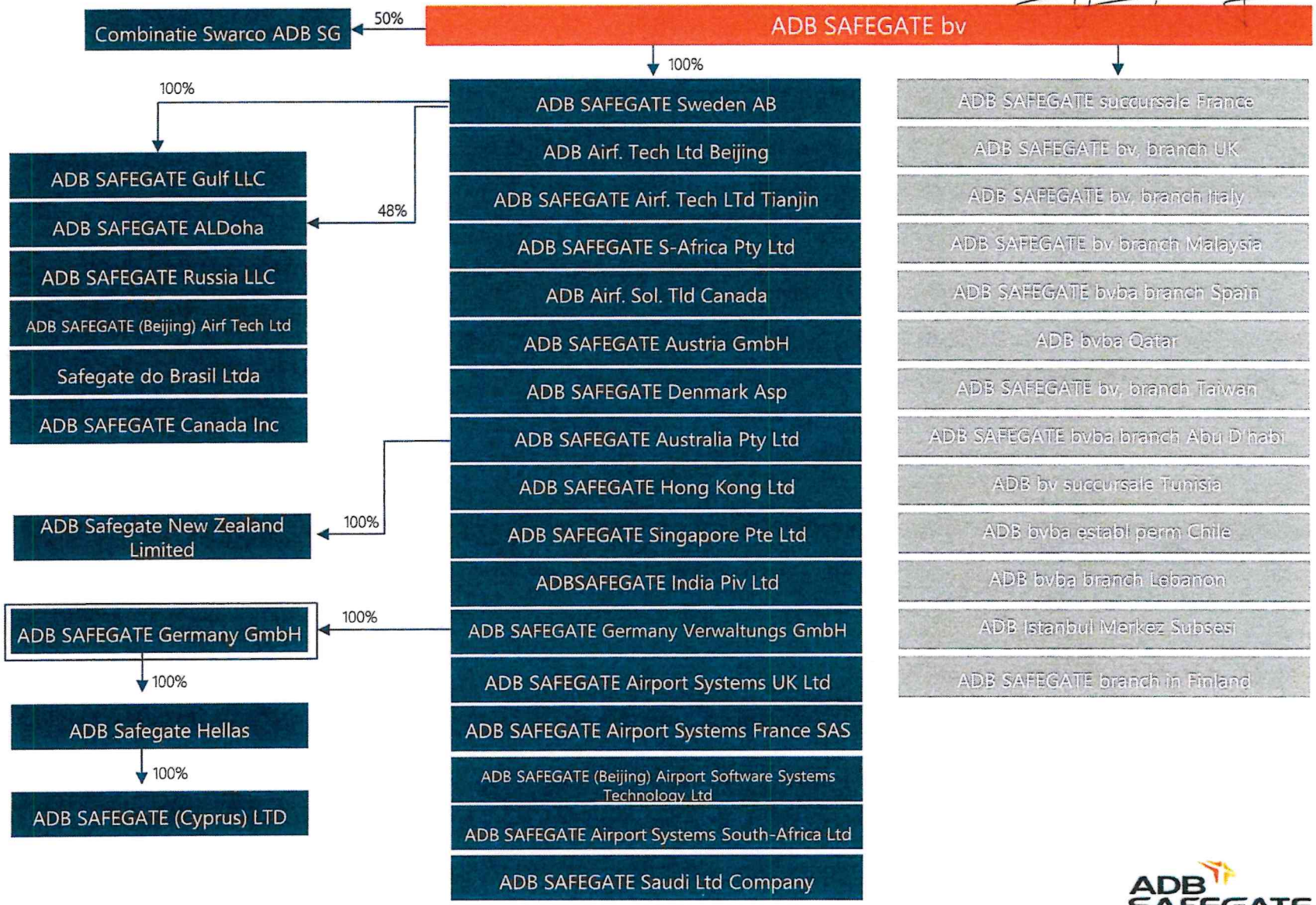

ADB SAFEGATE

ADB SAFEGATE

ADB Safegate Luxembourg 1 S.à r.l.

R.C.S. Luxembourg B 217.137

with a share capital of EUR 466.500.000

14-16 Avenue Pasteur • L-2310 Luxembourg

Consolidated Financial Statements

Consolidated financial statements for the financial year ended December 31, 2023 (with the report of the réviseur d'entreprises agréé thereon)

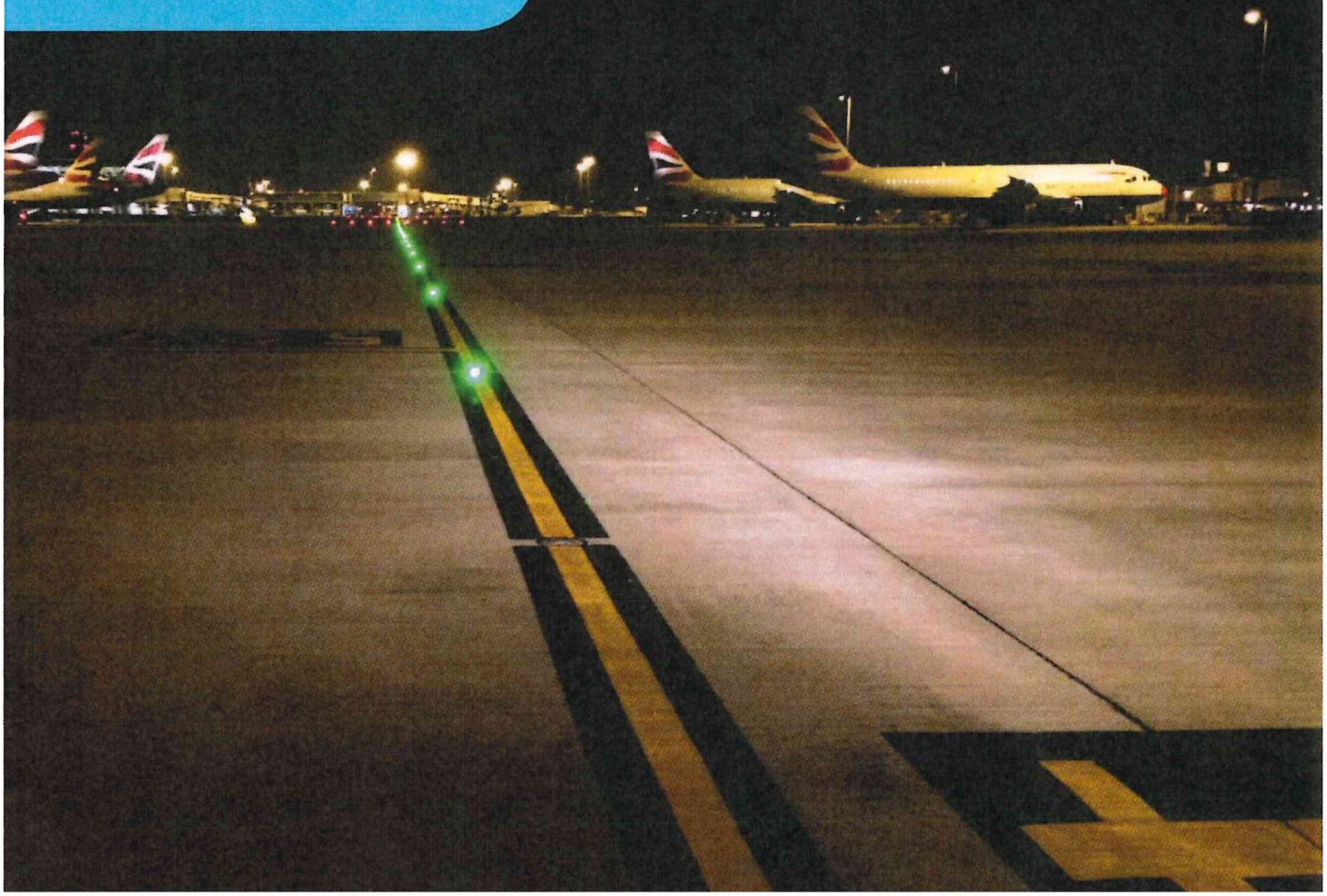

Table of Contents

Table of Contents 2

Management report 4

Report of the Réviseur d'entreprises agréé 9

Consolidated statement of profit or loss and other comprehensive income of ADB Safegate Luxembourg 1 S.à r.l. 13

Consolidated statement of financial position of ADB Safegate Luxembourg 1 S.à r.l. 14

Consolidated statement of changes in equity of ADB Safegate Luxembourg 1 S.à r.l. 15

Consolidated statement of cash flows of ADB Safegate Luxembourg 1 S.à r.l. 16

Notes to the consolidated financial statements of ADB Safegate Luxembourg 1 S.à r.l. 17

1. Reporting entity 17
2. Significant changes in the current reporting period 17
3. Basis of preparation 17
   - a) Statement of compliance 17
   - b) Basis of measurement 17
   - c) Functional and presentation currency 17
   - d) Critical accounting judgements and key sources of estimation uncertainty 17
   - e) New and amended standards adopted by the Group 19
   - f) New standards and interpretations issued but not yet applicable 20
4. Accounting policies and significant judgements 21

4.1 Material accounting policy information 21

- a) Basis of consolidation 21
- b) Foreign currency 22
- c) Financial instruments 22
- d) Property, plant and equipment 23
- e) Intangible assets 24
- f) Inventories 25
- g) Impairment 25
- h) Employee benefits 26
- i) Provisions 27
- j) Revenues from contracts with customers 27
- k) Leases 29
- l) Finance income and expenses 31
- m) Income tax 31

5. Determination of fair values 31
6. Financial risk management 33

Overview 33

- a) Credit risk 33

b) Liquidity risk 33
c) Market risk 33
7. Revenue from contracts with customers 35
a) Disaggregation of revenue from contracts with customers 35
b) Assets and liabilities related to contracts with customers 35
c) Revenue recognised in relation to contract liabilities 36
d) Unsatisfied long-term contracts 36
e) Assets recognized from costs to obtain a contract 36
8. Other expenses 37
a) Other expenses 37
b) Expenses by nature 37
9. Personnel 38
a) Personnel expense 38
b) Employment – average number of employees 38
10. Finance income and expense, recognized in statement of profit or loss 39
11. Tax expense, Deferred Tax Assets and Liabilities 40
12. Property, plant and equipment 43
13. Intangible assets and Goodwill 44
14. Inventories 47
15. Trade and other receivables, Contract Assets 48
16. Cash and cash equivalents 49
17. Capital and reserves 50
18. Loans and borrowings 51
19. Liabilities for post-employment and other long-term employee benefits 55
20. Provisions 59
21. Trade and other payables, Contract liabilities 60
22. Financial instruments 61
23. Leases 68
24. Capital commitments 70
25. Contingencies 70
26. Related parties 70
27. Group entities 71
28. Auditor fees 72
29. Subsequent events 72

ADB SAFEGATE

MANAGEMENT REPORT ON THE CONSOLIDATED FINANCIAL STATEMENTS OF ADB SAFEGATE LUXEMBOURG 1 S.à r.l. AS AT 31 DECEMBER 2023

In accordance with the Luxembourg law, we hereby submit our consolidated management report on the financial year ended 31 December 2023 of ADB Safegate Luxembourg 1 S.à r.l. ("the Company") together with its subsidiaries (the "ADB SAFEGATE Group" or the "Group"). The consolidated financial statements cover the year from 1 January 2023 to 31 December 2023 with a comparative year from 1 January 2022 to 31 December 2022.

ADB Safegate Luxembourg 1 S.à r.l. is a Luxembourg company registered at the address 14-16 avenue Pasteur, L-2310 Luxembourg. The Company was incorporated on 11 August 2017 and is the ultimate parent company of the ADB SAFEGATE Group.

The ADB SAFEGATE Group was formed when on 3 October 2017, ADB Luxembourg 1 S.à r.l. acquired all the shares of the ADB SAFEGATE Luxembourg S.A. Group for a consideration transferred of 674,9 mEUR with acquired cash excluded.

The Group is a global leading airfield technology group providing advanced, integrated and sustainable solutions for visual, and other guidance to the airfield sector.

The Group has adopted new and amended IFRS standards and IFRIC interpretations applicable as from 1 January 2023. They did not have any impact on the amounts recognized in the current period and are not expected to significantly affect future periods. The Group has not early adopted any standard, interpretation or amendment that has been issued but is not yet effective.

1. Overview of the Group financial performance

Revenues for the financial year ended 31 December 2023 amounted to 469,3 mEUR (407,4 mEUR in 2022). Total comprehensive income for the year was -56,1 mEUR (-29,4 mEUR in 2022). Operating result was 13,1 mEUR (-1,2 mEUR in 2022). EBITDA[1] was 79,9 mEUR (63,2 mEUR in 2022).

[1] EBITDA is a non-IFRS performance measure calculated by adding back from the Result from Operating activities the Amortisation, Depreciation, Impairment, and Non-recurring expenses.

ADB SAFEGATE

The financial year was characterized by non-recurring expenses of 8,8 mEUR mainly in connection with abnormal supply chain disruptions for an amount of 2,8 mEUR, global transformation project costs of 2,5 mEUR, group restructuring costs for 1,3 mEUR, recruitment expenses for 0,7 mEUR, and acquisition related costs for an amount of 0,4 mEUR.

As a result of the impairment testing on goodwill performed at 31 December 2023, an impairment loss on goodwill of 5,8 mEUR was recognized (nil in 2022). Impairment losses on Intangible assets were nil in 2023, while in 2022 the Group accounted for an impairment loss amounting to 1,5 mEUR on Intangible assets (technology). 59,9 mEUR net financial expenses were incurred in 2023 (51,1 mEUR in 2022), including a net foreign exchange gain of 4,7 mEUR (compared to a 9,1 mEUR net loss in 2022).

The Group complies with environmental and employment regulations applicable in the countries where the Group conducts its activities. The sites of Graz, Malmö and Zaventem are ISO 14001:2015 certified. The sites of Malmö and Zaventem are also ISO 45001:2018 certified.

2. Key financial year 2023 events

The year was characterized by strong revenue growth and better operating results in most regions. Revenues came in at 469,3 mEUR in 2023 vs 407,4 mEUR in 2022, an increase of 14%. The Group achieved a record order intake of 482.8 m EUR in 2023, surpassing the 448.6 mEUR recorded in 2022. This growth can be attributed to the post-pandemic recovery but increasingly also to an accelerating resurgence of market growth in various regions. In particular in the USA, Asia, and in the Middle East and Africa the Group recorded healthy double digit % growth in order intake. The geopolitical and economic situation in China slowed down order intake for new projects in China, resulting in a decrease in order intake of 29,8% compared to 2022.

From an operational standpoint, the US production plant moved to a new location in Columbus early 2023, without major disruptions on operations, and offering the Group further growth, efficiency, and insourcing opportunities. Furthermore, a new automated production line was installed in the Zaventem plant. Both plants production volumes and operating performance were above budget in 2023 and strongly improved efficiency versus 2022. The Group continues to closely monitor production volume, inventory levels, supply chain management.

The Group continues to take measures to adjust its cost structure to a continuously evolving and uncertain business environment by streamlining

ADB SAFEGATE

its organization, eliminating management positions, and active procurement management.

At the date of authorization of these financial statements, the Group has 32,1 mEUR of directly available liquidity comprising cash and cash equivalents and 14,0 mEUR unused Revolving Credit Facility (RCF) available. The Group is required to comply with a Net Debt to EBITDA covenant once over 35% of the RCF is drawn at the date of the financial statements. This covenant test was applicable at year end and the Group complied with this covenant.

For the year ended 31 December 2023 the Group recognized a 41,0 mEUR Net Loss while the Net Change in cash was -3,7 mEUR (in 2022, the Group recorded a Net Loss of 44,4 mEUR while the Net Change in cash was -11,0 mEUR).

The Group's net assets as of 31 December 2023 were -88,9 mEUR (-32,6 mEUR in 2022) with the decline primarily driven by the Net Loss of 41,0 mEUR.

Management believes 2024 will be another year of strong growth for the Group with revenues expected to grow with a double digit % in 2024. Given long project lead times - in particular for larger often multi-year projects like expansions or major refurbishment projects - the strong order intake in 2023 will help drive revenues growth for 2024.

Management continues to expect that the Group has adequate resources to continue in operation for at least the next 12 months from the date of approval of these consolidated financial statements and thus assesses that the going concern basis of accounting remains appropriate. Management has not identified any material uncertainty that may cast a significant doubt as to the Group's ability to continue as a going concern.

The share capital of the Company is composed of 18 083 600 ordinary shares with a nominal value of 1,00 EUR, 395 616 400 A preferred shares with a nominal value of 1,00 EUR, 12 800 000 B preferred shares with a nominal value of 1,00 EUR, and, during 2022, the issue of 40,000,000 new class C preferred shares with a nominal value of 1.00 EUR. No shares are held by the company itself, by subsidiary undertakings or by a person acting in his own name but on behalf of those undertakings.

3. Important events that have occurred since the end of the financial year

No significant events occurred since the end of the financial year which could negatively affect the financial position of the Group.

ADB SAFEGATE

4. Research & Development (R&D) activities

The Group R&D net spending amounted to 4,9 mEUR in 2023 (8,2 mEUR in 2022), excluding 17,1 mEUR qualifying as development costs and recognized as intangible assets in 2023 (13,5 mEUR in 2022). Spending is dedicated to development of new products and systems with improved functionalities. In addition, design-to-cost activities and product portfolio harmonization continued in 2023, also requiring R&D resources.

R&D activities are primarily carried out in the US and in Western Europe.

5. Existence of branches

The Group has branch offices and / or permanent establishments in Chile, Finland, France, Italy, Malaysia, the Netherlands, Spain, Taiwan, Turkey, Tunisia, the United Arab Emirates (Abu Dhabi) and the United Kingdom as at 31 December 2023.

6. Financial instruments

In January 2023, the Group entered into a USD interest rate cap hedge transaction with termination date of 3 December 2024. Contracts covering interest rate risks are accounted for in accordance with the hedge accounting method.

7. Risks and uncertainties

Risks associated with activities conducted from 1 January 2023 until 31 December 2023 (1 January 2022 until 31 December 2022) have been reflected in the consolidated financial statements through the recording of appropriate provisions. Risks associated with the execution of ongoing sales orders or projects are also reflected in the consolidated financial statements as required.

Some of the Group's main risk factors are associated with its international footprint and the industry in which it operates. Growth in the number or in the size of airports, evolution of airport capital expense budgets and macroeconomic indicators have an influence on the Group's business.

The Group continues to assess climate risk impact on aviation and on airports. As aviation contributes about 2.5% to global CO2 emissions, the impact on climate and climate risks of the sector cannot be ignored. Whereas longer term growth trends may be affected by climate concerns, the aviation sector as a whole and air travel are still expected to continue to grow longer term given the crucial role aviation plays in modern society. In the short and medium term, the Group also sees additional interest in

ADB SAFEGATE

replacing halogen airfields by LED or other latest technology lighting, having a positive impact on business. The Group will be subject to the CSRD (Corporate Social Responsibility Directive) for the reporting period 2025. In preparation for compliance with the CSRD, management is currently undergoing the Double materiality assessment in line with European Sustainability Reporting Standards. Furthermore, the Group is also in the process of obtaining a climate activator certification (Carbon neutral) on its Co2 emissions globally.

Credit risk associated with customers is closely monitored and may have an impact on the Group's results.

The Group's exposure to market risk, credit risk, liquidity risk, and cash flow risk is explained in more detail in note 6 Financial risk management and in note 23 Financial instruments of the Group's Consolidated Financial Statements. Attraction and retention of qualified personnel is also a key success factor for the Group.

8. Other

2024 performance up to 31 March 2024 is satisfactory and above budget 2024. Order Intake, revenues, and EBITDA as of 31 March 2024 are all above budget. Furthermore, in February 2024, the Group has signed a significant contract for New York's JFK airport Terminal 1, confirming our strategy and our investments in innovation in recent years.

The 2024 budget shows sufficient cash generation for the year 2024. The 2024 budget foresees the Group to pass the covenant test at the end of each quarter. The Group expects no change in Expected Credit Loss (ECL) based on data of the first three months of 2024. The Group does not anticipate any material loss of clients.

25 April 2024

Signature of Directors:

Laurent Dubois

Christelle Frank

Deloitte.

Deloitte Audit
Société à responsabilité limitée
20 Boulevard de Kockelscheuer
L-1821 Luxembourg

Tel: +352 451 451
www.deloitte.lu

To the Board of Managers
ADB Safegate Luxembourg 1 S.à r.l.
14-16, Avenue Pasteur
L - 2310 Luxembourg

REPORT OF THE *REVISEUR D'ENTREPRISES AGREE*

Report on the Audit of the Consolidated Financial Statements

Opinion

We have audited the consolidated financial statements of ADB Safegate Luxembourg 1 S.à r.l. and its subsidiaries (the "Group"), which comprise the consolidated statement of financial position as at December 31, 2023, the consolidated statement of profit or loss and other comprehensive income, the consolidated statement of changes in equity, the consolidated statement of cash flows for the year then ended, and notes to the consolidated financial statements, including material accounting policy information and other explanatory information.

In our opinion, the accompanying consolidated financial statements give a true and fair view of the consolidated financial position of the Group as at December 31, 2023, and of its consolidated financial performance and its consolidated cash flows for the year then ended in accordance with IFRS Accounting Standards as adopted by the European Union.

Basis for Opinion

We conducted our audit in accordance with the Law of July 23, 2016 on the audit profession (Law of July 23, 2016) and with International Standards on Auditing (ISAs) as adopted for Luxembourg by the *Commission de Surveillance du Secteur Financier* (CSSF). Our responsibilities under the Law of July 23, 2016 and ISAs as adopted for Luxembourg by the CSSF are further described in the "Responsibilities of the *réviseur d'entreprises agréé* for the Audit of the consolidated financial statements" section of our report. We are also independent of the Group in accordance with the International Code of Ethics for Professional Accountants, including International Independence Standards, issued by the International Ethics Standards Board for Accountants (IESBA Code) as adopted for Luxembourg by the CSSF together with the ethical requirements that are relevant to our audit of the consolidated financial statements, and have fulfilled our other ethical responsibilities under those ethical requirements. We believe that the audit evidence we have obtained is sufficient and appropriate to provide a basis for our opinion.

Société à responsabilité limitée au capital de 360.000 €
RCS Luxembourg B 67.895
Autorisation d'établissement 10022179

© Deloitte Audit, SARL

Deloitte.

Other information

The Board of Managers is responsible for the other information. The other information comprises the information stated in the consolidated annual report including the management report but does not include the consolidated financial statements and our report of the *réviseur d'entreprises agréé* thereon.

Our opinion on the consolidated financial statements does not cover the other information and we do not express any form of assurance conclusion thereon.

In connection with our audit of the consolidated financial statements, our responsibility is to read the other information and, in doing so, consider whether the other information is materially inconsistent with the consolidated financial statements or our knowledge obtained in the audit or otherwise appears to be materially misstated. If, based on the work we have performed, we conclude that there is a material misstatement of this other information, we are required to report this fact. We have nothing to report in this regard.

Responsibilities of the Board of Managers and Those Charged with Governance for the Consolidated Financial Statements

The Board of Managers is responsible for the preparation and fair presentation of these consolidated financial statements in accordance with IFRSs as adopted by the European Union, and for such internal control as the Board of Managers determines is necessary to enable the preparation of consolidated financial statements that are free from material misstatement, whether due to fraud or error.

In preparing the consolidated financial statements, the Board of Managers is responsible for assessing the Group's ability to continue as a going concern, disclosing, as applicable, matters related to going concern and using the going concern basis of accounting unless the Board of Managers either intends to liquidate the Group or to cease operations, or has no realistic alternative but to do so.

Those charged with governance are responsible for overseeing the Group's financial reporting process.

Deloitte.

Responsibilities of the "réviseur d'entreprises agréé" for the Audit of the Consolidated Financial Statements

Our objectives are to obtain reasonable assurance about whether the consolidated financial statements as a whole are free from material misstatement, whether due to fraud or error, and to issue a report of the *réviseur d'entreprises agréé* that includes our opinion. Reasonable assurance is a high level of assurance, but is not a guarantee that an audit conducted in accordance with the Law of July 23, 2016 and with ISAs as adopted for Luxembourg by the CSSF will always detect a material misstatement when it exists. Misstatements can arise from fraud or error and are considered material if, individually or in the aggregate, they could reasonably be expected to influence the economic decisions of users taken on the basis of these consolidated financial statements.

As part of an audit in accordance with the Law of July 23, 2016 and with ISAs as adopted for Luxembourg by the CSSF, we exercise professional judgment and maintain professional skepticism throughout the audit. We also:

- Identify and assess the risks of material misstatement of the consolidated financial statements, whether due to fraud or error, design and perform audit procedures responsive to those risks, and obtain audit evidence that is sufficient and appropriate to provide a basis for our opinion. The risk of not detecting a material misstatement resulting from fraud is higher than for one resulting from error, as fraud may involve collusion, forgery, intentional omissions, misrepresentations, or the override of internal control.
- Obtain an understanding of internal control relevant to the audit in order to design audit procedures that are appropriate in the circumstances, but not for the purpose of expressing an opinion on the effectiveness of the Group's internal control.
- Evaluate the appropriateness of accounting policies used and the reasonableness of accounting estimates and related disclosures made by the Board of Managers.
- Conclude on the appropriateness of Board of Managers use of the going concern basis of accounting and, based on the audit evidence obtained, whether a material uncertainty exists related to events or conditions that may cast significant doubt on the Group's ability to continue as a going concern. If we conclude that a material uncertainty exists, we are required to draw attention in our report of the *réviseur d'entreprises agrée* to the related disclosures in the consolidated financial statements or, if such disclosures are inadequate, to modify our opinion. Our conclusions are based on the audit evidence obtained up to the date of our report of the *réviseur d'entreprises agréé*. However, future events or conditions may cause the Group to cease to continue as a going concern.
- Evaluate the overall presentation, structure and content of the consolidated financial statements, including the disclosures, and whether the consolidated financial statements represent the underlying transactions and events in a manner that achieves fair presentation.
- Obtain sufficient appropriate audit evidence regarding the financial information of the entities and business activities within the Group to express an opinion on the consolidated financial statements. We are responsible for the direction, supervision and performance of the Group audit. We remain solely responsible for our audit opinion.

Deloitte.

We communicate with those charged with governance regarding, among other matters, the planned scope and timing of the audit and significant audit findings, including any significant deficiencies in internal control that we identify during our audit.

Report on Other Legal and Regulatory Requirements

The consolidated management report is consistent with the consolidated financial statements and has been prepared in accordance with applicable legal requirements.

For Deloitte Audit, *Cabinet de révision agréé*

Vincent Blaise

Vincent Blaise, *Réviseur d'entreprises agréé*
Partner

April 26, 2024

Consolidated financial statements of ADB Safegate Luxembourg 1 S.à r.l.

Consolidated statement of profit or loss and other comprehensive income of ADB Safegate Luxembourg 1 S.à r.l.

In millions of Euro	Notes	For the year ending 31/12/2023	For the year ending 31/12/2022
Statement of Profit or Loss			
Revenue	7	469,3	407,4
Cost of Sales		-322,5	-281,1
Gross Profit		**146,8**	**126,3**
Marketing and Selling Expenses		-34,4	-27,7
General Administration Expenses		-36,6	-41,8
Research and Development Expenses		-4,9	-8,2
Impairment Loss on Trade Receivables and Contract Assets	8, 22	0,8	-0,1
Depreciation	12	-8,4	-7,5
Impairment Loss on Goodwill and Intangible Assets	13	-5,8	-1,5
Amortization	13	-41,7	-40,4
Other Expenses	8	-2,7	-0,3
Result From Operating Activities		**13,1**	**-1,2**
Financial Income		12,3	18,1
Financial Costs		-72,2	-69,1
Net Financial Costs	10	**-59,9**	**-51,1**
Share of Net Profit of Joint Ventures (Accounted for using Equity Method)		0,0	0,0
Result Before Taxes		**-46,8**	**-52,3**
Tax Income / (Expense)	11	5,8	7,9
Result after Tax for the period		**-41,0**	**-44,4**
Result For The Period Attributable To:			
Owners Of The Company		-41,0	-44,4
Non-Controlling Interests		0,0	0,0
Other comprehensive income			
Items that will not be reclassified to profit or loss		**-0,5**	**2,1**
Defined benefit plan actuarial gains (losses)	19	-0,5	2,1
Items that may be reclassified subsequently to profit or loss	10	**-14,6**	**13,0**
Foreign currency translation differences – foreign operations		-5,9	2,0
Effective portion of changes in fair value of cash-flow hedges		-8,1	11,5
Tax on other comprehensive income		-0,6	-0,5
Other comprehensive income for the period (net of tax)		**-15,1**	**15,0**
Total comprehensive income for the period		**-56,1**	**-29,4**
Total comprehensive income attributable to:			
Owners of the Company		-56,1	-29,4
Non-controlling interests		0,0	0,0
Total comprehensive income for the period		**-56,1**	**-29,4**

C

The accompanying notes on pages 8 - 63 are an integral part of these consolidated financial statements.

Consolidated statement of financial position of ADB Safegate Luxembourg 1 S.à r.l.

In millions of euro	Notes	31/12/2023	31/12/2022
Assets			
Property, plant and equipment	12	45,6	26,0
Intangible assets	13	280,6	306,5
Goodwill	13	183,6	193,5
Investment in a joint venture		0,1	0,1
Fixed assets		**509,9**	**526,0**
Loan receivables		0,5	0,3
Financial assets	22	2,3	8,9
Deferred tax assets	11	0,2	0,3
Costs incurred to obtain or fulfil a contract	7	1,6	1,8
Other non-current assets		**4,5**	**11,3**
Total non-current assets		**514,4**	**537,3**
Inventories	14	55,7	57,0
Current tax assets	11	2,4	1,5
Current financial assets - interest free	22	0,0	1,5
Trade and other receivables	15	91,6	85,3
Contract assets	7,15	93,5	84,6
Other current assets		13,8	14,9
Cash and cash equivalents	16	30,1	34,2
Total current assets		**287,2**	**279,0**
Total assets		**801,6**	**816,4**
Equity			
Share capital	17	466,5	466,5
Reserves		-7,1	7,7
Retained earnings		-549,7	-508,7
Employee benefit obligations	19	1,4	1,9
Total equity attributable to the owners of the Company		**-88,9**	**-32,6**
Non-controlling interests		0,0	0,0
Total equity		**-88,9**	**-32,6**
Liabilities			
Loans and borrowings	18	603,9	588,8
Other financial liabilities		0,1	0,1
Employee benefit obligations	19	1,6	1,1
Deferred tax liabilities	11	45,2	54,8
Provisions	20	1,9	2,4
Lease liabilities	18, 23	19,4	4,0
Total non-current liabilities		**672,1**	**651,3**
Current tax liabilities	11	3,8	2,0
Loans and borrowings	18	74,7	56,4
Trade and other payables, including derivatives	21	74,6	72,4
Contract liabilities	7, 21	36,6	40,9
Provisions	20	6,6	5,3
Lease Liabilities	18, 23	2,8	2,9
Other current liabilities		19,3	17,7
Total current liabilities		**218,4**	**197,7**
Total liabilities		**890,5**	**849,0**
Total equity and liabilities		**801,6**	**816,4**

The accompanying notes on pages 8 - 63 are an integral part of these consolidated financial statements.

Consolidated statement of changes in equity of ADB Safegate Luxembourg 1 S.à r.l.

In millions of euro	Share Capital	Additional paid in capital	Translation Reserve	Hedging Reserve	Actuarial gain/loss Pension Plans	Retained Earnings	Total equity attributable to owners of the company	Non-controlling interests	Total Equity
01/01/2023	**466,5**	**-**	**-2,7**	**10,4**	**1,9**	**-508,7**	**-32,6**	**0,0**	**-32,6**
Total comprehensive income for the period	**-**	**-**	**-5,9**	**-8,7**	**-0,5**	**-41,0**	**56,1**	**-**	**-56,1**
Profit/(loss)	-	-	-	-	-	-41,0	-41,0	-	-41,0
Total other comprehensive income	-	-	-5,9	-8,7	-0,5	0,0	-15,1	-	-15,1
Other	**-**	**-**	**-0,0**	**-0,1**	**-**	**0,0**	**-0,1**	**0,0**	**-0,1**
Issue of share capital	-	-	-	-	-	0,1	0,1	-	0,1
Other	-	-	-0,0	-0,1	-	-0,1	-0,2	-0,0	-0,2
31/12/2023	**466,5**	**-**	**-8,6**	**1,5**	**1,4**	**-549,7**	**-88,9**	**-**	**-88,9**

In millions of euro	Share Capital	Additional paid in capital	Translation Reserve	Hedging Reserve	Actuarial gain/loss Pension Plans	Retained Earnings	Total equity attributable to owners of the company	Non-controlling interests	Total Equity
01/01/2022	**426,5**	**-**	**-4,1**	**-0,6**	**-0,2**	**-464,1**	**-42,6**	**0,0**	**-42,6**
Total comprehensive income for the period	**-**	**-**	**2,0**	**11,0**	**2,1**	**-44,4**	**-29,4**	**-**	**-29,4**
Profit/(loss)	-	-	-	-	-	-44,4	-44,4	-0,0	-44,4
Total other comprehensive income	-	-	2,0	11,0	2,1	-0,0	15,0	-0,0	15,0
Other	**40,0**	**-**	**-0,5**	**-**	**-**	**-0,1**	**39,3**	**-**	**39,3**
Issue of share capital	40,0	-	-	-	-	-	40,0	-	40,0
Other	-	-	-0,5	-	-	-0,1	-0,7	-	-0,7
31/12/2022	**466,5**	**-**	**-2,7**	**10,4**	**1,9**	**-508,7**	**-32,6**	**0,0**	**-32,6**

The accompanying notes on pages 8 - 63 are an integral part of these consolidated financial statements.

Consolidated statement of cash flows of ADB Safegate Luxembourg 1 S.à r.l.

in millions of euro	Notes	31/12/2023	31/12/2022
Cash flows from operating activities			
Result after Tax for the period		-41,0	-44,4
Adjustments for:			
Depreciation	12	8,4	7,5
Amortisation of intangible assets	13	41,7	40,4
Impairment on goodwill and intangible assets	13	5,8	1,5
Impairment losses on trade receivables, contract assets & inventory	8, 22	-1,4	0,7
Amortisation of costs to fulfill a contract	8	1,4	0,9
(Gain) on disposal of property, plant and equipement	12	0,0	-1,1
Net finance expense	10	59,9	51,1
Income tax expense/(income)	11	-5,8	-7,9
Change in provisions and employee benefits		0,8	-2,9
Change in Working Capital - Inventories		0,7	-17,7
Change in Working Capital - Trade and Other Payables		2,0	7,8
Change in Working Capital - Contract Liabilities		-5,6	3,5
Change in Working Capital - Trade and Other Receivables		-7,3	1,2
Change in Working Capital - Contract Assets		-8,0	-12,8
Change in Working Capital - Other Current Assets		1,0	-5,9
Change in Working Capital - Other Current Liabilities		4,3	0,4
Change in Other Non Current Assets		0,0	1,3
Income tax paid		-2,9	-4,7
Net cash generated by (used in) operating activities		**54,6**	**18,7**
Cash flows from investing activities			
Acquisition of Intangible Assets	13	-17,1	-15,5
Acquisition of property, plant and equipment	12	-12,0	-5,9
Proceeds from sale of property, plant and equipment	12	0,1	5,6
Net cash from (used in) investing activities		**-29,0**	**-15,8**
Cash flows from financing activities			
Proceeds from issue of share capital and stock options	17	0,0	40,0
Payment of transaction costs	18	0,0	-5,9
New borrowings	18	15,4	0,0
Repayment of borrowings	18	0,0	-7,6
Repayment of the principal of lease liabilities	23	-3,2	-3,1
Interest and bank charges paid	18, 23	-41,5	-37,4
Net cash from (used in) financing activities		**-29,3**	**-14,0**
Net Increase / decrease in cash and cash equivalents		**-3,7**	**-11,0**
Cash and cash equivalents beginning balance	**16**	**34,2**	**42,3**
Effect of exchange rate fluctuations on cash held		-0,4	2,9
Cash and cash equivalents ending balance	**16**	**30,1**	**34,2**

The accompanying notes on pages 8 – 63 are an integral part of these consolidated financial statements.

Notes to the consolidated financial statements of ADB Safegate Luxembourg 1 S.à r.l.

1. Reporting entity

ADB Safegate Luxembourg 1 S.à r.l. (the "Company") is a company incorporated on 11 August 2017, with registered office at 14-16 Avenue Pasteur, L-2310 Luxembourg, and registered with the Luxembourg Register of Commerce and Companies under number B 217.137.

The consolidated financial statements of the Company for the year ended 31 December 2023 comprise the Company and its subsidiaries (together referred to as the "Group" and individually as "Group entities"). The comparative year is from 1 January 2022 until 31 December 2022. The Group is a leading provider of intelligent solutions that deliver superior airport performance from approach to departure. The Group's portfolio includes solution and services that harmonize airport performance, tackling every aspect of traffic handling and guidance, from approach, runway and taxiway lighting to tower-based traffic control systems, intelligent gate and docking automation, and weather systems.

2. Significant changes in the current reporting period

No significant event occurred during the current reporting period.

3. Basis of preparation

a) Statement of compliance

The consolidated financial statements of the Group have been prepared in accordance with International Financial Reporting Standards (IFRS) as adopted by the European Union.

The consolidated financial statements were authorised for issue by the Board of Directors on 25 April 2024.

b) Basis of measurement

The consolidated financial statements have been prepared on a historical cost basis except for (i) derivative financial instruments which are measured at fair value, (ii) net defined benefit liabilities which are measured at fair value of plan assets less the present value of the defined benefit obligation, and (iii) acquired assets and liabilities assumed in a business combination.

c) Functional and presentation currency

These consolidated financial statements are presented in million Euro, which is the Company's functional currency. All financial information presented in million Euro has been rounded to the nearest 0,1 million. Consequently, rounding differences can arise.

d) Critical accounting judgements and key sources of estimation uncertainty

In applying the Group's accounting policies, which are described in note 4, management is required to make judgements (other than those involving estimations) that have a significant impact on the amounts recognized, and to make estimates and assumptions about the carrying amounts of assets and liabilities that are not readily apparent from other sources. The estimates and associated assumptions are based on historical experience and other factors that are considered to be relevant. Actual results may differ from these estimates.

The estimates and underlying assumptions are reviewed on an ongoing basis. Revisions to accounting estimates are recognized in the period in which the estimate is revised if the revision affects only that period, or in the period of the revision and future periods if the revision affects both current and future periods.

Critical judgements
The Group has not made critical judgements in the process of applying the Group's accounting policies that would have significant effect on the amounts recognised in financial statements.

Key sources of estimation uncertainty
The key assumptions, and other key sources of estimation uncertainty at the reporting period that may have a significant risk of causing a material adjustment to the carrying amounts of assets and liabilities within the next financial year, are described below.

- Impairment of trade receivables and contract assets: see accounting policy (g)

For contract assets and trade receivables, the Group has applied the standard's simplified approach and has calculated ECLs based on lifetime expected credit losses. The Group has established a provision matrix that is based on the Group's historical credit loss experience, adjusted for forward-looking factors specific to the debtors and the economic environment.

- Impairment of non-financial assets: see accounting policy (g) (ii)

The impairment test performed considers the Group's budget for the following year and long-range business plan cash flows for each cash-generating units, discounted to present value at the weighted average cost of capital (WACC) for the year ended on December 31, 2023. In preparing or using this information, the Company uses certain estimates, as follows:

a) Gross expected cash flow - management projects inflows and outflows based on past performance considering its business strategy and market development expectations.
b) Growth rates - the growth rates are reflected in the revenue flow and the gross margin budgeted by the Group, consistent with the forecasts included in industry reports.
c) Discount rates - an appropriate discount rate is used that reflects the expectation of both debt and equity investors at the time the calculation is made weighted by their respective contribution of capital.

- Revenue (percentage of completion): see accounting policy (j)

A significant portion of revenue is derived from long-term contracts, recognized over time by using the stage of completion or percentage of completion ("POC") determined using the cost-to-cost method, see further details in the accounting policy (j).

During the contract execution, the Group assesses the costs incurred, adjusting total estimated costs at completion, if necessary, to reflect variations in costs in relation to the projections, mainly due to changes in circumstances and new events, such as contract modification. Any resulting increase or decrease in estimated revenues or costs at completion is recognized as catch-up adjustment in the consolidated statements of profit or loss, increasing or decreasing revenue and gross margin, in the reporting period which the circumstances that give rise to the change become known by management.

- Useful life intangible assets: see accounting policy (e)

Amortisation of intangible assets requires estimates of useful lives, which are determined through the exercise of judgment, taking into consideration factors such as economic and market conditions and the useful lives of the assets.

- Fair value of derivatives: see note 5 (iv)

Fair value is determined by reference to the market price at the end of the period. The interest rate swaps which the Group currently uses to hedge its interest rate risk is estimated based on the present value of future principal and interest cash flows, discounted at the market rate of the interest at the reporting date.

- Liabilities for post-employment and other long-term employee benefits: see accounting policy (h)

The liability in respect of post-employment defined benefit plans is determined using actuarial valuations. The actuarial valuation involves making assumptions about, among others, discount rates, expected rates of return on assets, future salary increases and mortality rates. Due to the long-term nature of these plans, such estimates are subject to uncertainty.

- Acquisition of subsidiary: fair value of the consideration transferred, and fair value of the assets acquired, and liabilities assumed: see note 5.i

Management performs a valuation analysis to allocate the purchase price based on the acquisition date fair values of the identifiable assets acquired and liabilities assumed. Determining the fair value of identifiable assets acquired and liabilities assumed on the acquisition date and contingent share consideration requires the use of judgment and estimates. Valuations are highly dependent on the inputs used and assumptions made by management regarding the future performance of these assets and any changes in the discount rate applied.

- Leases – estimation of the incremental borrowing rate: see accounting policy (k)

The measurement of lease obligations is subject to management's judgments of the applicable incremental borrowing rate and the expected lease term. The carrying balance of the right-of-use assets, lease obligations, and the resulting interest and depletion and depreciation expense, may differ due to changes in the market conditions and expected lease terms. Applicable incremental borrowing rates are based on judgments of the economic environment, term, currency, and the underlying risk inherent to the asset.

- Lease term of contracts with renewal and termination options, as a lessee: see accounting policy (k)

The Group leases certain properties which contain extension options exercisable by the Group after the end of the non-cancellable contract period. The extension options held are exercisable only by the Group and not by the lessors. The Group assesses at lease commencement date whether it is reasonably certain to exercise the extension options. The Group reassesses whether it is reasonably certain to exercise the options if there is a significant event or significant changes in circumstances within its control.

- Recognition of deferred tax assets for carried forward tax losses: see accounting policy (m)

Deferred tax assets relate primarily to tax loss carried forwards and to deductible temporary differences between reported amounts and the tax bases of assets and liabilities. The assets relating to the tax loss carried forwards are recognised if it is probable that the Group will generate future taxable profits against which these tax losses can be set off. The Group analyses past events, and the positive and negative elements of certain economic factors that may affect its business in the foreseeable future to determine the probability of its future utilization of these tax losses carried forward.

e) New and amended standards adopted by the Group

The Group has applied the following standards and amendments for the first time for their annual reporting period commencing 1 January 2023:

- Definition of Accounting Estimates – Amendments to IAS 8 (effective 1 January 2023)
- Disclosure of Accounting policies – Amendments to IAS 1 and IFRS Practice Statement 2 (effective 1 January 2023)
- Deferred tax related to Assets and Liabilities arising from a Single Transaction – Amendments to IAS 12 (effective 1 January 2023)
- International Tax Reform – Pillar Two Model Rules – Amendments to IAS 12 (effective 1 January 2023)
- IFRS 17 Insurance Contracts (effective 1 January 2023)

The amendments and interpretation listed above did not have any impact on the amounts recognised in the current period and are not expected to significantly affect future periods. The Group has not early adopted any other standard, interpretation or amendment that has been issued but is not yet effective.

f) New standards and interpretations issued but not yet applicable

Several new standards, amendments to standards and interpretations are not yet effective for the year ended 31 December 2023, and have not been applied in preparing these consolidated financial statements:

- Classification of Liabilities as Current or Non-current – and – Non-current Liabilities with Covenants - Amendments to IAS 1 (effective 1 January 2024)
- Lease Liability in a Sale and Leaseback – Amendments to IFRS 16 (effective 1 January 2024)
- Disclosures: Supplier Finance Arrangements – Amendments to IAS 7 and IFRS 7 (effective 1 January 2024)
- Lack of exchangeability – Amendments to IAS 21 (effective 1 January 2025)
- Sale or Contribution of Assets between an Investor and its Associate or Joint Venture – Amendments to IFRS 10 and IAS 28
- IFRS 18 Presentation and Disclosures in Financial Statements (effective 1 January 2027)

The Group is assessing the potential impact on the consolidated financial statements resulting from these amendments. These new standards are not expected to significantly affect future periods. There are no other standards that are not yet effective and that would be expected to have a material impact on the entity in the current or future reporting periods and on foreseeable future transactions.

4. Accounting policies and significant judgements

The accounting policies set out below have been applied consistently by the Company and the Group entities and to all the years presented, unless otherwise stated.

4.1 Material accounting policy information

a) Basis of consolidation

(i) Business Combinations

Business combinations are accounted for using the acquisition method as at the acquisition date, which is the date on which control is transferred to the Group. The Group controls an entity when it is exposed to, or has rights to, variable returns from its involvement with the entity and has the ability to affect those returns through its power over the entity.

The consideration transferred for the acquisition of a subsidiary comprises:

- the fair values of the assets transferred
- the liabilities incurred to the former owners of the acquired business
- the equity interests issued by the Group
- the fair value of any asset or liability resulting from a contingent consideration arrangement, and
- the fair value of any pre-existing equity interest in the subsidiary.

The Group recognises any non-controlling interest in the acquired entity on an acquisition-by-acquisition basis either at fair value or at the non-controlling interest's proportionate share of the acquired entity's net identifiable assets.

The excess of:

- the consideration transferred,
- the amount of any non-controlling interest in the acquired entity, and
- the acquisition-date fair value of any previous equity interest in the acquired entity

over the fair value of the net identifiable assets acquired is recorded as goodwill. If those amounts are less than the fair value of the net identifiable assets of the business acquired, the difference is recognised directly in profit or loss as a bargain purchase.

The consideration transferred does not include amounts related to the settlement of pre-existing relationships. Such amounts generally are recognised in profit or loss. Transactions costs, other than those associated with the issue of debt or equity securities, that the Group incurs in connection with a business combination are expensed as incurred. Any contingent consideration payable is measured at fair value at the acquisition date. If the contingent consideration is classified as equity, then it is not remeasured, and settlement is accounted for within equity. Otherwise, subsequent changes in the fair value of the contingent consideration are recognised in profit or loss.

(ii) Subsidiaries

Subsidiaries are entities controlled by the Group. The Group controls an entity when it is exposed to, or has rights to, variable returns from its involvement with the entity and has the ability to affect those returns through its power to direct activities of the Group. The financial statements of subsidiaries are included in the consolidated financial statements from the date that control commences until the date that control ceases. The accounting policies of subsidiaries have been changed when necessary to align them with the policies adopted by the Group.

(iii) Transactions eliminated on consolidation

Intra-Group balances and transactions, and any unrealised income and expenses arising from intra-Group transactions, are eliminated in preparing the consolidated financial statements. Unrealised losses are eliminated in the same way as unrealised gains, but only to the extent that there is no evidence of impairment.

b) Foreign currency

(i) Foreign currency transactions

Transactions in foreign currencies are translated to the respective functional currencies of Group entities at exchange rates at the dates of the transactions. Monetary assets and liabilities denominated in foreign currencies at the reporting date are translated to the functional currency at the exchange rate at that date. The foreign currency gain or loss on monetary items is the difference between amortised cost in the functional currency at the beginning of the period, adjusted for effective interest and payments during the period, and the amortised cost in foreign currency translated at the exchange rate at the end of the period. Non-monetary assets and liabilities denominated in foreign currencies that are measured at fair value are retranslated to the functional currency at the exchange rate at the date that the fair value was determined. Foreign currency differences arising on translation are recognised in profit or loss, except for the effective portion of designated cash flow hedges, which are recognized in other comprehensive income.

(ii) Foreign operations

The assets and liabilities of foreign operations, including goodwill and fair value adjustments arising on acquisition, are translated to euro at exchange rates at the reporting date. The income and expenses of foreign operations are translated to euro at exchange rates at the dates of the transactions.

Foreign currency differences are recognised directly in equity. When a foreign operation is disposed of, in part or in full, the relevant amount in the foreign currency translation reserve is transferred to profit or loss.

c) Financial instruments

(i) Non-derivative financial instruments

Non-derivative financial instruments comprise trade and other receivables, cash and cash equivalents, loans and borrowings, and trade and other payables. These financial instruments are recognised initially at fair value plus any directly attributable transaction costs. Subsequent to initial recognition non-derivative financial instruments are measured at amortised cost using the effective interest rate method, less impairment losses, if applicable.

(ii) Derivative financial instruments

The Group holds derivative financial instruments to hedge its interest rate risk exposures. Embedded derivatives are separated from the host contract and accounted for separately if the economic characteristics and risks of the host contract and the embedded derivative are not closely related. A separate instrument with the same terms as the embedded derivative would meet the definition of a derivative, and the combined instrument is not measured at fair value through profit or loss.

Derivatives are recognised initially at fair value; attributable transaction costs are recognised in profit or loss when incurred.

The Group applies hedge accounting for some designated interest rate cap contracts. The objective of these hedges is to cover the interest risk on the main sources of debt financing. Subsequent to initial recognition, these derivatives are measured at fair value, and changes therein are accounted for through Other Comprehensive Income until the underlying hedged transaction is recognized through profit and loss. This is the case when a forecast transaction subsequently results in the recognition of a non-financial asset or liability or becomes a firm commitment for which fair value hedge accounting is applied.

Derecognition of financial assets
A financial asset (or, where applicable, a part of a financial asset or part of a group of similar financial assets) is primarily derecognised (i.e., removed from the Group's consolidated statement of financial position) when:

- The rights to receive cash flows from the asset have expired
  Or
- The Group has transferred its rights to receive cash flows from the asset or has assumed an obligation to pay the received cash flows in full without material delay to a third party under a 'pass-through' arrangement; and either (a) the Group has transferred substantially all the risks and rewards of the asset, or (b) the Group has neither transferred nor retained substantially all the risks and rewards of the asset, but has transferred control of the asset

When the Group has transferred its rights to receive cash flows from an asset or has entered into a pass-through arrangement, it evaluates if, and to what extent, it has retained the risks and rewards of ownership. When it has neither transferred nor retained substantially all of the risks and rewards of the asset, nor transferred control of the asset, the Group continues to recognise the transferred asset to the extent of its continuing involvement. In that case, the Group also recognises an associated liability. The transferred asset and the associated liability are measured on a basis that reflects the rights and obligations that the Group has retained.

(iii) Share capital

Ordinary shares
Ordinary shares and Preferred shares are classified as equity. Incremental costs directly attributable to the issue of ordinary shares and share options are recognised as a deduction from equity, net of any tax effects.

Preference shares
The Group's A preferred shares, B preferred shares and C preferred shares are classified as equity instruments. See note 17 for further information on economic rights attached to the shares.

Repurchase of share capital
When share capital recognized as equity is repurchased, the amount of the consideration paid, including directly attributable costs, net of any tax effects, is recognized as a deduction from equity. Repurchased shares are classified as treasury shares and presented in the reserve for own shares. When treasury shares are sold or reissued subsequently, the amount received is recognized as an increase in equity, and the resulting surplus or deficit on the transaction is presented in retained earnings.

d) Property, plant and equipment

(i) Recognition and measurement

Items of property, plant and equipment are measured at historical cost less accumulated depreciation and accumulated impairment losses. Historical cost includes expenditure that is directly attributable to the acquisition of the asset.

When parts of an item of property, plant and equipment have different useful lives, they are accounted for as separate items (major components) of property, plant and equipment.

Gains and losses on disposal of an item of property, plant and equipment are determined by comparing the net proceeds from disposal with the carrying amount of property, plant and equipment, and are recognised net within "other income" or "other expenses" in profit or loss.

(ii) Subsequent costs

The cost of replacing part of an item of property, plant and equipment is recognised in the carrying amount of the item if it is probable that the future economic benefits embodied within the part will flow to the Group and its cost can be measured reliably. The carrying amount of the replaced part is derecognised. The costs of the day-to-day servicing of property, plant and equipment are recognised in profit or loss as incurred.

(iii) Depreciation

Depreciation is recognised in profit or loss on a straight-line basis over the estimated useful lives of each part of an item of property, plant and equipment. Leased assets are depreciated over the shorter of the lease term and their useful lives unless it is reasonably certain that the Group will obtain ownership by the end of the lease term. Land is not depreciated.

The estimated useful lives are as follows:

- Buildings	10-40 years
- Plant and equipment	5-10 years
- Furniture and others	3-5 years

Depreciation methods, useful lives and residual values are reviewed at each reporting date.

e) Intangible assets

(i) Goodwill

Goodwill arises on the acquisition of subsidiaries. Goodwill represents the excess of the cost of the acquisition over the Group's interest in the net fair value of the identifiable assets, liabilities and contingent liabilities of the acquiree. When the excess is negative, it is recognised immediately in profit or loss. Goodwill is not amortised, but it is tested for impairment annually, or more frequently if events or changes in circumstances indicate that it might be impaired and is carried at cost less accumulated impairment losses.

Goodwill is allocated to cash-generating units for the purpose of impairment testing. The allocation is made to those cash-generating units or Groups of cash-generating units that are expected to benefit from the business combination in which the goodwill arose. The units or Groups of units are identified at the lowest level at which goodwill is monitored for internal management purposes, being the operating segments. See note 4.1.(g) for further explanation on goodwill impairment testing.

(ii) Technology – Development expenses

Research costs are expensed as incurred. Development expenditures on individual project are recognised as an intangible asset when the Group can demonstrate:

- The technical feasibility of completing the intangible asset so that the asset will be available for use or sale
- Its intention to complete and its ability and intention to use or sell the asset
- How the asset will generate future economic benefits
- The availability of resources to complete the asset
- The ability to measure reliably the expenditure during development

Otherwise, the development expenditures are expensed as incurred.

(iii) Other intangible assets

Other intangible assets that are acquired separately by the Group, which have finite useful lives, are measured at cost less accumulated amortisation and accumulated impairment losses.

(iv) Subsequent expenditure

Subsequent expenditure is capitalised only when it increases the future economic benefits embodied in the specific asset to which it relates. All other expenditure, including expenditure on internally generated goodwill and brands, is recognised in profit or loss as incurred.

(v) Amortisation

Amortisation is recognised in profit or loss on a straight-line basis over the estimated useful lives of intangible assets, other than goodwill, from the date that they are available for use. The estimated useful lives are as follows:

- Patents and trademarks	3-14 years
- Software licences	3-7 years

- Customer relationships	8-14 years
- Backlog	Specific
- Technology	7-11 years

f) Inventories

Inventories are measured at the lower of cost and net realisable value. The cost of inventories is based on the weighted average principle, and includes expenditure incurred in acquiring the inventories, production or conversion costs and other costs incurred in bringing them to their existing location and condition. In the case of manufactured inventories and work in progress, cost includes an appropriate share of production overheads based on normal operating capacity. Write-down for obsolescence is deducted from the cost of inventories.
Net realisable value is the estimated selling price in the ordinary course of business, less the estimated costs of completion and selling expenses.

g) Impairment

(i) Financial assets

The Group has two types of financial assets that are subject to the expected credit loss model:

- Trade receivables
- Contract assets

While cash and cash equivalents are also subject to impairment requirements, the identified impairment loss was immaterial.

Trade receivables and contract assets

The Group applies a simplified approach to measuring expected credit losses, which uses a lifetime expected loss allowance for all trade receivables and contract assets at each reporting date.

To measure the expected credit losses, trade receivables and contract assets have been grouped based on shared credit risk characteristics and the days past due. The contract assets relate to costs in excess and have substantially the same risk characteristics as the trade receivables for the same types of contracts. The Group has therefore concluded that the expected loss rates for trade receivables are a reasonable approximation of the loss rates for the contract assets.

The expected loss rates are based on the payment profiles of sales over a period of 4 years before 31 December 2023 or 31 December 2022 respectively and the corresponding historical credit losses experienced within this period. When necessary, the historical loss rates are adjusted to reflect current and forward-looking information on macroeconomic factors affecting the ability of the customers to settle the receivables. At every reporting date, the historical observed default rates are updated and changes in the forward-looking estimates are analysed.

When determining whether the credit risk of a financial asset has increased significantly since initial recognition and when estimating Expected Credit Losses, the Group considers reasonable and supportable information that is relevant and available without undue cost or effort. This includes both quantitative and qualitative information and analysis, based on the Group's historical experience and informed credit assessment and including forward-looking information when necessary.

The Group assumes that the credit risk on a financial asset has increased significantly if it is more than 30 days past due.

The Group considers a financial asset to be in default when there is no reasonable expectation of recovery. Indicators that there is no reasonable expectation of recovery include, amongst others, the failure of a debtor to engage in a repayment plan with the Group, and a failure to make contractual payments.

The assessment of the correlation between historical observed default rates, forecast economic conditions and expected credit loss is a significant estimate. Impairment losses on trade receivables and contract assets are presented as "Impairment losses on trade receivables and contract assets" within operating profit. Subsequent recoveries of amounts previously written off are credited against the same line item.

(ii) Non-financial assets

The carrying amounts of the Group's non-financial assets, other than inventories and deferred tax assets, are reviewed at each reporting date to determine whether there is any indication of impairment. If any such indication exists, then the asset's recoverable amount is estimated. For goodwill and intangible assets that have indefinite lives or that are not yet available for use, the recoverable amount is estimated each year at the same time.

The recoverable amount of an asset or cash generating unit is the greater of its value in use and its fair value less costs to sell. In assessing value in use, the estimated future cash flows are discounted to their present value using a pre-tax discount rate that reflects current market assessments of the time value of money and the risks specific to the asset or cash generating unit.

For the purpose of impairment testing, assets are grouped together into the smallest group of assets that generates cash inflows from continuing use that are largely independent of the cash inflows of other assets or Groups of assets (the "cash-generating unit"). The goodwill acquired in a business combination, for the purpose of impairment testing, is allocated to cash-generating units that are expected to benefit from the synergies of the combination.

An impairment loss is recognised if the carrying amount of an asset or its cash-generating unit exceeds its estimated recoverable amount. Impairment losses are recognised in profit or loss. Impairment losses recognised in respect of cash-generating units are allocated first to reduce the carrying amount of any goodwill allocated to the units and then to reduce the carrying amounts of the other assets in the unit (group of units) on a *pro rata* basis.

An impairment loss in respect of goodwill is not reversed. In respect of other assets, impairment losses recognised in prior periods are assessed at each reporting date for any indications that the loss has decreased or no longer exists. An impairment loss is reversed if there has been a change in the estimates used to determine the recoverable amount. An impairment loss is reversed only to the extent that the asset's carrying amount does not exceed the carrying amount that would have been determined, net of depreciation or amortisation, if no impairment loss had been recognised.

h) Employee benefits

(i) Defined contribution plans

A defined contribution plan is a post-employment benefit plan under which an entity pays fixed contributions into a separate entity and has no legal or constructive obligation to pay further amounts. Obligations for contributions to defined contribution plans are recognised as an employee benefit expense in profit or loss in the periods during which related services are rendered by employees.

(ii) Defined benefit plans

The Group's net obligation in respect of defined benefit plans is calculated separately for each plan by estimating the amount of future benefit that employees have earned in the current and prior periods, discounting that amount and deducting the fair value of any plan assets.

The calculation of defined benefit obligations is performed annually by a qualified actuary using the projected unit credit method. When the calculation results in a potential asset for the Group, the recognised asset is limited to the present value of economic benefits available in the form of any future refunds from the plan or reductions in future contributions to the plan. To calculate the present value of economic benefits, consideration is given to any applicable minimum funding requirements.

Remeasurements of the net defined benefit liability, which comprise actuarial gains and losses, the return of plan assets (excluding interest) and the effect of the asset ceiling (if any, excluding interest), are recognised immediately in other comprehensive income. The Group determines the net interest expense (income) on the net defined benefit liability (asset) for the period by applying the discount rate used to measure the defined benefit obligation at the beginning of the annual period to the then-net defined benefit liability (asset), taking into account any changes in the net defined benefit liability (asset) during the period as a result of contributions and benefit payments. Net interest expense and other expenses related to defined benefit plans are recognised in profit and loss.

When the benefits of a plan are changed or when a plan is curtailed, the resulting change in benefit that relates to past service or the gain or loss on curtailment is recognised immediately in profit or loss. The Group recognises gains and losses on the settlement of a defined plan when the settlement occurs.

i) Provisions

A provision is recognised if, as a result of a past event, the Group has a present legal or constructive obligation that can be estimated reliably, and it is probable that an outflow of economic benefits will be required to settle the obligation. Provisions are determined by discounting the expected future cash flows at a pre-tax rate that reflects current market assessments of the time value of money and the risks specific to the liability.

(i) Warranties

A provision for warranties is recognised when the underlying products or services are sold. The provision is based on historical warranty data and a weighting of all possible outcomes against their associated probabilities.

(ii) Restructuring

A provision for restructuring is recognised when the Group has approved a detailed and formal restructuring plan, and the restructuring either has commenced or has been announced publicly. Future operating costs are not provided for.

(iii) Onerous contracts

A provision for onerous contracts is recognised when the expected benefits to be derived by the Group from a contract are lower than the unavoidable cost of meeting its obligations under the contract. The provision is measured at the present value of the lower of the expected cost of terminating the contract and the expected net cost of continuing with the contract. Before a provision is established, the Group recognises any impairment loss on the assets associated with that contract.

j) Revenues from contracts with customers

(i) Goods sold

Revenue from the sale of goods is measured at the fair value of the consideration received or receivable, net of returns, trade discounts and volume rebates. Revenue is recognised at a point in time when control of the goods is transferred to the customer. The following indicators are considered when determining when the transfer of controls occurs:

- The entity has a present right to payment.
- The customer has legal title.
- The customer has physical possession.
- The customer has the significant risks and rewards of ownership.
- The customer has accepted the asset.

Analysis based on Incoterms usually indicate when a customer has obtained control of the goods. Invoices are generated when the goods are shipped and are usually payables within 60 days from invoice date.

(ii) Services

The Group provides services such as Maintenance or Training Services (other than those connected to projects). Revenue from services rendered is mostly recognised overtime. The stage of completion is determined by using the Output method based on time elapsed, as the costs incurred are usually linear during the contract. Therefore, the revenue is recognised on a straight-line basis. Invoices are issued according to the contractual terms and are usually payable within 30 to 60 days from invoice date. Unbilled amounts are presented as contract assets.

(iii) Projects

The Group provides integrated solutions to raise efficiency, improve safety, boost environmental sustainability and reduce operational costs. Projects may consist of multiple performance obligations, such as the delivery of goods, their installation and the final commissioning and testing of the resulting operative system, as it is the case of an airfield lighting, a docking and guidance system or a tower project. There are three categories of projects: (1) delivery of multiple not customized goods, i.e., a series of separate distinct performance obligation; (2) delivery of customized goods and installation / integration services, i.e. multiple performance obligation; (3) turn-key projects with significant integration services, i.e. one single distinct obligation. The other distinct obligation is the training of the operators on the customer side, which is not material in terms of value in comparison with the price of a project.

Project revenue includes the initial amount agreed in the contract plus any variations in contract work, claims and incentive payments to the extent that it is highly probable that they will result in revenue and can be measured reliably. Contract revenue and expenses related to project of category (1) are recognized in profit or loss at a point in time for each separate performance obligation. As soon as the outcome of a project of category (2) or (3) can be estimated reliably, contract revenue and expenses are recognized in profit or loss in proportion to the stage of completion of the project.

The stage of completion or percentage of completion ("POC") is determined using the cost-to-cost method. The cost-to-cost method uses the ratio of progress-relevant costs incurred as of the closing date vs. the currently estimated total costs. Progress-relevant project costs are those costs which are directly attributable to a project during the term of its completion. These costs are considered in the determination of the percentage of completion and are recognized as POC costs for the period. The POC method ensures that income from projects is recognized continuously over the term of the project. When the outcome of a project cannot be estimated reliably, contract revenue is recognized only to the extent of contract costs incurred that are likely to be recoverable. An expected loss on a contract is recognized immediately in profit or loss.

Invoices are issued according to the contractual terms based on achieving milestones specified in the contract and are usually payable within 30 to 60 days from invoice date. Unbilled amounts are presented as contract assets, and advance payments received are included in contract liabilities.

(iv) Financing components

The Group does not expect to have any contracts where the period between the transfer of the promised goods or services to the customer and payment by the customer exceeds one year. Consequently, the Group does not adjust any of the transaction prices for the time value of money.

(v) Costs to obtain a contract

The Group pays sales commission to its employees or to some dealers for contract that they obtain. The Group applies the optional practical expedient to immediately expense costs to obtain a contract if the amortisation period of the asset that would have been recognised is one year or less. As such, sales commissions are immediately recognised as an expense and included as part of employee benefits.

The Group pays commission to agents for project obtained. These costs are incremental costs of obtaining the contract and are therefore recognised as an asset and amortised on a systematic basis over the duration of the project.

Amortization and impairment
Costs to fulfil a contract are amortized over the related customer contract period. The amortization period is revised in case of significant changes in the expected timing of transfer to the customer of the goods or services to which the asset relates. Such a change is accounted for as a change in accounting estimates.

An impairment loss is recorded to the extent that the carrying amount of an asset recognized exceeds:
- the remaining amount of consideration that the entity expects to receive in exchange for the goods or services to which the asset relates; less
- the costs that relate directly to providing those goods or services and that have not been recognised as expenses.

(vi) Contract assets and contract liabilities
- Cost in excess: Contract asset includes unbilled amounts, when cumulative trading (revenue recognized in the income statement) of the contract is exceeding cumulative billing (amount for which the Group has enforceable right over the customer).
- Advance payments received: Advance payments represent cash received from the customer before the related work is performed while progress billings are payment requests issued after the commencement of the work. Advance payments received are reported as liabilities.
- Billings in Excess: Contract liability includes Billings in Excess, when cumulative billing of the contract (amount for which the Group has enforceable right over the customer) is exceeding cumulative trading (revenue recognized in the income statement).

The Group present contract assets and contract liabilities in current assets and current liabilities when they are expected to be realized or settled in the normal operating cycle of the Group, even when they are not expected to be realized or they are not due to be settled within twelve months after the reporting period.

k) Leases
At inception of a contract, the Group assesses whether a contract is, or contains, a lease. A contract is, or contains, a lease if the contract conveys the right to control the use of an identified asset for a period of time in exchange for consideration. To assess whether a contract conveys the right to control the use of an identified asset, the Group uses the definition of a lease in IFRS 16.

i. As a lessee

At commencement or on modification of a contract that contains a lease component, the Group allocates the consideration in the contract to each lease component on the basis of its relative stand-alone price. However, for the leases of vehicles, the Group has elected not to separate non-lease components and account for the lease and non-lease components as a single lease component.

The Group leases various building, offices, vehicles, and IT equipment. Rental contracts are typically made for fixed periods of 6 months to 15 years but may have extension options as described below.
Lease terms are negotiated on an individual basis and contain a wide range of different terms and conditions.

Assets and liabilities arising from a lease are initially measured on a present value basis. Lease liabilities include the net present value of the following lease payments:
- fixed payments (including in-substance fixed payments) less any lease incentives receivable
- variable lease payments that are based on an index or a rate initially measured using the index or rate as at the commencement date
- amounts expected to be payable by the Group under residual value guarantees,
- exercise price of a purchase option if the Group is reasonably certain to exercise that option; and
- payments of penalties for terminating the lease, if the lease term reflects the Group exercising an option to terminate the lease

Lease payments to be made under reasonably certain extension options are also included in the measurement of the liability (see below).

The lease payments are discounted using the interest rate implicit in the lease. If that rate cannot be readily determined, which is generally the case for leases in the Group, the lessee's incremental borrowing rate is used, being the rate that the individual lessee would have to pay to borrow the funds necessary to obtain an asset of similar value to the right-of-use asset in a similar economic environment with similar terms, security, and conditions.

To determine the incremental borrowing rate, the Group:

- where possible, uses recent third-party financing received by the individual lessee as a starting point, adjusted to reflect changes in financing conditions since third party financing was received
- uses a build-up approach that starts with a risk-free interest rate adjusted for credit risk for leases held by the Group, which does not have recent third-party financing. and
- makes adjustments specific to the lease, e.g., term, country, currency and security.

The Group is exposed to potential future increases in variable lease payments based on an index or rate, which are not included in the lease liability until they take effect. When adjustments to lease payments based on an index or rate take effect, the lease liability is reassessed and adjusted against the right-of-use asset.
Lease payments are allocated between principal (presented as cash flows resulting from financing activities, on a separate line) and finance cost (presented as cash flows resulting from financing activities, in accordance with the Group's accounting policy regarding the presentation of interest payments). The finance cost is charged to profit or loss over the lease period so as to produce a constant periodic rate of interest on the remaining balance of the liability for each period.

Right-of-use assets are measured at cost comprising the following:

- the amount of the initial measurement of lease liability
- any lease payments made at or before the commencement date less any lease incentives received
- any initial direct costs, and
- restoration costs.

Right-of-use assets are generally depreciated over the shorter of the asset's useful life and the lease term on a straight-line basis. If the Group is reasonably certain to exercise a purchase option, the right-of-use asset is depreciated over the underlying asset's useful life. Right-of-use assets are parts of CGU and are therefore not tested for impairment individually.

Payments associated with short-term leases of equipment and vehicles and all leases of low-value assets are recognized on a straight-line basis as an expense in profit or loss. Short-term leases are leases with a lease term of 12 months or less.

Extension and termination options are included in several offices and vehicles leases across the Group. These are used to maximize operational flexibility in terms of managing the assets used in the Group's operations. Most of the extension and termination options held are exercisable only by the Group and not by the respective lessor.

Renewal options in offices leases have been included in the lease liability when management considers reasonably certain the renewal of these leases.
All options regarding vehicles and IT leases are excluded from the lease liability.

The lease term is reassessed if an option is actually exercised (or not exercised) or the Group becomes obliged to exercise (or not exercise) it. The assessment of reasonable certainty is only revised if a significant event or a significant change in circumstances occurs, which affects this assessment, and that is within the control of the lessee.

ii. As a lessor

In 2023, the Group act as a lessor for a non-significant lease.

l) Finance income and expenses

Finance income comprises interest income on funds invested, gains on the disposal of available-for-sale financial assets and gains on hedging instruments that are recognised in profit or loss. Interest income is recognised as it accrues in profit or loss, using the effective interest method.

Finance expenses comprise interest expense on borrowings, unwinding of the discount on provisions, impairment losses recognised on financial assets, and losses on hedging instruments that are recognised in profit or loss.

Foreign currency gains and losses are reported on a net basis.

m) Income tax

Income tax expense comprises current and deferred tax. Income tax expense is recognised in profit or loss except to the extent that it relates to items recognised directly in equity, in which case it is recognised in equity.

Current tax is the expected tax payable on the taxable income for the year, using tax rates enacted or substantively enacted at the reporting date, and any adjustment to tax payable in respect of previous years.

Deferred tax is recognised using the balance sheet method, providing for temporary differences between the carrying amounts of assets and liabilities for financial reporting purposes and the amounts used for taxation purposes.

Deferred tax is not recognised for the following temporary differences: the initial recognition of assets or liabilities in a transaction that is not a business combination and that affects neither accounting nor taxable profit or loss, and differences relating to investments in subsidiaries and jointly controlled entities to the extent that it is probable that they will not reverse in the foreseeable future. In addition, deferred tax is not recognised for taxable temporary differences arising on the initial recognition of goodwill.

Deferred tax is measured at the tax rates that are expected to be applied to temporary differences when they reverse, based on the laws that have been enacted or substantively enacted by the reporting date. Deferred tax assets and liabilities are offset if they relate to income taxes levied by the same tax authority on the same taxable entity, or on different tax entities, but they intend to settle current tax liabilities and assets on a net basis, or their tax assets and liabilities will be realised simultaneously.

A deferred tax asset is recognised to the extent that it is probable that future taxable profits will be available against which the temporary difference can be utilised. Deferred tax assets are reviewed at each reporting date and are reduced to the extent that it is no longer probable that the related tax benefit will be realised.

5. Determination of fair values

Several of the Group's accounting policies and disclosures require the determination of fair value.

When measuring the fair value of an asset or a liability, the Group uses market observable data as far as possible. Fair values are categorised into diverse levels in a fair value hierarchy based on the inputs used in the valuation techniques as follows.

- Level 1: quoted prices (unadjusted) in active markets for identical assets or liabilities
- Level 2: inputs other than quoted prices included in Level 1 that are observable for the asset or liability, either directly (i.e., as prices) or indirectly (i.e. derived from prices).
- Level 3: inputs for the asset or liability that are not based on observable market data (unobservable inputs)

If the inputs used to measure the fair value of an asset or a liability might be categorised in various levels of the fair value hierarchy, then the fair value measurement is categorised in its entirety in the same level of the fair value hierarchy as the lowest level input that is significant to the entire measurement.
The Group recognises transfers between levels of the fair value hierarchy at the end of the reporting period during which the change has occurred.

Fair values have been determined for measurements and/or disclosure purposes based on the following methods. When applicable, further information about the assumptions made in determining fair values is disclosed in the notes specific to that asset or liability.

(i) Land and Buildings

The fair value of land and buildings recognised as a result of a business combination is based on market values. The market value of property is the estimated amount for which a property could be exchanged on the date of valuation between a willing buyer and a willing seller in an arm's length transaction after proper marketing wherein the parties had each acted knowledgeably, prudently and without compulsion.

(ii) Intangible assets

The fair value of customer relationships acquired in a business combination is determined using the Excess Profit Method, whereby the subject asset is valued after deducting a fair return on all other assets that are part of creating the related cash flows.
The fair value of capitalised design and development expenses is determined at acquisition date by using the cost method. After acquisition, the cost of development is recognised as intangible assets based on the cost incurred for each development project meeting the criteria for recognition under IAS 38 – Intangible assets.

Backlog and Customer relationships were valued using the Excess Profit Method whereby the value of an intangible asset is equal to the present value of the after-tax cash flows attributable only to that intangible asset. The value of a specific intangible asset is estimated from the residual earnings after deducing fair returns on all other assets employed (including other intangible assets).
Technology and Trade names were valued using a relief from royalty method consisting in discontinuing estimations of the value of future royalty payments over the life of the assets by owning the asset.

(iii) Inventories

The fair value of inventories acquired in a business combination is determined based on the estimated selling price in the ordinary course of business less the estimated costs of completion and sale, and a reasonable profit margin based on the effort required to complete and sell the inventories.

(iv) Derivatives

The fair value of interest rate swaps is based on broker quotes. Those quotes are tested for reasonableness by discounting estimated future cash flows based on the terms and maturity of each contract and using market interest rates for a similar instrument at the measurement date.

(v) Trade and other receivables

The fair value of trade and other receivables, excluding construction work in progress, is estimated at the present value of future cash flows, discounted at the market rate of interest at the reporting date. This fair value is determined for disclosure purposes or when such assets are acquired in a business combination.

(vi) Other non-derivative financial liabilities

Fair value, which is determined for disclosure purposes, is calculated based on the present value of future principal and interest cash flows, discounted at the market rate of the interest at the reporting date. In respect of the liability component of convertible notes, the market rate of interest is determined by reference to similar liabilities that do not have a conversion option. For finance leases the market rate of interest is determined by reference to similar lease agreements.

6. Financial risk management

Overview

The Group has exposure to the following risks from its use of financial instruments:

- credit risk
- liquidity risk
- market risk.

This note presents information about the Group's exposure to each of the above risks, the Group's objectives, policies and processes for measuring and managing risk, and the Group's management of capital. Further quantitative disclosures are included throughout these consolidated financial statements.

a) Credit risk

Credit risk is the risk of financial loss to the Group if a customer or counterparty to a financial instrument fails to meet its contractual obligations and arises principally from the Group's receivables from customers.

Trade and other receivables, Contract assets

The Group's exposure to credit risk is influenced mainly by the individual characteristics of each customer. The demographics of the Group's customer base, including the default risk of the industry and country in which customers operate, also has an influence on credit risk. Approximately 4,6 percent of the Group's revenue is attributable to sales transactions with a single customer (6,7 percent in 2022). Geographically there is no concentration of credit risk.

The Company has established a credit policy under which each new customer is analysed individually for creditworthiness before the Group's standard payment and delivery terms and conditions are offered.

The Group applies the impairment requirements of IFRS 9 to measure expected credit losses. Refer to note 4.1.(g).

b) Liquidity risk

Liquidity risk is the risk that the Group will not be able to meet its financial obligations as they fall due. The Group's approach to managing liquidity is to ensure, as far as possible, that it will always have sufficient liquidity to meet its liabilities when due, under both normal and stressed conditions, without incurring unacceptable losses or risking damage to the Group's reputation.

The Group has the following undrawn borrowing facilities as per 31 December 2023:

- Revolving credit facility: 12,6 mEUR available credit line (27,3 mEUR as per 31 December 2022). See note 18.
- In addition, the group had cash at hand of 30,0 mEUR per 31 December 2023.
- The Group has set up a factoring program for trade receivables during 2023 – refer to Note 22.

c) Market risk

Market risk is the risk that changes in market prices, such as foreign exchange rates and interest rates will affect the Group's income or the value of its holdings of financial instruments. The objective of market risk management is to manage and control market risk exposures within acceptable parameters, while optimising the return.

The Group buys and sells derivatives, and also incurs financial liabilities, in order to manage market risks.

Currency risk

The Group is exposed to currency risk on sales, purchases and borrowings that are denominated in a currency other than the respective functional currencies of the Group's entities, primarily the EUR (€), but also USD, QAR, RMB, AED, GBP, TWD, SEK, AUD and ZAR.

The principal amounts of the Group's bank loans are denominated in EUR and USD.

Interest rate risk

The Group adopts a policy of ensuring at least 66,67 percent of its exposure to changes in interest rates on borrowings is on a fixed rate basis. This is achieved by entering into interest rate swaps and interest rate caps.

Capital management

The Board's policy is to maintain a strong capital base so as to maintain investor and creditor confidence and to sustain future development of the business through appropriate strategic decisions and cash management.

According to the loan agreement with BNP Paribas Fortis SA/NV, CitiGroup Global Markets Limited, Credit Suisse AG London Branch, Deutsche Bank AG London Branch, HSBC Bank plc, ING Bank N.V. and the Bank of Ireland (as arrangers and agent), the approval of banks is required for a distribution of dividend or a distribution of share premium reserve. In addition, the Group is monitoring a set of covenants as defined in the loan agreement (see note 18). The Group is not subject to other externally imposed capital requirements. Refer to Note 17 for information on capital.

7. Revenue from contracts with customers

a) Disaggregation of revenue from contracts with customers

The Group derives revenue from the completion of projects, services, and transfer of goods over time and at point in time in the following major product lines and geographical regions:

In millions of euro	31/12/2023	31/12/2022
Product Group		
Delivery of Goods	**244,9**	**196,6**
Delivery of goods - At a point in time	244,9	196,6
Projects	**189,5**	**177,5**
Projects - over time	189,5	177,5
Services	**34,9**	**33,3**
Services - At a point in time	10,2	5,0
Services - over time	24,7	28,2
Geographical Area		
Western Europe	45,8	35,4
Central & Eastern Europe	51,6	38,6
Middle-East & Africa	73,9	84,3
America	146,0	125,5
Asia	46,0	47,0
China	23,4	15,4
Australia & New Zealand	40,9	20,0
Other Regions	41,8	41,1

b) Assets and liabilities related to contracts with customers

The Group has recognized the following assets and liabilities related to contracts with customers:

In millions of euro	31/12/2023	31/12/2022
Current contract asset for		
Cost in Excess	**95,1**	**86,4**
Cost in Excess - Valuation Allowance	**-1,7**	**-1,8**
Delivery of goods - Current Contract Asset	22,0	8,2
Projects - Current Contract Asset	68,5	72,3
Services - Current Contract Asset	3,0	4,1
Current Contract Asset - sum of product group	***93,5***	***84,6***
Current contract liability for		
Contract Liability	**24,2**	**27,7**
Prepayments	**12,4**	**13,2**
Delivery of goods - Current Contract Liability	3,7	12,4
Projects - Current Contract Liability	30,1	25,4
Services - Current Contract Liability	2,8	3,1
Contract Liabilities - Sum of product group	***36,6***	***40,9***

c) Revenue recognised in relation to contract liabilities

The following table shows how much of the revenue recognized in the current reporting period relates to carried-forward contract liabilities.

In millions of euro	**31/12/2023**	**31/12/2022**
Revenue recognised that was included in the contract liability balance at the beginning of the period		
Delivery of good	3,7	2,1
Projects	15,5	22,5
Services	1,9	-
Total	***21,1***	***24,6***

The Group did not recognise revenue from performance obligations satisfied in previous periods.

d) Unsatisfied long-term contracts

The aggregate amount of the transaction price allocated to long term contracts that are partially or fully unsatisfied as at 31 December 2023 amount to 422,5 mEUR (417,9 mEUR as at 31 December 2022) and is broken down as follows:

In millions of euro	**31/12/2023**	**31/12/2022**
Unsatisfied long-term contracts - Delivery of good	128,1	112,8
Unsatisfied long-term contracts - Projects	231,6	208,5
Unsatisfied long-term contracts - Services	62,8	96,7
Total	**422,5**	**417,9**

Management expects that 83% of the transaction price allocated to the unsatisfied contracts as of 31 December 2023 will be recognized as revenue during the next reporting period (348,9 mEUR). The remaining 17% (73,6 mEUR) will be recognized in 2025 and 2026 or later respectively. The amount disclosed above does not include variable consideration, which is constrained.

e) Assets recognized from costs to obtain a contract

In addition to the contract balances disclosed above, the Group has also recognized an asset in relation to costs to obtain or costs to fulfil long-term contracts. These are presented on a separated line in the balance sheet.

In millions of euro	**31/12/2023**	**31/12/2022**
Asset recognised from costs incurred to obtain a contract	9,8	16,1
Accumulated amortisation on asset recognised from costs incurred to obtain a contract [1]	-8,2	-14,3
Net assets recognised from costs incurred to obtain a contract	**1,6**	**1,8**

[1] Including a foreign currency difference of the year of 0,2 mEUR

8. Other expenses

Other expenses amounted to 2,7 mEUR (0,3 mEUR in 2022) and include other operating income for 0,2mEUR.

a) Other expenses

In millions of euro	31/12/2023	31/12/2022
Amortisation on asset recognised from costs incurred to obtain a contract	1,4	0,9
Loss on derecognition of Capitalised Development costs under construction	0,0	1,3
Loss on disposal of fixed assets	0,8	0,0
Gain on disposal of fixed assets	0,0	-1,1
Foreign exchange gain/loss on Intercompany recharges	0,6	0,2
Other operating expenses / income	-0,2	-1,0
Total	**2,7**	**0,3**

b) Expenses by nature

In millions of euro	31/12/2023	31/12/2022
Raw materials and consumables	184,2	145,2
Personnel expenses	117,1	107,9
Professional services	65,0	69,7
Freight	14,8	15,6
Supplies	10,9	12,4
Travel expenses	10,9	9,1
Maintenance	8,6	7,9
Insurance	2,2	2,8
Audit	1,1	1,2
Leases	2,3	2,0
Recruitment expenses	0,7	0,8
Amortization of cost to fulfil a contract	1,4	0,9
Amortization of intangible assets	41,7	40,4
Depreciation of tangible assets	8,4	7,5
Impairment loss on goodwill and intangible assets	5,8	1,5
Impairment losses on trade receivables and contract assets	-0,8	0,1
Other expenses by nature	-18,0	-16,3
Total	**456,2**	**408,6**

In 2023, an impairment loss on the goodwill has been booked for 5,8 mEUR, see note 13.
The line Other expenses by nature is mainly made up of development expenditures capitalized during the year.

9. Personnel

a) Personnel expense

In millions of euro	31/12/2023	31/12/2022
Salaries and wages	97,1	91,5
Social security contributions	13,1	10,6
Contributions to defined contribution plans	0,9	0,9
Expenses related to defined benefit plans	0,7	0,9
Other personnel expenses	5,3	4,1
Total	**117,1**	**107,9**

b) Employment – average number of employees

	31/12/2023	31/12/2022
Headcount - Average		
White collar, on payroll	1.056	1.068
White collar, interim not on payroll	34	41
Blue collar, on payroll	246	200
Blue collar, interim not on payroll	3	13
Total	**1.339**	**1.322**
Fulltime-equivalent - Average		
White collar, on payroll	1.037	1.064
White collar, interim not on payroll	32	38
Blue collar, on payroll	245	195
Blue collar, interim not on payroll	3	7
Total	**1.317**	**1.303**

10. Finance income and expense, recognized in statement of profit or loss

In millions of euro	**31/12/2023**	**31/12/2022**
Finance income		
Interest Income	0,1	0,0
Net foreign currency gain	12,3	18,0
	12,3	**18,1**
Finance expenses		
Net foreign currency loss	-7,6	-27,1
Interest Expense on Lease Liabilities	-1,4	-0,5
Interest Expense at amortised costs	-57,5	-36,4
Bank Charges - Other	-5,8	-4,9
Loss on disposal of Fixed Assets	0,0	-0,2
	-72,2	**-69,1**
Net finance expenses recognised in profit and loss	**-59,9**	**-51,1**
Recognised in other comprehensive income		
Foreign currency translation differences for foreign operations	-5,9	2,0
Effective portion of changes in fair value of cash-flow hedges	-8,7	11,0
Recognised in other comprehensive income	**-14,6**	**13,0**

11. Tax expense, Deferred Tax Assets and Liabilities

The tables below present the major components of income tax expense and the reconciliation of tax expense and profit multiplied by the Group's domestic tax rate for the years ended 31 December 2023 and 2022:

in millions of euro	For the year ended 31/12/2023	For the year ended 31/12/2022
Current tax expense		
Current period (+ Income / - Expense)	-3,7	-4,0
Adjustments for prior periods (+ Income / - Expense)	-0,1	0,2
Total current tax (+ Income / - Expense)	**-3,8**	**-3,8**
Deferred tax expense		
Total deferred tax (+ Income / - Expense)	9,6	11,7
Total tax (+ Income / - Expense)	**5,8**	**7,9**
Reconciliation of effective tax rate		
Result before tax (loss)	-46,8	-52,3
Income tax using the Company's domestic tax rate (Luxembourg)	11,7	13,0
Effect of tax rates in foreign jurisdictions	1,0	0,2
Effect of non-deductible expenses	-10,6	-9,7
Effect of tax-exempted income	2,0	0,6
Utilisation of previously unrecognized tax losses	2,6	1,8
Effect of current year tax losses for which no deferred tax asset was recognised	-1,1	-1,3
Current tax adjustments for prior periods	0,0	0,2
Deferred tax adjustments for prior periods	0,0	2,5
Other	0,2	0,4
Income tax recognised in the income statement (+ Income / - Expense)	**5,8**	**7,9**

In 2023, the Group's tax rate has not been affected by major tax reforms.

	31/12/2023	31/12/2022
Current tax receivables	2,4	1,5
Current tax liabilities	3,8	2,0

Due to the scale and global presence of ADB Safegate, the Group is operating in many jurisdictions. The increased complexity of tax law, the continuous changes in tax law and of its interpretation with respect to matters such as transfer pricing adds uncertainty over certain income tax treatments. The effect of uncertainty in determining tax positions is disclosed when the Group considers it more likely than not that a tax position taken may not be sustained if challenged by the tax authorities. Such effect is accounted for as a liability when the Group considers it is not probable that a tax position taken will be accepted by the tax authorities and after exhausting all legal remedies. No effect of uncertainties has been recognized and no disclosure for uncertainties has been made on 31 December 2023.

Deferred tax relates to the following:

	Assets		Liabilities		Net	
In millions of euros	31/12/2023	31/12/2022	31/12/2023	31/12/2022	31/12/2023	31/12/2022
Non-current assets						
Goodwill	0,3	0,2	0,0	0,0	0,3	0,2
Intangible assets	0,1	0,5	58,9	65,3	-58,9	-64,7
Shares	0,0	0,0	0,4	0,4	-0,4	-0,4
Property, plant and equipment	0,0	0,0	5,9	2,0	-5,9	-2,0
Financial assets, interest free	0,0	0,0	0,6	0,0	-0,6	0,0
Other non-current assets	0,0	0,1	0,0	0,0	0,0	0,1
Costs incurred to obtain or fulfil a contract	0,0	0,0	0,2	0,0	-0,2	0,0
Non-current liabilities						
Loans and borrowings, interest bearing	0,0	0,0	1,3	1,9	-1,3	-1,9
Liabilities for post-employment and other LT	0,1	0,0	0,1	0,2	0,0	-0,1
Provisions	0,0	0,0	0,4	0,2	-0,3	-0,2
Lease Liabilities - LT	4,4	0,5	0,0	0,0	4,4	0,5
Current assets						
Inventories	1,2	1,3	0,1	0,0	1,1	1,3
Trade and other receivables, interest free	2,1	0,6	1,9	1,6	0,2	-1,0
Other current assets	0,0	0,0	0,1	0,3	-0,1	-0,3
Cash and cash equivalents	0,0	0,1	0,0	0,0	0,0	0,1
Current liabilities						
Loans and borrowings, interest bearing	5,4	4,2	0,0	0,1	5,4	4,2
Trade and other payables, interest free	1,8	1,3	0,9	0,2	0,9	1,1
Provisions	0,4	0,6	0,1	0,1	0,3	0,5
Other current liabilities	1,1	0,2	0,1	-0,1	1,0	0,3
Lease Liabilities - ST	0,5	0,4	0,0	0,0	0,5	0,4
Unused tax loss	**8,3**	**7,3**			**8,3**	**7,3**
Tax credits	**0,1**	**0,1**			**0,1**	**0,1**
Total	**25,8**	**17,5**	**70,9**	**72,1**	**-45,1**	**-54,5**
Off Set	-25,6	-17,3	-25,6	-17,3		
Net	**0,2**	**0,3**	**45,2**	**54,8**		

Unrecognized losses

	31/12/2023		31/12/2022	
In millions of euro	Base	Unrecogn. Deferred Tax	Base	Unrecogn. Deferred Tax
Fiscal Losses	4,4	1,1	16,9	4,3
Impairment Losses	5,8	1,5	1,5	0,4
Total	10,2	2,6	18,3	4,7

In 2023, the effect of current year tax losses for which no deferred tax asset was recognized amounts to 2,6 mEUR (4,7 mEUR in 2022) and is mainly explained by the following elements: current tax losses mainly generated by the holding companies in Belgium and Luxembourg were not recognized as deferred tax assets. Moreover, the Group has impaired a part of its goodwill.

On a cumulative basis a total of 27,0 mEUR deferred taxes remained unrecognized (25,9 mEUR as at 31 December 2022).

In millions of Euro	31/12/2023	31/12/2022
Accumulated deferred tax assets not recognised	27,0	25,9

In Luxembourg, the tax losses can be carried forward for maximum 17 years. In Belgium, the tax losses can be carried forward indefinitely. Deferred tax assets have not been recognised in respect of these items because there is not yet a sufficient degree of certainty that future taxable profits will be available in the holding entities against which the Group can utilise the benefits therefrom, before actually recognising these. The Group reassess at each reporting period whether a previously unrecognized deferred tax asset can be recognized because it has become probable that future taxable profit will allow the deferred tax asset to be recovered.

The Organization for Economic Co-operation and Development (OECD)/G20 Inclusive Framework on Base Erosion and Profit Shifting published the Pillar Two model rules (the "Pillar Two legislation") designed to address the tax challenges arising from the digitalization of the global economy.
The Group has performed its initial assessment and determined to be out of scope for Pillar Two. Giving the continuous growth and Group set up, management will continue to monitor and evaluate any potential impact such as:

- Assessing the tax losses available (in Luxembourg and in other jurisdictions) and the possibility to recognize these losses as deferred tax assets in the financial statements;

- Determining its Ultimate Parent Entity, as this one may differ from the reporting entity determined in the context of the Country-by-Country Reporting rules;

- Assessing the impact of the Income Inclusion Rules and the Qualified Domestic Minimum Top-up Taxes defined in the Law of 22nd December 2023 transposing the Pillar Two Legislation in the Luxembourg Law.

12. Property, plant and equipment

in millions of euro	Land and building	Plant and equipment	Fixtures and installations	Assets under construction	Total
Cost					
1/01/2023	**31,7**	**14,2**	**27,9**	**2,7**	**76,5**
Additions	19,3	1,2	6,3	4,0	30,8
Disposals and reclassifications	-3,2	-1,1	0,5	-4,1	-7,8
Effect of movements in exchange rates	-0,6	-0,2	-0,4	-0,1	-1,3
31/12/2023	**47,2**	**14,2**	**34,2**	**2,6**	**98,3**
Depreciation and impairment losses					
1/01/2023	**18,1**	**11,2**	**21,2**	**0,0**	**50,5**
Depreciation for the period	3,9	1,0	3,6	0,0	8,4
Disposals and reclassifications	-3,1	-2,1	-0,5	0,0	-5,7
Effect of movements in exchange rates	-0,2	-0,1	-0,3	0,0	-0,6
31/12/2023	**18,7**	**10,0**	**24,0**	**0,0**	**52,6**
Carrying amounts					
1/01/2023	**13,6**	**3,0**	**6,7**	**2,7**	**26,0**
31/12/2023	**28,5**	**4,2**	**10,3**	**2,6**	**45,6**

During the period, the Group recognised a right-of-use asset of 16,0 mEUR for the lease of a new building in the US (refer to note 23) and, related to this new premise, the Group purchased furniture and fixtures for an amount of 4,7 mEUR. The disposals relate mainly to derecognition of leased assets (refer to note 23) and reclassifications relate to assets under construction transferred to other asset classes.

in millions of euro	Land and building	Plant and equipment	Fixtures and installations	Assets under construction	Total
Cost					
1/01/2022	**39,2**	**13,4**	**25,9**	**1,9**	**80,4**
Additions	2,0	1,0	3,4	2,2	8,6
Disposals and reclassifications	-9,6	-0,3	-1,7	-1,3	-12,8
Effect of movements in exchange rates	0,0	0,0	0,4	0,0	0,3
31/12/2022	**31,7**	**14,2**	**28,0**	**2,7**	**76,5**
Depreciation and impairment losses					
1/01/2022	**17,8**	**10,2**	**19,5**	**0,0**	**47,5**
Depreciation for the period	3,2	1,2	3,1	0,0	7,5
Disposals and reclassifications	-2,7	-0,3	-1,6	0,0	-4,6
Effect of movements in exchange rates	-0,2	0,0	0,2	0,0	0,0
31/12/2022	**18,1**	**11,2**	**21,2**	**0,0**	**50,5**
Carrying amounts					
1/01/2022	**21,4**	**3,2**	**6,4**	**1,9**	**32,9**
31/12/2022	**13,6**	**3,0**	**6,7**	**2,7**	**26,0**

13. Intangible assets and Goodwill

In millions of euro	Goodwill	Client relations	Software Licences	Patents	Trademarks	Technology	Other Intangible Assets	Total
Cost								
01/01/2023	**519,3**	**333,8**	**17,5**	**1,0**	**34,3**	**113,8**	**45,0**	**1.064,7**
Acquisitions	0,0	0,0	0,3	0,0	0,0	16,8	0,1	17,2
Disposals & reclassifications	0,0	0,0	1,2	0,0	0,0	-0,5	0,0	0,7
Effect of movements in exchange rates	-5,4	-3,5	-0,1	0,0	-0,4	-0,4	-0,7	-10,4
31/12/2023	**513,9**	**330,3**	**18,9**	**1,0**	**33,9**	**129,8**	**44,3**	**1.072,2**
Amortization and impairment losses								
01/01/2023	**325,8**	**115,2**	**11,0**	**1,0**	**12,9**	**56,9**	**41,8**	**564,7**
Amortisation during the period	0,0	23,5	1,9	0,0	2,4	11,1	2,6	41,7
Impairment loss	5,8	0,0	0,0	0,0	0,0	0,0	0,0	5,8
Disposals and reclassifications	0,0	0,0	-0,2	0,0	0,0	-0,4	0,0	-0,7
Effect of movements in exchange rates	-1,4	-1,1	-0,1	0,0	-0,1	-0,2	-0,7	-3,6
31/12/2023	**330,3**	**137,6**	**12,7**	**1,0**	**15,1**	**67,4**	**43,8**	**608,0**
Carrying amounts								
01/01/2023	**193,5**	**218,6**	**6,5**	**0,0**	**21,4**	**56,9**	**3,1**	**499,9**
31/12/2023	**183,6**	**192,7**	**6,2**	**0,0**	**18,8**	**62,4**	**0,5**	**464,2**

In millions of euro	Goodwill	Client relations	Software Licences	Patents	Trademarks	Technology	Other Intangible Assets	Total
Cost								
01/01/2022	**521,2**	**334,1**	**15,8**	**1,1**	**34,4**	**102,0**	**44,1**	**1.052,6**
Acquisitions through business combinations	-0,3	0,0	0,0	0,0	0,0	0,0	0,0	-0,3
Other acquisitions	0,0	0,0	0,4	0,0	0,0	15,2	0,2	15,8
Disposals & reclassifications	-0,1	0,0	1,2	0,0	0,0	-2,3	0,0	-1,2
Effect of movements in exchange rates	-1,5	-0,3	0,1	-0,1	-0,1	-1,1	0,7	-2,3
31/12/2022	**519,3**	**333,8**	**17,5**	**1,0**	**34,3**	**113,8**	**45,0**	**1.064,7**
Amortization and impairment losses								
01/01/2022	**333,4**	**91,8**	**9,1**	**1,1**	**10,4**	**47,8**	**38,5**	**532,2**
Acquisitions through business combinations	0,0	0,0	0,0	0,0	0,0	0,0	0,0	0,0
Amortisation during the period	0,0	24,2	1,8	0,0	2,5	9,0	3,0	40,4
Impairment loss	0,0	0,0	0,0	0,0	0,0	1,5	0,0	1,5
Disposals and reclassifications	0,0	0,0	0,0	0,0	0,0	-0,8	0,0	-0,8
Effect of movements in exchange rates	-7,6	-0,8	0,1	-0,1	-0,1	-0,4	0,3	-8,5
31/12/2022	**325,8**	**115,2**	**11,0**	**1,0**	**12,9**	**56,9**	**41,8**	**564,7**
Carrying amounts								
01/01/2022	**187,8**	**242,3**	**6,6**	**0,0**	**24,0**	**54,2**	**5,5**	**520,4**
31/12/2022	**193,5**	**218,6**	**6,5**	**0,0**	**21,4**	**56,9**	**3,1**	**499,9**

The remaining amortisation period of the client relations intangible asset is 7 years.

Impairment testing for cash-generating units containing goodwill

For the purpose of impairment testing, goodwill is allocated to the Group's operating divisions which represent the lowest level within the Group at which the goodwill is monitored for internal management purposes.

For the exercise ending 31 December 2023, the Group defined four cash generating units:

- Americas
- Weather
- Rest of the World
- Airport Systems.

The aggregate carrying amounts of goodwill allocated to each unit, on 31 December 2023, are as follows:

in millions €	Carrying amount of goodwill 31/12/2023	Carrying amount of goodwill 31/12/2022
Americas	128,2	131,8
Weather	10,0	10,3
Rest of world	36,6	36,8
Airport Systems	8,7	14,6
Total	**183,6**	**193,5**

The recoverable amount is based on its value in use. Value in use is determined by discounting the future cash flows generated from the continuing use of the unit and is based on the following key assumptions for discount rates (based on detailed WACC analysis) and perpetual growth rates:

	Parameters of the model applied to cash flow forecasts			
	Discount rates	Perpetual Growth rates	Discount rates	Perpetual Growth rates
in millions €	31/12/2023	31/12/2023	31/12/2022	31/12/2022
Americas	11,2%	2,1%	11,2%	2,1%
Weather	11,4%	2,1%	11,2%	2,1%
Rest of world	10,8%	2,0%	11,1%	2,0%
Airport Systems	12,2%	2,1%	13,1%	2,1%

The Fair Value less Cost to sell was not considered to determine the recoverable amount as management estimates that it would not result in a higher value than the value in use, because the cash flows generated by the CGUs are estimated to be greater than the proceeds from selling the assets.

Impairment tests have been performed as per 31 December 2023 using cash flow projections from the budget for 2024 approved by the Board of Directors in January 2024 and from the business long range plan for 2025-2026, based on market data and management estimates.
The value in use for cash-generating units 'America', 'Weather' and 'Rest of world' exceeds their carrying amount hence no impairment loss has been recognised. However, the value in use for the cash-generating unit Airport Systems (estimated at 4,1 mEUR) did not exceed its carrying amount and therefore an impairment loss of 5,8 mEUR has been recognized in 2023. The impairment loss is in part due to the management decision to gradually phase out a part of the product portfolio, mainly historical products not anymore competitive on the market, and to focus on deployment and development of higher-margin products in Airport Systems. The expected decrease in revenues in 2024 to 2026 and recovery of growth in subsequent years has created evidence for the need to impair the value of the CGU. The fair value less cost to sell would not result in a higher recoverable amount because the current technology is outdated.

	Impairment losses recognized in the period
in millions €	31/12/2023
Americas	0,0
Weather	0,0
Rest of world	0
Airport Systems	-5,8
Total	**-5,8**

The Group has leveraged on following information sources and assumptions to value the four CGUs:

- 2023 actual figures
- 2024 budget figures approved by the Board
- 2025-2026 long range business plan
- The impact of continuous improvement measures on profitability during the 5 years
- Assumptions of long-term growth rates from year 5 for the terminal value.

The calculation of value in use for the four CGUs is sensitive to the following assumptions:

- Revenues: annual growth rate over the five-year forecast period, based on past performance and management's expectations of market development; 5,4% average growth rate for CGU Americas, 4,9% average growth rate for CGU Weather, 8,5% average growth rate for CGU Rest of World and -9,6% average growth rate for CGU Airport Systems.
- Sales margin: based on past performance, management's expectations for the future, on current industry trends and long-term inflation forecasts; average of 35,5% for CGU Americas, 44,1% for CGU Weather, 34,7% for CGU Rest of World, and 40,9% for CGU Airport Systems.

- Discount rates: the discount rate calculation is based on the specific circumstances of the Group and is derived from its weighted average cost of capital (WACC). The WACC takes into account both debt and equity. The cost of equity is derived from the revenue-weighted aggregated risk profile of CGU activities, based on the Beta of the individual CGU portfolio activities. The cost of debt is based on the relevant prevailing interest levels of the CGU weighted by the relative share of each activity in the CGU. The beta factors are evaluated annually based on publicly available market data.
- Growth rates used to extrapolate cash flows beyond the forecast period: the computed perpetual growth rate for each CGU is based on the long-term inflation expectation for the currency in which the business plan of each CGU was prepared.

Budget 2024 figures are supported by air traffic recovery, innovation success, accelerating Airside 4.0 market traction and strict cost control. For the 2025/2028 plan, figures are based on expectations, reflecting reasonable vision of the markets addressed by the Group.

The long-range business plan also incorporates the impact of climate-related matters and their potential impact on the development of the business. Whereas longer term growth trends may be affected by climate concerns, the aviation sector as a whole and air travel are still expected to continue to grow longer term given the crucial role aviation plays in modern society. In the short and medium term, the Group also sees additional interest in replacing halogen airfields by LED or other latest technology lighting, having a positive impact on business.
In order to assess the figures of the terminal value, comparisons were conducted for each CGU between the average annual growth from 2024 to Term year reference and the perpetual growth rates retained. The perpetual growth rates retained are lower than the calculated average for all CGUs.
Consequently, management considers that the key parameters used in the calculation of the recoverable amounts of the assets, amongst others the 5-years business assumptions, the perpetual growth rates and the weighted average cost of capital, were appropriate.

Sensitivity analysis of the value in use of cash-generating units to the assumptions made
The following table shows the sensitivity of enterprise value to the specific premium used in the discount rate calculation and in the perpetual growth rate:

In millions of euro	Outcome of the impairment	Specific Premium - Discount rates	Perpetual Growth rates
Americas	76,5		
50 bps increase		-14,0	10,0
50 bps decrease		15,5	-9,0
Weather	13,8		
50 bps increase		-2,4	1,6
50 bps decrease		2,6	-1,4
Rest of world	112,6		
50 bps increase		-27,4	16,2
50 bps decrease		29,2	-15,8
Airport Systems	-5,8		
50 bps increase		-0,2	0,2
50 bps decrease		0,3	-0,2

The table shows the sensitivity of the calculated headroom ("outcome of the impairment") for a change in the discount rate and the perpetual growth rate. The outcome of the impairment test shows a headroom of 76,5 mEUR for the CGU Americas (2022: headroom of 35,5 mEUR), a headroom of 13,8 mEUR for the CGU Weather (2022: headroom of 23,4 mEUR), a headroom of 112,6 mEUR for the CGU Rest of world (2022: headroom of 95,8 mEUR), and no headroom for the CGU Airport Systems hence a need for an impairment of 5,8 mEUR (2022: headroom of 3,4 mEUR).
An impairment loss would need to be recognized in case the discount rate would increase to the following rate (all other assumptions being constant)

- from 11,2% to 14,8% in the CGU Americas would result in an impairment of its goodwill;
- from 11,4% to 15,4% in the CGU Weather would result in an impairment of its goodwill;
- from 10,8% to 13,4% in the CGU Rest of World would result in an impairment of its goodwill.

Similar sensitivity analyses were conducted for the revenue growth rate and for the sales margin. For the revenue growth rate, an impairment loss would need to be recognized (or would increase) in case the revenue growth rate would fall to the following rate (all other assumptions being constant)

- from 5,4% on average to 0,0% in the CGU Americas would not result in an impairment of its goodwill;
- from 4,9% on average to 0,0% in the CGU Weather would not result in an impairment of its goodwill;
- from 8,5% on average to 5,0% in the CGU Rest of World would result in an impairment of its goodwill;
- From -9,6% on average to -15,0% in the CGU Airport Systems would result in an additional impairment of its goodwill by 1,8 mEUR.

For the sales margin, an impairment loss would need to be recognized (or would increase) in case the sales margin would fall to the following rate (all other assumptions being constant)

- from 35,5% to 29,4% in the CGU Americas would result in an impairment of its goodwill;
- from 44,1% to 37,0% in the CGU Weather would result in an impairment of its goodwill;
- from 34,7% to 31,7% in the CGU Rest of World would result in an impairment of its goodwill;
- from 40,9% to 35,0% in the CGU Airport Systems would result in an additional impairment of its goodwill by 2,3 mEUR.

14. Inventories

In millions of euro	**31/12/2023**	**31/12/2022**
Raw materials and consumables	31,8	25,7
Semi-finished goods	2,8	1,5
Finished goods	15,8	22,5
Advances for Inventories	0,0	0,1
Goods in Transit	5,2	7,1
Total	**55,7**	**57,0**

In 2023, inventories of 184,2 mEUR were recognized as expense during the period and included in cost of sales against 145,2 mEUR in 2022 (see note 8).

Inventories are shown net of write downs for obsolescence, amounting to 9,4mEUR as of 31 December 2023 (10,3 mEUR as of 31 December 2022).

15. Trade and other receivables, Contract Assets

In millions of euro	31/12/2023	31/12/2022
Trade and other receivables		
Trade Receivables	91,5	84,9
Invoices to be Issued to Customers	0,0	0,4
Cost Unbilled Contracts	0,1	0,0
Cost in Excess	93,5	84,6
Total	**185,1**	**169,9**
Non-current	0,0	0,0
Current	185,1	169,9

Advances for which the related work has not started and billings in excess of costs are presented as Contract liabilities (see note 7).

Cost in excess is classified as current but includes amounts that do not expect to realize or settle within the 12 months after the reporting period. Approximately 1,3 mEUR is expected to be realized or settled after more than 12 months.

Trade receivables are presented net of advance payments received.

Trade Receivables and Contract Assets are shown net of impairment amounting to 5,6 mEUR as of 31 December 2023 (7,5 mEUR as of 31 December 2022) split into 3,9 mEUR Loss allowance on Trade Receivables and 1,7 mEUR Loss allowance on Contract Assets (respectively 5,7 mEUR and 1,8 mEUR as of 31 December 2022). Refer also to note 22.

The loss allowance as at 31 December 2023 and 31 December 2022 was determined as follows for both trade receivables and contract assets:

31/12/2023 - in millions of euro	Current	From 0 to 30 days past due	From 31 to 60 days past due	From 61 to 90 days past due	From 91 to 120 days past due	Over 121 days	Total
Expected loss rate	0,2%	0,3%	0,3%	0,3%	0,4%	9,4%	
Gross carrying amount – trade receivables net of prepayments	40,7	17,4	6,9	3,3	1,6	13,1	**83,1**
Gross carrying amount – contract assets	2,8	20,3	13,5	9,2	6,9	42,4	**95,1**
Loss allowance - trade receivables	0,0	-0,1	-0,1	0,0	0,0	-3,7	**-3,9**
Loss allowance - contract assets	0,0	0,0	0,0	0,0	0,0	-1,6	**-1,7**

31/12/2022 - in millions of euro	Current	From 0 to 30 days past due	From 31 to 60 days past due	From 61 to 90 days past due	From 91 to 120 days past due	Over 121 days	Total
Expected loss rate	0,1%	0,5%	0,4%	0,1%	1,3%	10,9%	
Gross carrying amount – trade receivables net of prepayments	43,0	12,0	3,8	0,3	2,1	16,2	**77,4**
Gross carrying amount – contract assets	4,1	9,3	5,9	8,2	9,2	49,8	**86,4**
Loss allowance - trade receivables	-0,1	-0,1	0,0	0,0	0,0	-5,5	**-5,7**
Loss allowance - contract assets	0,0	0,0	0,0	0,0	-0,1	-1,7	**-1,8**

The closing loss allowances for trade receivables and contract assets as at 31 December 2023 reconcile to the opening loss allowances as follows:

In millions of euro	Contract Assets	Trade receivables
Opening loss allowance as at 1 January 2023	**-1,8**	**-5,7**
Provisions increased during the period	-0,1	-0,2
Provisions used during the period	0,0	1,0
Provisions reversed during the period	0,2	0,9
Foreign Currency Translation	0,0	0,2
Closing loss allowance as at 31 December 2023	**-1,7**	**-3,9**

The closing loss allowances for trade receivables and contract assets as at 31 December 2022 reconcile to the opening loss allowances as follows:

In millions of euro	Contract Assets	Trade receivables
Opening loss allowance as at 1 January 2022	**-1,7**	**-5,9**
Provisions increased during the period	-0,2	-0,7
Provisions used during the period	0,0	0,4
Provisions reversed during the period	0,1	0,7
Foreign Currency Translation	-0,1	-0,2
Closing loss allowance as at 31 December 2022	**-1,8**	**-5,7**

16. Cash and cash equivalents

In millions of euro	31/12/2023	31/12/2022
Bank balances	30,1	34,2
Cash and cash equivalents in the statement of financial position	**30,1**	**34,2**
Cash and cash equivalents in the statement of cash flows	**30,1**	**34,2**

The Group has only cash balances outstanding at financial institutions with at least an "A" credit rating attributed by Standard & Poor's, except for Standard Bank in South Africa for an amount of 0,4 mEUR as of 31 December 2023 (0,4 mEUR as of 31 December 2022), which has a "B" rating.
The Group has restricted cash balances of 6,9 mEUR that are not available for use by the Group because they are held by subsidiaries operating under exchange controls.

17. Capital and reserves

Share capital

ADB Luxembourg 1 S.à r.l., with registered office at 14-16 Avenue Pasteur, L-2310 Luxembourg, and registered with the Luxembourg Register of Commerce and Companies under number B 217137, was constituted on 11 August 2017 with a capital of 12,000 EUR divided in 12,000 ordinary shares, with a nominal value of 1.00 EUR.

On 3 October 2017, the share capital was further increased by 426,488,000 EUR (out of which 404,0 mEUR in cash) so as to bring total share capital to an amount of 426,5 mEUR through (i) the issuance of 18,071,600 new ordinary shares with a nominal value of 1,00 EUR, (ii) the issuance of 395,616,400 new A preferred shares with a nominal value of 1,00 EUR and (iii) the issuance of 12,800,000 new B preferred shares with a nominal value of 1.00 EUR per share.

On 20 July 2022, the share capital was further increased by 40,0 mEUR in cash to bring total share capital to an amount of 466,5 mEUR through the issuance of 40,000,000 new class C preferred shares with a nominal value of 1,00 EUR.

All shares issued are fully paid. All shares have equal voting rights. The economic rights attached to the Shares are specific to each class of Shares:

- the A Preferred Dividend or the C Preferred Dividend may only be paid provided that the allocation to the legal reserve and/ or any other allocations have been made and is subject, in any case, to the prior approval of such distribution by the Shareholders.
- the payment of the A Preferred Dividend attached to the A Preferred Shares is subordinated to the full payment of any C Preferred Dividend attached to the C Preferred Shares.
- the financial rights attached to B Preferred Shares are subordinated to the reimbursement of the subscription price of all the A Preferred Shares and to the full payment of any A Preferred Dividend attached to the A Preferred Shares and the C Preferred Dividend attached to the C Preferred Shares. The Preferred B Dividend shall be determined on the exit date (unknown).
- Each Ordinary Shares entitles its holder to a right to any kind of dividend distribution decided by the company after payment of the C Preferred Dividend, of the A Preferred Dividend and of the B Preferred Dividend.

The Shares held by each Shareholder may only be transferred in accordance with the Articles, Shareholder Agreement and any future agreement to be entered between the Shareholders. Except in case of Unrestricted Transfer (as defined in the Shareholders Agreement) the prior written consent of the Majority Investor is also required for any Transfer by the Shareholders, of part or all of their Shares during a lock-up period of eight (8) years as from 11 August 2017.

After the expiry of the lock-up period, and except in case of an Unrestricted Transfer, the shares held by the Shareholders may only be transferred to any non-Shareholder transferee with the prior approval of one or more Shareholders representing at least three quarters of the Company's share capital.

Additionally, in accordance with art 710-23 of the Luxembourg law of 10 August 1915, as amended, the Company is required to allocate to a legal reserve a minimum of 5% of its annual net profit until this reserve equals 10% of the issued share capital. This reserve may not be distributed.

Reserves

The reserves include (1) a translation reserve comprising all foreign currency differences arising from the translation of the financial statements of foreign operations, (2) a hedging reserve on foreign currency forward contracts, designated as cash flow hedges and (3) a reserve for own shares resulting from the purchase of treasury shares.

Dividends

No dividend distribution was proposed by the Directors.

18. Loans and borrowings

This note provides information about the contractual terms of the Group's interest-bearing loans and borrowings, which are measured at amortised cost.

In millions of euro	31/12/2023	31/12/2022
Secured bank loans	603,9	588,8
Lease Liabilities	19,4	4,0
Non-current liabilities	**623,3**	**592,9**
Short term portion of secured debt	0,0	0,0
Recourse Factoring	2,8	0,0
Revolving facility	67,5	53,0
Accrued Interests on senior loans	4,3	3,4
Lease Liabilities	2,8	2,9
Current liabilities	**77,5**	**59,3**
Total loans and borrowings	**700,8**	**652,2**

To finance the acquisition of the Group, ADB Safegate Luxembourg 1 S.à r.l. and its subsidiaries entered into a Senior Facilities Agreement and a Second Lien Facility Agreement for a total amount of 585,5 mEUR with BNP Paribas Fortis SA/NV, Citigroup Global Markets Limited, Credit Suisse AG London Branch, Deutsche BankAG London Branch, HSBC Bank plc, ING Bank N.V. and the Bank of Ireland on 3 October 2017.
The Group has access to a Revolving Credit Facility (RCF), which amounts to 80,0 mEUR. As of 31 December 2023, the undrawn amount equals to 12,6 mEUR (27,3 mEUR as of 31 December 2022).
In July 2022, the Senior Facilities Agreement and the Second Lien Facility Agreement were amended, with extended maturity date and increased margin on interest rate, as indicated below:

In millions of euro	Currency	Nominal interest rate	Year of maturity	Face value	Carrying amount 31/12/2023
Secured bank loan - 1st Lien	EUR	Euribor[1] + Margin[2]	2026	344,0	341,5
Secured bank loan - 1st Lien	USD	SOFR[1] + Margin[3]	2026	130,5	130,5
Secured bank loan - 2nd Lien	USD	SOFR[1] + Margin[4]	2027	134,9	135,2
Secured Bank Loan ADB SG Germany - EUR	EUR	Fixed 1.70%	2026	0,3	0,3
Governmental R&D Loan - ADB SG Austria -	EUR	Fixed 2.00%	2028	0,2	0,2
Revolving facility	EUR	Euribor[1] + Margin[5]	2025	52,0	52,1
Revolving facility	USD	SOFR[1] + Margin[5]	2025	15,4	15,4
Total interest-bearing liabilities				**677,2**	**675,0**

(1) There is a 0% interest rate floor on Euribor and 1% on SOFR. Interest rates cannot drop below this interest rate floor
(2) Margin is at 4,75% as per 31 December 2023 and shall depend on Senior debt cover
(3) Margin is at 4,75% as per 31 December 2023 and shall depend on Senior debt cover
(4) Margin is at 8,25% as per 31 December 2023 and shall depend on Senior debt cover
(5) Margin is at 4,50% as per 31 December 2023 and shall depend on Senior debt cover

In millions of euro	Currency	Nominal interest rate	Year of maturity	Face value	Carrying amount 31/12/2022
Secured bank loan - 1st Lien	EUR	Euribor[1] + Margin[2]	2026	344,0	338,5
Secured bank loan - 1st Lien	USD	Libor[1] + Margin[3]	2026	134,5	133,8
Secured bank loan - 2nd Lien	USD	Libor[1] + Margin[4]	2027	120,6	120,1
Secured Bank Loan ADB SG Germany - EUR	EUR	Fixed 1.70%	2026	0,4	0,4
Revolving facility	EUR	Euribor[1] + Margin[5]	2025	37,0	37,0
Revolving facility	USD	Libor[1] + Margin[5]	2025	15,9	15,9
Total interest-bearing liabilities				**652,4**	**645,7**

(1) There is a 0% interest rate floor on Euribor and 1% on Libor. Interest rates cannot drop below this interest rate floor

(2) Margin is at 4,75% as per 31 December 2022 and shall depend on Senior debt cover

(3) Margin is at 4,75% as per 31 December 2022 and shall depend on Senior debt cover

(4) Margin is at 8,25% as per 31 December 2022 and shall depend on Senior debt cover

(5) Margin is at 4,50% as per 31 December 2022 and shall depend on Senior debt cover

in millions of euro	31/12/2023	31/12/2022
Senior Loans		
Proceeds from issue of senior loans	610,2	599,4
Transaction Costs	-6,3	-10,6
Accrued Interests	4,3	3,2
Carrying amount of liability	**608,2**	**592,1**
Revolving Facility		
Proceeds from issue of revolving facility	67,5	53,0
Accrued Interests	0,0	0,1
Carrying amount of liability	**67,6**	**53,1**

In 2017, the Group incurred 18,5 mEUR of transaction costs in respect of the senior loan facilities which are recognised in the statement of profit and loss in accordance with the effective interest method over the expected repayment schedule of the different tranches of the loan facilities.

The Group incurred transaction costs in respect of the acquisition of the Ultra Electronics Airport Systems group for 1,3 mEUR in 2019.

In July 2022, the Group incurred 5,9 mEUR of transaction costs in respect of the amendment and extension of the senior loan facilities. This renegotiation was treated as a non-substantial modification of the debt in accordance with IFRS 9. Therefore, the costs incurred are recognised in the statement of profit and loss in accordance with the effective interest method over the remaining amended repayment schedule of the different tranches of the loan facilities.

In 2023, the amortization expense of those transaction costs amounted to 4,2 mEUR (3,5 mEUR in 2022).

Changes in liabilities arising from financing activities

in millions of euro	Senior Loans	Revolving Facility	Transaction Costs	Leases	Recourse Factoring	Accrued Interests	Total
Balance at 01/01/2023	**599,4**	**53,1**	**-10,6**	**7,0**	**0,0**	**3,3**	**652,2**
Cash flow changes from financing activities							
Proceeds from loans and borrowings	0,2	15,0	0,0	0,0	8,9	0,0	24,2
Repayment of loans and borrowings	-0,1	0,0	0,0	-3,2	-6,2	0,0	-9,5
Interests and bank charges paid/received	0,0	-5,1	0,0	-1,4	0,1	-32,2	-38,6
Total cash flow changes from financing activities	**0,1**	**10,0**	**0,0**	**-4,6**	**2,9**	**-32,2**	**-23,9**
Other changes non cash flows related							
Currency differences	-8,3	-0,6	0,1	-0,4	0,0	-0,4	-9,6
Amortisation	0,0	0,0	4,2	0,0	0,0	0,0	4,2
New contracts	0,0	0,0	0,0	19,2	0,0	0,0	19,2
Terminated contracts	0,0	0,0	0,0	-0,4	0,0	0,0	-0,4
Interest expense	18,9	5,1	0,0	1,4	-0,1	52,0	77,3
Interest income	0,0	0,0	0,0	0,0	0,0	-18,4	-18,4
Total other changes non cash flows related	**10,6**	**4,5**	**4,3**	**19,9**	**-0,1**	**33,2**	**72,4**
Balance at 31/12/2023	**610,1**	**67,5**	**-6,3**	**22,3**	**2,8**	**4,3**	**700,7**

in millions of euro	Senior Loans	Revolving Facility	Transaction Costs	Leases	Recourse Factoring	Accrued Interests	Total
Balance at 01/01/2022	**584,6**	**56,7**	**-8,2**	**9,9**	**0,0**	**2,5**	**645,5**
Cash flow changes from financing activities							
Proceeds from loans and borrowings	0,0	20,0	0,0	0,0	0,0	0,0	20,0
Repayment of loans and borrowings	-0,1	-27,5	0,0	-3,0	0,0	0,0	-30,6
Interests and bank charges paid/received	0,0	-2,4	-5,9	-0,5	0,0	-32,6	-41,4
Total cash flow changes from financing activities	**-0,1**	**-9,9**	**-5,9**	**-3,5**	**0,0**	**-32,6**	**-52,0**
Other changes non cash flows related							
Currency differences	14,8	3,7	0,0	-0,1	0,0	-0,4	18,0
Amortisation	0,0	0,0	3,5	0,0	0,0	0,0	3,5
New contracts	0,0	0,0	0,0	2,8	0,0	0,0	2,8
Terminated contracts	0,0	0,0	0,0	-2,6	0,0	0,0	-2,6
Interest expense	0,0	2,5	0,0	0,5	0,0	33,9	36,9
Total other changes non cash flows related	**14,8**	**6,2**	**3,5**	**0,6**	**0,0**	**33,5**	**58,6**
Balance at 31/12/2022	**599,3**	**53,0**	**-10,6**	**7,0**	**0,0**	**3,4**	**652,1**

Bank loan covenants

Due to important cash flow needs to finance operating activities in 2023, the threshold of more than 35% of drawings on the Original Revolving Facility Commitment is met as at 31 December 2023. The Group complies with the related covenant on Senior Net Debt ratio to EBITDA.

Security for Liabilities

Some assets, such as shares of the subsidiaries, receivables and bank accounts, are being used as security for loan facilities with BNP Paribas Fortis SA/NV, CitiGroup Global Markets Limited, Credit Suisse AG, London Branch, Deutsche Bank AG, London Branch, HSBC Bank plc, ING Bank N.V. and the Bank of Ireland, depending on the local regulations in respect of pledging assets. The carrying amount of those assets is 59,5 mEUR.

In particular, the bank loans are secured over the following assets by legal entity:

ADB Safegate Luxembourg 2 S.à r.l.

- Luxembourg Law Receivables Pledge
- Luxembourg Law Account Pledge (BGL)
- Luxembourg Law Account Pledge (SG)
- Belgium Law Share Pledge over the shares in ADB Safegate Belgium BV

ADB Safegate Luxembourg 1 S.à r.l.

- Luxembourg Law Receivables Pledge
- Luxembourg Law Account Pledge
- Luxembourg Law Share Pledge over the shares in ADB Safegate Luxembourg 2 S.à r.l.

ADB Safegate Belgium BV

- Luxembourg Law Claim Pledge
- Belgium Law Receivables and Bank Accounts Pledge
- US Pledge Agreement
- Belgian Law Share pledge over the shares in ADB Safegate BV

ADB Safegate BV

- Belgium Law Receivables and Bank Accounts Pledge
- Swedish Law Share Pledge over the shares in ADB Safegate Sweden AB
- Australian Law Share pledge over the shares in ADB Safegate Australia Pty Ltd
- Hong Kong Law share pledge over the shares in ADB Safegate Hong Kong Limited
- German Law share pledge over the shares in ADB Safegate Germany Verwaltungs GmbH
- Finnish Law Pledge of Intragroup Loan Receivables of ADB Safegate BV- Branch Finland
- Finnish Law Pledge of Floating Charge Promissory Note of ADB Safegate BV- Branch Finland
- Hong Kong Law Supplemental Share Pledge over shares in ADB Safegate Hong Kong Limited

ADB Safegate Hong Kong Limited

- Debenture creating fixed and floating charges over ADB Safegate Hong Kong's assets
- Hong Kong law supplemental debenture of ADB Safegate Hong Kong Limited

ADB Safegate Sweden AB

- Account Pledge Agreement
- Swedish Law governed Intercompany Loan Pledge Agreement

ADB Safegate Americas 1, Inc.

- US Pledge and Security Agreement of ADB Safegate Americas 1, Inc.

ADB Safegate Americas LLC

- US Joinder Agreement of ADB Safegate Americas LLC to the US Pledge and Security Agreement of ADB Safegate Americas 1, Inc.
- US Security Joinder Agreement of ADB Safegate Americas LLC to the US Pledge and Security Agreement of ADB Safegate Americas 1 Inc.
- US Security Supplement of ADB Safegate Americas LLC for shares in DBT Transportation Services LLC

DBT Transportation Services LLC

- US Joinder Agreement of DBT Transportation Services LLC to the US Pledge and Security Agreement of ADB Safegate Americas 1, Inc.

ADB Safegate Australia Pty Ltd

- Australian Law General Security Deed granted by ADB Safegate Australia Pty Ltd

ADB Safegate Germany GmbH and ADB Safegate Germany Verwaltungs GmbH

- German Law Share Pledge Agreement granted by ADB Safegate Germany Verwaltungs GmbH over the shares in ADB Safegate Germany
- German Law Account Pledge Agreement
- German Law Assignment Agreement
- German Law Supplemental Share Pledge Agreement granted by ADB Safegate Germany Verwaltungs GmbH over the shares in ADB Safegate Germany GmbH
- German Law Supplemental Account Pledge Agreement
- German Law Supplemental Assignment Agreement

19. Liabilities for post-employment and other long-term employee benefits

The Group contributes to employee retirement benefit plans in accordance with the laws and usual practices of countries in which its subsidiaries operate.

As of 31 December 2023, the present value of the defined benefit obligation (DBO) and the service costs are calculated by a qualified actuary using the Projected Unit Credit (PUC) method.

The amounts recognised in the balance sheet and the movements in the net defined benefit obligation over the year are as follows:

In millions of euro	**31/12/2023**	**31/12/2022**
Amounts recognized in the statement of financial position		
Defined benefit obligation	10,3	9,7
Fair value of plan assets	8,8	8,6
Funded status	**1,6**	**1,1**
Effect of asset ceiling/onerous liability	0,0	0,0
Net defined benefit liability (asset)	**1,6**	**1,1**
Liability for other post-employment benefits	0,1	0,0
Liability for early retirement obligations	0,0	0,0
Total employee benefits	**1,6**	**1,1**

The Group makes contributions to a defined benefit plan that provides pension and medical benefits for a few employees upon retirement. Plan assets comprise equity securities and bonds.

In millions of euro	**31/12/2023**	**31/12/2022**
Change in defined benefit obligation		
1. Defined benefit obligation at end of prior year	9,7	11,0
2. Service cost		
a. Current service cost	0,7	0,9
3. Interest expense	0,3	0,1
4. Cash flows		
a. Benefit payments from plan assets	(0,8)	(0,3)
b. Benefit payments from employer	(0,1)	(0,1)
e. Participant contributions	0,2	0,2
f. Administrative expenses included in the DBO	(0,0)	(0,0)
g. Taxes included in the DBO	(0,1)	(0,1)
h. Insurance premiums for risk benefits	(0,1)	(0,1)
6. Remeasurements		
a. Effect of changes in demographic assumptions	-	-
b. Effect of changes in financial assumptions	0,1	(1,9)
c. Effect of experience adjustments	0,4	(0,1)
7. Effect of changes in foreign exchange rates	-	-
8. Defined benefit obligation at end of year	**10,3**	**9,7**

In millions of euro	31/12/2023	31/12/2022
Change in fair value of plan assets		
1. Fair value of plan assets at end of prior year	8,6	7,8
2. Interest income	0,3	0,1
3. Cash flows		
a. Total employer contributions		
(i) Employer contributions	0,7	0,7
(ii) Employer direct benefit payments	0,1	0,1
b. Participant contributions	0,2	0,2
c. Benefit payments from plan assets	(0,8)	(0,3)
d. Benefit payments from employer	(0,1)	(0,1)
g. Administrative expenses paid from plan assets	(0,0)	(0,0)
h. Taxes paid from plan assets	(0,1)	(0,1)
i. Insurance premiums for risk benefits	(0,1)	(0,1)
5. Remeasurements		
a. Return on plan assets (excluding interest income)	0,0	0,2
7. Fair value of plan assets at end of year	**8,8**	**8,6**

In millions of euro	31/12/2023	31/12/2022
Components of defined benefit cost		
1. Service cost		
a. Current service cost	0,7	0,9
e. Total service cost	**0,7**	**0,9**
2. Net interest cost		
a. Interest expense on DBO	0,3	0,1
b. Interest (income) on plan assets	(0,3)	(0,1)
e. Total net interest cost	**0,0**	**0,0**
5. Defined benefit cost included in P&L	**0,8**	**0,9**
6. Remeasurements (recognized in other comprehensive income)		
a. Effect of changes in demographic assumptions	-	-
b. Effect of changes in financial assumptions	0,1	(1,9)
c. Effect of experience adjustments	0,4	(0,1)
d. (Return) on plan assets (excluding interest income)	(0,0)	(0,2)
g. Total remeasurements included in OCI	**0,5**	**(2,2)**
7. Total defined benefit cost recognized in P&L and OCI	**1,2**	**(1,3)**

In millions of euro	31/12/2023	31/12/2022
Net defined benefit liability (asset) reconciliation		
1. Net defined benefit liability (asset)	1,1	3,2
2. Defined benefit cost included in P&L	0,8	0,9
3. Total remeasurements included in OCI	0,5	(2,2)
4. Cash flows		
a. Employer contributions	(0,7)	(0,7)
b. Employer direct benefit payments	(0,1)	(0,1)
5. Net defined benefit liability (asset) as of end of year	**1,6**	**1,1**

In millions of euro	31/12/2023	31/12/2022
Plan assets		
Fair value of plan assets		
a. Assets held by insurance company	8,8	8,6
d. Total	**8,8**	**8,6**

Assets held by insurance company (8,8 mEUR as of 31 December 2023) are primarily invested in Government and corporate bonds, but also in other asset classes such as equities and real estate.

In millions of euro	31/12/2023
Expected cash flows for following year	
1. Expected employer contributions	0,8
2. Expected contributions to reimbursement rights	-
3. Expected total benefit payments	
Year 1	0,2
Year 2	0,2
Year 3	0,3
Year 4	0,4
Year 5	0,6
Next 5 years	4,0

In millions of euro	31/12/2023	31/12/2022
Sensitivity Analysis		
Present value of defined benefit obligation		
Discount rate - 25 basis points	10,5	9,8
Discount rate + 25 basis points	10,2	9,6
Pensions-in-payment increase rate - 25 basis points	2,0	1,8
Pensions-in-payment increase rate + 25 basis points	2,1	1,9
Weighted average duration of defined benefit obligation (in years)		
Discount rate - 25 basis points	6,3	4,8
Discount rate + 25 basis points	3,8	3,8

Group's principal obligation: Belgian defined contribution plans with return guaranteed by law

Belgian "Defined Contribution" Group insurance plans are subject to the Occupational Pensions Act of April 2003. According to article 24 of this Act, affiliated persons are entitled to a guaranteed minimum return on contributions made by either the organizer of the plan or the employee. Some conditions in this law, such as the required level of minimum return, have been amended by the Act of 18 December 2015. Similar to the measurement of all other defined benefit plans, the net pension liability related to defined contribution plans with return guaranteed by law is calculated as the difference between the present value of the defined benefit obligation (DBO) and the fair value of the plan assets.

The following table shows a breakdown of the net defined benefit obligation (plan assets) by country:

	31/12/2023	31/12/2022
Belgium	56%	60%
Germany	40%	37%
Austria	3%	
France	2%	3%

Actuarial assumptions

The actuarial assumptions used for the main countries are presented below:

	Belgium		Germany	
	31/12/2023	31/12/2022	31/12/2023	31/12/2022
Discount Rate	3,50%	3,50%	3,50%	3,50%
Long-term rate of return on assets	3,50%	3,50%	3,50%	3,50%
Salary Increases	Inflation + 0.75%		Inflation + 0.25%	
Inflation	2,75%		2,00%	
Mortality	MR/FR including age correction minus 4 or 5 years		Heubeck Richttafeln 2018G	
Retirement Age	65		between 60 and 65	

20. Provisions

In millions of euro	Warranties	Claims	Restructuring	Other	Total
01/01/2023	**4,7**	**1,9**	**0,1**	**1,0**	**7,7**
Provisions made during the period	0,9	0,3	0,0	0,1	1,2
Provisions used during the period	-0,4	0,0	-0,1	-0,2	-0,7
Provisions reversed during the period	-0,2	-0,1	0,0	0,0	-0,3
Other movement	0,0	0,7	0,0	0,0	0,7
Foreign Currency Translation	-0,1	0,0	0,0	0,0	-0,1
31/12/2023	**4,9**	**2,8**	**0,0**	**0,8**	**8,5**
Non-Current	0,0	1,2	0,0	0,7	1,9
Current	4,9	1,6	0,0	0,1	6,6

In millions of euro	Warranties	Claims	Restructuring	Other	Total
01/01/2022	**6,0**	**1,8**	**0,4**	**0,7**	**8,9**
Provisions made during the period	0,1	0,4	0,0	0,1	0,6
Provisions used during the period	0,3	-0,2	-0,1	0,1	0,1
Provisions reversed during the period	-1,9	-0,1	-0,1	0,0	-2,1
Other movement	0,0	0,0	0,0	0,0	0,0
Foreign Currency Translation	0,1	0,0	0,0	0,0	0,2
31/12/2022	**4,7**	**1,9**	**0,1**	**1,0**	**7,7**
Non-Current	0,5	1,2	0,0	0,7	2,4
Current	4,2	0,7	0,1	0,3	5,3

Warranties

The provision for warranties relates mainly to contractual warranty obligations. The provision is based on estimates made from historical warranty data associated with similar products and services. The Group expects to incur part of the liability within one year and part of the liability over one year.

Claims

The provision for claims relates mainly to ongoing litigations. The expected timing of outflows for the main open litigation is expected to be within 24 months after the reporting period.

Other

Other provisions relate mainly to employee's related legal provision.

21. Trade and other payables, Contract liabilities

In millions of euro	**31/12/2023**	**31/12/2022**
Trade and other payables		
Trade payables	47,8	45,0
Accruals	24,9	26,2
Deferred income	1,9	1,3
Contract Liabilities - Advance payments received	12,4	13,2
Contract Liabilities - Billings in excess of cost and estimated profits	24,2	27,7
Total	**111,1**	**113,4**

22. Financial instruments

Trade receivables

In millions of euro	31/12/2023	31/12/2022
Exposure to credit risk		
Trade and other receivables	95,4	90,6
Prepayments	-12,4	-13,2
Trade and other receivables (including prepayments)	**83,1**	**77,4**

In millions of euro	31/12/2023	31/12/2022
The maximum exposure to credit risk for trade and other receivables at the reporting date by geographic region was:		
Western Europe	7,4	3,2
Central & Eastern Europe	10,0	5,0
Middle-East & Africa	27,4	25,8
America	19,2	26,0
Asia	10,8	7,7
China	2,1	5,8
Australia & New Zealand	3,5	0,4
Other Regions	2,6	3,5
TOTAL	**83,1**	**77,4**

In millions of euro	31/12/2023	31/12/2022
The ageing of trade and other receivables at the reporting date was:		
Ageing of trade receivables: neither past due nor impaired	40,7	43,2
Ageing of trade receivables: < 30 days	17,4	12,0
Ageing of trade receivables: 30 - 60 days	6,9	4,0
Ageing of trade receivables: 60 - 90 days	3,3	0,4
Ageing of trade receivable: 90 - 120 days	1,6	2,2
Ageing of trade receivable: > 120 days	13,1	15,6
TOTAL	**83,1**	**77,4**

In millions of euro	31/12/2023	31/12/2022
The movement in the allowance for impairment in respect of trade and other receivables during the year was as follows:		
Beginning Balance	**-5,7**	**-5,9**
Impairment loss recognized (net of increase/used/reversals)	1,6	0,4
Foreign currency Translation	0,2	-0,2
Ending Balance	**-3,9**	**-5,7**

Contract assets

In millions of euro	31/12/2023	31/12/2022
Exposure to credit risk		
Contract assets	**95,1**	**86,4**

In millions of euro	31/12/2023	31/12/2022
The maximum exposure to credit risk for contract assets at the reporting date by geographic region was:		
Western Europe	1,6	2,7
Central & Eastern Europe	8,0	10,5
Middle-East & Africa	34,8	47,9
America	2,5	0,0
Asia	17,2	2,8
China	17,5	13,0
Australia & New Zealand	13,6	7,3
Other Regions	0,0	2,3
TOTAL	**95,1**	**86,4**

In millions of euro	31/12/2023	31/12/2022
The ageing of contract assets at the reporting date was:		
Ageing of contract assets: neither past due nor impaired	2,8	4,1
Ageing of contract assets: < 30 days	20,3	9,3
Ageing of contract assets: 30 - 60 days	13,5	4,1
Ageing of contract assets: 60 - 90 days	9,2	9,4
Ageing of contract assets: 90 - 120 days	6,9	-0,7
Ageing of contract assets: > 120 days	42,4	60,3
TOTAL	**95,1**	**86,4**

In millions of euro	31/12/2023	31/12/2022
The movement in the allowance for impairment in respect of contract assets during the year was as follows:		
Beginning Balance	**-1,8**	**-1,7**
Impairment loss recognized (net of increase/used/reversals)	0,1	-0,1
Foreign currency Translation	0,0	-0,1
Ending Balance	**-1,7**	**-1,8**

Management believes that the unimpaired amounts that are past due are still collectible based on historical payment behaviour.

Credit quality of receivables that are not past due or impaired: the Group's exposure to credit risk is influenced mainly by the individual characteristics of each customer. The demographics of the Group's customer base, including the default risk of the industry and country in which customers operate, also has an influence on credit risk. However, the company has a credit policy under which each new customer is analysed individually for creditworthiness before the Group's standard payment and delivery terms and conditions are offered.

Factoring

(i) Non-recourse factoring

The Group has implemented during 2023 an agreement with a factoring company to which it sells its US trade receivables denominated in USD on a non-recourse basis. Under this agreement, the factoring company assumes the credit risk associated with the receivables. Accordingly, these transactions are accounted for as a sale of receivables under IFRS 9 because the contract effectively transfer substantially all of the risks and rewards of ownership of the receivables to the factoring company and continuing involvement is not significant.

As of 31 December 2023, the carrying amount of these receivables transferred amounted to 4,9 mEUR and an amount of 3,7 mEUR (2022: nil) has been received in cash from the factoring company. These receivables are derecognized from 'trade and other receivables' line item in the statement of financial position upon transfer to the factoring company. The difference between the carrying amount of the receivables transferred and the cash received on those receivables factored ('holdback guarantee') remains recognized in trade receivables. Interest incurred are recognized as interest expense and reported within Financial Costs in the statement of profit or loss.

As per the agreement, the Group has no obligation, nor does it voluntarily choose, to repurchase receivables or replenish the disposed receivables. Hence, maximum exposure to credit risk relative to these transactions is considered immaterial as of the end of the reporting period.

(ii) Recourse factoring

The Group also implemented during 2023 a multi-currency factoring contract with a financial institution to which it sells trade receivables on a recourse basis, mainly of the Belgian based operating entity. As stipulated in the contract, the risk of credit loss remains with the Company. Therefore, these transactions do not substantially transfer the risks and rewards of these receivables and are accounted for as secured borrowing.

As of 31 December 2023, the nominal value of the receivables sold to the factoring company on a recourse basis amounted to 2,8 mEUR (2022: nil). These receivables are not derecognized and continue to be recognized in 'trade and other receivables' line item in the statement of financial position. Liabilities to the factoring company related to the recourse factoring amounted to 2,8 mEUR and are recognized in 'Short-term debt'.

As per the agreement, loss of receivable due to the credit risk needs to be reimbursed to the factoring company, the maximum exposure to credit risk at the end of the period related to these transactions amounts to 2,8 mEUR (2022: nil).

Cash and cash equivalents

As described in note 16, the Group held cash and cash equivalents of 30,1 mEUR as at 31 December 2023 (34,2 mEUR as at 31 December 2022). The cash and cash equivalents are held with financial institutions with at least an "A" credit rating attributed by Standard & Poor's, except for Standard Bank in South Africa for an amount of 0,4mEUR as of 31 December 2023 (0,4 mEUR as of 31 December 2022), which has a B rating.

While cash and cash equivalents are also subject to the impairment requirements of IFRS 9, the identified impairment loss was immaterial.

Liquidity risk

The following are the contractual maturities of financial liabilities, including estimated interest payments and the impact of derivatives:

31/12/2023

In millions of euro	Carrying amount	Contractual cash flows	≤ 6 Months	6 - 12 Months	1 - 2 Years	2 - 5 Years	> 5 Years
Bank loans and other facilities	678,6	919,5	25,3	25,1	50,0	819,3	0,0
Lease liabilities	22,3	22,3	1,4	1,4	2,2	4,1	13,1
Trade and other payables	72,7	72,7	72,7				
Contract liabilities	36,6	36,6	36,6				

31/12/2022

In millions of euro	Carrying amount	Contractual cash flows	≤ 6 Months	6 - 12 Months	1 - 2 Years	2 - 5 Years	> 5 Years
Bank loans and other facilities	645,2	876,6	16,4	26,8	57,1	776,2	0,0
Lease liabilities	7,0	7,0	1,5	1,5	1,7	2,2	0,1
Trade and other payables	71,2	71,2	71,2				
Contract liabilities	40,9	40,9	40,9				

As disclosed in note 18, the Group's secured bank loans contain loan covenants. A future breach of covenants may require the Group to repay the loan earlier than indicated in the above table.

Currency risk

Exposure to currency risk

The Group's exposure to foreign currency risk was as follows on 31 December 2023 (based on notional amounts):

In millions of euro	Emirati Dirham	Australian Dollar	Euro	British Pound	Qatari Riyal	Chinese Renminbi	Swedish Krona	Taiwan New Dollar	United States Dollar	South African Rand	Other	Total
Cash & cash equivalents	6,0	-0,5	-0,2	6,8	0,9	3,6	-1,9	0,8	8,6	0,3	5,9	30,1
Trade receivables (+)	1,2	3,3	39,1	1,5	6,8	3,0	0,4	0,8	23,6	0,3	11,5	91,5
Bank Loans and revolving facility	0,0	0,5	395,4	0,0	0,0	0,0	0,0	0,0	282,7	0,0	0,0	678,6
Trade payables (-)	-0,5	-3,2	-21,0	-0,5	0,0	-0,8	-0,4	0,0	-20,8	0,0	-0,5	-47,8
Leases	-0,7	-0,4	-2,5	-0,3	-0,1	-0,4	-1,2	0,0	-16,2	-0,1	-0,3	-22,3
Total	**5,9**	**-0,3**	**410,8**	**7,5**	**7,6**	**5,4**	**-3,1**	**1,5**	**277,9**	**0,4**	**16,6**	**730,2**

The Group's exposure to foreign currency risk was as follows on 31 December 2022 (based on notional amounts):

In millions of euro	Emirati Dirham	Australian Dollar	Euro	British Pound	Qatari Riyal	Chinese Renminbi	Swedish Krona	Taiwan New Dollar	United States Dollar	South African Rand	Other	Total
Cash & cash equivalents	2,8	1,1	0,9	6,2	13,0	3,2	-2,5	2,0	-2,3	0,4	9,5	34,2
Trade receivables (+)	1,2	1,3	25,2	2,5	7,7	6,3	0,2	0,4	28,5	0,1	11,5	84,9
Bank Loans and revolving facility	0,0	0,0	375,3	0,0	0,0	0,0	0,0	0,0	269,9	0,0	0,0	645,2
Trade payables (-)	-1,0	-0,5	-25,1	-0,6	-0,1	-1,5	-1,1	-0,2	-14,1	0,0	-0,9	-45,0
Leases	-0,9	-0,4	-2,4	-0,5	-0,1	-0,6	-0,6	0,0	-1,1	0,0	-0,3	-7,0
Total	**2,1**	**1,6**	**373,9**	**7,6**	**20,5**	**7,4**	**-4,0**	**2,2**	**281,0**	**0,5**	**19,8**	**712,4**

The "Other" column includes currency risks on a variety of currencies that are individually not significant to the Group.

The following exchange rates were applied during the current period (2023) for currencies relevant for the Group, dominated in a 'EURO pricing' format (for ex, 1 AED = 0,2544 EUR closing rate):

ISO	Closing Rate	Average
AED	0,2467	0,2518
AUD	0,6172	0,6145
BRL	0,1867	0,1853
CAD	0,6839	0,6854
CHF	1,0765	1,0295
CLP	0,0010	0,0011
CNY	0,1276	0,1307
DKK	0,1341	0,1342
EUR	1,0000	1,0000
GBP	1,1531	1,1499
HKD	0,1160	0,1181
INR	0,0109	0,0112
MYR	0,1972	0,2030
QAR	0,2487	0,2535
RMB	0,1276	0,1307
RUB	0,0102	0,0110
SEK	0,0900	0,0872
SGD	0,6866	0,6887
TRY	0,0307	0,0401
TWD	0,0295	0,0297
USD	0,9061	0,9247
ZAR	0,0496	0,0502

Sensitivity analysis

A 10 percent strengthening (weakening) of the Euro against the following currencies on 31 December 2023 would have increased (decreased) equity and net profit by the amounts shown below. This analysis assumes that all other variables, in particular interest rates, remain constant.

	Strengthening of EUR		Weakening of EUR	
In millions of euro	Equity	P&L	Equity	P&L
AED	1,7	-0,3	-1,7	0,3
AUD	1,3	-0,1	-1,3	0,1
GBP	-0,4	0,4	0,4	-0,4
RMB	2,4	-0,1	-2,4	0,1
SEK	4,0	0,5	-4,0	-0,5
USD	8,5	0,9	-8,5	-0,9

This analysis does not take into account the effect of revaluation of loans and borrowings in foreign currencies at closing rates. For intra-group loans, any effect in profit and loss shall be compensated in equity by a movement in translation reserve.

Interest rate risk

Profile

At the reporting date the interest rate profile of the Group's interest-bearing financial instruments was:

In millions of euro	Carrying Amount 31/12/2023	Carrying Amount 31/12/2022
Fixed Rate Instruments		
Financial Liabilites		
(ADB Safegate Germany GmbH & ADB Safegate Austria)	0,5	0,4
Variable Rate Instruments		
Financial Liabilities (Senior Loans)	607,1	592,4
Revolving Facility	67,5	52,9

Fair value sensitivity analysis for fixed rate instruments

The Group does not account for any fixed rate financial assets and liabilities at fair value through profit or loss, and the Group does not designate derivatives as hedging instruments under a fair value hedge accounting model. Therefore, a change in interest rates at the reporting date would not affect profit or loss.

Fair value sensitivity analysis for variable rate instruments

The Group has designated derivatives (interest rate cap contracts) as hedge instruments under cash flow hedge accounting model.

Fair values

Fair values versus carrying amounts

The fair values of financial assets and liabilities, together with the carrying amounts shown in the consolidated statement of financial position, are as follows:

31 December 2023

In millions of euro	Carrying Amount	Fair Value
Interest Rate Cap Contract Assets	2,3	2,3
Financial assets measured at fair value	**2,3**	**2,3**
Receivables and Contract Assets	185,1	185,1
Cash and cash equivalents	30,1	30,1
Financial assets not measured at fair value	**215,2**	**215,2**
Financial liabilities measured at fair value	**0,0**	**0,0**
Bank loans	608,2	614,5
Revolving facilities	67,6	67,6
Recourse factoring	2,8	2,8
Lease liabilities	22,3	22,3
Trade and other payables	74,6	74,6
Contract Labilities	36,6	36,6
Financial liabilities not measured at fair value	**812,0**	**818,3**

31 December 2022

In millions of euro	Carrying Amount	Fair Value
Interest Rate Cap Contract Assets	10,5	10,5
Financial assets measured at fair value	**10,5**	**10,5**
Receivables and Contract Assets	169,9	169,9
Cash and cash equivalents	34,2	34,2
Financial assets not measured at fair value	**204,1**	**204,1**
Interest rate swap Liabilities	0,0	0,0
Financial liabilities measured at fair value	**0,0**	**0,0**
Bank loans	592,8	599,5
Revolving facilities	52,9	52,9
Lease liabilities	7,0	7,0
Trade and other payables	71,2	71,2
Contract Labilities	40,9	40,9
Financial liabilities not measured at fair value	**764,8**	**771,5**

All these fair values are level 2 fair values (see note 5).

23. Leases

Group as a lessee

Information about leases for which the Group is a lessee is presented below.

1. Amounts recognised in the balance sheet

Right of use asset

In millions of euro	Land and building	Vehicles	IT	Total
Cost				
01/01/2023	**10,0**	**3,9**	**0,3**	**14,2**
Additions	17,5	1,5	0,0	19,0
Derecognition	-2,9	-0,9	0,0	-3,8
Effect of movements in exchange rates	-0,5	0,0	0,0	-0,5
31/12/2023	**24,1**	**4,5**	**0,3**	**28,9**
Depreciation and impairment losses				
01/01/2023	**5,4**	**2,2**	**0,2**	**7,8**
Depreciation for the period	2,9	1,1	0,1	4,0
Derecognition	-2,8	-0,9	0,0	-3,7
Effect of movements in exchange rates	-0,1	0,0	0,0	-0,2
31/12/2023	**5,3**	**2,3**	**0,2**	**7,9**
Carrying amounts				
01/01/2023	**4,6**	**1,7**	**0,1**	**6,4**
31/12/2023	**18,8**	**2,1**	**0,1**	**20,9**

In millions of euro	Land and building	Vehicles	IT	Total
Cost				
01/01/2022	**11,5**	**3,4**	**0,3**	**15,2**
Additions	1,6	1,1	0,0	2,7
Derecognition	-2,8	-0,6	0,0	-3,5
Effect of movements in exchange rates	-0,3	0,0	0,0	-0,2
31/12/2022	**10,0**	**3,9**	**0,3**	**14,2**
Depreciation and impairment losses				
01/01/2022	**3,8**	**1,8**	**0,2**	**5,8**
Depreciation for the period	2,0	1,0	0,1	3,1
Derecognition	-0,2	-0,7	0,0	-0,9
Effect of movements in exchange rates	-0,2	0,0	0,0	-0,2
31/12/2022	**5,4**	**2,2**	**0,2**	**7,8**
Carrying amounts				
01/01/2022	**7,7**	**1,6**	**0,2**	**9,4**
31/12/2022	**4,6**	**1,7**	**0,1**	**6,4**

Right of use assets are presented as part of Property, plant and equipment on the statement of financial position. The amount of leases expenses related to variable leases, short-term leases and low-value leases are included mainly within General Administration expenses in the income statement (refer to Note 8).

Lease liability

In millions of euro	31/12/2023	31/12/2022
Beginning Balance	**7,0**	**9,9**
New contracts	19,2	2,8
Repayments	-3,2	-3,0
Terminated contracts	-0,4	-2,6
Effect of movements in exchange rates	-0,4	-0,1
Ending Balance	**22,3**	**7,0**
Of which		
Current lease liability	**2,8**	**2,9**
Non-current lease liability	**19,4**	**4,0**

2. Amounts recognized in the statement of profit or loss

In millions of euro	31/12/2023	31/12/2022
Depreciation charge of right-of-use assets		
Land and building	**2,9**	**2,0**
Vehicles	**1,1**	**1,0**
IT	**0,1**	**0,1**
Total depreciation charge RoU	**4,0**	**3,1**
Interest expense (included in finance costs)	**1,4**	**0,5**
Expense relating to short-term leases and low value assets	**2,3**	**2,0**

3. Amounts recognized in the statement of cash flows

In millions of euro	31/12/2023	31/12/2022
Cash outflows		
Reimbursement of the principal of the lease liabilities	**3,2**	**3,0**
Interests on lease liabilities	**1,4**	**0,5**

4. Maturity analysis of the lease liability

In millions of euro	31/12/2023
Due in 2024	2,8
Due in 2025	2,2
Due in 2026	1,7
Due in 2027 or later	15,5

24. Capital commitments

The Group has capital commitments as at 31 December 2023 related to blanket purchase orders and discrete purchase orders to some suppliers in order to receive better conditions. The total amount of such commitments to suppliers for the coming years resulting from such blanket and discreet orders is 194,6 mEUR (163,9 mEUR as at 31 December 2022).

Moreover, the Group has open bonds for a total amount of 60,2 mEUR as at 31 December 2023 (62,7 mEUR as at 31 December 2022) mainly for performance bonds and advance payment bonds.

25. Contingencies

The Belgian tax authorities are performing with respect to income year 2016, 2017 and 2018 a transfer pricing audit of both ADB Safegate Belgium BV and of ADB Safegate BV. These tax audits are still in the request for information phase.

On 31 December 2023, the Group has commitments of 0,9 mEUR relating to termination benefits and exit packages of key management personnel in case of breach of contract.

26. Related parties

Parent and ultimate controlling party
The ultimate controlling parties of the company is the Carlyle Group, established under the laws of United States of America acting through its management company CEP IV Participations S.à r.l., SICAR (*Luxembourg*) and CEP IV Investment 2017 S.à r.l. (*Luxembourg*).

CEP IV Participations S.à r.l., SICAR (Luxembourg) and CEP IV Investment 2017 S.à r.l. (Luxembourg) are the majority shareholders of ADB Safegate Luxembourg 1 S.à r.l. (Luxembourg).

Other shareholders of ADB Safegate Luxembourg 1 S.à r.l. are mainly key managers of the Group.

Key management personnel compensation
Key management personnel compensation comprised:

in millions of euro	**For the year ended 31/12/2023**	**For the year ended 31/12/2022**
Short-term employee benefits	2,4	2,3
Termination benefits	0,0	0,2
Total	**2,4**	**2,5**

The amounts disclosed in the table are the amounts recognised as an expense during the reporting period related to key management personnel.
Key management personnel is made up of four Group's executives as at 31 December 2023 (2022: 4).

Transactions with non-controlling shareholders
There are no significant transactions with non-controlling shareholders.
There are no advances or loans granted to the members of the administrative or managerial body of the parent company by the parent company or by its subsidiary undertakings.
Additionally, there are no commitments or guarantees of any kind, entered into on their behalf.

27. Group entities

The following entities are fully consolidated:

Name	Country of incorporation	% Equity interest 31/12/2023	31/12/2022
ADB Safegate Australia Pty Ltd	Australia	100	100
ADB Safegate Austria GmbH	Austria	100	100
ADB Safegate BV	Belgium	100	100
ADB Safegate Belgium BV	Belgium	100	100
Safegate do Brazil Ltda	Brazil	100	100
ADB Airf. Sol. Canada Ltd	Canada	100	100
ADB Safegate Canada Inc	Canada	100	100
ADB Airfield Technologies Ltd - Beijing	China	100	100
ADB Safegate Tianjin Ltd	China	100	100
ADB Safegate (Beijing) Airport Software Systems Technologies Ltd	China	100	100
ADB Safegate (Beijing) Airfield Technology Ltd	China	100	100
ADB Safegate (Cyprus) LTD	Cyprus	100	100
ADB Safegate Denmark Asp	Denmark	100	100
ADB Safegate Airport Systems France SAS	France	100	100
ADB Safegate Germany Verwaltungs GmbH	Germany	100	100
ADB Safegate Germany GmbH	Germany	100	100
ADB Safegate Hellas ΕΠΕ	Greece	100	100
ADB Safegate Hong Kong Ltd	Hong Kong	100	100
ADBSafegate India Private Ltd	India	100	100
ADB Safegate Luxembourg 1 S.à.r.l.	Luxembourg	100	100
ADB Safegate Luxembourg 2 S.à.r.l.	Luxembourg	100	100
Combinatie Swarco ADB SG *	The Netherlands	50	50
ADB Safegate New Zealand Limited	New Zealand	100	100
ADB Safegate Doha WLL	Qatar	48	48
ADB Safegate Russia LLC	Russian Federation	100	100
ADB Safegate Saudi Limited Company	Saudi Arabia	100	100
ADB Safegate Singapore Pte Ltd	Singapore	100	100
ADB Safegate South Africa Pty Ltd	South Africa	100	100
ADB Safegate Airport Systems South Africa Ltd	South Africa	100	100
ADB Safegate Sweden AB	Sweden	100	100
ADB Safegate Gulf LLC	United Arab Emirates	100	100
ADB Safegate Airport Systems Ltd	United Kingdom	100	100
ADB Safegate Americas LLC	United States of America	100	100
ADB Safegate Americas 1 Inc	United States of America	100	100
ADB Safegate Airport Systems Americas Inc	United States of America	100	100
DBT Transportation Services LLC	United States of America	100	100
All Weather , Inc. (a Delaware company)	United States of America	100	100

*Previously known as Dynniq Nederland B.V.

The Group has equity interests in ADB Safegate Doha WLL (48%). The other shareholders are local sponsors with whom the Group has agreed that the other shareholders have no rights to variable returns from the entities, and no ability to use their powers to affect the amount of these returns. The entity is therefore fully consolidated in the consolidated financial statements of the Group.

The Group also has a 50% equity interest in Combinatie Swarco, a Dutch joint venture. The joint venture is consolidated under the equity method in the consolidated financial statements of the Group.

28. Auditor fees

Fees billed to the Company (and its subsidiaries) by Deloitte Audit s.a.r.l. and other member firms of the Deloitte network during the period are as follows:

Excluding VAT

Audit 2023:	0,8 mEUR
Audit 2022:	0,7 mEUR

Such fees are presented under "General administration expenses" in the Consolidated statement of profit or loss and other comprehensive income.

29. Subsequent events

In January 2024, the Board of Directors modified the conditions of the Long-Term Incentive Plan granted to Senior Leaders and some employees. As a result of this change, a probable obligation for the Group is created, which is expected to lead to the recognition of a provision in 2024 as well as potentially beyond 2024. This provision should be regarded as a non-adjusting event at the period-end since the obligation was not likely before the amendment to the plan.

On 12 February 2024, the Company changed its registered office from 12, rue Jean Engling, L-1466 Luxembourg to 14-16 Avenue Pasteur, L-2310 Luxembourg.

CONTRACT DOCUMENTS AND SPECIFICATIONS FOR AUTOMATED WEATHER OBSERVING SYSTEM (AWOS)

For Rusty Allen Airport
Lago Vista, Texas
Project No.: 26AWLAGOV

TABLE OF CONTENTS
Rusty Allen Airport
TxDOT CSJ 26AWLAGOV

1. **NOTICE TO BIDDERS**
2. **BIDDER QUALIFICATIONS**
3. **INSTRUCTIONS TO BIDDERS**
4. **BID**
5. **TECHNICAL SPECIFICATIONS**
6. **WAGE RATES**
7. **AIRPORT LAYOUT PLAN AND PROPERTY MAP**
8. **SAMPLE CONTRACT**
9. **GENERAL CONSTRUCTION CONTRACT PROVISIONS, VOLUME DATED FEBRUARY 2013 (Aviation General Construction Provisions (txdot.gov); USE LATEST VERSION OF REFERENCED ADVISORY CIRCULARS.)**

NOTICE TO BIDDERS
Rusty Allen Airport
Automated Weather Observation System

Sealed bids for the siting, licensing, installation and annual maintenance including National Airspace Data Interchange Network (NADIN) connection of Automated Weather Observation System III with Present Weather Sensor and Thunder Strike Alert (AWOS III PT) need to be addressed and delivered to Attention: Eric De La Cruz City of Lago Vista 5803 Thunderbird St. Lago Vista, TX 78645. Bids will be accepted until 3:00 P.M. CST on Tuesday April 21, 2026 then publicly opened and read aloud in in the Council Chambers at Lago Vista City Hall, 5803 Thunderbird, Lago Vista, TX 78645. Any bid received after closing will be returned unopened.

In general, the Aviation Construction work consists of: Replace and install of an Automated Weather Observation System III with Present Weather Sensor, Thunder Strike Alert (AWOS III PT) to replace in the existing location. The system shall be installed in accordance with this specification and as approved in Federal Aviation Administration Advisory Circular 150/5220-16, latest version, and FAA Order 6560-20B, or latest version.

Bidding documents may be examined on the city's website at www.lagovistatexas.gov/Bids.aspx or https://www.bidnetdirect.com/texas/lagovista.

Technical questions concerning the specifications should be directed via email to Eric De La Cruz (eric.delacruz@lagovistatexas.gov) at least 10 days prior to the bid opening should the owner require technical assistance to respond.

Minimum wage rates have been predetermined as required by law and are set forth in the specifications.

Cashier's check, money order, or teller's check drawn by or on a state or national bank, a savings and loan association, or a state or federally chartered credit union (collectively referred to as "bank") in the amount of two percent (2%) of the total bid price stated in the bid, made payable without recourse to the Owner or a bid bond in the same amount from a reliable corporate surety authorized to do business in the State of Texas and acceptable to the Owner, must accompany each bid as a guarantee that the bidder, if successful, will enter into a contract, and make bond in accordance with the requirements of the specifications. The Owner reserves the right to retain any check, bank money order or bank draft as liquidated damages in the event the bidder withdraws its bid after the bids are opened and before official rejection of the bid by the Owner, or, if successful in securing the award of the contract, the successful bidder fails to enter into the contract and fails to furnish satisfactory performance and payment bonds.

The successful bidder will be required to furnish a Performance Bond and Payment Bond, each in the full amount of the contract price, executed by a surety company or surety companies authorized to execute surety bonds under and in accordance with the laws of the State of Texas.

The proposed contract is subject to the Vernon Texas Civil Statues, Article 601.b now codified as the State Purchasing and General Services Act, Texas Government Code, Chapter 2151 et seq. concerning the participation of Historically Underutilized Business. HUB goal is set at 0%.

The Owner reserves the right to reject any irregular bid and the right to waive technicalities if such waiver is in the best interest of the Owner and conforms to State and local laws and ordinances pertaining to the letting of construction contracts.

The Owner hereby notifies all bidders that it will affirmatively assure that minority enterprises are afforded full opportunity to submit bids in response to this invitation and will not be discriminated against on grounds of race, color, or national origin in consideration for an award.

BIDDER QUALIFICATIONS

I. QUALIFICATIONS

A. Each Bidder shall furnish the Owner satisfactory evidence of the Bidder's competency to perform the proposed work. Such evidence of competency shall consist of statements covering the Bidder's past experience on similar work, a list of projects currently in process and the percent of completion, a list of equipment that would be available for the work, and a list of key personnel that would be available.

B. In addition, each Bidder shall furnish the Owner satisfactory evidence of the Bidder's financial responsibility. Such evidence shall consist of a classified balance sheet, which has been compiled and signed by an independent certified public accountant, reflecting current assets in excess of current liabilities (positive net working capital) as of the last calendar year or the Bidder's last fiscal year. At the time of submitting such financial statements or reports, the Bidder shall further certify whether the Bidder's financial responsibility is approximately the same as stated or reported by the public accountant. If the Bidder's financial responsibility has changed, the Bidder shall qualify the public accountant's statement or report to reflect the Bidder's true financial condition at the time such qualified statement or report is submitted to the Owner.

C. The Bidder shall provide a listing of both automobile and personal liability insurance coverage currently in force, along with a copy of a Certificate of Insurance as verification of that coverage.

II. SUBMISSION OF QUALIFICATIONS

A. Each bidder shall submit the Bidder's "evidence of competency", "evidence of financial responsibility", and “evidence of insurance coverage” for "worker’s compensation, commercial general liability and Texas business automobile" to the Owner at the date, time and location specified for opening bids. These items shall be submitted in the envelope with your bid marked with project number, location of airport, and name and business address of the bidder.

B. Bids that do not include the qualification requirements listed above will be considered non-responsive and therefore disqualified.

C. BIDS SUBMITTED WITHOUT SUBMISSION OF <u>ALL</u> QUALIFICATIONS WILL NOT BE READ.

INSTRUCTIONS TO BIDDERS

IB-1. **The Owner requires that Bidder shall reference the Aviation Division General Construction Contract Provisions, volume dated February 2013, for all general contract provisions**. General Construction Contract Provisions may be obtained at TxDOT, Aviation Division, 6230 East Stassney Lane, Austin, Texas 78744; Use latest version of referenced Advisory Circulars.

IB-2. The Bidder shall refer to: BIDDER QUALIFICATIONS section of the bid document.

IB-3. The Bidder shall submit the completed bid either on the form furnished by The Owner or by submitting an electronically printed version. All blank spaces in the bid form must be correctly filled in where indicated for each and every item for which a quantity is given. The Bidder shall state the price (written in ink) **BOTH** in words and numerals for each pay item furnished in the bid. In case of conflict between words and numerals, the words, unless obviously incorrect, shall govern.

The Bidder may also submit an electronically **printed** bid. The bid must have pay items in the same order and with the exact information as found on the Owner's bid form. The Bidder is responsible for incorrect information and will be considered non-responsive if pay items are changed in wording or order on the electronically printed form. Electronically printed bids are not required to have the unit prices written in words. Electronically printed bid may not be submitted electronically.

The Bidder shall sign the bid in ink. If the bid is made by an individual, the individual's name and address must be shown. If made by a partnership, the name and address of each member of the partnership must be shown. If made by a corporation, the person signing the bid shall give the name of the state under the laws of which the corporation was chartered and the name, titles, and business address of the president, secretary, and the treasurer.

IB-4. The Bidder shall submit completed copies of all items identified under "Bidder Qualifications". ***Bids received without Bidder Qualifications will not be read.***

IB-5. Receipt of all addenda issued shall be acknowledged by the Bidder in the space provided on the bid form.

IB-6. Bids may be rejected if they show any alteration of words or figures, additions not called for, conditional or uncalled for alternate bids, incomplete bids, any alteration of words or figures or erasures not initialed by the person or persons signing the bid, or irregularities of any kind.

IB-7. The bid shall be accompanied by a Bid Guarantee of the character and in the amount as indicated in the bid.

IB-8. Any questions arising during the advertising period as to meaning or intent of the specifications will be answered by an addendum prepared by the Owner. Contractor will be

responsible for obtaining addenda at our website: www.lagovistatexas.gov/Bids.aspx or https://www.bidnetdirect.com/texas/lagovista. All addenda issued shall become a part of the contract documents.

Bidders are responsible for checking this website regularly for any changes to the bid documents, such as Addendums.

IB-9. Each bid submitted shall be placed in a sealed envelope plainly marked with the project number, location of airport, and name and business address of the Bidder on the outside. When sent by mail, preferably registered, the sealed bid, marked as indicated above, should be enclosed in an additional envelope. Bids, which are transmitted by telephone, by telegraph or by electronic means, will not be accepted.

IB-10. No bid will be considered unless received at the place specified in the advertisement before the time specified for opening all bids. Bids received after the bid opening time shall be returned to the Bidder unopened.

IB-11. Bids will be opened and read publicly at the time and place indicated in the Notice to Bidders.

IB-12. Generally, materials incorporated into a project, such as concrete, rebar, asphalt, etc., are tax exempt. Other items not incorporated into the project such as barricades and equipment rental may be subject to sales tax. A copy of the Texas Sales and Use Tax Exemption form is available through the State Comptroller website at http://www.window.state.tx.us/taxinfo/taxforms/01-339.pdf. This form is a self-certification process. The contractor must complete the form and retain the document in their files. A copy of the form should be sent to the seller/supplier. Bidders should contact their tax consultant or the Texas Office of the Comptroller with any questions related to the payment of sales tax.

BID
26AWLAGOV

Project Description: Siting, licensing and installation of Automated Weather Observation Systems III with Present Weather Sensor and Thunderstrike Alert.

Bid by: Name of Bidder: _____
Address: _____
Telephone: _____Fax: _____
E-mail Address: _____

Pursuant to the foregoing Instruction to Bidders, the undersigned bidder having examined the plans and specifications with related documents and the site of the proposed work, and being familiar with all the conditions surrounding the construction of the project hereby proposes to furnish all necessary superintendence, labor, machinery, equipment, tools, materials and supplies to complete all the work upon which is bid in accordance with the contract documents, within the time set forth and at the prices stated below:

Base Bid: Replace in Existing Location					
Item	**Qty**	**Unit**	**Description** **Written & Numeric <u>Unit Price</u>**	**Unit Price**	**Total Price**
1	1	LS	Remove existing equipment and replace in current location, AWOS III including present weather sensor, with a self-supporting tower installed complete in place according to specification. _____ dollars _____ cents	$_____	$_____
2	1	LS	NADIN/WMSCR Interface Equipment with one year of NADIN connection service. _____ dollars _____ cents	$_____	$_____
3	1	LS	One year of AWOS maintenance that meets the requirements of FAA AC No. 150/5220-16 (latest revision) _____ dollars _____ cents	$_____	$_____

Total Base Bid $_____

Alternate Base Bid: Replace and Relocate					
Item	**Qty**	**Unit**	**Description** **Written & Numeric <u>Unit Price</u>**	**Unit Price**	**Total Price**
1	1	LS	Remove existing equipment and relocate and install AWOS III including present weather sensor with self-supporting tower installed complete in place including site selection, site approval by TxDOT and FAA, and acquisition of FCC licensing, according to specification. Bidders shall account for all necessary expenses and effort related to site preparation to obtain a commissioned AWOS. _____ dollars _____ cents	$_____	$_____
2	1	LS	NADIN/WMSCR Interface Equipment with one year of NADIN connection service. _____ dollars _____ cents	$_____	$_____
3	1	LS	One year of AWOS maintenance that meets the requirements of FAA AC No. 150/5220-16 (latest revision) _____ dollars _____ cents	$_____	$_____

Total Alternate Base Bid $_____

Additive Alternate Bid 1-2 **Items below should be bid with the option to award depending on the availability of funds**					
Item	**Qty**	**Unit**	**Description** **Written & Numeric <u>Unit Price</u>**	**Unit Price**	**Total Price**
A1	1	EA	Thunder Strike Alert _____ dollars _____ cents	$_____	$_____
A2	1	EA	Upgrade to Ultra Sonic Wind Sensor _____ dollars _____ cents	$_____	$_____

Total Bid $_____

It is understood the quantities of work to be done at unit prices are approximate and are intended for bidding purposes only. Amounts are to be shown in both words and numbers. In case of discrepancy the unit price amount shown in words shall govern. Bidders shall bid on the Base Bid, **<u>Alternate Base Bid,</u>** and Additive Alternate 1. Bidders may bid on Alternate Number 2.

The Owner reserves the right to award to the lowest responsible bidder for any combination of the base bid and alternates. Funding availability will be considered in selecting the bid award.

Bidder hereby agrees to commence work under this contract on or before a date to be specified in a written "Notice to Proceed" for installation of the equipment. Following issuance of the written "Notice to Proceed" for installation, installation shall be completed within 90 calendar days thereafter (does not include TxDOT, FCC and FAA review time). Bidder further agrees to pay as liquidated damages the sum of $<u>200.00</u> for each consecutive calendar day to complete the work beyond the allotted time or as extended by an approved change Order.

Bidder understands the Owner reserves the right to reject any irregular bid and the right to waive technicalities if such waiver is in the best interest of the Owner and conforms to State and local laws and ordinances pertaining to the letting of construction contracts. The bidder agrees this bid shall be good and may not be withdrawn for a period of 60 calendar days after the scheduled closing time for receiving bids.

Upon receipt of the written "Notice of Award", the bidder will execute the formal contract agreement within 14 days and deliver a surety bond or bonds as required under the contract documents. The bid security attached in the sum of 2% of the total bid price is to become the property of the Owner in the event the contract is not executed as set forth in the contract documents as liquidated damages for the delay and additional expense caused thereby.

By submission of a bid under this solicitation, bidder certifies the only persons or parties interested in this bid are those named, and the bidder has not directly or indirectly participated in collusion, entered into an agreement or otherwise taken any action in restraint of free competitive bidding in connection with the project.

_____	_____
Signature	Title
_____	_____
Printed Name	Phone
_____	_____
Mailing Address	City, State, Zip Code

Addendum:

The undersigned Bidder certifies that he has acknowledged the addendum(s) to the contract as indicated below.

Addendum No.: _____ dated: _____

Addendum No.: _____ dated: _____

Addendum No.: _____ dated: _____

Qualification Acknowledgment:

The undersigned Bidder has enclosed the bidder's qualifications per General Provision 20-02, Prequalification of Bidders.

_____ I have enclosed qualification statements.

Qualification Acknowledgment Signature:

_____	_____
Signature	Title
_____	_____
Mailing Address	City, State, Zip Code

AWOS Technical Specifications

1. Project Description:

1.1. The project shall consist of replacing an existing Automated Weather Observing System with an Automated Weather Observing System III with Present Weather Sensor and Thunder Strike Alert components (AWOS III P/T) at the Rusty Allen Airport. The system shall be installed in accordance with Federal Aviation Administration Advisory Circular 150/5220-16, (latest revision), "Automated Weather Observing Systems (AWOS) for Non-federal Applications" and as indicated in this specification.

The system as installed will include all labor, equipment, materials, peripherals, training, services, one year warranty, one year of AWOS System Maintenance, and incidentals as necessary to place the system in operation to the satisfaction of the Owner/State and be ready for commissioning by the Federal Aviation Administration (FAA). Vendor shall have FAA certification for the AWOS III P/T at time of bid submittal and will provide copies of such approval with their bid submittal.

1.2 The Vendor shall ascertain that all AWOS and VHF system components installed in the system are compatible in all respects with each other and the remainder of any existing system. Any non-compatible components shall be replaced with compatible components at no additional cost to the owner.

1.3 The Vendor shall utilize an established and proven equipment configuration.

1.4 Not applicable

1.5 Vendor will prepare the Memorandum of Agreement (MOA) and Operations and Maintenance Manual (OMM) as required by FAA Order 6700.20 for owner signature before scheduling FAA commissioning ground inspection and any other checks required before the AWOS can be authorized to operate.

1.6 The following documents shall be considered a part of these provisions:

- AC 150/5220-16, (latest revision) "Automated Weather Observing Systems for Non-Federal Applications"
- FAA Order 6560.20, (latest revision) "Siting for Automated Weather Observing Systems"
- AC 70/7460-1, (latest revision) "Obstruction Marking and Lighting"
- TxDOT Aviation Division General Construction Contract Provisions, Volume dated February 2013.

2. Site Location, if AWOS is relocated:

2.1. The Vendor shall comply with FAA Order 6560.20, (latest revision) "Siting for Automated Weather Observation."

2.2. Vendor shall consider location of available electrical power to reduce sponsor's cost for installation of power at the site when selecting the AWOS site.

2.3. The Vendor must submit locations to Owner/State for approval on furnished copy of Airport Layout Plans marked with latitude/longitude and elevation before submitting FAA Form 7460-1. Owner/State shall approve final site selection.

2.4 Site approval and documents/applications for the AWOS installation and VHF equipment will be submitted to the FAA and the FCC by the Vendor. If a UHF data link is used in place of the data/control cable connection to the AWOS processor, licensing of the UHF frequency is the responsibility of the Vendor.

2.5 The Vendor must notify Owner/State of telephone and electrical connection requirements for the selected AWOS site. Vendor shall coordinate location and requirements with owner so that necessary utility connections can be installed in sufficient time for the installation of the equipment.

2.6 Site selection shall be made, and proper forms executed and filed with FAA within 90 days from notice to proceed for site selection. Owner/State review and approval will be in addition to the 90-day time frame.

2.7 Vendor shall notify Owner/State of any issues occurring with forms filed with FAA for the selected site, and any re-submission of site selection forms.

2.8 Vendor shall anticipate the possibility of multiple siting visits per airport, if necessary.

3. FCC License(s)

3.1. Vendor must submit necessary forms and acquire Federal Communications Commission License for an AWOS VHF broadcast license. If required, Vendor shall also submit all necessary forms and acquire FCC license for UHF license.

3.2. Vendor shall coordinate and monitor the receipt of the licenses with Owner/State and FCC to ensure all necessary licenses are received. Vendor shall submit report to Owner/State with all FCC license call signs and expiration dates.

4. Site Preparation

4.1 The Vendor shall provide all necessary site preparation work for installation of the AWOS, which includes, but is not limited to removal of existing AWOS, foundations and grounding systems if necessary, grading, leveling, grubbing, and making the site acceptable for installation of necessary foundations and equipment.

4.2 Electrical power supply and telephone line for the operation of the system shall be provided by the airport sponsor. The electrical power supply shall terminate with an electrical disconnect 25 feet from the designated installation location. The telephone line shall also terminate at this location in an appropriate box.

4.3 Vendor shall provide and install control and data cables in conduit from the AWOS CPU to remote sensors. RF transmitter and receiver shall be provided to the site by the Vendor, if required.

4.4 If needed, Vendor shall construct concrete foundations for tower base and other equipment. AWOS Manufacturer shall submit foundation drawings specific to selected site and equipment with specified concrete compressive strength and reinforcing requirements.

4.5 Following installation, site shall be cleaned, debris removed, and surface leveled to that of surrounding areas to allow for mowing and maintenance of the area disturbed.

5. Installation:

5.1. Vendor shall not proceed with installation until approved schedule is developed and only following a notice to proceed by the Owner.

5.2 The work shall be performed by the AWOS manufacturer or approved contractor regularly engaged in work of this type, and shall include furnishing and installing the equipment, calibration, start-up, and commissioning of equipment.

5.3 Sensors shall be installed at the locations and elevations as approved by Owner/State and the Federal Aviation Administration. All connections of the cables to the sensors, AWOS tower, processing unit and data terminal will be in accordance with the manufacturer's specifications. VHF antenna shall be mounted at the AWOS site unless other location is approved by Owner/State.

5.4 Vendor shall provide and install control and data cables in conduit from the AWOS CPU to remote sensors. RF transmitter and receiver shall be provided to the site by the Vendor, if required.

5.5 Vendor shall anticipate multiple installation visits as conditions dictate.

6. Equipment:

6.1. AWOS III Instrumentation: The systems to be installed shall be FAA certified as AWOS III or AWOS III P/T as finally configured at time of contract award. All equipment provided shall be new and meet the specifications in FAA AC 150/5220-16 (latest revision).

6.1.1. Tower: Existing tower can be refurbished and used if it meets current standards and Vendor equipment. If new tower is needed, Vendor shall install either a self-supporting or a tilt-over tower as specified by manufacturer for the system and as indicated on the project specific bid form. The tilt-over tower shall have a steel supporting rest in a concrete foundation that is required to hold tower in its tilt-down position without touching ground. Either tower type shall not exceed the height specified for the equipment to be installed on the tower.

The tower shall be painted with a six-band marking with alternating bands of aviation surface orange (the top band) and white. The bandwidths shall be 1/6 of the height of the tower and perpendicular to the vertical axis of the tower with the bands at each end-colored orange. Paint and aviation colors shall conform to Federal Standards. The tower shall be primed in accordance with the tower manufacturer's specifications prior to painting.

A Dual L-810 obstruction light shall be placed within 5 feet of the top of the tower in accordance with FAA requirements. The two lamps on the L810 shall be wired in parallel on a dedicated circuit.

6.1.2 Voice Subsystem: A. The voice subsystem shall provide high quality, computer-generated speech for output of the AWOS observation. The voice subsystem should also provide the speech for the local ground-air radio broadcast and for telephone dial-up users. The system shall have the capability of hooking up to a minimum of two (2) phone lines, and for the addition of a manually input voice message at the end of the computer-generated voice message. The system shall have the capability of remotely programming a voice message via telephone. A security access code shall prevent unauthorized use, and the system will automatically play back the recorded message and allow the user to reprogram, delete, or accept the message.

6.1.3 Uninterruptible Power Supply: The Vendor shall provide a UPS to regulate power and provide a back-up power supply source for power outages. The UPS shall be capable of powering the AWOS for a minimum of one (1) hour.

6.1.4 NADIN/WMSCR Interface: The AWOS shall include equipment for interfacing with a Vendor that is approved to download information through the National Airspace Data Interchange Network (NADIN) and into the Weather Message Switching Center Replacement (WMSCR). Vendor shall provide one (1) year of NADIN connection service to be concurrent with AWOS maintenance contract.

6.1.5 Transient and Lightning Protection: AWOS equipment should be protected against damage or operational upset due to lightning surges, power line transients and surges, and from other electromagnetic fields and charges on all sensor input lines, sensor supply lines, and incoming power and data communications lines. Lightning protection systems shall be designed and installed in accordance with the Lightning Protection Code, NFPA 780, and the manufacturer recommendations for all equipment.

6.1.6 Test Equipment: The Contractor shall supply the Owner with the necessary test equipment to maintain the AWOS weather sensors according to the manufacturer's FAA approved maintenance plan.

6.1.7 Spare Components: The Contractor shall provide the Owner with the manufacturer's minimum recommended spare components necessary to restore the AWOS to service following a malfunction.

6.1.8 Maintenance Agreement: The Vendor shall provide a one (1) year AWOS maintenance agreement that meets the requirements of FAA AC No. 150/5220-16 (latest revision) and begins on the date of FAA commissioning. The maintenance agreement shall include all required inspections and maintenance as defined by AC No. 150/5220-16 (latest revision) but will not include any repairs made under the one year warranty for the installed system.

7. Additional Services

7.1. The Vendor will perform the following:

a. Conduct all required systems performance tests. System must be in total working condition before scheduling FAA site commissioning. If multiple FAA commissioning visits are necessary, Vendor shall reimburse other contractors, the FAA, and the owner for associated additional travel costs if requested.

b. Prepare the AWOS for the FAA ground check. Place and keep the AWOS in an operational test mode until it is certified by the FAA. If the FAA disapproves either the ground check or flight check, the Vendor shall correct the discrepancies and re-schedule the FAA ground or flight check.

c. Provide a qualified technician on site for any required FAA ground check, flight check, and site commissioning of the AWOS.

d. Post any certificates and notices required in AC 150/5220-16, (latest version).

e. Vendor to schedule a session after commissioning at the airport to provide complete system operation, maintenance, and repair training. Vendor will ensure that all

airport representatives and operators as designated by the owner are notified of the training session and will personally conduct the training on site.

f. Provide one complete set of AWOS system manuals to the owner.

8. Basis of Payment

8.1 Siting, Licensing and Installation:

a. Each system shall be installed in accordance with the Plans and General and Special Provisions. The unit price shall be full compensation for all labor, equipment, materials, peripherals, training, services, one year warranty, one year of AWOS System Maintenance, and incidentals as necessary to place the system in operation to the satisfaction of the Owner/State and be ready for commissioning by the Federal Aviation Administration.

b. The contractor is eligible to receive payment up to 95% of the contract amount pending final inspection and acceptance by Owner/State. Release of final payment does not release Vendor of obligation to have equipment certified and commissioned by FAA. Vendor shall correct, repair and/or replace any equipment necessary to have equipment commissioned by FAA. Vendor is not released from this contract until final commissioning of the system.

c. Vendor shall make all necessary repairs, corrections, changes, and modifications to the AWOS system before acceptance by Owner/State. The airport owner should not be relied upon at any time to assist or make the necessary repairs, corrections, changes, or modifications.

WAGE RATES

"General Decision Number: TX20260007 01/02/2026

Superseded General Decision Number: TX20250007

State: Texas

Construction Type: Heavy

Counties: Atascosa, Bandera, Bastrop, Bell, Bexar, Brazos, Burleson, Caldwell, Comal, Coryell, Guadalupe, Hays, Kendall, Lampasas, McLennan, Medina, Robertson, Travis, Williamson and Wilson Counties in Texas.

HEAVY (excluding tunnels and dams, not to be used for work on Sewage or Water Treatment Plants or Lift / Pump Stations in Bell, Coryell, McClennon and Williamson Counties) Construction Projects

Modification Number	Publication Date
0	01/02/2026

SUTX2011-006 08/03/2011

	Rates	Fringes
CEMENT MASON/CONCRETE FINISHER (Paving and Structures)	$ 12.56	
ELECTRICIAN	$ 26.35	
FORM BUILDER/FORM SETTER		
Paving & Curb	$ 12.94	
Structures	$ 12.87	
LABORER		
Asphalt Raker	$ 12.12	
Flagger	$ 9.45	
Laborer, Common	$ 10.50	
Laborer, Utility	$ 12.27	
Pipelayer	$ 12.79	
Work Zone Barricade Servicer	$ 11.85	
PAINTER (Structures)	$ 18.34	
POWER EQUIPMENT OPERATOR:		
Agricultural Tractor	$ 12.69	
Asphalt Distributor	$ 15.55	
Asphalt Paving Machine	$ 14.36	
Boom Truck	$ 18.36	
Broom or Sweeper	$ 11.04	
Concrete Pavement Finishing Machine	$ 15.48	
Crane, Hydraulic 80 tons or less	$ 18.36	
Crane, Lattice Boom 80 tons or less	$ 15.87	
Crane, Lattice Boom over 80 tons	$ 19.38	
Crawler Tractor	$ 15.67	
Directional Drilling		

Locator.....$ 11.67
Directional Drilling
Operator.....$ 17.24
Excavator 50,000 lbs or
Less.....$ 12.88
Excavator over 50,000 lbs...$ 17.71
Foundation Drill, Truck
Mounted.....$ 16.93
Front End Loader, 3 CY or
Less.....$ 13.04
Front End Loader, Over 3 CY.$ 13.21
Loader/Backhoe.....$ 14.12
Mechanic.....$ 17.10
Milling Machine.....$ 14.18
Motor Grader, Fine Grade....$ 18.51
Motor Grader, Rough.....$ 14.63
Pavement Marking Machine....$ 19.17
Reclaimer/Pulverizer.....$ 12.88
Roller, Asphalt.....$ 12.78
Roller, Other.....$ 10.50
Scraper.....$ 12.27
Spreader Box.....$ 14.04
Trenching Machine, Heavy....$ 18.48

Servicer.....$ 14.51

Steel Worker
Reinforcing.....$ 14.00
Structural.....$ 19.29

TRAFFIC SIGNALIZATION:
Traffic Signal Installation
Traffic Signal/Light Pole
Worker.....$ 16.00

TRUCK DRIVER
Lowboy-Float.....$ 15.66
Off Road Hauler.....$ 11.88
Single Axle.....$ 11.79
Single or Tandem Axle Dump
Truck.....$ 11.68
Tandem Axle Tractor w/Semi
Trailer.....$ 12.81

WELDER.....$ 15.97

WELDERS - Receive rate prescribed for craft performing
operation to which welding is incidental.

==========

Note: Executive Order (EO) 13706, Establishing Paid Sick Leave for Federal Contractors applies to all contracts subject to the Davis-Bacon Act for which the contract is awarded (and any solicitation was issued) on or after January 1, 2017. If this contract is covered by the EO, the contractor must provide employees with 1 hour of paid sick leave for every 30 hours they work, up to 56 hours of paid sick leave each year. Employees must be permitted to use paid sick leave for their own illness, injury or other health-related needs, including preventive care; to assist a family member (or person who is like family to the employee) who is ill, injured, or has other health-related needs, including preventive care; or for reasons resulting from, or to assist a family member (or person who is

like family to the employee) who is a victim of, domestic violence, sexual assault, or stalking. Additional information on contractor requirements and worker protections under the EO is available at https://www.dol.gov/agencies/whd/government-contracts.

Note: Executive Order 13658 generally applies to contracts subject to the Davis-Bacon Act that were awarded on or between January 1, 2015 and January 29, 2022, and that have not been renewed or extended on or after January 30, 2022. Executive Order 13658 does not apply to contracts subject only to the Davis-Bacon Related Acts regardless of when they were awarded. If a contract is subject to Executive Order 13658, the contractor must pay all covered workers at least $13.30 per hour (or the applicable wage rate listed on this wage determination, if it is higher) for all hours spent performing on the contract in 2025. The applicable Executive Order minimum wage rate will be adjusted annually. Additional information on contractor requirements and worker protections under Executive Order 13658 is available at www.dol.gov/whd/govcontracts.

Unlisted classifications needed for work not included within the scope of the classifications listed may be added after award only as provided in the labor standards contract clauses (29CFR 5.5 (a) (1) (iii)).

The body of each wage determination lists the classifications and wage rates that have been found to be prevailing for the type(s) of construction and geographic area covered by the wage determination. The classifications are listed in alphabetical order under rate identifiers indicating whether the particular rate is a union rate (current union negotiated rate), a survey rate, a weighted union average rate, a state adopted rate, or a supplemental classification rate.

Union Rate Identifiers

A four-letter identifier beginning with characters other than ""SU"", ""UAVG"", ?SA?, or ?SC? denotes that a union rate was prevailing for that classification in the survey. Example: PLUM0198-005 07/01/2024. PLUM is an identifier of the union whose collectively bargained rate prevailed in the survey for this classification, which in this example would be Plumbers. 0198 indicates the local union number or district council number where applicable, i.e., Plumbers Local 0198. The next number, 005 in the example, is an internal number used in processing the wage determination. The date, 07/01/2024 in the example, is the effective date of the most current negotiated rate.

Union prevailing wage rates are updated to reflect all changes over time that are reported to WHD in the rates in the collective bargaining agreement (CBA) governing the classification.

Union Average Rate Identifiers

The UAVG identifier indicates that no single rate prevailed for those classifications, but that 100% of the data reported for the classifications reflected union rates. EXAMPLE: UAVG-OH-0010 01/01/2024. UAVG indicates that the rate is a

weighted union average rate. OH indicates the State of Ohio. The next number, 0010 in the example, is an internal number used in producing the wage determination. The date, 01/01/2024 in the example, indicates the date the wage determination was updated to reflect the most current union average rate.

A UAVG rate will be updated once a year, usually in January, to reflect a weighted average of the current rates in the collective bargaining agreements on which the rate is based.

Survey Rate Identifiers

The ""SU"" identifier indicates that either a single non-union rate prevailed (as defined in 29 CFR 1.2) for this classification in the survey or that the rate was derived by computing a weighted average rate based on all the rates reported in the survey for that classification. As a weighted average rate includes all rates reported in the survey, it may include both union and non-union rates. Example: SUFL2022-007 6/27/2024. SU indicates the rate is a single non-union prevailing rate or a weighted average of survey data for that classification. FL indicates the State of Florida. 2022 is the year of the survey on which these classifications and rates are based. The next number, 007 in the example, is an internal number used in producing the wage determination. The date, 6/27/2024 in the example, indicates the survey completion date for the classifications and rates under that identifier.

?SU? wage rates typically remain in effect until a new survey is conducted. However, the Wage and Hour Division (WHD) has the discretion to update such rates under 29 CFR 1.6(c)(1).

State Adopted Rate Identifiers

The ""SA"" identifier indicates that the classifications and prevailing wage rates set by a state (or local) government were adopted under 29 C.F.R 1.3(g)-(h). Example: SAME2023-007 01/03/2024. SA reflects that the rates are state adopted. ME refers to the State of Maine. 2023 is the year during which the state completed the survey on which the listed classifications and rates are based. The next number, 007 in the example, is an internal number used in producing the wage determination. The date, 01/03/2024 in the example, reflects the date on which the classifications and rates under the ?SA? identifier took effect under state law in the state from which the rates were adopted.

WAGE DETERMINATION APPEALS PROCESS

1) Has there been an initial decision in the matter? This can be:

a) a survey underlying a wage determination
b) an existing published wage determination
c) an initial WHD letter setting forth a position on a wage determination matter
d) an initial conformance (additional classification and rate) determination

On survey related matters, initial contact, including requests for summaries of surveys, should be directed to the WHD Branch of Wage Surveys. Requests can be submitted via email to davisbaconinfo@dol.gov or by mail to:

Branch of Wage Surveys
Wage and Hour Division
U.S. Department of Labor
200 Constitution Avenue, N.W.
Washington, DC 20210

Regarding any other wage determination matter such as conformance decisions, requests for initial decisions should be directed to the WHD Branch of Construction Wage Determinations. Requests can be submitted via email to BCWD-Office@dol.gov or by mail to:

Branch of Construction Wage Determinations
Wage and Hour Division
U.S. Department of Labor
200 Constitution Avenue, N.W.
Washington, DC 20210

2) If an initial decision has been issued, then any interested party (those affected by the action) that disagrees with the decision can request review and reconsideration from the Wage and Hour Administrator (See 29 CFR Part 1.8 and 29 CFR Part 7). Requests for review and reconsideration can be submitted via email to dba.reconsideration@dol.gov or by mail to:

Wage and Hour Administrator
U.S. Department of Labor
200 Constitution Avenue, N.W.
Washington, DC 20210

The request should be accompanied by a full statement of the interested party's position and any information (wage payment data, project description, area practice material, etc.) that the requestor considers relevant to the issue.

3) If the decision of the Administrator is not favorable, an interested party may appeal directly to the Administrative Review Board (formerly the Wage Appeals Board). Write to:

Administrative Review Board
U.S. Department of Labor
200 Constitution Avenue, N.W.
Washington, DC 20210.

==========

END OF GENERAL DECISION
"

AIRPORT LAYOUT PLAN AND PROPERTY MAP

BUILDING TABLE			
BLDG #	DESCRIPTION		ELEVATION
	EXISTING	ULTIMATE	
13	BLDG ESTIMATED		1245.0
21	BLDG ESTIMATED		1245.0
14	BLDG FROM EX ALP		1240.9
15	BLDG ESTIMATED		1245.0
16	BLDG FROM EX ALP		1238.4
17	BLDG ESTIMATED		1250.0
18	BLDG FROM EXTG INFO		1243.9
19	BLDG ESTIMATED		1250.0
20	BLDG FROM EXTG INFO		1244.0
22	BLDG ESTIMATED		1250.0
23	BLDG ESTIMATED		1245.0
24	BLDG FROM EXTG INFO		1241.6
25	BLDG FROM EXTG INFO		1250.9
26	BLDG ESTIMATED		1245.0
27	BLDG FROM EXTG INFO		1245.5
28	BLDG ESTIMATED		1235.0
29	BLDG ESTIMATED		1250.0
30	BLDG FROM EXTG INFO		1235.9
31	BLDG FROM EXTG INFO		1236.6
32	BLDG ESTIMATED		1235.0
33	BLDG FROM EXTG INFO		1234.3
34	BLDG FROM EXTG INFO		1240.2
35	BLDG FROM EXTG INFO		1228.1
36	BLDG ESTIMATED		1235.0
37	BLDG FROM EXTG INFO		1233.5
38	BLDG FROM EXTG INFO		1232.8
39	BLDG FROM EXTG INFO		1241.4
103	BLDG ESTIMATED		1250.0
40	BLDG ESTIMATED		1235.0
104	BLDG ESTIMATED		1240.0
41	BLDG ESTIMATED		1235.0
105	BLDG ESTIMATED		1240.0
42	BLDG FROM EXTG INFO		1224.6
106	BLDG ESTIMATED		1240.0
43	BLDG ESTIMATED		1235.0
107	BLDG ESTIMATED		1240.0
44	BLDG FROM EXTG INFO		1224.6
108	BLDG ESTIMATED		1240.0
45	BLDG ESTIMATED		1235.0
109	BLDG ESTIMATED		1240.0
46	BLDG ESTIMATED		1215.0
110	BLDG ESTIMATED		1230.0
47	BLDG FROM EXTG INFO		1214.9
111	BLDG ESTIMATED		1230.0

BUILDING TABLE			
BLDG #	DESCRIPTION		ELEVATION
	EXISTING	ULTIMATE	
48	BLDG FROM EXTG INFO		1234.4
49	BLDG ESTIMATED		1220.0
50	BLDG FROM EXTG INFO		1235.2
53	BLDG ESTIMATED		1220.0
54	BLDG ESTIMATED		1220.0
55	BLDG from 5010		1223.3
56	BLDG from 5010		1224.3

COMMENTS

ALL HANGARS ARE LOCATED OFF AIRPORT PROPERTY AND ARE PRIVATELY OWNED WITH THROUGH THE FENCE OPERATIONS.

ESTIMATED HEIGHTS FOR NEWER HANGARS – NOT SURVEYED.

ALL HANGARS EXCEPT #11 AND 12 ARE WITHIN THE PART 77 PRIMARY SURFACE, AND IF NOT PREVIOUSLY STUDIED UNDER FAA 7460 SHOULD BE STUDIED FOR POSSIBLE MITIGATIONS.

RUNWAY DATA TABLE				
	RW 15–33			
	EXISTING		ULTIMATE	
RUNWAY ARC	B–I (SMALL)		B–I (SMALL)	
DESIGN AIRCRAFT & ARC	B–II 12.5KSW		B–II 12.5KSW	
BALANCED FIELD LENGTH	?		?	
RUNWAY LENGTH & WIDTH (ft.)	3808' X 50'		4608' X 60'	
PAVEMENT DESIGN STRENGTH (lbs.)	12,500 SW		12,500 SW	
RUNWAY LIGHTING	MIRL		MIRL	
PERCENT EFFECTIVE GRADIENT	0.56%		0.56%	
PERCENT WIND COVERAGE	98.49%		98.49%	
MAXIMUM ELEVATION ABOVE MSL	1230.4'		1237.5'	
RW SURFACE TYPE	ASPH		ASPH	
RSA – LENGTH BEYOND RW END	240'		240'	
RSA – WIDTH	120'		120'	
OFA – LENGTH BEYOND RW END	240'		240'	
OFA WIDTH	400'		400'	
OFZ – LENGTH BEYOND RW END	200'		200'	
OFZ WIDTH	250'		250'	
RUNWAY END	15	33	15	33
APPROACH TYPE	GPS	VISUAL	GPS	GPS
APPROACH VISIBILITY MINIMA	1 MILE	VISUAL	1 MILE	1 MILE
THRESHOLD SITING SURFACE & SLOPE	#6 20:1	#6 20:1	#5 20:1	#6 20:1
RUNWAY MARKING	NPI	NPI	NPI	NPI
RUNWAY VISUAL AIDS	PAPI	PAPI	PAPI	PAPI
TOUCHDOWN ZONE ELEVATION	1230.4'	1222.9'	1237.5'	1222.9'
FAR PART 77 APPROACH CATEGORY	A(NP)	A(V)	A(NP)	A(NP)
FAR PART 77 APPROACH SURFACE SLOPE	20:1	20:1	20:1	20:1
TAKE–OFF RUN AVAILABLE (TORA)	3808'	3808'	4608'	4608'
TAKE–OFF DISTANCE AVAILABLE (TODA)	3808'	3808'	4608'	4608'
ACCELERATE STOP DISTANCE AVAIL. (ASDA)	3808'	3808'	4608'	4608'
LANDING DISTANCE AVAILABLE (LDA)	3808'	3808'	4608'	4608'

COMMENTS

THERE IS NO SURVEY DATA FOR THE AIRPORT.

50' RUNWAY WIDTH DOES NOT MEET CURRENT FAA STANDARDS FOR DEVELOPMENT OF NEW INSTRUMENT APPROACH PROCEDURES. THE CURRENT STANDARD IS FOR 60' MINIMUM RUNWAY WIDTH FOR CATEGORY A AND B ONLY AIRCRAFT.

THE GLIDESLOPE QUALIFICATION SURFACE AND THRESHOLD SITING SURFACES EACH HAVE PENETRATIONS THAT WILL PRECLUDE DEVELOPMENT OF NEW INSTRUMENT APPROACH PROCEDURES.

RUNWAY END COORDINATES AND ELEVATIONS			
RUNWAY END	LATITUDE	LONGITUDE	ELEVATION
EXISTING END OF RWY 15	30°30'12.76" N	97°58'17.04" W	1230.4'
ULTIMATE END OF RWY 15	30°30'20.26" N	97°58'19.97" W	1237.5'
EXISTING END OF RWY 33	30°29'37.07" N	97°58'03.08" W	1209.3'

AIRPORT DATA TABLE		
	EXISTING	ULTIMATE
AIRPORT ELEVATION (MSL)	1230.4'	1237.5'
AIRPORT NAVIGATION AIDS	GPS	GPS
MEAN MAX TEMP (Hottest Month °F)	95°	95°
AIRPORT REFERENCE CODE (ARC)	B–I (SMALL)	B–I (SMALL)
TAXIWAY MARKING	STD W/ ℄ REF	STD W/ ℄ REF
TAXIWAY LIGHTING	NONE	NONE
AIRPORT REFERENCE POINT COORDINATES	30°29'54.9" N	30°29'58.7" N
	97°58'10.1" W	97°58'11.5" W

NOTES

DATUM COORDINATE SYSTEMS – HORIZONTAL DATUM NAD_1983_StatePlane_Texas_Central_FIPS_4203_Feet, VERTICAL DATUM NAVD88.

A SURVEY WAS NOT PERFORMED WITH THIS ALP – THE BEST EXISTING DATA WAS USED, BUT MAY NOT INCLUDE ALL RELEVANT ELEVATIONS AND OBSTRUCTIONS.

TAXIWAYS ON WEST SIDE OF RUNWAY DO NOT MEET CURRENT FAA STANDARDS FOR SEPARATION FROM THE RUNWAY CENTERLINE OR OFZ STANDARDS.

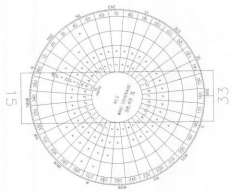

WIND DATA:
AUSTIN, 2007 TO 2016

MAGNETIC DECLINATION 4°4' E CHANGING 0°7' W/YEAR

0' 300'

SEE IPASD FOR THRESHOLD SITING SURFACE PENETRATIONS
NO SURVEY WAS CONDUCTED AS PART OF THIS ALP UPDATE. ALL OBSTRUCTION DATA WAS FROM PREVIOUS UNVERIFIED DATA AND ESTIMATIONS.

OBSTACLE FREE ZONE PENETRATIONS		
SIG OBJ NO.	OBJECT DESCRIPTION	REMEDIATION
	GROUND	REGRADE DURING NEXT RW RECONSTRUCTION
	HOLD POSITIONS	RELOCATE HOLD POSITIONS OUTSIDE OFZ ASAP
–	–	–

TxDOT master plans and ALPs do not consider cost, feasibility, practicality, or physical constraints and may be impossible to build.

1" = 300'

TEXAS DEPARTMENT OF TRANSPORTATION
AVIATION DIVISION

ALP APPROVED ACCORDING TO FAA AC 150/5300–13A PLUS THE REQUIREMENTS OF A FAVORABLE ENVIRONMENTAL FINDING AND FAA NRA STUDY PRIOR TO THE START OF ANY LAND ACQUISITION OR CONSTRUCTION ON AIRPORT PROPERTY.

COPYRIGHT 2015 TXDOT AVIATION DIVISION, ALL RIGHTS RESERVED.

4/3/17
DAVID FULTON, DIRECTOR, AVIATION DIVISION — DATE

AIRPORT SPONSOR

CURRENT AND FUTURE DEVELOPMENT DEPICTED ON THIS ALP IS APPROVED AND SUPPORTED BY AIRPORT SPONSOR

SPONSOR ACKNOWLEDGES APPROVAL OF ALP BY TXDOT DOES NOT CONSTITUTE A COMMITMENT TO FUNDING.

David Harrell 3-31-2017
SIGNATURE — DATE
Development Services Director
TITLE, AIRPORT SPONSOR'S REPRESENTATIVE

PREPARED BY:
PSC PARKHILLSMITH&COOPER

DM FEB 2017
DESIGNED BY — DATE

DM FEB 2017
DRAWN BY: — DATE

AIRPORT LAYOUT DRAWING
LAGO VISTA – RUSTY ALLEN AIRPORT
LAGO VISTA, TEXAS (RYW)

Texas Department of Transportation
Aviation Division

SHEET 1 OF 1

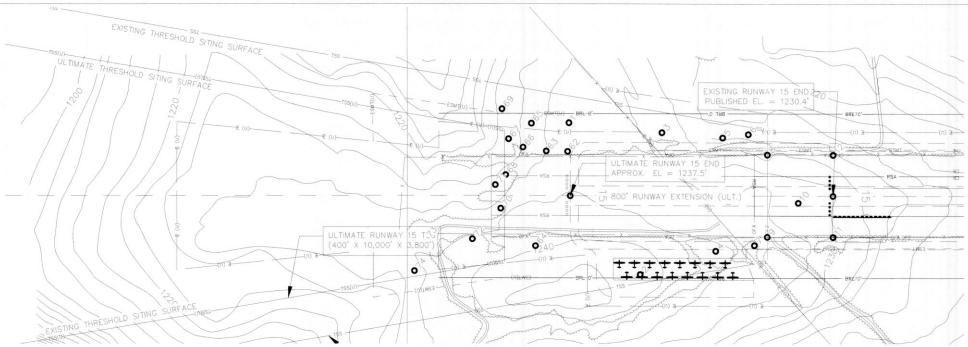

RUNWAY 15 EXISTING AND ULTIMATE PLAN

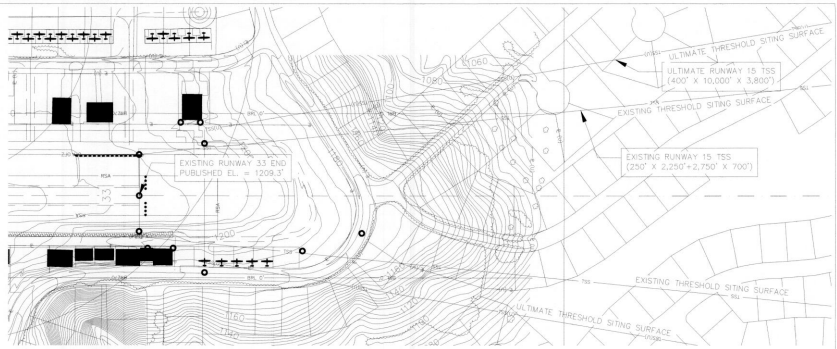

RUNWAY 33 EXISTING AND ULTIMATE PLAN

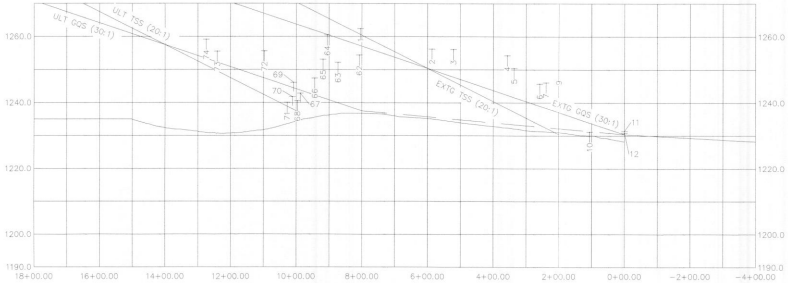

RUNWAY 15 EXISTING AND ULTIMATE PROFILE

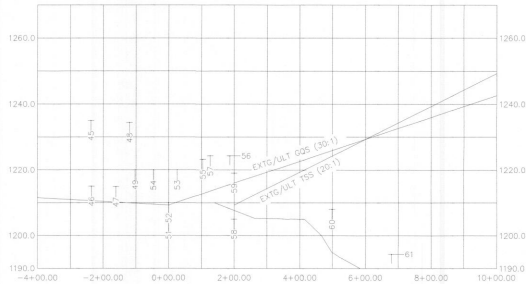

RUNWAY 33 EXISTING AND ULTIMATE PROFILE

TxDOT master plans and ALPs do not consider cost, feasibility, practicality, or physical constraints and may be impossible to build.

0 200 400 600

1" = 200'

MAGNETIC DECLINATION 4°44' E CHANGING 0°7' W/YEAR

AIRPORT DATA TABLE		
	EXISTING	ULTIMATE
AIRPORT ELEVATION (MSL)	1230.4'	1237.5'
AIRPORT NAVIGATION AIDS	GPS	GPS
MEAN MAX TEMP (Hottest Month °F)	95°	95°
AIRPORT REFERENCE CODE (ARC)	B-I (SMALL)	B-I (SMALL)
TAXIWAY MARKING	STD W/ 5 REF	STD W/ 5 REF
TAXIWAY LIGHTING	NONE	NONE
AIRPORT REFERENCE POINT COORDINATES	30°29'54.9" N 97°58'10.1" W	30°29'58.7" N 97°58'11.5" W

NOTES

DATUM COORDINATE SYSTEMS – HORIZONTAL DATUM NAD_1983_StatePlane_Texas_Central_FIPS_4203_Feet, VERTICAL DATUM NAVD88.

A SURVEY WAS NOT PERFORMED WITH THIS ALP – THE BEST EXISTING DATA WAS USED, BUT MAY NOT INCLUDE ALL RELEVANT ELEVATIONS AND OBSTRUCTIONS.

TAXIWAYS ON WEST SIDE OF RUNWAY DO NOT MEET CURRENT FAA STANDARDS FOR SEPARATION FROM THE RUNWAY CENTERLINE OR OFZ STANDARDS.

IPASD LEGEND		
FEATURE	EXISTING	ULTIMATE
RUNWAY/TAXIWAY OUTLINE		
RUNWAY/TAXIWAY TO BE REMOVED		
BUILDINGS/FACILITIES		
AIRPORT PROPERTY LINE		(U)
AIRPORT PROPERTY LINE w/FENCE		(U)
THRESHOLD SITING SURFACE	TSS	TSS (U)
FENCE LINE		
THRESHOLD LIGHTS		
RW END IDENTIFIER LIGHTS (REILS)		
GROUND CONTOURS		
SIGNIFICANT OBJECT PLAN VIEW		
SIGNIFICANT OBJECT PROFILE VIEW		
TREES/BRUSH		

PENETRATIONS TO EXISTING AND ULTIMATE PART 77 SURFACES

NO	OBJECT DESCRIPTION	LATITUDE (N)	LONGITUDE (W)	DISTANCE FROM RW END	OFFSET FROM RW C/L	TOP ELEVATION	AMOUNT OF PENETRATION TO EXISTING PART 77	AMOUNT OF PENETRATION TO ULTIMATE PART 77	REMEDIATION
1	TREE FROM PREV ALP	30.302101	-97.581758	804	222	1262.4	1.8	24.9	VERIFY CURRENT STATUS AND ELEVATION, CONSULT WITH TXDOT
2	TREE FROM PREV ALP	30.301750	-97.582178	586	-240	1256.3	6.5	20.7	VERIFY CURRENT STATUS AND ELEVATION, CONSULT WITH TXDOT
3	TREE FROM PREV ALP	30.301826	-97.581687	521	192	1256.1	9.7	21.1	VERIFY CURRENT STATUS AND ELEVATION, CONSULT WITH TXDOT
4	TREE FROM PREV ALP	30.301558	-97.582016	357	-168	1254.3	16.0	20.7	VERIFY CURRENT STATUS AND ELEVATION, CONSULT WITH TXDOT
5	TREE FROM PREV ALP	30.301648	-97.581635	336	177	1250.4	13.2	17.0	VERIFY CURRENT STATUS AND ELEVATION, CONSULT WITH TXDOT
6	TREE FROM PREV ALP	30.301578	-97.581596	258	187	1245.7	12.4	13.1	VERIFY CURRENT STATUS AND ELEVATION, CONSULT WITH TXDOT
7	TREE FROM PREV ALP	30.301453	-97.581954	239	-151	1246.1	13.7	13.6	VERIFY CURRENT STATUS AND ELEVATION, CONSULT WITH TXDOT
8	TREE FROM 5010	30.301503	-97.581642	200	125	1250.0	19.6	17.8	VERIFY CURRENT STATUS AND ELEVATION, CONSULT WITH TXDOT
9	TREE FROM 5010	30.301424	-97.581912	200	-125	1250.0	19.6	17.8	VERIFY CURRENT STATUS AND ELEVATION, CONSULT WITH TXDOT
10	GROUND FROM PREV ALP	30.301369	-97.581765	106	-21	1231.2	0.8	-0.2	VERIFY CURRENT STATUS AND ELEVATION, CONSULT WITH TXDOT
11	TAXIWAY PVMT FROM PREVIOUS ALP	30.301236	-97.581839	0	-125	1231.4	1.0	1.0	VERIFY CURRENT STATUS AND ELEVATION, CONSULT WITH TXDOT
12	GROUND FROM PREV ALP	30.301316	-97.581569	0	125	1230.9	0.5	0.5	VERIFY CURRENT STATUS AND ELEVATION, CONSULT WITH TXDOT
45	BLDG ESTIMATED	30.293998	-97.580158	-237	-218	1235.0	24.4	24.4	VERIFY CURRENT STATUS AND ELEVATION, CONSULT WITH TXDOT
46	BLDG ESTIMATED	30.293874	-97.580580	-236	171	1215.0	4.4	4.4	VERIFY CURRENT STATUS AND ELEVATION, CONSULT WITH TXDOT
47	BLDG FROM EXTG INFO	30.293802	-97.580558	-162	176	1214.9	4.7	4.7	VERIFY CURRENT STATUS AND ELEVATION, CONSULT WITH TXDOT
48	BLDG FROM EXTG INFO	30.293899	-97.580079	-120	-252	1234.4	24.1	24.1	VERIFY CURRENT STATUS AND ELEVATION, CONSULT WITH TXDOT
49	BLDG ESTIMATED	30.293750	-97.580526	-103	167	1220.0	10.1	10.1	VERIFY CURRENT STATUS AND ELEVATION, CONSULT WITH TXDOT
51	GROUND FROM PREV ALP	30.293672	-97.580426	0	109	1204.4	-4.9	-4.9	N/A
52	TAXIWAY PVMT FROM PREV ALP	30.293747	-97.580173	1	-125	1210.0	0.7	0.7	VERIFY CURRENT STATUS AND ELEVATION, CONSULT WITH TXDOT
53	BLDG ESTIMATED	30.293631	-97.580471	26	160	1220.0	10.7	10.7	VERIFY CURRENT STATUS AND ELEVATION, CONSULT WITH TXDOT
54	BLDG ESTIMATED	30.293697	-97.580506	47	167	1220.0	10.4	10.4	VERIFY CURRENT STATUS AND ELEVATION, CONSULT WITH TXDOT
55	BLDG from 5010	30.293559	-97.580442	71	162	1223.3	14.0	14.0	VERIFY CURRENT STATUS AND ELEVATION, CONSULT WITH TXDOT
56	BLDG from 5010	30.293602	-97.575998	191	-230	1224.3	15.0	15.0	VERIFY CURRENT STATUS AND ELEVATION, CONSULT WITH TXDOT
57	BLDG from 5010	30.293658	-97.580020	191	-230	1224.3	15.0	15.0	VERIFY CURRENT STATUS AND ELEVATION, CONSULT WITH TXDOT
58	TAXIWAY PVMT FROM PREV ALP	30.293570	-97.580062	199	-159	1205.0	-4.3	-4.3	N/A
59	POWERLINE FROM 5010	30.293445	-97.580486	200	234	1219.0	9.7	9.7	VERIFY CURRENT STATUS AND ELEVATION, CONSULT WITH TXDOT
60	TREE FROM PREV ALP	30.293186	-97.580307	498	168	1208.1	-16.1	-16.1	N/A
61	RD INCREASED 15 FT	30.293033	-97.580182	679	114	1194.3	-39.0	-39.0	N/A
62	TREE FROM PREV ALP	30.302077	-97.581854	808	1613	1254.4	-6.4	16.9	VERIFY AND REMOVE PRIOR TO RUNWAY EXTENSION
63	TREE FROM PREV ALP	30.302138	-97.581877	873	1626	1252.2	-11.9	14.7	VERIFY AND REMOVE PRIOR TO RUNWAY EXTENSION
64	TREE FROM PREV ALP	30.302077	-97.582201	906	-1830	1260.4	-5.3	22.9	VERIFY AND REMOVE PRIOR TO RUNWAY EXTENSION
65	TREE FROM PREV ALP	30.302207	-97.581802	919	2638	1253.1	-13.2	15.6	VERIFY AND REMOVE PRIOR TO RUNWAY EXTENSION
66	TREE FROM PREV ALP	30.302208	-97.581890	944	1767	1247.4	-20.2	9.9	VERIFY AND REMOVE PRIOR TO RUNWAY EXTENSION
67	TREE FROM PREV ALP	30.302257	-97.581879	988	2074	1242.8	-27.0	5.3	VERIFY AND REMOVE PRIOR TO RUNWAY EXTENSION
68	TREE FROM PREV ALP	30.302231	-97.582000	996	760	1240.5	-29.7	3.0	VERIFY AND REMOVE PRIOR TO RUNWAY EXTENSION
69	TREE FROM PREV ALP	30.302305	-97.581768	1008	3164	1246.1	-24.7	6.4	VERIFY AND REMOVE PRIOR TO RUNWAY EXTENSION
70	TREE FROM PREV ALP	30.302212	-97.582116	1012	-465	1241.8	-29.2	3.7	VERIFY AND REMOVE PRIOR TO RUNWAY EXTENSION
71	TREE FROM PREV ALP	30.302251	-97.582044	1028	400	1240.0	-31.8	1.1	VERIFY AND REMOVE PRIOR TO RUNWAY EXTENSION
72	TREE FROM PREV ALP	30.302264	-97.582248	1098	-1578	1255.6	-19.7	13.2	VERIFY AND REMOVE PRIOR TO RUNWAY EXTENSION
73	TREE FROM PREV ALP	30.302397	-97.582304	1241	-1607	1255.5	-28.9	6.0	VERIFY AND REMOVE PRIOR TO RUNWAY EXTENSION
74	TREE FROM PREV ALP	30.302399	-97.582419	1275	-2744	1259.1	-25.0	7.9	VERIFY AND REMOVE PRIOR TO RUNWAY EXTENSION

PENETRATIONS TO EXISTING RUNWAY 15 THRESHOLD SITING SURFACE AND GQS

NO	OBJECT DESCRIPTION	LATITUDE (N)	LONGITUDE (W)	DISTANCE FROM RW END	OFFSET FROM RW C/L	TOP ELEVATION	AMOUNT OF PENETRATION TO GQS	AMOUNT OF PENETRATION TO TSS	REMEDIATION
1	TREE FROM PREV ALP	30.302101	-97.581758	804	222	1262.4	N/A	1.8	VERIFY STATUS AND ELEVATION, CONSULT WITH TXDOT
2	TREE FROM PREV ALP	30.301750	-97.582178	586	-240	1256.3	N/A	6.5	VERIFY STATUS AND ELEVATION, CONSULT WITH TXDOT
3	TREE FROM PREV ALP	30.301826	-97.581687	521	192	1256.1	N/A	9.7	VERIFY STATUS AND ELEVATION, CONSULT WITH TXDOT
4	TREE FROM PREV ALP	30.301558	-97.582016	357	-168	1254.3	N/A	16.0	VERIFY STATUS AND ELEVATION, CONSULT WITH TXDOT
5	TREE FROM PREV ALP	30.301648	-97.581635	336	177	1250.4	N/A	13.2	VERIFY STATUS AND ELEVATION, CONSULT WITH TXDOT
6	TREE FROM PREV ALP	30.301578	-97.581596	258	187	1245.7	N/A	12.4	VERIFY STATUS AND ELEVATION, CONSULT WITH TXDOT
7	TREE FROM PREV ALP	30.301453	-97.581954	239	-151	1246.1	N/A	13.7	VERIFY STATUS AND ELEVATION, CONSULT WITH TXDOT
8	TREE FROM 5010	30.301503	-97.581642	200	125	1250.0	12.9	19.6	VERIFY STATUS AND ELEVATION, CONSULT WITH TXDOT
9	TREE FROM 5010	30.301424	-97.581912	200	-125	1250.0	12.9	19.6	VERIFY STATUS AND ELEVATION, CONSULT WITH TXDOT

PENETRATIONS TO ULTIMATE RUNWAY 15 THRESHOLD SITING SURFACE AND GQS

NO	OBJECT DESCRIPTION	LATITUDE (N)	LONGITUDE (W)	DISTANCE FROM RW END	OFFSET FROM RW C/L	TOP ELEVATION	AMOUNT OF PENETRATION TO GQS	AMOUNT OF PENETRATION TO TSS	REMEDIATION
70	TREE FROM PREV ALP	30.302212	-97.582116	1012	-39	1241.8	-2.8	3.7	VERIFY, REMOVE BEFORE RUNWAY EXTENSION
71	TREE FROM PREV ALP	30.302251	-97.582044	1028	33	1240.0	-5.1	1.1	VERIFY, REMOVE BEFORE RUNWAY EXTENSION
72	TREE FROM PREV ALP	30.30226 4	-97.582248	1098	-131	1255.6	8.1	13.2	VERIFY, REMOVE BEFORE RUNWAY EXTENSION
73	TREE FROM PREV ALP	30.30239 7	-97.582304	1241	-134	1255.5	3.3	6.0	VERIFY, REMOVE BEFORE RUNWAY EXTENSION
74	TREE FROM PREV ALP	30.30239 9	-97.582419	1275	-229	1259.1	N/A	7.9	VERIFY, REMOVE BEFORE RUNWAY EXTENSION

PENETRATIONS TO EXISTING AND ULTIMATE RUNWAY 33 THRESHOLD SITING SURFACE

NO	OBJECT DESCRIPTION	LATITUDE (N)	LONGITUDE (W)	DISTANCE FROM RW END	OFFSET FROM RW C/L	TOP ELEVATION	AMOUNT OF PENETRATION TO GQS	AMOUNT OF PENETRATION TO TSS	REMEDIATION
#							N/A	N/A	ACCORDING TO AVAILABLE DATA, NO PENETRATIONS

THE PREPARATION OF THIS DOCUMENT MAY HAVE BEEN SUPPORTED, IN PART, THROUGH THE AIRPORT IMPROVEMENT PROGRAM FINANCIAL ASSISTANCE FROM THE FEDERAL AVIATION ADMINISTRATION AS PROVIDED UNDER TITLE 49, UNITED STATES CODE, SECTION 47104. THE CONTENTS DO NOT NECESSARILY REFLECT THE OFFICIAL VIEWS OR POLICY OF THE FAA. ACCEPTANCE OF THIS PLAN BY THE FAA DOES NOT IN ANY WAY CONSTITUTE A COMMITMENT ON THE PART OF THE UNITES STATES TO PARTICIPATE IN ANY DEVELOPMENT DEPICTED THEREIN NOR DOES IT INDICATE THAT THE PROPOSED DEVELOPMENT IS ENVIRONMENTALLY ACCEPTABLE IN ACCORDANCE WITH APPROPRIATE PUBLIC LAWS.

COPYRIGHT 2017
THIS DOCUMENT, OR ANY PORTION THEREOF, SHALL NOT BE DUPLICATED, DISCLOSED, OR USED ON ANY OTHER PROJECT OR EXTENSION OF THIS PROJECT EXCEPT BY WRITTEN AGREEMENT WITH PARKHILL, SMITH, & COOPER INC. PARKHILL, SMITH, & COOPER INC. SHALL NOT BE RESPONSIBLE FOR ANY UNAUTHORIZED USE OF, OR ALTERATION TO THESE DOCUMENTS.

TEXAS DEPARTMENT OF TRANSPORTATION
AVIATION DIVISION

ALP APPROVED ACCORDING TO FAA AC 150/5300-13A PLUS THE REQUIREMENTS OF A FAVORABLE ENVIRONMENTAL FINDING AND FAA NRA STUDY PRIOR TO THE START OF ANY LAND ACQUISITION OR CONSTRUCTION ON AIRPORT PROPERTY.

COPYRIGHT 2015 TXDOT AVIATION DIVISION, ALL RIGHTS RESERVED.

DAVID FULTON, DIRECTOR, AVIATION DIVISION — DATE 4/3/17

AIRPORT SPONSOR

CURRENT AND FUTURE DEVELOPMENT DEPICTED ON THIS ALP IS APPROVED AND SUPPORTED BY AIRPORT SPONSOR

SPONSOR ACKNOWLEDGES APPROVAL OF ALP BY TXDOT DOES NOT CONSTITUTE A COMMITMENT TO FUNDING.

SIGNATURE — DATE 3-31-17
DEVELOPMENT SERVICES DIRECTOR
TITLE, AIRPORT SPONSOR'S REPRESENTATIVE

PREPARED BY:
PSC PARKHILL SMITH & COOPER

DM — DESIGNED BY — DATE FEB 2017
DM — DRAWN BY — DATE FEB 2017

INNER PORTION OF THE APPROACH SURFACE
LAGO VISTA – RUSTY ALLEN AIRPORT
LAGO VISTA, TEXAS (RYW)

Texas Department of Transportation Aviation

SHEET 2

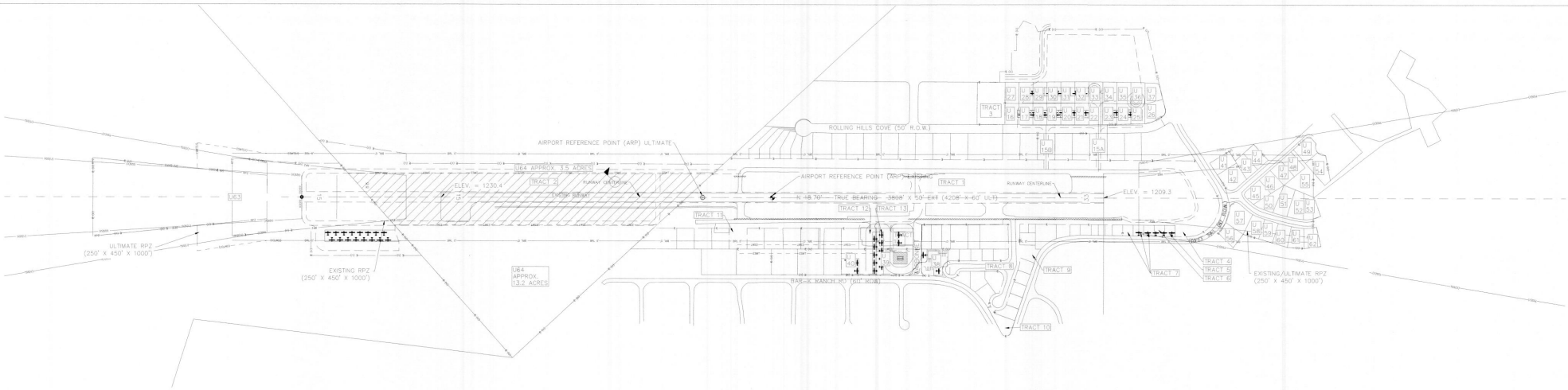

MAGNETIC
DECLINATION 4°4' E
CHANGING 0°7'
W/YEAR

0 300' 600'
1" = 300'

ALD LEGEND

FEATURE	EXISTING	ULTIMATE
RUNWAY/TAXIWAY OUTLINE		
RUNWAY/TAXIWAY TO BE REMOVED		
BUILDINGS/FACILITIES		
AIRPORT PROPERTY LINE		
AIRPORT PROPERTY LINE w/FENCE		
FENCE LINE		
BUILDING RESTRICTION LINE (BRL)		BRL 0'
AIRPORT REFERENCE POINT		
WIND CONE & SEGMENTED CIRCLE		
THRESHOLD LIGHTS		
RW END IDENTIFIER LIGHTS (REILS)		
C&G BEACON		
VGSI		
HOLD POSITION AND SIGN		
ASOS/AWOS		
PACS AND SACS MARKERS		
GROUND CONTOURS		
SIGNIFICANT OBJECT LOCATION		
TREES/BRUSH		
CITY LIMIT LINE		

NOTE: SEE AIRPORT TTF MAP FOR INFORMATION ON THROUGH THE FENCE PROPERTY INFORMATION

PROPERTY MAP PARCEL TABLE

TRACT	ACRES	TITLE	GRANTOR	TRAVIS COUNTY RECORDS VOL./PG. OR PROP. ID	DATE	FUNDING	REMARKS
1	26.88	WARRANTY DEED	RUSTY ALLEN AIRPORT	V12265/P1400	9/6/1994		
2	111.98	EASEMENT	606 LIMITED EASEMENT	V5149/P1734	2/21/1975		PERPETUAL RUNWAY EASEMENT WITH USFW
3	0.88	WARRANTY DEED	CITY OF LAGO VISTA	755119	9/29/2006		AWOS
4	0.06	WARRANTY DEED	DAVED A. WEISSENBERGER TRUST	2011111138	7/21/2011		
5	0.06	WARRANTY DEED	ANDREW DAVEID WEISSNEBERGER	2011113737	7/29/2011		
6	0.06	WARRANTY DEED	DAVID ANTHONY WEISSENBERGER	2011112056	7/20/2011		
7	0.17	WARRANTY DEED	SERSPEC ASSOCIATES, INC	2011118169	8/11/2011		
8	1.40	MISCELLANEOUS	CITY OF LAGO VISTA	524253	3/22/2005		
9	0.19	WARRANTY DEED	CITY OF LAGO VISTA	2005049097TR	3/21/2005		
10	0.23	WARRANTY DEED	CITY OF LAGO VISTA	2005049097TR	3/21/2005		
11	0.28	WARRANTY DEED	CITY OF LAGO VISTA	V12678/P00374	4/25/1996		
12	0.28	SPECIAL WARRANTY DEED	CLARK THOMAS & WINTERS P C TRU	V12265/P1400	8/25/1994		
13	0.28	SPECIAL WARRANTY DEED	CLARK THOMAS & WINTERS P C TRU	V12265/P1400	8/25/1994		
14	0.30	SPECIAL WARRANTY DEED	CLARK THOMAS & WINTERS P C TRU	V12265/P1400	8/25/1994		
U-15A	0.34	SPECIAL WARRANTY DEED	PAISANO HOLDINGS LLC	2005172266TR	9/12/2005	TxDOT/CITY	EITHER ULT-15A OR 15B FOR TAXIWAY ACCESS TO EAST SIDE HANGAR DEVELOPMENT
U-15B	0.34	MISCELLANEOUS	JAMES NELSON QUIMBY	2006212228TR	1/1/2011	TxDOT/CITY	EITHER ULT-15A OR 15B FOR TAXIWAY ACCESS TO EAST SIDE HANGAR DEVELOPMENT
U-16	0.23	WARRANTY DEED	NRC INC	V07860/P00552		TxDOT/CITY	ACQUIRE FOR EAST SIDE DEVELOPMENT
U-17	0.23	WARRANTY DEED	MOUNT LAGO VISTA LLC	2010143807TR	9/21/2010	TxDOT/CITY	ACQUIRE FOR EAST SIDE DEVELOPMENT
U-18	0.22	WARRANTY DEED	MOUNT LAGO VISTA LLC	2006097108TR	1/1/2011	TxDOT/CITY	ACQUIRE FOR EAST SIDE DEVELOPMENT
U-19	0.22	WARRANTY DEED	EV LAND DEVELOPMENT LLC	2006062545TR	3/6/2006	TxDOT/CITY	ACQUIRE FOR EAST SIDE DEVELOPMENT
U-20	0.22	WARRANTY DEED	LV ACQUISITIONS	2010113840TR	7/29/2010	TxDOT/CITY	ACQUIRE FOR EAST SIDE DEVELOPMENT
U-21	0.22	WARRANTY DEED	STIEWERT OTIS R AND JO ANN S	V7651/P00625		TxDOT/CITY	ACQUIRE FOR EAST SIDE DEVELOPMENT
U-22	0.22	WARRANTY DEED	STIEWERT OTIS R AND JO ANN S	V7651P/00599		TxDOT/CITY	ACQUIRE FOR EAST SIDE DEVELOPMENT
U-23	0.23	CONSTABLE DEED	AUSTIN CAPITAL REAL ESTATE SERVICES LLC	2009032304TR	2/3/2009	TxDOT/CITY	ACQUIRE FOR EAST SIDE DEVELOPMENT
U-24	0.22	WARRANTY DEED	MOUNT LAGO VISTA LLC	2006097108TR	4/20/2006	TxDOT/CITY	ACQUIRE FOR EAST SIDE DEVELOPMENT
U-25	0.22	GIFT DEED	LINDA AXTELL COLTHARP TRUSTEE	2008065677TR	2/25/2008	TxDOT/CITY	ACQUIRE FOR EAST SIDE DEVELOPMENT
U-26	0.29	CONSTABLE DEED	CITY OF LAGO VISTA	2010149374TR	9/7/2010		CITY TO COORDINATE WITH TXDOT TO TRANSFER PROPERTY TO CITY AIRPORT PROPERTY
U-27	0.23	WARRANTY DEED	MOUNT LAGO VISTA LLC	2006020369TR	1/12/2006	TxDOT/CITY	ACQUIRE FOR EAST SIDE DEVELOPMENT
U-28	0.23	WARRANTY DEED	MOUNT LAGO VISTA LLC	2006020369TR	1/12/2006	TxDOT/CITY	ACQUIRE FOR EAST SIDE DEVELOPMENT
U-29	0.22	CONSTABLE DEED	TRAVIS COUNTY TRUSTEE	2009063749TR	4/7/2009	TxDOT/CITY	ACQUIRE FOR EAST SIDE DEVELOPMENT
U-30	0.22	WARRANTY DEED	LV ACQUISITIONS	2010133076TR	8/31/2010	TxDOT/CITY	ACQUIRE FOR EAST SIDE DEVELOPMENT
U-31	0.22	WARRANTY DEED	LV ACQUISITIONS	2010148067-69TR	9/29/2010	TxDOT/CITY	ACQUIRE FOR EAST SIDE DEVELOPMENT
U-32	0.22	CORRECTION DEED	PAPERWHITE INVESTMENTS LLC	2006134002TR	5/10/2006	TxDOT/CITY	ACQUIRE FOR EAST SIDE DEVELOPMENT
U-33	0.22	WARRANTY DEED	BURNIS A HALL	V07644/P00746	9/26/1981	TxDOT/CITY	ACQUIRE FOR EAST SIDE DEVELOPMENT
U-34	0.22	WARRANTY DEED	EQUITY TRUST COMPANY	2007118056TR	6/15/2007	TxDOT/CITY	ACQUIRE FOR EAST SIDE DEVELOPMENT
U-35	0.22	WARRANTY DEED	FLEET STEVENSON JR	V13009/P01404	8/27/1997	TxDOT/CITY	ACQUIRE FOR EAST SIDE DEVELOPMENT
U-36	0.22	WARRANTY DEED	NRC INC	V07643/P00336		TxDOT/CITY	ACQUIRE FOR EAST SIDE DEVELOPMENT
U-37	0.2126	WARRANTY DEED	MIGUEL & LORENZO R JAIMES	2005240117TR	7/8/2005	TxDOT/CITY	ACQUIRE FOR EAST SIDE DEVELOPMENT

PROPERTY MAP PARCEL TABLE

TRACT	ACRES	TITLE	GRANTOR	TRAVIS COUNTY RECORDS VOL./PG. OR PROP. ID	DATE	FUNDING	REMARKS
U-38	0.48	WARRANTY DEED	JAMES C AWALT	2011051584TR	4/12/2011	TxDOT/CITY	TO BE ACQUIRED BY CITY FOR 10 YEAR CIP (TERMINAL, PARKING, HANGAR)
U-39	0.72	WARRANTY DEED	ROBERT B & JACKELENE M MICHE	2000050976TR	3/27/2000	TxDOT/CITY	TO BE ACQUIRED BY CITY FOR 10 YEAR CIP (TIE-DOWNS, FUEL FARM)
U-40	0.69	WARRANTY DEED	JAMES & SUSAN AWALT	2014068651TR	5/12/2014	TxDOT/CITY	TO BE ACQUIRED BY CITY FOR 10 YEAR CIP (TIE-DOWNS)
U-41	0.22	WARRANTY DEED	TAM THY & MATTHEW PICKLIK	2012060367TR	4/13/2012	TxDOT/CITY	TO BE ACQUIRED BY CITY FOR 10 YEAR CIP (SOUTH RPZ)
U-42	0.32	SPECIAL WARRANTY DEED	ILUSA LLC	2007185443TR	7/30/2007	TxDOT/CITY	TO BE ACQUIRED BY CITY FOR 10 YEAR CIP (SOUTH RPZ)
U-43	0.21	WARRANTY DEED	EV LAND DEVELOPMENT LLC	2006062547TR	3/31/2006	TxDOT/CITY	TO BE ACQUIRED BY CITY FOR 10 YEAR CIP (SOUTH RPZ)
U-44	0.22	SPECIAL WARRANTY DEED	ILUSA LLC	2007185443TR	7/30/2007	TxDOT/CITY	TO BE ACQUIRED BY CITY FOR 10 YEAR CIP (SOUTH RPZ)
U-45	0.26	WARRANTY DEED	MOUNT LAGO VISTA LLC	2006075023TR	4/6/2006	TxDOT/CITY	TO BE ACQUIRED BY CITY FOR 10 YEAR CIP (SOUTH RPZ)
U-46	0.22	SPECIAL WARRANTY DEED	ILUSA LLC	2007185443TR	7/30/2007	TxDOT/CITY	TO BE ACQUIRED BY CITY FOR 10 YEAR CIP (SOUTH RPZ)
U-47	0.22	SPECIAL WARRANTY DEED	ILUSA LLC	2007185443TR	7/30/2007	TxDOT/CITY	TO BE ACQUIRED BY CITY FOR 10 YEAR CIP (SOUTH RPZ)
U-48	0.21	WARRANTY DEED	CHARLES F & MARY L ROBERTS	V10314/P00935	4/5/1987	TxDOT/CITY	TO BE ACQUIRED BY CITY FOR 10 YEAR CIP (SOUTH RPZ)
U-49	0.27	WARRANTY DEED	MARK H & LINDA HARRISON	V07573/P00424	7/12/1981	TxDOT/CITY	TO BE ACQUIRED BY CITY FOR 10 YEAR CIP (SOUTH RPZ)
U-50	0.24	WARRANTY DEED	THOMAS E & OPAL C DUGGER	V07611/P00547	8/28/1981	TxDOT/CITY	TO BE ACQUIRED BY CITY FOR 10 YEAR CIP (SOUTH RPZ)
U-51	0.29	WARRANTY DEED	LEWIS A THOMPSON	1999114439TR	9/28/1999	TxDOT/CITY	TO BE ACQUIRED BY CITY FOR 10 YEAR CIP (SOUTH RPZ)
U-52	0.26	MISCELLANEOUS	AWNI & HALA ALQUDSI YOUSEF	2015187902	11/6/2015	TxDOT/CITY	TO BE ACQUIRED BY CITY FOR 10 YEAR CIP (SOUTH RPZ)
U-53	0.24	WARRANTY DEED	GLENN CHAPPE	2015106744TR	7/1/2015	TxDOT/CITY	TO BE ACQUIRED BY CITY FOR 10 YEAR CIP (SOUTH RPZ)
U-54	0.33	WARRANTY DEED	DCB CENTRAL LLC	2006031699TR	2/2/2006	TxDOT/CITY	TO BE ACQUIRED BY CITY FOR 10 YEAR CIP (SOUTH RPZ)
U-55	2.83	WARRANTY DEED	CITY OF LAGO VISTA	V11876/P00264	1/29/1993	TxDOT/CITY	TO BE ACQUIRED BY CITY FOR 10 YEAR CIP (SOUTH RPZ)
U-56	0.23	WARRANTY DEED	FERNANDO III & JOYLYN ARELLANO	V10085/P00091	11/7/1986	TxDOT/CITY	TO BE ACQUIRED BY CITY FOR 10 YEAR CIP (SOUTH RPZ)
U-57	0.38	WARRANTY DEED	MOUNT LAGO VISTA LLC	2006133973TR	5/26/2006	TxDOT/CITY	TO BE ACQUIRED BY CITY FOR 10 YEAR CIP (SOUTH RPZ)
U-58	0.23	SPECIAL WARRANTY DEED	ILUSA LLC	2007185443TR	7/30/2007	TxDOT/CITY	TO BE ACQUIRED BY CITY FOR 10 YEAR CIP (SOUTH RPZ)
U-59	0.22	EXECUTER DEED	CONNIE R THILL	2011179655TR	10/27/2011	TxDOT/CITY	TO BE ACQUIRED BY CITY FOR 10 YEAR CIP (SOUTH RPZ)
U-60	0.22	WARRANTY DEED	MOUNT LAGO VISTA LLC	2007007867TR	1/5/2007	TxDOT/CITY	TO BE ACQUIRED BY CITY FOR 10 YEAR CIP (SOUTH RPZ)
U-61	0.23	WARRANTY DEED	GEORGE D & KATHRYN L BURKE	V10422/P00897	7/10/1987	TxDOT/CITY	TO BE ACQUIRED BY CITY FOR 10 YEAR CIP (SOUTH RPZ)
U-62	0.23	SPECIAL WARRANTY DEED	DEBRA K YOUNG	V11428/P00201	5/2/1991	TxDOT/CITY	TO BE ACQUIRED BY CITY FOR 10 YEAR CIP (SOUTH RPZ)
U-63	15.76	TRUSTEE DEED	RODGERS-PENN INVESTMENTS	V10382/P00741	8/12/1987	DONATION/LAND CREDIT OR ACQUISITION	TOTAL PROPERTY INCLUDES 1924.02 ACRES, THE PORTION TO BE ACQUIRED BY CITY IS FOR EXISTING AND ULTIMATE NORTH RPZ
U-64	16.70	DEED OR EASEMENT EXPANSION	UNITED STATES OF AMERICA	V11685/P00184	5/6/1992		TOTAL PROPERTY INCLUDES 584.76 ACRES. CITY TO SEEK ACQUISITION OR EXPANSION OF EXISTING RUNWAY EASEMENT
U-65	2.69	TRUSTEE DEED	RODGERS-PENN INVESTMENTS	V10382/P00741	8/12/1987	DONATION/LAND CREDIT OR ACQUISITION	TOTAL PROPERTY INCLUDES 1924.02 ACRES, THE PORTION TO BE SEEK EASEMENT BY CITY IS TO PROTECT APPROACH SURFACE

TEXAS DEPARTMENT OF TRANSPORTATION AVIATION DIVISION

ALP APPROVED ACCORDING TO FAA AC 150/5300-13A PLUS THE REQUIREMENTS OF A FAVORABLE ENVIRONMENTAL FINDING AND FAA NRA STUDY PRIOR TO THE START OF ANY LAND ACQUISITION OR CONSTRUCTION ON AIRPORT PROPERTY.

COPYRIGHT 2015 TXDOT AVIATION DIVISION, ALL RIGHTS RESERVED.

4/3/17

DAVID FULTON, DIRECTOR, AVIATION DIVISION — DATE

AIRPORT SPONSOR

CURRENT AND FUTURE DEVELOPMENT DEPICTED ON THIS ALP IS APPROVED AND SUPPORTED BY AIRPORT SPONSOR.

SPONSOR ACKNOWLEDGES APPROVAL OF ALP BY TXDOT DOES NOT CONSTITUTE A COMMITMENT TO FUNDING.

David Harrell — 3-31-2017

NAME — DATE

Development Services Director

TITLE, AIRPORT SPONSOR'S REPRESENTATIVE

PREPARED BY:

PSC PARKHILLSMITH&COOPER

DM — FEB 2017
DESIGNED BY — DATE

DM — FEB 2017
DRAWN BY — DATE

AIRPORT PROPERTY MAP
LAGO VISTA – RUSTY ALLEN AIRPORT
LAGO VISTA, TEXAS (RYW)

Texas Department of Transportation
Aviation Div

SHEET 3 OF

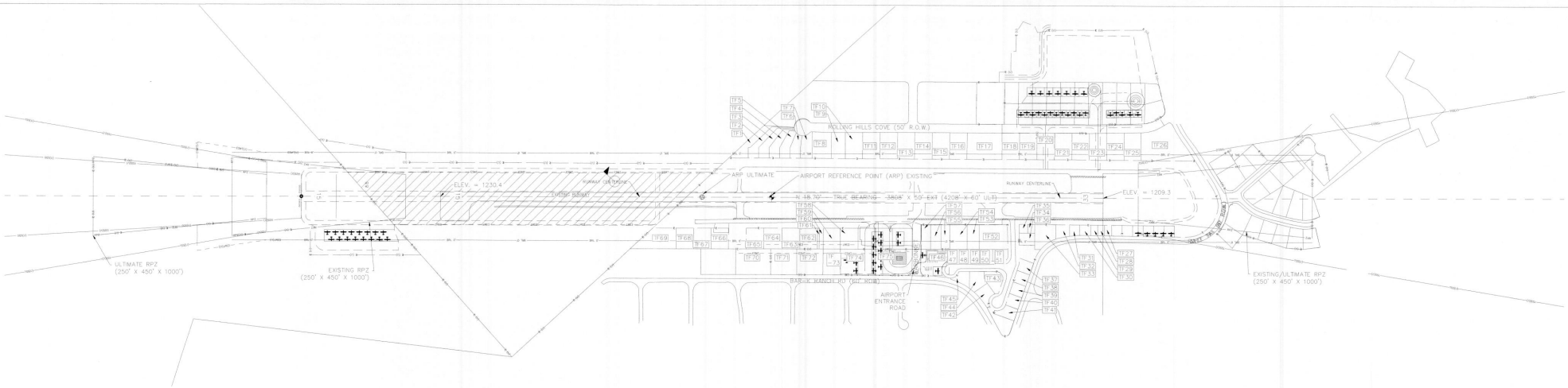

THROUGH-THE-FENCE (TTF) PARCEL TABLE WITH ACCESS THROUGH RAAPOA AGREEMENT

TRACT	ACRES	TITLE	OWNER	TRAVIS COUNTY RECORDS VOL./PG. OR PROP. ID	DATE	FUNDING	REMARKS
TF-1	0.28	QUIT CLAIM DEED	CAWJ LLC	2016013472.0000	12/1/2014		
TF-2	0.21	WARRANTY DEED	DAVID L BOTTOM	2002110940TR	6/12/2002		
TF-3	0.22	WARRANTY DEED	THOMAS A ROSENBERGER	2002092353TR	5/14/2002		
TF-4	0.21	WARRANTY DEED	RUSSEL & WENDY ORMS	2015124487.0000	8/3/2015		
TF-5	0.20	WARRANTY DEED	FULTON TRUST	2014022621R	5/16/2014		
TF-6	0.16	WARRANTY DEED	TRUST THE TULLY	2002026025TR	2/7/2002		
TF-7	0.20		ROD RODRIGUEZ	524543.0000			
TF-8	0.38		HERSCHEL JAMES WOOD JR	718818.0000			
TF-9	0.28	WARRANTY DEED	ROBERT P SMITH	2014188950TR	12/19/2014		
TF-10	0.34	WARRANTY DEED	GEORGE R EEDS	1999155870TR	12/13/1999		
TF-11	0.34	WARRANTY DEED	FREDRICK BERNHARDT JR	2005158639TR	8/18/2005		
TF-12	0.34	WARRANTY DEED	JAMES D & REBECCA M SMITH	2012185273TR	10/29/2012		
TF-13	0.34	WARRANTY DEED	RAYMOND J & KIMBERLY DIANE CHATELAIN	2016094252.0000	6/7/2016		
TF-14	0.34	WARRANTY DEED	CAPITOL LAND & LIVESTOCK TRUCKS INC	2010954957R	7/1/2010		
TF-15	0.34	WARRANTY DEED	SHARON A WARD	2016010123.0000	1/22/2016		
TF-16	0.34	WARRANTY DEED	KRIS P & SUSAN G DEHNEL	1999054882TR	6/23/1999		
TF-17	0.69	SPECIAL WARRANTY DEED	BRIAN BRIDGES ENTERPRISES INC	2015100118TR	6/24/2015		
TF-18	0.34	WARRANTY DEED	PATRICIA OREILLY DECKARD	V12960/P01167	6/19/1997		
TF-19	0.34	SPECIAL WARRANTY DEED	PAISANO HOLDINGS LLC	2005172266TR	9/12/2005		
TF-20	0.34	SPECIAL WARRANTY DEED	PAISANO HOLDINGS LLC	2005172266TR	9/12/2005		ULT-15A ALTERNATE TO ACQUIRE IN 10 YEAR CIP (EAST SIDE DEVELOPMENT ACCESS TAXIWAY)
TF-21	0.34	WARRANTY DEED	ELFAITH M ERWA	2006049622TR	3/9/2006		
TF-22	0.34	SPECIAL WARRANTY DEED	LOWELL A LEMAY	V12313/P01252	11/2/1994		
TF-23	0.34	MISCELLANEOUS	JAMES NELSON QUIMBY	2006212228TR	1/1/2011		ULT-15B ALTERNATE TO ACQUIRE IN 10 YEAR CIP (EAST SIDE DEVELOPMENT ACCESS TAXIWAY)
TF-24	0.34	WARRANTY DEED	STC EQUITY LLC	2013177517TR	9/25/2013		
TF-25	0.34	LIVING TRUST	WILLIAM M COLTHARP	2005010719TR	11/24/2004		
TF-26	1.06	WARRANTY DEED	JAMES C AWALT	2016017166.0000	2/5/2016		
TF-27	0.08	WARRANTY DEED	MICHAEL J MILLER	2008094933TR	4/17/2008		
TF-28	0.06	WARRANTY DEED	W LEO & MARGARET A SLATON	V13173/P00923	4/28/1998		
TF-29	0.11		JAMES C AWALT	785785.0000			
TF-30	0.08	WARRANTY DEED	RICHARD F & JILL C PIASECKI	2008053455TR	2/7/2008		
TF-31	0.08	WARRANTY DEED	JAMES R MOSS	2013121843TR	7/1/2013		
TF-32	0.12	WARRANTY DEED	GLENN DEITIKER	2009042312TR	3/13/2009		
TF-33	0.29		GLENN DEITIKER	796541.0000			
TF-34	0.04		ANNE ALEXANDER RUSSEL	2012077885STR	4/7/2012		
TF-35	0.05	WARRANTY DEED	TRI-DELAT DESIGN LLC	2003193035TR	8/15/2003		
TF-36	0.14	WARRANTY DEED	JAMES C AWALT	2012059190TR	4/13/2012		
TF-37	0.12	WARRANTY DEED	JAMES C AWALT	2011051584TR	4/12/2011		
TF-38	0.12	WARRANTY DEED	MONTECHINO DEVELOPMENT LP	2008061720TR	4/14/2008		
TF-39	0.12	WARRANTY DEED	MICHAEL LEBLANC	2006051081TR	3/20/2006		
TF-40	0.12	WARRANTY DEED	PLAINSMAN ENTERPRISES INC	2007210704TR	11/16/2007		

THROUGH-THE-FENCE (TTF) PARCEL TABLE WITH ACCESS THROUGH RAAPOA AGREEMENT

TRACT	ACRES	TITLE	OWNER	TRAVIS COUNTY RECORDS VOL./PG. OR PROP. ID	DATE	FUNDING	REMARKS
TF-41	0.16	WARRANTY DEED	KILYONG K & PAUL J JR NATHO	2005054276TR	3/1/2005		
TF-42	0.17	WARRANTY DEED	DANIEL JAMES HICKOX	2011158323TR	10/28/2011		
TF-43	0.21	WARRANTY DEED	DANIEL JAMES HICKOX	2011158323TR	10/28/2011		
TF-44	0.21	WARRANTY DEED	SG L 3C & D LLC	2015190363.0000	12/1/2015		
TF-45	0.13	WARRANTY DEED	DAVID ANTHONY WEISENBERGER	2010088660TR	6/21/2010		
TF-46	0.48	WARRANTY DEED	JAMES C AWALT	2011051584TR	4/12/2011		TO BE ACQUIRED BY CITY FOR 10 YEAR CIP (TERMINAL, PARKING, HANGAR)
TF-47	0.10	WARRANTY DEED	DAVID EDWARD	2008008998TR	1/17/2008		
TF-48	0.10	WARRANTY DEED	JAMES A & JOAN L PECK	2013191228TR	10/14/2013		
TF-49	0.10	WARRANTY DEED	JAMES A & JOAN L PECK	2013192784TR	10/21/2013		
TF-50	0.10	WARRANTY DEED	THE BUSH FAMILY TRUST	2007001131TR	12/29/2006		
TF-51	0.12	WARRANTY DEED	CARL A & THOMAS N SKILES	2013073699TR	4/19/2013		
TF-52	0.32	SPECIAL WARRANTY DEED	ROBERT J GLORIS	V11599/P00266	1/10/1992		
TF-53	0.22	SPECIAL WARRANTY DEED	WICKHAM HOLDING COMPANY	V12193/P01673	5/16/1994		
TF-54	0.32	WARRANTY DEED	LV FLIGHTLINE LLC	184756.0000	5/8/2015		
TF-55	0.16	WARRANTY DEED	CARMEN PATRICIA RODRIGUEZ	2014099080TR	6/26/2014		
TF-56	0.19	WARRANTY DEED	ROBERT B & JECKELENE M	2004036999TR	2/27/2004		
TF-57	0.18	WARRANTY DEED	STUART C MILLSAPPS	2010023109TR	12/30/2009		
TF-58	0.28	WARRANTY DEED	WOMBLE FAMILY TRUST	2013171569TR	9/13/2013		
TF-59	0.28	WARRANTY DEED	MILLER AIRCRAFT SERVICES	V13317/P02931	11/8/1998		
TF-60	0.06	WARRANTY DEED	RUSSEL L ALLEN REVOCABLE LIVING TRUST	2011174287TR	11/16/2011		
TF-61	0.03	MISCELLANEOUS	ELLIS CONSTANCE	186164.0000	11/6/2015		
TF-62	0.28	WARRANTY DEED	RUSSEL L ALLEN REVOCABLE LIVING TRUST	2011174286TR	11/16/2011		
TF-63	0.28	SPECIAL WARRANTY DEED	JEFF SAVAGE	2015083567TR	5/12/2015		
TF-64	0.30	WARRANTY DEED	JERRY W TRAVIS	V09164/P00769	5/6/1985		
TF-65	0.28	WARRANTY DEED	ALGER COMPANY	V12319/P00916	11/10/1994		
TF-66	0.28	WARRANTY DEED	MICHAEL JOSEPH & LISA MARIE SCHAFER	2006032225TR	2/22/2006		
TF-67	0.28	WARRANTY DEED	STEPHEN & CLAUDETTE COLWELL	2006242461TR	12/14/2006		
TF-68	0.28	WARRANTY DEED	KNL ENERGY LLC	2014026186TR	2/21/2014		
TF-69	0.54	WARRANTY DEED	GLENN R CHIAPPE	2013185158TR	10/4/2013		
TF-70	0.69	WARRANTY DEED	ROBERT L WRIGHT	2000000467TR	12/21/1999		LONG RANGE PLAN (10+ YRS) ACQUISITION
TF-71	0.52	WARRANTY DEED	ALTON O MOORE III	2014119695TR	8/7/2014		LONG RANGE PLAN (10+ YRS) ACQUISITION
TF-72	0.52	WARRANTY DEED	ROBERT & BRUCE MICHIE	V13399/P00258	3/26/1999		LONG RANGE PLAN (10+ YRS) ACQUISITION
TF-73	0.34	WARRANTY DEED	KENNETH & SANA HENDERSON	2009147880TR	8/28/2009		LONG RANGE PLAN (10+ YRS) ACQUISITION
TF-74	0.69	WARRANTY DEED	JAMES & SUSAN AWALT	2014068651TR	5/12/2014		TO BE ACQUIRED BY CITY FOR 10 YEAR CIP (TIE-DOWNS)
TF-75	0.72	WARRANTY DEED	ROBERT B & JACKELENE M MICHIE	2000050976TR	3/27/2000		TO BE ACQUIRED BY CITY FOR 10 YEAR CIP (TIE-DOWNS, FUEL FARM)

MAGNETIC DECLINATION 4°4' E
CHANGING 0°7' W/YEAR

0' 300' 600'
1" = 300'

ALD LEGEND

FEATURE	EXISTING	ULTIMATE
RUNWAY/TAXIWAY OUTLINE		
RUNWAY/TAXIWAY TO BE REMOVED		
BUILDINGS/FACILITIES		
AIRPORT PROPERTY LINE		
AIRPORT PROPERTY LINE w/FENCE		
FENCE LINE		
BUILDING RESTRICTION LINE (BRL)		BRL 0'
AIRPORT REFERENCE POINT		
WIND CONE & SEGMENTED CIRCLE		
THRESHOLD LIGHTS		
RW END IDENTIFIER LIGHTS (REILS)		
C&G BEACON		
VGSI		
HOLD POSITION AND SIGN		
ASOS/AWOS		
PACS AND SACS MARKERS		
GROUND CONTOURS	400'	
SIGNIFICANT OBJECT LOCATION		
TREES/BRUSH		
CITY LIMIT LINE	CITY	

TEXAS DEPARTMENT OF TRANSPORTATION
AVIATION DIVISION

ALP APPROVED ACCORDING TO FAA AC 150/5300-13A PLUS THE REQUIREMENTS OF A FAVORABLE ENVIRONMENTAL FINDING AND FAA NRA STUDY PRIOR TO THE START OF ANY LAND ACQUISITION OR CONSTRUCTION ON AIRPORT PROPERTY.

COPYRIGHT 2015 TXDOT AVIATION DIVISION, ALL RIGHTS RESERVED.

4/3/18
DAVID FULTON, DIRECTOR, AVIATION DIVISION — DATE

AIRPORT SPONSOR

CURRENT AND FUTURE DEVELOPMENT DEPICTED ON THIS ALP IS APPROVED AND SUPPORTED BY AIRPORT SPONSOR.

SPONSOR ACKNOWLEDGES APPROVAL OF ALP BY TXDOT DOES NOT CONSTITUTE A COMMITMENT TO FUNDING.

David Harrell 3-31-2017
SIGNATURE — DATE
DEVELOPMENT SERVICES DIRECTOR
TITLE, AIRPORT SPONSOR'S REPRESENTATIVE

PREPARED BY:
PSC PARKHILLSMITH&COOPER

DM FEB 2017
DESIGNED BY — DATE

DM FEB 2017
DRAWN BY — DATE

AIRPORT TTF PROPERTY MAP
LAGO VISTA – RUSTY ALLEN AIRPORT
LAGO VISTA, TEXAS (RYW)

Texas Department of Transp
Aviation Di

SHEET 4 OF

Lago Vista Airport
AWOS Replacement
Legend
AWOS Replacement
33
289
500 ft
Google Earth

AGREEMENT
BETWEEN
OWNER AND CONTRACTOR

STATE OF TEXAS §
COUNTY OF TRAVIS §

KNOW ALL MEN BY THESE PRESENTS

This Agreement is made by and between the City of Lago Vista, hereinafter called "Owner", and CONTRACTOR NAME and contractor's executors, administrators, heirs, successors or assigns hereinafter called "Contractor".

The Owner desires to enter into a contract for airport improvement as is more fully described in the Contract Documents and Plans & Specifications in accordance with the provisions of the state statutes.

The Contractor has been engaged in and now does such work and represents that Contractor is fully equipped, competent, and capable of performing the desired and herein outlined work and is ready and willing to perform such work in accordance with the Contract Documents.

The Owner and the Contractor for and in consideration of the mutual covenants set forth, agree as follows:

WORK
Contractor shall furnish all the materials, supplies, tools, equipment, labor and other services necessary for the construction and completion of the work indicated in the Contract Documents.

The Project and general work is described as follows:
Replace and install an Automated Weather Observation System III with Present Weather Sensor, Thunder Strike Alert (AWOS III PT) to replace in the existing location. The system shall be installed in accordance with this specification and as approved in Federal Aviation Administration Advisory Circular 150/5220-16, latest version, and FAA Order 6560-20B, or latest version.

HUB REQUIREMENT
HUB participation goal in Historically Underutilized Business Contract Provisions, as found in the General Construction Contract Provisions, is set at **0%** for this contract.

CONTRACT TIME
The CONTRACTOR will commence the work required by the Contract Documents on the date indicated on the Notice to Proceed and will complete the work within 90 calendar days, excluding FAA review time, unless the period for completion is extended in accordance with the Contract Documents. If the Contractor does not complete the work within the specified time, the CONTRACTOR agrees to pay as liquidated damages the sum of **$200.00**, for each calendar day thereafter until the work is completed in accordance with the Contract Documents.

CONTRACT PRICE
The CONTRACTOR agrees to perform all the work described in the Contract Documents not to exceed the sum of **$XXXXXXXX.XX** (), as described in the proposal as(**EXAMPLE**: base bid and alternates etc.)

CONTRACT DOCUMENTS
The term Contract Documents means and includes the following which are incorporated herein by reference as if fully reproduced:

A. Proposal
B. Agreement Between Owner and Contractor
C. Performance Bond
D. Payment Bond
E. Technical Specifications
F Wage Rates
G. Addenda (if any)
H. General Construction Contract Provisions, Volume dated February 2013 (Available at TxDOT, Aviation Division, 6230 E. Stassney Lane, 2nd Floor, Austin, Texas 78744; Use latest version of referenced Advisory Circulars.)

PAYMENT
The OWNER will pay the CONTRACTOR in the manner and at such times and in such amounts as required by Aviation Construction General Provision, Section 90 and the contract documents.

The CONTRACTOR expressly warrants that no third person has been employed to solicit or obtain this contract in Contractor's behalf, or to cause or procure the same to be obtained upon compensation in any way contingent, in whole or in part, upon such procurement, or in compensation for services in connection therewith, any brokerage commission or percentage upon the amount receivable by Contractor hereunder, and that Contractor has not in estimating the contract price demanded, included any sum by reason of any such brokerage, commission or percentage; and that all monies payable to Contractor hereunder are free from all obligations of any other person for services rendered, or supposed to have been rendered, in the procurement of this contract. Contractor further agrees that any breach of this warranty shall constitute adequate cause for the annulment of this contract or for the deduction from any sums due or to become due thereunder an amount equal to any brokerage, commission or percentage so paid or agreed to be paid or both.

It is acknowledged and agreed by the parties hereto that this contract is the full and complete contract for the construction of the work called for and described herein.

The Contractor hereby certifies that all franchise taxes are paid and in good standing or that Contractor is not subject to franchise taxes.

This Agreement shall be binding upon all parties hereto and their respective heirs, executors, administrators, successors, and assigns.

IN WITNESS WHEREOF, the parties hereto have executed, or caused to be executed by their duly authorized officials this agreement in duplicate, each of which shall be deemed an original on the date first written above.

CONTRACTOR

Name:_____ _____
Contractor (Print Name) Title

_____

_____
_____
Signature of Contractor Date

_____
Address: Phone Number:_____
_____

_____ Fax Number:_____

Acceptance by the Owner:

By:_____ Date:_____

DATE

NAME OF CONTRACTOR

Dear Mr/Ms. CONTRACTOR:

Effective DATE OF PRE-CON OR OTHER DATE, VENDOR is authorized to begin work on the siting and installation (or replacement of existing AWOS) of an AWOS III P/T at the Rusty Allen Airport Lago Vista, TX.

The time allowed for completion of the project is 90 consecutive calendar days not including TxDOT, FAA and FCC review time.

Please acknowledge receipt of this notice by signing below and returning two originals.

Please do not hesitate to call if you have any questions.

Sincerely,_____

City of Lago Vista
Charles West
City Manager

Accepted: _____

By: _____

Name:_____

Title:_____

Date:_____

Texas Department of Transportation
AVIATION DIVISION

CONSTRUCTION CONTRACT GENERAL PROVISIONS

VOLUME
FEBRUARY 2013

This Page Intentionally Left Blank

Texas Department of Transportation
Aviation Division
125 E. 11th Street
Austin, TX 78701-2483
1-800/68-PILOT (74568)

To obtain a copy of the General Provisions, Go to TxDOT's Web page, http://www.txdot.gov/inside-txdot/division/aviation/projects.html

This Page Intentionally Left Blank

AVIATION CONSTRUCTION CONTRACT GENERAL PROVISIONS

Table of Contents

Wage, Labor, EEO Safety and General Requirements
(Applicable to Federal and State Projects)

Section A	Wage Labor EEO Safety Requirements
Section B	Davis Bacon Act Requirements
Section C	Contract Work Hours & Safety Standards
Section D	Equal Employment Opportunity
Section E	Clean Air & Water Pollution Control Requirements
Section F	Standard Federal EEO Construction Contract Spec.
Section G	Contractual Requirements Pursuant to Civil Rights Act of 1964, Title VI
Section H	Termination of Contract
Section I	Buy American – Steel and Manufactured Products for Construction Contracts

General Provisions

Section 10	Definitions of Terms
Section 20	Bid Requirements and Conditions
Section 30	Award and Execution of Contract
Section 40	Scope of Work
Section 50	Control of Work
Section 60	Control of Materials
Section 70	Legal Regulations and Responsibility to Public
Section 80	Prosecution and Progress
Section 90	Measurement and Payment
Section 100	Contractor Quality Control Program
Section 110	Methods of Estimating Percentage of Material Within Specifications Limits (PWL)
Section 120	Nuclear Gages

FAA Advisory Circular	150/5370-2F, Operational Safety on Airports during Construction or most current version

This Page Intentionally Left Blank

Wage, Labor, EEO Safety and
General Requirements
(Applicable to Federal and State Projects)

This Page Intentionally Left Blank

WAGE LABOR, EEO, SAFETY AND GENERAL REQUIREMENTS

SECTION A

(Federal Aviation Administration (FAA) Requirements)

A-1 Airport and Airway Improvement Program Project

The work in each Department of Transportation, Aviation Division contract which is being undertaken and accomplished by the Sponsor in accordance with the terms and condition of a grant agreement between the Sponsor and the United States, under the Airport and Airway Improvement Act of 1982 (P.L. 97-248) as amended by the Airport and Airway Safety and Capacity Expansion Act of 1987 (P.L. 100-223) and Part 152 of the Federal Aviation Regulations (14 CFR Part 152), pursuant to which the United States has agreed to pay a certain percentage of the costs under those Acts. The United States is not a party to this contract and no reference in this contract to the FAA or any representative thereof, or the United States, by the Contract, makes the United States a party to this contract.

A-2 Consent to Assignment

The contractor shall obtain the prior written consent of the Sponsor to any proposed assignment of any interest in or part of this contract.

A-3 Convict Labor.

No convict labor may be employed under this contract.

A-4 Veterans Preference.

In the employment of labor (except in executive, administrative, and supervisory positions), preference shall be given to Veterans of the Vietnam era and disabled veterans as defined in Section 515(c)(1) and (2) of the Airport and Airway Improvement Act of 1982. However, this preference shall apply only where the individuals are available and qualified to perform the work to which the employment relates

A-5 Withholding Sponsor from Contractor

Whether or not payments or advance to the Sponsor are withheld or suspended by the FAA, the Sponsor may withhold or cause to be withheld from the contractor so much of the accrued payments or advances as may be considered necessary to pay laborers and mechanics employed by the contractor or any subcontractor on the work, the full amount of wages required by this contract.

A-6 Nonpayment of Wages.

If the contractor or subcontractor fails to pay any laborer or mechanic employed or working on the site of the work any of the wages required by this contract, the Sponsor may, after written notice to the contractor, take such action as may be necessary to cause the suspension of any further payment or advance of funds until the violations cease.

A-7 FAA Inspection and Review

The contractor shall allow any authorized representative or the FAA to inspect and review any work or materials used in the performance of this contract.

A-8 Subcontracts

The contractor shall insert in each of his subcontracts the provisions contained in paragraphs A-1, A-3, A-4, A-5, A-6, and A-7 requiring the subcontractors to include these provisions in any lower tier subcontracts which they may enter into, together with a clause requiring this insertion in any further subcontracts that may in turn be made.

A-9 Contract termination.

Any violation or breach of terms of this contract on the part of the contractor or their subcontractors may result in the suspension or termination of this contract or such other action that may be necessary to enforce the rights of the parties of this agreement. The duties and obligations imposed by the Contract Documents and the rights and remedies available thereunder shall be in addition to and not a limitation of any duties, obligations, rights and remedies otherwise imposed or available by law. (49 CFR Part 18).

The failure to suspend, terminate, or take any other action to enforce the rights of the Texas Department of Transportation or of the Sponsor will not constitute a waiver of said right to suspend, terminate, or take any other action to enforce the rights of the Texas Department of Transportation or of the Sponsor.

A-10 Inspection of Records

The Contractor shall maintain an acceptable cost accounting system. The Contractor agrees to provide the Sponsor, the Federal Aviation Administration and the Comptroller General of the United States or any of their duly authorized representatives' access to any books, documents, papers, and records of the contractor which are directly pertinent to the specific contract for the purpose of making audit, examination, excerpts and transcriptions. The Contractor agrees to maintain all books, records and reports required under this contract for a period of not less than three years after final payment is made and all pending matters are closed. (49 CFR Part 18).

A-11 Rights to Inventions.

All rights to inventions and materials generated under this contract are subject to regulations issued by the FAA and the Sponsor of the Federal grant under which this contract is executed. (49 CFR Part 18).

A-12 General Civil Rights Provisions.

The contractor assures that it will comply with pertinent statutes, Executive orders and such rules as are promulgated to assure that no person shall, on the grounds of race, creed, color, national origin, sex, age, or handicap be excluded from participating in any activity conducted with or benefiting from Federal assistance. This provision obligates the tenant/concessionaire/lessee or its transferee for the period during which Federal assistance is extended to the airport a program, except where Federal assistance is to provide, or is in the form of personal property or real property or interest therein or structures or improvements thereon. In these cases the provision obligates the party or any transferee for the longer of the following periods: (a) the period during which the property is used by the airport sponsor or any transferee for a purpose for which Federal assistance is extended, or for another purpose involving the provision of similar services or benefits or (b) the period during which the airport sponsor or any transferee retains ownership or possession of the property. In the case of contractors, this provision binds the contractors from the bid solicitation period through the completion of the contract. This provision is in addition to that required of Title VI of the Civil Rights Act of 1964. This provision binds the contractor from the bid solicitation period through the completion of the contract. (Section 520, Airport and Airway Improvement Act of 1982.)

A-13 LOBBYING AND INFLUENCING FEDERAL EMPLOYEES

(1) No Federal appropriated funds shall be paid, by or on behalf of the contractor, to any person for influencing or attempting to influence an officer or employee of any agency, a Member of Congress, an officer or employee of Congress, or an employee of a Member of Congress in connection with the making of any Federal grant and the amendment or modification of any Federal grant.

(2) If any funds other than Federal appropriated funds have been paid or will be paid to any person for influencing or attempting to influence an officer or employee of any agency, a Member of Congress, an officer or employee of Congress, or an employee of a Member of Congress in connection with any Federal grant, the contractor shall complete and submit Standard Form-LLL, “Disclosure of Lobby Activities,” in accordance with its instructions.

A-14 ENERGY CONSERVATION REQUIREMENTS

The contractor agrees to comply with mandatory standards and policies relating to energy efficiency that are contained in the state energy conservation plan issued in compliance with the Energy Policy and Conservation Act (Public Law 94-163)

This Page Intentionally Left Blank

SECTION B

Federal Aviation Administration (FAA) and TxDOT Requirements

DAVIS BACON ACT REQUIREMENTS and TEXAS FAIR WAGE REQUIREMENT ACT

(29 CFR PART 5)
Updated 2/14/2012

TGC 2258
43 TAC 9.5

B-1. Minimum Wages

(i) All laborers and mechanics employed or working upon the site of the work will be paid unconditionally and not less often than once a week, and without subsequent deduction or rebate on any account (except such payroll deductions as are permitted by the Secretary of Labor under the Copeland Act (29 CFR Part 3)), the full amount of wages and bona fide fringe benefits (or cash equivalent thereof) due at time of payment computed at rates not less than those contained in the wage determination of the Secretary of Labor which is attached hereto and made a part hereof, regardless of any contractual relationship which may be alleged to exist between the contractor and such laborers and mechanics.

Contributions made or costs reasonably anticipated for bona fide fringe benefits under section 1(b)(2) of the Davis-Bacon Act on behalf of laborers or mechanics are considered wages paid to such laborers or mechanics, subject to the provisions of paragraph (1)(iv) of this section; also, regular contributions made or costs incurred for more than a weekly period (but not less often than quarterly) under plans, funds, or programs which cover the particular weekly period, are deemed to be constructively made or incurred during such weekly period. Such laborers and mechanics shall be paid the appropriate wage rate and fringe benefits on the wage determination for the classification of work actually performed, without regard to skill, except as provided in 29 CFR Part 5.5(a)(4). Laborers or mechanics performing work in more than one classification may be compensated at the rate specified for each classification for the time actually worked therein: *Provided*, That the employer's payroll records accurately set forth the time spent in each classification in which work is performed. The wage determination (including any additional classification and wage rates conformed under (1)(ii) of this section) and the Davis-Bacon poster (WH-1321) shall be posted at all times by the contractor and its subcontractors at the site of the work in a prominent and accessible place where it can easily be seen by the workers.

(ii) (A) The contracting officer shall require that any class of laborers or mechanics, including helpers, which is not listed in the wage determination and which is to be employed under the contract shall be classified in conformance with the wage determination. The contracting officer shall approve an additional classification and

wage rate and fringe benefits therefore only when the following criteria have been met:

(1) The work to be performed by the classification requested is not performed by a classification in the wage determination; and

(2) The classification is utilized in the area by the construction industry; and

(3) The proposed wage rate, including any bona fide fringe benefits, bears a reasonable relationship to the wage rates contained in the wage determination.

(B) If the contractor and the laborers and mechanics to be employed in the classification (if known), or their representatives, and the contracting officer agree on the classification and wage rate (including the amount designated for fringe benefits where appropriate), a report of the action taken shall be sent by the contracting officer to the Administrator of the Wage and Hour Division, Employment Standards Administration, U.S. Department of Labor, Washington, D.C. 20210. The Administrator, or an authorized representative, will approve, modify, or disapprove every additional classification action within 30 days of receipt and so advise the contracting officer or will notify the contracting officer within the 30-day period that additional time is necessary.

(C) In the event the contractor, the laborers or mechanics to be employed in the classification or their representatives, and the contracting officer do not agree on the proposed classification and wage rate (including the amount designated for fringe benefits where appropriate), the contracting officer shall refer the questions, including the views of all interested parties and the recommendation of the contracting officer, to the Administrator for determination. The Administrator, or an authorized representative, will issue a determination within 30 days of receipt and so advise the contracting officer or will notify the contracting officer within the 30-day period that additional time is necessary.

(D) The wage rate (including fringe benefits where appropriate) determined pursuant to subparagraphs (1)(ii) (B) or (C) of this paragraph, shall be paid to all workers performing work in the classification under this contract from the first day on which work is performed in the classification.

(iii) Whenever the minimum wage rate prescribed in the contract for a class of laborers or mechanics includes a fringe benefit which is not expressed as an hourly rate, the contractor shall either pay the benefit as stated in the wage determination or shall pay another bona fide fringe benefit or an hourly cash equivalent thereof.

(iv) If the contractor does not make payments to a trustee or other third person, the contractor may consider as part of the wages of any laborer or mechanic the amount of any costs reasonably anticipated in providing bona fide fringe benefits under a plan or program, *Provided*, That the Secretary of Labor has found, upon the written request of the contractor, that the applicable standards of the Davis-Bacon Act have

been met. The Secretary of Labor may require the contractor to set aside in a separate account assets for the meeting of obligations under the plan or program.

B-2 Withholding.

The Federal Aviation Administration or the Sponsor shall upon its own action or upon written request of an authorized representative of the Department of Labor withhold or cause to be withheld from the contractor under this contract or any other Federal contract with the same prime contractor, or any other Federally-assisted contract subject to Davis-Bacon prevailing wage requirements, which is held by the same prime contractor, so much of the accrued payments or advances as may be considered necessary to pay laborers and mechanics, including apprentices, trainees, and helpers, employed by the contractor or any subcontractor the full amount of wages required by the contract. In the event of failure to pay any laborer or mechanic, including any apprentice, trainee, or helper, employed or working on the site of work, all or part of the wages required by the contract, the Federal Aviation Administration may, after written notice to the contractor, sponsor, applicant, or owner, take such action as may be necessary to cause the suspension of any further payment, advance, or guarantee of funds until such violations have ceased.

B-3. Payrolls and Basic Records.

(i) Payrolls and basic records relating thereto shall be maintained by the contractor during the course of the work and preserved for a period of three years thereafter for all laborers and mechanics working at the site of the work. Such records shall contain the name, address, and social security number of each such worker, his or her correct classification, hourly rates of wages paid (including rates of contributions or costs anticipated for bona fide fringe benefits or cash equivalents thereof of the types described in 1(b)(2)(B) of the Davis-Bacon Act), daily and weekly number of hours worked, deductions made and actual wages paid. Whenever the Secretary of Labor has found under 29 CFR 5.5(a)(1)(iv) that the wages of any laborer or mechanic include the amount of any costs reasonably anticipated in providing benefits under a plan or program described in section 1(b)(2)(B) of the Davis-Bacon Act, the contractor shall maintain records which show that the commitment to provide such benefits is enforceable, that the plan or program is financially responsible, and that the plan or program has been communicated in writing to the laborers or mechanics affected, and records which show the costs anticipated or the actual costs incurred in providing such benefits. Contractors employing apprentices or trainees under approved programs shall maintain written evidence of the registration of apprenticeship programs and certification of trainee programs, the registration of the apprentices and trainees, and the ratios and wage rates prescribed in the applicable programs.

(ii) (A) The contractor shall submit weekly for each week in which any contract work is performed a copy of all payrolls to the (write in name of appropriate federal agency) if the agency is a party to the contract, but if the agency is not such a party, the contractor will submit the payrolls to the applicant, sponsor, or owner, as the case may be, for transmission to the (write in name of agency). The payrolls submitted shall set out accurately and completely all of the information required to be maintained under 29 CFR 5.5(a)(3)(i), except that full social security numbers and home addresses shall not be included on weekly transmittals. Instead the payrolls

shall only need to include an individually identifying number for each employee (*e.g.,* the last four digits of the employee's social security number). The required weekly payroll information may be submitted in any form desired. Optional Form WH–347 is available for this purpose from the Wage and Hour Division Web site at *http://www.dol.gov/esa/whd/forms/wh347instr.htm* or its successor site. The prime contractor is responsible for the submission of copies of payrolls by all subcontractors. Contractors and subcontractors shall maintain the full social security number and current address of each covered worker, and shall provide them upon request to the (write in name of appropriate federal agency) if the agency is a party to the contract, but if the agency is not such a party, the contractor will submit them to the applicant, sponsor, or owner, as the case may be, for transmission to the (write in name of agency), the contractor, or the Wage and Hour Division of the Department of Labor for purposes of an investigation or audit of compliance with prevailing wage requirements. It is not a violation of this section for a prime contractor to require a subcontractor to provide addresses and social security numbers to the prime contractor for its own records, without weekly submission to the sponsoring government agency (or the applicant, sponsor, or owner).

(B) Each payroll submitted shall be accompanied by a "Statement of Compliance," signed by the contractor or subcontractor or his or her agent who pays or supervises the payment of the persons employed under the contract and shall certify the following:

(1) That the payroll for the payroll period contains the information required to be provided under § 5.5(a)(3)(ii) of Regulations, 29 CFR part 5, the appropriate information is being maintained under § 5.5 (a)(3)(i) of Regulations, 29 CFR part 5, and that such information is correct and complete;

(2) That each laborer and mechanic (including each helper, apprentice and trainee) employed on the contract during the payroll period has been paid the full weekly wages earned, without rebate, either directly or indirectly, and that no deductions have been made either directly or indirectly from the full wages earned, other than permissible deductions as set forth in Regulations 29 CFR Part 3;

(3) That each laborer or mechanic has been paid not less than the applicable wage rates and fringe benefits or cash equivalents for the classification of work performed, as specified in the applicable wage determination incorporated into the contract.

(C) The weekly submission of a properly executed certification set forth on the reverse side of Optional Form WH-347 shall satisfy the requirement for submission of the "Statement of Compliance" required by paragraph (3)(ii)(B) of this section.

(D) The falsification of any of the above certifications may subject the contractor or subcontractor to civil or criminal prosecution under Section 1001 of Title 18 and Section 231 of Title 31 of the United States Code.

(iii) The contractor or subcontractor shall make the records required under paragraph (3)(i) of this section available for inspection, copying or transcription by authorized representatives of the Sponsor, the Federal Aviation Administration or the Department of Labor, and shall permit such representatives to interview employees during working hours on the job. If the contractor or subcontractor fails to submit the required records or to make them available, the Federal agency may, after written notice to the contractor, sponsor, applicant or owner, take such action as may be necessary to cause the suspension of any further payment, advance, or guarantee of funds. Furthermore, failure to submit the required records upon request or to make such records available may be grounds for debarment action pursuant to 29 CFR 5.12.

(E) Records and inspections for all projects.

(1) The contractor and all subcontractors shall keep, or cause to be kept, copies of weekly payrolls for review by the department. Payroll records should show the name, occupation, number of hours worked each day, and per diem wages paid each worker together with a complete record of all deductions made from those wages. Only deductions made in accordance with the regulations issued by the United States Department of Labor (29 Code of Federal Regulations Part 3) are permitted. The initial payroll for each worker shall also indicate the employee's address and phone number.

(2) The contractor and subcontractor shall attach an affidavit to each payroll record certifying that the payroll is an accurate report of the full wages due and paid to each worker employed by the contractor and/or subcontractor. The contractor is required to submit weekly payroll reports to TxDOT Aviation Division.

(3) The contractor and subcontractor shall keep originals or copies of canceled payroll checks issued for each payroll record. These canceled checks shall be provided to the department upon request.

(4) All payroll records and related canceled checks shall be retained by the contractor and subcontractor for a period of three years after completion of the project.

B-4. Apprentices and Trainees.

(i) Apprentices. Apprentices will be permitted to work at less than the predetermined rate for the work they performed when they are employed pursuant to and individually registered in a bona fide apprenticeship program registered with the U.S. Department of Labor, Employment and Training Administration, Bureau of Apprenticeship and Training, or with a State Apprenticeship Agency recognized by the Bureau, or if a person is employed in his or her first 90 days of probationary employment as an apprentice in such an apprenticeship program, who is not individually registered in the program, but who has been certified by the Bureau of Apprenticeship and Training or a State Apprenticeship Agency (where appropriate) to be eligible for probationary employment as an apprentice. The allowable ratio of apprentices to journeymen on the job site in any craft classification shall not be

greater than the ratio permitted to the contractor as to the entire work force under the registered program. Any worker listed on a payroll at an apprentice wage rate, who is not registered or otherwise employed as stated above, shall be paid not less than the applicable wage rate on the wage determination for the classification of work actually performed. In addition, any apprentice performing work on the job site in excess of the ratio permitted under the registered program shall be paid not less than the applicable wage rate on the wage determination for the work actually performed. Where a contractor is performing construction on a project in a locality other than that in which its program is registered, the ratios and wage rates (expressed in percentages of the journeyman's hourly rate) specified in the contractor's or subcontractors registered program shall be observed. Every apprentice must be paid at not less than the rate specified in the registered program for the apprentice's level of progress, expressed as a percentage of the journeymen hourly rate specified in the applicable wage determination. Apprentices shall be paid fringe benefits in accordance with the provisions of the apprenticeship program. If the apprenticeship program does not specify fringe benefits, apprentices must be paid the full amount of fringe benefits listed on the wage determination for the applicable classification. If the Administrator determines that a different practice prevails for the applicable apprentice classification, fringes shall be paid in accordance with that determination. In the event the Bureau of Apprenticeship and Training, or a State Apprenticeship Agency recognized by the Bureau, withdraws approval of an apprenticeship program, the contractor will no longer be permitted to utilize apprentices at less than the applicable predetermined rate for the work performed until an acceptable program is approved.

(ii) Trainees. Except as provided in 29 CFR 5.16, trainees will not be permitted to work at less than the predetermined rate for the work performed unless they are employed pursuant to and individually registered in a program which has received prior approval, evidenced by formal certification by the U.S. Department of Labor, Employment and Training Administration. The ratio of trainees to journeymen on the job site shall not be greater than permitted under the plan approved by the Employment and Training Administration. Every trainee must be paid at not less than the rate specified in the approved program for the trainee's level of progress, expressed as a percentage of the journeyman hourly rate specified in the applicable wage determination. Trainees shall be paid fringe benefits in accordance with the provisions of the trainee program. If the trainee program does not mention fringe benefits, trainees shall be paid the full amount of fringe benefits listed on the wage determination unless the Administrator of the Wage and Hour Division determines that there is an apprenticeship program associated with the corresponding journeyman wage rate on the wage determination which provides for less than full fringe benefits for apprentices. Any employee listed on the payroll at a trainee rate who is not registered and participating in a training plan approved by the Employment and Training Administration shall be paid not less than the applicable wage rate on the wage determination for the classification of work actually performed. In addition, any trainee performing work on the job site in excess of the ratio permitted under the registered program shall be paid not less than the applicable wage rate on the wage determination for the work actually performed. In the event the Employment and Training Administration withdraws approval of a training program, the contractor will no longer be permitted to utilize trainees at less than the applicable predetermined rate for the work performed until an acceptable program is approved.

(iii) Equal Employment Opportunity. The utilization of apprentices, trainees and journeymen under this part shall be in conformity with the equal employment opportunity requirements of Executive Order 11246, as amended, and 29 CFR Part 30.

B-5. Compliance With Copeland Act Requirements.

The contractor shall comply with the requirements of 29 CFR Part 3, which are incorporated by reference in this contract.

B-6. Subcontracts.

The contractor or subcontractor shall insert in any subcontracts the clauses contained in 29 CFR Part 5.5(a)(1) through (10) and such other clauses as the Federal Aviation Administration may by appropriate instructions require, and also a clause requiring the subcontractors to include these clauses in any lower tier subcontracts. The prime contractor shall be responsible for the compliance by any subcontractor or lower tier subcontractor with all the contract clauses in 29 CFR Part 5.5.

B-7. Contract Termination: Debarment.

A breach of the contract clauses in paragraph 1 through 10 of this section may be grounds for termination of the contract, and for debarment as a contractor and a subcontractor as provided in 29 CFR 5.12.

B-8. Compliance With Davis-Bacon and Related Act Requirements.

All rulings and interpretations of the Davis-Bacon and Related Acts contained in 29 CFR Parts 1, 3, and 5 are herein incorporated by reference in this contract.

B-9. Disputes Concerning Labor Standards.

Disputes arising out of the labor standards provisions of this contract shall not be subject to the general disputes clause of this contract. Such disputes shall be resolved in accordance with the procedures of the Department of Labor set forth in 29 CFR Parts 5, 6 and 7. Disputes within the meaning of this clause include disputes between the contractor (or any of its subcontractors) and the contracting agency, the U.S. Department of Labor, or the employees or their representatives.

B-10. Certification of Eligibility.

(i) By entering into this contract, the contractor certifies that neither it (nor he or she) nor any person or firm who has an interest in the contractor's firm is a person or firm ineligible to be awarded Government contracts by virtue of section 3(a) of the Davis-Bacon Act or 29 CFR 5.12(a)(1).

(ii) No part of this contract shall be subcontracted to any person or firm ineligible for award of a Government contract by virtue of section 3(a) of the Davis-Bacon Act or 29 CFR 5.12(a)(1).

(iii) The penalty for making false statements is prescribed in the U.S. Criminal Code, 18 U.S.C. 1001.

Reference
29 CFR Part 5.5
Advisory Circular 150/5100-6d as may be revised

SECTION C

(Federal Aviation Administration (FAA) Requirements)

CONTRACT WORKHOURS AND SAFETY STANDARDS ACT REQUIREMENTS (29 CFR PART 5)

1. Overtime Requirements.
No contractor or subcontractor contracting for any part of the contract work which may require or involve the employment of laborers or mechanics shall require or permit any such laborer or mechanic, including watchmen and guards, in any workweek in which he or she is employed on such work to work in excess of forty hours in such workweek unless such laborer or mechanic receives compensation at a rate not less than one and one-half times the basic rate of pay for all hours worked in excess of forty hours in such workweek.

2. Violation; Liability for Unpaid Wages; Liquidated Damages.
In the event of any violation of the clause set forth in paragraph (1) above, the contractor and any subcontractor responsible therefor shall be liable for the unpaid wages. In addition, such contractor and subcontractor shall be liable to the United States (in the case of work done under contract for the District of Columbia or a territory, to such District or to such territory), for liquidated damages. Such liquidated damages shall be computed with respect to each individual laborer or mechanic, including watchmen and guards, employed in violation of the clause set forth in paragraph 1 above, in the sum of $10 for each calendar day on which such individual was required or permitted to work in excess of the standard workweek of forty hours without payment of the overtime wages required by the clause set forth in paragraph 1 above.

3. Withholding for Unpaid Wages and Liquidated Damages.
The Federal Aviation Administration or the Sponsor shall upon its own action or upon written request of an authorized representative of the Department of Labor withhold or cause to be withheld, from any monies payable on account of work performed by the contractor or subcontractor under any such contract or any other Federal contract with the same prime contractor, or any other Federally-assisted contract subject to the Contract Work Hours and Safety Standards Act, which is held by the same prime contractor, such sums as may be determined to be necessary to satisfy any liabilities of such contractor or subcontractor for unpaid wages and liquidated damages as provided in the clause set forth in paragraph 2 above.

4. Subcontractors.
The contractor or subcontractor shall insert in any subcontracts the clauses set forth in paragraphs 1 through 4 and also a clause requiring the subcontractor to include these clauses in any lower tier subcontracts. The prime contractor shall be responsible for compliance by any subcontractor or lower tier subcontractor with the clauses set forth in paragraphs 1 through 4 of this section.

This Page Intentionally Left Blank

SECTION D

(Federal Aviation Administration (FAA) Requirements)

EQUAL EMPLOYMENT OPPORTUNITY
(41 CFR PART 60-1.4(b))

During the performance of this contract, the contractor agrees as follows:

D-1. The contractor will not discriminate against any employee or applicant for employment because of race, color, religion, sex, or national origin. The contractor will take affirmative action to ensure that applicants are employed, and that employees are treated during employment without regard to their race, color, religion, sex, or national origin. Such action shall include, but not be limited to the following: Employment, upgrading, demotion, or transfer; recruitment or recruitment advertising; layoff or termination; rates of pay or other forms of compensation; and selection for training, including apprenticeship. The contractor agrees to post in conspicuous places, available to employees and applicants for employment, notices to be provided setting forth the provisions of this nondiscrimination clause.

D-2. The contractor will, in all solicitations or advertisements for employees placed by or on behalf of the contractor, state that all qualified applicants will receive considerations for employment without regard to race, color, religion, sex, or national origin.

D-3. The contractor will send to each labor union or representative of workers with which s/he has a collective bargaining agreement or other contract or understanding, a notice to be provided advising the said labor union or workers' representatives of the contractor's commitments under this section, and shall post copies of the notice in conspicuous places available to employees and applicants for employment.

D-4. The contractor will comply with all provisions of Executive Order 11246 of September 24, 1965, as amended, and of the rules, regulations, and relevant orders of the Secretary of Labor.

D-5. The contractor will furnish all information and reports required by Executive Order 11246 of September 24, 1965, and by rules, regulations, and orders of the Secretary of Labor, or pursuant thereto, and will permit access to his books, records, and accounts by the administering agency and the Secretary of Labor for purposes of investigation to ascertain compliance with such rules, regulations, and orders.

D-6. In the event of the contractor's noncompliance with the nondiscrimination clauses of this contract or with any of the said rules, regulations, or orders, this contract may be canceled, terminated or suspended in whole or in part and the contractor may be declared ineligible for further Government contracts or federally assisted construction contracts in accordance with

procedure authorized in Executive Order 11246 of September 24, 1965, a nd such other sanctions may be imposed and remedies invoked as provided in Executive Order 11246 of September 24, 1965, or by rule, regulation, or order of the Secretary of Labor, or as otherwise provided by law.

D-7. The contractor will include the portion of the sentence immediately preceding paragraph (1) and the provisions of paragraphs (1) through (7) in every subcontract or purchase order unless exempted by rules, regulations, or orders of the Secretary of Labor issued pursuant to section 204 of Executive Order 11246 of September 24, 1965, so that such provisions will be binding upon each subcontractor or vendor. The contractor will take such action with respect to any subcontract or purchase order as the administering agency may direct as a means of enforcing such provision, including sanctions for noncompliance: Provided, however, that in the event a contractor becomes involved in, or is threatened with, litigation with a subcontractor or vendor as a result of such direction by the administering agency the contractor may request the United States to enter into such litigation to protect the interests of the United States.

SECTION E

(Federal Aviation Administration (FAA) Requirements)

CLEAN AIR AND WATER POLLUTION CONTROL REQUIREMENTS

E-1 Any other provision herein to the contrary notwithstanding, the contractor in carrying out work under this contract, shall at all times comply with all applicable state and federal air and water quality standards; with all pollution control laws; and with such rules, regulations, and directives as may be lawfully issued by a local, state, or federal agency having within its jurisdiction the protection of the environment in the area surrounding where work under this contractor will be performed. In addition, the contractor shall comply with directives given by the Project Engineer in implementation of the letter and intent of FAA Advisory Circular 150/5370-10, Item P-156, Temporary Air and Water Pollution, Soil Erosion and Siltation Control. Copies of this Advisory Circular can be obtained from the Department of Transportation, Federal Aviation Administration website www.faa.gov.

E-2 Contractors and subcontractors agree:

a. That any facility to be used in the performance of the contract or subcontract or to benefit from the contract is not listed on the Environmental Protection Agency (EPA) List of Violating Facilities;

b. To comply with all the requirements of Section 114 of the Clean Air Act, as amended, 42 U.S.C. 1857 et seq. and Section 308 of the Federal Water Pollution Control Act, as amended, 33 U.S.C. 1251 et seq. relating to inspection, monitoring, entry, reports, and information, as well as all other requirements specified in Section 114 and Section 308 of the Acts, respectively, and all other regulations and guidelines issued thereunder;

c. That, as a condition for the award of this contract, the contractor or subcontractor will notify the awarding official of the receipt of any communication from the EPA indicating that a facility to be used for the performance of or benefit from the contract is under consideration to be listed on the EPA List of Violating Facilities;

d. To include or cause to be included in any construction contract or subcontract which exceeds $100,000 the aforementioned criteria and requirements.

Reference
49 CFR Part 18.36(i)(12)
Section 306 of the Clean Air Act
Section 508 of the Clean Water Act

This Page Intentionally Left Blank

SECTION F

(Federal Aviation Administration (FAA) Requirements)

STANDARD FEDERAL EQUAL EMPLOYMENT OPPORTUNITY CONSTRUCTION CONTRACT SPECIFICATIONS
(41 C.F.R. 60-43)

F-1. As used in these specifications:

a. "Covered area" means the geographical area described in the solicitation from which this contract resulted;

b. "Director" means Director, Office of Federal Contract Compliance Programs (OFCCP), U.S. Department of Labor, or any person to whom the Director delegates authority;

c. "Employer identification number" means the Federal social security number used on the Employer's Quarterly Federal Tax Return, U.S. Treasury Department Form 941;

d. "Minority" includes:

(1) Black (all) persons having origins in any of the Black African racial groups not of Hispanic origin);

(2) Hispanic (all persons of Mexican, Puerto Rican, Cuban, Central or South American, or other Spanish culture or origin regardless of race);

(3) Asian and Pacific Islander (all persons having origins in any of the original peoples of the Far East, Southeast Asia, the Indian Subcontinent, or the Pacific Islands); and

(4) American Indian or Alaskan native (all persons having origins in any of the original peoples of North America and maintaining identifiable tribal affiliations through membership and participation or community identification).

F-2. Whenever the contractor, or any subcontractor at any tier, subcontracts a portion of the work involving any construction trade, it shall physically include in each subcontract in excess of $10,000 the provisions of these specifications and the Notice which contains the applicable goals for minority and female participation and which is set forth in the solicitations from which this contract resulted.

F-3. If the contractor is participating (pursuant to 41 CFR 60-4.5) in a Hometown Plan approved by the U.S. Department of Labor in the covered area either individually or through an association, its affirmative action obligations on all work in the Plan area (including goals and timetables) shall be in accordance with that Plan for those trades which have unions participating in the Plan. Contractors shall be able to demonstrate their participation in and compliance with the provisions of any such Hometown Plan. Each contractor or subcontractor participating in an approved plan is individually required to comply with its obligations under the EEO clause and to make a good faith effort to achieve each goal under the Plan in each trade in which it has employees. The overall good faith performance by other contractors or subcontractors toward a goal in an approved Plan does not excuse any covered contractor's or subcontractor's failure to take good faith efforts to achieve the Plan goals and timetables.

F-4. The contractor shall implement the specific affirmative action standards provided in paragraphs F-7a through F-7p of these specifications. The goals set forth in the solicitation from which this contract resulted are expressed as percentages of the total hours of employment and training of minority and female utilization the contractor should reasonably be able to achieve in each construction trade in which it has employees in the covered area. Covered construction contractors performing construction work in a geographical area where they do not have a Federal or federally assisted construction contract shall apply the minority and female goals established for the geographical area where the work is being performed. Goals are published periodically in the Federal Register in notice form, and such notices may be obtained from any Office of Federal Contract Compliance Programs office or from Federal procurement contracting officers. The contractor is expected to make substantially uniform progress in meeting its goals in each craft during the period specified.

F-5. Neither the provisions of any collective bargaining agreement nor the failure by a union with whom the contractor has a collective bargaining agreement to refer either minorities or women shall excuse the contractor's obligations under these specifications, Executive Order 11246 or the regulations promulgated pursuant thereto.

F-6. In order for the non-working training hours of apprentices and trainees to be counted in meeting the goals, such apprentices and trainees shall be employed by the contractor during the training period and the contractor shall have made a commitment to employ the apprentices and trainees at the completion of their training, subject to the availability of employment opportunities. Trainees shall be trained pursuant to training programs approved by the U.S. Department of Labor.

F-7. The contractor shall take specific affirmative actions to ensure equal employment opportunity. The evaluation of the contractor's compliance with these specifications shall be based upon its effort to achieve maximum results from its actions. The contractor shall document these efforts fully and shall implement affirmative action steps at least as extensive as the following:

a. Ensure and maintain a working environment free of harassment, intimidation, and coercion at all sites, and in all facilities at which the contractor's employees are assigned to work. The contractor, where possible, will assign two or more women to each construction project. The contractor shall specifically ensure that all foremen, superintendents, and other onsite supervisory personnel are aware of and carry out the contractor's obligation to maintain such a working environment, with specific attention to minority or female individuals working at such sites or in such facilities.

b. Establish and maintain a current list of minority and female recruitment sources, provide written notification to minority and female recruitment sources and to community organizations when the contractor or its unions have employment opportunities available, and maintain a record of the organizations' responses.

c. Maintain a current file of the names, addresses, and telephone numbers of each minority and female off-the-street applicant and minority or female referral from a union, a recruitment source, or community organization and of what action was taken with respect to each such individual. If such individual was sent to the union hiring hall for referral and was not referred back to the contractor by the union or, if referred, not employed by the contractor, this shall be documented in the file with the reason therefore along with whatever additional actions the contractor may have taken.

d. Provide immediate written notification to the Director when the union or unions with which the contractor has a collective bargaining agreement has not referred to the contractor a minority person or female sent by the contractor, or when the contractor has other information that the union referral process has impeded the contractor's efforts to meet its obligations.

e. Develop on-the-job training opportunities and/or participate in training programs for the area which expressly include minorities and women, including upgrading programs and apprenticeship and trainee programs relevant to the contractor's employment needs, especially those programs funded or approved by the Department of Labor. The contractor shall provide notice of these programs to the sources compiled under 7b above.

f. Disseminate the contractor's EEO policy by providing notice of the policy to unions and training programs and requesting their cooperation in assisting the contractor in meeting its EEO obligations; by including it in any policy manual and collective bargaining agreement; by publicizing it in the company newspaper, annual report, etc.; by specific review of the policy with all management personnel and with all minority and female employees at least once a year; and by posting the company EEO policy on bulletin boards accessible to all employees at each location where construction work is performed.

g. Review, at least annually, the company's EEO policy and affirmative action obligations under these specifications with all employees having any responsibility for hiring, assignment, layoff, termination, or other employment decisions including specific review of these items with onsite supervisory personnel such a superintendents, general foremen, etc., prior to the initiation of construction work at any job site. A written record shall be made and maintained identifying the time and place of these meetings, persons attending, subject matter discussed, and disposition of the subject matter.

h. Disseminate the contractor's EEO policy externally by including it in any advertising in the news media, specifically including minority and female news media, and providing written notification to and discussing the contractor's EEO policy with other contractors and subcontractors with whom the contractor does or anticipates doing business.

i. Direct its recruitment efforts, both oral and written, to minority, female, and community organizations, to schools with minority and female students; and to minority and female recruitment and training organizations serving the contractor's recruitment area and employment needs. Not later than one month prior to the date for the acceptance of applications for apprenticeship or other training by any recruitment source, the contractor shall send written notification to organizations, such as the above, describing the openings, screening procedures, and tests to be used in the selection process.

j. Encourage present minority and female employees to recruit other minority persons and women and, where reasonable, provide after school, summer, and vacation employment to minority and female youth both on the site and in other areas of a contractor's workforce.

k. Validate all tests and other selection requirements where there is an obligation to do so under 41 CFR Part 60-3.

l. Conduct, at least annually, an inventory and evaluation at least of all minority and female personnel, for promotional opportunities and encourage these employees to seek or to prepare for, through appropriate training, etc., such opportunities.

m. Ensure that seniority practices, job classifications, work assignments, and other personnel practices do not have a discriminatory effect by continually monitoring all personnel and employment related activities to ensure that the EEO policy and the contractor's obligations under these specifications are being carried out.

n. Ensure that all facilities and company activities are non-segregated except that separate or single user toilet and necessary changing facilities shall be provided to assure privacy between the sexes.

o. Document and maintain a record of all solicitations of offers for subcontracts from minority and female construction contractors and suppliers, including circulation of solicitations to minority and female contractor associations and other business associations.

p. Conduct a review, at least annually, of all supervisor's adherence to and performance under the contractor's EEO policies and affirmative action obligations.

F-8. Contractors are encouraged to participate in voluntary associations, which assist in fulfilling one or more of their affirmative action obligations (F-7a through F-7p). The efforts of a contractor association, joint contractor union, contractor community, or other similar groups of which the contractor is a member and participant, may be asserted as fulfilling any one or more of its obligations under F-7a through F-7p of these specifications provided that the contractor actively participates in the group, makes every effort to assure that the group has a positive impact on the employment of minorities and women in the industry, ensures that the concrete benefits of the program are reflected in the contractor's minority and female workforce participation, makes a good faith effort to meet its individual goals and timetables, and can provide access to documentation which demonstrates the effectiveness of actions taken on behalf of the contractor. The obligation to comply, however, is the contractor's and failure of such a group to fulfill an obligation shall not be a defense for the contractor's noncompliance.

F-9. A single goal for minorities and a separate single goal for women have been established. The contractor, however, is required to provide equal employment opportunity and to take affirmative action for all minority groups, both male and female, and all women, both minority and non-minority. Consequently, if the particular group is employed in a substantially disparate manner (for example, even though the contractor has achieved its goals for women generally,) the contractor may be in violation of the Executive Order if a specific minority group of women is underutilized.

F-10. The contractor shall not use the goals and timetables or affirmative action standards to discriminate against any person because of race, color, religion, sex, or national origin.

F-11. The contractor shall not enter into any subcontract with any person or firm debarred from Government contracts pursuant to Executive Order 11246.

F-12. The contractor shall carry out such sanctions and penalties for violation of these specifications and of the Equal Opportunity Clause, including suspension, termination, and cancellation of existing subcontracts as may be imposed or ordered pursuant to Executive Order 11246, as amended, and its implementing regulations, by the Office of Federal Contract

Compliance Programs. Any contractor who fails to carry out such sanctions and penalties shall be in violation of these specifications and Executive Order 11246, as amended.

F-13. The contractor, in fulfilling its obligations under these specifications, shall implement specific affirmative action steps, at least as extensive as those standards prescribed in paragraph 7 of these specifications, so as to achieve maximum results from its efforts to ensure equal employment opportunity. If the contractor fails to comply with the requirements of the Executive Order, the implementing regulations, or these specifications, the Director shall proceed in accordance with 41 CFR 60-4.8.

F-14. The contractor shall designate a responsible official to monitor all employment related activity to ensure that the company EEO policy is being carried out, to submit reports relating to the provisions hereof as may be required by the Government, and to keep records. Records shall at least include for each employee, the name, address, telephone number, construction trade, union affiliation if any, employee identification number when assigned, social security number, race, sex, status (e.g., mechanic, apprentice, trainee, helper, or laborer), dates of changes in status, hours worked per week in the indicated trade, rate of pay, and locations at which the work was performed. Records shall be maintained in an easily understandable and retrievable form; however, to the degree that existing records satisfy this requirement, contractors shall not be required to maintain separate records.

F-15. Nothing herein provided shall be construed as a limitation upon the application of other laws which establish different standards of compliance or upon the application of requirements for the hiring of local or other area residents (e.g., those under the Public Works Employment Act of 1977 and the Community Development Block Grant Program).

Reference
Executive Order 11246
41 CFR Parts 60 – 4.3
AC 150/5100-15, Para. 22.c.

SECTION G

(Federal Aviation Administration (FAA) Requirement)

CONTRACTUAL REQUIREMENTS PURSUANT TO CIVIL RIGHTS ACT OF 1964, TITLE VI (49 CFR PART 21)

During the performance of this contract, the contractor, for itself, its assignees and successors in interest (hereinafter referred to as the "contractor") agrees as follows:

1.1 Compliance with Regulations. The contractor shall comply with the Regulations relative to nondiscrimination in federally assisted programs of the Department of Transportation (hereinafter, "DOT") Title 49, Code of Federal Regulations, Part 21, as they may be amended from time to time (hereinafter referred to as the Regulations), which are herein incorporated by reference and made a part of this contract.

1.2 Nondiscrimination. The contractor, with regard to the work performed by it during the contract, shall not discriminate on the grounds of race, color, or national origin in the selection and retention of subcontractors, including procurements of materials and leases of equipment. The contractor shall not participate either directly or indirectly in the discrimination prohibited by section 21.5 of the Regulations, including employment practices when the contract covers a program set forth in Appendix B of the Regulations.

1.3 Solicitations for Subcontracts, Including Procurements of Materials and Equipment. In all solicitations either by competitive bidding or negotiation made by the contractor for work to be performed under a subcontract, including procurements of materials or leases of equipment, each potential subcontractor or supplier shall be notified by the contractor of the contractor's obligations under this contract and the Regulations relative to nondiscrimination on the grounds of race, color, or national origin.

1.4 Information and Reports. The contractor shall provide all information and reports required by the Regulations or directives issued pursuant thereto and shall permit access to its books, records, accounts, other sources of information and its facilities as may be determined by the Sponsor or the Federal Aviation Administration (FAA) to be pertinent to ascertain compliance with such Regulations, orders, and instructions. Where any information required of a contractor is in the exclusive possession of another who fails or refuses to furnish this information, the contractor shall so certify to the sponsor or the FAA, as appropriate, and shall set forth what efforts it has made to obtain the information.

1.5 Sanctions for Noncompliance. In the event of the contractor's noncompliance with the nondiscrimination provisions of this contract, the sponsor shall impose such contract sanctions as it or the FAA may determine to be appropriate, including, but not limited to:

a. Withholding of payments to the contractor under the contract until the contractor complies, and/or
b. Cancellation, termination, or suspension of the contract, in whole or in part.

1.6 Incorporation of Provisions. The contractor shall include the provisions of paragraphs 1 through 5 in every subcontract, including procurements of materials and leases of equipment, unless exempt by the Regulations or directives issued pursuant thereto. The contractor shall take such action with respect to any subcontract or procurement as the sponsor or the FAA may directas a means of enforcing such provisions including sanctions for noncompliance. Provided, however, that in the event a contractor becomes involved in, or is threatened with, litigation with a subcontractor or supplier as a result of such direction, the contractor may request the Sponsor to enter into such litigation to protect the interests of the sponsor and, in addition, the contractor may request the United States to enter into such litigation to protect the interests of the United States.

SECTION H

(Federal Aviation Administration (FAA) Requirements)

TERMINATION OF CONTRACT
(49 CFR PART 18)

a. The Sponsor may, by written notice, terminate this contract in whole or in part at any time, either for the Sponsor's convenience or because of failure to fulfill the contract obligations. Upon receipt of such notice services shall be immediately discontinued (unless the notice directs otherwise) and all materials as may have been accumulated in performing this contract, whether completed or in progress, delivered to the Sponsor.

b. If the termination is for the convenience of the Sponsor, an equitable adjustment in the contract price shall be made, but no a mount shall be allowed for anticipated profit on unpe rformed services.

c. If the termination is due to failure to fulfill the contractor's obligations, the Sponsor may take over the work and prosecute the same to completion by contract or otherwise. In such case, the contractor shall be liable to the Sponsor for any additional cost occasioned to the Sponsor thereby.

d. If, after notice of termination for failure to fulfill contract obligations, it is determined that the contractor had not so failed, the termination shall be deemed to have been effected for the convenience of the Sponsor. In such event, adjustment in the contract price shall be made as provided in paragraph 2 of this clause.

e. The rights and remedies of the sponsor provided in this clause are in addition to any other rights and remedies provided by law or under this contract.

f. TxDOT Aviation General Provisions 80-09 and 80-10 are included by reference to this section.

This Page Intentionally Left Blank

SECTION I

(Federal Aviation Administration (FAA) Requirements)

BUY AMERICAN - STEEL AND MANUFACTURED PRODUCTS FOR CONSTRUCTION CONTRACTS (Aviation Safety and Capacity Expansion Act of 1990)

The Contractor agrees that only domestic steel and manufactured products will be used by the Contractor, subcontractors, materialmen, and suppliers in the performance of this contract, as defined in (b) below.

The following terms apply to this clause:

1. Steel and manufactured products. As used in this clause, steel and manufactured products include (1) those produced in the United States or (2) a manufactured product produced in the United States, if the cost of its components mined, produced or manufactured in the United States exceeds 60 percent of the cost of all its components and final assembly has taken place in the United States.

Components. As used in this clause, components mean those articles, materials, and supplies incorporated directly into steel and manufactured products.

Cost of Components. This means the cost for production of the components, exclusive of final assembly labor costs.

(c.) FAA Headquarters (APP-500) maintains a list of equipment that is frequently used on AIP-funded projects that has been issued a Nationwide Waiver. Sponsors do not need to request waivers for equipment on this Buy American Conformance List. The list may be obtained at http://www.faa.gov/airports/aip/buy_american/.

Please note, Section I, Buy American-Steel and Manufactured Products for Construction Contracts, of the General Provisions is not applicable to state funded products.

(d.) Program Guidance Letter 10-02 attached.

Memorandum

U.S. Department of Transportation
Federal Aviation Administration

Subject:	**ACTION:** Program Guidance Letter 10-02	Date:	February 24, 2010
From:	Manager, Airports Financial Assistance Division, APP-500	Reply to Attn. of:	Nancy S. Williams 202-267-8822
To:	PGL Distribution List		

We are issuing this Program Guidance Letter on Buy American requirements.

Frank J. San Martin

Guidance for Buy American on Airport Improvement Program (AIP) or American Recovery and Reinvestment Act (ARRA) projects.

In accepting AIP or ARRA funding, grant recipients are certifying that they will not acquire (or permit any contractor or subcontractor) to use any steel or manufactured products produced outside the United States on any portion of the project for which funds are provided, unless otherwise approved by the FAA. Therefore, for the AIP or ARRA funded portion of a project, grant recipients must either:

1. Certify, in writing, all products are wholly produced in the US of US materials, or
2. Request a waiver to use non-US produced products, or
3. Certify that all equipment that is being used on the project is on the Nationwide Buy American conformance list.

The AIP funded portion of a project includes the grant recipient's local share.

Types of Waivers

There are four types of waivers to Buy American:

1. Public interest waiver;
2. Insufficient quantity AND quality for ARRA (AIP projects allow waivers for insufficient quantity OR quality);
3. 60% or more of the components and subcomponents in the facility or equipment are of US origin and final assembly is in the US; or
4. Applying Buy American increases the cost of the overall project by more than 25%.

Many pieces of equipment are constructed with some non-US produced components or subcomponents. Therefore, it is expected that the majority of grants will have waivers issued unless the project is constructed of materials that already have a nationwide waiver.

Nationwide Waiver

Much of the equipment that is frequently used on AIP or ARRA projects has been reviewed by FAA Headquarters and a nationwide waiver has been issued. The Nationwide Buy American conformance list is posted on the www.faa.gov website at the following address:

http://www.faa.gov/airports/aip/procurement/federal_contract_provisions/
by clicking the tab, "Equipment Meeting Buy American Requirements"

If the equipment is on the nationwide waiver list, no additional waiver is required.

Who can Issue Waivers

Only FAA headquarters may issue waivers for reasons 1 and 2. FAA field offices (Regional Offices and/or Airports District Offices) may issue waivers for reasons 3 and 4.

For block grant state projects, the FAA must issue the waivers. Block grant states are not allowed to issue a waiver.

Defining the Project, Facility and Equipment, and Final Assembly Location in the 60%/US final assembly waiver

The waiver can be considered if "at least 60% of the cost of the components and subcomponents in the **facility or equipment** are produced in the United States and the final assembly of the facility or equipment has occurred in the United States." The correct application of the terms is discussed below.

Project
The **"Project"** is generally the project that is being bid. The "Project" does not extend over multiple grants or phases, even though the overall project may be phased or may be built in multiple bid packages.

Facility or Equipment
- For a building, the portion of the building that is being funded under the AIP or ARRA grant is the "**facility**" listed in the waiver.

- For other projects, the bid items as described in the latest edition of FAA Advisory Circular 5370-10 will generally be the "**equipment**" referred to in the waiver except for airfield electrical equipment.

- For airfield electrical equipment, the "L-" items listed in the Addendum to FAA Advisory Circular 5345-53C, latest edition will generally be the "**equipment**" referred to in the waiver.

- For a vehicle or single piece of equipment like a snow plow or ARFF vehicle, the single vehicle itself is the "**equipment**."

Final Assembly Location and Labor Exclusion
Final assembly is the substantial transformation of the various components and subcomponents into the equipment. For a building, the final assembly is actual construction of the building.

- For any project other than a building project, the final assembly location is the location where the equipment is assembled, **not the project site itself**.

- For a building, the final assembly location is the airport building site.

In any calculation of Buy American percentage, the labor for the final assembly is excluded. This is because the Buy American statute is based on the cost of materials and equipment, not labor. For a building, this means that only the costs of the materials as they are delivered to the airport site are considered when calculating US and non-US component and subcomponent costs. For equipment, the costs of the final assembly at the manufacturing site are excluded.

Common Materials that are waived or excluded from Buy American - Cement, Concrete, Asphalt and Steel

Cement and concrete is excluded from the Buy American preference requirements (although the steel used for reinforcement, ties, stirrups, etc. must meet Buy American.)

Asphalt and other petroleum products are waived as an excepted item under AMS Guidance T3.6.4.1.e: Foreign Acquisition – Definitions identifying Asphalt as a petroleum product.

Steel is specifically identified in the statute. Therefore, all rebar and discrete, identifiable steel components must be manufactured in the United States.

FAA Waiver

After the FAA has determined that the final assembly location is in the US and the percent of US components and subcomponents is above 60%, a waiver may be issued. **The waiver is for the single project – not a nationwide waiver**.

What Information is required to Issue a Waiver (AIP and ARRA) and for the Federal Register Notice (ARRA)

For waiver type 3, a waiver can be considered if "at least 60% of the cost of the components and subcomponents in the **facility or equipment** are produced in the United States and the final assembly of the facility or equipment has occurred in the United States."

Grant recipients must request waivers from FAA in writing, with sufficient supporting information. Grant recipients are responsible for ensuring their waiver request is complete and accurate using project specific information provided directly by the contractor or the contractor's supplier.

The FAA will conduct its review and approval based on the information provided by the grant recipient.

The information that must be provided for either equipment or for a building:

- Project Number
- Project Name
- Airport Name
- Total Project Cost
- Total Equipment or Bid Item Cost for which the waiver is being requested
- Total Equipment or Bid Item Cost excluding labor for final assembly.

For equipment, the following additional information is required:

- The equipment or bid item for which the waiver is being requested
- The manufacturer and country of origin of the equipment or bid item.
- The location of the final assembly of the equipment or bid item (not the airport site)

- The cost of the US components and subcomponents for the equipment or bid item for which the waiver is being requested
- The cost of the non-US components and subcomponents for the equipment or bid item for which the waiver is being requested
- The resulting percent of US and non-US components

For a building, the following additional information is required:

- The building (called the facility in the Buy American statute) for which the waiver is being requested
- The manufacturer and country of origin of the US and non-US materials that will be used in the building,
- For a building, the location of the final assembly is the airport site
- The cost of the US components and subcomponents for the equipment or bid item for which the waiver is being requested
- The cost of the non-US components and subcomponents for the equipment or bid item for which the waiver is being requested
- The resulting percent of US and non-US components

Grant recipients are urged to submit waiver requests as early as possible.

Waivers that are issued on ARRA projects must be included in a Federal Register notice, which will generally be published on a quarterly basis.

Sample Letter of Approval of Waiver:

When FAA is satisfied that a waiver may be issued based on the 60%/US final assembly criteria, a letter must be written to the airport sponsor approving the waiver. The text of the letter follows.

A copy of the letter must be forwarded to APP-500 along with a copy of the supporting documentation that was submitted by the airport for the waiver. The information used in the letter will be the basis of the Federal Register notice. The Federal Register notice may include copies of the waiver letters or will be a tabular listing of the waivers. Therefore, regions must forward both a *.pdf copy of the signed letter and an editable copy of the letter.

XXXX Airport
AIP-Project No. X-XX-XXXX-XX Project Name
Waiver of Buy American Requirements

I have reviewed the request for Waiver of Buy American Requirement submitted XXX for the use of XXXXX equipment on the subject project. The information submitted by the airport for:

Item for which waiver is being issued: i.e L-831 Transformers
Manufacturer:
Final Assembly Location:

Percent US Components and Subcomponents:

The information submitted satisfies the requirement for waiver of the requirements of the Buy American per 49 USC Section 50101 based on over
60% of the cost of components and subcomponents to be used in the project being produced in the United States.

The waiver is hereby approved for use on this AIP grant project.

Common Misconceptions

• Belief that if a manufacturer is "FAA-certified" that Buy America has been satisfied. This is not true. The FAA certification certifies that technical standards have been met. However, FAA-certified equipment manufactured outside the U.S. does not meet Buy America provisions of the AIP unless a waiver has been issued.

• Misconception that the North America Free Trade Act (NAFTA) exempts equipment manufactured in Mexico or Canada from "Buy America" requirements. This is not true for AIP or ARRA projects.

Text of Buy American statute from 49 United States Code §50101

§ 50101. Buying goods produced in the United States
(a) Preference.— The Secretary of Transportation may obligate an amount that may be appropriated to carry out section 106 (k), 44502 (a)(2), or 44509, subchapter I of chapter 471 (except section 47127), or chapter 481 (except sections 48102 (e), 48106, 48107, and 48110) of this title for a project only if steel and manufactured goods used in the project are produced in the United States.
(b) Waiver.— The Secretary may waive subsection (a) of this section if the Secretary finds that—
(1) applying subsection (a) would be inconsistent with the public interest;
(2) the steel and goods produced in the United States are not produced in a sufficient and reasonably available amount or are not of a satisfactory quality;
(3) when procuring a facility or equipment under section 44502 (a)(2) or 44509, subchapter I of chapter 471 (except section 47127), or chapter 481 (except sections 48102 (e), 48106, 48107, and 48110) of this title—
(A) the cost of components and subcomponents produced in the United States is more than 60 percent of the cost of all components of the facility or equipment; and
(B) final assembly of the facility or equipment has occurred in the United States; or
(4) including domestic material will increase the cost of the overall project by more than 25 percent.
(c) Labor Costs.— In this section, labor costs involved in final assembly are not included in calculating the cost of components.

This Page Intentionally Left Blank

General Provisions

This Page Intentionally Left Blank

TABLE OF CONTENTS

GENERAL PROVISIONS

Section 10	Definitions of Terms
10-01	AASHTO
10-02	Access Road
10-03	Advertisement
10-04	Agent
10-05	AIP
10-06	Air Operations Area
10-07	Airport
10-08	Apron
10-09	ASTM
10-10	Award
10-11	Bid
10-12	Bid Guaranty
10-13	Bidder
10-14	Building Area
10-15	Calendar Day
10-16	Change Order
10-17	Contract
10-18	Contract Item
10-19	Contract Time
10-20	Contractor
10-21	Drainage System
10-22	Engineer
10-23	Escrow
10-24	Equipment
10-25	Extra Work
10-26	FAA
10-27	Federal Specifications
10-28	Intention of Terms
10-29	Laboratory
10-30	Lighting
10-31	Major and Minor Contract Items
10-32	Materials
10-33	Notice to Proceed
10-34	Owner (Sponsor)
10-35	Pavement
10-36	Payment Bond
10-37	Performance Bond
10-38	Plans

10-39	Project
10-40	Resident Project Representative
10-41	Runway
10-42	Specifications
10-43	Sponsor
10-44	Structures
10-45	Subgrade
10-46	Superintendent
10-47	Supplemental Agreement
10-48	Surety
10-49	Taxiway
10-50	Texas Department of Transportation
10-51	Unbalanced Bid
10-52	Work
10-53	Working Day

Section 20 — Bid Requirements and Conditions

20-01	Advertisement
20-02	Prequalification of Bidders
20-03	Contents of Bid Forms
20-04	Interpretation of Estimated Bid Quantities
20-05	Examination of Plans, Specifications, and Site
20-06	Preparation of Bid
20-07	Non-Responsive Bids
20-08	Unbalanced Bid
20-09	Bid Guaranty
20-10	Delivery of Bid
20-11	Withdrawal or Revision of Bids
20-12	Public Opening of Bids
20-13	Disqualification of Bidders

Section 30 — Award and Execution of Contract

30-01	Consideration of Bids
30-02	Award of Contract
30-03	Cancellation of Award
30-04	Return of Bid Guaranty
30-05	Requirements of Contract Bonds
30-06	Execution of Contract
30-07	Approval of Contract
30-08	Failure to Execute Contract
30-09	Beginning of Work
30-10	Certificate of Insurance

30-11 Hazardous Materials

Section 40 Scope of Work

40-01 Intent of Contract
40-02 Alteration of Work and Quantities
40-03 Omitted Items
40-04 Extra Work
40-05 Maintenance of Traffic
40-06 Differing Site Conditions
40-07 Removal of Existing Structures
40-08 Rights in and use of Materials found in the Work
40-09 Final Cleaning Up

Section 50 Control of Work

50-01 Authority of the Engineer
50-02 Conformity with Plans and Specifications
50-03 Coordination of Contract, Plans and Specifications
50-04 Cooperation of Contractor
50-05 Cooperation between Contractors
50-06 Construction Layout and Stakes
50-07 Automatically Controlled Equipment
50-08 Authority and Duties of Inspectors
50-09 Inspection of Work
50-10 Removal of Unacceptable and Unauthorized Work
50-11 Load Restrictions
50-12 Maintenance During Construction
50-13 Failure to Maintain the Work
50-14 Partial Acceptance
50-15 Final Acceptance
50-16 Claims for Adjustment and Disputes
50-17 Cost Reduction Incentive
50-18 Warranty

Section 60 Control of Materials

60-01 Source of Supply and Quality Requirements
60-02 Samples, Tests, and Cited Specifications
60-03 Certification of Compliance
60-04 Plant Inspection
60-05 Engineer's Field Office and Laboratory
60-06 Storage of Materials
60-07 Unacceptable Materials

60-08 Owner Furnished Materials
60-09 Operation and Maintenance Documentation

Section 70 Legal Regulations and Responsibility to Public

70-01 Laws to be Observed
70-02 Permits, Licenses, and Taxes
70-03 Patented Devices, Materials, and Processes
70-04 Restoration of Surfaces Disturbed by Others
70-05 Federal Aid Participation
70-06 Sanitary, Health, and Safety Provisions
70-07 Public Convenience and Safety
70-08 Barricades, Warning Signs, and Hazard Markings
70-09 Use of Explosives
70-10 Protection and Restoration of Property and Landscape
70-11 Responsibility for Damage Claims
70-12 Third Party Beneficiary Clause
70-13 Opening Sections of the Work to Traffic
70-14 Contractor's Responsibility for Work
70-15 Contractor's Responsibility for Utility Service and Facilities of Others
70-16 Furnishing Rights-of-Way
70-17 Personal Liability of Public Officials
70-18 No Waiver of Legal Rights
70-19 Environmental Protection
70-20 Archaeological and Historical Findings

Section 80 Prosecution and Progress

80-01 Subcontracting of Contract
80-02 Notice to Proceed
80-03 Prosecution and Progress
80-04 Limitation of Operations
80-05 Character of Workers, Methods, and Equipment
80-06 Temporary Suspension of the Work
80-07 Determination and Extension of Contract Time
80-08 Failure to Complete on Time
80-09 Abandonment of Work or Default of Contract
80-10 Termination of Contract

Section 90 Measurement and Payment

90-01 Measurement of Quantities
90-02 Scope of Payment

90-03 Compensation for Altered Quantities
90-04 Payment for Omitted Items
90-05 Payment for Extra and Force Account Work
90-06 Partial Payments
90-07 Payment for Materials on Hand
90-08 Payment of Withheld Funds
90-09 Acceptance and Final Payment
90-10 Affidavit of All Bills Paid

Section 100 Contractor Quality Control Program

100-01 General
100-02 Description of Program
100-03 Quality Control Organization
100-04 Project Progress Schedule
100-05 Submittals Schedule
100-06 Inspection Requirements
100-07 Quality Control Testing Plan
100-08 Documentation of Quality Control Activities
100-09 Corrective Action Requirements
100-10 Surveillance by the Engineer
100-11 Noncompliance

Section 110 Methods of Estimating Percentage of Material within Specifications Limits (PWL)

110-01 General
110-02 Method for Computing PWL

Section 120 Nuclear Gages

120-01 Testing
120-02 Verification Testing

This Page Intentionally Left Blank

GENERAL PROVISIONS

SECTION 10

DEFINITION OF TERMS

Whenever the following terms are used in these specifications, in the contract, in any documents or other instruments pertaining to construction where these specifications govern, the intent and meaning shall be interpreted as follows:

10-01 AASHTO. The American Association of State Highway and Transportation Officials, the successor association to AASHO.

10-02 ACCESS ROAD. The right-of-way, the roadway and all improvements constructed thereon connecting the airport to a public highway.

10-03 ADVERTISEMENT. A public announcement as required by local law, inviting bids for work to be performed and materials to be furnished.

10-04 AGENT. The Texas Department of Transportation, Aviation Division (TxDOT) acting as the "Agent" for the airport sponsor in accordance with the duly executed Airport Project Participation Agreement (APPA).

10-05 AIP. The Airport Improvement Program, a grant-in-aid program, administered by Federal Aviation Administration through TxDOT.

10-06 AIR OPERATIONS AREA (AOA) For the purpose of these specifications, the term air operations area shall mean any area of the airport used or intended to be used for the landing, takeoff, or surface maneuvering of aircraft. An air operation area shall include such paved or unpaved areas that are used or intended to be used for the unobstructed movement of aircraft in addition to its associated runway, taxiway, or apron.

10-07 AIRPORT. Airport means an area of land or water that is used or intended to be used for the landing and takeoff of aircraft, and includes its buildings and facilities, if any.

10-08 APRON. An area on an airport designated for the parking of aircraft.

10-09 ASTM. The American Society for Testing and Materials.

10-10 AWARD. The owner's acceptance, with the Engineer's recommendation and TxDOT's approval, of the successful bidder's bid.

10-11 BID. The written or electronic offer of the bidder (when submitted on the approved form) to perform the contemplated work and furnish the necessary materials in accordance with the provisions of the plans and specifications.

10-12 BID GUARANTY. The security furnished with a bid to guarantee that the bidder will enter into a contract if his bid is accepted by TxDOT.

10-13 BIDDER. Any individual, partnership, firm, Joint Venture, limited liability partnership (LLP) or corporation, acting directly or through a duly authorized representative, who submits a bid for the work contemplated.

10-14 BUILDING AREA. An area on the airport to be used, considered, or intended to be used for airport buildings or other airport facilities or rights-of-way together with all airport buildings and facilities located thereon.

10-15 CALENDAR DAY. Every day shown on the calendar.

10-16 CHANGE ORDER. A written order to the Contractor covering changes in the plans, specifications, or quantities and establishing the basis of payment and contract time adjustment, if any, for the work affected by such changes. The work, covered by a change order, shall be within the scope of the contract.

10-17 CONTRACT. The written agreement covering the work to be performed. The awarded contract shall include, but is not limited to: the advertisement; the contract document; the bid; the performance bond; the payment bond; any required insurance certificates; the specifications; the plans; and any addenda issued to bidders.

10-18 CONTRACT ITEM (PAY ITEM). A specific unit of work for which a price is provided in the contract.

10-19 CONTRACT TIME. The number of calendar days or working days, stated in the bid, allowed for completion of the contract, including authorized time extensions. If a calendar date of completion is stated in the bid, in lieu of a number of calendar or working days, the contract shall be completed by that date.

10-20 CONTRACTOR. The individual, firm, partnership, joint venture, LLP, or corporation primarily liable for the acceptable performance of the work contracted and for the payment of all legal debts pertaining to the work who acts directly or through lawful agents or employees to complete the contract work.

10-21 DRAINAGE SYSTEM. The system of pipes, ditches, and structures by which surface or subsurface waters are collected and conducted from the airport area.

10-22 ENGINEER. The individual, firm, partnership, joint venture, LLP, or corporation duly authorized by TxDOT (acting as the Agent for the airport sponsor) to be responsible for engineering supervision of the contract work and acting directly or through an authorized representative. The engineer shall be understood to be TxDOT's duly authorized representative.

10-23 ESCROW. An account established by the contractor at an approved bank for the deposit of a ten percent retainage on all partial payments.

10-24 EQUIPMENT. All machinery, together with the necessary supplies for upkeep and maintenance, and also all tools and apparatus necessary for the proper construction and acceptable completion of the work.

10-25 EXTRA WORK. An item of work not provided for in the awarded contract as previously modified by change order or supplemental agreement, but which is found by the Engineer to be necessary to complete the work within the intended scope of the contract as previously modified.

10-26 FAA. The Federal Aviation Administration of the U.S. Department of Transportation. When used to designate a person, FAA shall mean the Administrator or his duly authorized representative.

10-27 FEDERAL SPECIFICATIONS. The Federal Specifications and Standards, and supplements, amendments, and indices thereto are prepared and issued by the General Services Administration of the Federal Government.

10-28 INTENTION OF TERMS. Whenever, in these specifications or on the plans, the words Words "directed," "required," "permitted," "ordered," "designated," "prescribed," or words of the like import are used, it shall be understood that the direction, requirement, permission, order, designation, or prescription of the Engineer is intended; and similarly, the words "approved," "acceptable," "satisfactory," or words of like import, shall mean approved by, or acceptable to, or satisfactory to the Engineer, subject in each case to the final determination of the owner.

Any reference to a specific requirement of a numbered paragraph of the contract specifications or a cited standard shall be interpreted to include all general requirements of the entire section, specification item, or cited standard that may be pertinent to such specific reference.

10-29 LABORATORY. The official testing laboratories of TxDOT or such other laboratories as may be designated by the Engineer.

10-30 LIGHTING. A system of fixtures providing or controlling the light sources used on or near the airport or within the airport buildings. The field lighting includes all luminous signals, markers, floodlights, and illuminating devices used on or near the airport or to aid in the operation of aircraft landing at, taking off from, or taxiing on the airport surface.

10-31 MAJOR AND MINOR CONTRACT ITEMS. A major contract item shall be any item that is listed in the bid, the total cost of which is equal to or greater that 20 percent of the total amount of the awarded contract. All other items shall be considered minor contract items.

10-32 MATERIALS. Any substance specified for use in the construction of the contract work.

10-33 NOTICE TO PROCEED. A written notice to the Contractor to begin the actual contract work on a previously agreed to date. If applicable, the Notice to Proceed shall state the date on which the contract time begins.

10-34 OWNER (SPONSOR). The term owner shall mean the party of the first part or the contracting agency signatory to the contract. For AIP and state funded contracts, the term sponsor shall have the same meaning as the term owner. TxDOT, Aviation Division will

act as the Sponsor's Agent.

10-35 PAVEMENT. The combined surface course, base course, and subbase course, if any, considered as a single unit.

10-36 PAYMENT BOND. The approved form of security furnished by the Contractor and his surety as a guarantee that he will pay in full all bills and accounts for materials and labor used in the construction of the work.

10-37 PERFORMANCE BOND. The approved form of security furnished by the Contractor and his surety as a guarantee that the Contractor will complete the work in accordance with the terms of the contract.

10-38 PLANS. The official drawings or exact reproductions which show the location, character, dimensions and details of the airport and the work to be done and which are to be considered as a part of the contract, supplementary to the specifications.

10-39 PROJECT. The agreed scope of work for accomplishing specific airport development with respect to a particular airport.

10-40 RESIDENT PROJECT REPRESENTATIVE (RPR). An individual who monitors activities on site during construction activities, reporting directly to the Engineer.

10-41 RUNWAY. The area on the airport prepared for the landing and takeoff of aircraft.

10-42 SPECIFICATIONS. A part of the contract containing the written directions and requirements for completing the contract work. Standards for specifying materials or testing which are cited in the contract specifications by reference shall have the same force and effect as if included in the contract physically.

10-43 SPONSOR. See Owner.

10-44 STRUCTURES. Airport facilities such as bridges; culverts; catch basins, inlets, retaining walls, cribbing; storm and sanitary sewer lines; water lines; underdrains; electrical ducts, manholes, handholes, lighting fixtures and bases; transformers; flexible and rigid pavements; navigational aids; buildings; vaults; and, other manmade features of the airport that may be encountered in the work and not otherwise classified herein.

10-45 SUBGRADE. The soil which forms the pavement foundation.

10-46 SUPERINTENDENT. The Contractor's executive representative who is present on the work during progress, authorized to receive and fulfill instructions from the Engineer, and who shall supervise and direct the construction.

10-47 SUPPLEMENTAL AGREEMENT. A written agreement between the Contractor and TxDOT covering: (1) work that would increase or decrease the total amount of the awarded contract, or any major contract item, by more than 25 percent, such increased or decreased work being within the scope of the originally awarded contract; or (2) work that is not within the scope of the originally awarded contract.

10-48 SURETY. The corporation, partnership, or individual, other than the Contractor, executing payment or performance bonds which are furnished to TxDOT by the Contractor.

10-49 TAXIWAY. For the purpose of this document, the term taxiway means the portion of the air operations area of an airport that has been designated by competent airport authority for movement of aircraft to and from the airport's runways or aircraft parking areas.

10-50 TEXAS DEPARTMENT OF TRANSPORTATION (TxDOT). The Texas Department of Transportation, Aviation Division, acting as the sponsor's (owner's) agent for management of the executed contract in accordance with the owner's grant agreement.

10-51 UNBALANCED BID (43 TAC 9.11)
(1) Materially unbalanced bid—A bid which generates a reasonable doubt that award to the bidder submitting a mathematically unbalanced bid will result in the lowest ultimate cost to the state.
(2) Mathematically unbalanced bid –A bid containing lump sum or unit bid items that do not reflect reasonable actual costs plus a r easonable proportionate share of the bidder's anticipated profit, overhead costs, and other indirect costs.

10-52 WORK. The furnishing of all labor, materials, tools, equipment, and incidentals necessary or convenient to the Contractor's performance of all duties and obligations imposed by the contract, plans, and specifications.

10-53 WORKING DAY. A working day shall be any day other than a legal holiday, Saturday, or Sunday on which the normal working forces of the Contractor may proceed with regular work for at least 6 hours toward completion of the contract. Unless work is suspended for causes beyond the Contractor's control, Saturdays, Sundays and holidays on w hich the Contractor's forces engage in regular work, requiring the presence of an inspector, will be considered as working days.

END OF SECTION 10

This Page Intentionally Left Blank

SECTION 20

BID REQUIREMENTS AND CONDITIONS

20-01 ADVERTISEMENT (Notice to Bidders). The contents of the advertisement are included elsewhere in this bid package.

20-02 PREQUALIFICATION OF BIDDERS. Each bidder shall furnish TxDOT satisfactory evidence of his competency to perform the proposed work. Such evidence of competency, unless otherwise specified, shall consist of statements covering the bidder's past experience on similar work, a list of equipment that would be available for the work, and a list of key personnel that would be available. In addition, each bidder shall furnish TxDOT satisfactory evidence of his financial responsibility. Such evidence of financial responsibility, unless otherwise specified, shall consist of a confidential statement or report of the bidder's financial resources and liabilities as of the last calendar year or the Contractor's last fiscal year. Such statements or reports shall be certified by a public accountant. At the time of submitting such financial statements or reports, the bidder shall further certify whether his financial responsibility is approximately the same as stated or reported by the public accountant. If the bidder's financial responsibility has changed, the bidder shall qualify the public accountant's statement or report to reflect his (bidder's) true financial condition at the time such qualified statement or report is submitted to TxDOT.

Each bidder shall submit written evidence from the State Comptroller's office that all applicable franchise taxes owed the State of Texas have been paid. Bids submitted without submission of Qualifications Statements will not be read.

Unless otherwise specified, a bidder may submit evidence that he is prequalified with the Texas Department of Transportation (TxDOT) and is on the current "bidder's list. Such evidence of the Texas Department of Transportation pre-qualification may be submitted as evidence of financial responsibility in lieu of the certified statements or reports required above.

20-03 CONTENTS OF BID FORMS. TxDOT shall furnish bidders with written bid forms. All statements, certifications, and other qualifications indicated in "Instruction to Bidders" or attached to the bid forms are necessary parts.

The plans specifications, and other documents designated in the bid form shall be considered a part of the bid whether attached or not. Bidders may use electronically printed forms if the bid items are presented in the identical order as that in the written bid form.

20-04 INTERPRETATION OF ESTIMATED BID QUANTITIES. An estimate of quantities of work to be done and materials to be furnished under these specifications is given in the bid. It is the result of careful calculations and is believed to be correct. It is given only as a basis for comparison of bids and the award of the contract. TxDOT does not expressly or by implication agree that the actual quantities involved will correspond exactly therewith; nor shall the bidder plead misunderstanding or deception because of such estimates of quantities, or of the character, location, or other conditions pertaining to the work. Payment

to the Contractor will be made only for the actual quantities of work performed or materials furnished in accordance with the plans and specifications. It is understood that the quantities may be increased or decreased as hereinafter provided in the subsection titled ALTERATION OF WORK AND QUANTITIES of Section 40 without in any way invalidating the unit bid prices.

20-05 EXAMINATION OF PLANS, SPECIFICATIONS, AND SITE. The bidder is expected to carefully examine the site of the proposed work, the bid, plans specifications, and contract documents. He shall satisfy himself as to the character, quality, and quantities of work to be performed, materials to be furnished, and as to the requirements of the proposed contract. The submission of a bid shall be *prima facie* evidence that the bidder has made such examination and is satisfied as to the conditions to be encountered in performing the work and as to the requirements of the proposed contract, plans, and specifications.

Boring logs and other records of subsurface investigations and tests are available for inspection of bidders. It is understood and agreed that such subsurface information, whether included in the plans, specifications, or otherwise made available to the bidder, was obtained and is intended for TxDOT's design and estimating purposes only. Such information has been made available for the convenience of all bidders. It is further understood and agreed that each bidder is solely responsible for all assumptions, deductions, or conclusions which he may make or obtain from his examination of the boring logs and other records of subsurface investigations and tests that are furnished by TxDOT

20-06 PREPARATION OF BID. Submit the bid on the form furnished by TxDOT. Make entries in ink. Specify a unit price in dollars and cents for each Item for which an estimated quantity is given. When "Working Days" is an item, submit the number of working days to be used to complete the contract, or phases of the Contract shown on the plans. Include unit bid prices for each Item in the item group or alternate Item group, except for instances when alternate items pertain to foreign steel or iron materials. An item left blank will constitute an incomplete bid and will be handled as prescribed in General Provision 20-07, "Non-Responsive Bids."

If a bid contains alternate Items pertaining to foreign steel or iron materials and the Bidders wished to bid using foreign steel or iron materials, submit unit prices for both the regular Items using domestic steel or iron materials and alternate Items using foreign steel or iron materials. If the Bidder wishes to bid using domestic steel or iron materials, submit unit prices only for the regular domestic Items; unit prices for alternate items using foreign steel are not necessary.

Execute the bid in ink. Provide the complete and correct name of the Bidder submitting the bid. The person authorized to bind the Bidder or Bidders must sign the bid. In the case of a joint venture, the complete and correct name of all Bidders submitting the bid must be provided and all persons authorized to bind the Bidders must sign the bid.

As an Alternative to hand writing the unit prices in works in ink in the bid, submit a computer printout signed by the person authorized to bind the Bidder. In the case of a joint venture, the persons authorized to bid the Bidders must sign the computer printout. As a

minimum, computer printouts must contain the information in the format shown on the "Example of Bid Prices Submitted by Computer Printout" form in the bid.

Verify whether addenda have been issued on a proposed Contract. Acknowledge all addenda. Enter the date or dates of the addendum notification letter or letters on the addenda acknowledgement pages in the bid form.

20-07 NON-RESPONSIVE BIDS. A bidder that submits a bid with one or more of the deficiencies listed below will be considered non-responsive. TxDOT reserves the right to waive technicalities if such waiver is in the best interest of TxDOT and conforms to local laws and ordinances pertaining to the letting of construction contracts.

a. The person or the case of a joint venture, persons, did not sign the bid.

b. The bid or bid bond guaranty does not comply with the requirements contained in Section 20-09.

c. The bid is on a form other than the official bid form issued to the Bidder or Bidders.

d. The bid was not in the hands of the letting official at the time and location specified in the advertisement.

e. The bid submitted has the incorrect number of Bid Items.

f. An electronically printed bid, when used, is not signed in the name of the Bidder (or joint Bidders, in the case of a joint venture), is not in the proper format, omits required items, includes an item or items not shown in the bid or does not have pay items in the same order and with the same information as found on the TxDOT bid form.

g. The Bidder submits more than one bid, under the same or different name, for a proposed Contract. (A Bidder may submit a bid and participate as a material supplier, subcontractor, or both to any or all Bidders contemplating submitting a bid for this work.)

h. The Bidder fails to acknowledge or improperly acknowledges receipt of all addenda issued.

i. The Bidder modifies the bid in a manner that alters the conditions or requirements for work as stated in the bid form.

j. The Bidder did not attend a specified mandatory pre-bid conference.

k. If any portion of a Bid Item is left blank.

l. The Bidder did not write the unit price **BOTH** in words and numerals for

each pay item furnished in the bid form. (Electronically printed bids are not required to have the unit prices written in words.)

m. The bidder did not include qualification statements and/or did not acknowledge the qualification section of the bid form as per the Bidder Qualification section of the bid document.

n. The bidder submitted an incorrect, inaccurate, or insufficient qualification statement.

o. The bid is considered by TxDOT and the Engineer to be unbalanced as defined in Section 20.08.

20-08 UNBALANCED BID. TxDOT will examine the unit bid prices of the apparent low bid for reasonable conformance with TxDOT's estimated prices. TxDOT will evaluate a bid with extreme variations from TxDOT's estimate, or where obvious unbalancing of unit prices has occurred. For the purposes of the evaluation, TxDOT will presume the same retainage percentage for all bidders. In the event that the evaluation of the unit bid prices reveals that the apparent low bid is MATHEMATICALLY UNBALANCED and MATERIALLY UNBALANCED, as defined in Section 10, the bidder will not be considered in future bids for the same project.

20-09 BID GUARANTY. Include a bid guaranty in the amount indicated on the bid form, in the form or either a guaranty check or a bid bond. The bid guaranty amount is fixed at the amount indicated on the bid form on the date the bid is released to the public.

A. Guaranty Check. The bid guaranty must be payable to TxDOT Aviation Division and must be a cashier's check, money order, or teller's check drawn by or on a state or national bank, a savings and loan association, or a state or federally chartered credit union (collectively referred to as "bank"). The type of check or money instrument must be no more than 90 days old. A check must be made by a bank and on a bank; or be payable at or through a bank. TxDOT will not accept personal checks, certified checks, or other types of money orders as a bid guaranty.

B. The Bid bond must be with powers of attorney attached, in the amount specified on the bid bond form. The bond form must bear the impressed seal for the Surety and be signed by the Bidder and authorized individual of the Surety. Bid bonds will only be accepted from Sureties authorized to execute a bond under an in accordance with state law.

20-10 DELIVERY OF BID. Each bid submitted shall be placed in a sealed envelope plainly marked with the project number, location of airport, and name and business address of the bidder on the outside. When sent by mail, the sealed bid, marked as indicated above, should be enclosed in an additional envelope. No bid will be considered unless received at the place specified in the advertisement before the time specified for opening all bids. Bids received after the bid opening time shall be returned to the bidder unopened.

20-11 WITHDRAWAL OR REVISION OF BIDS. A bidder may withdraw or revise (by withdrawal of one bid and submission of another) a bid provided that the bidder's request for

withdrawal is received by TxDOT in writing before the time specified for opening bids. Revised bids must be received at the place specified in the advertisement before the time specified for opening all bids.

20-12 PUBLIC OPENING OF BIDS. Bids shall be opened, and read, publicly at the time and place specified in the advertisement. Bidders, their authorized agents, and other interested persons are invited to attend. Bids that have been withdrawn (in writing) or received after the time specified for opening bids shall be returned to the bidder unopened.

20-13 DISQUALIFICATION OF BIDDERS. TxDOT may consider any one or more of the following reasons as sufficient for rejection of the bid or bids and/or disqualification of the Bidder from further bidding for a period of time as determined by TxDOT:

a. Failure to comply with any pre-qualification regulations of TxDOT, if such regulations are cited, or otherwise included, in the bid as a requirement for bidding.

b. Failure to pay, or satisfactorily settle, all bills due for labor and materials on former contracts or contracts in force with TxDOT at the time TxDOT receives the bid from a prospective bidder.

c. Contractor default under previous contracts with TxDOT.

d. Identified as "in default" by the Federal Aviation Administration.

e. Submitting more than one bid from the same partnership, joint venture, LLP, or corporation under the same or different name.

f. Evidence of collusion among bidders. Bidders participating in such collusion shall be disqualified as bidders for any future work of TxDOT until any such participating bidder has been reinstated by TxDOT as a qualified bidder.

g. Developments, subsequent to establishment of a Bidder's competency and qualifications, which in the opinion of TxDOT would reasonably be construed as affecting the responsibility of the Bidder.

h. Evidence from prior work history with TxDOT that demonstrates substantial or repeated noncompliance with the terms of previous or current/existing contracts with TxDOT.

i. Falsification on any contractual form required by TxDOT during current or previous contracts.

END OF SECTION 20

This Page Intentionally Left Blank

SECTION 30

AWARD AND EXECUTION OF CONTRACT

30-01 CONSIDERATION OF BIDS. After the bids are publicly opened and read, they will be compared on t he basis of the summation of the products obtained by multiplying the estimated quantities shown in the bid by the unit bid prices. If a bidder's bid contains a discrepancy between unit bid prices written in words and unit bid prices written in numbers, the unit price written in words shall govern, unless obviously incorrect.

Until the award of a contract is made, TxDOT reserves the right to reject a bidder's bid for either of the following reasons:

a. If the bid is non-responsive as specified in the subsection titled NON-RESPONSIVE BIDS of Section 20-07.

b. If the bidder is disqualified for any of the reasons specified in the subsection titled DISQUALIFICATION OF BIDDERS of Section 20-13.

c. If the bid is an UNBALANCED BID as specified in Section 20-08.

If a bid is rejected for any of the above reasons, the bidder shall not be considered in future bids for the same project. In addition, until the award of a contract is made, TxDOT reserves the right to reject any or all bids, waive technicalities, if such waiver is in the best interest of TxDOT and is in conformance with applicable federal, state and local laws or regulations pertaining to the letting of construction contracts; advertise for new bids; or proceed with the work otherwise. All such actions shall promote TxDOT's best interests.

30-02 AWARD OF CONTRACT. The award of a contract as follows:

A. If it is to be awarded, shall be made within 60 calendar days of the date specified for publicly opening bids, unless otherwise specified. No award shall be made until TxDOT has concurred with the engineer's recommendation to make such award to the lowest qualified bidder.

The awarded contractor shall also submit within the 14 days, a list of all supplies and subcontracors that quoted on the contract. This list shall include names, addresses, 24 hour telephone numbers and type(s) of work quoted.

Award of the contract shall be made by TxDOT to the lowest, qualified bidder whose bid conforms to the requirements of the bid documents.

B. As the 76th Legislature amended Section 231.006, Family Code as follows:
Section 14.52 INELIGIBILITY TO RECEIVE STATE GRANTS OR LOANS OR BID ON STATE CONTRACTS

A child support obligator who is 30 or more days delinquent in paying child support is not eligible to:

1. Enter into a contract to provide property, materials or services under a contract with the state; or

2. Receive a state-funded grant or loan

The statue required each proposer for a state contract or applicant for a state funded loan or grant to submit a signed, sworn statement accompanying the bid or offer or application a joint venture, LLP, that the proposer or applicant is not 30 or more days delinquent in providing child support under a court order or a written repayment agreement.

Completion of the form title: CHILD SUPPORT STATEMENT FOR NEGOTIATED CONTRACTS AND GRANTS is necessary before execution of a contract.

30-03 CANCELLATION OF AWARD. TxDOT reserves the right to cancel the award without liability to the bidder, except return of bid guaranty, at any time before a contract has been fully executed by all parties and is approved by TxDOT in accordance with the subsection titled APPROVAL OF CONTRACT of this section.

30-04 RETURN OF BID GUARANTY. All bid guaranties, except that of the lowest bidder, will be returned upon request after TxDOT has made a comparison of bids as specified in the subsection titled CONSIDERATION OF BIDS of this section. The successful bidder's bid guaranty will be returned upon request as soon as TxDOT receives the contract bonds as specified in the subsection titled REQUIREMENTS OF CONTRACT BONDS of this section.

30-05 REQUIREMENTS OF CONTRACT BONDS. At the time of the execution of the contract, the successful bidder shall furnish TxDOT a surety bond or bonds which have been fully executed by the bidder and the surety guaranteeing the performance of the work and the payment of all legal debts that may be incurred by reason of the Contractor's performance of the work. The surety and the form of the bond or bonds shall be acceptable to TxDOT. Unless otherwise specified in this subsection, the surety bond or bonds shall be in a sum equal to the full amount of the contract.

30-06 EXECUTION OF CONTRACT. The successful bidder shall complete all required documentation, certifications and sign (execute) the necessary agreements, for entering into the contract and return such completed contract to TxDOT, along with the fully executed surety bond or bonds specified in the subsection titled REQUIREMENTS OF CONTRACT BONDS of this section, within 14 calendar days from the date mailed or otherwise delivered to the successful bidder. If the contract is mailed, special handling is recommended.

30-07 APPROVAL OF CONTRACT. Upon receipt of the contract and contract bond or bonds that have been executed by the successful bidder, TxDOT shall complete the execution of

the contract in accordance with federal, state, and local laws or ordinances, and return the fully executed contract to the Contractor. Delivery of the fully executed contract to the Contractor shall constitute TxDOT's approval to be bound by the successful bidder's bid and the terms of the contract.

30-08 FAILURE TO EXECUTE CONTRACT. The successful bidder shall provide to TxDOT: an acceptable Certificate of Insurance; required Disadvantaged Business Enterprise (DBE)/Historically Underutilized Business(HUB) information including the list of quoting suppliers and subcontractors; acceptable surety bond or bonds as specified in the subsection titled REQUIREMENTS OF CONTRACT BONDS, and Child Support Certification of this section within 14 days after written notification of the award of the contract.

Failure or refusal of the successful bidder to complete and execute the contract within 14 calendar days after written notification of the award shall be just cause for cancellation of the award and forfeiture of the bid guaranty, not as a penalty, but as liquidation of damages to TxDOT. A bidder who forfeits his bid guaranty in accordance with this article will not be considered in future bids for the same work unless extenuating circumstances exist prior to the forfeiture of the bid guaranty.

30-09 BEGINNING OF WORK. If a Storm Water Pollution Prevention Plan (SW3P) is included in this project, the Contractor, and all subcontractors implementing any measure identified on the SW3P, must submit to the Engineer a signed copy of the certification statement as described **Part II, D.6 of the Texas Pollutant Eliminations Discharge System General Permit TXR150000** no later than 48 hours prior to beginning work. The Contractor must participate in a pre-construction conference before work can begin, at which time these certifications will be required.

30-10 CERTIFICATE OF INSURANCE. Within 14 days after receipt of written notification of conditional award of the contract the bidder shall furnish a TxDOT - Aviation Division Certificate of Insurance form covering:

a.Worker's Compensation Insurance Amount - Statutory
b. Commercial General Liability Amount-$600,000 each occurrence
c. Texas Business Automobile Amount - $600,000 combined single limit

This insurance shall be kept in force until the work described in this contract has been completed and accepted by TxDOT. If for any reason insurance coverage is not maintained, all work will cease until an acceptable Certificate of Insurance is provided to TxDOT.

TxDOT shall be included as an "Additional Insured" by Endorsement to policies issued for coverage's listed in b and c above. A "Waiver of Subrogation Endorsement" in favor of TxDOT shall be a part of each policy for coverage's listed in a, b and c above.

30-11 HAZARDOUS MATERIALS. The Contractor is not required to test, remediate, or remove hazardous materials that the Contractor did not introduce onto the work locations.

END OF SECTION 30

SECTION 40

SCOPE OF WORK

40-01 INTENT OF CONTRACT. The intent of the contract is to provide for construction and completion, in every detail, of the work described. It is further intended that the Contractor shall furnish all labor, materials, equipment, tools, transportation, and supplies required to complete the work in accordance with the plans, specifications, and terms of the contract.

40-02 ALTERATION OF WORK AND QUANTITIES. TxDOT reserves and shall have the right to make such alterations in the work as may be necessary or desirable to complete the work originally intended in an acceptable manner. Unless otherwise specified herein, the Engineer shall be and is hereby authorized to make such alterations in the work as may increase or decrease the originally awarded contract quantities, provided that the aggregate of such alterations does not change the total contract cost or the total cost of any major contract item by more than 25 percent (total cost being based on the unit prices and estimated quantities in the awarded contract). Alterations which do not exceed the 25 percent limitation shall not invalidate the contract nor release the surety, and the Contractor agrees to accept payment for such alterations as if the altered work had been a part of the original contract. These alterations which are for work within the general scope of the contract shall be covered by "Change Orders" requested by the Engineer and approved and issued by TxDOT. Change orders for altered work shall include extensions of contract time where, in the Engineer's opinion, such extensions are commensurate with the amount and difficulty of added work.

Should the aggregate amount of altered work exceed the 25 percent limitation specified above, such excess altered work shall be covered by supplemental agreement. If TxDOT and the Contractor are unable to agree on a unit adjustment for any contract item that requires a supplemental agreement, TxDOT reserves the right to terminate the contract with respect to the item and make other arrangements for its completion.

For AIP contracts, all supplemental agreements shall be approved by TxDOT and shall include valid wage determinations of the U.S. Secretary of Labor when the amount of the supplemental agreement exceeds $2,000. However, if the contractor elects to waive the limitations on work that increases or decreases the originally awarded contract or any major contract item by more than 25 percent, the supplemental agreement shall be subject to the same U.S. Secretary of Labor wage determination as was included in the originally awarded contract.

All supplemental agreements shall require consent of the Contractor's surety and separate performance and payment bonds.

40-03 OMITTED ITEMS. The Engineer may, in TxDOT's best interest, omit from the work any contract item, except major contract items. Major contract items may be omitted by a supplemental agreement. Such omission of contract items shall not invalidate any other contract provision or requirement.

Should a contract item be omitted or otherwise ordered to be non-performed, the Contractor shall be paid for all work performed toward completion of such item prior to the date of the order to omit such item. Payment for work performed shall be in accordance with the subsection titled PAYMENT FOR OMITTED ITEMS of Section 90.

40-04 EXTRA WORK. Should acceptable completion of the contract require the Contractor to perform an item of work for which no basis of payment has been provided in the original contract or previously issued change orders or supplemental agreements, the same shall be called Extra Work. Extra work that is within the general scope of the contract shall be covered by written change order. Change orders for such extra work shall contain agreed unit prices for performing the change order work in accordance with the requirements specified in the order, and shall contain any adjustment to the contract time that, in the Engineer's opinion, is necessary for completion of such extra work.

When determined by the Engineer to be in TxDOT's best interest, he may order the Contractor to proceed with extra work by force account as provided in the subsection titled PAYMENT FOR EXTRA AND FORCE ACCOUNT WORK of Section 90.

Extra work that is necessary for acceptable completion of the project, but is not within the general scope of the work covered by the original contract shall be covered by a Supplemental Agreement as herein before defined in the subsection titled SUPPLEMENTAL AGREEMENT of Section 10.

Any claim for payment of extra work that is not covered by written agreement (change order or supplemental agreement) shall be rejected by TxDOT.

40-05 MAINTENANCE OF TRAFFIC. It is the explicit intention of the contract that the safety of aircraft, as well as the Contractor's equipment and personnel, is the most important consideration. It is understood and agreed that the Contractor shall provide for the free and unobstructed movement of aircraft in the air operations areas of the airport with respect to his own operations and the operations of all his subcontractors as specified in the subsection titled LIMITATION OF OPERATIONS of Section 80. It is further understood and agreed that the Contractor shall provide for the uninterrupted operation of visual and electronic signals (including power supplies thereto) used in the guidance of aircraft while operating to, from, and upon the airport as specified in the subsection titled CONTRACTOR'S RESPONSIBILITY FOR UTILITY SERVICE AND FACILITIES OF OTHERS in Section 70.

With respect to his own operations and the operations of all his subcontractors, the Contractor shall provide marking, lighting, and other acceptable means of identifying: personnel; equipment; vehicles; storage areas; and any work area or condition that may be hazardous to the operation of aircraft, fire-rescue equipment, or maintenance vehicles at the airport.

When the contract requires the maintenance of vehicular traffic on an existing road, street, or highway during the Contractor's performance of work that is otherwise provided for in the contract, plans, and specifications, the Contractor shall keep such road, street, or

highway open to all traffic and shall provide such maintenance as may be required to accommodate traffic. The Contractor shall furnish erect, and maintain barricades, warning signs, flagmen, and other traffic control devices in reasonable conformity with the manual of Uniform Traffic Control Devices for Streets and Highways (published by the United States Government Printing Office), unless otherwise specified herein. The Contractor shall also construct and maintain in a safe condition any temporary connections necessary for ingress to and egress from abutting property or intersecting roads, streets or highways. Unless otherwise specified herein, the Contractor will not be required to furnish snow removal for such existing road, street, or highway.

The Contractor shall make his own estimate of all labor, materials, equipment, and incidentals necessary for providing the maintenance of aircraft and vehicular traffic as specified in this subsection.

The cost of maintaining the aircraft and vehicular traffic specified in this subsection shall not be measured or paid for directly, but shall be included in the various contract items.

40-06 DIFFERING SITE CONDITIONS. During the progress of the work, differing subsurface or latent physical conditions may be encountered at the site. The two types of differing site conditions are defined as:

- Those that differ materially from those indicated in the Contract and
- Unknown physical conditions of an unusual nature differing materially from those ordinarily encountered and generally recognized as in inherent in the work provided for the Contract.

Notify the Engineer in writing when differing site conditions are encountered. Unless directed otherwise, suspend work on the affected items and leave the site undisturbed. The Engineer will investigate the conditions and determine whether differing site conditions exist. If the differing site conditions cause an increase or decrease in the cost or number of working days specified for the performance of the Contract, the Engineer will make adjustments, excluding the loss of anticipated profits, in accordance with the Contract. Additional compensation will be made only if the requir3ed written notice has been provided.

40-07 REMOVAL OF EXISTING STRUCTURES. All existing structures encountered within the established lines, grades, or grading sections shall be removed by the Contractor, unless such existing structures are otherwise specified to be relocated, adjusted up or down, salvaged, abandoned in place, reused in the work or to remain in place. The cost of removing such existing structures shall not be measured or paid for directly, but shall be included in the various contract items.

Should the Contractor encounter an existing structure (above or below ground) in the work for which the disposition is not indicated on the plans, the Engineer shall be notified prior to disturbing such structure. The disposition of existing structures so encountered shall be immediately determined by the Engineer in accordance with the provisions of the contract.

Except as provided in the subsection titled RIGHTS IN AND USE OF MATERIALS FOUND IN THE WORK of this section, it is intended that all existing materials or structures that may be encountered (within the lines, grades, or grading sections established for completion of the work) shall be utilized in the work as otherwise provided for in the contract and shall remain the property of TxDOT when so utilized in the work.

40-08 RIGHTS IN AND USE OF MATERIALS FOUND IN THE WORK. Should the Contractor encounter any material such as (but not restricted to) sand, stone, gravel, slag, or concrete slabs within the established lines, grades, or grading sections, the use of which is intended by the terms of the contract to be either embankment or waste, he may at his option either:

a. Use such material in another contract item, providing such use is approved by the Engineer and is in conformance with the contract specifications applicable to such use; or,

b. Remove such material from the site, upon written approval of the Engineer; or

c. Use such material for his own temporary construction on site; or,

d. Use such material as intended by the terms of the contract.

Should the Contractor wish to exercise option a., b., or c., he shall request the Engineer's approval in advance of such use.

Should the Engineer approve the Contractor's request to exercise option a., b., or c., the Contractor shall be paid for the excavation or removal of such material at the applicable contract price. The Contractor shall replace, at his own expense, such removed or excavated material with an agreed equal volume of material that is acceptable for use in constructing embankment, back-fills, or otherwise to the extent that such replacement material is needed to complete the contract work. The Contractor shall not be charged for his use of such material so used in the work or removed from the site.

Should the Engineer approve the Contractor's exercise of option a., the Contractor shall be paid, at the applicable contract price, for furnishing and installing such material in accordance with requirements of the contract item in which the material is used.

It is understood and agreed that the Contractor shall make no claim for delays by reason of his exercise of option a., b., or c.

The Contractor shall not excavate, remove, or otherwise disturb any material, structure, or part of a structure which is located outside the lines, grades, or grading sections established for the work, except where such excavation or removal is provided for in the contract, plans, or specifications.

40-09 FINAL CLEANING UP. Upon completion of the work and before acceptance and final

payment will be made, the Contractor shall remove from the site all machinery, equipment, surplus and discarded materials, rubbish, temporary structures, and stumps or portions of trees. He shall cut all brush and woods within the limits indicated and shall leave the site in a neat and presentable condition. Material cleared from the site and deposited on adjacent property will not be considered as having been disposed of satisfactorily, unless the Contractor has obtained the written permission of such property owner.

END OF SECTION 40

This Page Intentionally Left Blank

SECTION 50

CONTROL OF WORK

50-01 AUTHORITY OF THE ENGINEER. The Engineer shall decide any and all questions which may arise as to the quality and acceptability of materials furnished, work performed, and as to the manner of performance and rate of progress of the work. He shall decide all questions which may arise as to the interpretation of the specifications or plans relating to the work, the fulfillment of the contract on the part of the Contractor, and the rights of different Contractors on the project. The Engineer shall determine the amount and quality of the several kinds of work performed and materials furnished which are to be paid under the contract.

50-02 CONFORMITY WITH PLANS AND SPECIFICATIONS. All work and all materials furnished shall be in reasonably close conformity with the lines, grades, grading sections, cross sections, dimensions, material requirements, and testing requirements that are specified (including specified tolerances) in the contract, plans or specifications.

If the Engineer finds the materials furnished, work performed, or the finished product not within reasonably close conformity with the plans and specifications but that the portion of the work affected will, in his opinion, result in a finished product having a level of safety, economy, durability, and workmanship acceptable to TxDOT, he will advise TxDOT of his determination that the affected work be accepted and remain in place. In this event, the Engineer will document his determination and recommend to TxDOT a basis of acceptance which will provide for an adjustment in the contract price for the affected portion of the work. The Engineer's determination and recommended contract price adjustments will be based on good engineering judgment and such tests or retests of the affected work as are, in his opinion, needed. Changes in the contract price shall be covered by contract modifications (change order or supplemental agreement) as applicable.

If the Engineer finds the materials furnished, work performed, or the finished product are not in reasonably close conformity with the plans and specifications and have resulted in an unacceptable finished product, the affected work or materials shall be removed and replaced or otherwise corrected by and at the expense of the Contractor in accordance with the Engineer's written orders.

If it is found that the material furnished, work performed, or the finished product is not in close conformity with the plans and specifications, the Contractor shall bear all the expenses of such recover, exposure, observation, inspection and testing and of satisfactory reconstruction including compensation for additional professional services and re-testing, and an appropriate deductive change order shall be issued.

All quality assurance costs associated with replacing or otherwise correcting any work item determined to be unacceptable shall be borne by the Contractor.

For the purpose of this subsection, the term “reasonably close conformity” shall not be construed as waiving the Contractor's responsibility to complete the work in accordance with the contract, plans, and specifications. The term shall not be construed as waiving the Engineer's right to insist on strict compliance with the requirements of the contract, plans, and specifications during the Contractor's prosecution of the work, when, in the Engineer's opinion, such compliance is essential to provide an acceptable finished portion of the work.

For the purpose of this subsection, the term “reasonably close conformity,” is also intended to provide the Engineer with the authority to use good engineering judgment in his determinations as to acceptance of work that is not in strict conformity but will provide a finished product equal to or better than that intended by the requirements of the contract, plans and specifications.

50-03 COORDINATION OF CONTRACT, PLANS, AND SPECIFICATIONS. All specifications, accompanying plans, all provisions, change orders, and supplemental agreements are intended to work together and be interpreted as a whole.

Numerical dimensions govern over scaled dimensions. Special provisions govern over plans (including general notes), which govern over standard specifications and special specifications. Job-specific plan sheets govern over standard plan sheets.

Notify the Engineer promptly of any omissions, errors, or discrepancies discovered so that necessary corrections and interpretations can be made. Failure to promptly notify the Engineer will constitute a waiver of all claims for misunderstandings or ambiguities that result from the errors, omissions, or discrepancies discovered.

50-04 COOPERATION OF CONTRACTOR. The Contractor will be supplied with two copies each of the plans and specifications. He shall have available on the work at all times one copy each of the plans and specifications. The Contractor, for the cost of reproduction, may obtain additional copies of plans and specifications.

The Contractor shall give constant attention to the work to facilitate the progress thereof, and he shall cooperate with the Engineer and his inspectors and with other contractors in every way possible. The Engineer shall allocate the work and designate the sequence of construction in case of controversy between contractors. The Contractor shall have a competent superintendent on the work at all times who is fully authorized as his agent on the work. The superintendent shall be capable of reading and thoroughly understanding the plans and specifications and shall receive and fulfill instructions from the Engineer or his authorized representative.

50-05 COOPERATION BETWEEN CONTRACTORS. TxDOT reserves the right to contract for and perform other or additional work on or near the work covered by this contract.

When separate contracts are let within the limits of any one project, each Contractor shall conduct his work so as not to interfere with or hinder the progress of completion of the work being performed by other Contractors. Contractors working on the same project shall cooperate with each other as directed.

The Contractor shall arrange his work and shall place and dispose of the materials being used so as not to interfere with the operations of the other Contractors within the limits of the same project. He shall join his work with that of the others in an acceptable manner and shall perform it in proper sequence to that of the others.

50-06 CONSTRUCTION LAYOUT AND STAKES. The Engineer shall establish horizontal and vertical control only. The Contractor must establish all layouts required for the construction of the work. Such stakes and markings, as the Engineer may set for either his own or the Contractor's guidance, shall be preserved by the Contractor. In case of negligence on the part of the Contractor, or his employees, resulting in the destruction of such stakes or markings, an amount equal to the cost of replacing the same may be deducted from subsequent estimates due the Contractor at the discretion of the Engineer.

50-07 AUTOMATICALLY CONTROLLED EQUIPMENT. Whenever batching or mixing plant equipment is required to be operated automatically under the contract and a breakdown or malfunction of the automatic controls occurs, the equipment may be operated manually or by other methods for a period 48 hours following the breakdown or malfunction, provided this method of operations will produce results which conform to all other requirements of the contract.

50-08 AUTHORITY AND DUTIES OF INSPECTORS. Inspectors (resident project representatives) representing the Engineer by TxDOT shall be authorized to inspect all work done and all material furnished. Such inspection may extend to all or any part of the work and to the preparation, fabrication, or manufacture of the materials to be used. RPRs are not authorized to revoke, alter, or waive any provision of the contract, issue instructions contrary to the plans and specifications, or to act as foreman for the Contractor.

RPRs are authorized to notify the Contractor or his representatives of any failure of the work or materials to conform to the requirements of the contract, plans, or specifications and to reject such nonconforming materials in question until such issues can be referred to the Engineer for his decision.

RPRs are authorized to approve periodic contractor pay requests. Such approvals may be subsequently amended by the engineer.

50-09 INSPECTION OF THE WORK. All materials and each part or detail of the work shall be subject to inspection by the Engineer. The Engineer shall be allowed access to all parts of the work and shall be furnished with such information and assistance by the Contractor as is required to make a complete and detailed inspection.

If the Engineer requests it, the Contractor, at any time before acceptance of the work, shall remove or uncover such portions of the finished work as may be directed. After examination, the Contractor shall restore said portions of the work to the standard required by the specifications. Should the work thus exposed or examined prove acceptable, the uncovering, or removing, and the replacing of the covering or making good of the parts removed, will be paid for as extra work; but should the work so exposed or examined prove

unacceptable, the uncovering, or removing, and the replacing of the covering or making good of the parts removed, will be at the Contractor's expense.

Any work done or materials used without supervision or inspection by an authorized representative of TxDOT may be ordered removed and replaced at the Contractor's expense unless TxDOT's representative failed to inspect after having been given reasonable notice in writing that the work was to be performed**.**

Should the contract work include relocation, adjustment, or any other modification to existing facilities, not the property of the (contract) owner, authorized representatives of Owner/TxDOTs of such facilities shall have the right to inspect such work. Such inspection shall in no sense make any facility owner a party to the contract, and shall in no way interfere with the rights of the parties to this contract.

50-10 REMOVAL OF UNACCEPTABLE AND UNAUTHORIZED WORK. All work which does not conform to the requirements of the contract, plans, and specifications will be considered unacceptable, unless otherwise determined acceptable by the Engineer as provided in the subsection titled CONFORMITY WITH PLANS AND SPECIFICATIONS of this section.

Unacceptable work, whether the result of poor workmanship, use of defective materials, damage through carelessness, or any other cause found to exist prior to the final acceptance of the work, shall be removed immediately and replaced in an acceptable manner in accordance with the provisions of the subsection titled CONTRACTOR'S RESPONSIBILITY FOR WORK of Section 70.

Work done contrary to the instructions of the Engineer, work done beyond the lines shown on the plans or as given, except as herein specified, or any extra work done without authority, will be considered as unauthorized and will not be paid for under the provisions of the contract. Work so done may be ordered removed or replaced at the Contractor's expense.

Upon failure on the part of the Contractor to comply herein with any order of the Engineer made under the provisions of this subsection, the Engineer will have authority to cause unacceptable work to be remedied or removed and replaced and unauthorized work to be removed and to deduct the costs from any monies due or to become due the Contractor.

50-11 LOAD RESTRICTIONS. The Contractor shall comply with all load restrictions in the hauling of materials on public roads and airport property beyond the limits of the work. A special permit will not relieve the Contractor of liability for damage that may result from the moving of material or equipment.

The operation of equipment of such weight or so loaded as to cause damage to structures or to any other type of construction will not be permitted. Hauling of materials over the base course or surface course under construction shall be limited as directed. No loads will be permitted on a concrete pavement, base, or structure before the expiration of the curing period. The Contractor shall be responsible for all damage done by his hauling equipment

and shall correct such damage at his own expense.

50-12 MAINTENANCE DURING CONSTRUCTION. The Contractor shall maintain the work during construction and until the work is accepted. This maintenance shall constitute continuous and effective work prosecuted day by day, with adequate equipment and forces so that the work is maintained in satisfactory condition at all times.

In the case of a contract for the placing of a course upon a course or sub-grade previously constructed, the Contractor shall maintain the previous course or sub-grade during all construction operations.

All costs of maintenance work during construction and before the project is accepted shall be included in the unit prices bid on the various contract items, and the Contractor will not be paid an additional amount for such work.

50-13 FAILURE TO MAINTAIN THE WORK. Should the Contractor at any time fail to maintain the work as provided in the subsection titled MAINTENANCE DURING CONSTRUCTION of this section, the Engineer or RPR shall immediately notify the Contractor of such noncompliance. Such notification shall specify a reasonable time within which the Contractor shall be required to remedy such unsatisfactory maintenance condition. The time specified will give due consideration to the ugency that exists.

Should the Contractor fail to respond to the Engineer's notification, the Engineer may suspend any work necessary for the Owner or TxDOT to correct such unsatisfactory maintenance condition, depending on t he exigency that exists. Any maintenance cost incurred by the Owner or TxDOT shall be deducted from monies due or to become due the Contractor.

50-14 PARTIAL ACCEPTANCE. If at any time during the prosecution of the project the Contractor substantially completes a usable unit or portion of the work, the occupancy of which will benefit TxDOT and the Sponsor, he may request the Engineer to make final inspection of that unit. If the Engineer finds upon i nspection that the unit has been satisfactorily completed in compliance with the contract, he may accept it as being completed, and the Contractor may be relieved of further responsibility for that unit. Such partial acceptance and beneficial occupancy by the Sponsor shall not void or alter any provision of the contract.

50-15 FINAL ACCEPTANCE. Upon due notice from the Contractor of presumptive completion of the entire project, the Engineer and owner will make an inspection. If all construction provided for and contemplated by the contract is found to be completed in accordance with the contract, plans, and specifications, such inspection shall constitute the final inspection. The Engineer shall notify the Contractor in writing of final acceptance as of the date of the final inspection.

If, however, the inspection discloses any work, in whole or in part, as being unsatisfactory, the Engineer will give the Contractor the necessary instructions for correction of same and the Contractor shall immediately comply with and execute such instructions. Upon

correction of the work, another inspection will be made which shall constitute the final inspection, provided the work has been satisfactorily completed. In such event, the Engineer will make the final acceptance and notify the Contractor in writing of this acceptance as of the date of final inspection.

50-16 CLAIMS FOR ADJUSTMENT AND DISPUTES. If for any reason the Contractor deems that additional compensation is due him for work or materials not clearly provided for in the contract, plans, or specifications or previously authorized as extra work, he shall notify the Engineer in writing of his intention to claim such additional compensation before he begins the work on which he bases the claim. If such notification is not given or the Engineer is not afforded proper opportunity by the Contractor for keeping strict account of actual cost as required, then the Contractor hereby agrees to waive any claim for such additional compensation. Such notice by the Contractor and the fact that the Engineer has kept account of the cost of the work shall not in any way be construed as proving or substantiating the validity of the claim. When the work on which the claim for additional compensation is based has been completed, the Contractor shall, within l0 calendar days, submit his written claim to the Engineer who will present it to TxDOT for consideration.

Nothing in this subsection shall be construed as a waiver of the Contractor's right to dispute final payment based on differences in measurements or computations.

50-17 COST REDUCTION INCENTIVE. The provisions of this subsection will apply only to contracts awarded to the lowest bidder pursuant to competitive bidding.

On projects with original contract amounts in excess of $100,000, the Contractor may submit to the Engineer, in writing, bids for modifying the plans, specifications or other requirements of the contract for the sole purpose of reducing the cost of construction. The cost reduction bid shall not impair, in any manner, the essential functions or characteristics of the project, including but not limited to service life, economy of operation, ease of maintenance, desired appearance, design and safety standards. This provision shall not apply unless the bid submitted is specifically identified by the Contractor as being presented for consideration as a value engineering bid.

Not eligible for cost reduction bids are changes in the basic design of a pavement type, runway and taxiway lighting, visual aids, hydraulic capacity of drainage facilities, or changes in grade or alignment that reduce the geometric or functional standards of the project.

As a minimum, the Contractor with each bid shall submit the following information:

a. A description of both existing contract requirements for performing the work and the proposed changes, with a discussion of the comparative advantages and disadvantages of each;

b. An itemization of the contract requirements that must be changed if the bid is adopted;

c. A detailed estimate of the cost of performing the work under the existing contract and under the proposed changes;

d. A statement of the time by which a change order or supplemental agreement adopting the bid must be issued;

e. A statement of the effect adoption of the bid will have on the time for completion of the contract; and

f. The contract items of work affected by the proposed changes, including any quantity variation attributable to them.

The Contractor may withdraw, in whole or in part, any cost reduction bid not accepted by the Engineer, within the period specified in the bid. The provisions of this subsection shall not be construed to require the Engineer to consider any cost reduction bid that may be submitted.

The Contractor shall continue to perform the work in accordance with the requirements of the contract until a change order or supplemental agreement incorporating the cost reduction bid has been issued. If a change order or supplemental agreement has not been issued by the date upon which the Contractor's cost reduction bid specifies that a decision should be made, or such other date as the Contractor may subsequently have requested in writing, such cost reduction bid shall be deemed rejected.

The Engineer shall be the sole judge of the acceptability of a cost reduction bid and of the estimated net savings from the adoption of all or any part of such bid. In determining the estimated net savings, the Engineer may disregard the contract bid prices if, in the Engineer's judgment such prices do not represent a fair measure of the value of the work to be performed or deleted.

TxDOT may require the Contractor to share in TxDOT's costs of investigating a cost reduction bid submitted by the Contractor as a condition of considering such bid. Where such a condition is imposed, the Contractor shall acknowledge acceptance of it in writing. Such acceptance shall constitute full authority for TxDOT to deduct the cost of investigating a cost reduction bid from amounts payable to the Contractor under the contract.

If the Contractor's cost reduction bid is accepted in whole or in part, such acceptance will be by a contract change order or supplemental agreement that shall specifically state that it is executed pursuant to this subsection. Such change order shall incorporate the changes in the plans and specifications which are necessary to permit the cost reduction bid or such part of it as has been accepted and shall include any conditions upon which the Engineer's approval is based. The change order or supplemental agreement shall also set forth the estimated net savings attributable to the cost reduction bid. The net savings shall be determined as the difference in costs between the original contract costs for the involved work items and the costs occurring as a result of the proposed change. The change order

or supplemental agreement shall also establish the net savings agreed upon and shall provide for adjustment in the contract price that will divide the net savings equally between the Contractor and TxDOT.

The Contractor's 50 percent share of the net savings shall constitute full compensation to the Contractor for the cost reduction bid and the performance of the work.

Acceptance of the cost-reduction bid and performance of the cost-reduction work shall not extend the time of completion of the contract unless specifically provided for in the contract change order or supplemental agreement.

50-18 WARRANTY. The contractor will warrant all work performed for one year from the final acceptance date. See Section 70-14, Contractor's Responsibility for Work, paragraph D for contractors responsibility for warranty work.

END OF SECTION 50

SECTION 60

CONTROL OF MATERIALS

60-01 SOURCE OF SUPPLY AND QUALITY REQUIREMENTS. The materials used on the work shall conform to the requirements of the contract, plans, and specifications. Unless otherwise specified, such materials that are manufactured or processed shall be new (as compared to used or reprocessed).

In order to expedite the inspection and testing of materials, the Contractor shall furnish complete statements to the Engineer as to the origin, composition, and manufacture of all materials to be used in the work. Such statements shall be furnished promptly after execution of the contract but in all cases, prior to delivery of such materials.

At the Engineer's option, materials may be approved at the source of supply before delivery is stated. If it is found after trial those sources of supply for previously approved materials do not produce specified products, the Contractor shall furnish materials from other sources.

The Contractor shall furnish airport lighting equipment that conforms to the requirements of cited materials specifications. In addition, where a FAA specification for airport lighting equipment is cited in the plans or specifications, the Contractor shall furnish such equipment that is:

a. Listed in FAA Advisory Circular (AC) 150/5345-1, Approved Airport Equipment, that is in effect on the date of advertisement; and,

b. Produced by the manufacturer qualified (by FAA) to produce such specified and listed equipment.

60-02 SAMPLES, TESTS, AND CITED SPECIFICATIONS. All materials used in the work shall be inspected, tested, and approved by the Engineer before incorporation in the work. Any work in which untested materials are used without approval or written permission of the Engineer shall be performed at the Contractor's risk. Materials found to be unacceptable and unauthorized will not be paid for and, if directed by the Engineer, shall be removed at the Contractor's expense. Unless otherwise designated, tests in accordance with the cited standard methods of AASHTO or ASTM that are current on the date of advertisement for bids will be made by and at the expense of the Engineer. A qualified representative of TxDOT will take samples. All materials being used are subject to inspection, test, or rejection at any time prior to or during incorporation into the work. Copies of all tests will be furnished to the Contractor's representative at his request.

60-03 CERTIFICATION OF COMPLIANCE. The Engineer may permit the use, prior to sampling and testing, of certain materials or assemblies when accompanied by manufacturer's certificates of compliance stating that such materials or assemblies fully comply with the requirements of the contract. The manufacturer shall sign the certificate. Each lot of such materials or assemblies delivered to the work must be

accompanied by a certificate of compliance in which the lot is clearly identified.

Materials or assemblies used on the basis of certificates of compliance may be sampled and tested at any time and if found not to be in conformity with contract requirements will be subject to rejection whether in place or not.

The form and distribution of certificates of compliance shall be as approved by the Engineer.

When a material or assembly is specified by "brand name or equal" and the Contractor elects to furnish the specified "brand name," the Contractor shall be required to furnish the manufacturer's certificate of compliance for each lot of such material or assembly delivered to the work. Such certificate of compliance shall clearly identify each lot delivered and shall certify as to:

a. Conformance to the specified performance, testing, quality or dimensional requirements; and,

b. Suitability of the material or assembly for the use intended in the contract work.

Should the Contractor propose to furnish an "or equal" material or assembly, he shall furnish the manufacturer's certificates of compliance as herein before described for the specified brand name material or assembly. However, the Engineer shall be the sole judge as to whether the proposed "or equal" is suitable for use in the work.

The Engineer reserves the right to refuse permission for use of materials or assemblies on the basis of certificates of compliance.

60-04 PLANT INSPECTION. The Engineer or his authorized representative may inspect, at its source, any specified material or assembly to be used in the work. Manufacturing plants may be inspected from time to time for the purpose of determining compliance with specified manufacturing methods or materials to be used in the work and to obtain samples required for his acceptance of the material or assembly.

Should the Engineer conduct plant inspections, the following conditions shall exist:

a. The Engineer shall have the cooperation and assistance of the Contractor and the producer with whom he has contracted for materials.

b. The Engineer shall have full entry at all reasonable times to such parts of the plant that concern the manufacture or production of the materials being furnished.

c. If required by the Engineer, the Contractor shall arrange for adequate office or working space that may be reasonably needed for conducting plant inspections. Office or working space should be conveniently located with respect to the plant.

It is understood and agreed that the Engineer shall have the right to retest any material which has been tested and approved at the source of supply after it has been delivered to the site. The Engineer shall have the right to reject only material which, when re-tested, does not meet the requirements of the contract, plans, or specifications.

60-05 ENGINEER'S FIELD OFFICE AND LABORATORY. When specified and provided for as a contract item, the Contractor shall furnish a building for the exclusive use of the Engineer as a field office and field testing laboratory. The building shall be furnished and maintained by the Contractor as specified herein and shall become property of the Contractor when the contract work is completed.

60-06 STORGE OF MATERIALS. Materials shall be so stored as to assure the preservation of their quality and fitness for the work. Stored materials, even though approved before storage, may again be inspected prior to their use in the work. Stored materials shall be located so as to facilitate their prompt inspection. The Contractor shall coordinate the storage of all materials with the Engineer. Materials to be stored on airport property shall not create an obstruction to air navigation nor shall they interfere with the free and unobstructed movement of aircraft. Unless otherwise shown on the plans, the storage of materials and the location of the Contractor's plant and parked equipment or vehicles shall be as directed by the Engineer. Private property shall not be used for storage purposes without written permission of TxDOT or lessee of such property. The Contractor shall make all arrangements and bear all expenses for the storage of materials on private property. Upon request, the Contractor shall furnish the Engineer a copy of the property owner's permission.

All storage sites on private or airport property shall be restored to their original condition by the Contractor at his entire expense, except as otherwise agreed to (in writing) by TxDOT or lessee of the property.

60-07 UNACCEPTABLE MATERIALS. Any material or assembly that does not conform to the requirements of the contract, plans, or specifications shall be considered unacceptable and shall be rejected. The Contractor shall remove any rejected material or assembly from the site of the work, unless otherwise instructed by the Engineer.

No rejected material or assembly, the defects of which have been corrected by the Contractor, shall be returned to the site of the work until such time as the Engineer has approved its use in the work.

60-08 OWNER FURNISHED MATERIALS. The Contractor shall furnish all materials required to complete the work, except those specified herein (if any) to be furnished by the Owner or TxDOT. Owner-furnished materials shall be made available to the Contractor at the location specified herein.

All costs of handling, transportation from the specified location to the site of work, storage, and installing owner-furnished materials shall be included in the unit price bid for the contract item in which such owner-furnished material is used.

After any owner-furnished material has been delivered to the location specified, the Contractor shall be responsible for any demurrage, damage, loss, or other deficiencies that may occur during the Contractor's handling, storage, or use of such owner-furnished material. TxDOT will deduct from any monies due or to become due the Contractor any cost incurred by TxDOT in making good such loss due to the Contractor's handling, storage, or use of owner-furnished materials.

60-09 Operation and Maintenance Documentation. The Contractor shall furnish (3) three copies of all approved catalog cuts, warranties, operation instructions; maintenance data, schedules, and recommendations; parts lists, and names and addresses and telephone numbers of equipment and materials suppliers. Submittals shall be submitted, reviewed, and approved by the Engineer before final payment to the Contractor will be processed.

END OF SECTION 60

SECTION 70

LEGAL REGULATIONS AND RESPONSIBILITY TO PUBLIC

70-01 LAWS TO BE OBSERVED. The Contractor shall keep fully informed of all Federal and state laws, all local laws, ordinances, and regulations and all orders and decrees of bodies or tribunals having any jurisdiction or authority, which in any manner affect those engaged or employed on the work, or which in any way affect the conduct of the work. He shall at all times observe and comply with all such laws, ordinances, regulations, orders and decrees, and shall protect and indemnify the owner and all his/her officers, agents, or servants against any claim or liability arising from or cased on the violations of any such law, ordinance, regulation, order, or decree, whether by himself or his/her employees.

70-02 PERMITS, LICENSES, AND TAXES. The Contractor shall procure all permits and licenses, pay all charges, fees, and taxes, and give all notices necessary and incidental to the due and lawful prosecution of the work.

70-03 PATENTED DEVICES, MATERIALS, AND PROCESSES. If the Contractor is required or desires to use any design, device, material, or process covered by letters of patent or copyright, he shall provide for such use by s uitable legal agreement with the patentee or owner.

70-04 RESTORATION OF SURFACES DISTURBED BY OTHERS. TxDOT reserves the right to authorize the construction, reconstruction, or maintenance of any public or private utility service, FAA or National Oceanic and Atmospheric Administration (NOAA) facility, or a utility service of another government agency at any time during the progress of the work. To the extent that such construction, reconstruction, or maintenance has been coordinated with TxDOT, such authorized work (by others) is indicated in the Special Conditions or on the plans.

Except as listed above, the Contractor shall not permit any individual, joint venture, LLP,, or corporation to excavate or otherwise disturb such utility services or facilities located within the limits of the work without the written permission of the Engineer.

Should the Owner of a public or private utility service, FAA, or NOAA facility, or a utility service of another government agency be authorized to construct, reconstruct, or maintain such utility service or facility during the progress of the work, the Contractor shall cooperate with such owners by arranging and performing the work in this contract so as to facilitate such construction, reconstruction or maintenance by others whether or not such work by others is listed above. When ordered as extra work by the Engineer, the Contractor shall make all necessary repairs to the work, which are due to such authorized work by others, unless otherwise provided for in the contract, plans, or specifications. It is understood and agreed that the Contractor shall not be entitled to make any claim for damages due to such authorized work by others or for any delay to the work resulting from such authorized work.

70-05 FEDERAL AID PARTICIPATION. For AIP contracts, the United States Government has agreed to reimburse TxDOT for some portion of the contract costs. Such reimbursement is made from time to time upon TxDOT's (sponsor's) request to the FAA. In consideration of the United Sates Government's (FAA's) agreement with TxDOT, TxDOT has included provisions in this contract pursuant to the requirements of the Airport Improvement Act of 1982, as amended by the Airport and Airway Safety and Capacity Expansion Act of 1987, and the Rules and Regulations of the FAA that pertain to the work.

As required by the Act, the contract work is subject to the inspection and approval of duly authorized representatives of FAA, and is further subject to those provisions of the rules and regulations that are cited in the contract, plans, or specifications.

No requirement of the Act, the rules and regulations implementing the Act, or this contract shall be construed as making the Federal Government a party to the contract nor will any such requirement interfere, in any way, with the rights of either party to the contract.

70-06 SANITARY, HEALTH, AND SAFETY PROVISIONS. The Contractor shall provide and maintain in a neat, sanitary condition such accommodations for the use of his employees as may be necessary to comply with the requirements of the state and local Board of Health or of other bodies or tribunals having jurisdiction.

Attention is directed to Federal, state, and local laws, rules and regulations concerning construction safety and health standards. The Contractor shall not require any worker to work in surroundings or under conditions that are unsanitary, hazardous, or dangerous to his health or safety.

70-07 PUBLIC CONVENIENCE AND SAFETY. The Contractor shall control his operations and those of his subcontractors and all suppliers, to assure the least inconvenience to the traveling public. Under all circumstances, safety shall be the most important consideration.

The Contractor shall maintain the free and unobstructed movement of aircraft and vehicular traffic with respect to his own operations and those of his subcontractors and all suppliers in accordance with the subsection titled MAINTENANCE OF TRAFFIC of Section 40 herein before specified and shall limit such operations for the convenience and safety of the traveling public as specified in the subsection titled LIMITATION OF OPERATIONS of Section 80 hereinafter.

70-08 BARRICADES, WARNING SIGNS, AND HAZARD MARKINGS. The Contractor shall furnish, erect, and maintain all barricades, warning signs, and markings for hazards necessary to protect the public and the work. When used during periods of darkness, such barricades, warning signs, and hazard markings shall be suitably illuminated.

For vehicular and pedestrian traffic, the Contractor shall furnish, erect, and maintain barricades, warning signs, lights and other traffic control devices in reasonable conformity with the Manual of Uniform Traffic Control Devices for Streets and Highways (published by the United States Government Printing Office).

When the work requires closing an air operations area of the airport or portion of such area, the Contractor shall furnish, erect, and maintain temporary markings and associated lighting conforming to the requirements of the most current version of the FAA, Advisory Circular, Marking of Paved Areas on Airports.

The Contractor shall furnish, erect, and maintain markings and associated lighting of open trenches, excavations, temporary stock piles, and his parked construction equipment that may be hazardous to the operation of emergency fire-rescue or maintenance vehicles on the airport in reasonable conformance to the most current version of the FAA Advisory Circular, Operational Safety on Airports During Construction Activity.

The Contractor shall identify each motorized vehicle or piece of construction equipment in reasonable conformance to the most current version of the FAA Advisory Circular.

The Contractor shall furnish and erect all barricades, warning signs, and markings for hazards prior to commencing work which requires such erection and shall maintain the barricades, warning signs, and markings for hazards until their dismantling is directed by the Engineer.

Open-flame type lights shall not be permitted within the air operations areas of the airport.

70-09 USE OF EXPLOSIVES. When the use of explosives is necessary for the prosecution of the work, the Contractor shall exercise the utmost care not to endanger life or property, including new work. The Contractor shall be responsible for all damage resulting from the use of explosives.

All explosives shall be stored in a s ecure manner in compliance with all laws and ordinances, and all such storage places shall be clearly marked. Where no laws or ordinances apply, storage shall be provided satisfactory to the Engineer and, in general, not closer than 1,000 feet (300 m) from the work or from any building, road, or other place of human occupancy.

The Contractor shall notify each property owner and public utility company having structures or facilities in proximity to the site of the work of his intention to use explosives. Such notice shall be given sufficiently in advance to enable them to take such steps as they may deem necessary to protect their property from injury.

The use of electrical blasting caps shall not be permitted on or within 1,000 feet (300 m) of the airport property.

70-10 PROTECTION AND RESTORATION OF PROPERTY AND LANDSCAPE. The Contractor shall be responsible for the preservation of all public and private property, and shall protect carefully from disturbance or damage all land monuments and property markers until the Engineer has witnessed or otherwise referenced their location and shall not move them until directed.

The Contractor shall be responsible for all damage or injury to property of any character, during the prosecution of the work, resulting from any act, omission, neglect, or misconduct

in his manner or method of executing the work, or at any time due to defective work or materials, and said responsibility will not be released until the project shall have been completed and accepted.

When or where any direct or indirect damage or injury is done to public or private property by or on account of any act, omission, neglect, or misconduct in the execution of the work, or in consequence of the no execution thereof by the Contractor, he shall restore, at his own expense, such property to a condition similar or equal to that existing before such damage or injury was done, by repairing, or otherwise restoring as may be directed, or he shall make good such damage or injury in an acceptable manner.

70-11 RESPONSIBILITY FOR DAMAGE CLAIMS. The Contractor shall indemnify and hold harmless the Engineer and TxDOT and their officers, and employees from all suits actions, or claims of any character brought because of any injuries or damage received or sustained by any person, persons, or property on account of the operations of the Contractor; or on account of or in consequence of any neglect in safeguarding the work; or through use of unacceptable materials in constructing the work; or because of any act or omission, neglect, or misconduct of said Contractor; or from any claims or amounts arising or recovered under the "Worker's Compensation Act," or any other law, ordinance, order, or decree. Money due the Contractor under and by virtue of his contract as may be considered necessary by TxDOT for such purpose may be retained for the use of TxDOT or, in case no money is due, his surety may be held until such suit or suits, action or actions, claim or claims for injuries or damages as aforesaid shall have been settled and suitable evidence to that effect furnished to TxDOT, except that money due the Contractor will not be withheld when the Contractor produces satisfactory evidence that he is adequately protected by public liability and property damage insurance.

70-12 THIRD PARTY BENEFICIARY CLAUSE. It is specifically agreed between the parties executing the contract that it is not intended by any of the provisions of any part of the contract to create the public or any member thereof a third party beneficiary or to authorize anyone not a party to the contract to maintain a suit for personal injuries or property damage pursuant to the terms or provisions of the contract.

70-13 OPENING SECTIONS OF THE WORK TO TRAFFIC. Should it be necessary for the Contractor to complete portions of the contract work for the beneficial occupancy of TxDOT prior to completion of the entire contract, such "phasing" of the work shall be specified herein and indicated on the plans. When so specified, the Contractor shall complete such portions of the work on or before the date specified or as otherwise specified. The Contractor shall make his own estimate of the difficulties involved in arranging his work to permit such beneficial occupancy by TxDOT as described below:

Phase or Description
Required Date or Sequence of Owner's Beneficial Occupancy
Work Shown on Plan Sheet

Upon completion of any portion of the work listed above, such portion shall be accepted by TxDOT in accordance with the subsection titled PARTIAL ACCEPTANCE of Section 50.

No portion of the work may be opened by the Contractor for public use until ordered by the Engineer in writing. Should it become necessary to open a portion of the work to public traffic on a temporary or intermittent basis, such openings shall be made when, in the opinion of the Engineer, such portion of the work is in an acceptable condition to support the intended traffic. Temporary or intermittent openings are considered to be inherent in the work and shall not constitute either acceptance of the portion of the work so opened or a waiver of any provision of the contract. Any damage to the portion of the work so opened that is not attributable to traffic that is permitted by TxDOT shall be repaired by the Contractor at his expense.

The Contractor shall make his own estimate of the inherent difficulties involved in completing the work under the conditions herein described and shall not claim any added compensation by reason of delay or increased cost due to opening a portion of the contract work.

70-14 CONTRACTOR'S RESPONSIBILITY FOR WORK. Until the Engineer's final written acceptance of the entire completed work, excepting only those portions of the work accepted in accordance with the subsection titled PARTIAL ACCEPTANCE of Section 50, t he Contractor shall have the charge and care thereof and shall take every precaution against injury or damage to any part due to the action of the elements or from any other cause, whether arising from the execution or not executing the work. The Contractor shall rebuild, repair, restore, and make good all injuries or damages to any portion of the work occasioned by any of the above causes before final acceptance and shall bear the expense thereof except damage to the work due to unforeseeable causes beyond the control of and without the fault or negligence of the Contractor, including but not restricted to acts of God such as earthquake, tidal wave, tornado, hurricane or other cataclysmic phenomenon of nature, or acts of the public enemy or of government authorities.

If the work is suspended for any cause whatever, the Contractor shall be responsible for the work and shall take such precautions necessary to prevent damage to the work. The Contractor shall provide for normal drainage and shall erect necessary temporary structures, signs, or other facilities at his expense. During such period of suspension of work, the Contractor shall properly and continuously maintain in an acceptable growing condition all living material in newly established planting, seeding, and sodding furnished under his contract, and shall take adequate precautions to protect new tree growth and other important vegetative growth against injury.

Neither the final certificate of payment nor any provision in the Contract nor partial or entire use of the Improvements embraced in this contract by the Sponsor or the public shall constitute an acceptance of work not done in accordance with the Contract or relieve the Contractor of liability in respect to any express warranties or responsibility for faulty materials or workmanship. The Contractor shall promptly remedy any defects in the work and pay for any damage to other work resulting therefrom which appear within a period of twelve (12) months from the date of final acceptance of the work.

70-15 CONTRACTOR'S RESPONSIBILITY FOR UTILITY SERVICE AND FACILITIES OF OTHERS. As provided in the subsection titled RESTORATION OF SURFACES DISTURBED BY OTHERS of this section, the Contractor shall cooperate with the owner of

any public or private utility service, FAA or NOAA, or a utility service of another government agency that may be authorized by TxDOT to construct, reconstruct or maintain such utility services or facilities during the progress of the work. In addition, the Contractor shall control his operations to prevent the unscheduled interruption of such utility services and facilities.

To the extent that such public or private utility services, FAA, or NOAA facilities, or utility services of another governmental agency are known to exist within the limits of the contract work, the approximate locations have been indicated on the plans and TxDOTs are indicated as follows:

Utility Service or Facility
Person to Contract (Name, Title, Address, & Phone)
Owner's Emergency Contact (Phone)

It is understood and agreed that the Engineer does not guarantee the accuracy or the completeness of the location information relating to existing utility services, facilities, or structures that may be shown on the plans or encountered in the work. Any inaccuracy or omission in such information shall not relieve the Contractor of his responsibility to protect such existing features from damage or unscheduled interruption of service.

It is further understood and agreed that the Contractor shall, upon execution of the contract, notify owners of all utility services or other facilities of his plan of operations. Such notification shall be in writing addressed to the individual(s) indicated on the plans. A copy of each notification shall be given to the Engineer.

In addition to the general written notification herein before provided, it shall be the responsibility of the Contractor to keep such individual owners advised of changes in his plan of operations that would affect such owners.

Prior to commencing the work in the general vicinity of an existing utility service or facility, the Contractor shall again notify each such owner of his plan of operation. If, in the Contractor's opinion, the Engineer's assistance is needed to locate the utility service or facility or the presence of a representative of the Engineer is desirable to observe the work, such advice should be included in the notification. Such notification shall be given by the most expeditious means to reach the utility owner's PERSON TO CONTACT no later than two normal business days prior to the Contractor's commencement of operations in such general vicinity. The Contractor shall furnish a written summary of the notification to the Engineer.

The Contractor's failure to give the two day's notice as stated above shall be cause for the Engineer to suspend the Contractor's operations in the general vicinity of a utility service or facility.

Where the outside limits of an underground utility service have been located and staked on the ground, the Contractor shall be required to use excavation methods acceptable to the Engineer within 3 feet (90 cm) of such outside limits at such points as may be required to ensure protection from damage due to the Contractor's operations.

Should the Contractor damage or interrupt the operation of a utility service or facility by accident or otherwise, he shall immediately notify the proper authority and the Engineer and shall take all reasonable measures to prevent further damage or interruption of service. The Contractor, in such events, shall cooperate with the utility service or facility owner and the Engineer continuously until such damage has been repaired and service restored to the satisfaction of the utility or facility owner.

The Contractor shall bear all costs of damage and restoration of service to any utility service or facility due to his operations whether or not due to negligence or accident. The contract owner reserves the right to deduct such costs from any monies due or which may become due the Contractor, or his surety.

70-16 FURNISHING RIGHTS-OF-WAY. TxDOT will be responsible for furnishing all rights-of-way upon which the work is to be constructed in advance of the Contractor's operations.

70-17 PERSONAL LIABILITY OF PUBLIC OFFICIALS. In carrying out any of the contract provisions or in exercising any power or authority granted to him by this contract, there shall be no liability upon the Engineer, his authorized representatives, or any officials of TxDOT either personally or as an official of TxDOT. It is understood that in such matters they act solely as agents and representatives of TxDOT.

70-18 NO WAIVER OF LEGAL RIGHTS. Upon completion of the work, TxDOT will expeditiously make final inspection and notify the Contractor of final acceptance. Such final acceptance, however, shall not preclude or stop TxDOT from correcting any measurement, estimate, or certificate made before or after completion of the work, nor shall TxDOT be precluded or stopped from recovering from the Contractor or his surety, or both, such overpayment as may be sustained, or by failure on the part of the Contractor to fulfill his obligations under the contract. A waiver on the part of TxDOT of any breach of any part of the contract shall not be held to be a waiver of any other or subsequent breach.

The Contractor, without prejudice to the terms of the contract, shall be liable to TxDOT for latent defects, fraud, or such gross mistakes as may amount to fraud, or as regards TxDOT's rights under any warranty or guaranty.

70-19 ENVIRONMENTAL PROTECTION. The Contractor shall comply with all Federal, state, and local laws and regulations controlling pollution of the environment. He shall take necessary precautions to prevent pollution of streams, lakes, ponds, and reservoirs with fuels, oils, bitumens, chemicals, or other harmful materials and to prevent pollution of the atmosphere from particulate and gaseous matter.

70-20 ARCHAEOLOGICAL AND HISTORICAL FINDINGS. Unless otherwise specified in this subsection, the Contractor is advised that the site of the work is not within any property, district, or site, and does not contain any building, structure, or object listed in the current National Register of Historic Places published by the United States Department of Interior.

Should the Contractor encounter, during his operations, any building, part of a building, structure, or object which is incongruous with its surroundings, he shall immediately cease

operations in that location and notify the Engineer. The Engineer will immediately investigate the Contractor's finding and will direct the Contractor to either resume his operations or to suspend operations as directed.

Should the Engineer order suspension of the Contractor's operations in order to protect an archaeological or historical finding, or order the Contractor to perform extra work, such shall be covered by a n appropriate contract modification (change order or supplemental agreement) as provided in the subsection titled EXTRA WORK of Section 40 and the subsection titled PAYMENT FOR EXTRA WORK AND FORCE ACCOUNT WORK of Section 90. If appropriate, the contract modification shall include an extension of contract time in accordance with the subsection titled DETERMINATION AND EXTENSION OF CONTRACT TIME of Section 80.

CERTIFICATION OF NPDES PERMIT. If a Storm Water Pollution Prevention Plan (SWP3) is included in this project, the Contractor, and all subcontractors implementing any measures identified on t he SWP3, must submit to the Engineer a signed copy of the certification statement as d escribed in **Part II, D.6 of the Texas Pollutant Eliminations Discharge System General Permit TXR150000** no later than 48 hours prior to beginning work. The Contractor must participate in a pre-construction conference before the work can begin, at which time these certifications will be required.

END OF SECTION 70

SECTION 80

PROSECUTION AND PROGRESS

80-01 SUBCONTRACTING OF CONTRACT. TxDOT will not recognize any subcontractor on the work. The Contractor shall at all times when work is in progress be represented either in person, by a qualified superintendent, or by other designated, qualified representative who is duly authorized to receive and execute orders of the Engineer.

Should the Contractor elect to assign his contract, said assignment shall be concurred in by the surety, shall be presented for the consideration and approval of TxDOT, and shall be consummated only on the written approval of TxDOT. In case of approval, the Contractor shall file copies of all subcontracts with the Engineer.

If a Storm Water Pollution Prevention Plan (SW3P) is included in this project, no subcontractor who is to implement any measure identified on the SW3P, will be approved for work until the subcontrctor has submitted a signed copy of the certification statement described in **Part II, D.6 of the Texas Pollutant Elimination Discharge System General Permit TXR 150000** no later than 48 hours prior to beginning work and the General Provision, "Certification of NPDES Permit." If an approved subcontractor does not comply with the provisions of the permit, approval may be revoked.

80-02 NOTICE TO PROCEED. The notice to proceed shall state the date on which it is expected the Contractor will begin the construction and from which date contract time will be charged. The Contractor shall begin the work to be performed under the contract not later than the effective date given by TxDOT in the written notice to proceed, but in any event, the Contractor shall notify the Engineer at least 48 hours in advance of the time actual construction operations will begin.

80-03 PROSECUTION AND PROGRESS. Unless otherwise specified, the Contractor shall submit his progress schedule for the Engineer's approval within 10 calendar or work days after the effective date of the notice to proceed. The Contractor's progress schedule, when approved by the Engineer, may be used to establish major construction operations and to check on the progress of the work. The Contractor shall provide sufficient materials, equipment, and labor to guarantee the completion of the project in accordance with the plans and specifications within the time set forth in the bid.

If the Contractor falls significantly behind the submitted schedule, the Contractor shall, upon the Engineer's request, submit a revised schedule for completion of the work within the contract time and modify his operations to provide such additional materials, equipment, and labor necessary to meet the revised schedule. Should the prosecution of the work be discontinued for any reason, the Contractor shall notify the Engineer at least 48 hour s in advance of resuming operations.

The Contractor shall not commence any actual construction prior to the date on which the notice to proceed is issued by TxDOT.

80-04 LIMITATION OF OPERATIONS. The Contractor shall control his operations and the operations of his subcontractors and all suppliers so as to provide for the free and unobstructed movement of aircraft in the AIR OPERATIONS AREAS of the airport.

When the work requires the Contractor to conduct his operations within an AIR OPERATIONS AREA of the airport, the work shall be coordinated with airport management (through the Engineer) at least 48 hours prior to commencement of such work. The Contractor shall not close an AIR OPERATIONS AREA until so authorized by the Engineer and until the necessary temporary marking and associated lighting is in place as provided in the subsection titled BARRICADES, WARNING SIGNS, AND HAZARD MARKINGS of Section 70.

When the contract work requires the Contractor to work within an AIR OPERATIONS AREA of the airport on a n intermittent basis (intermittent opening and closing of the AIR OPERATIONS AREA), the Contractor shall maintain constant communications as specified; immediately obey all instructions to vacate the AOA; immediately obey all instructions to resume work in such AOA. Failure to maintain the specified communications or to obey instructions shall be cause for suspension of the Contractor's operations in the AOA until the satisfactory conditions are provided only as indicated on the plans.

80-05 CHARACTER OF WORKERS, METHODS, AND EQUIPMENT. The Contractor shall, at all times, employ sufficient labor and equipment for prosecuting the work to full completion in the manner and time required by the contract, plans, and specifications.

All workers shall have sufficient skill and experience to perform properly the work assigned to them. Workers engaged in special work or skilled work shall have sufficient experience in such work and in the operation of the equipment required to perform the work satisfactorily.

All equipment that is proposed to be used on the work shall be of sufficient size and in such mechanical condition as to meet requirements of the work and to produce a satisfactory quality of work. Equipment used on any portion of the work shall be such that no injury to previously completed work, adjacent property, or existing airport facilities will result from its use.

When the methods and equipment to be used by the Contractor in accomplishing the work are not prescribed in the contract, the Contractor is free to use any methods or equipment that will accomplish the work in conformity with the requirements of the contract, plans, and specifications.

When the contract specifies the use of certain methods and equipment, such methods and equipment shall be used unless the Engineer authorizes others. If the Contractor desires to use a method or type of equipment other than specified in the contract, he may request authority from the Engineer to do so. The request shall be in writing and shall include a full description of the methods and equipment proposed and of the reasons for desiring to make the change. If approval is given, it will be on the condition that the Contractor will be fully responsible for producing work in conformity with contract requirements. If, after trial use of the substituted methods or equipment, the Engineer determines that the work produced does not meet contract requirements, the Contractor shall discontinue the use of the substitute method or equipment and shall complete the remaining work with the specified methods and

equipment. The Contractor shall remove any deficient work and replace it with work of specified quality, or take such other corrective action as the Engineer may direct. No change will be made in basis of payment for the contract items involved or in contract time as a result of authorizing a change in methods or equipment under this subsection.

80-06 TEMPORARY SUSPENSION OF THE WORK. The Engineer shall have the authority to suspend the work wholly, or in part, for such period or periods as he may deem necessary, due to unsuitable weather, or such other conditions as are considered unfavorable for the prosecution of the work, or for such time as is necessary due to the failure on the part of the Contractor to carry out orders given or perform any or all provisions of the contract.

In the event that the Contractor is ordered by the Engineer, in writing, to suspend work for some unforeseen cause not otherwise provided for in the contract and over which the Contractor has no control, the Contractor may be reimbursed for actual money expended on the work during the period of shutdown. No allowance will be made for anticipated profits. The period of shutdown shall be computed from the effective date of the Engineer's order to suspend work to the effective date of the Engineer's order to resume the work. Claims for such compensation shall be filed with the Engineer within the time period stated in the Engineer's order to resume work. The Contractor shall submit with his claim information substantiating the amount shown on the claim. The Engineer will forward the Contractor's claim to TxDOT for consideration. No provision of this article shall be construed as entitling the Contractor to compensation for delays due to inclement weather, for suspensions made at the request of the Contractor, or for any other delay provided for in the contract, plans, or specifications.

If it should become necessary to suspend work for an indefinite period, the Contractor shall store all materials in such manner that they will not become an obstruction or become damaged in any way. He shall take every precaution to prevent damage or deterioration of the work performed and provide for normal drainage of the work. The Contractor shall erect temporary structures where necessary to provide for traffic on, to, or from the airport.

80-07 DETERMINATION AND EXTENSION OF CONTRACT TIME. The number of calendar or working days allowed for completion of the work shall be stated in the bid and contract and shall be known as the CONTRACT TIME.

Should the contract time require extension for reasons beyond the Contractor's control, it shall be adjusted as follows:

CONTRACT TIME based on WORKING DAYS shall be calculated weekly by the Engineer. The Engineer will furnish the Contractor a copy of his weekly statement of the number of working days charged against the contract time during the week and the number of working days currently specified for completion of the contract (the original contract time plus the number of working days, if any, that have been included in approved CHANGE ORDERS or SUPPLEMENTAL AGREEMENTS covering EXTRA WORK).

The Engineer shall base his weekly statement of contract time charged on the following considerations:

a. No time shall be charged for days on which the Contractor is unable to proceed with the principal item of work under construction at the time for at least 6 hours with the normal work force employed on such principal item. Should the normal work force be on a double-shift, 12 hours shall be used. Should the normal work force be on a triple-shift, 18 hours shall apply. Conditions beyond the Contractor's control such as strikes, lockouts, unusual delays in transportation, temporary suspension of the principal item of work under construction or temporary suspension of the entire work which have been ordered by the Engineer for reasons not the fault of the Contractor, shall not be charged against the contract time.

b. The Engineer will not make charges against the contract time prior to the effective date of the notice to proceed.

c. The Engineer will begin charges against the contract time on the first working day after the effective date of the notice to proceed.

d. The Engineer will not make charges against the contract time after the date of final acceptance as defined in the subsection titled FINAL ACCEPTANCE of Section 50.

e. The Contractor will be allowed 1 week in which to file a written protest setting forth his objections to the Engineer's weekly statement. If no objection is filed within such specified time, the weekly statement shall be considered as acceptable to the Contractor.

The contract time (stated in the bid) is based on the originally estimated quantities as described in the subsection titled INTERPRETATION OF ESTIMATED BID QUANTITIES of Section 20. Should the satisfactory completion of the contract require performance of work in greater quantities than those estimated in the bid, the contract time shall be increased in the same proportion as the cost of the actually completed quantities bears to the cost of the originally estimated quantities in the bid. Such increase in contract time shall not consider either the cost of work or the extension of contract time that has been covered by change order or supplemental agreement and shall be made at the time of final payment.

CONTRACT TIME based on CALENDAR DAYS shall consist of the number of calendar days stated in the contract counting from the effective date of the notice to proceed and including all Saturdays, Sundays, holidays, and non-work days. All calendar days elapsing between the effective dates of the Engineer's orders to suspend and resume all work, due to causes not the fault of the Contractor shall be excluded.

At the time of final payment, the contract time shall be increased in the same proportion as the cost of the actually completed quantity bears to the cost of the originally estimated quantities in the bid. Such increase in the contract time shall not consider either cost of work or the extension of contract time that has been covered by a change order or supplemental agreement. Charges against the contract time will cease as of the date of final acceptance.

When the contract time is a specified completion date, it shall be the date on which all

contract work shall be substantially completed.

If the Contractor finds it impossible for reasons beyond his control to complete the work within the contract time as specified, or as extended in accordance with the provisions of this subsection, he may, at any time prior to the expiration of the contract time as extended, make a written request to the Engineer for an extension of time setting forth the reasons which he believes will justify the granting of his request. The Contractor's plea that insufficient time was specified is not a valid reason for extension of time. If the Engineer finds that the work was delayed because of conditions beyond the control and without the fault of the Contractor, he may extend the time for completion in such amount as the conditions justify. The extended time for completion shall then be in full force and effect, the same as though it was the original time for completion.

80-08 FAILURE TO COMPLETE ON TIME. For each calendar day or working day, as specified in the contract, that any work remains uncompleted after the contract time (including all extensions and adjustments as provided in the subsection titled DETERMINATION AND EXTENSION OF CONTRACT TIME of this Section) the sum specified in the contract and bid as liquidated damages will be deducted from any money due or to become due the Contractor or his surety. Such deducted sums shall not be deducted as a penalty but shall be considered as liquidation of a reasonable portion of damages that will be incurred by TxDOT should the Contractor fail to complete the work in the time provided in his contract. Permitting the Contractor to continue and finish the work or any part of it after the time fixed for its completion, or after the date to which the time for completion may have been extended, will in no way operate as a wavier on the part of TxDOT of any of its rights under the contract.

80-09 ABANDONMENT OF WORK OR DEFAULT OF CONTRACT. The Engineer, with the approval of TxDOT, may declare the Contractor to be in default of the Contract if the Contractor:

a. fails to begin the work within the number of days specified

b. fails to prosecute the work to assure completion within the number of days specified

c. fails to perform the work in accordance with the Contract requirements

d. neglects or refuses to remove and replace rejected materials or unacceptable work

e. discontinues the prosecution of the work without the Engineer’s approval

f. makes an unauthorized assignment

g. fails to resume work that has been discontinued within a reasonable number of days after notice to do so

h. is uncooperative, disruptive or threatening or

i. fails to conduct the work in an acceptable manner.

If any of these conditions occur, the Engineer will give notice in writing to the Contractor and the Surety of the intent to declare the Contractor in default. If the Contractor does not proceed as directed within 10 days after the notice, TxDOT may upon written notice declare the Contractor to be in default of the Contract. TxDOT will also provide written notice of default to the Surety. Working day charges will continue until completion of the Contract. The Contractor may also be subject to sanctions under the TAC. TxDOT will determine the method used for the completion of the remaining work as follows:

1. **Contracts without Performance Bonds.** TxDOT will determine the most expeditious and efficient way to complete the work, and recover damages from the Contractor.

2. **Contracts with Performance Bonds.** TXDOT will, without violating the Contract, demand that the Contractor's Surety complete the remaining work in accordance with the terms of the original Contract. A completing Contractor will be considered a subcontractor of the Surety. TxDOT reserves the right to approve or reject proposed subcontractors. Work may resume after TxDOT receives and approves certificates of insurance as required in Provision 30-10 "Certificate of Insurance." Certificates of insurance may be issued in the name of the completing Contractor. The Surety is responsible for making every effort to expedite the resumption of work and completion of the Contract. TxDOT may complete the work using any or all materials at the work locations that it deems suitable and acceptable. Any costs incurred by TxDOT for the completion of the work under the Contract will be the responsibility of the Surety. From the time of notification of the default until work resumes (either by the Surety or TxDOT).

   TxDOT will maintain traffic control devices and will do a ny other work it deems necessary, unless otherwise agreed upon by TxDOT and the Surety. All costs associated with this work will be deducted from money due to the Surety. TxDOT will hold all money earned but not disbursed by the date of default. Upon resumption of the work after the default, all payments will be made to the Surety. All costs and charges incurred by TxDOT as a result of the default, including the cost of completing the work under the Contract, costs of maintaining traffic control devices, costs for other work deemed necessary, and any applicable liquidated damages or disincentives will be deducted from money due the Contractor for completed work. If these costs exceed the sum that would have been payable under the Contract, the Surety will be liable and pay TxDOT the balance of these costs in excess of the Contract price. In case the costs incurred by TxDOT are less than the amount that would have been payable under the Contract if the work had been completed by the Contractor, TxDOT will be entitled to retain the difference. TxDOT approval of all subcontractors continues to be required. DBE/HUBs must continue to be used in accordance with the commitments previously approved by TxDOT. If it is determined, after the Contractor is declared in default, that the Contractor was not in default, the rights and obligations of the parties will be the same as if the termination had been issued for the convenience of the public as provided in Provision 80-10, "Termination of Contract."

80-10 TERMINATION OF CONTRACT. TxDOT may terminate the Contract in whole or in part whenever:

a. the Contractor is prevented from proceeding with the work as a direct result of an executive order of the President of the United States or the Governor of the State;

b. the Contractor is prevented from proceeding with the work due to a national emergency, or when the work to be performed under the Contract is stopped, directly or indirectly, because of the freezing or diversion of materials, equipment or labor as the result of an order or a proclamation of the President of the United States;

c. the Contractor is prevented from proceeding with the work due to an order of any federal authority;

d. the Contractor is prevented from proceeding with the work by reason of a preliminary, special, or permanent restraining court order where the issuance of the restraining order is primarily caused by acts or omissions of persons or agencies other than the Contractor; or

e. TxDOT determines that termination of the Contract is in the best interest of the State or the public. This includes but is not limited to the discovery of significant hazardous material problems, right of way acquisition problems, or utility conflicts that would cause substantial delays or expense to the Contract.

Procedures and Submittals. The Engineer will provide written notice to the Contractor of termination specifying the extent of the termination and the effective date. Upon notice, immediately proceed in accordance with the following:

a. stop work as specified in the notice;

b. place no further subcontracts or orders for materials, services, or facilities, except as necessary to complete a critical portion of the Contract, as approved by the Engineer;

c. terminate all subcontracts to the extent they relate to the work terminated;

d. complete performance of the work not terminated;

e. settle all outstanding liabilities and termination settlement proposals resulting from the termination for public convenience of the Contract;

f. create an inventory report, including all acceptable materials and products obtained for the Contract that have not been incorporated in the work that was terminated (include in the inventory report a description, quantity, location, source, cost, and payment status for each of the acceptable materials and products); and

g. take any action necessary, or that the Engineer may direct, for the protection and preservation of the materials and products related to the Contract that are in the possession of the Contractor and in which TxDOT has or may acquire an

interest.

Settlement Provisions. Within 60 calendar days of the date of the notice of termination, submit a final termination settlement proposal, unless otherwise approved. The Engineer will prepare a ch ange order that reduces the affected quantities of work and adds acceptable costs for termination. No claim for loss of anticipated profits will be considered. TxDOT will pay reasonable and verifiable termination costs including:

a. all work completed at the unit bid price and partial payment for incomplete work;

b. the percentage of "Mobilization," equivalent to the percentage of work complete or actual cost that can be supported by cost records, whichever is greater;

c. expenses necessary for the preparation of termination settlement proposals and support data;

d. the termination and settlement of subcontracts;

e. storage, transportation, restocking, and other costs incurred necessary for the preservation, protection, or disposition of the termination inventory; and

f. other expenses acceptable to TxDOT.

END OF SECTION 80

SECTION 90

MEASUREMENT AND PAYMENT

90-01 MEASUREMENT OF QUANTITIES. All work completed under the contract will be measured by the Engineer, or his authorized representatives, using United States Customary Units of Measurement or the International System of Units.

The method of measurement and computations to be used in determination of quantities of material furnished and of work performed under the contract will be those methods generally recognized as conforming to good engineering practice.

Unless otherwise specified, longitudinal measurements for area computations will be made horizontally, and no deductions will be made for individual fixtures (or leave-outs) having an area of 9 square feet (0.8 square meter) or less. Unless otherwise specified, transverse measurements for area computations will be the neat dimensions shown on the plans or ordered in writing by the Engineer.

Structures will be measured according to neat lines shown on the plans or as altered to fit field conditions.

Unless otherwise specified, all contract items which are measured by the linear foot such as electrical ducts, conduits, pipe culverts, under-drains, and similar items shall be measured parallel to the base or foundation upon which such items are placed.

In computing volumes of excavation the average end area method or other acceptable methods will be used.

The thickness of plates and galvanized sheet used in the manufacture of corrugated metal pipe, metal plate pipe culverts and arches, and metal cribbing will be specified and measured in decimal fraction of inches.

The term "ton" will mean the short ton consisting of 2,000 pounds (907 kilograms) avoirdupois. All materials that are measured or proportioned by weights shall be weighed on accurate, approved scales by competent, qualified personnel at locations designated by the Engineer. If material is shipped by rail, the car weight may be accepted provided that only the actual weight of material is paid for. However, car weights will not be acceptable for material to be passed through mixing plants. Trucks used to haul material being paid for by weight shall be weighed empty daily at such times as the Engineer directs, and each truck shall bear a plainly legible identification mark.

Materials to be measured by volume in the hauling vehicle shall be hauled in approved vehicles and measured therein at the point of delivery. Vehicles for this purpose may be of any size or type acceptable to the Engineer, provided that the body is of such shape that the actual contents may be readily and accurately determined. All vehicles shall be loaded to at least their water level capacity, and all loads shall be leveled when the vehicles arrive at the point of delivery.

When requested by the Contractor and approved by the Engineer in writing, material specified to be measured by the cubic yard (cubic meter) may be weighed, and such weights will be converted to cubic yards (cubic meters) for payment purposes. Factors for conversion from weight measurement to volume measurement will be determined by the Engineer and shall be agreed to by the Contractor before such method of measurement of pay quantities is used.

Bituminous materials will be measured by the gallon (liter) or ton (kilogram). When measured by volume, such volumes will be measured at 60 F (15 C) or will be corrected to the volume at 60 F (15 C) using ASTM D 1250 for asphalt or ASTM D 633 for tars.

Net certified scale weights or weights based on certified volumes in the case of rail shipments will be used as a basis of measurement, subject to correction when bituminous material has been lost from the car or the distributor, wasted, or otherwise not incorporated in the work.

When bituminous materials are shipped by truck or transport, net certified weights by volume, subject to correction for loss or foaming, may be used for computing quantities.

Cement will be measured by the ton (kilogram) or hundredweight (kilogram).

Timber will be measured by the thousand feet board measure (M.F.B.M.) actually incorporated in the structure. Measurement will be based on nominal widths and thickness and the extreme length of each piece.

The term “lump sum” when used, as an item of payment will mean complete payment for the work described in the contract.

When a complete structure or structural unit (in effect, “lump sum” work) is specified as the unit of measurement, the unit will be construed to include all necessary fittings and accessories.

Rental of equipment will be measured by time in hours of actual working time and necessary traveling time of the equipment within the limits of the work. Special equipment ordered by the Engineer in connection with force account work will be measured as agreed in the change order or supplemental agreement authorizing such force account work as provided in the subsection titled PAYMENT FOR EXTRA AND FORCE ACCOUNT WORK of this section.

When standard manufactured items are specified such as fence, wire, plates, rolled shapes, pipe conduit, etc., and these items are identified by gage, unit weight, section dimensions, etc., such identification will be considered to be nominal weights or dimensions. Unless more stringently controlled by tolerances in cited specifications, manufacturing tolerances established by the industries involved will be accepted.

Scales for weighing materials which are required to be proportioned or measured and paid

for by weight shall be furnished, erected, and maintained by the Contractor, or be certified permanently installed commercial scales.

Scales shall be accurate within one-half percent of the correct weight throughout the range of use. The Contractor shall have the scales checked under the observation of the RPR before beginning work and at such other times as requested. The intervals shall be uniform in spacing throughout the graduated or marked length of the beam or dial and shall not exceed one-tenth of 1 percent of the nominal rated capacity of the scale, but not less than 1 pound (454 grams). The use of spring balances will not be permitted.

Beams, dials, platforms, and other scale equipment shall be so arranged that the operator and the RPR can safely and conveniently view them.

Scale installations shall have available ten standard 50-pound (2.3-kilogram) weights for testing the weighing equipment or suitable weights and devices for other approved equipment.

Scales must be tested for accuracy and serviced before use at a new site. Platform scales shall be installed and maintained with the platform level and rigid bulkheads at each end.

Scales ``overweighing" (indicating more than correct weight) will not be permitted to operate, and all materials received subsequent to the last previous correct weighting-accuracy test will be reduced by the percentage of error in excess of one-half of 1 percent.

In the event inspection reveals the scales have been “under-weighing” (indicating less than correct weight), they shall be adjusted, and no additional payment to the Contractor will be allowed for materials previously weighed and recorded.

All costs in connection with furnishing, installing, certifying, testing, and maintaining scales; for furnishing check weights and scale house; and for all other items specified in this subsection, for the weighing of materials for proportioning or payment, shall be included in the unit contract prices for the various items of the project.

When the estimated quantities for a specific portion of the work are designated as the pay quantities in the contract, they shall be the final quantities for which payment for such specific portion of the work will be made, unless the dimensions of said portions of the work shown on the plans are revised by the Engineer. If revised dimensions result in an increase or decrease in the quantities of such work, the final quantities for payment will be revised in the amount represented by the authorized changes in the dimensions.

90-02 SCOPE OF PAYMENT. The Contractor shall receive and accept compensation provided for in the contract as full payment for furnishing all materials, for performing all work under the contract in a complete and acceptable manner, and for all risk, loss, damage, or expense of whatever character arising out of the nature of the work or the prosecution thereof, subject to the provisions of the subsection titled NO WAIVER OF LEGAL RIGHTS of Section 70.

When the ``basis of payment'' subsection of a technical specification requires that the contract price (price bid) include compensation for certain work or material essential to the item, this same work or material will not also be measured for payment under any other contract item which may appear elsewhere in the contract, plans, or specifications.

90-03 COMPENSATION FOR ALTERED QUANTITIES. When the accepted quantities of work vary from the quantities in the bid, the Contractor shall accept as payment in full, so far as contract items are concerned, payment at the original contract price for the accepted quantities of work actually completed and accepted. No allowance, except as provided for in the subsection titled ALTERATION OF WORK AND QUANTITIES of Section 40 will be made for any increased expense, loss of expected reimbursement, or loss of anticipated profits suffered or claimed by the Contractor which results directly from such alterations or indirectly from his unbalanced allocation of overhead and profit among the contract items, or from any other cause.

90-04 PAYMENT FOR OMITTED ITEMS. As specified in the subsection titled OMITTED ITEMS of Section 40, the Engineer shall have the right to omit from the work (order nonperformance) any contract item, except major contract items, in the best interest of TxDOT.

Should the Engineer omit or order nonperformance of a contract item or portion of such item from the work, the Contractor shall accept payment in full at the contract prices for any work actually completed and acceptable prior to the Engineer's order to omit or non-perform such contract item.

Acceptable materials ordered by the Contractor or delivered on the work prior to the date of the Engineer's order will be paid for at the actual cost to the Contractor and shall become the property of TxDOT.

In addition to the reimbursement as stated before, the Contractor shall be reimbursed for all actual costs incurred for the purpose of performing the omitted contract item prior to the date of the Engineer's order. Such additional costs incurred by the Contractor must be directly related to the deleted contract item and shall be supported by certified statements by the Contractor as to the nature the amount of such costs.

90-05 PAYMENT FOR EXTRA AND FORCE ACCOUNT WORK. Extra work, performed in accordance with the subsection titled EXTRA WORK of Section 40, will be paid for at the contract prices or agreed prices specified in the change order or supplemental agreement authorizing the extra work. When the change order or supplemental agreement authorizing the extra work requires that it be done by force account, such force account shall be measured and paid for based on expended labor, equipment, and materials plus a negotiated and agreed upon allowance for overhead and profit.

a. Miscellaneous. No additional allowance will be made for general superintendence, the use of small tools, or other costs for which no specific allowance is provided.

b. **Comparison of Record.** The Contractor and the Engineer shall compare records of the cost of force account work at the end of each day. Agreement shall be indicated by signature of the Contractor and the Engineer or their duly authorized representatives.

c. **Statement.** No payment will be made for work performed on a force account basis until the Contractor has furnished the Engineer with duplicate itemized statements of the cost of such force account work detailed as follows:

(1) Name, classification, date, daily hours, total hours, rate and extension for each laborer and foreman.

(2) Designation, dates, daily hours, total hours, rental rate, and extension for each unit of machinery and equipment.

(3) Quantities of materials, prices, and extensions.

(4) Transportation of materials.

(5) Cost of property damage, liability and workman's compensation insurance premiums, unemployment insurance contributions, and social security tax.

Statements shall be accompanied and supported by a receipted invoice for all materials used and transportation charges. However, if materials used on the force account work are not specifically purchased for such work but are taken from the Contractor's stock, then in lieu of the invoices the Contractor shall furnish an affidavit certifying that such materials were taken from his stock, that the quantity claimed was actually used, and that the price and transportation claimed represent the actual cost to the Contractor.

90-06 **PARTIAL PAYMENTS.** Partial payments will be made each month as t he work progresses. Said payments will be based upon estimates verified by the Engineer or RPR as to the value of the work performed and materials complete in place in accordance with the contract, plans, and specifications. Such partial payments may also include the delivered actual cost of those materials stockpiled and stored in accordance with the subsection titled PAYMENT FOR MATERIALS ON HAND of this section.

No partial payment will be made when the amount due the Contractor since the last estimate amounts to less than five hundred dollars.

From the total of the amount determined to be payable on a partial payment, 5 percent of such total amount will be deducted and retained by TxDOT until the final payment is made, except as may be provided (at the Contractor's option) in the subsection titled PAYMENT OF WITHHELD FUNDS of this section. The balance (95 percent) of the amount payable, less all previous payments, shall be certified for payment. Should the Contractor exercise his option, as provided in the subsection titled PAYMENT OF WITHHELD FUNDS of this section, no such retainage shall be deducted.

When not less than 95 percent of the work has been completed the Engineer may, at his discretion and with the consent of the surety, prepare an estimate from which will be retained an amount not less than twice the contract value or estimated cost, whichever is greater, of the work remaining to be done. The remainder, less all previous payments and deductions, will then be certified for payment to the Contractor.

It is understood and agreed that the Contractor shall not be entitled to demand or receive partial payment based on quantities of work in excess of those provided in the bid or covered by approved change orders or supplemental agreements, except when such excess quantities have been determined by the Engineer to be a part of the final quantity for the item of work in question.

No partial payment shall bind TxDOT to the acceptance of any materials or work in place as to quality or quantity. All partial payments are subject to correction at the time of final payment as provided in the subsection titled ACCEPTANCE AND FINAL PAYMENT of this section.

The Contractor shall pay the subcontractor for work performed within 10 business or calendar days after the Contractor receives payment for the work performed by the subcontractor. Also, any retained monies on a subcontractor's work shall be paid to the subcontractor within 10 business or calendar days after satisfactory completion of all the subcontractor's work. Completion of the subcontractor's work shall include testing, maintenance, and other similar periods that are the responsibility of the subcontractor.

For purposes of this Section, satisfactory completion shall have been accomplished when:

a. The subcontractor has fulfilled the contract requirements of both TxDOT and the subcontract for the subcontracted work, including the submission of all submittals required by the specifications and TxDOT, and

b. The work done by the subcontract has been inspected and approved by the Engineer and the final quantities of the subcontractor's work have been validated.

The above requirements are also applicable to all sub-tier subcontractors and the above provisions shall be made a part of all subcontract agreements.

Failure to comply with any of the above requirements may result in postponement of contractor payments and/or suspension of work until the deficiencies are remedied.

90-07 PAYMENT FOR MATERIALS ON HAND. Partial payments may be made to the extent of the delivered cost of materials to be incorporated in the work, provided that such materials meet the requirements of the contract, plans, and specifications and are delivered to acceptable sites on the airport property or at other sites in the vicinity that are acceptable to TxDOT. Such delivered costs of stored or stockpiled materials may be included in the next partial payment after the following conditions are met:

a. The material has been stored or stockpiled in a manner acceptable to the Engineer at or on an approved site.

b. The Contractor has furnished the Engineer with acceptable evidence of the quantity and quality of such stored or stockpiled materials.

c. The Contractor has furnished the Engineer with satisfactory evidence that the material costs have been paid.

d. The Contractor has furnished TxDOT legal title (free of liens or encumbrances of any kind) to the material so stored or stockpiled.

e. The Contractor has furnished TxDOT evidence that the material so stored or stockpiled is insured against loss by damage to or disappearance of such materials at anytime prior to use in the work.

It is understood and agreed that the transfer of title and TxDOT's payment for such stored or stockpiled materials shall in no way relieve the Contractor of his responsibility for furnishing and placing such materials in accordance with the requirements of the contract, plans, and specifications.

In no case will the amount of partial payments for materials on hand exceed the contract price for such materials or the contract price for the contract item in which the material is intended to be used.

No partial payment will be made for stored or stockpiled living or perishable plant materials.

The Contractor shall bear all costs associated with the partial payment of stored or stockpiled materials in accordance with the provisions of this subsection.

90-08 PAYMENT OF WITHHELD FUNDS. At the Contractor's option, he may request that TxDOT accept (in lieu of the 5 percent retainage on partial payments described in the subsection titled PARTIAL PAYMENTS of this section) the Contractor's deposits in escrow under the following conditions.

a. The Contractor shall bear all expenses of establishing and maintaining an escrow account and escrow agreement acceptable to TxDOT.

b. The Contractor shall deposit to and maintain in escrow only those securities or bank certificates of deposit as are acceptable to TxDOT and having a value not less than the 10 percent retainage that would otherwise be withheld from partial payment. The Contractor shall maintain deposits in escrow until the Agent authorizes in writing the release of funds.

c. The Contractor shall enter into an escrow agreement satisfactory to TxDOT.

d. The Contractor shall obtain the written consent of the surety to the escrow agreement.

90-09 ACCEPTANCE AND FINAL PAYMENT. When the contract work has been accepted in accordance with the requirements of the subsection titled FINAL ACCEPTANCE of Section 50, the Engineer will prepare the final estimate of the items of work actually performed. The Contractor shall approve the Engineer's final estimate or advise the Engineer of his objections to the final estimate which are based on disputes in measurements or computations of the final quantities to be paid under the contract as amended by change order or supplemental agreement. The Contractor and the Engineer shall resolve all disputes (if any) in the measurement and computation of final quantities to be paid within 30 calendar days of the Contractor's receipt of the Engineer's final estimate. If, after such 30-day period, a dispute still exists, the Contractor may approve the Engineer's estimate under protest of the quantities in dispute, and such disputed quantities shall be considered by TxDOT as a claim in accordance with the subsection titled CLAIMS FOR ADJUSTMENT AND DISPUTES of Section 50.

After the Contractor has approved, or approved under protest, the Engineer's final estimate, final payment will be processed based on the entire sum, or the undisputed sum in case of approval under protest, determined to be due the Contractor less all previous payments and all amounts to be deducted under the provisions of the contract. All prior partial estimates and payments shall be subject to correction in the final estimate and payment.

If the Contractor has filed a claim for additional compensation under the provisions of the subsection titled CLAIMS FOR ADJUSTMENTS AND DISPUTES of Section 50 or under the provisions of this subsection, such claims will be considered by TxDOT in accordance with federal, state and local laws or ordinances. Upon final adjudication of such claims, any additional payment determined to be due the Contractor will be paid according to a supplemental final estimate.

90-10 AFFIDAVIT OF ALL BILLS PAID. Prior to final acceptance of this project by TxDOT, the Contractor shall execute an affidavit that all bills for labor, materials and incidental incurred in the construction of these improvements, have been paid in full, including any retainage, and that there are no claims pending.

END OF SECTION 90

SECTION 100

CONTRACTOR QUALITY CONTROL PROGRAM

100-01 GENERAL. When the specifications require a Contractor's Quality Control Program, the Contractor shall establish, provide, and maintain an effective Quality Control Program that details the methods and procedures that will be taken to assure that all materials and completed construction required by this contract conform to contract plans, technical specifications and other requirements, whether manufactured by the Contractor, or procured from subcontractors or vendors. A lthough guidelines are established and certain minimum requirements are specified herein and elsewhere in the contract technical specifications, the Contractor shall assume full responsibility for accomplishing the stated purpose.

The intent of this section is to enable the Contractor to establish a necessary level of control that will:

a. Adequately provide for the production of acceptable quality materials.

b. Provide sufficient information to assure both the Contractor and the Engineer that the specification requirements can be met.

c. Allow the Contractor as much latitude as possible to develop his or her own standard of control.

At the pre-construction conference, the Contractor shall be prepared to discuss his understanding of the quality control requirements. The Contractor shall not begin any construction or production of materials to be incorporated into the quality-controlled work until the Quality Control Program has been reviewed by the Engineer. No partial payment will be made for materials subject to specific quality control requirements until the Quality Control Program has been reviewed.

The quality control requirements contained in this section and elsewhere in the contract technical specifications are in addition to and separate from the acceptance testing requirements. Acceptance testing requirements are the responsibility of the Engineer.

100-02 DESCRIPTION OF PROGRAM.

a. General Description. The Contractor shall establish a Quality Control Program to perform inspection and testing of all items of work required by the technical specifications, including those performed by subcontractors. T his Quality Control Program shall ensure conformance to applicable specifications and plans with respect to materials, workmanship, construction, finish, and functional performance. The Quality Control Program shall be effective for control of all construction work performed under this Contract and shall specifically include

surveillance and tests required by the technical specifications, in addition to other requirements of this section and any other activities deemed necessary by the Contractor to establish an effective level of quality control.

b. Quality Control Program. The Contractor shall describe the Quality Control Program in a written document that shall be reviewed by the Engineer prior to the start of any production, construction, or off-site fabrication of quality controlled work. The written Quality Control Program shall be submitted to the Engineer for review at least five (5) days before the pre-pave meeting.

The Quality Control Program shall be organized to address, as a minimum, the following items:

1. Quality control organization;
2. Project progress schedule;
3. Submittals schedule;
4. Inspection requirements;
5. Quality control testing plan;
6. Documentation of quality control activities; and
7. Requirements for corrective action when quality control and/or acceptance criteria are not met.

The Contractor is encouraged to add any additional elements to the Quality Control Program that he deems necessary to adequately control all production and/or construction processes required by this contract.

100-03 QUALITY CONTROL ORGANIZATION. The Contractor's Quality Control Program shall be implemented by the establishment of a separate quality control organization. An organizational chart shall be developed to show all quality control personnel and how these personnel integrate with other management/production and construction functions and personnel.

The organizational chart shall identify all quality control staff by name and function, and shall indicate the total staff required to implement all elements of the Quality Control Program, including inspection and testing for each item of work. If necessary, different technicians can be utilized for specific inspection and testing functions for different items of work. If an outside organization or independent testing laboratory is used for implementation of all or part of the Quality Control Program, the personnel assigned shall be subject to the qualification requirements of paragraph 100-03a and 100-03b. The organizational chart shall indicate which personnel are Contractor employees and which are provided by an outside organization.

The quality control organization shall consist of the following minimum personnel:

a. Program Administrator. The Program Administrator shall be a full-time employee of the Contractor, or a consultant engaged by the Contractor. The Program Administrator shall have a minimum of 5 years of experience in airport

and/or highway construction and shall have had prior quality control experience on a project of comparable size and scope as the contract.

Additional qualifications for the Program Administrator shall include at least 1 of the following requirements:

1. Professional engineer with 1 year of airport paving experience acceptable to the Engineer.

2. Engineer-in-training with 2 years of airport paving experience acceptable to the Engineer.

3. An individual with 3 years of highway and/or airport paving experience acceptable to the Engineer, with a B achelor of Science Degree in Civil Engineering, Civil Engineering Technology or Construction.

4. Construction materials technician certified at Level III by the National Institute for Certification in Engineering Technologies (NICET).

5. Highway materials technician certified at Level III by NICET.

6. Highway construction technician certified at Level III by NICET.

7. A NICET certified engineering technician in Civil Engineering Technology with 5 years of highway and/or airport paving experience acceptable to the Engineer.

The Program Administrator shall have full authority to institute any and all actions necessary for the successful implementation of the Quality Control Program to ensure compliance with the contract plans and technical specifications. The Program Administrator shall report directly to a responsible officer of the construction joint venture, LLP,. The Program Administrator may supervise the Quality Control Program on more than one project provided that person can be at the job site within 2 hours after being notified of a problem.

b. Quality Control Technicians. A sufficient number of quality control technicians necessary to adequately implement the Quality Control Program shall be provided. These personnel shall be either engineers, engineering technicians, or experienced craftsman with qualifications in the appropriate field equivalent to NICET Level II or higher construction materials technician or highway construction technician and shall have a minimum of 2 years of experience in their area of expertise.

The quality control technicians shall report directly to the Program Administrator and shall perform the following functions:

1. Inspection of all materials, construction, plant, and equipment for conformance to the technical specifications and as required by Section 100-06.

2. Performance of all quality control tests as required by the technical specifications and Section 100-07.

Certification at an equivalent level, by a state or nationally recognized organization will be acceptable in lieu of NICET certification.

c. Staffing Levels. The Contractor shall provide sufficient qualified quality control personnel to monitor each work activity at all times. Where material is being produced in a plant for incorporation into the work, separate plant and field technicians shall be provided at each plant and field placement location. The scheduling and coordinating of all inspection and testing must match the type and pace of work activity. The Quality Control Program shall state where different technicians will be required for different work elements.

100-04 PROJECT PROGRESS SCHEDULE. The Contractor shall submit a coordinated construction schedule for all work activities. The schedule shall be prepared as a network diagram in Critical Path Method (CPM), PERT, or other format, or as otherwise specified in the contract. As a minimum, it shall provide information on the sequence of work activities, milestone dates, and activity duration.

The Contractor shall maintain the work schedule and provide an update and analysis of the progress schedule on a twice-monthly basis, or as otherwise specified in the contract. Submission of the work schedule shall not relieve the Contractor of overall responsibility for scheduling, sequencing, and coordinating all work to comply with the requirements of the contract.

100-05 SUBMITTALS SCHEDULE. The Contractor shall submit a detailed listing of all submittals (e.g., mix designs, material certifications) and shop drawings required by the technical specifications. The listing can be developed in a spreadsheet format and shall include:

a. Specification item number;
b. Item description;
c. Description of submittal;
d. Specification paragraph requiring submittal; and
e. Scheduled date of submittal.

100-06 INSPECTION REQUIREMENTS. Quality control inspection functions shall be organized to provide inspections for all definable features of work, as detailed below. The Contractor as specified by Section 100-07 shall document all inspections.

Inspections shall be performed daily to ensure continuing compliance with contract requirements until completion of the particular feature of work. These shall include the following minimum requirements:

a. During plant operation for material production, quality control test results and periodic inspections shall be utilized to ensure the quality of aggregates and other mix components, and to adjust and control mix proportioning to meet the approved

mix design and other requirements of the technical specifications. All equipment utilized in proportioning and mixing shall be inspected to ensure its proper operating condition. The Quality Control Program shall detail how these and other quality control functions will be accomplished and utilized.

b. During field operations, quality control test results and periodic inspections shall be utilized to ensure the quality of all materials and workmanship. All equipment utilized in placing, finishing, and compacting shall be inspected to ensure its proper operating condition and to ensure that all such operations are in conformance to the technical specifications and are within the plan dimensions, lines, grades, and tolerances specified. The Program shall document how these and other quality control functions will be accomplished and utilized.

100-07 QUALITY CONTROL TESTING PLAN. As a part of the overall Quality Control Program, the Contractor shall implement a quality control testing plan, as required by the technical specifications. The testing plan shall include the minimum tests and test frequencies required by each technical specification Item, as well as any additional quality control tests that the Contractor deems necessary to adequately control production and/or construction processes.

The testing plan can be developed in a spreadsheet fashion and shall, as a minimum, include the following:

a. Specification item number (e.g., P-401);
b. Item description (e.g., Plant Mix Bituminous Pavements);
c. Test type (e.g., gradation, grade, asphalt content);
d. Test standard (e.g., ASTM or AASHTO test number, as applicable);
e. Test frequency (e.g., as required by technical specifications or minimum frequency when requirements are not stated);
f. Responsibility (e.g., plant technician); and
g. Control requirements (e.g., target, permissible deviations).

The testing plan shall contain a statistically based procedure of random sampling for acquiring test samples in accordance with ASTM D 3665. The Engineer shall be provided the opportunity to witness quality control sampling and testing.

The Contractor as required by Section 100-08 shall document all quality control test results.

100-08 DOCUMENTATION OF QUALITY CONTROL ACTIVITIES. The Contractor shall maintain current quality control records of all inspections and tests performed. These records shall include factual evidence that the required inspections or tests have been performed, including type and number of inspections or tests involved; results of inspections or tests; nature of defects, deviations, causes for rejection, etc.; proposed remedial action; and corrective actions taken.

These records must cover both conforming and defective or deficient features, and must include a statement that all supplies and materials incorporated in the work are in full

compliance with the terms of the contract. Legible copies of these records shall be furnished to the Engineer daily. The records shall cover all work placed subsequent to the previously furnished records and shall be verified and signed by the Contractor's Program Administrator.

Specific Contractor quality control records required for the contract shall include, but are not necessarily limited to, the following records:

a. **Daily Inspection Reports**. Each Contractor quality control technician shall maintain a daily log of all inspections performed for both Contractor and subcontractor operations on a form acceptable to the Engineer. These technician's daily reports shall provide factual evidence that continuous quality control inspections have been performed and shall, as a minimum, include the following:

1. Technical specification item number and description;
2. Compliance with approved submittals;
3. Proper storage of materials and equipment;
4. Proper operation of all equipment;
5. Adherence to plans and technical specifications;
6. Review of quality control tests; and
7. Safety inspection.

The daily inspection reports shall identify inspections conducted, results of inspections, location and nature of defects found, causes for rejection, and remedial or corrective actions taken or proposed.

The daily inspection reports shall be signed by the responsible quality control technician and the Program Administrator. The Engineer or RPR shall be provided at least one copy of each daily inspection report on the work day following the day of record.

b. Daily Test Reports. The Contractor shall be responsible for establishing a system that will record all quality control test results. Daily test reports shall document the following information:

1. Technical specification item number and description;
2. Test designation;
3. Location;
4. Date of test;
5. Control requirements;
6. Test results;
7. Causes for rejection;
8. Recommended remedial actions; and
9. Retests.

Test results from each day's work period shall be submitted to the Engineer or RPR prior to the start of the next day's work period. When required by the technical specifications, the Contractor shall maintain statistical quality control charts. The daily

test reports shall be signed by the responsible quality control technician and the Program Administrator.

100-09 CORRECTIVE ACTION REQUIREMENTS. The Quality Control Program shall indicate the appropriate action to be taken when a process is deemed, or believed, to be out of control (out of tolerance) and detail what action will be taken to bring the process into control. The requirements for corrective action shall include both general requirements for operation of the Quality Control Program as a whole, and for individual items of work contained in the technical specifications.

The Quality Control Program shall detail how the results of quality control inspections and tests will be used for determining the need for corrective action and shall contain clear sets of rules to gauge when a process is out of control and the type of correction to be taken to regain process control.

When applicable or required by the technical specifications, the Contractor shall establish and utilize statistical quality control charts for individual quality control tests. The requirements for corrective action shall be linked to the control charts.

100-10 SURVEILLANCE BY THE ENGINEER. All items of material and equipment shall be subject to surveillance by the Engineer or RPR at the point of production, manufacture or shipment to determine if the Contractor, producer, manufacturer or shipper maintains an adequate quality control system in conformance with the requirements detailed herein and the applicable technical specifications and plans. In addition, all items of materials, equipment and work in place shall be subject to surveillance by the Engineer or RPR at the site for the same purpose.

Surveillance by the Engineer or RPR does not relieve the Contractor of performing quality control inspections of either on-site or off-site Contractor or subcontractor's work.

100-11 NONCOMPLIANCE. The Engineer will notify the Contractor of any noncompliance with any of the foregoing requirements. The Contractor shall, after receipt of such notice, immediately take corrective action. Any notice, when delivered by the Engineer or his authorized representative to the Contractor or his authorized representative at the site of the work, shall be considered sufficient notice.

In cases where quality control activities do not comply with either the Contractor's Quality Control Program or the contract provisions, or where the Contractor fails to properly operate and maintain an effective Quality Control Program, as determined by the Engineer, the Engineer may:

a. Order the Contractor to replace ineffective or unqualified quality control personnel or subcontractors.
b. Order the Contractor to stop operations until appropriate corrective actions are taken.

END of SECTION 100

SECTION 110

METHODS OF ESTIMATING PERCENTAGE OF MATERIAL WITHIN SPECIFICATIONS LIMITS (PWL)

110-01 GENERAL. When the specifications provide for acceptance of material based on the method of estimating percentage of material within specification limits (PWL), the PWL will be determined in accordance with this section. All test results for a lot will be analyzed statistically to determine the total estimated percent of the lot that is within specification limits. The PWL is computed using the sample average (X) and sample standard deviation (Sn) of the specified number (n) of sublots for the lot and the specification tolerance limits, L for lower and U for upper, for the particular acceptance parameter. F rom these values, the respective Quality index(s), Q_L for Lower Quality Index and/or Q_U for Upper Quality Index, is computed and the PWL for the lot for the specified n is determined from Table 1.

There is some degree of uncertainty (risk) in the measurement for acceptance because only a fraction of production material (the population) is sampled and tested. This uncertainty exists because all portions of the production material have the same probability to be randomly sampled. The Contractor's risk is the probability that material produced at the acceptable quality level is rejected or subjected to a pay adjustment. TxDOT's risk is the probability that material produced at the rejectable quality level is accepted.

IT IS THE INTENT OF THIS SECTION TO INFORM THE CONTRACTOR THAT, IN ORDER TO CONSISTENTLY OFFSET THE CONTRACTOR'S RISK FOR MATERIAL EVALUATED, PRODUCTION QUALITY (USING POPULATION AVERAGE AND POPULATION STANDARD DEVIATION) MUST BE MAINTAINED AT THE ACCEPTABLE QUALITY SPECIFIED OR HIGHER. IN ALL CASES, IT IS THE RESPONSIBILITY OF THE CONTRACTOR TO PRODUCE AT QUALITY LEVELS THAT WILL MEET THE SPECIFIED ACCEPTANCE CRITERIA WHEN SAMPLED AND TESTED AT THE FREQUENCIES SPECIFIED.

110-02 METHOD FOR COMPUTING PWL. The computational sequence for computing PWL is as follows:

a. Divide the lot into n sublots in accordance with the acceptance requirements of the specification.
b. Locate the random sampling position within the sublot in accordance with the requirements of the specification.
c. Make a m easurement at each location, or take a t est portion and make the measurement on the test portion in accordance with the testing requirements of the specification.
d. Find the sample average (X) for all sublot values within the lot by using the following formula:

$$X = (x1 + x2 + x3 + \ldots xn) / n$$

Where:

X = Sample average of all sublot values within a lot
x1, x2 = Individual sublot values
n = Number of sublots

e. Find the sample standard deviation (Sn) by use of the following formula:

$$Sn = [(d1^2 + d2^2 + d3^2 + \ldots dn^2) / (n-1)]^{1/2}$$

Where:

Sn = Sample standard deviation of the number of sublot values in the set

d1, d2 = Deviations of the individual sublot values X1, X2 . . from the average value X
that is: d1 = (x1 - X), d2 = (x2 - X) . . dn = (xn X)
n = Number of sublots

f. For single sided specification limits (i.e., L only), compute the Lower Quality Index Q_L by use of the following formula:

$$Q_L = (X - L) / Sn$$

Where:
L = specification lower tolerance limit

Estimate the percentage of material within limits (PWL) by entering Table 1 with Q_L, using the column appropriate to the total number (n) of measurements. If the value of Q_L falls between values shown on the table, use the next higher value of PWL.

g. For double sided specification limits (i.e. L and U), compute the Quality Indexes Q_L and Q_U by use of the following formulas:

$$Q_L = (X - L) / Sn \quad \text{and} \quad Q_U = (U - X) / Sn$$

Where:
L and U = specification lower and upper tolerance limits

Estimate the percentage of material between the lower (L) and upper (U) tolerance limits (PWL) by entering Table 1 separately with Q_L and Q_U, using the column appropriate to the total number (n) of measurements, and determining the percent of material above P_L and percent of material below P_U for each tolerance limit. If the values of Q_L fall between values shown on the table, use the next higher value of P_L or P_U. Determine the PWL by use of the following formula:

$$PWL = (P_U + P_L) - 100$$

Where:
P_L = percent within lower specification limit

P_U = percent within upper specification limit

EXAMPLE OF PWL CALCULATION

Project: Example Project
Test Item: Item P-401, Lot A.

A. PWL Determination for Mat Density.

1. Density of four random cores taken from Lot A.

A-1	96.60
A-2	97.55
A-3	99.30
A-4	98.35

n = 4

2. Calculate average density for the lot.

X= (x1 + x2 + x3 + . . xn) / n
X = (96.60 + 97.55 + 99.30 + 98.35) / 4
X= 97.95 percent density

3. Calculate the standard deviation for the lot.

$Sn = [((96.60 - 97.95)^2 + (97.55 - 97.95)^2 + (99.30 - 97.95)^2 + (98.35 - 97.95)^2)) / (4 - 1)]^{1/2}$
$Sn = [(1.82 + 0.16 + 1.82 + 0.16) / 3]^{1/2}$
$Sn = 1.15$

4. Calculate the Lower Quality Index Q_L for the lot. (L=96.3)

$Q_L = (X - L) / Sn$
$Q_L = (97.95 - 96.30) / 1.15$
$Q_L = 1.4384$

5. Determine PWL by entering Table 1 with Q_L= 1.44 and n= 4.

PWL = 98

B. PWL Determination for Air Voids.

1. Air Voids of four random samples taken from Lot A.

A-1	5.00
A-2	3.74

A-3	2.30
A-4	3.25

2. Calculate the average air voids for the lot.

$X = (x1 + x + x3 \ldots n) / n$
$X = (5.00 + 3.74 + 2.30 + 3.25) / 4$
$X = 3.57$ percent

3. Calculate the standard deviation Sn for the lot.

$Sn = [((3.57 - 5.00)^2 + (3.57 - 3.74)^2 + (3.57 - 2.30)^2 + (3.57 - 3.25)^2) / (4 - 1)]^{1/2}$
$Sn = [(2.04 + 0.03 + 1.62 + 0.10) / 3]^{1/2}$
$Sn = 1.12$

4. Calculate the Lower Quality Index Q_L for the lot. (L= 2.0)

$Q_L = (X - L) Sn$
$Q_L = (3.57 - 2.00) / 1.12$
$Q_L = 1.3992$

5. Determine P_L by entering Table 1 with $Q_L = 1.40$ and n = 4.

$P_L = 97$

6. Calculate the Upper Quality Index Q_U for the lot. (U= 5.0)

$Q_U = (U - X) / Sn$
$Q_U = (5.00 - 3.57) / 1.12$
$Q_U = 1.2702$

7. Determine P_U by entering Table 1 with $Q_U = 1.27$ and n = 4.

$P_U = 93$

8. Calculate Air Voids PWL

$PWL = (P_L + P_U) - 100$
$PWL = (97 + 93) - 100 = 90$

TABLE 1. TABLE FOR ESTIMATING PERCENT OF LOT WITHIN LIMITS (PWL)

Percent Within Limits	Positive Values of Q (Q_L and Q_U) Limits					
(P_L and P_U)	n=3	n=4	n=5	n=6	n=7	n=8
99	1.1541	1.4700	1.6714	1.8008	1.8888	1.9520
98	1.1524	1.4400	1.6016	1.6982	1.7612	1.8053
97	1.1496	1.4100	1.5427	1.6181	1.6661	1.6993
96	1.1456	1.3800	1.4897	1.5497	1.5871	1.6127
95	1.1405	1.3500	1.4407	1.4887	1.5181	1.5381
94	1.1342	1.3200	1.3946	1.4329	1.4561	1.4716
93	1.1269	1.2900	1.3508	1.3810	1.3991	1.4112
92	1.1184	1.2600	1.3088	1.3323	1.3461	1.3554
91	1.1089	1.2300	1.2683	1.2860	1.2964	1.3032
90	1.0982	1.2000	1.2290	1.2419	1.2492	1.2541
89	1.0864	1.1700	1.1909	1.1995	1.2043	1.2075
88	1.0736	1.1400	1.1537	1.1587	1.1613	1.1630
87	1.0597	1.1100	1.1173	1.1191	1.1199	1.1204
86	1.0448	1.0800	1.0817	1.0808	1.0800	1.0794
85	1.0288	1.0500	1.0467	1.0435	1.0413	1.0399
84	1.0119	1.0200	1.0124	1.0071	1.0037	1.0015
83	0.9939	0.9900	0.9785	0.9715	0.9672	0.9643
82	0.9749	0.9600	0.9452	0.9367	0.9325	0.9281
81	0.9550	0.9300	0.9123	0.9025	0.8966	0.8928
80	0.9342	0.9000	0.8799	0.8690	0.8625	0.8583
79	0.9124	0.8700	0.8478	0.8360	0.8291	0.8245
78	0.8897	0.8400	0.8160	0.8036	0.7962	0.7915
77	0.8662	0.8100	0.7846	0.7716	0.7640	0.7590
76	0.8417	0.7800	0.7535	0.7401	0.7322	0.7271
75	0.8165	0.7500	0.7226	0.7089	0.7009	0.6958
74	0.7904	0.7200	0.6921	0.6781	0.6701	0.6649
73	0.7636	0.6900	0.6617	0.6477	0.6396	0.6344
72	0.7360	0.6600	0.6316	0.6176	0.6095	0.6044
71	0.7077	0.6300	0.6016	0.5878	0.5798	0.5747
70	0.6787	0.6000	0.5719	0.5583	0.5504	0.5454
69	0.6490	0.5700	0.5423	0.5290	0.5213	0.5164
68	0.6187	0.5400	0.5129	0.4999	0.4924	0.4877
67	0.5878	0.5100	0.4836	0.4710	0.4638	0.4592
66	0.5563	0.4800	0.4545	0.4424	0.4354	0.4310
65	0.5242	0.4500	0.4255	0.4139	0.4073	0.4031
64	0.4916	0.4200	0.3967	0.3856	0.3793	0.3753
63	0.4586	0.3900	0.3679	0.3575	0.3515	0.3477
62	0.4251	0.3600	0.3392	0.3295	0.3239	0.3203
61	0.3911	0.3300	0.3107	0.3016	0.2964	0.2931
60	0.3568	0.3000	0.2822	0.2738	0.2691	0.2660
59	0.3222	0.2700	0.2537	0.2461	0.2418	0.2391
58	0.2872	0.2400	0.2254	0.2186	0.2147	0.2122
57	0.2519	0.2100	0.1971	0.1911	0.1877	0.1855
56	0.2164	0.1800	0.1688	0.1636	0.1607	0.1592
55	0.1806	0.1500	0.1408	0.1363	0.1338	0.1322
54	0.1447	0.1200	0.1125	0.1090	0.1070	0.1057
53	0.1087	0.0900	0.0843	0.0817	0.0802	0.0792
52	0.0725	0.0600	0.0562	0.0544	0.0534	0.0528
51	0.0363	0.0300	0.0281	0.0272	0.0267	0.0264
50	0.0	0.0	0.0	0.0	0.0	0.0

TABLE 1. TABLE FOR ESTIMATING PERCENT OF LOT WITHIN LIMITS (PWL)

Percent Within Limits			Negative Values of Q (Q_L and Q_U) Limits			
(P_L and P_U)	n=3	n=4	n=5	n=6	n=7	n=8
49	_0.0363	_0.0300	_0.0281	_0.0272	_0.0267	_0.0264
48	_0.0725	_0.0600	_0.0562	_0.0544	_0.0534	_0.0528
47	_0.1087	_0.0900	_0.0843	_0.0817	_0.0802	_0.0792
46	_0.1447	_0.1200	_0.1125	_0.1090	_0.1070	_0.1057
45	_0.1806	_0.1500	_0.1408	_0.1363	_0.1338	_0.1322
44	_0.2164	_0.1800	_0.1688	_0.1636	_0.1607	_0.1592
43	_0.2519	_0.2100	_0.1971	_0.1911	_0.1877	_0.1855
42	_0.2872	_0.2400	_0.2254	_0.2186	_0.2147	_0.2122
41	_0.3222	_0.2700	_0.2537	_0.2461	_0.2418	_0.2391
40	_0.3568	_0.3000	_0.2822	_0.2738	_0.2691	_0.2660
39	_0.3911	_0.3300	_0.3107	_0.3016	_0.2964	_0.2931
38	_0.4251	_0.3600	_0.3392	_0.3295	_0.3239	_0.3203
37	_0.4586	_0.3900	_0.3679	_0.3575	_0.3515	_0.3477
36	_0.4916	_0.4200	_0.3967	_0.3856	_0.3793	_0.3753
35	_0.5242	_0.4500	_0.4255	_0.4139	_0.4073	_0.4031
34	_0.5563	_0.4800	_0.4545	_0.4424	_0.4354	_0.4310
33	_0.5878	_0.5100	_0.4836	_0.4710	_0.4638	_0.4592
32	_0.6187	_0.5400	_0.5129	_0.4999	_0.4924	_0.4877
31	_0.6490	_0.5700	_0.5423	_0.5290	_0.5213	_0.5164
30	_0.6787	_0.6000	_0.5719	_0.5583	_0.5504	_0.5454
29	_0.7077	_0.6300	_0.6016	_0.5878	_0.5798	_0.5747
28	_0.7360	_0.6600	_0.6316	_0.6176	_0.6095	_0.6044
27	_0.7636	_0.6900	_0.6617	_0.6477	_0.6396	_0.6344
26	_0.7904	_0.7200	_0.6921	_0.6781	_0.6701	_0.6649
25	_0.8165	_0.7500	_0.7226	_0.7089	_0.7009	_0.6958
24	_0.8417	_0.7800	_0.7535	_0.7401	_0.7322	_0.7271
23	_0.8662	_0.8100	_0.7846	_0.7716	_0.7640	_0.7590
22	_0.8897	_0.8400	_0.8160	_0.8036	_0.7962	_0.7915
21	_0.9124	_0.8700	_0.8478	_0.8360	_0.8291	_0.8245
20	_0.9342	_0.9000	_0.8799	_0.8690	_0.8625	_0.8583
19	_0.9550	_0.9300	_0.9123	_0.9025	_0.8966	_0.8928
18	_0.9749	_0.9600	_0.9452	_0.9367	_0.9325	_0.9281
17	_0.9939	_0.9900	_0.9785	_0.9715	_0.9672	_0.9643
16	_1.0119	_1.0200	_1.0124	_1.0071	_1.0037	_1.0015
15	_1.0288	_1.0500	_1.0467	_1.0435	_1.0413	_1.0399
14	_1.0448	_1.0800	_1.0817	_1.0808	_1.0800	_1.0794
13	_1.0597	_1.1100	_1.1173	_1.1191	_1.1199	_1.1204
12	_1.0736	_1.1400	_1.1537	_1.1587	_1.1613	_1.1630
11	_1.0864	_1.1700	_1.1909	_1.1995	_1.2043	_1.2075
10	_1.0982	_1.2000	_1.2290	_1.2419	_1.2492	_1.2541
9	_1.1089	_1.2300	-1.2683	_1.2860	_1.2964	_1.3032
8	_1.1184	_1.2600	_1.3088	_1.3323	_1.3461	_1.3554
7	_1.1269	_1.2900	_1.3508	_1.3810	_1.3991	_1.4112
6	_1.1342	_1.3200	_1.3946	_1.4329	_1.4561	_1.4716
5	_1.1405	_1.3500	_1.4407	_1.4887	_1.5181	_1.5381
4	_1.1456	_1.3800	_1.4897	_1.5497	_1.5871	_1.6127
3	_1.1496	_1.4100	_1.5427	_1.6181	_1.6661	_1.6993
2	_1.1524	_1.4400	_1.6016	_1.6982	_1.7612	_1.8053
1	_1.1541	_1.4700	_1.6714	_1.8008	_1.8888	_1.9520

END OF SECTION 110

SECTION 120
NUCLEAR GAGES

120-01 TESTING. When the specifications provide for nuclear gage acceptance testing of material for Item P-152, P-154, P-208, and P-209, the testing shall be performed in accordance with the section. At each sampling location, the field density shall be determined in accordance with ASTM D 2922 using the Direct Transmission Method. T he nuclear gage shall be calibrated in accordance with Annex A1. Calibration and operations of the gage shall be in accordance with the requirements of the manufacturer. The operator of the nuclear gate must show evidence of training and experience in the use of the instrument. The gage shall be standardized daily in accordance with ASTM D 2922, paragraph 8.

Use of ASTM D 2922 results in a wet unit weight, and when using this method, ASTM D 3017 shall be used to determine the moisture content of the material. The moisture gage shall be standardized daily in accordance with ASTM D 3017, paragraph 7.

The material shall be accepted on a lot basis. E ach Lot shall be divided into eight (8) sublots when ASTM D 2922 is used.

When PWL concepts are incorporated, compaction shall continue until a PWL of 90 percent or more is achieved using the lower specification tolerance limits (L) below.

The percentage of material within specification limits (PWL) shall be determined in accordance with the procedures specified in Section 110 of the General Provisions.

The lower specification tolerance limit (L) for density shall be:

Specification Item Number	Specifications Tolerance (L) for Density, (percent of laboratory maximum)	
Item P-152	90.5 for cohesive material,	95.5 for non-cohesive
Item P-154	95.5	
Item P-208	97.0	
Item P-209	97.0	

If the PWL is less than 90 percent, the lot shall be reworked and recompacted by the Contractor at the Contractor's expense. After reworking and recompaction, the lot shall be resampled and retested. Retest results for the lot shall be reevaluated for acceptance. This procedure shall continue until the PWL is 90 percent or greater.

120-02. VERIFICATION TESTING. (For items P-152 and P-154 only.) The Engineer will verify the maximum laboratory density of material placed in the field for each lot. A minimum of one test will be made for each lot of material at the site. The verification process will consist of: (1) compacting the material and determining the dry density and moisture-density in accordance with [ASTM D 698 for aircraft gross weights less than 60,000 pounds] [ASTM D 1557 for aircraft gross weights 60,000 pounds or more], and (2) comparing the result with the laboratory moisture-density curves for the material being placed. This verification process is commonly referred to as a "one-point Proctor". If the material does not conform to the existing moisture-density curves, the Engineer will establish the laboratory maximum density and optimum moisture content for the material in accordance with [ASTM 698 for aircraft gross

weights less than 60,000 pounds] [ASTM D 1557 for aircraft gross weights 60,000 pounds or more].

Additional verification tests will be made, if necessary, to properly classify all materials placed in the lot.

The percent compaction of each sampling location will be determined by dividing the field density of each sublot by the laboratory maximum density for the lot.

End of Section 120

U.S. Department of Transportation

Federal Aviation Administration

Advisory Circular

Subject: Operational Safety on Airports During Construction

Date: 9/29/11

Initiated by: AAS-100

AC No: 150/5370-2F

1. Purpose. This AC sets forth guidelines for operational safety on airports during construction.

2. What this AC Cancels. This AC cancels AC 150/5370-2E, Operational Safety on Airports During Construction, dated January 17, 2003.

3. Whom This AC Affects. This AC assists airport operators in complying with Title 14 Code of Federal Regulations (CFR) Part 139, Certification of Airports (Part 139). For those certificated airports, this AC provides one way, but not the only way, of meeting those requirements. The use of this AC is mandatory for those airport construction projects receiving funds under the Airport Improvement Program (AIP) or the Passenger Facility Charge (PFC) Program. See Grant Assurance No. 34, "Policies, Standards, and Specifications," and PFC Assurance No. 9, "Standard and Specifications." While we do not require non-certificated airports without grant agreements to adhere to these guidelines, we recommend that they do so to help these airports maintain operational safety during construction.

4. Principal Changes.

a. Construction activities are prohibited in safety areas while the associated runway or taxiway is open to aircraft.

b. Guidance is provided in incorporating Safety Risk Management.

c. Recommended checklists are provided for writing Construction Safety and Phasing Plans and for daily inspections.

5. Reading Material Related to this AC. Numerous ACs are referenced in the text of this AC. These references do not include a revision letter, as they are to be read as referring to the latest version. Appendix 1 contains a list of reading material on airport construction, design, and potential safety hazards during construction, as well as instructions for obtaining these documents.

Michael J. O'Donnell
Director of Airport Safety and Standards

Intentionally Left Blank

Table of Contents

Chapter 1.	**Planning an Airfield Construction Project**	**1**
101.	Overview.	1
102.	Plan for Safety.	1
103.	Develop a Construction Safety and Phasing Plan (CSPP).	2
104.	Who Is Responsible for Safety During Construction?	3
Chapter 2.	**Construction Safety and Phasing Plans**	**7**
201.	Overview.	7
202.	Assume Responsibility.	7
203.	Submit the CSPP.	7
204.	Meet CSPP Requirements.	7
205.	Coordination.	11
206.	Phasing.	11
207.	Areas and Operations Affected by Construction Activity.	12
208.	Navigation Aid (NAVAID) Protection.	13
209.	Contractor Access.	13
210.	Wildlife Management.	15
211.	Foreign Object Debris (FOD) Management.	16
212.	Hazardous Materials (HAZMAT) Management.	16
213.	Notification of Construction Activities.	16
214.	Inspection Requirements.	17
215.	Underground Utilities.	17
216.	Penalties.	17
217.	Special Conditions.	17
218.	Runway and Taxiway Visual Aids.	18
219.	Marking and Signs for Access Routes.	24
220.	Hazard Marking, Lighting and Signing.	24
221.	Protection of Runway and Taxiway Safety Areas.	26
222.	Other Limitations on Construction.	28
Chapter 3.	**Guidelines for Writing a CSPP**	**31**
301.	General Requirements.	31
302.	Applicability of Subjects.	31
303.	Graphical Representations.	31
304.	Reference Documents.	31
305.	Restrictions.	31
306.	Coordination.	31
307.	Phasing.	32
308.	Areas and Operations Affected By Construction.	32
309.	Navigation Aid (NAVAID) Protection.	33
310.	Contractor Access.	33
311.	Wildlife Management.	34
312.	Foreign Object Debris (FOD) Management.	34
313.	Hazardous Materials (HAZMAT) Management.	34
314.	Notification of Construction Activities.	35
315.	Inspection Requirements.	35
316.	Underground Utilities.	35
317.	Penalties.	35
318.	Special Conditions.	35
319.	Runway and Taxiway Visual Aids.	35
320.	Marking and Signs for Access Routes.	36
321.	Hazard Marking and Lighting.	36
322.	Protection of Runway and Taxiway Safety Areas.	36
323.	Other Limitations on Construction.	36
Appendix 1.	**Related Reading Material**	**37**

Appendix 2. Definition of Terms 39
Appendix 3. Safety and Phasing Plan Checklist 43
Appendix 4. Construction Project Daily Safety Inspection Checklist 51

List of Tables

Table 3-1 Sample Operations Effects 32

List of Figures

Figure 2-1 Markings for a Temporarily Closed Runway 19
Figure 2-2 Taxiway Closure 20
Figure 2-3 Lighted X in Daytime 22
Figure 2-4 Lighted X at Night 22
Figure 2-5 Interlocking Barricades 25
Figure 2-6 Low Profile Barricades 25

Chapter 1. Planning an Airfield Construction Project

101. Overview. Airports are complex environments, and procedures and conditions associated with construction activities often affect aircraft operations and can jeopardize operational safety. Safety considerations are paramount and may make operational impacts unavoidable. However, careful planning, scheduling, and coordination of construction activities can minimize disruption of normal aircraft operations and avoid situations that compromise the airport's operational safety. The airport operator must understand how construction activities and aircraft operations affect one another to be able to develop an effective plan to complete the project. While the guidance in this AC is primarily used for construction operations, some of the concepts, methods and procedures described may also enhance the day-to-day airport maintenance operations, such as lighting maintenance and snow removal operations.

102. Plan for Safety. Safety, maintaining aircraft operations, and construction costs are all interrelated. Since safety must not be compromised, the airport operator must strike a balance between maintaining aircraft operations and construction costs. This balance will vary widely depending on the operational needs and resources of the airport and will require early coordination with airport users and the FAA. As the project design progresses, the necessary construction locations, activities, and associated costs will be identified. As they are identified, their impact to airport operations must be assessed. Adjustments are made to the proposed construction activities, often by phasing the project, and/or to airport operations in order to maintain operational safety. This planning effort will ultimately result in a project Construction Safety and Phasing Plan (CSPP). The development of the CSPP takes place through the following five steps:

a. Identify Affected Areas. The airport operator must determine the geographic areas on the airport affected by the construction project. Some, such as a runway extension, will be defined by the project. Others may be variable, such as the location of haul routes and material stockpiles.

b. Describe Current Operations. Identify the normal airport operations in each affected area for each phase of the project. This becomes the baseline from which the impact on operations by construction activities can be measured. This should include a narrative of the typical users and aircraft operating within the affected areas. It should also include information related to airport operations: the Aircraft Reference Code (ACRC) for each runway; Airplane Design Group (ADG) and Taxiway Design Group (TDG)[1] for each affected taxiway; designated approach visibility minimums; available approach and departure procedures; most demanding aircraft; declared distances; available air traffic control services; airport Surface Movement Guidance and Control System plan; and others. The applicable seasons, days and times for certain operations should also be identified as applicable.

c. Allow for Temporary Changes to Operations. To the extent practical, current airport operations should be maintained during the construction. In consultation with airport users, Aircraft Rescue and Fire Fighting (ARFF) personnel, and FAA Air Traffic Organization (ATO) personnel, the airport operator should identify and prioritize the airport's most important operations. The construction activities should be planned, through project phasing if necessary, to safely accommodate these operations. When the construction activities cannot be adjusted to safely maintain current operations, regardless of their importance, then the operations must be revised accordingly. Allowable changes include temporary revisions to approach procedures, restricting certain aircraft to specific runways and taxiways, suspension of certain operations, decreased weights for some aircraft due to shortened runways,

[1] Taxiway Design Group will be introduced in AC 150/5300-13A.

and other changes. An example of a table showing temporary operations versus current operations is shown in Table 3-1 Sample Operations Effects.

d. Take Required Measures to Revised Operations. Once the level and type of aircraft operations to be maintained are identified, the airport operator must determine the measures required to safely conduct the planned operations during the construction. These measures will result in associated costs, which can be broadly interpreted to include not only direct construction costs, but also loss of revenue from impacted operations. Analysis of costs may indicate a need to reevaluate allowable changes to operations. As aircraft operations and allowable changes will vary so widely among airports, this AC presents general guidance on those subjects.

e. Manage Safety Risk. Certain airport projects may require the airport operator to provide a Project Proposal Summary to help the FAA to determine the appropriate level of Safety Risk Management (SRM) documentation. The airport operator must coordinate with the appropriate FAA Airports Regional or District Office early in the development of the CSPP to determine the need for SRM documentation. See FAA Order 5200.11, FAA Airports (ARP) Safety Management System (SMS), for more information. If the FAA requires SRM documentation, the airport operator must at a minimum:

(1) Notify the appropriate FAA Airports Regional or District Office during the project "scope development" phase of any project requiring a CSPP.

(2) Provide documents identified by the FAA as necessary to conduct SRM.

(3) Participate in the SRM process for airport projects.

(4) Provide a representative to participate on the SRM panel.

(5) Ensure that all applicable SRM identified risks elements are recorded and mitigated within the CSPP.

103. Develop a Construction Safety and Phasing Plan (CSPP). Development of an effective CSPP will require familiarity with many other documents referenced throughout this AC. See Appendix 1, Related Reading Material for a list of related reading material.

a. List Requirements. A CSPP must be developed for each on-airfield construction project funded by the Airport Improvement Program (AIP) or the Passenger Facility Charge (PFC) program or located on an airport certificated under Part 139. As per Order 5200.11, such projects do not include construction, rehabilitation, or change of any facility that is entirely outside the air operations area, does not involve any expansion of the facility envelope and does not involve construction equipment, haul routes or placement of material in locations that require access to the air operations area, increase the facility envelope, or impact line-of-sight. Such facilities may include passenger terminals and parking or other structures. However, extraordinary circumstances may trigger the need for a Safety Assessment and a CSPP. The CSPP is subject to subsequent review and approval under the FAA's Safety Risk Management procedures (see paragraph 102.e above). Additional information may be found in Order 5200.11.

b. Prepare a Safety Plan Compliance Document. The Safety Plan Compliance Document (SPCD) details how the contractor will comply with the CSPP. Also, it will not be possible to determine all safety plan details (for example specific hazard equipment and lighting, contractor's points of contact, construction equipment heights) during the development of the CSPP. The successful contractor must define such details by preparing an SPCD that the airport operator reviews for approval prior to issuance of a notice-to-proceed. The SPCD is a subset of the CSPP, similar to how a shop drawing review is a subset to the technical specifications.

FAA Advisory Circular

c. Assume Responsibility for the CSPP. The airport operator is responsible for establishing and enforcing the CSPP. The airport operator may use the services of an engineering consultant to help develop the CSPP. However, writing the CSPP cannot be delegated to the construction contractor. Only those details the airport operator determines cannot be addressed before contract award are developed by the contractor and submitted for approval as the SPCD. The SPCD does not restate nor propose differences to provisions already addressed in the CSPP.

104. Who Is Responsible for Safety During Construction?

a. Establish a Safety Culture. Everyone has a role in operational safety on airports during construction: the airport operator, the airport's consultants, the construction contractor and subcontractors, airport users, airport tenants, ARFF personnel, Air Traffic personnel, including Technical Operations personnel, FAA Airports Division personnel, and others. Close communication and coordination between all affected parties is the key to maintaining safe operations. Such communication and coordination should start at the project scoping meeting and continue through the completion of the project. The airport operator and contractor should conduct onsite safety inspections throughout the project and immediately remedy any deficiencies, whether caused by negligence, oversight, or project scope change.

b. Assess Airport Operator's Responsibilities. An airport operator has overall responsibility for all activities on an airport, including construction. This includes the predesign, design, preconstruction, construction, and inspection phases. Additional information on the responsibilities listed below can be found throughout this AC. The airport operator must:

(1) Develop a CSPP that complies with the safety guidelines of Chapter 2, Construction Safety and Phasing Plans, and Chapter 3, Guidelines for Writing a CSPP. The airport operator may develop the CSPP internally or have a consultant develop the CSPP for approval by the airport operator. For tenant sponsored projects, approve a CSPP developed by the tenant or its consultant.

(2) Require, review and approve the SPCD by the contractor that indicates how it will comply with the CSPP and provides details that cannot be determined before contract award.

(3) Convene a preconstruction meeting with the construction contractor, consultant, airport employees and, if appropriate, tenant sponsor and other tenants to review and discuss project safety before beginning construction activity. The appropriate FAA representatives should be invited to attend the meeting. See AC 150/5300-9, *Predesign, Prebid, and Preconstruction Conferences for Airport Grant Projects*. (Note "FAA" refers to the Airports Regional or District Office, the Air Traffic Organization, Flight Standards Service, and other offices that support airport operations, flight regulations, and construction/environmental policies.)

(4) Ensure contact information is accurate for each representative/point of contact identified in the CSPP and SPCD.

(5) Hold weekly or, if necessary, daily safety meetings with all affected parties to coordinate activities.

(6) Notify users, ARFF personnel, and FAA ATO personnel of construction and conditions that may adversely affect the operational safety of the airport via Notices to Airmen (NOTAM) and other methods, as appropriate. Convene a meeting for review and discussion if necessary.

(7) Ensure construction personnel know of any applicable airport procedures and of changes to those procedures that may affect their work.

(8) Ensure construction contractors and subcontractors undergo training required by the CSPP and SPCD.

(9) **Ensure vehicle and pedestrian operations** addressed in the CSPP and SPCD are coordinated with airport tenants, the airport traffic control tower (ATCT), and construction contractors.

(10) **At certificated airports,** ensure each CSPP and SPCD is consistent with Part 139.

(11) **Conduct inspections** sufficiently frequently to ensure construction contractors and tenants comply with the CSPP and SPCD and that there are no altered construction activities that could create potential safety hazards.

(12) **Resolve safety deficiencies immediately.** At airports subject to 49 CFR Part 1542, Airport Security, ensure construction access complies with the security requirements of that regulation.

(13) **Notify appropriate parties** when conditions exist that invoke provisions of the CSPP and SPCD (for example, implementation of low-visibility operations).

(14) **Ensure prompt submittal of a Notice of Proposed Construction or Alteration** (Form 7460-1) for conducting an aeronautical study of potential obstructions such as tall equipment (cranes, concrete pumps, other.), stock piles, and haul routes. A separate form may be filed for each potential obstruction, or one form may be filed describing the entire construction area and maximum equipment height. In the latter case, a separate form must be filed for any object beyond or higher than the originally evaluated area/height. The FAA encourages online submittal of forms for expediency. The appropriate FAA Airports Regional or District Office can provide assistance in determining which objects require an aeronautical study.

(15) **Promptly notify the FAA Airports Regional or District Office** of any proposed changes to the CSPP prior to implementation of the change. Changes to the CSPP require review and approval by the airport operator and the FAA. Coordinate with appropriate local and other federal government agencies, such as EPA, OSHA, TSA, and the state environmental agency.

c. **Define Construction Contractor's Responsibilities.** The contractor is responsible for complying with the CSPP and SPCD. The contractor must:

(1) **Submit a Safety Plan Compliance Document (SPCD)** to the airport operator describing how it will comply with the requirements of the CSPP and supplying any details that could not be determined before contract award. The SPCD must include a certification statement by the contractor that indicates it understands the operational safety requirements of the CSPP and it asserts it will not deviate from the approved CSPP and SPCD unless written approval is granted by the airport operator. Any construction practice proposed by the contractor that does not conform to the CSPP and SPCD may impact the airport's operational safety and will require a revision to the CSPP and SPCD and re-coordination with the airport operator and the FAA in advance.

(2) **Have available at all times copies** of the CSPP and SPCD for reference by the airport operator and its representatives, and by subcontractors and contractor employees.

(3) **Ensure that construction personnel** are familiar with safety procedures and regulations on the airport. Provide a point of contact who will coordinate an immediate response to correct any construction-related activity that may adversely affect the operational safety of the airport. Many projects will require 24-hour coverage.

(4) **Identify in the SPCD the contractor's on-site employees** responsible for monitoring compliance with the CSPP and SPCD during construction. At least one of these employees must be on-site whenever active construction is taking place.

(5) **Conduct inspections** sufficiently frequently to ensure construction personnel comply with the CSPP and SPCD and that there are no altered construction activities that could create potential safety hazards.

FAA Advisory Circular

(6) Restrict movement of construction vehicles and personnel to permitted construction areas by flagging, barricading, erecting temporary fencing, or providing escorts, as appropriate and as specified in the CSPP and SPCD.

(7) Ensure that no contractor employees, employees of subcontractors or suppliers, or other persons enter any part of the air operations area (AOA) from the construction site unless authorized.

(8) Ensure prompt submittal through the airport operator of Form 7460-1 for the purpose of conducting an aeronautical study of contractor equipment such as tall equipment (cranes, concrete pumps, other equipment), stock piles, and haul routes when different from cases previously filed by the airport operator. The FAA encourages online submittal of forms for expediency.

d. Define Tenant's Responsibilities if planning construction activities on leased property. Airport tenants, such as airline operators, fixed base operators, and FAA ATO/Technical Operations sponsoring construction must:

(1) Develop, or have a consultant develop, a project specific CSPP and submit it to the airport operator for certification and subsequent approval by the FAA. The approved CSPP must be made part of any contract awarded by the tenant for construction work.

(2) In coordination with its contractor, develop an SPCD and submit it to the airport operator for approval to be issued prior to issuance of a Notice to Proceed.

(3) Ensure that construction personnel are familiar with safety procedures and regulations on the airport.

(4) Provide a point of contact of who will coordinate an immediate response to correct any construction-related activity that may adversely affect the operational safety of the airport.

(5) Identify in the SPCD the contractor's on-site employees responsible for monitoring compliance with the CSPP and SPCD during construction. At least one of these employees must be on-site whenever active construction is taking place.

(6) Ensure that no tenant or contractor employees, employees of subcontractors or suppliers, or any other persons enter any part of the AOA from the construction site unless authorized.

(7) Restrict movement of construction vehicles to construction areas by flagging and barricading, erecting temporary fencing, or providing escorts, as appropriate, and as specified in the CSPP and SPCD.

(8) Ensure prompt submittal through the airport operator of Form 7460-1 for the purpose of conducting an aeronautical study of contractor equipment such as tall equipment (cranes, concrete pumps, other.), stock piles, and haul routes. The FAA encourages online submittal of forms for expediency.

Intentionally Left Blank

Chapter 2. Construction Safety and Phasing Plans

Section 1. Basic Considerations

201. Overview. Aviation safety is the primary consideration at airports, especially during construction. The airport operator's Construction Safety and Phasing Plan (CSPP) and the contractor's Safety Plan Compliance Document (SPCD) are the primary tools to ensure safety compliance when coordinating construction activities with airport operations. These documents identify all aspects of the construction project that pose a potential safety hazard to airport operations and outline respective mitigation procedures for each hazard. They must provide all information necessary for the Airport Operations department to conduct airfield inspections and expeditiously identify and correct unsafe conditions during construction. All aviation safety provisions included within the project drawings, contract specifications, and other related documents must also be reflected in the CSPP and SPCD.

202. Assume Responsibility. Operational safety on the airport remains the airport operator's responsibility at all times. The airport operator must develop, certify, and submit for FAA approval each CSPP. It is the airport operator's responsibility to apply the requirements of the FAA approved CSPP. The airport operator must revise the CSPP when conditions warrant changes and must submit the revised CSPP to the FAA for approval. The airport operator must also require and approve a SPCD from the project contractor.

203. Submit the CSPP. Construction Safety and Phasing Plans should be developed concurrently with the project design. Milestone versions of the CSPP should be submitted for review and approval as follows. While these milestones are not mandatory, early submission will help to avoid delays. Submittals are preferred in 8.5 x 11 in or 11 x 17 in format for compatibility with the FAA's Obstruction Evaluation / Airport Airspace Analysis (OE / AAA) process.

a. Submit an Outline/Draft. By the time approximately 25% to 30% of the project design is completed, the principal elements of the CSPP should be established. Airport operators are encouraged to submit an outline or draft, detailing all CSPP provisions developed to date, to the FAA for review at this stage of the project design.

b. Submit a Construction Safety and Phasing Plan (CSPP). The CSPP should be formally submitted for FAA approval when the project design is 80% to 90% complete. Since provisions in the CSPP will influence contract costs, it is important to obtain FAA approval in time to include all such provisions in the procurement contract.

c. Submit a Safety Plan Compliance Document (SPCD). The contractor should submit the SPCD to the airport operator for approval to be issued prior to the Notice to Proceed.

d. Submit CSPP Revisions. All revisions to the CSPP or SPCD should be submitted to the FAA for approval as soon as required changes are identified.

204. Meet CSPP Requirements.

a. To the extent possible, the CSPP should address the following as outlined in Section 2, Plan Requirements and Chapter 3, Guidelines for Writing a CSPP, as appropriate. Details that cannot be determined at this stage are to be included in the SPCD.

(1) Coordination.

(a) (b) (c) Contractor progress meetings.
Scope or schedule changes. FAA
ATO coordination.

(2) Phasing.

(a) Phase elements.

(b) Construction safety drawings

(3) Areas and operations affected by the construction activity.

(a) Identification of affected areas.

(b) Mitigation of effects.

(4) Protection of navigation aids (NAVAIDs).

(5) Contractor access.

(a) Location of stockpiled construction materials.

(b) Vehicle and pedestrian operations.

(6) Wildlife management.

(a) Trash.

(b) Standing water.

(c) Tall grass and seeds.

(d) Poorly maintained fencing and gates.

(e) Disruption of existing wildlife habitat.

(7) Foreign Object Debris (FOD) management.

(8) Hazardous materials (HAZMAT) management

(9) Notification of construction activities.

(a) Maintenance of a list of responsible representatives/ points of contact.

(b) Notices to Airmen (NOTAM).

(c) Emergency notification procedures. (d) Coordination with ARFF Personnel. (e) Notification to the FAA.

(10) Inspection requirements.

(a) Daily (or more frequent) inspections.

(b) Final inspections.

(11) Underground utilities.

(12) Penalties.

(13) Special conditions.

(14) Runway and taxiway visual aids. Marking, lighting, signs, and visual NAVAIDs.

(a) (b) (c) (d) General.

Markings.

Lighting and visual NAVAIDs.

Signs.

(15) Marking and signs for access routes.

(16) Hazard marking and lighting.

(a) Purpose.

(b) Equipment.

(17) Protection. Of runway and taxiway safety areas, object free areas, obstacle free zones, and approach/departure surfaces

(a) Runway Safety Area (RSA).

(b) Runway Object Free Area (ROFA).

(c) Taxiway Safety Area (TSA).

(d) Taxiway Object Free Area (TOFA).

(e) Obstacle Free Zone (OFZ).

(f) Runway approach/departure surfaces.

(18) Other limitations on construction.

(a) Prohibitions.

(b) Restrictions.

b. The Safety Plan Compliance Document (SPCD) should include a general statement by the construction contractor that he/she has read and will abide by the CSPP. In addition, the SPCD must include all supplemental information that could not be included in the CSPP prior to the contract award. The contractor statement should include the name of the contractor, the title of the project CSPP, the approval date of the CSPP, and a reference to any supplemental information (that is, "I , Name of Contractor , have read the Title of Project CSPP, approved on Date , and will abide by it as written and with the following additions as noted:"). The supplemental information in the SPCD should be written to match the format of the CSPP indicating each subject by corresponding CSPP subject number and title. If no supplemental information is necessary for any specific subject, the statement, "No supplemental information," should be written after the corresponding subject title. The SPCD should not duplicate information in the CSPP:

(1) Coordination. Discuss details of proposed safety meetings with the airport operator and with contractor employees and subcontractors.

(2) Phasing. Discuss proposed construction schedule elements, including:

(a) Duration of each phase.

(b) Daily start and finish of construction, including "night only" construction.

(c) Duration of construction activities during:

(i) Normal runway operations.

(ii) Closed runway operations.

(iii) Modified runway "Aircraft Reference Code" usage.

(3) **Areas and operations affected by the construction activity.** These areas and operations should be identified in the CSPP and should not require an entry in the SPCD.

(4) **Protection of NAVAIDs.** Discuss specific methods proposed to protect operating NAVAIDs.

(5) **Contractor access.** Provide the following:

(a) Details on how the contractor will maintain the integrity of the airport security fence (gate guards, daily log of construction personnel, and other).

(b) Listing of individuals requiring driver training (for certificated airports and as requested).

(c) Radio communications.

(i) Types of radios and backup capabilities. (ii)

Who will be monitoring radios.

(iii) Whom to contact if the ATCT cannot reach the contractor's designated person by radio.

(d) Details on how the contractor will escort material delivery vehicles.

(6) **Wildlife management.** Discuss the following:

(a) Methods and procedures to prevent wildlife attraction.

(b) Wildlife reporting procedures.

(7) **Foreign Object Debris (FOD) management.** Discuss equipment and methods for control of FOD, including construction debris and dust.

(8) **Hazardous material (HAZMAT) management.** Discuss equipment and methods for responding to hazardous spills.

(9) **Notification of construction activities.** Provide the following:

(a) Contractor points of contact.

(b) Contractor emergency contact.

(c) Listing of tall or other requested equipment proposed for use on the airport and the timeframe for submitting 7460-1 forms not previously submitted by the airport operator.

(d) Batch plant details, including 7460-1 submittal.

(10) **Inspection requirements.** Discuss daily (or more frequent) inspections and special inspection procedures.

(11) **Underground utilities.** Discuss proposed methods of identifying and protecting underground utilities.

(12) **Penalties.** Penalties should be identified in the CSPP and should not require an entry in the SPCD.

(13) **Special conditions.** Discuss proposed actions for each special condition identified in the CSPP.

(14) **Runway and taxiway visual aids.** Including marking, lighting, signs, and visual NAVAIDs. Discuss proposed visual aids including the following:

FAA Advisory Circular

(a) Equipment and methods for covering signage and airfield lights.

(b) Equipment and methods for temporary closure markings (paint, fabric, other).

(c) Types of temporary Visual Guidance Slope Indicators (VGSI).

(15) Marking and signs for access routes. Discuss proposed methods of demarcating access routes for vehicle drivers.

(16) Hazard marking and lighting. Discuss proposed equipment and methods for identifying excavation areas.

(17) Protection of runway and taxiway safety areas. including object free areas, obstacle free zones, and approach/departure surfaces. Discuss proposed methods of identifying, demarcating, and protecting airport surfaces including:

(a) Equipment and methods for maintaining Taxiway Safety Area standards.

(b) Equipment and methods for separation of construction operations from aircraft operations, including details of barricades.

(18) Other limitations on construction should be identified in the CSPP and should not require an entry in the SPCD.

Section 2. Plan Requirements

205. Coordination. Airport operators, or tenants conducting construction on their leased properties, should use predesign, prebid, and preconstruction conferences to introduce the subject of airport operational safety during construction (see AC 150/5300-9). In addition, the following should be coordinated as required:

a. Contractor Progress Meetings. Operational safety should be a standing agenda item for discussion during progress meetings throughout the project.

b. Scope or Schedule Changes. Changes in the scope or duration of the project may necessitate revisions to the CSPP and review and approval by the airport operator and the FAA.

c. FAA ATO Coordination. Early coordination with FAA ATO is required to schedule airway facility shutdowns and restarts. Relocation or adjustments to NAVAIDs, or changes to final grades in critical areas, may require an FAA flight inspection prior to restarting the facility. Flight inspections must be coordinated and scheduled well in advance of the intended facility restart. Flight inspections may require a reimbursable agreement between the airport operator and FAA ATO. Reimbursable agreements should be coordinated a minimum of 12 months prior to the start of construction. (See 213.e(3)(b) for required FAA notification regarding FAA owned NAVAIDs.)

206. Phasing. Once it has been determined what types and levels of airport operations will be maintained, the most efficient sequence of construction may not be feasible. In such a case, the sequence of construction may be phased to gain maximum efficiency while allowing for the required operations. The development of the resulting construction phases should be coordinated with local Air Traffic personnel and airport users. The sequenced construction phases established in the CSPP must be incorporated into the project design and must be reflected in the contract drawings and specifications.

a. Phase Elements. For each phase the CSPP should detail:

- Areas closed to aircraft operations

- Duration of closures
- Taxi routes
- ARFF access routes
- Construction staging areas
- Construction access and haul routes
- Impacts to NAVAIDs
- Lighting and marking changes
- Available runway length
- Declared distances (if applicable)
- Required hazard marking and lighting
- Lead times for required notifications

b. Construction Safety Drawings. Drawings specifically indicating operational safety procedures and methods in affected areas (that is, construction safety drawings) should be developed for each construction phase. Such drawings should be included in the CSPP as referenced attachments and should likewise be included in the contract drawing package.

207. Areas and Operations Affected by Construction Activity. Runways and taxiways should remain in use by aircraft to the maximum extent possible without compromising safety. Pre-meetings with the FAA Air Traffic Organization (ATO) will support operational simulations. See Chapter 3 for an example of a table showing temporary operations versus current operations.

a. Identification of Affected Areas. Identifying areas and operations affected by the construction will help to determine possible safety problems. The affected areas should be indentified in the construction safety drawings for each construction phase. (See 206.b above.) Of particular concern are:

(1) Closing, or partial closing, of runways, taxiways and aprons. When a runway is partially closed, a portion of the pavement is unavailable for any aircraft operation, meaning taxiing, landing, or taking off in either direction on that pavement is prohibited. A displaced threshold, by contrast, is established to ensure obstacle clearance and adequate safety area for landing aircraft. The pavement prior to the displaced threshold is available for take-off in the direction of the displacement and for landing and taking off in the opposite direction. Misunderstanding this difference, and issuance of a subsequently inaccurate NOTAM, can lead to a hazardous condition.

(2) Closing of Aircraft Rescue and Fire Fighting access routes.

(3) Closing of access routes used by airport and airline support vehicles.

(4) Interruption of utilities, including water supplies for fire fighting.

(5) Approach/departure surfaces affected by heights of objects.

(6) Construction areas, storage areas, and access routes near runways, taxiways, aprons, or helipads.

b. Mitigation of Effects. Establishment of specific procedures is necessary to maintain the safety and efficiency of airport operations. The CSPP must address:

(1) Temporary changes to runway and/or taxi operations.

(2) Detours for ARFF and other airport vehicles.

FAA Advisory Circular

(3) Maintenance of essential utilities.

(4) Temporary changes to air traffic control procedures. Such changes must be coordinated with the ATO.

208. Nav igation Aid (NAVAID) Protection. Before commencing construction activity, parking vehicles, or storing construction equipment and materials near a NAVAID, coordinate with the appropriate FAA ATO/Technical Operations office to evaluate the effect of construction activity and the required distance and direction from the NAVAID. (See paragraph 213.e(3) below.) Construction activities, materials/equipment storage, and vehicle parking near electronic NAVAIDs require special consideration since they may interfere with signals essential to air navigation. If any NAVAID may be affected, the CSPP and SPCD must show an understanding of the "critical area" associated with each NAVAID and describe how it will be protected. Where applicable, the operational critical areas of NAVAIDs should be graphically delineated on the project drawings. Pay particular attention to stockpiling material, as well as to movement and parking of equipment that may interfere with line of sight from the ATCT or with electronic emissions. Interference from construction equipment and activities may require NAVAID shutdown or adjustment of instrument approach minimums for low visibility operations. This condition requires that a NOTAM be filed (see paragraph 213.b below). Construction activities and materials/equipment storage near a NAVAID must not obstruct access to the equipment and instruments for maintenance. Submittal of a 7460-1 form is required for construction vehicles operating near FAA NAVAIDs. (See paragraph 213.e(1) below.)

209. Contractor Access. The CSPP must detail the areas to which the contractor must have access, and explain how contractor personnel will access those areas. Specifically address:

a. Location of Stockpiled Construction Materials. Stockpiled materials and equipment storage are not permitted within the RSA and OFZ, and if possible should not be permitted within the Object Free Area (OFA) of an operational runway. Stockpiling material in the OFA requires submittal of a 7460-1 form and justification provided to the appropriate FAA Airports Regional or District Office for approval. The airport operator must ensure that stockpiled materials and equipment adjacent to these areas are prominently marked and lighted during hours of restricted visibility or darkness. (See paragraph 218.b below.) This includes determining and verifying that materials are stabilized and stored at an approved location so as not to be a hazard to aircraft operations and to prevent attraction of wildlife and foreign object damage. See paragraphs 210 and 211 below.

b. Vehicle and Pedestrian Operations. The CSPP should include specific vehicle and pedestrian requirements. Vehicle and pedestrian access routes for airport construction projects must be controlled to prevent inadvertent or unauthorized entry of persons, vehicles, or animals onto the AOA. The airport operator should coordinate requirements for vehicle operations with airport tenants, contractors, and the FAA air traffic manager. In regard to vehicle and pedestrian operations, the CSPP should include the following, and detail associated training requirements:

(1) Construction site parking. Designate in advance vehicle parking areas for contractor employees to prevent any unauthorized entry of persons or vehicles onto the AOA. These areas should provide reasonable contractor employee access to the job site.

(2) Construction equipment parking. Contractor employees must park and service all construction vehicles in an area designated by the airport operator outside the OFZ and never in the safety area of an active runway or taxiway. Unless a complex setup procedure makes movement of specialized equipment infeasible, inactive equipment must not be parked on a closed taxiway or runway. If it is necessary to leave specialized equipment on a closed taxiway or runway at night, the equipment must be well lighted. Employees should also park construction vehicles outside the OFA when not in use by

construction personnel (for example, overnight, on weekends, or during other periods when construction is not active). Parking areas must not obstruct the clear line of sight by the ATCT to any taxiways or runways under air traffic control nor obstruct any runway visual aids, signs, or navigation aids. The FAA must also study those areas to determine effects on airport design criteria, surfaces established by 14 CFR Part 77, Safe, Efficient Use, and Preservation of the Navigable Airspace (Part 77), and on NAVAIDs and Instrument Approach Procedures (IAP). See paragraph 213.e(1) below for further information.

(3) Access and haul roads. Determine the construction contractor's access to the construction sites and haul roads. Do not permit the construction contractor to use any access or haul roads other than those approved. Access routes used by contractor vehicles must be clearly marked to prevent inadvertent entry to areas open to airport operations. Pay special attention to ensure that if construction traffic is to share or cross any ARFF routes that ARFF right of way is not impeded at any time, and that construction traffic on haul roads does not interfere with NAVAIDs or approach surfaces of operational runways.

(4) Marking and lighting of vehicles in accordance with AC 150/5210-5, Painting, Marking, and Lighting of Vehicles Used on an Airport.

(5) Description of proper vehicle operations on various areas under normal, lost communications, and emergency conditions.

(6) Required escorts.

(7) Training requirements for vehicle drivers to ensure compliance with the airport operator's vehicle rules and regulations. Specific training should be provided to those vehicle operators providing escorts. See AC 150/5210-20, Ground Vehicle Operations on Airports, for information on training and records maintenance requirements.

(8) Situational awareness. Vehicle drivers must confirm by personal observation that no aircraft is approaching their position (either in the air or on the ground) when given clearance to cross a runway, taxiway, or any other area open to airport operations. In addition, it is the responsibility of the escort vehicle driver to verify the movement/position of all escorted vehicles at any given time.

(9) Two-way radio communication procedures.

(a) General. The airport operator must ensure that tenant and construction contractor personnel engaged in activities involving unescorted operation on aircraft movement areas observe the proper procedures for communications, including using appropriate radio frequencies at airports with and without ATCT. When operating vehicles on or near open runways or taxiways, construction personnel must understand the critical importance of maintaining radio contact, as directed by the airport operator, with:

(i) Airport operations

(ii) ATCT

(iii) Common Traffic Advisory Frequency (CTAF), which may include UNICOM, MULTICOM.

(iv) Automatic Terminal Information Service (ATIS). This frequency is useful for monitoring conditions on the airport. Local air traffic will broadcast information regarding construction related runway closures and "shortened" runways on the ATIS frequency.

(b) Areas requiring two-way radio communication with the ATCT. Vehicular traffic crossing active movement areas must be controlled either by two-way radio with the ATCT, escort, flagman, signal light, or other means appropriate for the particular airport.

FAA Advisory Circular

(c) Frequencies to be used. The airport operator will specify the frequencies to be used by the contractor, which may include the CTAF for monitoring of aircraft operations. Frequencies may also be assigned by the airport operator for other communications, including any radio frequency in compliance with Federal Communications Commission requirements. At airports with an ATCT, the airport operator will specify the frequency assigned by the ATCT to be used between contractor vehicles and the ATCT.

(d) Proper radio usage, including read back requirements.

(e) Proper phraseology, including the International Phonetic Alphabet.

(f) Light gun signals. Even though radio communication is maintained, escort vehicle drivers must also familiarize themselves with ATCT light gun signals in the event of radio failure. See the FAA safety placard "Ground Vehicle Guide to Airport Signs and Markings." This safety placard may be downloaded through the Runway Safety Program Web site at http://www.faa.gov/airports/runway_safety/publications/ (See "Signs & Markings Vehicle Dashboard Sticker".) or obtained from the FAA Airports Regional Office.

(10) Maintenance of the secured area of the airport, including:

(a) Fencing and gates. Airport operators and contractors must take care to maintain security during construction when access points are created in the security fencing to permit the passage of construction vehicles or personnel. Temporary gates should be equipped so they can be securely closed and locked to prevent access by animals and unauthorized people. Procedures should be in place to ensure that only authorized persons and vehicles have access to the AOA and to prohibit "piggybacking" behind another person or vehicle. The Department of Transportation (DOT) document DOT/FAA/AR-00/52, Recommended Security Guidelines for Airport Planning and Construction, provides more specific information on fencing. A copy of this document can be obtained from the Airport Consultants Council, Airports Council International, or American Association of Airport Executives.

(b) Badging requirements.

(c) Airports subject to 49 CFR Part 1542, Airport Security, must meet standards for access control, movement of ground vehicles, and identification of construction contractor and tenant personnel.

210. Wildlife Management. The CSPP and SPCD must be in accordance with the airport operator's wildlife hazard management plan, if applicable. See also AC 150/5200-33, Hazardous Wildlife Attractants On or Near Airports, and Certalert 98-05, Grasses Attractive to Hazardous Wildlife. Construction contractors must carefully control and continuously remove waste or loose materials that might attract wildlife. Contractor personnel must be aware of and avoid construction activities that can create wildlife hazards on airports, such as:

a. Trash. Food scraps must be collected from construction personnel activity.

b. Standing Water.

c. Tall Grass and Seeds. Requirements for turf establishment can be at odds with requirements for wildlife control. Grass seed is attractive to birds. Lower quality seed mixtures can contain seeds of plants (such as clover) that attract larger wildlife. Seeding should comply with the guidance in AC 150/5370-10, Standards for Specifying Construction of Airports, Item T-901, Seeding. Contact the local office of the United Sates Department of Agriculture Soil Conservation Service or the State University Agricultural Extension Service (County Agent or equivalent) for assistance and recommendations. These agencies can also provide liming and fertilizer recommendations.

d. Poorly Maintained Fencing and Gates. See 209.b(10)(a) above.

e. Disruption of Existing Wildlife Habitat. While this will frequently be unavoidable due to the nature of the project, the CSPP should specify under what circumstances (location, wildlife type) contractor personnel should immediately notify the airport operator of wildlife sightings.

211. Foreign Object Debris (FOD) Management. Waste and loose materials, commonly referred to as FOD, are capable of causing damage to aircraft landing gears, propellers, and jet engines. Construction contractors must not leave or place FOD on or near active aircraft movement areas. Materials capable of creating FOD must be continuously removed during the construction project. Fencing (other than security fencing) may be necessary to contain material that can be carried by wind into areas where aircraft operate. See AC 150/5210-24, Foreign Object Debris (FOD) Management.

212. Hazardous Materials (HAZMAT) Management. Contractors operating construction vehicles and equipment on the airport must be prepared to expeditiously contain and clean-up spills resulting from fuel or hydraulic fluid leaks. Transport and handling of other hazardous materials on an airport also requires special procedures. See AC 150/5320-15, Management of Airport Industrial Waste.

213. Notification of Construction Activities. The CSPP and SPCD must detail procedures for the immediate notification of airport users and the FAA of any conditions adversely affecting the operational safety of the airport. It must address the notification actions described below, as applicable.

a. List of Responsible Representatives/ points of contact for all involved parties, and procedures for contacting each of them, including after hours.

b. NOTAMs. Only the airport operator may initiate or cancel NOTAMs on airport conditions, and is the only entity that can close or open a runway. The airport operator must coordinate the issuance, maintenance, and cancellation of NOTAMs about airport conditions resulting from construction activities with tenants and the local air traffic facility (control tower, approach control, or air traffic control center), and must provide information on closed or hazardous conditions on airport movement areas to the FAA Flight Service Station (FSS) so it can issue a NOTAM. The airport operator must file and maintain a list of authorized representatives with the FSS. Refer to AC 150/5200-28, Notices to Airmen (NOTAMs) for Airport Operators, for a sample NOTAM form. Only the FAA may issue or cancel NOTAMs on shutdown or irregular operation of FAA owned facilities. Any person having reason to believe that a NOTAM is missing, incomplete, or inaccurate must notify the airport operator. See paragraph 207.a(1) above regarding issuing NOTAMs for partially closed runways versus runways with displaced thresholds.

c. Emergency notification procedures for medical, fire fighting, and police response.

d. Coordination with ARFF. The CSPP must detail procedures for coordinating through the airport sponsor with ARFF personnel, mutual aid providers, and other emergency services if construction requires:

- The deactivation and subsequent reactivation of water lines or fire hydrants, or
- The rerouting, blocking and restoration of emergency access routes, or
- The use of hazardous materials on the airfield.

e. Notification to the FAA.

(1) Part 77. Any person proposing construction or alteration of objects that affect navigable airspace, as defined in Part 77, must notify the FAA. This includes construction equipment and proposed

FAA Advisory Circular

parking areas for this equipment (i.e. cranes, graders, other equipment) on airports. FAA Form 7460-1, Notice of Proposed Construction or Alteration, can be used for this purpose and submitted to the appropriate FAA Airports Regional or District Office. See Appendix 1, Related Reading Material, to download the form. Further guidance is available on the FAA web site at oeaaa.faa.gov.

(2) Part 157. With some exceptions, Title 14 CFR Part 157, Notice of Construction, Alteration, Activation, and Deactivation of Airports, requires that the airport operator notify the FAA in writing whenever a non-Federally funded project involves the construction of a new airport; the construction, realigning, altering, activating, or abandoning of a runway, landing strip, or associated taxiway; or the deactivation or abandoning of an entire airport. Notification involves submitting FAA Form 7480-1, Notice of Landing Area Proposal, to the nearest FAA Airports Regional or District Office. See Appendix 1, Related Reading Material to download the form.

(3) NAVAIDS. For emergency (short-notice) notification about impacts to both airport owned and FAA owned NAVAIDs, contact: 866-432-2622.

(a) Airport owned/FAA maintained. If construction operations require a shutdown of more than 24 hours, or more than 4 hours daily on consecutive days, of a NAVAID owned by the airport but maintained by the FAA, provide a 45-day minimum notice to FAA ATO/Technical Operations prior to facility shutdown.

(b) FAA owned.

(i) General. The airport operator must notify the appropriate FAA ATO Service Area Planning and Requirements (P&R) Group a minimum of 45 days prior to implementing an event that causes impacts to NAVAIDs. (Impacts to FAA equipment covered by a Reimbursable Agreement (RA) do not have to be reported by the airport operator.)

(ii) Coordinate work for an FAA owned NAVAID shutdown with the local FAA ATO/Technical Operations office, including any necessary reimbursable agreements and flight checks. Detail procedures that address unanticipated utility outages and cable cuts that could impact FAA NAVAIDs. In addition, provide seven days notice to schedule the actual shutdown.

214. Inspection Requirements.

a. Daily Inspections. Inspections should be conducted at least daily, but more frequently if necessary to ensure conformance with the CSPP. A sample checklist is provided in Appendix 3, Safety and Phasing Plan Checklist. See also AC 150/5200-18, Airport Safety Self-Inspection.

b. Final Inspections. New runways and extended runway closures may require safety inspections at certificated airports prior to allowing air carrier service. Coordinate with the FAA Airport Certification Safety Inspector (ACSI) to determine if a final inspection will be necessary.

215. Underground Utilities. The CSPP and/or SPCD must include procedures for locating and protecting existing underground utilities, cables, wires, pipelines, and other underground facilities in excavation areas. This may involve coordinating with public utilities and FAA ATO/Technical Operations. Note that “One Call” or “Miss Utility” services do not include FAA ATO/Technical Operations

216. Penalties. The CSPP should detail penalty provisions for noncompliance with airport rules and regulations and the safety plans (for example, if a vehicle is involved in a runway incursion). Such penalties typically include rescission of driving privileges or access to the AOA.

217. Special Conditions. The CSPP must detail any special conditions that affect the operation of the

airport and will require the activation of any special procedures (for example, low-visibility operations, snow removal, aircraft in distress, aircraft accident, security breach, Vehicle / Pedestrian Deviation (VPD) and other activities requiring construction suspension/resumption).

218. Runway and Taxiway Visual Aids. Includes marking, lighting, signs, and visual NAVAIDS. The CSPP must ensure that areas where aircraft will be operating are clearly and visibly separated from construction areas, including closed runways. Throughout the duration of the construction project, verify that these areas remain clearly marked and visible at all times and that marking, lighting, signs, and visual NAVAIDs remain in place and operational. The CSPP must address the following, as appropriate:

a. General. Airport markings, lighting, signs, and visual NAVAIDs must be clearly visible to pilots, not misleading, confusing, or deceptive. All must be secured in place to prevent movement by prop wash, jet blast, wing vortices, or other wind currents and constructed of materials that would minimize damage to an aircraft in the event of inadvertent contact.

b. Markings. Markings must be in compliance with the standards of AC 150/5340-1, Standards for Airport Markings. Runways and runway exit taxiways closed to aircraft operations are marked with a yellow X. The preferred visual aid to depict temporary runway closure is the lighted X signal placed on or near the runway designation numbers. (See paragraph 218.b(1)(b) below.)

(1) Closed Runways and Taxiways.

(a) Permanently Closed Runways. For runways, obliterate the threshold marking, runway designation marking, and touchdown zone markings, and place Xs at each end and at 1,000-foot (300 m) intervals.

(b) Temporarily Closed Runways. For runways that have been temporarily closed, place an X at the each end of the runway directly on or as near as practicable to the runway designation numbers. Figure 2-1 illustrates.

Figure 2-1 Markings for a Temporarily Closed Runway

(c) Partially Closed Runways and Displaced Thresholds. When threshold markings are needed to identify the temporary beginning of the runway that is available for landing, the markings must comply with AC 150/5340-1. An X is not used on a partially closed runway or a runway with a displaced threshold. See paragraph 207.a(1) above for the difference between partially closed runways and runways with displaced thresholds.

(i) Partially Closed Runways. Pavement markings for temporary closed portions of the runway consist of a runway threshold bar and yellow chevrons to identify pavement areas that are unsuitable for takeoff or landing (see AC 150/5340-1).

(ii) Displaced Thresholds. Pavement markings for a displaced threshold consist of a runway threshold bar and white arrowheads with and without arrow shafts. These markings are required to identify the portion of the runway before the displaced threshold to provide centerline guidance for pilots during approaches, takeoffs, and landing rollouts from the opposite direction. See AC 150/5340-1.

(d) Taxiways.

(i) Permanently Closed Taxiways. AC 150/5300-13 notes that it is preferable to remove the pavement, but for pavement that is to remain, place an X at the entrance to both ends of the closed section. Obliterate taxiway centerline markings, including runway leadoff lines, leading to the closed taxiway. Figure 2-2 illustrates.

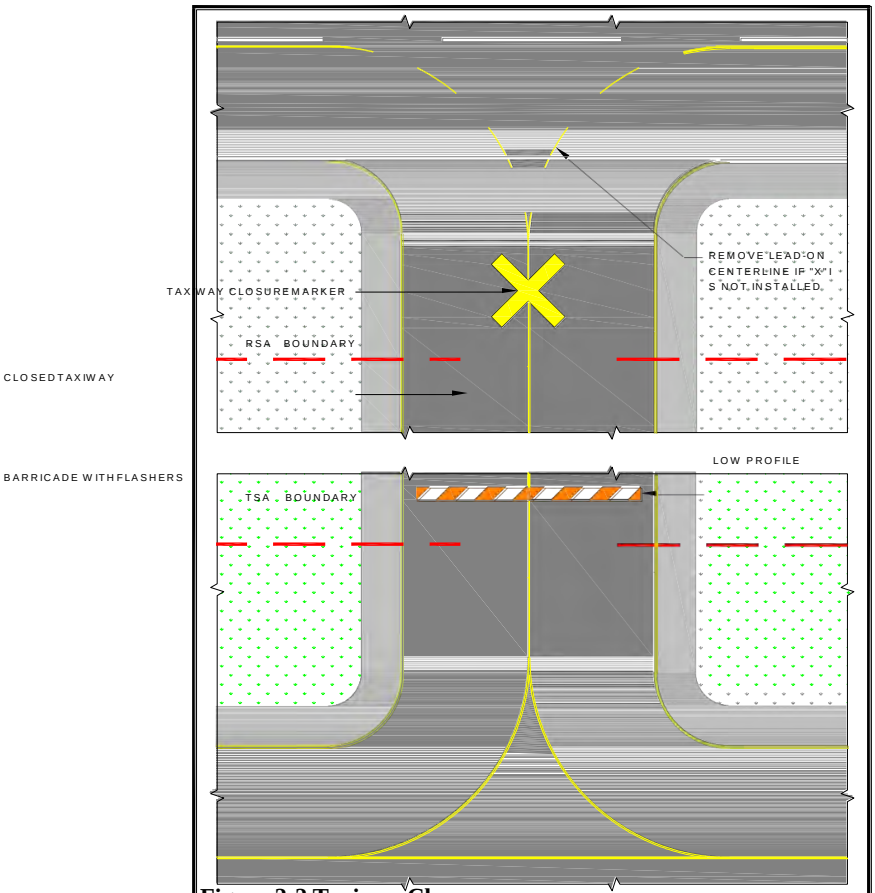

Figure 2-2 Taxiway Closure

(ii) Temporarily Closed Taxiways. Place barricades outside the safety area of intersecting taxiways. For runway/taxiway intersections, place an X at the entrance to the closed taxiway from the runway. If the taxiway will be closed for an extended period, obliterate taxiway centerline markings, including runway leadoff lines, leading to the closed section. If the centerline markings will be reused upon reopening the taxiway, it is preferable to paint over the marking. This will result in less damage to the pavement when the upper layer of paint is ultimately removed.

(e) Temporarily Closed Airport. When the airport is closed temporarily, mark all the runways as closed.

FAA Advisory Circular

(2) If unable to paint temporary markings on the pavement, construct them from any of the following materials: fabric, colored plastic, painted sheets of plywood, or similar materials. They must be properly configured and appropriately secured to prevent movement by prop wash, jet blast, or other wind currents.

(3) It may be necessary to remove or cover runway markings, including but not limited to, runway designation markings, threshold markings, centerline markings, edge stripes, touchdown zone markings and aiming point markings, depending on the length of construction and type of activity at the airport. When removing runway markings, apply the same treatment to areas between stripes or numbers, as the cleaned area will appear to pilots as a marking in the shape of the treated area.

(4) If it is not possible to install threshold bars, chevrons, and arrows on the pavement, temporary outboard markings may be used. Locate them outside of the runway pavement surface on both sides of the runway. The dimension along the runway direction must be the same as if installed on the pavement. The lateral dimension must be at least one-half that of on-pavement markings. If the markings are not discernible on grass or snow, apply a black background with appropriate material over the ground to ensure they are clearly visible.

(5) The application rate of paint to mark a short-term temporary runway and taxiway markings may deviate from the standard (see Item P-620, "Runway and Taxiway Painting," in AC 150/5370-10), but the dimensions must meet the existing standards.

c. Lighting and Visual NAVAIDs. This paragraph refers to standard runway and taxiway lighting systems. See below for hazard lighting. Lighting must be in conformance with AC 150/5340-30, Design and Installation Details for Airport Visual Aids, and AC 150/5345-50, Specification for Portable Runway and Taxiway Lights. When disconnecting runway and taxiway lighting fixtures, disconnect the associated isolation transformers. Alternately, cover the light fixture in such a way as to prevent light leakage. Avoid removing the lamp from energized fixtures because an excessive number of isolation transformers with open secondaries may damage the regulators and/or increase the current above its normal value. Secure, identify, and place any above ground temporary wiring in conduit to prevent electrocution and fire ignition sources.

(1) Permanently Closed Runways and Taxiways. For runways and taxiways that have been permanently closed, disconnect the lighting circuits.

(2) Temporarily Closed Runways. If available, use a lighted X, both at night and during the day, placed at each end of the runway facing the approach. The use of a lighted X is required if night work requires runway lighting to be on. See AC 150/5345-55, Specification for L-893, Lighted Visual Aid to Indicate Temporary Runway Closure. For runways that have been temporarily closed, but for an extended period, and for those with pilot controlled lighting, disconnect the lighting circuits or secure switches to prevent inadvertent activation. For runways that will be opened periodically, coordinate procedures with the FAA air traffic manager or, at airports without an ATCT, the airport operator. Activate stop bars if available. Figure 2-3 shows a lighted X by day. Figure 2-4 shows a lighted X at night.

Figure 2-3 Lighted X in Daytime

Figure 2-4 Lighted X at Night

(3) Partially Closed Runways and Displaced Thresholds. When a runway is partially closed, a portion of the pavement is unavailable for any aircraft operation, meaning taxiing and landing or

FAA Advisory Circular

taking off in either direction. A displaced threshold, by contrast, is put in place to ensure obstacle clearance by landing aircraft. The pavement prior to the displaced threshold is available for takeoff in the direction of the displacement, and for landing and takeoff in the opposite direction. Misunderstanding this difference and issuance of a subsequently inaccurate NOTAM can result in a hazardous situation. For both partially closed runways and displaced thresholds, approach lighting systems at the affected end must be placed out of service

(a) Partially Closed Runways. Disconnect edge and threshold lights on that part of the runway at and behind the threshold (that is, the portion of the runway that is closed). Alternately, cover the light fixture in such a way as to prevent light leakage.

(b) Displaced Thresholds. Edge lighting in the area of the displacement emits red light in the direction of approach and yellow light in the opposite direction. Centerline lights are blanked out in the direction of approach if the displacement is 700 ft or less. If the displacement is over 700 ft, place the centerline lights out of service. See AC 150/5340-30 for details on lighting displaced thresholds.

(c) Temporary runway thresholds and runway ends must be lighted if the runway is lighted and it is the intended threshold for night landings or instrument meteorological conditions.

(d) A temporary threshold on an unlighted runway may be marked by retroreflective, elevated markers in addition to markings noted in paragraph 218.b(1)(c) above. Markers seen by aircraft on approach are green. Markers at the rollout end of the runway are red. At certificated airports, temporary elevated threshold markers must be mounted with a frangible fitting (see 14 CFR Part 139.309). At non-certificated airports, the temporary elevated threshold markings may either be mounted with a frangible fitting or be flexible. See AC 150/5345-39, Specification for L-853, Runway and Taxiway Retroreflective Markers.

(e) Temporary threshold lights and end lights and related visual NAVAIDs are installed outboard of the edges of the full-strength pavement only when they cannot be installed on the pavement. They are installed with bases at grade level or as low as possible, but not more than 3 in (7.6 cm) above ground. When any portion of a base is above grade, place properly compacted fill around the base to minimize the rate of gradient change so aircraft can, in an emergency, cross at normal landing or takeoff speeds without incurring significant damage. See AC 150/5370-10.

(f) Maintain threshold and edge lighting color and spacing standards as described in AC 150/5340-30. Battery powered, solar, or portable lights that meet the criteria in AC 150/5345-50 may be used. These systems are intended primarily for visual flight rules (VFR) aircraft operations but may be used for instrument flight rules (IFR) aircraft operations, upon individual approval from the Flight Standards Division of the applicable FAA Regional Office.

(g) Reconfigure yellow lenses (caution zone), as necessary. If the runway has centerline lights, reconfigure the red lenses, as necessary, or place the centerline lights out of service.

(h) Relocate the visual glide slope indicator (VGSI), such as VASI and PAPI; other airport lights, such as Runway End Identifier Lights (REIL); and approach lights to identify the temporary threshold. Another option is to disable the VGSI or any equipment that would give misleading indications to pilots as to the new threshold location. Installation of temporary visual aids may be necessary to provide adequate guidance to pilots on approach to the affected runway. If the FAA owns and operates the VGSI, coordinate its installation or disabling with the local ATO/Technical Operations Office. Relocation of such visual aids will depend on the duration of the project and the benefits gained from the relocation, as this can result in great expense.

(i) Issue a NOTAM to inform pilots of temporary lighting conditions.

(4) Temporarily Closed Taxiways. If possible, deactivate the taxiway lighting circuits. When deactivation is not possible (for example other taxiways on the same circuit are to remain open),

cover the light fixture in such a way as to prevent light leakage.

d. Signs. To the extent possible, signs must be in conformance with AC 150/5345-44, Specification for Runway and Taxiway Signs and AC 150/5340-18, Standard for Airport Sign Systems. Any time a sign does not serve its normal function; it must be covered or removed to prevent misdirecting pilots.
Note that information signs identifying a crossing taxiway continue to perform their normal function even if the crossing taxiway is closed. For long term construction projects, consider relocating signs, especially runway distance remaining signs.

219. Marking and Signs for Access Routes. The CSPP should indicate that pavement markings and signs for construction personnel will conform to AC 150/5340-18 and, to the extent practicable, with the Federal Highway Administration Manual on Uniform Traffic Control Devices (MUTCD) and/or State highway specifications. Signs adjacent to areas used by aircraft must comply with the frangibility requirements of AC 150/5220-23, Frangible Connections, which may require modification to size and height guidance in the MUTCD.

220. Hazard Marking, Lighting and Signing.

a. Hazard Marking and Lighting Prevents Pilots from entering areas closed to aircraft, and prevents construction personnel from entering areas open to aircraft. The CSPP must specify prominent, comprehensible warning indicators for any area affected by construction that is normally accessible to aircraft, personnel, or vehicles. Hazard marking and lighting must also be specified to identify open manholes, small areas under repair, stockpiled material, waste areas, and areas subject to jet blast. Also consider less obvious construction-related hazards and include markings to identify FAA, airport, and National Weather Service facilities cables and power lines; instrument landing system (ILS) critical areas; airport surfaces, such as RSA, OFA, and OFZ; and other sensitive areas to make it easier for contractor personnel to avoid these areas.

b. Equipment.

(1) Barricades, including traffic cones, (weighted or sturdily attached to the surface) are acceptable methods used to identify and define the limits of construction and hazardous areas on airports. Careful consideration must be given to selecting equipment that poses the least danger to aircraft but is sturdy enough to remain in place when subjected to typical winds, prop wash and jet blast. The spacing of barricades must be such that a breach is physically prevented barring a deliberate act. For example, if barricades are intended to exclude vehicles, gaps between barricades must be smaller than the width of the excluded vehicles, generally 4 ft. Provision must be made for ARFF access if necessary. If barricades are intended to exclude pedestrians, they must be continuously linked. Continuous linking may be accomplished through the use of ropes, securely attached to prevent FOD.

(2) Lights must be red, either steady burning or flashing, and must meet the luminance requirements of the State Highway Department. Batteries powering lights will last longer if lights flash. Lights must be mounted on barricades and spaced at no more than 10 ft. Lights must be operated between sunset and sunrise and during periods of low visibility whenever the airport is open for operations. They may be operated by photocell, but this may require that the contractor turn them on manually during periods of low visibility during daytime hours.

(3) Supplement barricades with signs (for example “No Entry,” “No Vehicles”) as necessary.

(4) Air Operations Area – General. Barricades are not permitted in any active safety area. Within a runway or taxiway object free area, and on aprons, use orange traffic cones, flashing or steady burning red lights as noted above, collapsible barricades marked with diagonal, alternating orange and

FAA Advisory Circular

white stripes; and/or signs to separate all construction/maintenance areas from the movement area. Barricades may be supplemented with alternating orange and white flags at least 20 by 20 in (50 by 50 cm) square and securely fastened to eliminate FOD. All barricades adjacent to any open runway or taxiway / taxilane safety area, or apron must be as low as possible to the ground, and no more than 18 in high, exclusive of supplementary lights and flags. Barricades must be of low mass; easily collapsible upon contact with an aircraft or any of its components; and weighted or sturdily attached to the surface to prevent displacement from prop wash, jet blast, wing vortex, or other surface wind currents. If affixed to the surface, they must be frangible at grade level or as low as possible, but not to exceed 3 in (7.6 cm) above the ground. Figure 2-5 and Figure 2-6 show sample barricades with proper coloring and flags.

Figure 2-5 Interlocking Barricades

Figure 2-6 Low Profile Barricades

(5) Air Operations Area – Runway/Taxiway Intersections. Use highly reflective barricades with lights to close taxiways leading to closed runways. Evaluate all operating factors when determining how to mark temporary closures that can last from 10 to 15 minutes to a much longer period of time. However, even for closures of relatively short duration, close all taxiway/runway intersections with barricades. The use of traffic cones is appropriate for short duration closures.

(6) Air Operations Area – Other. Beyond runway and taxiway object free areas and

aprons, barricades intended for construction vehicles and personnel may be many different shapes and made from various materials, including railroad ties, sawhorses, jersey barriers, or barrels.

(7) Maintenance. The construction specifications must include a provision requiring the contractor to have a person on call 24 hours a day for emergency maintenance of airport hazard lighting and barricades. The contractor must file the contact person's information with the airport operator. Lighting should be checked for proper operation at least once per day, preferably at dusk.

221. Protection of Runway and Taxiway Safety Areas. Runway and taxiway safety areas, Obstacle Free zones (OFZ), object free areas (OFA), and approach surfaces are described in AC 150/5300-13. Protection of these areas includes limitations on the location and height of equipment and stockpiled material. An FAA airspace study may be required. Coordinate with the appropriate FAA Airports Regional or District Office if there is any doubt as to requirements or dimensions (See paragraph 213.e above.) as soon as the location and height of materials or equipment are known. The CSPP should include drawings showing all safety areas, object free areas, obstacle free zones and approach departure surfaces affected by construction.

a. Runway Safety Area (RSA). A runway safety area is the defined surface surrounding the runway prepared or suitable for reducing the risk of damage to airplanes in the event of an undershoot, overshoot, or excursion from the runway (see AC 150/5300-13). Construction activities within the existing RSA are subject to the following conditions:

(1) No construction may occur within the existing RSA while the runway is open for aircraft operations. The RSA dimensions may be temporarily adjusted if the runway is restricted to aircraft operations requiring an RSA that is equal to the RSA width and length beyond the runway ends available during construction. (see AC 150/5300-13). The temporary use of declared distances and/or partial runway closures may provide the necessary RSA under certain circumstances. Coordinate with the appropriate FAA Airports Regional or District Office to have declared distances information published. See AC 150/5300-13 for guidance on the use of declared distances.

(2) The airport operator must coordinate the adjustment of RSA dimensions as permitted above with the appropriate FAA Airports Regional or District Office and the local FAA air traffic manager and issue a NOTAM.

(3) The CSPP and SPCD must provide procedures for ensuring adequate distance for protection from blasting operations, if required by operational considerations.

(4) Excavations.

(a) Open trenches or excavations are not permitted within the RSA while the runway is open. If possible, backfill trenches before the runway is opened. If the runway must be opened before excavations are backfilled, cover the excavations appropriately. Covering for open trenches must be designed to allow the safe operation of the heaviest aircraft operating on the runway across the trench without damage to the aircraft.

(b) Construction contractors must prominently mark open trenches and excavations at the construction site with red or orange flags, as approved by the airport operator, and light them with red lights during hours of restricted visibility or darkness.

(5) Erosion Control. Soil erosion must be controlled to maintain RSA standards, that is, the RSA must be cleared and graded and have no potentially hazardous ruts, humps, depressions, or other surface variations, and capable, under dry conditions, of supporting snow removal equipment, aircraft rescue and fire fighting equipment, and the occasional passage of aircraft without causing structural damage to the aircraft.

b. Runway Object Free Area (ROFA). Construction, including excavations, may be permitted in the ROFA. However, equipment must be removed from the ROFA when not in use, and material should not be stockpiled in the ROFA if not necessary. Stockpiling material in the OFA requires submittal of a 7460-1 form and justification provided to the appropriate FAA Airports Regional or District Office for approval.

c. Taxiway Safety Area (TSA). A taxiway safety area is a defined surface alongside the taxiway prepared or suitable for reducing the risk of damage to an airplane unintentionally departing the taxiway. (See AC 150/5300-13.) Construction activities within the TSA are subject to the following conditions:

(1) No construction may occur within the TSA while the taxiway is open for aircraft operations. The TSA dimensions may be temporarily adjusted if the taxiway is restricted to aircraft operations requiring a TSA that is equal to the TSA width available during construction (see AC 150/5300-13, Table 4-1).

(2) The airport operator must coordinate the adjustment of the TSA width as permitted above with the appropriate FAA Airports Regional or District Office and the FAA air traffic manager and issue a NOTAM.

(3) The CSPP and SPCD must provide procedures for ensuring adequate distance for protection from blasting operations.

(4) Excavations.

(a) Open trenches or excavations are not permitted within the TSA while the taxiway is open. If possible, backfill trenches before the taxiway is opened. If the taxiway must be opened before excavations are backfilled, cover the excavations appropriately. Covering for open trenches must be designed to allow the safe operation of the heaviest aircraft operating on the taxiway across the trench without damage to the aircraft.

(b) Construction contractors must prominently mark open trenches and excavations at the construction site with red or orange flags, as approved by the airport operator, and light them with red lights during hours of restricted visibility or darkness.

(5) Erosion Control. Soil erosion must be controlled to maintain TSA standards, that is, the TSA must be cleared and graded and have no potentially hazardous ruts, humps, depressions, or other surface variations, and capable, under dry conditions, of supporting snow removal equipment, aircraft rescue and fire fighting equipment, and the occasional passage of aircraft without causing structural damage to the aircraft.

d. Taxiway Object Free Area (TOFA). Unlike the Runway Object Free Area, aircraft wings regularly penetrate the taxiway object free area during normal operations. Thus the restrictions are more stringent. Except as provided below, no construction may occur within the taxiway object free area while the taxiway is open for aircraft operations.

(1) The taxiway object free area dimensions may be temporarily adjusted if the taxiway is restricted to aircraft operations requiring a taxiway object free area that is equal to the taxiway object free area width available.

(2) Offset taxiway pavement markings may be used as a temporary measure to provide the required taxiway object free area. Where offset taxiway pavement markings are provided, centerline lighting or reflectors are required.

(3) Construction activity may be accomplished without adjusting the width of the taxiway object free area, subject to the following restrictions:

(a) Appropriate NOTAMs are issued.

(b) Marking and lighting meeting the provisions of paragraphs 218 and 220 above are implemented.

(c) Five-foot clearance is maintained between equipment and materials and any part of an aircraft (includes wingtip overhang). In these situations, flaggers must be used to direct construction equipment, and wing walkers will be necessary to guide aircraft. Wing walkers should be airline/aviation personnel rather than construction workers. If such clearance can only be maintained if an aircraft does not have full use of the entire taxiway width (with its main landing gear at the edge of the pavement), then it will be necessary to move personnel and equipment for the passage of that aircraft.

e. Obstacle Free Zone (OFZ). In general, personnel, material, and/or equipment may not penetrate the OFZ while the runway is open for aircraft operations. If a penetration to the OFZ is necessary, it may be possible to continue aircraft operations through operational restrictions. Coordinate with the FAA through the appropriate FAA Airports Regional or District Office.

f. Runway Approach/Departure Areas and Clearways. All personnel, materials, and/or equipment must remain clear of the applicable threshold siting surfaces, as defined in Appendix 2, "Threshold Siting Requirements," of AC 150/5300-13. Objects that do not penetrate these surfaces may still be obstructions to air navigation and may affect standard instrument approach procedures. Coordinate with the FAA through the appropriate FAA Airports Regional or District Office.

(1) Construction activity in a runway approach/departure area may result in the need to partially close a runway or displace the existing runway threshold. Partial runway closure, displacement of the runway threshold, as well as closure of the complete runway and other portions of the movement area also require coordination through the airport operator with the appropriate FAA air traffic manager (FSS if non-towered) and ATO/Technical Operations (for affected NAVAIDS) and airport users.

(2) Caution regarding partial runway closures. When filing a NOTAM for a partial runway closure, clearly state to OCC personnel that the portion of pavement located prior to the threshold is not available for landing and departing traffic. In this case, the threshold has been moved for both landing and takeoff purposes (this is different than a displaced threshold). There may be situations where the portion of closed runway is available for taxiing only. If so, the NOTAM must reflect this condition).

(3) Caution regarding displaced thresholds. : Implementation of a displaced threshold affects runway length available for aircraft landing over the displacement. Depending on the reason for the displacement (to provide obstruction clearance or RSA), such a displacement may also require an adjustment in the landing distance available and accelerate-stop distance available in the opposite direction. If project scope includes personnel, equipment, excavation, other work. within the existing RSA of any usable runway end, do not implement a displaced threshold unless arrivals and departures toward the construction activity are prohibited. Instead, implement a partial closure.

222. Other Limitations on Construction. The CSPP must specify any other limitations on construction, including but not limited to:

a. Prohibitions.

(1) No use of tall equipment (cranes, concrete pumps, and so on) unless a 7460-1 determination letter is issued for such equipment.

(2) No use of open flame welding or torches unless fire safety precautions are provided and the airport operator has approved their use.

(3) No use of electrical blasting caps on or within 1,000 ft (300 m) of the airport property.

FAA Advisory Circular

See AC 150/5370-10.

(4) **No use of flare pots** within the AOA.

b. Restrictions.

(1) **Construction suspension required during specific airport operations.**

(2) **Areas that cannot be worked on simultaneously.**

(3) **Day or night construction restrictions.**

(4) **Seasonal construction restrictions.**

Intentionally Left Blank

Chapter 3. Guidelines for Writing a CSPP

301. General Requirements. The CSPP is a standalone document written to correspond with the subjects outlined in Chapter 2, Section 1, paragraph 204. The CSPP is organized by numbered sections corresponding to each subject listed in Chapter 2, Section 1, paragraph 204, and described in detail in Chapter 2, Section 2. Each section number and title in the CSPP matches the corresponding subject outlined in Chapter 2, paragraph 204 (for example, 1. Coordination, 2. Phasing, 3. Areas and Operations Affected by the Construction Activity, and so on.). With the exception of the project scope of work outlined in Section 2. Phasing, only subjects specific to operational safety during construction should be addressed.

302. Applicability of Subjects. Each section should, to the extent practical, focus on the specific subject. Where an overlapping requirement spans several sections, the requirement should be explained in detail in the most applicable section. A reference to that section should be included in all other sections where the requirement may apply. For example, the requirement to protect existing underground FAA Instrument Landing System (ILS) cables during trenching operations could be considered FAA ATO coordination (Section 1. Coordination, paragraph 205.c), an area and operation affected by the construction activity (Section 3. Areas and Operations Affected by the Construction Activity, paragraph 207.a(4)), a protection of a NAVAID (Section 4. Protection of Navigational Aids (NAVAIDs),paragraph 208), or a notification to the FAA of construction activities (Section 9. Notification of Construction Activities, paragraph 210.e(3)(b)). However, it is more specifically an underground utility requirement (Section 11. Underground Utilities, paragraph 215). The procedure for protecting underground ILS cables during trenching operations should therefore be described in Section 11: "*The contractor must coordinate with the local FAA System Support Center (SSC) to mark existing ILS cable routes along Runway 17-35. The ILS cables will be located by hand digging whenever the trenching operation moves within 10 feet of the cable markings.*" All other applicable sections should include a reference to Section 11: "*ILS cables shall be identified and protected as described in Section 11*" or "*See Section 11 for ILS cable identification and protection requirements.*" Thus, the CSPP should be considered as a whole, with no need to duplicate responses to related issues.

303. Graphical Representations. Construction safety drawings should be included in the CSPP as attachments. When other graphical representations will aid in supporting written statements, the drawings, diagrams, and/or photographs should also be attached to the CSPP. References should be made in the CSPP to each graphical attachment and may be made in multiple sections.

304. Reference Documents. The CSPP must not incorporate a document by reference unless reproduction of the material in that document is prohibited. In that case, either copies of or a source for the referenced document must be provided to the contractor.

305. Restrictions. The CSPP should not be considered as a project design review document. The CSPP should also avoid mention of permanent ("as-built") features such as pavements, markings, signs, and lighting, except when such features are intended to aid in maintaining operational safety during the construction.

306. Coordination. Include in this section a detailed description of conferences and meetings both before and during the project. Include appropriate information from AC 150/5300-9. Discuss coordination procedures and schedules for each required FAA ATO airway facility shutdown and restart and all required flight inspections.

307. Phasing. Include in this section a detailed scope of work description for the project as a whole and each phase of work covered by the CSPP. This includes all locations and durations of the work proposed. Attach drawings to graphically support the written scope of work. Detail in this section the sequenced phases of the proposed construction. Include a reference to paragraph 308 below, as appropriate.

308. Areas and Operations Affected By Construction. Focus in this section on identifying the areas and operations affected by the construction. Describe corresponding mitigation that is not covered in detail elsewhere in the CSPP. Include references to paragraphs below as appropriate. Attach drawings as necessary to graphically describe affected areas and mechanisms proposed. Tables and charts such as the following may be helpful in highlighting issues to be addressed.

Table 3-1 Sample Operations Effects

Project	Runway 15-33 Reconstruction	
Phase	Phase II: Reconstruct Runway 15 End	
Scope of Work	Reconstruct 1,000 ft of north end of Runway 15-33 with Portland Cement Concrete (PCC).	
Operational Requirements	**Normal (Existing)**	**Phase II (Anticipated)**
Runway 15 Average Aircraft Operations	Carrier: 52 /day GA: 26 /day Military: 11 /day	Carrier: 52 / day GA: 20 / day Military: 0 /day
Runway 33 Average Aircraft Operations	Carrier: 40 /day GA: 18 /day Military: 10 /day	Carrier: 20 /day GA: 5 /day Military: 0 /day
Runway 15-33 ARC	C-IV	C-IV
Runway 15 Approach Visibility Minimums	¾ mile	1 mile
Runway 33 Approach Visibility Minimums	¾ mile	1 mile
Runway 15 Declared Distances	TORA: 7,820	TORA: 6,420
	TODA: 7,820	TODA: 6,420
	ASDA: 7,820	ASDA: 6,420
	LDA: 7,820	LDA: 6,420
Runway 33 Declared Distances	TORA: 8,320	TORA: 6,920
	TODA: 8,320	TODA: 6,920
	ASDA: 8,320	ASDA: 6,920
	LDA: 7,820	LDA: 6,420
Runway 15 Approach Procedures	ILS	LOC only
	RNAV	N/A
	VOR	N/A
Runway 33 Approach Procedures	ILS	Visual only
	RNAV	N/A
	VOR	N/A
Runway 15 NAVAIDs	ILS/DME, MALSR, RVR	LOC/DME, PAPI (temp), RVR

FAA Advisory Circular

Runway 33 NAVAIDs	ILS/DME, MALSF, PAPI, RVR	MALSF, PAPI, RVR
Taxiway G ADG	IV	IV (N/A between T/W H and R/W 15 end)
Taxiway E ADG	IV	IV
ATCT (hours open)	06:00 – 24:00 local	06:00 – 24:00 local
ARFF Index	D	D
Special Conditions	Air National Guard (ANG) military operations	Military operations relocated to alternate ANG Base
	Airline XYZ requires VGSI	Airline XYZ requires VGSI

Complete the following chart for each phase to determine the area that must be protected along the runway edges:

Runway	Aircraft Approach Category* A, B, C, or D	Airplane Design Group* I, II, III, or IV	RSA Width in Feet Divided by 2*
_____	_____	_____	_____
_____	_____	_____	_____
_____	_____	_____	_____
_____	_____	_____	_____
*See AC 150/5300-13 to complete the chart for a specific runway.			

Complete the following chart for each phase to determine the area that must be protected before the runway threshold:

Runway End Number	Airplane Design Group* I, II, III, or IV	Aircraft Approach Category* A, B, C, or D	Minimum Safety Area Prior to the Threshold*	Minimum Distance to Threshold Based on Required Approach Slope*	
_____	_____	_____	_____ft	_____ft	_____: 1
_____	_____	_____	_____ft	_____ft	_____: 1
_____	_____	_____	_____ft	_____ft	_____: 1
_____	_____	_____	_____ft	_____ft	_____: 1
*See AC 150/5300-13 to complete the chart for a specific runway.					

309. Navigation Aid (NAVAID) Protection. List in this section all NAVAID facilities that will be affected by the construction. Identify NAVAID facilities that will be placed out of service at any time prior to or during construction activities. Identify individuals responsible for coordinating each shutdown and when each facility will be out of service. Include a reference to paragraph 306 above for FAA ATO NAVAID shutdown, restart, and flight inspection coordination. Outline in detail procedures to protect each NAVAID facility remaining in service from interference by construction activities. Include a reference to paragraph 314 for the issuance of NOTAMs as required. Include a reference to paragraph 316 for the protection of underground cables and piping serving NAVAIDs. If temporary visual aids are proposed to replace or supplement existing facilities, include a reference to paragraph 319. Attach drawings to graphically indicate the affected NAVAIDS and the corresponding critical areas.

310. Contractor Access. This will necessarily be the most extensive section of the CSPP. Provide

sufficient detail so that a contractor not experienced in working on airports will understand the unique restrictions such work will require. Due to this extent, it should be broken down into subsections as described below:

a. Location of Stockpiled Construction Materials. Describe in this section specific locations for stockpiling material. Note any height restrictions on stockpiles. Include a reference to paragraph 321 for hazard marking and lighting devices used to identify stockpiles. Include a reference to paragraph 311 for provisions to prevent stockpile material from becoming wildlife attractants. Include a reference to paragraph 312 for provisions to prevent stockpile material from becoming FOD. Attach drawings to graphically indicate the stockpile locations.

b. Vehicle and Pedestrian Operations. While there are many items to be addressed in this major subsection of the CSPP, all are concerned with one main issue: keeping people and vehicles from areas of the airport where they don't belong. This includes preventing unauthorized entry to the AOA and preventing the improper movement of pedestrians or vehicles on the airport. In this section, focus on mechanisms to prevent construction vehicles and workers traveling to and from the worksite from unauthorized entry into movement areas. Specify locations of parking for both employee vehicles and construction equipment, and routes for access and haul roads. In most cases, this will best be accomplished by attaching a drawing. Quote from AC 150/5210-5 specific requirements for contractor vehicles rather than referring to the AC as a whole, and include special requirements for identifying Hazardous Material (HAZMAT) vehicles. Quote from, rather than incorporate by reference, AC 150/5210-20 as appropriate to address the airport's rules for ground vehicle operations, including its training program. Discuss the airport's recordkeeping system listing authorized vehicle operators.

c. Two-Way Radio Communications. Include a special section to identify all individuals who are required to maintain communications with Air Traffic (AT) at airports with active towers, or monitor Common Traffic Advisory Frequencies (CTAF) at airports without or with closed ATCT. Include training requirements for all individuals required to communicate with AT. Individuals required to monitor AT frequencies should also be identified. If construction employees are also required to communicate by radio with Airport Operations, this procedure should be described in detail. Usage of vehicle mounted radios and/or portable radios should be addressed. Communication procedures for the event of disabled radio communication (that is, light signals, telephone numbers, others) must be included. All radio frequencies should by identified (Tower, Ground Control, CTAF, UNICOM, ATIS, and so on).

d. Airport Security. Address security as it applies to vehicle and pedestrian operations. Discuss TSA requirements, security badging requirements, perimeter fence integrity, gate security, and other needs. Attach drawings to graphically indicate secured and/or Security Identification Display Areas (SIDA), perimeter fencing, and available access points.

311. Wildlife Management. Discuss in this section wildlife management procedures. Describe the maintenance of existing wildlife mitigation devices, such as perimeter fences, and procedures to limit wildlife attractants. Include procedures to notify Airport Operations of wildlife encounters. Include a reference to paragraph 310 for security (wildlife) fence integrity maintenance as required.

312. Foreign Object Debris (FOD) Management. In this section, discuss methods to control and monitor FOD: worksite housekeeping, ground vehicle tire inspections, runway sweeps, and so on. Include a reference to paragraph 315 for inspection requirements as required.

313. Hazardous Materials (HAZMAT) Management. Describe in this section HAZMAT management procedures: fuel deliveries, spill recovery procedures, Material Safety Data Sheet (MSDS) availability, and other considerations. Any specific airport HAZMAT restrictions should also be

FAA Advisory Circular

identified. Include a reference to paragraph 310 for HAZMAT vehicle identification requirements. Quote from, rather than incorporate by reference, AC 150/5320-15.

314. Notification of Construction Activities. List in this section the names and telephone numbers of points of contact for all parties affected by the construction project. We recommend a single list that includes all telephone numbers required under this section. Include emergency notification procedures for all representatives of all parties potentially impacted by the construction. Identify individual representatives – and at least one alternate – for each party. List both on-duty and off-duty contact information for each individual, including individuals responsible for emergency maintenance of airport construction hazard lighting and barricades. Describe procedures to coordinate immediate response to events that might adversely affect the operational safety of the airport (such as interrupted NAVAID service). Explain requirements for and the procedures for the issuance of Notices to Airmen (NOTAMs), notification to FAA required by 14 CFR Part 77 and Part 157 and in the event of affected NAVAIDs. For NOTAMs, identify an individual, and at least one alternate, responsible for issuing and cancelling each specific type of Notice to Airmen (NOTAM) required. Detail notification methods for police, fire
fighting, and medical emergencies. This may include 911, but should also include direct phone numbers of local police departments and nearby hospitals. The local Poison Control number should be listed. Procedures regarding notification of Airport Operations and/or the ARFF Department of such emergencies should be identified, as applicable. If airport radio communications are identified as a means of emergency notification, include a reference to paragraph 310. Differentiate between emergency and nonemergency notification of ARFF personnel, the latter including activities that affect ARFF water supplies and access roads. Identify the primary ARFF contact person and at least one alternate. If notification is to be made through Airport Operations, then detail this procedure. Include a method of confirmation from the ARFF department.

315. Inspection Requirements. Describe in this section inspection requirements to ensure airfield safety compliance. Include a requirement for routine inspections by the resident engineer (RE) and the construction contractors. If the engineering consultants and/or contractors have a Safety Officer who will conduct such inspections, identify this individual. Describe procedures for special inspections, such as those required to reopen areas for aircraft operations. Part 139 requires daily airfield inspections at certificated airports, but these may need to be more frequent when construction is in progress. Discuss the role of such inspections on areas under construction. Include a requirement to immediately remedy any deficiencies, whether caused by negligence, oversight, or project scope change.

316. Underground Utilities. Explain how existing underground utilities will be located and protected. Identify each utility owner and include contact information for each company/agency in the master list. Address emergency response procedures for damaged or disrupted utilities. Include a reference to paragraph 314 above for notification of utility owners of accidental utility disruption as required.

317. Penalties. Describe in this section specific penalties imposed for noncompliance with airport rules and regulations, including the CSPP: SIDA violations, Vehicle/Pedestrian Deviations (VPD), and others.

318. Special Conditions. Identify any special conditions that may trigger specific safety mitigation actions outlined in this CSPP: low visibility operations, snow removal, aircraft in distress, aircraft accident, security breach, VPD, and other activities requiring construction suspension/resumption. Include a reference to paragraph 310 above for compliance with airport safety and security measures and for radio communications as required. Include a reference to paragraph 319 below for emergency notification of all involved parties, including police/security, ARFF, and medical services.

319. Runway and Taxiway Visual Aids. Include marking, lighting, signs, and visual NAVAIDS.

Detail temporary runway and taxiway marking, lighting, signs, and visual NAVAIDs required for the construction. Discuss existing marking, lighting, signs, and visual NAVAIDs that are temporarily, altered, obliterated, or shut down. Consider non-federal facilities and address requirements for reimbursable agreements necessary for alteration of FAA facilities and for necessary flight checks. Identify temporary TORA signs or runway distance remaining signs if appropriate. Identify required temporary visual NAVAIDs such as REIL or PAPI. Quote from, rather than incorporate by reference, AC 150/5340-1, Standards for Airport Markings, AC 150/5340-18, Standards for Airport Sign Systems, and AC 150/5340-30, as required. Attach drawings to graphically indicate proposed marking, lighting, signs, and visual NAVAIDs.

320. Marking and Signs for Access Routes. Detail plans for marking and signs for vehicle access routes. To the extent possible, signs should be in conformance with the Federal Highway Administration Manual on Uniform Traffic Control Devices (MUTCD) and/or State highway specifications, not hand lettered. Detail any modifications to the guidance in the MUTCD necessary to meet frangibility/height requirements.

321. Hazard Marking and Lighting. Specify all marking and lighting equipment, including when and where each type of device is to be used. Specify maximum gaps between barricades and the maximum spacing of hazard lighting. Identify one individual and at least one alternate responsible for maintenance of hazard marking and lighting equipment in the master telephone list. Include a reference to paragraph 314 above. Attach drawings to graphically indicate the placement of hazard marking and lighting equipment.

322. Protection of Runway and Taxiway Safety Areas. This section should focus exclusively on procedures for protecting all safety areas, including those altered by the construction: methods of demarcation, limit of access, movement within safety areas, stockpiling and trenching restrictions, and so on. Reference AC 150/5300-13: Airport Design as required. Include a reference to paragraph 310 above for procedures regarding vehicle and personnel movement within safety areas. Include a reference to paragraph 310 above for material stockpile restrictions as required. Detail requirements for trenching, excavations, and backfill. Include a reference to paragraph 321 for hazard marking and lighting devices used to identify open excavations as required. If runway and taxiway closures are proposed to protect safety areas, or if temporary displaced thresholds and/or revised declared distances are used to provide adequate Runway Safety Area, include a reference to paragraphs 314 and 319 above. Detail procedures for protecting the runway OFZ, runway OFA, taxiway OFA and runway approach surfaces including those altered by the construction: methods of demarcation, limit of cranes, storage of equipment, and so on. Quote from, rather than incorporate by reference, AC 150/5300-13: Airport Design as required. Include a reference to paragraph 323 for height (i.e. crane) restrictions as required. One way to address the height of equipment that will move during the project is to establish a three-dimensional “box” within which equipment will be confined that can be studied as a single object. Attach drawings to graphically indicate the safety area, OFZ, and OFA boundaries.

323. Other Limitations on Construction. This section should describe what limitations must be applied to each area of work and when each limitation will be applied: limitations due to airport operations, height (i.e. crane) restrictions, areas which cannot be worked at simultaneously, day/night work restrictions, winter construction, and other limitations. Include a reference to paragraph 307 above for project phasing requirements based on construction limitations as required.

Appendix 1. Related Reading Material

Obtain the latest version of the following free publications from the FAA on its Web site at http://www.faa.gov/airports/.

AC	Title and Description
AC 150/5200-28	Notices to Airmen (NOTAMs) for Airport Operators
	Guidance for using the NOTAM System in airport reporting.
AC 150/5200-30	Airport Winter Safety and Operations
	Guidance for airport owners/operators on the development of an acceptable airport snow and ice control program and on appropriate field condition reporting procedures.
AC 150/5200-33	Hazardous Wildlife Attractants On or Near Airports
	Guidance on locating certain land uses that might attract hazardous wildlife to public-use airports.
AC 150/5210-5	Painting, Marking, and Lighting of Vehicles Used on an Airport.
	Guidance, specifications, and standards for painting, marking, and lighting vehicles operating in the airport air operations areas.
AC 150/5210-20	Ground Vehicle Operations on Airports
	Guidance to airport operators on developing ground vehicle operation training programs.
AC 150/5300-13	Airport Design
	FAA standards and recommendations for airport design, establishes approach visibility minimums as an airport design parameter, and contains the Object Free area and the obstacle free-zone criteria.
AC 150/5310-24	Airport Foreign Object Debris Management
	Guidance for developing and managing an airport foreign object debris (FOD) program
AC 150/5220-4	Water Supply Systems for Aircraft Fire and Rescue Protection.
	Guidance on selecting a water source and meeting standards for a distribution system to support aircraft rescue and fire fighting service operations on airports.
AC 150/5320-15	Management of Airport Industrial Waste
	Basic information on the characteristics, management, and regulations of industrial wastes generated at airports. Guidance for developing a Storm Water Pollution Prevention Plan (SWPPP) that applies best management practices to eliminate, prevent, or reduce pollutants in storm water runoff with particular airport industrial activities.
AC 150/5340-1	Standards for Airport Markings
	FAA standards for markings used on airport runways, taxiways, and aprons.
AC 150/5340-18	Standards for Airport Sign Systems
	FAA standards for the siting and installation of signs on airport runways and taxiways.
AC 150/5345-28	Precision Approach Path Indicator (PAPI) Systems
	FAA standards for PAPI systems, which provide pilots with visual glide slope guidance during approach for landing.

AC	Title and Description
AC 150/5340-30	Design and Installation Details for Airport Visual Aids
	Guidance and recommendations on the installation of airport visual aids.
AC 150/5345-39	Specification for L-853, Runway and Taxiway Retroreflective Markers
AC 150/5345-44	Specification for Runway and Taxiway Signs
	FAA specifications for unlighted and lighted signs for taxiways and runways.
AC 150/5345-53	Airport Lighting Certification Program
	Details on the Airport Lighting Equipment Certification Program (ALECP).
AC 150/5345-50	Specification for Portable Runway and Taxiway Lights
	FAA standards for portable runway and taxiway lights and runway end identifier lights for temporary use to permit continued aircraft operations while all or part of a runway lighting system is inoperative.
AC 150/5345-55	Specification for L-893, Lighted Visual Aid to Indicate Temporary Runway Closure
AC 150/5370-10	Standards for Specifying Construction of Airports
	Standards for construction of airports, including earthwork, drainage, paving, turfing, lighting, and incidental construction.
FAA Order 5200.11	FAA Airports (ARP) Safety Management System (SMS)
	Basics for implementing SMS within ARP. Includes roles and responsibilities of ARP management and staff as well as other FAA lines of business that contribute to the ARP SMS.
FAA Certalert 98-05	Grasses Attractive to Hazardous Wildlife
	Guidance on grass management and seed selection.
FAA Form 7460-1	Notice of Proposed Construction or Alteration
FAA Form 7480-1	Notice of Landing Area Proposal

Obtain the latest version of the following free publications from the Electronic Code of Federal Regulations at http://ecfr.gpoaccess.gov/.

Title 14 CFR Part 139	Certification of Airports
Title 49 CFR Part 1542	Airport Security

Obtain the latest version of the Manual on Uniform Traffic Control Devices from the Federal Highway Administration at http://mutcd.fhwa.dot.gov/.

Appendix 2. Definition of Terms

Term	Definition
7460-1	Notice Of Proposed Construction Or Alteration. For on-airport projects, the form submitted to the FAA regional or airports division office as formal written notification of any kind of construction or alteration of objects that affect navigable airspace, as defined in 14 CFR Part 77, safe, efficient use, and preservation of the navigable airspace. (See guidance available on the FAA web site at oeaaa.faa.gov.) The form may be downloaded at http://www.faa.gov/airports/resources/forms/, or filed electronically at: https://oeaaa.faa.gov.
7480-1	Notice Of Landing Area Proposal. Form submitted to the FAA Airports Regional Division Office or Airports District Office as formal written notification whenever a project without an airport layout plan on file with the FAA involves the construction of a new airport; the construction, realigning, altering, activating, or abandoning of a runway, landing strip, or associated taxiway; or the deactivation or abandoning of an entire airport The form may be downloaded at http://www.faa.gov/airports/resources/forms/.
AC	Advisory Circular
ACRC	Aircraft Reference Code
ACSI	Airport Certification Safety Inspector
ADG	Airplane Design Group
AIP	Airport Improvement Program
ALECP	Airport Lighting Equipment Certification Program
ANG	Air National Guard
AOA	Air Operations Area. Any area of the airport used or intended to be used for the landing, takeoff, or surface maneuvering of aircraft. An air operations area includes such paved or unpaved areas that are used or intended to be used for the unobstructed movement of aircraft in addition to its associated runways, taxiways, or aprons.
ARFF	Aircraft Rescue and Fire Fighting
ARP	FAA Office of Airports
ASDA	Accelerate-Stop Distance Available
ATCT	Airport Traffic Control Tower
ATIS	Automatic Terminal Information Service
ATO	Air Traffic Organization
Certificated Airport	An airport that has been issued an Airport Operating Certificate by the FAA under the authority of 14 CFR Part 139, Certification of Airports.
CFR	Code of Federal Regulations
Construction	The presence and movement of construction-related personnel, equipment, and materials in any location that could infringe upon the movement of aircraft.
CSPP	Construction Safety And Phasing Plan. The overall plan for safety and phasing of a construction project developed by the airport operator, or developed by the airport operator's consultant and approved by the airport operator. It is included in the invitation for bids and becomes part of the project specifications.

Term	Definition
CTAF	Common Traffic Advisory Frequency
Displaced Threshold	A threshold that is located at a point on the runway other than the designated beginning of the runway. The portion of pavement behind a displaced threshold is available for takeoffs in either direction or landing from the opposite direction.
DOT	Department of Transportation
EPA	Environmental Protection Agency
FOD	Foreign Object Debris
HAZMAT	Hazardous Materials
IFR	Instrument Flight Rules
ILS	Instrument Landing System
LDA	Landing Distance Available
LOC	Localizer antenna array
Movement Area	The runways, taxiways, and other areas of an airport that are used for taxiing or hover taxiing, air taxiing, takeoff, and landing of aircraft, exclusive of loading aprons and aircraft parking areas (reference 14 CFR Part 139).
MSDS	Material Safety Data Sheet
MUTCD	Manual on Uniform Traffic Control Devices
NAVAID	Navigation Aid
NAVAID Critical Area	An area of defined shape and size associated with a NAVAID that must remain clear and graded to avoid interference with the electronic signal.
Non-Movement Area	The area inside the airport security fence exclusive of the Movement Area. It is important to note that the non-movement area includes pavement traversed by aircraft.
NOTAM	Notices to Airmen
Obstruction	Any object/obstacle exceeding the obstruction standards specified by 14 CFR Part 77, subpart C.
OE / AAA	Obstruction Evaluation / Airport Airspace Analysis
OFA	Object Free Area. An area on the ground centered on the runway, taxiway, or taxi lane centerline provided to enhance safety of aircraft operations by having the area free of objects except for those objects that need to be located in the OFA for air navigation or aircraft ground maneuvering purposes. (See AC 150/5300-13, for additional guidance on OFA standards and wingtip clearance criteria.)
OFZ	Obstacle Free Zone. The airspace below 150 ft (45 m) above the established airport elevation and along the runway and extended runway centerline that is required to be clear of all objects, except for frangible visual NAVAIDs that need to be located in the OFZ because of their function, in order to provide clearance protection for aircraft landing or taking off from the runway and for missed approaches. The OFZ is subdivided as follows: Runway OFZ, Inner Approach OFZ, Inner Transitional OFZ, and Precision OFZ. Refer to AC 150/5300-13 for guidance on OFZ.
OSHA	Occupational Safety and Health Administration
P&R	Planning and Requirements Group

Term	Definition
PAPI	Precision Approach Path Indicators
PFC	Passenger Facility Charge
PLASI	Pulse Light Approach Slope Indicators
Project Proposal Summary	A clear and concise description of the proposed project or change that is the object of Safety Risk Management.
RE	Resident Engineer
REIL	Runway End Identifier Lights
RNAV	Area Navigation
ROFA	Runway Object Free Area
RSA	Runway Safety Area. A defined surface surrounding the runway prepared or suitable for reducing the risk of damage to airplanes in the event of an undershoot, overshoot, or excursion from the runway, in accordance with AC 150/5300-13.
SIDA	Security Identification Display Area
SMS	Safety Management System
SPCD	Safety Plan Compliance Document. Details developed and submitted by a contractor to the airport operator for approval providing details on how the performance of a construction project will comply with the CSPP.
SRM	Safety Risk Management
Taxiway Safety Area	A defined surface alongside the taxiway prepared or suitable for reducing the risk of damage to an airplane unintentionally departing the taxiway, in accordance with AC 150/5300-13.
TDG	Taxiway Design Group
Temporary	Any condition that is not intended to be permanent.
Temporary Runway End	The beginning of that portion of the runway available for landing and taking off in one direction, and for landing in the other direction. Note the difference from a displaced threshold.
Threshold	The beginning of that portion of the runway available for landing. In some instances, the landing threshold may be displaced.
TODA	Takeoff Distance Available
TOFA	Taxiway Object Free Area
TORA	Takeoff Run Available. The length of the runway less any length of runway unavailable and/or unsuitable for takeoff run computations. See AC 150/5300-13 for guidance on declared distances.
TSA	Taxiway Safety Area Transportation Security Administration
UNICOM	A radio communications system of a type used at small airports.
VASI	Visual Approach Slope Indicators

Term	Definition
VGSI	Visual Glide Slope Indicator. A device that provides a visual glide slope indicator to landing pilots. These systems include precision approach path indicators (PAPI), visual approach slope indicators (VASI), and pulse light approach slope indicators (PLASI).
VFR	Visual Flight Rules
VOR	VHF Omnidirectional Radio Range
VPD	Vehicle / Pedestrian Deviation

Appendix 3. Safety and Phasing Plan Checklist

This appendix is keyed to Section 2. Plan Requirements. In the electronic version of this AC, clicking on the paragraph designation in the Reference column will access the applicable paragraph. There may be instances where the CSPP requires provisions that are not covered by the list in this appendix.

This checklist is intended as an aid, not as a required submittal.

Coordination	Reference	Addressed			Remarks
General Considerations					
Requirements for predesign, prebid, and preconstruction conferences to introduce the subject of airport operational safety during construction are specified.	205	☐ Yes	☐ No	☐ NA	
Operational safety is a standing agenda item for construction progress meetings.	205	☐ Yes	☐ No	☐ NA	
Scheduling of the construction phases is properly addressed.	206	☐ Yes	☐ No	☐ NA	
Areas and Operations Affected by Construction Activity					
Drawings showing affected areas are included.	207.a	☐ Yes	☐ No	☐ NA	
Closed or partially closed runways, taxiways, and aprons are depicted on drawings.	207.a(1)	☐ Yes	☐ No	☐ NA	
Access routes used by ARFF vehicles affected by the project are addressed.	207.a(2)	☐ Yes	☐ No	☐ NA	
Access routes used by airport and airline support vehicles affected by the project are addressed.	207.a(3)	☐ Yes	☐ No	☐ NA	
Underground utilities, including water supplies for fire fighting and drainage.	207.a(4)	☐ Yes	☐ No	☐ NA	
Approach/departure surfaces affected by heights of temporary objects are addressed.	207.a(5)	☐ Yes	☐ No	☐ NA	
Construction areas, storage areas, and access routes near runways, taxiways, aprons, or helipads are properly depicted on drawings.	207.a	☐ Yes	☐ No	☐ NA	
Temporary changes to taxi operations are addressed.	207.b(1)	☐ Yes	☐ No	☐ NA	

Coordination	Reference	Addressed			Remarks
Detours for ARFF and other airport vehicles are identified.	207.b(2)	☐ Yes	☐ No	☐ NA	
Maintenance of essential utilities and underground infrastructure is addressed.	207.b(3)	☐ Yes	☐ No	☐ NA	
Temporary changes to air traffic control procedures are addressed.	207.b(4)	☐ Yes	☐ No	☐ NA	
NAVAIDS					
Critical areas for NAVAIDs are depicted on drawings.	208	☐ Yes	☐ No	☐ NA	
Effects of construction activity on the performance of NAVAIDS, including unanticipated power outages, are addressed.	208	☐ Yes	☐ No	☐ NA	
Protection of NAVAID facilities is addressed.	208	☐ Yes	☐ No	☐ NA	
The required distance and direction from each NAVAID to any construction activity is depicted on drawings.	208	☐ Yes	☐ No	☐ NA	
Procedures for coordination with FAA ATO/Technical Operations, including identification of points of contact, are included.	208, 213.a, 213.e(3)(a), 218.a	☐ Yes	☐ No	☐ NA	
Contractor Access					
The CSPP addresses areas to which contractor will have access and how the areas will be accessed.	209	☐ Yes	☐ No	☐ NA	
The application of 49 CFR Part 1542 Airport Security, where appropriate, is addressed.	209	☐ Yes	☐ No	☐ NA	
The location of stockpiled construction materials is depicted on drawings.	209.a	☐ Yes	☐ No	☐ NA	
The requirement for stockpiles in the ROFA to be approved by FAA is included.	209.a	☐ Yes	☐ No	☐ NA	
Requirements for proper stockpiling of materials are included.	209.a	☐ Yes	☐ No	☐ NA	

Coordination	Reference	Addressed			Remarks
Construction site parking is addressed.	209.b(1)	☐ Yes	☐ No	☐ NA	
Construction equipment parking is addressed.	209.b(2)	☐ Yes	☐ No	☐ NA	
Access and haul roads are addressed.	209.b(3)	☐ Yes	☐ No	☐ NA	
A requirement for marking and lighting of vehicles to comply with AC 150/5210-5, Painting, Marking and Lighting of Vehicles Used on an Airport, is included.	209.b(4)	☐ Yes	☐ No	☐ NA	
Proper vehicle operations, including requirements for escorts, are described.	209.b(5), 209.b(6)	☐ Yes	☐ No	☐ NA	
Training requirements for vehicle drivers are addressed.	209.b(7)	☐ Yes	☐ No	☐ NA	
Two-way radio communications procedures are described.	209.b(9)	☐ Yes	☐ No	☐ NA	
Maintenance of the secured area of the airport is addressed.	209.b(10)	☐ Yes	☐ No	☐ NA	
Wildlife Management					
The airport operator's wildlife management procedures are addressed.	210	☐ Yes	☐ No	☐ NA	
Foreign Object Debris Management					
The airport operator's FOD management procedures are addressed.	211	☐ Yes	☐ No	☐ NA	
Hazardous Materials Management					
The airport operator's hazardous materials management procedures are addressed.	212	☐ Yes	☐ No	☐ NA	
Notification of Construction Activities					
Procedures for the immediate notification of airport user and local FAA of any conditions adversely affecting the operational safety of the airport are detailed.	213	☐ Yes	☐ No	☐ NA	

Coordination	Reference	Addressed			Remarks
Maintenance of a list by the airport operator of the responsible representatives/points of contact for all involved parties and procedures for contacting them 24 hours a day, seven days a week is specified.	213.a	☐ Yes	☐ No	☐ NA	
A list of local ATO/Technical Operations personnel is included.	213.a	☐ Yes	☐ No	☐ NA	
A list of ATCT managers on duty is included.	213.a	☐ Yes	☐ No	☐ NA	
A list of authorized representatives to the OCC is included.	213.b	☐ Yes	☐ No	☐ NA	
Procedures for coordinating, issuing, maintaining and cancelling by the airport operator of NOTAMS about airport conditions resulting from construction are included.	208, 213.b, 218.b(4)(i)	☐ Yes	☐ No	☐ NA	
Provision of information on closed or hazardous conditions on airport movement areas by the airport operator to the OCC is specified.	213.b	☐ Yes	☐ No	☐ NA	
Emergency notification procedures for medical, fire fighting, and police response are addressed.	213.c	☐ Yes	☐ No	☐ NA	
Coordination with ARFF personnel for non-emergency issues is addressed.	213.d	☐ Yes	☐ No	☐ NA	
Notification to the FAA under 14 CFR parts 77 and 157 is addressed.	213.e	☐ Yes	☐ No	☐ NA	
Reimbursable agreements for flight checks and/or design and construction for FAA owned NAVAIDs are addressed.	213.e(3)(b)	☐ Yes	☐ No	☐ NA	
Inspection Requirements					
Daily inspections by both the airport operator and contractor are specified.	214.a	☐ Yes	☐ No	☐ NA	
Final inspections at certificated airports are specified when required.	214.b	☐ Yes	☐ No	☐ NA	
Underground Utilities					
Procedures for protecting existing underground facilities in excavation areas are described.	215	☐ Yes	☐ No	☐ NA	

Coordination	Reference	Addressed			Remarks
Penalties					
Penalty provisions for noncompliance with airport rules and regulations and the safety plans are detailed.	216	☐ Yes	☐ No	☐ NA	
Special Conditions					
Any special conditions that affect the operation of the airport or require the activation of any special procedures are addressed.	217	☐ Yes	☐ No	☐ NA	
Runway and Taxiway Visual Aids - Marking, Lighting, Signs, and Visual NAVAIDs					
The proper securing of temporary airport markings, lighting, signs, and visual NAVAIDs is addressed.	218.a	☐ Yes	☐ No	☐ NA	
Frangibility of airport markings, lighting, signs, and visual NAVAIDs is specified.	218.a, 218.c, 219, 220.b(4)	☐ Yes	☐ No	☐ NA	
The requirement for markings to be in compliance with AC 150/5340-1, Standards for Airport Markings is specified.	218.b	☐ Yes	☐ No	☐ NA	
The requirement for lighting to conform to AC 150/5340-30, Design and Installation Details for Airport Visual Aids, AC 150/5345-50, Specification for Portable Runway and Taxiway Lights , and AC 150/5345-53 Airport Lighting Certification Program, is specified.	218.b(1)(f)	☐ Yes	☐ No	☐ NA	
The use of a lighted X is specified where appropriate.	218.b(1)(b), 218.b(3)	☐ Yes	☐ No	☐ NA	
The requirement for signs to conform to AC 150/5345-44, Specification for Runway and Taxiway Signs, AC 50/5340-18, Standards for Airport Sign Systems, and AC 150/5345-53, Airport Lighting Certification Program, is specified.	218.c	☐ Yes	☐ No	☐ NA	
Marking and Signs For Access Routes					
The CSPP specifies that pavement markings and signs intended for construction personnel should conform to AC 150/5340-18 and, to the extent practicable, with the MUTCD and/or State highway specifications.	219	☐ Yes	☐ No	☐ NA	
Hazard Marking and Lighting					
Prominent, comprehensible warning indicators for any area affected by construction that is normally accessible to aircraft, personnel, or vehicles are specified.	220.a	☐ Yes	☐ No	☐ NA	

Coordination	Reference	Addressed			Remarks
Hazard marking and lighting are specified to identify open manholes, small areas under repair, stockpiled material, and waste areas.	220.a	☐ Yes	☐ No	☐ NA	
The CSPP considers less obvious construction-related hazards.	220.a	☐ Yes	☐ No	☐ NA	
Equipment that poses the least danger to aircraft but is sturdy enough to remain in place when subjected to typical winds, prop wash and jet blast is specified.	220.b(1)	☐ Yes	☐ No	☐ NA	
The spacing of barricades is specified such that a breach is physically prevented barring a deliberate act.	220.b(1)	☐ Yes	☐ No	☐ NA	
Red lights meeting the luminance requirements of the State Highway Department are specified.	220.b(2)	☐ Yes	☐ No	☐ NA	
Barricades, temporary markers, and other objects placed and left in areas adjacent to any open runway, taxiway, taxi lane, or apron are specified to be as low as possible to the ground, and no more than 18 in high.	220.b(4)	☐ Yes	☐ No	☐ NA	
Barricades marked with diagonal, alternating orange and white stripes are specified to indicate construction locations in which no part of an aircraft may enter.	220.b(4)	☐ Yes	☐ No	☐ NA	
Highly reflective barriers with lights are specified to barricade taxiways leading to closed runways.	220.b(5)	☐ Yes	☐ No	☐ NA	
Markings for temporary closures are specified.	220.b(5)	☐ Yes	☐ No	☐ NA	
The provision of a contractor's representative on call 24 hours a day for emergency maintenance of airport hazard lighting and barricades is specified.	220.b(7)	☐ Yes	☐ No	☐ NA	
Protection of Runway and Taxiway Safety Areas					
The CSPP clearly states that no construction may occur within a safety area while the associated runway or taxiway is open for aircraft operations.	221.a(1), 221.c(1)	☐ Yes	☐ No	☐ NA	
The CSPP specifies that the airport operator coordinates the adjustment of RSA or TSA dimensions with the ATCT and the appropriate FAA Airports Regional or District Office and issues a local NOTAM.	221.a(2), 221.c(2)	☐ Yes	☐ No	☐ NA	

FAA Advisory Circular

Coordination	Reference	Addressed			Remarks
Procedures for ensuring adequate distance for protection from blasting operations, if required by operational considerations, are detailed.	221.c(3)	☐ Yes	☐ No	☐ NA	
The CSPP specifies that open trenches or excavations are not permitted within a safety area while the associated runway or taxiway is open.	221.a(4)	☐ Yes	☐ No	☐ NA	
Appropriate covering of excavations in the RSA or TSA that cannot be backfilled before the associated runway or taxiway is open is detailed.	221.a(4)	☐ Yes	☐ No	☐ NA	
The CSPP includes provisions for prominent marking of open trenches and excavations at the construction site.	221.a(4)	☐ Yes	☐ No	☐ NA	
Grading and soil erosion control to maintain RSA/TSA standards are addressed.	221.c(5)	☐ Yes	☐ No	☐ NA	
The CSPP specifies that equipment is to be removed from the ROFA when not in use.	221.b	☐ Yes	☐ No	☐ NA	
The CSPP clearly states that no construction may occur within a taxiway safety area while the taxiway is open for aircraft operations.	221.c	☐ Yes	☐ No	☐ NA	
Appropriate details are specified for any construction work to be accomplished in a taxiway object free area.	221.d	☐ Yes	☐ No	☐ NA	
Measures to ensure that personnel, material, and/or equipment do not penetrate the OFZ or threshold siting surfaces while the runway is open for aircraft operations are included.	221.e	☐ Yes	☐ No	☐ NA	
Provisions for protection of runway approach/departure areas and clearways are included.	221.f	☐ Yes	☐ No	☐ NA	
Other Limitations on Construction					
The CSPP prohibits the use of open flame welding or torches unless adequate fire safety precautions are provided and the airport operator has approved their use.	222.a(2)	☐ Yes	☐ No	☐ NA	
The CSPP prohibits the use of flare pots within the AOA at any time.	222.a(4)	☐ Yes	☐ No	☐ NA	
The CSPP prohibits the use of electrical blasting caps on or within 1,000 ft (300 m) of the airport property.	222.a(3)	☐ Yes	☐ No	☐ NA	

Appendix 4. Construction Project Daily Safety Inspection Checklist

The situations identified below are potentially hazardous conditions that may occur during airport construction projects. Safety area encroachments, unauthorized and improper ground vehicle operations, and unmarked or uncovered holes and trenches near aircraft operating surfaces pose the most prevalent threats to airport operational safety during airport construction projects. The list below is one tool that the airport operator or contractor may use to aid in identifying and correcting potentially hazardous conditions. It should be customized as appropriate for each project.

Potentially Hazardous Conditions

Item	Action Required	or	None
Excavation adjacent to runways, taxiways, and aprons improperly backfilled.			☐
Mounds of earth, construction materials, temporary structures, and other obstacles near any open runway, taxiway, or taxi lane; in the related Object Free area and aircraft approach or departure areas/zones; or obstructing any sign or marking.			☐
Runway resurfacing projects resulting in lips exceeding 3 in (7.6 cm) from pavement edges and ends.			☐
Heavy equipment (stationary or mobile) operating or idle near AOA, in runway approaches and departures areas, or in OFZ.			☐
Equipment or material near NAVAIDs that may degrade or impair radiated signals and/or the monitoring of navigation and visual aids. Unauthorized or improper vehicle operations in localizer or glide slope critical areas, resulting in electronic interference and/or facility shutdown.			☐
Tall and especially relatively low visibility units (that is, equipment with slim profiles) — cranes, drills, and similar objects — located in critical areas, such as OFZ and approach zones.			☐
Improperly positioned or malfunctioning lights or unlighted airport hazards, such as holes or excavations, on any apron, open taxiway, or open taxi lane or in a related safety, approach, or departure area.			☐
Obstacles, loose pavement, trash, and other debris on or near AOA. Construction debris (gravel, sand, mud, paving materials) on airport pavements may result in aircraft propeller, turbine engine, or tire damage. Also, loose materials may blow about, potentially causing personal injury or equipment damage.			☐

Item	Action Required	or	None
Inappropriate or poorly maintained fencing during construction intended to deter human and animal intrusions into the AOA. Fencing and other markings that are inadequate to separate construction areas from open AOA create aviation hazards.			☐
Improper or inadequate marking or lighting of runways (especially thresholds that have been displaced or runways that have been closed) and taxiways that could cause pilot confusion and provide a potential for a runway incursion. Inadequate or improper methods of marking, barricading, and lighting of temporarily closed portions of AOA create aviation hazards.			☐
Wildlife attractants — such as trash (food scraps not collected from construction personnel activity), grass seeds, tall grass, or standing water — on or near airports.			☐
Obliterated or faded temporary markings on active operational areas.			☐
Misleading or malfunctioning obstruction lights. Unlighted or unmarked obstructions in the approach to any open runway pose aviation hazards.			☐
Failure to issue, update, or cancel NOTAMs about airport or runway closures or other construction related airport conditions.			☐
Failure to mark and identify utilities or power cables. Damage to utilities and power cables during construction activity can result in the loss of runway / taxiway lighting; loss of navigation, visual, or approach aids; disruption of weather reporting services; and/or loss of communications.			☐
Restrictions on ARFF access from fire stations to the runway / taxiway system or airport buildings.			☐
Lack of radio communications with construction vehicles in airport movement areas.			☐
Objects, regardless of whether they are marked or flagged, or activities anywhere on or near an airport that could be distracting, confusing, or alarming to pilots during aircraft operations.			☐
Water, snow, dirt, debris, or other contaminants that temporarily obscure or derogate the visibility of runway/taxiway marking, lighting, and pavement edges. Any condition or factor that obscures or diminishes the visibility of areas under construction.			☐
Spillage from vehicles (gasoline, diesel fuel, oil) on active pavement areas, such as runways, taxiways, aprons, and airport roadways.			☐

Item	Action Required	or	None
Failure to maintain drainage system integrity during construction (for example, no temporary drainage provided when working on a drainage system).			☐
Failure to provide for proper electrical lockout and tagging procedures. At larger airports with multiple maintenance shifts/workers, construction contractors should make provisions for coordinating work on circuits.			☐
Failure to control dust. Consider limiting the amount of area from which the contractor is allowed to strip turf.			☐
Exposed wiring that creates an electrocution or fire ignition hazard. Identify and secure wiring, and place it in conduit or bury it.			☐
Site burning, which can cause possible obscuration.			☐
Construction work taking place outside of designated work areas and out of phase.			☐

Intentionally Left Blank

AGENDA ITEM NO. XI.1

Item Cover Page

CITY COUNCIL AGENDA ITEM REPORT

DATE: June 4, 2026

SUBMITTED BY: Jordan Strohmeyer, Development Services

SUBJECT: Consider, discuss, and take action on the Draft City of Lago Vista Comprehensive Plan and the Comprehensive Plan Subcommittee Recommendation.

BACKGROUND:

The City of Lago Vista has been engaged in the preparation of an updated Comprehensive Plan intended to provide long-range policy guidance related to land use, infrastructure, mobility, parks, economic development, community character, and public investment. The draft plan identifies itself as a guidance document intended to assist future decision-making and long-term planning efforts.

The planning effort has included participation from City Council, Planning and Zoning Commission members, City staff, consultants, advisory participants, and members of the public. The draft document acknowledges coordination between City staff, appointed officials, elected officials, and community stakeholders throughout the process.

The Comprehensive Plan Subcommittee has continued reviewing and refining portions of the draft document, including updates related to community visioning, future land use, implementation concepts, and supporting planning principles.

This item is being presented to provide City Council with an opportunity to review the current draft document, receive an update regarding the subcommittee's work to date, discuss the overall status of the planning effort, and provide any desired policy direction regarding the next steps in the Comprehensive Plan process.

ATTACHMENTS:
Comp_Plan_Draft 02_04_26.pdf
Exec. Summary w-amendments from 5-4-29 P&Z meeting.pdf

CITY OF LAGO VISTA COMPREHENSIVE AND PARKS MASTER PLAN

A FRAMEWORK FOR THOUGHTFUL GROWTH AND STEWARDSHIP

ACKNOWLEDGMENTS

The 2025 Lago Vista Comprehensive Plan was developed by the City of Lago Vista with technical and design support provided by Halff. The City acknowledges Halff's professional contributions during the early phases of this planning effort, including background analysis, initial framework development, and community engagement support.

As the planning process continued, City staff worked in coordination with appointed boards, elected officials, and community members to refine and shape the Plan so that it clearly reflects Lago Vista's character, values, and long-term priorities. This final document represents a collaborative effort that builds upon earlier work while incorporating direction and feedback received throughout the process.

The City extends sincere appreciation to the many residents, property owners, staff members, board and commission members, and elected officials who dedicated their time and insight to this effort. Their participation and thoughtful input were essential to creating a Plan that is both visionary and practical, and that will guide Lago Vista's growth and stewardship in the years ahead.

MAYOR AND CITY COUNCIL

Shane Saum, Mayor
Jess Hall, Council Place 1
Adam Benefield, Council Place 2
Amanda Chavarria, Council Place 3
Norma Owen, Council Place 4
Karen VanNess, Council Place 5
Paul Prince, Council Place 6

CITY OF LAGO VISTA STAFF

Charles West, City Manager
Jordan Strohmeyer
Tam Pieklik
Ernesto Rios
Victor Manzano
David Montgomery-Scott

PLANNING AND ZONING COMMISSION

Lynda Aird, Chair
Gene Harris, Vice-Chair
Enrique Lopez, Member
Ann Cleator, Member
Jeff Hewgley, Member
Dave Stewart, Member
Nelson Minyard, Member

PARKS AND RECREATION ADVISORY COMMITTEE

Andrew Gale, Chair
Carolyn Dalglish, Vice-Chair
Marlene Plua, Secretary
Steve Becker, Member
Mark Douglas, Member
Ike Coronis, Member
Dawn Knauss, Member

PLAN ADVISORY COMMITTEE

Norma Owen
John Baker
Guy Burkhart
Mandi Carter
Zach Davis
Anna Johndrow
Lauryn Luther
Louise Madigan
Dan Sellers
Eugene Uecker

PREVIOUS ELECTED/APPOINTED OFFICALS AND CITY STAFF

Paul Roberts, Council
Rob Durbin, Council
Thomas Monahan, Planning and Zoning
Don Johndrow, Planning and Zoning
Kathy Koza, Planning and Zoning
Dave Snyder, Planning and Zoning
Rachael Rich, Planning and Zoning
Frank Robbins, Planning and Zoning
Taylor Whichard, City Staff
Tracie Hlavinka, City Staff
Roy Jambor, City Staff
Sean Vance, City Staff

DRAFT 02-04-2026

CITY OF LAGO VISTA TEXAS

TABLE OF CONTENTS

PART I COMMUNITY VISION AND VALUES

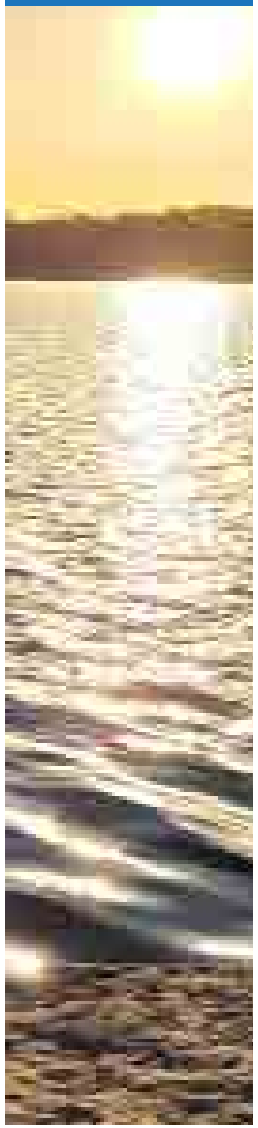

PART II FUTURE LAND USE MAP

PART III PARKS

PART IV MOBILITY, SAFETY, AND INFRASTRUCTURE

PART V FUNDING THE VISION

PART VI IMPLEMENTATION AND GOVERNANCE

PART VII SUPPORTING INFORMATION

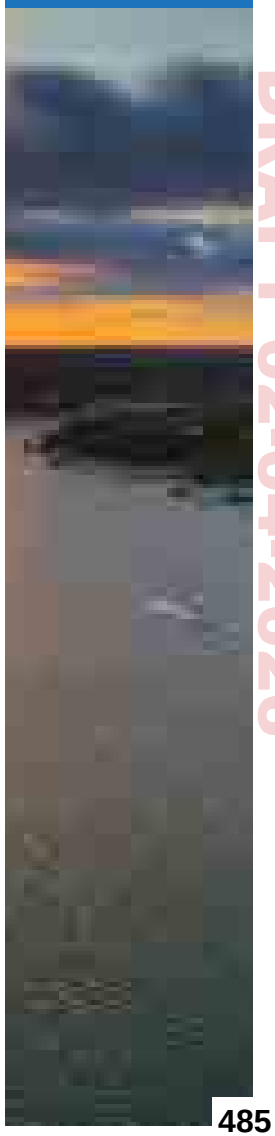

DRAFT 02-04-2026

COMMUNITY VISION AND VALUES

INTRODUCTION & PURPOSE....8
CREATING THE VISION....10
FROM VISION TO GOALS....12
COMMUNITY VALUES & PLANNING PRINCIPLES....14

DRAFT 02-04-2026

WHAT IS A COMPREHENSIVE PLAN?

A FRAMEWORK FOR THOUGHTFUL GROWTH AND STEWARDSHIP FOR THE CITY OF LAGO VISA

THE PLAN CREATES A VISION AND GOALS TO TIE TOGETHER THE CITY'S PLANS AND POLICIES.

COMMUNITY CHARACTER

Preserve Lago Vista's identity as a scenic Hill Country lakeside community with a strong sense of place, natural beauty, and close-knit neighborhoods.

MOBILITY

Provide a safe, connected, and efficient transportation system that supports residents, visitors, and emergency access.

CITY SERVICES

Deliver reliable, high-quality public services and infrastructure in a fiscally responsible manner that supports quality of life.

FUTURE LAND USE

Guide growth and development to appropriate locations using thoughtful land use patterns that respect surrounding context and capacity.

ECONOMIC DEVELOPMENT

Support a balanced local economy that provides services, employment, and revenue needed to sustain the community.

PARKS AND RECREATION

Protect and expand parks, open space, and recreational opportunities that support health, connection, and enjoyment of the natural environment.

CITY WIDE PLANS

- AIRPORT ACTION PLAN (2016)
- LAGO VISTA 2030 COMPREHENSIVE PLAN (2017)
- PARKS AND RECREATION MASTER PLAN (2010)
- THOROUGHFARE PLAN UPDATE (2021)
- TRAVIS COUNTY HAZARD MITIGATION PLAN (2023)
- WASTEWATER MASTER PLAN (2024)

WHAT IS THIS PLAN?

The Lago Vista Comprehensive Plan is the community's shared vision for the future. It reflects the voices, values, and priorities of residents, property owners, business interests, appointed boards, and elected officials, and it serves as the guiding document for shaping how Lago Vista grows and evolves over the next 10 to 20 years.

This Plan is rooted in Lago Vista's planning history and clear understanding of what makes the community distinct. Lago Vista is defined by its lakeside setting, Hill Country landscape, scenic views, and strong sense of community. Preserving these qualities while responsibly accommodating change is central to the purpose of this Plan.

The vision, supported by a set of core goals, provides the foundation for all policies and recommendations contained in this document. Together, the vision and goals establish a common framework that connects land use, transportation, infrastructure, parks, environmental stewardship, and fiscal planning. This shared framework allows City departments and decision-makers to work toward consistent outcomes rather than isolated actions.

HOW THIS PLAN WILL BE USED?

City leaders, staff, boards and commissions, residents, and the development community should look to the Lago Vista Comprehensive Plan as the primary guide for important policy and development decisions. The City will use this Plan to:

- Provide a consistent framework and shared direction for City planning efforts
- Guide policy and regulatory decisions, including future zoning updates
- Inform infrastructure planning and capital investment priorities
- Support coordinated budgeting and fiscal decision-making
- Evaluate development proposals for consistency with community goals
- Measure progress toward achieving the community's long-term vision

This Plan does not grant zoning or development rights and does not replace adopted ordinances, budgets, or capital improvement programs. Instead, it establishes clear policy direction to guide those tools and ensure that decisions are made transparently, consistently, and in alignment with community values.

HOW THIS PLAN CONNECTS OTHERS

The Lago Vista Comprehensive Plan serves as the City's primary policy guide and umbrella document. More detailed plans and studies advance the vision of this Plan through focused strategies, technical analysis, and specific and measureable actions.

Citywide and topic-specific plans such as transportation, utilities, parks, hazard mitigation, and facility plans are referenced throughout this document where relevant. These plans provide important detail and direction but do not change the fundamental vision or goals of the Comprehensive Plan. Instead, they help keep the Plan current, actionable, and responsive to changing conditions.

Smaller-area or issue-specific plans may also be adopted in the future to provide additional guidance for particular locations or needs. These plans should align with the vision and place framework established in this document and support its long-term direction.

DRAFT 02-04-2026

DRAFT 02-04-2026

THE COMMUNITY VISION FOR LAGO VISTA

The Community Vision reflects what residents, community leaders, and stakeholders value most about Lago Vista and what they want to protect as the City plans for the future. It is grounded in public input, local conditions, and an understanding of the City's environment, infrastructure capacity, and fiscal realities. The Vision establishes a shared direction for future decision-making and serves as the foundation for all goals, policies, and recommendations in this Comprehensive Plan. It acknowledges continued growth and sets clear expectations for how change should occur in a way that preserves community character, protects natural resources, and supports the City's ability to provide services over time.

WHY THIS MATTERS

The Community Vision is not aspirational language alone. It balances community values with real world constraints so future decisions can be made consistently, transparently, and responsibly. By grounding the Vision in both values and capacity, the Plan helps avoid reactive decision-making and provides clarity for residents and developers alike.

VISION INPUTS

PLANNING GUIDANCE ONLY

This Comprehensive Plan is a long-range policy document adopted under the authority of the Texas Local Government Code. It is intended to provide guidance for future decision-making related to land use, infrastructure, public investment, and City services. The policies, maps, and recommendations in this Plan are advisory in nature and are intended to inform future actions of the City Council, Planning and Zoning Commission, City staff, and other decision makers as the City considers growth, redevelopment, and public investment over time.

HOW IT TURNS INTO POLICY

The Community Vision is not a static statement. It is the framework the City uses to guide decisions, investments, and policies over time. The Vision translates shared values and local realities into clear priorities that shape how Lago Vista grows and how public resources are used. Through this Comprehensive Plan, the Vision is carried forward into goals, policies, and maps that provide consistent direction for land use, infrastructure planning, and service delivery. These tools help ensure that day-to-day decisions align with long-term community priorities rather than responding to growth on a project-by-project basis.

INTENTIONAL AND ALIGNED GROWTH

This Plan establishes a framework for intentional, compatible growth that respects community character and natural features while directing development to appropriate locations. By aligning land use decisions with infrastructure capacity, fiscal sustainability, and service delivery, the Plan supports a high quality of life for residents and the City's ability to provide reliable services now and in the future.

DRAFT 02-04-2026

COMMUNITY CHARACTER

Objective CC.O1
Strengthen neighborhood livability and housing choice
- CC.O1.A1 Develop and maintain a housing assistance and information resource library for residents.
- CC.O1.A2 Encourage senior housing and age-friendly development in appropriate locations.
- CC.O1.A3 Support a range of compatible housing types while protecting neighborhood character.
- CC.O1.A4 Guide higher-density residential development using the Future Land Use framework and compatibility standards.

Objective CC.O2
Enhance civic spaces and community gathering places
- CC.O2.A1 Construct an indoor community center within the municipal complex.
- CC.O2.A2 Rebuild City Hall as a civic anchor and explore co-located public services.
- CC.O2.A3 Expand and modernize the Lago Vista Library, including staffing and programming.
- CC.O2.A4 Support year-round community events that reinforce local identity and civic pride.

Objective CC.O3
Protect scenic character and natural features
- CC.O3.A1 Strengthen education and enforcement related to tree preservation and land stewardship.
- CC.O3.A2 Incorporate scenic protection and natural feature preservation into development review.
- CC.O3.A3 Explore funding mechanisms to support public realm improvements in key areas such as Dawn Drive.

Objective CC.O4
Improve community engagement and communication
- CC.O4.A1 Expand public communication tools using clear, plain-language materials.
- CC.O4.A2 Increase opportunities for early engagement in planning and development discussions.
- CC.O4.A3 Pursue grant funding and partnerships to support community-focused initiatives.

MOBILITY

Objective M.O1
Improve multimodal connectivity
- M.O1.A1 Require pedestrian, bicycle, and path connections in new developments.
- M.O1.A2 Enhance pedestrian-oriented standards in planned developments and activity centers.
- M.O1.A3 Identify future golf cart, bicycle, and multi-use routes through a master planning effort.

Objective M.O2
Increase safety and emergency access
- M.O2.A1 Improve roadway safety through design standards and access management.
- M.O2.A2 Coordinate with TXDOT on RM 1431 safety and access improvements.
- M.O2.A3 Collect and analyze traffic and safety data to guide investments and enforcement.

Objective M.O3
Coordinate regional transportation efforts
- M.O3.A1 Participate in CapMetro and regional transit planning initiatives.
- M.O3.A2 Identify transportation projects eligible for regional and state funding programs.
- M.O3.A3 Educate the public on golf cart regulations and designated routes.

CITY SERVICES

Objective CS.O1
Improve emergency preparedness and hazard mitigation
- CS.O1.A1 Develop and publish a Community Evacuation Plan.
- CS.O1.A2 Provide public education on wildfire and hazard mitigation.
- CS.O1.A3 Create and maintain a mass debris removal plan for emergency events.
- CS.O1.A4 Pursue development of a Community Wildfire Protection Plan.

Objective CS.O2
Strengthen infrastructure resilience
- CS.O2.A1 Evaluate and upgrade fire hydrants and fire flow capacity.
- CS.O2.A2 Install backup generators at critical facilities.
- CS.O2.A3 Incorporate resilience functions into municipal facilities planning.

Objective CS.O3
Ensure long-term utility and resource management
- CS.O3.A1 Implement Water and Wastewater Master Plan recommendations.
- CS.O3.A2 Develop a regional stormwater management strategy.
- CS.O3.A3 Update drought contingency and water conservation plans regularly.
- CS.O3.A4 Promote low-impact development and green infrastructure practices.

DRAFT 02-04-2026

FUTURE LAND USE

Objective FLU.O1
Align growth with infrastructure and fiscal capacity
- FLU.O1.A1 Require annexation prior to extension of urban infrastructure into the ETJ.
- FLU.O1.A2 Coordinate land use decisions with infrastructure planning and service capacity.

Objective FLU.O2
Preserve open space and scenic resources
- FLU.O2.A1 Encourage conservation subdivision design where appropriate.
- FLU.O2.A2 Educate landowners on open space preservation tools and incentives.
- FLU.O2.A3 Explore funding mechanisms to support open space acquisition and preservation.

Objective FLU.O3
Improve predictability and consistency in development decisions
- FLU.O3.A1 Apply the Future Land Use Map consistently in policy and development review.
- FLU.O3.A2 Provide ongoing training for staff, boards, and elected officials.
- FLU.O3.A3 Conduct implementation workshops following plan adoption.

ECONOMIC DEVELOPMENT/FUNDING

Objective EV.O1
Support business attraction and retention
- EV.O1.A1 Streamline development review and permitting processes.
- EV.O1.A2 Improve coordination between departments involved in development review.

Objective EV.O2
Ensure infrastructure readiness for economic activity
- EV.O2.A1 Align infrastructure investment with targeted commercial and employment areas.
- EV.O2.A2 Support redevelopment and reinvestment in existing commercial corridors.

PARKS AND RECREATION

Objective PR.O1
Expand and enhance parks and open space
- PR.O1.A1 Improve access to existing parks and recreational facilities.
- PR.O1.A2 Expand trail connections and nature-based recreation opportunities.
- PR.O1.A3 Protect environmentally sensitive lands and scenic areas.

Objective PR.O2
Integrate parks into community life
- PR.O2.A1 Coordinate park planning with land use and transportation decisions.
- PR.O2.A2 Support programming that encourages outdoor activity and community interaction.

DRAFT 02-04-2026

HOW VALUES SHAPE DECISIONS AND DRIVE ACTION

The Community Values and Planning Principles provide the foundation for how this Comprehensive Plan is implemented. Together, they translate the Community Vision into clear expectations for decision-making, policy development, and day-to-day actions by the City. Community Values reflect what residents, stakeholders, and local leaders consistently identify as most important to protect as Lago Vista grows. Planning Principles describe how those values are applied when evaluating development proposals, infrastructure investments, and City initiatives. The Goals, Objectives, and Actions in this Plan operationalize those principles into measurable and accountable outcomes. This framework ensures that planning decisions are not made in isolation or on a project-by-project basis, but instead follow a consistent, transparent, and predictable approach that balances community priorities with technical and fiscal realities.

WHAT THE COMMUNITY EXPECTS TO PROTECT

The following values emerged consistently through public engagement, staff analysis, and review of existing conditions. These values serve as the lens through which all planning decisions should be evaluated.

Scenic Hill Country and Lake Character

Protect viewsheds, topography, tree canopy, and the visual identity that defines Lago Vista.

Neighborhood Identity and Stability

Maintain the scale, form, and character of existing neighborhoods while allowing thoughtful reinvestment.

Parks, Open Space, and Nature Access

Preserve and expand access to parks, trails, and natural areas that support recreation and quality of life.

Safety and Emergency Readiness

Ensure development supports safe evacuation, emergency response, and resilient infrastructure.

Fiscal Responsibility

Align growth with the City's ability to fund, maintain, and operate public services over time.

Transparency and Predictability

Provide clear expectations for residents, property owners, and the development community.

HOW VALUES ARE APPLIED IN PRACTICE

Planning Principles guide how the City evaluates proposals, prioritizes investments, and implements this Plan. They are not regulations, but consistent decision filters used across departments and governing bodies.

Preservation First

Natural features, scenic resources, and sensitive areas are treated as defining assets, not leftover land.

Compatibility Through Form and Context

Development should respond to surrounding land uses, scale, and character rather than rely solely on use classifications.

Context-Sensitive Growth

Growth should be directed to appropriate locations and scaled to available infrastructure and services.

Clarity Without Entitlement

The Plan provides guidance and expectations without conferring zoning or development rights.

DRAFT 02-04-2026

Infrastructure and Fiscal Alignment
Growth should not outpace infrastructure capacity, emergency access, or long-term maintenance funding.

Community-Informed Policy
Public input, adopted policies, and local conditions guide implementation decisions.

FROM VALUES TO ACTION- HOW THE PLAN IS EXECUTED
Community Values inform Planning Principles. Planning Principles shape Goals and Objectives. Goals are implemented through specific Actions assigned to departments, timelines, and reporting mechanisms. This structure ensures that:

- Values are reflected in measurable outcomes
- Decisions remain consistent across projects and years
- Growth supports long-term service delivery and fiscal sustainability
- Progress can be tracked and adjusted over time

DECISION-MAKING FRAMEWORK
When implementing the Goals and Actions of this Plan, the City evaluates decisions using the following considerations:

- Infrastructure capacity and service delivery
- Fiscal sustainability and long-term costs
- Emergency access and public safety
- Environmental constraints and natural systems
- Regional growth patterns and market demand
- Neighborhood compatibility and community character
- Parks, open space, and scenic resources

- Community input and adopted policy direction
- Relationship to Goals, Objectives, and Actions

Each Goal in this Plan is supported by clearly defined objectives and actions that align with the Community Values and Planning Principles. Actions are structured to:

- Be implementable within existing authority
- Align with infrastructure and budget planning
- Support predictable development review
- Allow annual reporting and periodic adjustment

This approach ensures that the Comprehensive Plan functions as both a visionary document and a practical tool for guiding Lago Vista's growth today and into the future.

DRAFT 02-04-2026

FUTURE LAND USE MAP

HOW TO READ THE FUTURE LAND USE MAP....18
FUTURE LAND USE PLACE TYPES....20
FUTURE LAND USE MAP....32

THE FRAMEWORK

The Future Land Use Plan establishes a long-range, place-based framework to guide how land within the City of Lago Vista and its Extraterritorial Jurisdiction (ETJ) should look, feel, and function over time. The Plan reflects the community's deeply held desire to preserve Lago Vista's identity as a semi-rural Hill Country lakeside community, while also ensuring the City remains fiscally sustainable and capable of maintaining the public services residents expect. The Future Land Use Plan is not a zoning map and does not grant development rights or entitlements. It does not predetermine specific land uses, densities, or development outcomes. Rather, it establishes policy guidance to inform zoning decisions, infrastructure planning, capital investments, and development review. All development proposals remain subject to the City's adopted zoning regulations and formal amendment processes, including public hearings before the Planning and Zoning Commission and City Council. This Plan emphasizes place types rather than land use silos, recognizing that the character of development is shaped as much by building form, scale, and context as by use alone. By focusing on how areas should relate to their surroundings, this Plan provides clarity while maintaining flexibility to respond to changing conditions over time. As Lago Vista evolves, the City may update its development regulations, including the potential adoption of a form-based or hybrid zoning code, to better implement the vision and policies of this Plan. Future regulatory tools will emphasize building form, site design, and compatibility, ensuring that growth reinforces community character rather than eroding it.

GENERAL AREA GUIDANCE

A Map will be placed here after the FLUM is finalized.

NOT PARCEL SPECIFIC

PRESERVATION AS A FOUNDATION
Protection of open space, natural landscapes, scenic views, wildlife habitat, and environmental systems is central to Lago Vista's identity and long-term quality of life.

FISCAL RESPONSIBILITY
Land use patterns must support the City's ability to maintain infrastructure, parks, public safety, and emergency services without placing undue burden on residents.

CLARITY WITHOUT ENTITLEMENT
The Plan provides direction without pre-approving development outcomes or bypassing established public processes.

COMPATIBILITY THROUGH FORM
New development should respect surrounding scale, massing, and character, regardless of use.

CONTEXT-SENSITIVE GROWTH
Growth should occur in appropriate locations, aligned with infrastructure capacity and community expectations.

FLEXIBILITY AND LONG-TERM ADAPTABILITY
The Future Land Use Plan must remain resilient and adaptable as conditions change over time.

DRAFT 02-04-2026

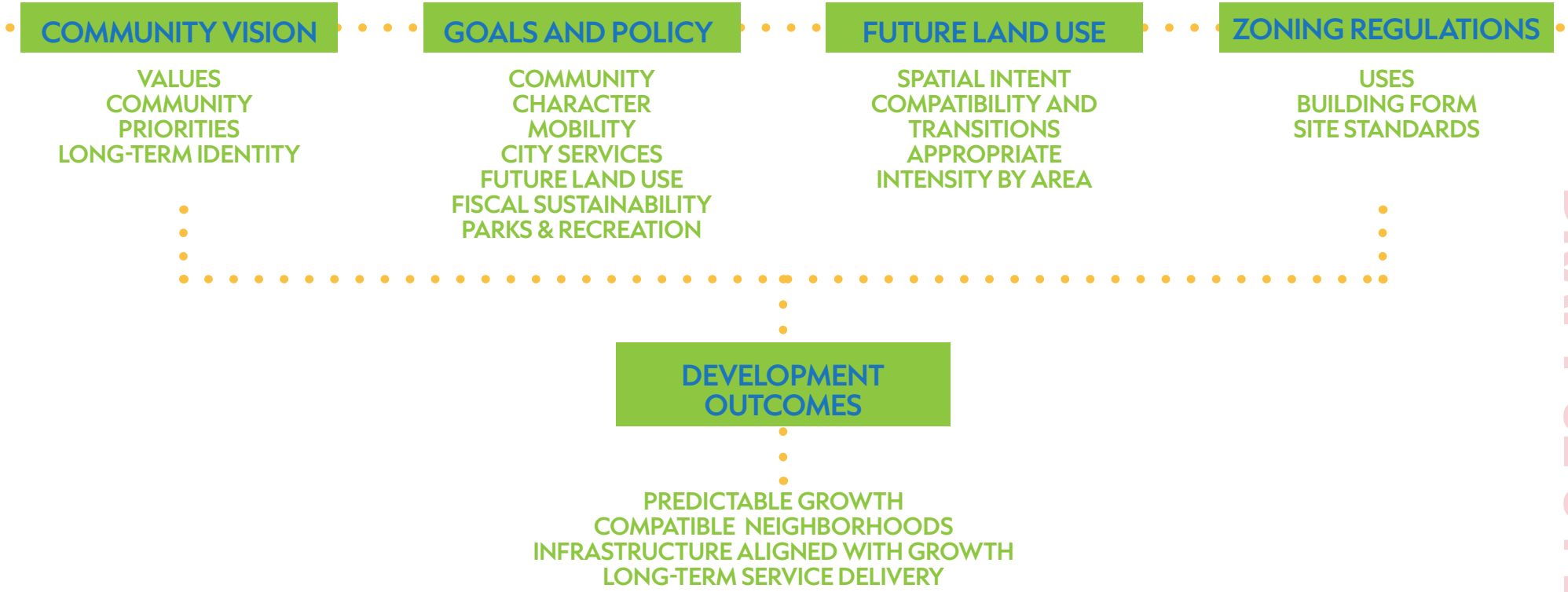

DRAFT 02-04-2026

FUTURE LAND USE AND ZONING: HOW THEY WORK TOGETHER

The Future Land Use and zoning are distinct tools, but they are intentionally linked through the City's broader planning framework. The Community Vision establishes what Lago Vista values and seeks to protect over time. The Plan's goals translate that vision into measurable priorities. The Future Land Use framework then provides the spatial guidance that connects those goals to specific places across the city and ETJ. Future Land Use expresses intent, not entitlement. It identifies where different place types belong, how they should relate to one another, and the level of intensity that is appropriate over time. Zoning is the regulatory mechanism that implements this intent by establishing enforceable standards related to use, building form, site design, and development review.

Together, these tools allow the City to move from vision to action in a deliberate and coordinated way. Future Land Use guides decisions before they become projects, while zoning ensures that individual developments align with community goals, infrastructure capacity, and service delivery expectations. This alignment supports predictable outcomes for residents, decision-makers, and the development community while maintaining flexibility to adapt to changing conditions.

FUTURE LAND USE PLACE TYPES

The Future Land Use Place Types describe the distinct kinds of places that collectively shape Lago Vista's character, appearance, and function over time. Rather than separating land strictly by use or prescribing predetermined development outcomes, these place types focus on built form, scale, context, and relationship to surrounding areas. This approach recognizes that the look and feel od development matters more to community character than the specific mix of uses it contains.

Each place type is intentionally broad and flexible. The descriptions that follow are illustrative rather than prescriptive, providing guidance on the desired character and development pattern without conferring zoning, density, or development rights. The intent is to communicate clear expectations about compatibility and design while allowing the City to respond thoughtfully to site conditions, environmental constraints, infrastructure capacity, and future community needs.

The place types are organized to reflect a gradual progression of intensity, from areas where the natural landscape remains the dominant feature, to compact centers that support daily activity and employment. Transitions between place types are deliberate and essential, ensuring that change occurs gracefully and that established neighborhoods and rural areas are protected from abrupt shifts in scale or character.

Together, these place types establish a shared framework for decision-making. They guide future zoning updates, infrastructure investments, and development review, and they lay the foundation for potential form-based or hybrid regulatory approaches that emphasize building form and compatibility over rigid use separation. By defining the kind of places Lago Vista seeks to create and preserve, this framework supports growth that is intentional, context-sensitive, and aligned with the community's values.

Diagram to go here.

DRAFT 02-04-2026

Place Type / Tier	Total Acerage	Residential Density (du/ac, gross)	Commercial / Nonresidential Intensity (FAR / Height – guidance)	Typical Lot Size & Character Target	Key Determination Factors
Rural Residential Tier 1		≤ 0.33	N/A	3 acres minimum (larger lots common)	High environmental sensitivity; steep slopes, floodplains, limited infrastructure, scenic/ridgeline importance, established ranchette patterns; lowest-intensity residential appropriate.
Rural Residential Tier 2		0.3 – 1.0	N/A	2 acres minimum	Partial infrastructure availability; moderate environmental constraints; established 2–3 acre estate patterns; functions as transition from Tier 1 to neighborhood-scale development.
Rural Residential Tier 3		~1.0	N/A	1 acre minimum	Established 1–2 acre plats; adequate infrastructure for limited neighborhood development; appropriate transition to Neighborhood Residential areas.
Neighborhood Residential		1 – 4	N/A	Match established subdivisions	Stable, detached single-family neighborhoods; intensity reflects existing plats and long-standing neighborhood character. Historic/legacy plats; one principal dwelling unit per platted lot; attached or multifamily only via rezoning/ PDD + replat.
Neighborhood Transition		4 – 8	N/A	~0.20 acres (guidance)	Intentionally mapped transition areas; step-down in height and intensity required adjacent to detached residential neighborhoods.
Neighborhood Activity Center		8 – 18	FAR 0.25–1.00; 2–5 stories (scaled by adjacency)	N/A	Compact, walkable centers intentionally mapped for mixed-use; higher-intensity residential integrated with services and employment.
Regional Commercial District		N/A	FAR 0.15–0.50; 1–3 stories	N/A	Regional-serving commercial activity; strong buffering, access management, and compatibility near residential areas.
Employment & Service District		N/A	FAR 0.20–0.60; 1–4 stories	N/A	Employment-focused uses; campus or corridor form; buffering required adjacent to residential areas.
Civic Places		N/A	Context-driven; typically 1–4 stories	N/A	Public, institutional, and community-serving facilities; intensity determined by adjacency and service function.
Parks & Conservation		N/A	No FAR (support facilities only)	N/A	Environmental protection, recreation, and open space; development subordinate to landscape and habitat preservation.
Scenic View & Corridor Preservation		Governed by underlying place type	Governed by underlying place type	Governed by underlying place type	Overlay guidance protecting viewsheds, ridgelines, gateways; additional siting, height, lighting, and canopy considerations apply.

DRAFT 02-04-2026

RURAL RESIDENTIAL

Rural Preservation Neighborhoods represent Lago Vista's most natural and environmentally sensitive areas. These places are defined by open landscapes, native vegetation, scenic views, and limited infrastructure. The intent of this place type is to preserve the Hill Country character by ensuring that development remains secondary to the land itself. Residential development is appropriate only at a rural scale and character, such as large-lot single-family homes, ranchettes, or conservation-oriented layouts that permanently protect significant open space. Buildings should be widely spaced and carefully sited to respect topography, tree cover, drainage patterns, and viewsheds, avoiding suburban or urban development patterns. Non-residential uses may be appropriate when they are clearly limited in scale and supportive of the rural setting. These may include limited agricultural activities, home-based businesses, and small-scale, tourism-oriented uses such as bed-and-breakfast establishments, provided they are low-impact and compatible with surrounding properties. Industrial uses are not appropriate in this place type. Civic and institutional uses, such as public gathering spaces or essential utility and service facilities, may be appropriate where they are designed to minimize visual, environmental, and traffic impacts. Parks, trails, conservation lands, greenbelts, and water quality features are integral to this place type and should be prioritized as permanent elements of the landscape.

Residential Uses	• Large-lot single-family detached homes • Ranchettes and estate-scale residences • Conservation-oriented residential development • Homesteads and estate residences
Commercial Uses	• Limited agricultural uses • Home-based businesses • Small-scale tourism or destination uses • Overnight accommodations such as bed-and-breakfasts
Civic/ Institutional Uses	• Places of public assembly • Essential utility and service facilities
Green Spaces	• Parks and recreation facilities • Conservation lands and natural areas • Open space and trail corridors • Water quality and environmental protection features
Industrial Uses	• Not appropriate
Tree Canopy	• 70-80%
Design Guidance	• Based on Tier
Density Guidance	• Residential density within Rural Preservation Neighborhoods varies by Rural Residential tier as described above and shall be guided by environmental conditions, infrastructure capacity, established development patterns, and scenic considerations • Density varies by Rural Residential tier as described above and is driven by environmental conditions, infrastructure capacity, and established development patterns • Density should be driven by environmental constraints rather than lot yield

Image

Image

Image

DRAFT 02-04-2026

RURAL RESIDENTIAL TIER SYSTEM

To ensure clarity, consistency, and long-term defensibility, Rural Preservation Neighborhoods are further described through a three-tier Rural Residential framework. This tier system is intended to reflect existing development patterns, environmental conditions, and infrastructure capacity, while reinforcing the City's policy commitment to preservation, predictability, and compatibility. These tiers do not establish zoning districts, minimum lot standards, or development entitlements; rather, they provide planning-level guidance for evaluating future land use decisions, rezonings, and amendments. The appropriate Rural Residential tier for a given area is determined by a combination of environmental sensitivity, infrastructure availability, established plat patterns, scenic significance, and adjacency to other place types. Where uncertainty exists, the more restrictive tier should be applied to preserve community character and environmental integrity.

TIER 1

Residential Density (du/ac, gross): ≤ 0.33
Minimum Lot Size: 3 acres minimum
Key Determination Factors: Applied where one or more of the following conditions are present at a scale that materially limits development intensity: (a) steep slopes, floodplains, critical environmental features, recharge zones, or sensitive watersheds; (b) limited or absent roadway, water, wastewater, or emergency-service infrastructure; (c) existing development pattern characterized by ranchettes or large tracts with minimal subdivision; (d) location within identified scenic viewsheds, ridgelines, wildlife corridors, or environmentally sensitive landscapes; or (e) policy intent to preserve the most rural character and lowest residential intensity regardless of theoretical yield.

TIER 2

Residential Density (du/ac, gross): 0.3 – 1.0
Minimum Lot Size: 2 acres minimum
Key Determination Factors: Applied where environmental and infrastructure constraints do not require Tier 1 intensity, but conditions still warrant estate-scale development, including: (a) partial infrastructure availability insufficient for conventional suburban densities; (b) moderate environmental constraints that support reduced intensity but allow limited subdivision; (c) established or platted development patterns consisting primarily of 2–3 acre lots; (d) functional transition areas between Tier 1 Rural Residential lands and neighborhood-scale residential areas; or (e) locations where maintaining estate character is necessary to preserve compatibility and scenic continuity.

TIER 3

Residential Density (du/ac, gross): ~ 1.0
Minimum Lot Size: 1 acre minimum
Key Determination Factors: Applied where conditions support the lowest-intensity form of neighborhood development, including: (a) established subdivision plats reflecting consistent 1–2 acre lot patterns; (b) roadway and utility infrastructure adequate to serve limited neighborhood-scale development; (c) proximity or adjacency to Neighborhood Residential place types where a gradual transition in intensity is appropriate; and (d) community expectations, market conditions, and adopted plans support preservation of large-lot neighborhood character rather than further subdivision.

DRAFT 02-04-2026

NEIGHBORHOOD RESIDENTIAL

Land That Leads, Development That Follows

Neighborhood Residential areas encompass the City's established and evolving neighborhoods where daily life occurs. These places are intended to provide stable, livable residential environments that are comfortable in scale, familiar in form, and adaptable over time while maintaining neighborhood identity. Residential uses are the primary focus of this place type and may include a range of housing forms that are compatible in scale and character. Buildings should relate to the street, maintain human-scaled proportions, and contribute to cohesive neighborhood patterns through consistent setbacks, landscaping, and architectural rhythm. Limited non-residential uses may be appropriate when they serve the surrounding neighborhood and are designed to remain secondary to the residential character. These may include small-scale civic uses, neighborhood-serving services, or home-based businesses where impacts are minimal. Industrial uses are not appropriate in Neighborhood Residential areas. Parks, trails, open spaces, and neighborhood civic spaces are strongly encouraged and should be integrated into neighborhood design to support walkability, connectivity, and community interaction.

Residential Uses	• Detached single-family homes • Cottage-style housing • Small-scale attached homes where consistent with established patterns
Commercial Uses	• Home-based businesses • Limited neighborhood-serving services
Civic/ Institutional Uses	• Neighborhood-scale civic uses • Schools and community facilities where compatible
Green Spaces	• Neighborhood parks and open spaces • Trails and pedestrian connections
Industrial Uses	• Not appropriate
Tree Canopy	• 50-60%
Design Guidance	• Buildings should relate to the street and reinforce walkability • Consistent setbacks, block patterns, and landscaping • Architectural compatibility emphasized over uniformity
Density Guidance	• Typical range: 1–4 units per acre, matching established subdivision patterns

Image

Image

Image

DRAFT 02-04-2026

NEIGHBORHOOD TRANSITION

Where Change Is Deliberate and Compatible

Residential Uses	• Duplexes • Townhomes • Cottage courts • Small-scale multifamily residential buildings
Commercial Uses	• Home-based businesses • Limited neighborhood-serving services
Civic/ Institutional Uses	• Neighborhood-scale civic uses • Community facilities where compatible
Green Spaces	• Shared open spaces • Trails and pedestrian connections • Landscaped buffers
Industrial Uses	• Not appropriate
Tree Canopy	• 45-65%
Design Guidance	• Step-down building heights adjacent to lower-density neighborhoods • Enhanced buffering and screening near detached residential areas • Parking minimized and screened from public view
Density Guidance	• Typical range: 4–8 units per acre, applied only where Transition areas are intentionally mapped

Image

Image

Image

Neighborhood Transition areas provide a deliberate and thoughtful bridge between lower-intensity residential neighborhoods and more active areas of the City. These places are intended to manage change in a way that feels intentional, predictable, and compatible, allowing Lago Vista to accommodate a broader range of housing options without abrupt shifts in scale or character. Residential uses remain the primary focus of this place type, but with greater flexibility in building form and arrangement. Development should maintain a residential character while allowing for slightly more compact patterns where appropriate. Buildings should be similar in height and visual presence to nearby neighborhoods, with careful attention to massing, articulation, setbacks, and landscaping to ensure compatibility. Limited non-residential uses may be appropriate when they are small-scale, neighborhood-serving, and clearly secondary to the residential environment. These uses should be designed to minimize traffic, noise, and visual impacts. Industrial uses are not appropriate within Neighborhood Transition areas. Parks, shared open spaces, trails, and landscaped buffers are encouraged as key tools for softening transitions and reinforcing neighborhood cohesion. These areas should function as connectors and buffers rather than destinations.

DRAFT 02-04-2026

NEIGHBORHOOD ACTIVITY

Compact, Walkable Places for Daily Life

Neighborhood Activity Centers are compact, walkable hubs that bring together housing, services, employment, and gathering spaces in close proximity. These areas are intended to serve nearby neighborhoods by supporting daily needs, local businesses, and social interaction while remaining distinctly local in scale and character. A mix of residential and non-residential uses is appropriate within Neighborhood Activity Centers, provided development is organized around high-quality building form and pedestrian-oriented design. Buildings should frame streets and public spaces, emphasize active ground floors, and create a comfortable public realm. Residential uses may be located above or adjacent to commercial or civic uses. Commercial and civic uses should be neighborhood-serving rather than regional in nature. Industrial uses are not appropriate in this place type. Public spaces such as plazas, courtyards, and trail connections should be integral components that support walkability and community life.

Residential Uses	• Apartments and condominiums • Townhomes and attached residential buildings • Residential units within mixed-use buildings
Commercial Uses	• Neighborhood-serving retail and services • Restaurants, cafés, and personal services • Offices and professional services
Civic/ Institutional Uses	• Civic and cultural facilities • Public gathering spaces
Green Spaces	• Plazas and courtyards • Trails and pedestrian connections
Industrial Uses	• Not appropriate
Tree Canopy	• 30-40%
Design Guidance	• Buildings should frame streets and public spaces • Active ground floors prioritized along primary pedestrian routes • Parking located behind or beneath buildings
Density Guidance	• Typical residential range: 8–18 units per acre, applied only where Activity Centers are intentionally mapped

Image

Image

Image

DRAFT 02-04-2026

REGIONAL COMMERCIAL

Strategic Destinations with Community Accountability

Residential Uses	• Residential uses integrated within mixed-use developments
Commercial Uses	• Regional retail and entertainment uses • Hospitality and lodging • Offices and professional services • Larger service-oriented commercial uses
Civic/ Institutional Uses	• Civic uses that support regional activity
Green Spaces	• Landscaped buffers and open spaces • Pedestrian connections
Industrial Uses	• Limited industrial uses compatible in form and impact
Tree Canopy	• 20-30%
Design Guidance	• Shared access and consolidated driveways • Enhanced landscaping and visual buffering • Buildings organized into cohesive centers rather than strip patterns
Density Guidance	• Non-residential intensity guided by FAR and height ranges appropriate to context

Regional Commercial Districts accommodate larger-scale commercial activity that serves Lago Vista and the surrounding region. These areas play an important role in supporting the City's fiscal sustainability by generating sales tax revenue and employment opportunities needed to maintain public services and infrastructure. Commercial and service uses are the primary focus of this place type. Development should be designed to function efficiently while remaining sensitive to Lago Vista's character through coordinated site design, shared access, strong landscaping, and buffering from surrounding uses. Buildings should be arranged to minimize visual and traffic impacts and to create cohesive, well-organized destinations. Residential uses may be appropriate only when integrated into a mixed-use environment and designed to buffer adjacent development. Industrial uses may be appropriate only where they function similarly to commercial uses and are compatible in appearance and impact.

DRAFT 02-04-2026

Image

Image

Image

EMPLOYMENT & SERVICE DISTRICT

Working Places That Support Community Life

Employment & Service Districts provide locations for businesses, services, and employment opportunities that support Lago Vista's long-term economic health and service capacity. These areas help diversify the City's tax base and reduce reliance on residential development alone to fund public services. Employment-focused uses are the primary component of this place type. Development should emphasize quality, functionality, and compatibility, with well-designed buildings, landscaped setbacks, and coordinated access. Development patterns may be corridor-oriented or campus-style where they integrate well with surrounding uses. Residential uses are generally not appropriate in Employment & Service Districts except where integrated into a designated mixed-use environment. Industrial uses may be appropriate when they are low-impact in nature and compatible with surrounding development.

Residential Uses	• Residential uses only when integrated into mixed-use
Commercial Uses	• Offices and professional services • Business and service uses supporting employment
Civic/ Institutional Uses	• Training, education, or service facilities related to employment
Green Spaces	• Landscaped setbacks and open spaces • Pedestrian connections
Industrial Uses	• Light, low-impact industrial and service uses
Tree Canopy	• 20-30%
Design Guidance	• Strong buffering where adjacent to residential areas • High-quality building materials and landscaping • Efficient circulation for service and employment uses
Density Guidance	• Employment-focused intensity guided by FAR and height ranges

Image

Image

Image

DRAFT 02-04-2026

PARKS & CONSERVATION

The Green Framework That Shapes the City

Residential Uses	• Not appropriate.
Commercial Uses	• Not appropriate.
Civic/ Institutional Uses	• Passive recreation facilities and support structures only
Green Spaces	• Parks • Greenbelts • Conservation lands • Trails and water quality features
Industrial Uses	• Not appropriate.
Tree Canopy	• 85-100%
Design Guidance	• Design should follow natural landforms, avoid ridgelines where feasible, and minimize grading and impervious cover • Materials, colors, and lighting should reinforce a natural character and reduce visibility from surrounding areas • Trails, access points, and support facilities should be integrated into the landscape rather than imposed upon it
Density Guidance	• Built facilities limited to accessory structures (e.g., restrooms, trailheads, shelters) scaled to serve park and conservation functions

Image

Image

Image

Parks & Conservation Areas form the environmental and open-space framework that shapes Lago Vista's growth and preserves its Hill Country identity. These areas protect sensitive environmental systems, water quality, wildlife habitat, and scenic landscapes while providing opportunities for recreation and public enjoyment. They function as both community amenities and essential infrastructure supporting long-term resilience and quality of life. Development within Parks & Conservation Areas should be subordinate to the landscape and limited to facilities that directly support recreation, conservation, or resource management. Design should emphasize minimal disturbance, natural materials, and integration with existing landforms and vegetation. Buildings, structures, and improvements should be low-profile, dispersed, and carefully sited to preserve open character and ecological function. These areas also serve an important structural role within the broader land use pattern by providing buffers between differing intensities, preserving visual continuity, and anchoring trail networks and green corridors. Commercial and residential development is generally not appropriate, except where expressly allowed through a formal public process and designed to remain incidental to the conservation purpose.

DRAFT 02-04-2026

CIVIC/INSTITUTIONAL

Public Anchors That Serve the Community

Civic & Institutional Places accommodate public, institutional, and community-serving facilities that provide essential services, cultural functions, and gathering spaces for residents and visitors. These areas serve as civic anchors within the community and play a key role in supporting public safety, education, governance, and social infrastructure. Development in Civic & Institutional Places should emphasize context-sensitive form, accessibility, and long-term public value. Buildings should be designed to integrate with surrounding development through appropriate scale, massing, setbacks, and landscaping, with attention to pedestrian access and public realm quality. Civic buildings may function as focal points but should not introduce incompatible intensity into adjacent residential or conservation areas. While residential and commercial uses are generally not primary components of this place type, complementary uses may be appropriate where they directly support civic functions and are designed as part of a coordinated, mixed-use civic environment. Overall intensity, building form, and site design should be driven by service function and adjacency, ensuring civic uses enhance, rather than disrupt, surrounding neighborhoods and place types.

Residential Uses	• Residential uses only when integated into a coordinated mixed-use civic environment
Commercial Uses	• Limited commercial uses may be appropriate only when clearly ancillary to civic or institutional functions, such as cafés, meeting-support services, or professional offices directly associated with public or institutional operations
Civic/ Institutional Uses	• Government facilities, public safety facilities, libraries, schools, community centers, utilities, cultural facilities, and other public or institutional uses that serve community needs and provide essential services
Green Spaces	• Civic plazas, courtyards, publicly accessible open spaces, landscaped setbacks, and civic greens designed to support gathering, accessibility, and transition to surrounding uses. • Pedestrian connections linking civic facilities to neighborhoods, activity centers, and trail networks
Industrial Uses	• Not appropriate, except for limited utility or service functions directly associated with civic infrastructure and designed to minimize visual, noise, and operational impacts
Tree Canopy	• 30-50%
Design Guidance	• Context-sensitive building scale and massing responsive to adjacent place types • Strong buffering and landscape transitions where adjacent to residential or conservation areas • High-quality architectural materials and durable construction reflective of long-term public investment • Buildings oriented to reinforce civic presence, public access, and pedestrian connectivity. Parking and service areas located and screened to minimize visual impacts
Density Guidance	• Non-residential intensity guided by FAR and height ranges appropriate to context

Image

Image

Image

DRAFT 02-04-2026

SCENIC VIEW & CORRIDOR PRESERVATION

Land That Leads, Development That Follows

Residential Uses	• Aligned with the base Place Type
Commercial Uses	• Aligned with the base Place Type
Civic/ Institutional Uses	• Aligned with the base Place Type
Green Spaces	• Aligned with the base Place Type
Industrial Uses	• Aligned with the base Place Type
Tree Canopy	• Aligned with the base Place Type
Design Guidance	• Buildings should step with natural topography and avoid silhouetting along ridgelines and horizon lines • Height, massing, and roof forms should be designed to visually recede into the landscape • Lighting, signage, and infrastructure should minimize glare and visual intrusion, particularly along corridors and viewpoints • Site layouts should preserve view corridors from public roadways, parks, and water bodies
Density Guidance	• Aligned with the base Place Type

Image

Image

Image

Scenic View & Corridor Preservation Areas protect Lago Vista's most significant viewsheds, ridgelines, gateways, and visually prominent corridors, reinforcing the City's identity as a lakeside Hill Country community. These areas repersent a visual asset to the community and how development is seen is as important as how it functions. This place type operates as an overlay, applying additional policy guidance to underlying place types rather than establishing independent development rights. Development within Scenic View & Corridor Preservation Areas should be shaped by heightened attention to building height, massing, orientation, grading, lighting, and landscaping to ensure structures do not dominate or fragment important views. Design within these areas should prioritize preservation of natural landforms, tree canopy, and horizon lines, with buildings stepping down with topography and visually receding into the landscape. Infrastructure, signage, and site improvements should be designed to minimize visual intrusion and reinforce scenic continuity along roadways, shorelines, and gateways. Intensity and use are governed by the underlying place type, with scenic protection serving as an additional compatibility layer.

DRAFT 02-04-2026

DRAFT 02-04-2026

DRAFT 02-04-2026

PARKS

XXXXX.....X
XXXXX.....X
XXXXX.....X

MOBILITY, SAFETY, AND INFRASTRUCTURE

TRANSPORTATION AND MOBILITY.....X
EVACUATION AND EMERGENCY ACCESS.....X
UTILITIES AND INFRASTRUCTURE.....X

ROADWAYS TO THE FUTURE

Lago Vista's mobility system must function safely, efficiently, and predictably under projected build-out conditions. Transportation planning is directly tied to future land use intensity, projected trip generation, roadway classification, and capital investment timing. As development patterns evolve, traffic demand increases and must be accommodated through a clearly defined roadway hierarchy. Regional arterials move traffic across the City and support broader connectivity; collectors distribute traffic between neighborhoods and activity areas; and local streets provide direct parcel access and neighborhood circulation. This functional hierarchy ensures that roadway design, access management, and infrastructure investments align with planned growth patterns, supporting long-term mobility, safety, and service delivery.

DRAFT 02-04-2026

FUTURE LAND USE MAP

PROJECTED TRIPS

ROADWAY CLASSIFICATIONS

CAPITAL IMPROVEMENTS

ROADWAY PERFORMANCE

	Classification	Principal Arterial	Minor Arterial	Major Collector	Minor Collector	Local Street
Function	Purpose (Mobility vs. Access)	Mobility, regional connectivity	Mobility, cross-city connectivity	Access between arterials and local streets	Access between arterials and local streets	Property access and neighborhood connectivity
	ROW (feet)	150-200	70-80	70-80	60-70	50
	Design Speed (mph)	45-60	40-50	30-40	30-40	20-35
Streetway	Number of Travel Lanes	4-6	3-5	2-4	2-3	2
	On-Street Parking	N	N	Y	Y	Y
	Truck Routes	Y	Y	N	N	N
	Medians	Y	Y	Y	N; continuous left-turn lane	N
	Bikeways	N	Y; protected	Y; dedicated	Y; dedicated	Y; unmarked
Streetside	Sidewalks (recommended minimum width)	Single sides - 10 feet; 6 feet Both sides - 8 feet	Single sides - 10 feet; 6 feet Both sides - 8 feet	Both sides - 6 feet	Single side - 8 feet Both sides - 5 feet	Single side - 4 feet
	Edge Zone Width (feet)	8-10	5-8	5	2-5	2
	Landscaping	Y; edge zones and medians	Y; edge zones and medians	Y; edge zones and medians	Y; edge zones	Natural or privately maintained
	Residential Driveways	N	N	N	Y	Y

The mobility network must function safely and reliably under projected build-out conditions. Transportation planning is directly tied to land use intensity, emergency access, and infrastructure investment timing.

THOROUGHFARE MAP

DRAFT 02-04-2026

UNIQUE CHALLENGES

Lago Vista's geography; peninsulas, limited bridge crossings, and dependence on RM 1431 and Lohman Ford Road, creates inherent evacuation and emergency access constraints. As growth continues, ensuring reliable multi-directional access is critical to public safety, response times, and long-term resilience. Emergency access planning must align with land use intensity, roadway classification, and future connectivity improvements.

DRAFT 02-04-2026

LOCAL STREETS

COLLECTORS

MINOR ARTERIALS

FM 1431

Future Land Use Place Type	Typical Roadway Classification	Mobility vs Access Role	Minimum Access Redundancy	Emergency Risk Profile	Planning Expectation
Rural Preservation Neighborhood (≤1 du/ac)	Local Street / Minor Collector	High access / low mobility	Single access may be acceptable where terrain limits connectivity	Low population load; extended response times possible	Avoid isolated dead-end extensions; encourage stub-outs where feasible; preserve terrain and natural corridors
Neighborhood Residential (1–4 du/ac)	Minor Collector	Balanced access and mobility	Secondary emergency access strongly encouraged	Moderate congestion during peak periods	Require connectivity to adjacent subdivisions; discourage single-entry developments
Neighborhood Transition (4–8 du/ac)	Major Collector	Balanced-to-mobility	Two points of access required	Elevated congestion under peak load	Direct connection to collector network; avoid reliance on single feeder corridors
Neighborhood Activity Center (8–18 du/ac; mixed-use)	Minor Arterial / Major Collector	Higher mobility emphasis	Direct arterial access + redundant collector connections	High trip generation and intersection load	Signalized access; intersection capacity and multimodal access critical
Regional Commercial District	Principal / Minor Arterial	High mobility; controlled access	Multiple ingress/ egress required; internal circulation redundancy	High vehicle volumes; intersection bottleneck risk	Access management required; shared driveways and coordinated circulation
Employment & Service District	Minor / Principal Arterial	High mobility; freight movement support	Multiple access points required	Heavy vehicle interaction; peak-hour surges	Direct arterial access; internal network connectivity; truck route alignment
Civic & Institutional	Major Collector / Arterial	Context-driven; priority response access	Redundant emergency access required for public safety facilities	Critical public function; must remain accessible under stress	Direct connection to arterial or major collector; avoid siting on single-access local roads
Parks, Open Space & Conservation	Local / Minor Collector	Access-oriented; low mobility	Single access acceptable depending on size and use	Event-based congestion possible	Provide emergency access where public assembly occurs; maintain trail and service access
Scenic Corridor Overlay (applies across types)	Matches underlying classification	Emphasizes safety, speed moderation, visibility	No reduction in redundancy; preserve corridor functionality	Curve-related crash sensitivity	Access management, grading control, sight-line preservation

THOROUGHFARE , FLUM AND EMERGENCY MAP

DRAFT 02-04-2026

UTILITY EXPANSION

Infrastructure capacity directly determines where and how growth can occur. Water, wastewater, stormwater, and service delivery systems must support projected build-out conditions without creating long-term operational or fiscal strain. Utility planning is coordinated with the Future Land Use Map, ensuring that development intensity aligns with system capacity, timing of improvements, and capital investment strategy.

DRAFT 02-04-2026

FUTURE LAND USE MAP

PROJECTED UTILITY DEMAND

CURRENT CAPACITY

CAPITAL IMPROVEMENTS

DELIVERY PERFORMANCE

FLUM Place Type	Water Demand	Waste Demand	Stormwater Sensitivity	Key System Constraints	Infrastructure Risk Level	Planning Response
Rural Preservation	Low	Low	Terrain-driven runoff	Limited gravity sewer; elevation	Low	Avoid extending urban infrastructure; maintain natural drainage
Neighborhood Residential	Moderate	Moderate	Moderate	Pressure zones; lift station reach	Moderate	Align subdivision phasing with system capacity
Neighborhood Transition	Elevated	Elevated	Moderate–High	Pump station capacity; pipe sizing	Moderate–High	Require capacity verification prior to zoning
Neighborhood Activity Center	High	High	High (impervious cover)	Treatment plant timing; storm detention	High	Coordinate with CIP; phase infrastructure upgrades
Regional Commercial District	High	High	Moderate	Peak flow variability	High	Direct service from major lines; require impact analysis
Employment & Service District	High (variable)	High (variable)	Moderate	Industrial discharge controls; capacity thresholds	High	Align with trunk infrastructure; internal system redundancy
Civic & Institutional	Variable	Variable	Moderate	Critical facility reliability	Context-based	Redundant service connections required
Parks & Conservation	Low	Minimal	Low–Moderate	Drainage conveyance	Low	Preserve natural systems; limit impervious expansion
Scenic Corridor Overlay	Matches underlying use	Matches underlying use	High (grading sensitivity)	Erosion, slope stability	Elevated (site-specific)	Enhanced stormwater and grading standards

Utility planning is not reactive. It establishes where growth can be supported efficiently and where phased investment is required. Aligning imfrastructure planning with land use ensures reliable service delivery, protects public health, and supports long-term fiscal sustainability.

UTILITY MAIN MAPPING

DRAFT 02-04-2026

RECOMMENDATIONS AND FUNDING THE VISION

RECOMMENDATIONS.....X
FUNDING THE VISION.....X

INTRODUCTION

The success of this Plan comes through effective implementation of the plan recommendations. Only through implementation will the vision of the Plan become reality. This chapter identifies a series of objectives and associated actions to achieve the goals set out in Community Conversations: Engagement and Vision.

These goals were crafted and approved by the community of Lago Vista and are presented in the order ranked on the online survey. The embodied guidance provided in the recommendations identify key information and next steps toward implementation.

HOW TO USE THIS CHAPTER

The recommendations are grouped under the six goal categories, Community Character, Mobility, City Services, Future Land Use, Economic Development, and Parks and Recreation. Each of these goals are further refined by objectives. Each objective includes a corresponding set of actions which comprise the Plan recommendations.

Effective implementation of the Plan's recommendations will require interpretation, adaptability, and flexibility. The recommendations should be thoughtfully approached and evaluated based on compliance and implementation with the goals, commitments, and initiatives set forth within this Plan.

COMMUNITY CHARACTER

Lago Vista will preserve its unique identity as a scenic, hill country city with a close-knit community, beautiful lake views, and peaceful nature.

CITY SERVICES

Lago Vista will provide high-quality municipal services that prioritize efficiency, sustainability, reliability, and enhance the quality of life for residents.

FUTURE LAND USE

Lago Vista will manage the direction of growth and development through a thoughtfully planned land use pattern.

ECONOMIC DEVELOPMENT/FUNDING

Lago Vista will cultivate a thriving economy that supports diverse retail offerings, services, and employment opportunities.

MOBILITY

Lago Vista will have a well-planned street network that prioritizes safety and efficiency.

PARKS AND RECREATION

Lago Vista will improve its park system to provide spaces for people to play, gather, and enjoy nature.

DRAFT 02-04-2026

COMMUNITY CHARACTER

Lago Vista will preserve its unique identity as a scenic, hill country city with a close-knit community, beautiful lake views, and peaceful nature.

Throughout this Planning process, the importance of preserving Lago Vista's scenic nature, lake vistas, and strong sense of community has been a consistent priority.

The Community Character Goal received overwhelming support, with 89% of survey respondents agreeing that protecting these qualities is essential for the city's future. Additionally, 75% of respondents cited the lake and natural scenery as the primary reasons they chose to move to Lago Vista. Preserving these defining characteristics and enhancing the ability for the community to gather will be critical in maintaining the charm and appeal that residents cherish. Thoughtful planning and design will help integrate new housing, green spaces, and public amenities in a way that complements the city's natural beauty and fosters lasting connections among residents.

To support this vision, Lago Vista will invest in expanding and improving municipal facilities to create more opportunities for community gathering and engagement. Parks, event spaces, and multi-use community centers can serve as hubs for local activities, bringing people together and reinforcing civic pride. Strengthening communication and outreach efforts will also be essential in bolstering civic engagement, ensuring that residents feel informed, heard, and involved in shaping the city's future.

Taking steps to preserve its scenic charm, enhancing neighborhood livability and quality for all residents, and fostering a strong sense of belonging, will ensure that Lago Vista continues to be a place where people take pride in their community and feel connected to both their neighbors and the surrounding natural environment.

COMMUNITY CHARACTER

Objective CC.O1

Strengthen neighborhood livability and housing choice

- CC.O1.A1 Develop and maintain a housing assistance and information resource library for residents.
- CC.O1.A2 Encourage senior housing and age-friendly development in appropriate locations.
- CC.O1.A3 Support a range of compatible housing types while protecting neighborhood character.
- CC.O1.A4 Guide higher-density residential development using the Future Land Use framework and compatibility standards.

Objective CC.O2

Enhance civic spaces and community gathering places

- CC.O2.A1 Construct an indoor community center within the municipal complex.
- CC.O2.A2 Rebuild City Hall as a civic anchor and explore co-located public services.
- CC.O2.A3 Expand and modernize the Lago Vista Library, including staffing and programming.
- CC.O2.A4 Support year-round community events that reinforce local identity and civic pride.

Objective CC.O3

Protect scenic character and natural features

- CC.O3.A1 Strengthen education and enforcement related to tree preservation and land stewardship.
- CC.O3.A2 Incorporate scenic protection and natural feature preservation into development review.
- CC.O3.A3 Explore funding mechanisms to support public realm improvements in key areas such as Dawn Drive.

Objective CC.O4

Improve community engagement and communication

- CC.O4.A1 Expand public communication tools using clear, plain-language materials.
- CC.O4.A2 Increase opportunities for early engagement in planning and development discussions.
- CC.O4.A3 Pursue grant funding and partnerships to support community-focused initiatives.

DRAFT 02-04-2026

OBJECTIVE 1: STRIVE TO STRENGTHEN NEIGHBORHOODS AS PLACES OF QUALITY, COMMUNITY, AND LIVABILITY.

Action 1: Develop an information library of housing assistance resources for residents either online or at City offices and keep it up to date.

Some examples could include links or references to homebuyer assistance programs, emergency rental assistance programs, aging in place programs, weatherization grants, fair housing information, etc.

Action 2: Incentivize the development of senior housing through expedited permitting, fee reduction or waivers, or public-private partnerships.

There are currently no housing options for senior citizens to remain living in Lago Vista unless they live alone. The City should support the creation of retirement communities, assisted living, and other options for senior citizens who wish to remain in Lago Vista.

Action 3: Encourage the development of strategically located higher density residential developments using the future land use plan and location criteria developed by the Advisory Committee.

Many residents and potential homebuyers are seeking alternatives beyond traditional single-family homes or large apartment complexes. One approach to addressing this need is through the introduction of missing middle housing, which refers to housing types that offer more units than a single-family home but fewer than mid- or high-rise developments. Expanding missing middle housing options in Lago Vista would help meet the needs of young professionals, retirees, and families looking for attainable housing while preserving the community's character.

Action 4: Strengthen the tree preservation ordinance through education orsome other means.

Clearcutting was mentioned frequently by the public during this planning process, review the tree preservation ordinance and consider if enhancements would benefit the city. Chapter 14 Zoning, part 4, section 20 establishes regulations for tree preservation in development in Lago Vista.

OBJECTIVE 2: EXPAND OR BUILD MUNICIPAL FACILITIES TO CREATE PLACES TO GATHER AS A COMMUNITY.

Action 1: Construct an indoor community center in the municipal complex on Dawn Drive that serves as a central hub for residents, offering versatile spaces for fitness, sports, recreation, gatherings, senior and youth programming, and community gathering.

This is one of the top priorities from the Advisory Committee and the residents of Lago Vista. Consider conducting a feasibility study, pursuing TPWD Indoor Recreation Grants, or contacting other cities with new community centers to learn about next steps or important considerations.

Action 2: Build a new City Hall in the municipal complex on Dawn Drive and anchor it as the civic hub of the community.

The City is currently exploring options to rebuild City Hall. In addition, the City should continue to evaluate the possibility of incorporating other civic uses, such as a new library or community center.

Action 3: Expand the library and upgrade its amenities.

The Library, which was built in 1977, is in great need of a larger facility with modern updates that is better able to serve the growing population. With the reconstruction of City Hall, and the potential for a new community center, this could be a good opportunity for a new library as well. Consider a larger children's area, small study rooms with windows, a small meeting room to accommodate three to 14 people, space for additional shelving and a self-checkout machine. Ensure any expansions or new buildings have enough outlets and electronic facilities.

DRAFT 02-04-2026

Action 4: Continue to adequately staff the library and hire a Children's Librarian.
If the Library expands in size, additional staff will be needed to oversee a larger facility and to assist the anticipated increase in the number of people using the Library. A professional "Children's Librarian" will be needed to oversee and provide the kind of programs and services that are expected in a larger library.

Action 5: Offer senior computer safety courses and other programming for seniors at the library or future indoor community center.
Offering senior computer safety courses will help older residents navigate the digital world with confidence, protecting them from online scams, fraud, and identity theft. Providing these and other senior-focused programs at the library or a future community center will promote lifelong learning and social engagement.

Action 6: Support opportunities for year-round programming, special event activities that reinforce community perceptions of sense of community and small-town character.
Small-town character is built on a foundation of engaging local events. Year-round programming and special events play a vital role in fostering a sense of belonging, strengthening community ties, and celebrating the small-town character that residents value.

Action 7: Explore a financing district or mechanism for public improvements to spur investment on Dawn Drive.
Establishing a financing district or other funding mechanism for public improvements on Dawn Drive could stimulate economic growth, attract new businesses, and enhance the area's overall appeal. Strategic investments in infrastructure, streetscape enhancements, and pedestrian-friendly amenities can help transform Dawn Drive into a vibrant, walkable corridor that benefits both residents and visitors.

OBJECTIVE 3: BOLSTER CIVIC ENGAGEMENT TO FOSTER COMMUNITY TRUST AND PRIDE.

Action 1: Hire or contract services for a grant writer to assist the City in finding and applying for grants to fund plan implementation.
Identifying, applying for, and managing grants is a time-intensive process. The City should assess the necessary resources for grant administration and ensure that either a dedicated staff member has the capacity to manage these responsibilities or explore the option of outsourcing grant services to a qualified professional.

Action 2: Explore the possibility for cross municipal partnerships between Cedar Park, Jonestown, or other communities for regional trails, transportation, open space preservation, or other such partnerships.
Seek to maintain good relationships with neighboring municipalities and where possible explore innovative solutions or opportunities for community improvement.

Action 3: Enhance the City's community outreach and engagement strategies to foster dialogue, build community trust, and encourage informed and civil civic participation.
Explore methods to further enhance the City's engagement strategies to foster civic participation. Strategies could include ensuring use of plain English instead of technical jargon, new digital methods of engagement, coffee with the mayor, etc.

DRAFT 02-04-2026

MOBILITY

Lago Vista will have a well-planned street network that prioritizes safety and efficiency.

Lago Vista's street network will be designed with safety as the highest priority, reflecting the concerns of local residents. Implementing on- and off-street design improvements will help reduce accidents and create a safer environment for all road users. Additionally, road maintenance and improved emergency response will ensure that the city's infrastructure supports both everyday travel and critical situations.

Efficiency is equally important in Lago Vista's transportation network, with a focus on well-planned connections between neighborhoods that improve mobility. A thoughtfully designed network will provide multiple routes for travel, reducing bottlenecks and enhancing access to key destinations. Through integrating safety and efficiency into street planning, Lago Vista will create a transportation system that not only protects residents but also enhances overall quality of life, making travel smoother and more reliable for everyone.

Numerous Lago Vista residents voiced significant concerns regarding traffic conditions along RM 1431, including speeding, congestion, and a high frequency of near-miss incidents.

Many pointed out that the intersection at Bar K Ranch Road and RM 1431 has become particularly problematic, highlighting a need for a traffic light or additional safety measures to manage the flow of vehicles. In addition, residents expressed a desire for more effective signage, road markings, and traffic calming strategies—such as improved lighting and enforcement—to slow down traffic and reduce the likelihood of crashes.

MOBILITY

Objective M.O1

Improve multimodal connectivity

- M.O1.A1 Require pedestrian, bicycle, and path connections in new developments.
- M.O1.A2 Enhance pedestrian-oriented standards in planned developments and activity centers.
- M.O1.A3 Identify future golf cart, bicycle, and multi-use routes through a master planning effort.

Objective M.O2

Increase safety and emergency access

- M.O2.A1 Improve roadway safety through design standards and access management.
- M.O2.A2 Coordinate with TXDOT on RM 1431 safety and access improvements.
- M.O2.A3 Collect and analyze traffic and safety data to guide investments and enforcement.

Objective M.O3

Coordinate regional transportation efforts

- M.O3.A1 Participate in CapMetro and regional transit planning initiatives.
- M.O3.A2 Identify transportation projects eligible for regional and state funding programs.
- M.O3.A3 Educate the public on golf cart regulations and designated routes.

DRAFT 02-04-2026

OBJECTIVE 1: SUPPORT IMPROVEMENTS TO MULTI-MODAL TRANSPORTATION THROUGHOUT LAGO VISTA.

Action 1: Amend the zoning and subdivision ordinances to require new residential developments to connect new networks of sidewalks, paths and/or bike routes within neighborhoods to nearby collectors and arterial streets or adjacent developments.
Ensuring these connections will enhance mobility, improve pedestrian and cyclist safety, and promote alternative transportation options. Additionally, well-connected neighborhoods foster a sense of community by making it easier for residents to walk or bike to nearby destinations rather than relying solely on automobiles.

Action 2: Consider implementing enhanced development standards that apply to PDDs to encourage higher quality, pedestrian oriented development.
Establishing specific guidelines for walkability, streetscaping, and mixed-use integration within PDDs can create more vibrant, accessible spaces. These standards can include requirements for wider sidewalks, street trees, pedestrian-scale lighting, and building placement that prioritizes accessibility and connectivity.

Action 3: During the next update to the Transportation Master Plan or as part of a Trails Master Plan, identify bicycle or golf cart routes to create a multi-modal network.
Mapping out key corridors and potential connections will help establish a more accessible and efficient transportation system for all users. This planning effort should consider factors such as safety, traffic patterns, accessibility, and opportunities to connect residential areas with commercial hubs, schools, and recreational facilities.

Action 4: Provide education to the public on where golf carts are allowed to be operated within the city as well as the rules for operation.
A public outreach campaign, including online resources, printed materials, and community workshops, can help ensure that residents understand designated golf cart routes, safety regulations, and legal requirements. Clear and consistent messaging will improve compliance and enhance the safe integration of golf carts into the city's transportation network.

Action 5: Research best practices to prepare an update to the development codes and regulations to facilitate the growth of EV charging infrastructure. Consider adopting EV-ready building codes, creating incentives, rebates, or expedited permitting processes.
By integrating EV-friendly policies into development regulations, the City can proactively support the transition to electric vehicles, reduce barriers to charging access, and encourage sustainable growth. These measures will help future-proof infrastructure, attract investment, and contribute to long-term environmental goals.

OBJECTIVE 2: FACILITATE SAFE AND WELL-PLANNED TRANSPORTATION INFRASTRUCTURE.

Action 1: Coordinate with TXDOT and other area partners to identify and evaluate opportunities for transportation demand management and smart city technologies to improve transportation efficiency.
Establishing strong partnerships with regional and state agencies will help Lago Vista to explore innovative solutions such as real-time traffic monitoring, adaptive signal control, and intelligent transportation systems. These efforts can enhance mobility, reduce congestion, and improve overall travel reliability for residents and visitors.

Action 2: Review and amend the development regulations to

DRAFT 02-04-2026

improve overall street connectivity through implementation of the thoroughfare plan.
Ensuring that new developments align with the city's thoroughfare plan will create a more cohesive and accessible street network. Updated regulations can require logical street layouts, reduced dead-ends, and better integration with existing and planned transportation corridors to enhance overall mobility. Examples of amendments could include: calculating the number of required access points based on the size of the neighborhood; requiring cross-access to adjacent neighborhoods; establishing a connectivity ratio; and/or shorter block lengths.

Action 3: Actively participate in regional transportation planning efforts, such as the CapMetro Transit Plan 2035, to promote funding and infrastructure improvements which benefit Lago Vista.
Engaging in these initiatives allows the city to advocate for transit expansion, secure funding for critical projects, and ensure that regional transportation strategies align with local needs. Collaboration with transit authorities and neighboring jurisdictions will help Lago Vista remain a key player in shaping future mobility solutions.

Action 4: Emphasize traffic safety on neighborhood streets by working with the police department to increase enforcement, collect data, and define metrics to measure increases in safety.
Strengthening enforcement of speed limits, stop sign compliance, and pedestrian right-of-way laws will help improve safety for all road users. Collecting and analyzing traffic data will allow the city to identify high-risk areas, implement targeted interventions, and track progress over time.

Action 5: Perform engineering level traffic safety analysis at the intersection of Dodge Trail at Diamond Trail and Boggy Ford Road east of Lincoln/Drapers Cove and determine appropriate design mitigations.
Establishing strong partnerships with regional and state agencies will help Lago Vista to explore innovative solutions such as real-time traffic monitoring, adaptive signal control, and intelligent transportation systems. These efforts can enhance mobility, reduce congestion, and improve overall travel reliability for residents and visitors.

Action 6: Identify projects for transit supportive infrastructure which could be funded by the Build Central Texas Fund through CapMetro.
Potential projects may include bus stop enhancements, pedestrian and bicycle access improvements, or park-and-ride facilities that increase transit accessibility. Securing funding for these projects will help expand mobility options for residents and support a more connected, sustainable transportation network.

DRAFT 02-04-2026

CITY SERVICES

Lago Vista will provide high-quality municipal services that prioritize efficiency, sustainability, reliability, and enhance the quality of life for residents.

Lago Vista is committed to ensuring that municipal services prioritize efficiency, sustainability, and reliability, therefore enhancing quality of life for residents. A fundamental aspect of this commitment is improving the city's resilience to natural hazards, prioritizing high quality infrastructure, and ensuring important natural resources are conserved for future generations.

Providing cost-effective and efficient infrastructure is essential for maintaining high-quality municipal services in Lago Vista. Strategic investments in roadways, water and wastewater systems, and energy-efficient public facilities will ensure the city's infrastructure meets the needs of a growing population while remaining financially sustainable. Through continuously assessing infrastructure performance and prioritizing proactive maintenance, Lago Vista will enhance long-term sustainability and provide residents with reliable, well-maintained public amenities. Water conservation initiatives, energy efficiency programs, and sustainable land-use planning will further reinforce the city's dedication to responsible growth.

CITY SERVICES

Objective CS.O1

Improve emergency preparedness and hazard mitigation

- CS.O1.A1 Develop and publish a Community Evacuation Plan.
- CS.O1.A2 Provide public education on wildfire and hazard mitigation.
- CS.O1.A3 Create and maintain a mass debris removal plan for emergency events.
- CS.O1.A4 Pursue development of a Community Wildfire Protection Plan.

Objective CS.O2

Strengthen infrastructure resilience

- CS.O2.A1 Evaluate and upgrade fire hydrants and fire flow capacity.
- CS.O2.A2 Install backup generators at critical facilities.
- CS.O2.A3 Incorporate resilience functions into municipal facilities planning.

Objective CS.O3

Ensure long-term utility and resource management

- CS.O3.A1 Implement Water and Wastewater Master Plan recommendations.
- CS.O3.A2 Develop a regional stormwater management strategy.
- CS.O3.A3 Update drought contingency and water conservation plans regularly.
- CS.O3.A4 Promote low-impact development and green infrastructure practices.

DRAFT 02-04-2026

OBJECTIVE 1: IMPROVE PUBLIC SAFETY, EMERGENCY PREPAREDNESS, AND HAZARD MITIGATION.

Action 1: Coordinate with the Emergency Services District to develop a Community Evacuation Plan and make maps of routes available to all residents.

A community evacuation plan will be critical for events which can be predicted, such as a winter storm. But in the event of an unpredictable hazard, like a wildfire, multiple, well-known evacuation routes will be critical to ensure if one is blocked people can escape.

Action 2: Coordinate public education presentations by Texas Forest Service and the Fire Department to help reduce fire hazard on private properties.

Conduct public outreach to educate citizens on the full range of hazards: educational information will be presented through digital signage on major thoroughfare, newsletters, and on the city website, to increase awareness of ways the public may protect themselves and mitigate homes and businesses from hazard events.

Action 3: Develop a mass debris removal plan in the event of a natural disaster.

Winter storm Uri, in February 2021, underscroed the importance of a mass debris removal plan as essential for protecting infrastructure, reducing repair costs, ensuring resident safety, and maintaining critical services during power outages caused by unforeseen events.

Action 4: Study fire hydrants in need of replacing and ensure fire flow levels are sufficient.

Evaluate and upgrade fire hydrants across the community to enhance water delivery efficiency during emergencies and reduce fire-related damage.

Action 5: Consider applying for grant to fund a Community Wildfire Protection Plan.

Apply for a grant through the US Forest Service to fund a Community Wildfire Protection Plan.

Action 6: Consider building a storm shelter or resilience hub as a part of the new city hall.

City Halls tend to function as a resource hub for residents, consider expanding any new City Hall to function as a resilience hub for information, supplies, and potentially shelter during severe weather events.

Action 7: Install backup generators at critical facilities.

The 2023 Travis County Hazard Mitigation Plan recommends installation at these locations: City Hall, WP #1 and WP#3 intakes, Public Works Facility which includes Water Plant #1, and at 3 booster stations. Examine if any other locations are important and pursue funding for improvements.

Action 8: Encourage the use of firewise landscaping and implement adequately spaced and located firebreaks in open space.

Strengthening enforcement of speed limits, stop sign compliance, and pedestrian right-of-way laws will help improve safety for all road users. Collecting and analyzing traffic data will allow the city to identify high-risk areas, implement targeted interventions, and track progress over time.

OBJECTIVE 2: PROVIDE COST EFFECTIVE AND EFFICIENT INFRASTRUCTURE.

Action 1: Complete all necessary recommendations from the 2024 Wastewater Master Plan and 2024 Water Master Plan.

Continue prioritizing infrastrcture updates as identified in the recently completed Water and Wastewater Master Plans.

DRAFT 02-04-2026

Action 2: Develop a comprehensive regional stormwater management plan.
Due largely to the topography of the area, residents have reported issues related to stormwater management. Consider a comprehensive look at issues and solutions for Lago Vista.

OBJECTIVE 3: IMPLEMENT POLICIES TO PROMOTE CONSERVATION OF IMPORTANT RESOURCES.

Action 1: Establish a plan to periodically review and update the Drought Contingency Plan. Consider increasing the penalties and enforcement of water conservation violations.
Ensure the Drought Contingency Plan is kept up to date with accurate triggers for water conservation stages and penalties which discourage violations.

Action 2: Contact Central Texas Water Coalition about hosting a "Water Day" for citizen education.
The Central Texas Water Coalition (CTWC) is a nonprofit organization advocating for policies that will preserve the Highland Lakes as irreplaceable natural resources that supply water for Central Texas' 2 million residents and provide an important regional economic engine for the state of Texas.

Action 3: Study the feasibility of an integrated stormwater management system to include low water use landscapes and bioswales, rain gardens and other stormwater management infrastructure in civic spaces, parks, open spaces, and streets.
An integrated stormwater management approach requires the incorporation of drainage systems into a multifunctional green infrastructure network. In areas where traditional gray infrastructure, such as underground pipes and culverts, is not feasible, this approach provides effective stormwater management solutions by utilizing above-ground systems to control runoff while enhancing environmental and community benefits.

Action 4: Create incentives, standards, and metrics for low impact design on city-owned property and in private developments, primarily encouraging stormwater management strategies, low water use, etc.
By promoting strategies like permeable surfaces, drought-tolerant landscaping, and rainwater harvesting, Lago Vista can reduce environmental impact while fostering a more resilient and attractive community.678

DRAFT 02-04-2026

CITY SERVICES

Lago Vista will manage the direction of growth and development through a thoughtfully planned land use pattern.

Lago Vista will preserve its unique identity as a scenic Hill Country city, defined by its breathtaking lake views, peaceful natural surroundings, and strong sense of community. As the city grows, it will prioritize development that enhances, rather than diminishes, these defining characteristics. However, encouraging development is key to sustaining Lago Vista's economic health and quality of life. Growth provides opportunities for new businesses, housing options, and public amenities, all of which contribute to a vibrant and financially stable city. Without strategic expansion, the city risks stagnation, leading to increased reliance on property taxes and fewer opportunities for economic diversification.

By planning for well-integrated residential, commercial, and recreational spaces, Lago Vista can attract investment while preserving the natural features and small-town atmosphere that residents cherish. To maintain the beloved small-town charm of Lago Vista, it is essential that new development is guided in a manner that aligns with community values and conserves both fiscal and natural resources. Preserving natural resources and encouraging placemaking requires a proactive approach to land use planning. Low-impact development practices, conservation-minded policies, and infrastructure investments that support walkability, sense of place, and connectivity will ensure that Lago Vista grows in a sustainable manner. Protecting scenic vistas, green spaces, and environmentally sensitive areas will maintain the city's appeal for both residents and visitors.

FUTURE LAND USE

Objective FLU.O1

Align growth with infrastructure and fiscal capacity

- FLU.O1.A1 Require annexation prior to extension of urban infrastructure into the ETJ.
- FLU.O1.A2 Coordinate land use decisions with infrastructure planning and service capacity.

Objective FLU.O2

Preserve open space and scenic resources

- FLU.O2.A1 Encourage conservation subdivision design where appropriate.
- FLU.O2.A2 Educate landowners on open space preservation tools and incentives.
- FLU.O2.A3 Explore funding mechanisms to support open space acquisition and preservation.

Objective FLU.O3

Improve predictability and consistency in development decisions

- FLU.O3.A1 Apply the Future Land Use Map consistently in policy and development review.
- FLU.O3.A2 Provide ongoing training for staff, boards, and elected officials.
- FLU.O3.A3 Conduct implementation workshops following plan adoption.

DRAFT 02-04-2026

OBJECTIVE 1: ENSURE LAGO VISTA CONTINUES TO PROSPER THROUGH MANAGED GROWTH AND THOUGHTFUL PLANNING.

Action 1: Adopt an infrastructure extension policy which requires annexation as a prerequisite to extend an urban level of infrastructure (e.g., water, wastewater, storm sewer) and services (e.g., city police, waste collection) to lands within the ETJ.

Laws surrounding annexation have drastically changed in recent years and with these changes, it is more important than ever that the City ensure the benefits of municipal infrastructure are reserved for properties within the city limits.

Action 2: Adopt and ensure the consistent application of the Future Land Use Map to guide the growth and development of Lago Vista.

Ensuring consistent application of the Future Land Use Map will create a predictable environment for developers, encouraging investment, and enforcing that development aligns with community goals and infrastructure capacity.

Action 3: Encourage the use of conservation subdivisions, where appropriate, to preserve open space.

Conservation subdivisions, one of the most common forms of conservation development, protect a significant portion of the development site as open space, while clustering small lot sizes on developed parcels at development densities specified by local development regulations. This type of development is better for the environment than standard large lot subdivision developments due to the natural space being less fragmented and more ecologically productive.

Action 4: Seek opportunities to preserve open space such as educating landowners of large parcels on the tax benefits of donating or preserving open space, updating the parkland dedication ordinance, issuing bonds to raise funds for protecting open space, or other such methods.

Cities have limited tools to preserving open space aside from buying land outright. Open space conservation was a high priority of the Council, Advisory Committee, and residents. Explore proactive solutions to preserve open space.

Action 5: Provide educational opportunities for staff, policymakers, and citizen board members on key issues, planning best practices, and cutting-edge tools to achieve success.

Conservation subdivisions, one of the most common forms of conservation development, protect a significant portion of the development site as open space, while clustering small lot sizes on developed parcels at development densities specified by local development regulations. This type of development is better for the environment than standard large lot subdivision developments due to the natural space being less fragmented and more ecologically productive.

Action 6: Consider coordinating an Implementation Bootcamp designed to educate City staff and policymakers on plan implementation and chart a successful path forward.

Following the adoption of this Plan, consider organizing an Implementation Bootcamp to prioritize next steps, budget appropriately for coming years, and ensure this Plan is successfully implemented.

DRAFT 02-04-2026

ECONOMIC DEVELOPMENT

Lago Vista will cultivate a thriving economy that supports diverse retail offerings, services, and employment opportunities.

Lago Vista will cultivate a thriving economy by strengthening efforts to attract businesses that meet the needs of residents and visitors. A strong local economy is important because it directly impacts the quality of life within a community by creating jobs, supporting local businesses, fostering a sense of community, and ensuring that money circulates within the area, leading to improved access to services and better infrastructure for residents; essentially, a thriving local economy contributes to a higher standard of living for the people who live there. This is achieved primarily through the identification and support of key industries that align with Lago Vista's strengths and potential to foster job creation and economic growth. Encouraging local tourism opportunities will play a key role in establishing Lago Vista as a getaway destination, driving economic growth and job creation. The city's natural beauty, recreational amenities, and proximity to Lake Travis provide a strong foundation for expanding tourism-related businesses such as lodging, dining, outdoor adventure experiences, and boutique attractions. Investing in marketing initiatives, events, and partnerships with regional tourism organizations will help raise Lago Vista's profile, drawing visitors who contribute to the local economy.

A balanced approach to economic development will ensure that Lago Vista's growth benefits both residents and businesses by providing employment opportunities and a diverse commercial landscape. Thoughtful planning and investment in infrastructure will support a mix of industries, from retail and hospitality to professional services and technology-driven enterprises.

ECONOMIC DEVELOPMENT/FUNDING

Objective EV.O1

Support business attraction and retention

- EV.O1.A1 Streamline development review and permitting processes.
- EV.O1.A2 Improve coordination between departments involved in development review.

Objective EV.O2

Ensure infrastructure readiness for economic activity

- EV.O2.A1 Align infrastructure investment with targeted commercial and employment areas.
- EV.O2.A2 Support redevelopment and reinvestment in existing commercial corridors.

DRAFT 02-04-2026

OBJECTIVE 1: STRENGTHEN LOCAL ECONOMIC DEVELOPMENT TO BRING BUSINESSES TO LAGO VISTA.

Action 1: Identify ways to streamline the development process to encourage economic development.

One of the most important non-financial tools is a city's ability to make development easy, predictable, and therefore a good investment. Continue to hold development meetings and create a development package for prospective businesses and developers.

Action 2: Consider implementing a tracking system to monitor air traffic and types of cargo at the airport.

A tracking system for air traffic and cargo types at the airport would provide valuable data to support economic development, ensure regulatory compliance, and enhance planning efforts for future airport operations.

Action 3: Consider establishing a Type B EDC to spur local economic development, fund community projects, and attract businesses.

A Type B EDC can bring significant economic benefits to a community by fostering job creation, funding infrastructure development, supporting parks, and supporting overall growth through strategic investments in various industries and projects. While the Type B corporation has a significant degree of autonomy, there are often requirements for public hearings and input regarding proposed projects, ensuring that the community has a voice in the decision-making process.

Action 4: Support efforts to establish forward thinking infrastructure systems and human resources, such as improved broadband for enhanced telework opportunities. Investing in forward-thinking infrastructure, such as improved broadband, would expand telework opportunities, attract remote professionals, and position Lago Vista as a competitive location for businesses that rely on digital connectivity.

Action 5: Partner with or maintain existing partnerships with local higher education centers, private and public schools, businesses, and other entities for workforce training programs.

Workforce training programs could help develop a pool of skilled workers in Lago Vista and encourage job growth. Strengthening partnerships with higher education institutions, schools, and businesses would help residents and high school students have access to the skills and certifications needed for gainful employment.

Action 6: Maintain and/or expand support for a business attraction, retention, and expansion (BRE) program which focuses on small-scale medical facilities such as urgent care, doctor's offices, dental offices, etc.

Business attraction, retention, and expansion programs should support the retention and expansion of existing businesses, support startups and entrepreneurs, enable existing businesses to grow and reach their potential, and support major anchors in expanding nationally and internationally with products and services. Data for each company should be tracked and maintained in an on-line system to maintain accountability and information that can help cross pollinate opportunities between organizations.

Action 7: Cultivate a predictable investment climate that attracts high-quality development practices (e.g., building form, architecture, and quality signage and landscaping) by protecting property investments from incompatible or ad hoc development decisions.

Establishing clear and consistent development standards for building form, architecture, signage, and landscaping will help maintain a cohesive and visually appealing community character.

DRAFT 02-04-2026

Update or create regulations such as a sign ordinance based on a unified vision for character or other similar regulations to encourage high quality development.

Action 8: Create a "buy local" campaign to support local Lago Vista businesses.
The Economic Development Department of the City can work with the Economic Development Advisory Committee or future Economic Development Corporation to engage local businesses and stakeholders to build support for the program and identify their needs.

OBJECTIVE 2: ENCOURAGE LOCAL TOURISM OPPORTUNITIES TO ESTABLISH LAGO VISTA AS A DESTINATION.

Action 1: Continue to work with the EDAC and support efforts to brand Lago Vista as "Gateway to Getaway."
Continue to collaborate with the Economic Development Advisory Committee (EDAC) and support efforts to brand Lago Vista as the "Gateway to Getaway" to strengthen the city's identity as a destination for relaxation, recreation, and quality living. This initiative can enhance economic development and attract visitors who seek a scenic retreat close to the lake.

Action 2: Leverage Lago Vista's "Platinum Scenic City" designation for grant applications, attracting quality developments, and fostering civic pride.
Lago Vista can leverage its Platinum Scenic City designation by incorporating it into grant applications, marketing materials, and zoning policies to attract funding and high-quality developments that align with scenic standards. Additionally, the city can foster civic pride by promoting the designation through public awareness campaigns, beautification initiatives, and tourism branding.

Action 3: Define target industries which complement the "Gateway to Getaway" brand such as wineries, health and wellness spas, music venues, hotels, resorts, etc.
A Type B EDC can bring significant economic benefits to a community by fostering job creation, funding infrastructure development, supporting parks, and supporting overall growth through strategic investments in various industries and projects. While the Type B corporation has a significant degree of autonomy, there are often requirements for public hearings and input regarding proposed projects, ensuring that the community has a voice in the decision-making process.

Action 4: Explore incentives to attract target industries.
Once target industries are defined, explore incentives to attract chosen industries and boost the "Gateway to Getaway" brand. Tailored incentives, such as tax abatements or infrastructure support, can make the city more competitive in attracting high-value developments.

Action 5: Identify how local Hotel Occupancy Tax (HOT) funds could be allocated to other eligible uses under state law to expand and diversify tourism offerings.
A hotel occupancy tax (HOT) is a tax charged to guests renting a room or space in a hotel costing 15 dollars or more each day. Uses of local HOT revenue are limited and in general may only be used to promote tourism and the convention and hotel industries. However, categories of HOT-funded projects can include encouragement, promotion, improvement, and application of the arts; enhancement and upgrading of existing sports facilities or fields; constructing, improving, enlarging, equipping, repairing, operating, and maintaining a coliseum or multi-use facility; etc.

DRAFT 02-04-2026

Action 6: Review requirements to become a DarkSky International community before applying.

Step 1: Review International Dark Sky Community Program Guidelines and Self-Checklist.

Step 2: Conduct a lighting inventory to determine scope of cost and effort to retrofit all publicly owned lighting.

Step 3: Gather evidence of public support, education efforts, and obtain a nomination from a DarkSky member.

Step 4: Submit application.

DRAFT 02-04-2026

PARKS AND RECREATION

Lago Vista will improve its park system to provide spaces for people to play, gather, and enjoy nature.

The City of Lago Vista currently has a small parks system but is poised to incrementally expand its offerings to better serve local residents. As the City experiences gradual population changes and shifting recreational trends, thoughtful planning is essential to ensure that parks and programs keep pace with community needs. Lago Vista aims to create family-friendly spaces where neighbors can connect, stay active, and immerse themselves in the natural beauty of the Texas Hil Country.

At the core of this vision is a commitment to improving amenities that promote personal well-being, reinforce active and healthy lifestyles, and uphold Lago Vista's collective sense of pride. Prioritizing accessibility and responsiveness, the City intends to maintain transparent and sustainable practices, ensuring that each improvement reflects responsible stewardship of public resources and environmental assets. Whether updating playgrounds, maintaining trails, or refining service standards, each effort will be guided by a careful balance of community aspirations and incremental planning.

It is important to recognize the power of unique experiences to draw visitors and build vibrant community focal points. The City can leverage the area's natural setting and lake-side appeal to strengthen recreational tourism opportunities while preserving its intimate, welcoming character. Through focused objectives and actions, the City will chart a future in which parks evolve alongside residents' needs—enhancing local quality of life and celebrating the shared spaces that bring the community together.

PARKS AND RECREATION

Objective PR.O1

Expand and enhance parks and open space

- PR.O1.A1 Improve access to existing parks and recreational facilities.
- PR.O1.A2 Expand trail connections and nature-based recreation opportunities.
- PR.O1.A3 Protect environmentally sensitive lands and scenic areas.

Objective PR.O2

Integrate parks into community life

- PR.O2.A1 Coordinate park planning with land use and transportation decisions.
- PR.O2.A2 Support programming that encourages outdoor activity and community interaction.

DRAFT 02-04-2026

OBJECTIVE 1: IMPROVE PARK AND RECREATION OPPORTUNITIES THAT ENHANCE PERSONAL WELL-BEING, PROMOTE ACTIVE LIFESTYLES, AND FOSTER PUBLIC PRIDE BY MAINTAINING AMENITIES AND PROGRAMS THAT CATER TO DIVERSE INTERESTS, AGES AND ABILITIES.

Action 1: Develop strategic partnerships and programs with volunteer groups or local nonprofits to encourage and facilitate volunteer park maintenance and clean up groups.

Implementing a formal structure (e.g., an adopt-a-park program or scheduled volunteer days) creates consistent opportunities for residents to invest in their local parks and the City can more efficiently address routine upkeep, beautification projects, and minor facility improvements.

Action 2: Maintain and strengthen the existing partnership with LVISD to maximize shared use opportunities such as shared maintenance costs, shared use facilities such as playgrounds or athletic fields, and general planning for facilities.

Strengthening the partnership with the LVISD is a crucial step in maximizing shared resources and creating more recreational opportunities for the entire community. By working together on initiatives such as joint maintenance of facilities, co-sponsorship of sports leagues or events, and shared use of playgrounds, athletic fields, and other recreational assets, both entities can reduce costs and provide more diverse programming.

Action 3: Publish a list of volunteer and donation opportunities on the City's website to help improve City parks (e.g., Maintenance cost mitigation (adopt-a-park, adopt-a-trail) and create a process to track volunteer hours, in-kind, and donations.

By advertising initiatives like adopt-a-park or adopt-a-trail, residents, local businesses, and civic groups can directly contribute time, resources, or financial support to beautify and maintain public spaces. In tandem, establishing a process to track volunteer hours, in-kind contributions, and monetary donations helps the City measure community impact and acknowledge contributors.

Action 4: Increase shade coverage in City-owned parks through tree planting programs or installation of shade structures.

Introducing more natural and constructed shade elements in parks can provide cooler, more comfortable environments for park users to exercise, socialize, and relax—especially in hotter parts of the year. Shade structures, such as canopies or shade sails should be tailored to specific amenities like playgrounds or seating areas, increasing usability of these facilities.

Action 5: Explore updates and improvements to Sunset Park.

Consider tournament ready ball fields, trails, dog park, concert space, disc golf course or other regional park amenities.

OBJECTIVE 2: ESTABLISH STANDARDS AND POLICIES FOR THE OPERATIONS AND MAINTENANCE OF CITY PARKS AND PROGRAMS TO ENSURE TRANSPARENCY, RESPONSIVENESS TO COMMUNITY NEEDS, ENVIRONMENTAL AND FISCALLY SUSTAINABLE PRACTICES, AND OPERATIONAL EFFICIENCY.

Action 1: Establish a clear and compelling mission and vision statement for the Parks and Recreation Department.

A vision statement for the Parks and Recreation Department creates a mission that guides operational decisions, from routine maintenance protocols to long-term program development. By establishing a set of core values staff can align everyday actions and resource allocation with community aspirations.

DRAFT 02-04-2026

Action 2: Consider establishing a formal Parks and Recreation Commission or Board.

Consider converting the current Parks and Recreation Advisory Committee (PRAC) into an elected or volunteer-run Commission or Board to help to grant the PRAC more authority and formalize their dedication and commitment to improving parks and recreation. This Commission or Board can evaluate maintenance priorities, new facility proposals, and programming initiatives to help make park related decisions for the City and provide public oversight over the Lago Vista park system.

Action 3: Review and strengthen requirements for parkland and trail dedication from new development.

A parkland dedication ordinance is a vital tool for ensuring that there is a mechanism to preserve and enhance accessible green spaces for current and future residents. This ordinance requires new residential developments to set aside land or pay fees specifically allocated toward parks. Such an ordinance not only balances urban growth with environmental stewardship but also supports the city's long-term vision of cultivating parkland for current and future generations. Parkland dedication ordinances may be structured to require new developments to include land for public parkland and/or trails, options to accept fees in lieu of land, and consider development fees that would pay for amenities in addition to land. While less common, several cities in Texas also have trail dedication ordinances, which require development to build trails if identified on a Trails Master Plan. Lago Vista's current parkland dedication ordinance requires dedication to the City of one acre of parkland for every 30 dwelling units or the developer may choose to pay a per unit fee instead of dedicating land. Due to increased interest in development and public demand for more parks, it could be time for a review to ensure the ordinance is meeting the community vision for parkland. While the current ordinance is strong, the City could consider adding a park development fee or incorporating trail dedication requirements.

Action 4: Prioritize drought tolerant native plants in landscape design and when restoring degraded areas within the park system.

Using plant species adapted to the region's climate minimizes the need for fertilizers or chemical treatments, thereby lowering ongoing expenses and environmental impacts. Furthermore, native plants often provide essential habitats for local pollinators and wildlife, reinforcing the city's commitment to biodiversity.

Action 5: Ensure that all future amenities in City-owned parks have ADA-compliant paths, restrooms, and facilities.

By incorporating accessible design principles and ADA standards into critical elements such as paved walkways, restrooms, parking, and seating—park projects avoid the need for costly retrofits down the line. This inclusive approach also has a broad positive impact, helping seniors and families with strollers benefit from smooth pathways, while increased connectivity and wayfinding make it easier for all visitors to navigate and engage with park features.

Action 6: Seek to add revenue-generating enhancements in parks such as pavilions, event-focused facilities, and pay-to-use amenities within the parks.

Consider implementing a fee structure for park amenities which need reservations or rental fees that introduces a distinction between resident and non-resident rates.

Action 7: Develop a maintenance plan for the city-owned parks.

Establishing a comprehensive maintenance plan is crucial for maintaining consistent quality, cleanliness, and safety standards across all city-owned parks. This Plan should outline scheduled tasks and responsibilities for daily, weekly, and seasonal upkeep (e.g., mowing, landscaping, waste collection, repairs, and

DRAFT 02-04-2026

equipment servicing).

OBJECTIVE 3: CREATE UNIQUE EXPERIENCES IN LAGO VISTA FOR THE PURPOSES OF RECREATIONAL TOURISM AND CREATING COMMUNITY FOCAL POINTS.

Action 1: Develop a concept plan for the undeveloped parkland area near Ann Murrow 4th of July Circle.

The Parks and Recreation Advisory Committee has identified this potential park as a priority project and supports the development of a small trail, playscape, benches, tables, a gazebo, and potential butterfly garden.

Action 2: Develop a community garden program that will determine installation and maintenance efforts and establish a local board or volunteer group to maintain these types of facilities.

Developing a community garden program can be a dynamic way for Lago Vista to create unique opportunities and community gathering spaces while promoting local sustainability. Consider a demonstration garden featuring hands-on programs and agricultural education, while also hosting special events, workshops, or school partnerships.

Action 3: Consider developing a city-wide Trails Master Plan.

This Plan would need to evaluate the developability of the city-owned parcels and "strips" of land for future parks or trails, seek to expand trail investments throughout the community using existing right-of way, easements, or targeted acquisition locations, and investigate the feasibility of including mountain bike trails in Lago Vista.

Action 4: Evaluate the feasibility and location for a future skatepark that incorporates diverse features and skill levels to attract users of all ages and skill-levels.

Desire for a skatepark was frequently mentioned by the public during this planning process with several members of the public suggesting it be located near the police station.

Action 5: Evaluate the feasibility of developing a park on the city-owned property located in between Canyon Drive, Lago Vista Way and Bonanza.

Commonly referred to as the Bonanza parcel, this parcel has quite a steep slope and would need to be evaluated by a landscape architect to determine developability.

Action 6: Consider introducing City operated recreational programming to provide recreational programming and activities to residents of all ages.

As Lago Vista continues to grow, consider providing public recreational programming, particularly if the City builds an indoor recreation center.

Action 7: Consider possible opportunities to create a city-owned park with lake access.

DRAFT 02-04-2026

DRAFT 02-04-2026

PARK ENHANCEMENTS

This section presents actions that the Parks and Recreation Department can focus on at each specific parks. The following identified improvements may be integrated into a more substantial Capital Improvement Project earmarked for that park, while others could be placed into a maintenance plan or replacement schedule, as appropriate.

Upper Bar-K Park / Sportsplex:

- Repair splash pad and enhance surrounding seating area.
- Repair foundation and nets of both tennis courts.
- Repair existing sidewalks and replace crushed granite park pathways and trails with concrete sidewalks throughout the park in order better enhance access for all types of park users.
- Conduct annual turf maintenance on sports fields (aeration, irrigation, seeding, fertilization).
- Construct a large pavilion near the baseball field for team gatherings.
- Renovate and modernize the ballfield clubhouse and bathrooms.
- Remove existing play structure and replace with new playground equipment.
- Replace pool tables, chairs, and loungers.
- Consider adding a concession stand.

Bowden Point:

- Construct screening and fencing around the park for additional safety and noise reduction.
- Install a small, looped trail that provides access to the art and flower beds in the park.
- Re-purpose and improve monument signage at the corner of Boggy Ford and Highland Lakes Blvd.
- Add additional parking.
- Remove fencing and screening recommendation.

Lago Vista Golf Course

- Irrigation system will be replaced as part of the effluent disposal system plans, which will improve overall course conditions with proper watering.
- Continued capital improvements should be made to the golf course (such as improved greens, larger tee boxes, improved cart paths, bunkers, practice area, etc.).
- Enhance and strengthen safety features, such as netting, around pickleball courts until either the location of the pickleball courts or driving range can be addressed.
- Renovate and modernize the clubhouse to make it a community hub.
- Implement fire prevention measures for the clubhouse and golf cart storage.

Sunset Park:

- Construct trails connecting Sunset Park to the Balcones Canyonlands.
- Pave and stripe all parking areas.
- Install paved sidewalks and park pathways to and from different park amenities and parking areas.
- Consider creating a landscaping / planting plan for the entire park.
- Construct pavilions with seating areas for more public gathering opportunities.
- Construct a Bankshot (equipment is available; requires a concrete platform and fenced area).
- Construct shade covers over baseball and softball bleachers.
- Install new nets for the soccer goals and a volleyball net.
- Construct the second entrance to Sunset Park on FM 1431.
- Improve restrooms, signage, and add water fountains

Veterans Memorial Park

- Repair leaning eagle statue.
- Construct a park sign near Dawn Drive or the parking areas.
- Enhance coverage and update overall lighting.

- Partner with the KLVB organization to regularly maintain and update the landscaping beds.
- Annually clean and maintain the remembrance bricks and rock pillars.
- Add additional benches and seating areas.

DRAFT 02-04-2026

IMPLEMENTATION AND GOVERNANCE

XXXXX.....X
XXXXX.....X
XXXXX.....X

The success of this Plan will be measured through the implementation actions. The planning process ensures that future development can occur in an organized and coordinated fashion. The future of Lago Vista will be shaped by policies and recommendations laid out in this Plan. This Plan's directives will often require interpretation, adaptability, and flexibility. The recommendations should be thoughtfully approached and evaluated based on compliance and implementation with the goals and initiatives set forth within this Plan.

PARTNERING FOR SUCCESS

Implementing the community's vision will take coordinated effort from various community leaders, including individual citizens, appointed and elected officials, and outside agencies and entities. Increasingly, jurisdictions are acknowledging that ultimate success of a comprehensive plan involves a combined effort from City and non-City partners. The City has a responsibility to partner with all local, state, and federal public and private partners that can be of assistance in bettering Lago Vista now and in the future. At a minimum, this includes:

- Lago Vista elected and appointed officials;
- City Administration and staff;
- Lago Vista Property Owners Association;
- Travis County;
- Texas Department of Transportation;
- North Lake Travis Chamber of Commerce;
- Lago Vista Independent School District (LVISD);
- Lower Colorado River Authority (LCRA); and
- Local community groups and organizations.

ROLES AND RESPONSIBILITIES

City representatives, City staff, and dedicated citizens make up the "champions" of this Plan. Their roles are crucial to the effective implementation and follow through of this Plan. City Council, City staff, and the Planning and Zoning Commission should assess all decision-making and recommendations for consistency with this Plan as outlined below.

CITY STAFF

- Managing day-to-day implementation of the Plan, including ongoing coordination
- Supporting and carrying out capital improvement planning efforts
- Managing drafting of new or amended land development regulations
- Conducting studies and developing additional plans
- Reviewing development, zoning, and other land use applications for consistency with this Plan

PLANNING & ZONING COMMISSION

- Making recommendations related to development and redevelopment
- Ensuring that development is consistent with the vision of this Plan
- Preparing a periodic progress report with the help of City staff to review goals to evaluate consistency with the plan's vision

CITY COUNCIL

- Adopting amendments to the Plan by ordinance
- Adopting new or amended land development regulations to implement this Plan

Approving inter-local agreements

- Establishing the overall action priorities and timeframes for initiation and completion
- Considering and approving funding commitments
- Approving projects, activities and budgets in a manner consistent with this Plan

DRAFT 02-04-2026

MONITORING AND BENCHMARKING

The City of Lago Vista will monitor the plan implementation and the corresponding effects on the community environment, community prosperity, and community livability. Creating a benchmarking and monitoring system will keep a record of accomplishments and measure the successes within the City. It will also reveal any opportunities that arise to modify and amend the Plan.

Realizing the communities vision involves actively and deliberately working toward the action steps in the implementation table. This Plan created goals, objectives and recommendations to help guide the growth and development of the City. This chapter will focus on the implementation table, providing guidance and accountability for the City and other parties.

As part of the ongoing implementation process, benchmarking and monitoring should take place regularly and be summarized in a succinct report. These regular reports should include a status update on implementation, important actions and accomplishments, and identification and recommendation of needed actions and programs to be created and implemented in the future. An annual report of this Plan report should be presented at a work session and regular session of the City Council.

UNDERSTANDING THE IMPLEMENTATION TABLE

The Implementation Table, on the next page, provides a condensed summary of recommendations for this Plan showcasing the goals, objectives, and recommendations together in a table format to highlight the timeframe, involved entities, and action type(s) for each of the actions. In many cases, there are partner organizations, entities, or stakeholders with whom collaboration and cooperation are essential to successfully implement the recommended strategies. These partners play a critical role in contributing resources, expertise, or support to achieve the Plan's goals.

The action types could be one or more of the following:

- Operations (O): New or changed programs, staffing, or operational procedures.
- Policy (P): Procedures or policies that are used to guide the City decision-making.
- Investment (I): Allocating financial resources to fund specific projects, initiatives, or infrastructure developments.
- Study (S): More in-depth research, analysis, or assessment needed to gather information or data essential for informed decision-making.
- Regulation (R): Council adopted regulations used to guide the City.

In addition to the action types for the plan, there are also timelines assigned to each action. The actions are allocated among four levels of prioritization and reflect the action's priority as determined by the comprehensive planning process. The four categories of timeframe are:

- Short-Term – Represents the recommendations that should be initiated in the next 1-3 years following adoption. These strategies have been determined to be feasible for implementation in the near term.
- Mid-Term – Represents the strategies that should be initiated in the next 4-6 years following plan adoption. These strategies require more complex planning and budgeting decisions.
- Long-Term – Represents the strategies that should be initiated in the next 7-10 years following adoption. These items support long-term visionary items and require significant planning and funding resources.
- Ongoing – Represents recommendations that do not have a specific timeframe and should be implemented over time or should be continually implemented on an established schedule.

DRAFT 02-04-2026

	ACTIONS	ACTION TYPE	TIMEFRAME (YEARS)			INVOLVED DEPARTMENTS (AND PARTNERING ENTITIES)
			0-2	3-5	6-10	
GOAL 1 - Community Character: Lago Vista will preserve its unique identity as a scenic, hill country city with a close-knit community, beautiful lake views, and peaceful nature.						
Objective 1: Strive to strengthen neighborhoods as places of quality, community, and livability.						
1.1.1	Develop an information library of housing assistance resources for residents either online or at City offices and keep it up to date.	Operational	X	X	X	DS, CM
1.1.2	Incentivize the development of senior housing through expedited permitting, fee reduction or waivers, or public-private partnerships.	Investment	X			DS, CM
1.1.3	Encourage the development of strategically located higher density residential developments using the future land use plan and location criteria developed by the Advisory Committee.	Policy	X	X	X	DS, CC, P&Z
1.1.4	Strengthen the tree preservation ordinance through education or some other means.	Operational	X			DS, CM
Objective 2: Expand or build municipal facilities to create places to gather as a community.						
1.2.1	Construct an indoor community center in the municipal complex on Dawn Drive that serves as a central hub for residents, offering versatile spaces for fitness, sports, recreation, gatherings, senior and youth programming, and community gathering.	Investment		X		DS, CM, P&Z, P&R
1.2.2	Build a new City Hall in the municipal complex on Dawn Drive and anchor it as the civic hub of the community.	Investment	X			DC, CC, P&Z, CM

DRAFT 02-04-2026

	ACTIONS	ACTION TYPE	TIMEFRAME (YEARS)			INVOLVED DEPARTMENTS (AND PARTNERING ENTITIES)
			0-2	3-5	6-10	
1.2.3	Expand the library and upgrade its amenities.	Investment	X			PL, CC, CM, LAB
1.2.4	Continue to adequately staff the library and hire a Children's Librarian.	Operational	X	X	X	PL, LAB
1.2.5	Offer senior computer safety courses and other programming for seniors at the library or future indoor community center.	Operational	X	X	X	PL, P&R
1.2.6	Support opportunities for year-round programming, special event activities that reinforce community perceptions of sense of community and small-town character.	Operational	X	X	X	CC, P&R, CM, PRAC
1.2.7	Explore a financing district or mechanism for public improvements to spur investment on Dawn Drive.	Study	X			DS, CM
Objective 3: Bolster civic engagement to foster community trust and pride.						
1.3.1	Hire or contract services for a grant writer to assist the City in finding and applying for grants to fund plan implementation.	Operational	X			CM, CC
1.3.2	Explore the possibility for cross municipal partnerships between Cedar Park, Jonestown, or other communities for regional trails, transportation, open space preservation, or other such partnerships.	Study		X		CM, DS, P&R, CC, PRAC
1.3.3	Enhance the City's community outreach and engagement strategies to foster dialogue, build community trust, and encourage informed and civil civic participation.	Operational	X	X	X	CM, DS

CM - City Manager
DS - Development Services
PL - Public Library
PW - Public Works
ED - Economic Development
EDAC - ED Advisory Committee
PRAC - Parks and Recreation Advisory Committee
AAB - Airport Advisory Committee
PD - Police Department
LAB - Library Advisory Board
GCAC - Golf Course Advisory Committee
P&Z - Planning and Zoning

DRAFT 02-04-2026

	ACTIONS	ACTION TYPE	TIMEFRAME (YEARS)			INVOLVED DEPARTMENTS (AND PARTNERING ENTITIES)
			0-2	3-5	6-10	
GOAL 2 - Mobility: Lago Vista will preserve its unique identity as a scenic, hill country city with a close-knit community, beautiful lake views, and peaceful nature.						
Objective 1: Support improvements to multi-modal transportation throughout Lago Vista.						
2.1.1	Amend the zoning and subdivision ordinances to require new residential developments to connect new networks of sidewalks, paths and/or bike routes within neighborhoods to nearby collectors and arterial streets or adjacent developments.	Regulation		X		DS, CC, CM, P&Z, PW
2.1.2	Consider implementing enhanced development standards that apply to PDDs to encourage higher quality, pedestrian oriented development.	Regulation		X		DS, CC, CM, P&Z, PW
2.1.3	During the next update to the Transportation Master Plan or as part of a Trails Master Plan, identify bicycle or golf cart routes to create a multi-modal network.	Study			X	DS, CM, CC, P&Z
2.1.4	Provide education to the public on where golf carts are allowed to be operated within the City as well as the rules for operation.	Operational	X	X	X	CM, DS, PD
2.1.5	Research best practices to prepare an update to the development codes and regulations to facilitate the growth of EV charging infrastructure. Consider adopting EV-ready building codes, creating incentives, rebates, or expedited permitting processes.	Study		X		DS

DRAFT 02-04-2026

	ACTIONS	ACTION TYPE	TIMEFRAME (YEARS)			INVOLVED DEPARTMENTS (AND PARTNERING ENTITIES)
			0-2	3-5	6-10	
Objective 2: Facilitate safe and well-planned transportation infrastructure.						
2.2.1	Coordinate with TXDOT and other area partners to identify and evaluate opportunities for transportation demand management and smart city technologies to improve transportation efficiency.	Operational	X	X	X	DS, CM, PW, TxDOT
2.2.2	Review and amend the development regulations to improve overall street connectivity through implementation of the thoroughfare plan.	Regulation		X		DS, CM, PW, CC
2.2.3	Actively participate in regional transportation planning efforts, such as the CapMetro Transit Plan 2035, to promote funding and infrastructure improvements which benefit Lago Vista.	Operational	X			PW, DS, CM, CapMetro
2.2.4	Emphasize traffic safety on neighborhood streets by working with the police department to increase enforcement, collect data, and define metrics to measure increases in safety.	Policy	X			DS, CM, PW, PD
2.2.5	Perform engineering level traffic safety analysis at the intersection of Dodge Trail at Diamond Trail and Boggy Ford Road east of Lincoln/ Drapers Cove and determine appropriate design mitigations.	Study		X		DS, CM, PW, PD
2.2.6	Identify projects for transit supportive infrastructure which could be funded by the Build Central Texas Fund through CapMetro.	Study	X			PS, CM, PW, CapMetro

DRAFT 02-04-2026

CM - City Manager
DS - Development Services
PL - Public Library
PW - Public Works
ED - Economic Development
EDAC - ED Advisory Committee
PRAC - Parks and Recreation Advisory Committee
AAB - Airport Advisory Committee
PD - Police Department
LAB - Library Advisory Board
GCAC - Golf Course Advisory Committee
P&Z - Planning and Zoning

	ACTIONS	ACTION TYPE	TIMEFRAME (YEARS)			INVOLVED DEPARTMENTS (AND PARTNERING ENTITIES)
			0-2	3-5	6-10	
GOAL 3 - City Services: Lago Vista will provide high-quality municipal services that prioritize efficiency, sustainability, reliability, and enhance the quality of life for residents.						
Objective 1: Improve Public Safety, Emergency Preparedness, and Hazard Mitigation.						
3.1.1	Coordinate with the Emergency Services District (ESD) to develop a Community Evacuation Plan and make maps of routes available to all residents.	Study		X		ESD, DS, PW, CM
3.1.2	Coordinate public education presentations by Texas Forest Service and the Fire Department to help reduce fire hazard on private properties.	Operational	X			Texas Forest Service, FD, DS, CM
3.1.3	Develop a mass debris removal plan in the event of a natural disaster.	Study		X		PW, CM
3.1.4	Study fire hydrants in need of replacing and ensure fire flow levels are sufficient.	Study		X		FD, PW, CM
3.1.5	Consider applying for grant to fund a Community Wildfire Protection Plan.	Study		X		DS, CC, CM
3.1.6	Consider building a storm shelter or resilience hub as a part of the new city hall.	Study	X			DS, CC, CM, PW, PD, FD
3.1.7	Install backup generators at critical facilities.	Investment	X			CC, PW, CM
3.1.8	Encourage the use of firewise landscaping and implement adequately spaced and located firebreaks in open space.	Policy	X			DS, CC, CM, PW, PRAC, P&R

DRAFT 02-04-2026

	ACTIONS	ACTION TYPE	TIMEFRAME (YEARS)			INVOLVED DEPARTMENTS (AND PARTNERING ENTITIES)
			0-2	3-5	6-10	
Objective 2: Provide cost effective and efficient infrastructure.						
3.2.1	Complete all necessary recommendations from the 2024 Wastewater Master Plan and 2024 Water Master Plan.	Investment	X	X	X	PW, CC, CM
3.2.2	Develop a comprehensive regional stormwater management plan.	Study			X	PW, CC, CM
Objective 3: Implement policies to promote conservation of important resources.						
3.3.1	Establish a plan to periodically review and update the Drought Contingency Plan. Consider increasing the penalties and enforcement of water conservation violations.	Regulation		X		DS, PW, FD, CM, CC
3.3.2	Contact Central Texas Water Coalition about hosting a "Water Day" for citizen education.	Operational	X	X	X	Central Texas Water Coalition, DS, FD, CM
3.3.3	Study the feasibility of an integrated stormwater management system to include low water use landscapes and bioswales, rain gardens and other stormwater management infrastructure in civic spaces, parks, open spaces, and streets.	Study	X			PW, DS, CM, P&Z
3.3.4	Create incentives, standards, and metrics for low impact design on city-owned property and in private developments, primarily encouraging stormwater management strategies, low water use, etc.	Regulation		X		CC, DS, CM, PW, P&Z

CM - City Manager
DS - Development Services
PL - Public Library
PW - Public Works
ED - Economic Development
EDAC - ED Advisory Committee
PRAC - Parks and Recreation Advisory Committee
AAB - Airport Advisory Committee
PD - Police Department
LAB - Library Advisory Board
GCAC - Golf Course Advisory Committee
P&Z - Planning and Zoning

DRAFT 02-04-2026

	ACTIONS	ACTION TYPE	TIMEFRAME (YEARS)			INVOLVED DEPARTMENTS (AND PARTNERING ENTITIES)
			0-2	3-5	6-10	
GOAL 4 - Future Land USe: Lago Vista will manage the direction of growth and development through a thoughtfully planned land use pattern.						
Objective 1: Ensure Lago Vista continues to prosper through managed growth and thoughtful planning.						
4.1.1	Adopt an infrastructure extension policy which requires annexation as a prerequisite to extend an urban level of infrastructure (e.g., water, wastewater, storm sewer) and services (e.g., city police, waste collection) to lands within the ETJ.	Regulation			X	CC, DS, CM, PW, P&Z
4.1.2	Adopt and ensure the consistent application of the Future Land Use Map to guide the growth and development of Lago Vista.	Regulation		X		CC, DS, CM, P&Z
4.1.3	Encourage the use of conservation subdivisions, where appropriate, to preserve open space.	Policy	X	X	X	CC, DS, CM, P&Z
4.1.4	Seek opportunities to preserve open space such as educating landowners of large parcels on the tax benefits of donating or preserving open space, updating the parkland dedication ordinance, issuing bonds to raise funds for protecting open space, or other such methods.	Policy	X	X	X	CC, DS, CM, P&Z, PR, ED, EDAC
4.1.5	Provide educational opportunities for staff, policymakers, and citizen board members on key issues, planning best practices, and cutting-edge tools to achieve success.	Operational	X	X	X	DS, CC, CM, P&Z
4.1.6	Consider coordinating an Implementation Bootcamp designed to educate City staff and policymakers on plan implementation and chart a successful path forward.	Operational	X	X	X	DS, CC, CM, P&Z

DRAFT 02-04-2026

ACTIONS		ACTION TYPE	TIMEFRAME (YEARS)			INVOLVED DEPARTMENTS (AND PARTNERING ENTITIES)
			0-2	3-5	6-10	
GOAL 5 - Economic Development: Lago Vista will cultivate a thriving economy that supports diverse retail offerings, services, and employment opportunities.						
Objective 1: Strengthen local economic development to bring businesses to Lago Vista.						
5.1.1	Identify ways to streamline the development process to encourage economic development.	Operational	X			DS, ED, EDAC
5.1.2	Consider implementing a tracking system to monitor air traffic and types of cargo at the airport.	Operational		X		DS, AAB
5.1.3	Consider establishing a Type B EDC to spur local economic development, fund community projects, and attract businesses.	Study	X			ED, EDAC, CC
5.1.4	Support efforts to establish forward thinking infrastructure systems and human resources, such as improved broadband for enhanced telework opportunities.	Policy	X	X	X	DS, PW, CM
5.1.5	Partner with or maintain existing partnerships with local higher education centers, private and public schools, businesses, and other entities for workforce training programs.	Operational	X	X	X	DS, ED, EDAC, CM
5.1.6	Maintain and/or expand support for a business attraction, retention, and expansion (BRE) program which focuses on small-scale medical facilities such as urgent care, doctor's offices, dental offices, etc.	Operational	X	X	X	ED, EDAC, CM, CC
5.1.7	Cultivate a predictable investment climate that attracts high-quality development practices (e.g., building form, architecture, and quality signage and landscaping) by protecting property investments from incompatible or ad hoc development decisions.	Regulation	X	X	X	CC, P&Z, CM, DS

DRAFT 02-04-2026

	ACTIONS	ACTION TYPE	TIMEFRAME (YEARS)			INVOLVED DEPARTMENTS (AND PARTNERING ENTITIES)
			0-2	3-5	6-10	
5.1.8	Create a "buy local" campaign to support local Lago Vista businesses.	Operational	X			ED, EDAC, CM
Objective 2: Encourage local tourism opportunities to establish Lago Vista as a destination.						
5.2.1	Continue to work with the EDAC and support efforts to brand Lago Vista as "Gateway to Getaway."	Operational	X			ED, EDAC, CM
5.2.2	Leverage Lago Vista's "Platinum Scenic City" designation for grant applications, attracting quality developments, and fostering civic pride.	Operational	X	X	X	ED, EDAC, CM
5.2.3	Define target industries which complement the "Gateway to Getaway" brand such as wineries, health and wellness spas, music venues, hotels, resorts, etc.	Study	X			ED, EDAC, CM
5.2.4	Explore incentives to attract target industries.	Study	X			ED, EDAC, CM, DS
5.2.5	Identify how local Hotel Occupancy Tax (HOT) funds could be allocated to other eligible uses under state law to expand and diversify tourism offerings.	Study	X			ED, EDAC, CM, DS
5.2.6	Review requirements to become a DarkSky International community before applying.	Study	X			ED, EDAC, CM, DS

DRAFT 02-04-2026

	ACTIONS	ACTION TYPE	TIMEFRAME (YEARS)			INVOLVED DEPARTMENTS (AND PARTNERING ENTITIES)
			0-2	3-5	6-10	
GOAL 6 - Parks and recreation: Lago Vista will improve its park system to provide spaces for people to play, gather, and enjoy nature.						
Objective 1: Improve park and recreation opportunities that enhance personal well-being, promote active lifestyles, and foster public pride by maintaining amenities and programs that cater to diverse interests, ages and abilities.						
6.1.1	Develop strategic partnerships and programs with volunteer groups or local nonprofits to encourage and facilitate volunteer park maintenance and clean up groups.	Operational	X	X	X	PR, PRAC, CM, GCAC
6.1.2	Maintain and strengthen the existing partnership with LVISD to maximize shared use opportunities such as shared maintenance costs, shared use facilities such as playgrounds or athletic fields, and general planning for facilities.	Operational	X	X	X	LVISD, PR, PRAC, CM, PW
6.1.3	Publish a list of volunteer and donation opportunities on the City's website to help improve City parks (e.g., Maintenance cost mitigation (adopt-a-park, adopt-a-trail) and create a process to track volunteer hours, in-kind, and donations.	Operational	X	X	X	PR, CM, PRAC
6.1.4	Increase shade coverage in City-owned parks through tree planting programs or installation of shade structures.	Investment	X			PR, CC, CM, PRAC
6.1.5	Update the phase two concept plan for Sunset Park. Consider tournament ready ball fields, trails, dog park, concert space, disc golf course or other regional park amenities.	Study			X	PR, DS, CC, CM, PRAC

DRAFT 02-04-2026

SUPPORTING INFORMATION

XXXXX.....X
XXXXX.....X
XXXXX.....X

Lago Vista Comprehensive Plan - Executive Summary

Introduction:
Community growth and change are inevitable; responsibly accommodating growth and change requires a Comprehensive Plan (the "Plan"). The Plan encourages predictable growth and compatible neighborhoods, aligning development projections with infrastructure and services designed for the long-term.

1. **What is a Comprehensive Plan**?
    a. A guidance document, advisory in nature, to prompt policy makers to focus on the community's expectations when considering how Lago Vista evolves over the next 10 to 20 years.
2. **What the Plan is NOT…….**
    a. The Plan does not grant zoning or development rights.
    b. The Plan does not replace adopted ordinances, budgets or capital improvement programs.
    c. The Plan does not predetermine land uses, densities or development outcomes, but makes recommendations based on the Vision (below).

3. **Components of the Plan – the long term "Vision":**
    a. Community values.
        i. Preserve the scenic charm of Lago Vista's lakeside setting, hill country landscape and sweeping views.
        ii. Support the strong sense of community by strengthening communication and bolstering civic engagement.
        iii. Expand municipal facilities to foster community gatherings and serve as hubs for local activities.

    b. Future Land Use Map (the "FLUM") to include six (6) 'Place Types'.
        i. **Destination Retail** – commercial uses intended to support tourism.
        ii. **Local Commercial** – restaurant, retail, day-to-day services and medical.
        iii. **Civic Places and Parks** – Including, but not limited to, City Hall, City services (police, fire), library, parks and recreation, community amenities and open space conservation.
        iv. **Residential Large Lot** – One residence for a 2+ gross acre lot
        v. **Residential Standard Lot** – One residence for lots varying in size from ¼ to 1.99 gross acres
        vi. **Residential High Density** – Up to eight (8) residences on 1 gross acre lot, carve out to include senior housing/assisted living, and multi-family housing.

    c. Mobility, safety, utility infrastructure and City services.
        i. Improve multi-modal connectivity in new developments - pedestrian and bike paths, golf carts(?).
        ii. Improve traffic safety and explore alternative routes for ingress/egress.
        iii. Enhance emergency preparedness and hazard mitigation (fire/flood).
        iv. Strengthen infrastructure resilience (fire flow and backup generators).
        v. Ensure long-term utility and resource management (water, waste-water, storm drainage).

    d. Funding all the above utilizing sustainable fiscal policy.

i. Support business attraction and retention through the Economic Development Commission (EDC).
ii. Clarify the development process and streamline review and permitting.
iii. Support redevelopment and reinvestment of existing commercial corridors.
iv. Explore expansion of tourism centered businesses, airport expansion(?).
v. Consider public/private partnerships and/or 380 agreements.

4. Supporting Materials:

a. Future Land Use Map (FLUM)
b. Airport Action Plan
c. Parks and Recreation Master Plan
d. Thoroughfare Plan
e. Travis County Hazard Mitigation
f. Wastewater Master Plan

AGENDA ITEM NO. XI.2

Item Cover Page

CITY COUNCIL AGENDA ITEM REPORT

DATE: June 4, 2026

SUBMITTED BY: Jordan Strohmeyer, Development Services

SUBJECT: Consider, discuss, and take action on an Ordinance XXXXXXX Adopting the City of Lago Vista Development Procedures Manual and Establishing Administrative Procedures for Development Review, Permitting, Application Processing, and Related Development Services Activities

BACKGROUND:

Historically, procedural requirements, application expectations, review workflows, submittal standards, and administrative practices have existed across multiple ordinances, departmental procedures, internal practices, and operational documents. The proposed Development Procedures Manual ("DPM") is intended to consolidate and standardize these administrative procedures into a single adopted reference document to assist applicants, staff, consultants, and development professionals.

The DPM establishes standardized procedures related to development applications, permit processing, review sequencing, inspection scheduling, digital submissions, forms, checklists, and other administrative development review functions necessary to implement the City's adopted regulations. The DPM is administrative in nature and is not intended to establish independent zoning regulations, land use standards, density regulations, or other legislative requirements established by ordinance.

The proposed ordinance also establishes a framework allowing limited administrative updates to procedural forms, checklists, references, workflows, and similar operational items where such revisions are administrative in nature and do not conflict with federal law, state law, or adopted City ordinances. Legislative matters, including zoning classifications, permitted uses, density standards, dimensional regulations, and fees established by

ordinance, remain subject to City Council approval.

The DPM is intended to operate in coordination with the separately adopted Engineering Criteria Manual ("ECM"), which governs engineering design standards, infrastructure specifications, drainage criteria, roadway standards, utility standards, and related technical engineering requirements applicable to development within the City.

FINDINGS:

The City Council finds that adoption of the Development Procedures Manual is necessary to promote consistent administration of the City's development regulations and to improve efficiency, transparency, and predictability within the development review and permitting process.

The City Council further finds that the Development Procedures Manual establishes standardized administrative procedures, application requirements, review sequencing, permitting workflows, inspection scheduling procedures, and related operational processes necessary to implement the City's adopted regulations in a uniform and consistent manner.

The City Council additionally finds that the Development Procedures Manual is administrative in nature and does not establish independent zoning classifications, permitted land uses, density standards, dimensional regulations, or other legislative requirements required by state law or City ordinance to remain adopted by ordinance.

The City Council further finds that allowing limited administrative updates to procedural documents, forms, references, checklists, and technical coordination materials will improve operational efficiency and allow the City to maintain current administrative standards without requiring repeated ordinance amendments for non-substantive revisions.

Finally, the City Council finds that adoption of the Development Procedures Manual serves a valid public purpose and supports the

orderly administration of development, permitting, subdivision review, and related development services activities within the City of Lago Vista and its extraterritorial jurisdiction.

RECOMMENDATION:

Motion to approve an ordinance adopting the City of Lago Vista Development Procedures Manual (DPM) to establish standardized administrative procedures, application requirements, permitting workflows, development review processes, and related operational procedures for implementation of the City's development regulations.

ATTACHMENTS:

Development Procedure Manual.docx
DPM Ord.docx

Project: 25-2897-CPLAN
Project Name: Sunset Ranch Concept Plan and Letter of Intent

Submittal Date: 01/20/26 **Comments Issued:** 02/23/26

Ketan Patel
Managing Partner
Sunset Ranch Lago Vista, LLC
P.O. Box 4338
Lago Vista, Texas 78645

Dear Mr. Patel,

The City of Lago Vista ("City") has completed a comprehensive initial review of the Concept Plan and Letter of Intent submitted for the proposed Sunset Ranch development. This letter constitutes the City's formal response to the submitted Concept Plan and is issued pursuant to the City's authority under the Texas Local Government Code and the City of Lago Vista Code of Ordinances.

The purpose of this correspondence is to document the City's jurisdictional posture, identify material deficiencies in the submitted Letter of Intent, outline information required for further consideration, and clearly articulate the statutory, fiscal, infrastructure, public safety, and administrative framework under which the City may consider whether to proceed with discussions regarding a potential Development Agreement, Strategic Partnership Agreement, and related agreements. Nothing in this letter shall be construed as approval of the Concept Plan, a commitment to provide municipal utilities or services, consent to annexation, or the creation of vested rights of any kind.

1. Jurisdictional Status and Threshold Considerations
The subject property is located partially outside the City's corporate limits and extraterritorial jurisdiction. Under Texas Local Government Code Chapters 42 and 43, the City retains broad discretion over extraterritorial jurisdiction matters, annexation, and the extension of municipal services. The City is under no statutory obligation to approve development or extend municipal utilities, police services, or other municipal services beyond its corporate limits or ETJ.

Further, pursuant to Texas Local Government Code Chapter 245, no development rights vest absent the filing and approval of a complete application under the City's adopted regulations. Concept plan review is conducted solely for high-level evaluation and does not confer priority, entitlement, or expectation of future service.

2. Concept Plan Review Status
The City acknowledges receipt of the Concept Plan for informational and discussion purposes only. Concept plans are non-binding and do not establish development rights, utility capacity reservations, annexation commitments, or entitlement to future approvals.

Any consideration of development, infrastructure coordination, or municipal utility service associated with the proposed project must be governed by a comprehensive Development Agreement, authorized under Texas Local Government Code Chapter 212, Subchapter G, and approved by City Council following public consideration.

3. Deficiencies in the Submitted Letter of Intent
The Letter of Intent, as submitted, does not provide sufficient detail to allow the City to evaluate feasibility, fiscal impacts, infrastructure demands, service delivery implications, long-term maintenance responsibilities, or statutory compliance. Material deficiencies include, but are not limited to, the absence of:

- A defined development phasing strategy with timing and scale by phase;

- Quantified utility service requests by phase, including interim service assumptions;
- Acknowledgment of annexation authority, timing, or obligations, including any mandatory annexation framework;
- Identification of off-site infrastructure responsibilities and funding obligations, including cost participation and timing;
- Preliminary MUD financing assumptions, including proposed bond caps, issuance schedule, and anticipated tax rate impacts;
- Discussion of parks and parkland dedication, fees-in-lieu, trails, and public open space responsibilities;
- Consideration of airport compatibility and proposed land dedication in the southeastern portion of the property (acreage, timing, configuration);
- Identification of applicable impact fees and exactions and acknowledgment of assessment timing;
- Discussion of police services, solid waste service, and development services administration, including interim and long-term arrangements;
- A framework for transition of services, facilities, and debt retirement prior to full-purpose annexation;
- Any process addressing infrastructure condition, inspection, rehabilitation, and acceptance standards prior to annexation and City acceptance.

Until these deficiencies are addressed, the City cannot meaningfully assess the proposal or determine whether further discussions are warranted.

4. Information Required from the Developer

To allow staff to evaluate whether continued consideration of the Concept Plan is warranted, the developer must submit the following. Submission of this information does not imply City approval and does not obligate the City to proceed.

A. Development Program and Phasing

- A detailed development narrative describing land uses, densities, unit counts, non-residential square footage, and anticipated timing by phase;
- A phasing plan identifying infrastructure delivery, requested service levels, and proposed annexation milestones.

B. Municipal Utility District (MUD) Information

- Proposed MUD boundaries and governance structure;
- Preliminary bonding assumptions, including maximum bond authorization, issuance schedule, and projected tax rate impacts;
- Written acknowledgment of the City's authority to condition or limit MUD creation, bond issuance, reimbursement terms, tax rates, and annexation consent.

C. Infrastructure Responsibilities and Financing

- Written confirmation that the developer and/or MUD will be responsible for all onsite and off-site infrastructure required to serve the development;
- A preliminary infrastructure financing plan identifying funding sources, timing, and proposed reimbursement mechanisms.

D. Annexation Commitments

- Written acknowledgment of mandatory full-purpose annexation within fifteen (15) years;
- Any proposed interim limited-purpose annexation structure;
- Conveyance of facilities and elimination of MUD debt prior to full annexation.

E. Parks, Airport, and Public Facilities

- A parks and open space plan identifying parkland dedication areas and/or fee-in-lieu proposals, trail connectivity, and maintenance responsibilities;
- Identification of land proposed for airport-related dedication in the southeastern portion of the property, including acreage, configuration, and timing.

F. Impact Fees

- Acknowledgment that the development will be subject to all applicable impact fees, including water, wastewater, roadway, and park-related fees, assessed in accordance with adopted City ordinances and state law.

5. Off-Site Water Infrastructure Determinations and Preliminary Cost Estimates

A consulting engineer retained on behalf of the City has evaluated the off-site water infrastructure required to serve the proposed development and determined that the project would require substantial expansion of the City's regional water system, including treatment, transmission, pumping, and related pressure plane infrastructure. Certain improvements are required solely to serve the proposed development rather than existing City entitlements.

Based on current system conditions and preliminary engineering analysis, the total projected cost of off-site water infrastructure improvements attributable to the proposed development is approximately $8.69 million, allocated by phase as follows:

- Phase 1 (0–275 LUEs): approximately $2.95 million
- Phase 2 (275–900 LUEs): approximately $5.74 million

These figures are preliminary, informational, and time-limited and are provided solely to illustrate the magnitude of infrastructure investment required. Actual costs, scope, sequencing, and timing may change based on final engineering, regulatory requirements, and City capital prioritization.

Consistent with Texas Local Government Code Chapter 212 and the City's Code of Ordinances:

- All off-site improvements attributable to the proposed development must be fully funded by the developer and/or MUD;
- Any consideration of utility service shall be strictly phased and conditional and tied to completion and/or guaranteed funding of required improvements;
- No interim or ultimate allocation of capacity shall be construed as creating a vested right under Texas Local Government Code Chapter 245.

6. Police Services

The provision of police services is a core municipal function. Any extension of police services to the proposed development area must be evaluated in the context of response times, staffing levels, equipment needs, and long-term operational costs.

The Letter of Intent does not address police service impacts. The developer must provide:

- Acknowledgment that police services are not guaranteed outside the City limits;
- A discussion of interim service expectations, if any;
- Acknowledgment that long-term police service obligations will be addressed through annexation and Development Agreement provisions.

7. Solid Waste (Trash) Service

Solid waste collection and disposal services are regulated through City franchising and contractual arrangements. The Letter of Intent does not identify proposed trash service providers or service models.

The developer must acknowledge:

- That solid waste service must comply with City franchise agreements and ordinances;
- That service models may change upon annexation;
- That interim arrangements outside the City limits do not bind the City upon annexation.

8. Development Services, Permitting, and Construction Standards

All development associated with the proposed project, including subdivision, site development, infrastructure construction, and vertical building, shall be subject to City review, permitting, and inspection to the extent authorized by law and any executed agreements.

The developer must acknowledge that:

- All permits must be applied for and obtained through the City's Development Services Department, including but not limited to subdivision plats, construction plans, site plans, building permits, and inspections;
- All infrastructure, roadways, drainage facilities, utilities, and buildings must comply with City-adopted standards, including subdivision and development ordinances, engineering design manuals, adopted roadway and fire access standards, and the City's adopted building codes and amendments;

- No private standards, alternative specifications, or phased "temporary" standards shall apply absent express City approval.

9. City Review and Permitting Fees

The developer must acknowledge that the proposed development will be subject to all applicable City fees, including but not limited to:

- Application and review fees for concept plans, plats, site plans, and construction plans;
- Building permit and inspection fees;
- Utility connection and inspection fees;
- Impact fees and parkland dedication fees, where applicable;
- Any third-party review or consultant reimbursement fees authorized by City ordinance.

Fees shall be assessed in accordance with the City's adopted fee schedule in effect at the time of application and are subject to periodic update by City Council.

10. Mandatory Infrastructure Inspection, Operations & Maintenance, and Acceptance Prior to Annexation

Given the anticipated length of time between initial construction and full-purpose annexation, the City requires a mandatory infrastructure condition assessment and rehabilitation process as a prerequisite to infrastructure acceptance and annexation. This requirement is intended to ensure the City does not assume ownership or maintenance responsibility for infrastructure that has experienced deferred maintenance, premature deterioration, or does not meet adopted City standards at the time of acceptance.

Accordingly:

- At or before the ten (10) year annexation milestone, all public infrastructure intended for City ownership, operation, or maintenance—including but not limited to roadways, drainage facilities, water and wastewater infrastructure, and associated appurtenances—shall undergo a comprehensive condition assessment.
- Inspections shall be performed by qualified third-party professionals, subject to City review and approval, and shall include appropriate testing, documentation, and reporting sufficient to evaluate remaining useful life and compliance with City standards.
- The developer and/or MUD shall be responsible for all costs associated with inspections, testing, evaluation, reporting, and any City or third-party review.
- Based on inspection findings, the developer and/or MUD shall complete all required operations and maintenance activities, rehabilitation, repair, or replacement work necessary to bring the infrastructure into full compliance with City standards in effect at the time of acceptance.
- No infrastructure shall be accepted by the City, and no annexation shall occur, until all required corrective actions and O&M obligations are completed to the City's satisfaction, and all required documentation has been delivered.

The Letter of Intent does not address this required acceptance framework. The developer must submit, as part of any Development Agreement discussions, a proposed inspection, remediation, O&M completion, and acceptance process, including:

- Proposed inspection scope, methods, and minimum testing protocols;
- Proposed timing and deliverable schedule;
- Standards for determining deficiency, remediation, and re-inspection;
- Funding mechanisms and enforcement tools to ensure completion prior to annexation;
- Documentation to be provided at acceptance (record drawings, O&M manuals, warranties, asset inventories, and related materials).

11. Strategic Partnership Agreement

Given the long-term fiscal, service, and governance implications of the proposed development, the City anticipates that any Development Agreement would be accompanied by a Strategic Partnership Agreement pursuant to Texas Local

Government Code §43.0751, addressing service provision, revenue allocation, annexation sequencing, infrastructure acceptance, and debt retirement.

12. Conclusion

This letter constitutes the City's formal response to the submitted Concept Plan. It documents jurisdictional authority, identifies deficiencies in the Letter of Intent, outlines required supplemental information, and establishes the legal, infrastructure, service, and administrative framework necessary for further consideration.

The City reserves all rights under state law and its Code of Ordinances. Should the developer wish to proceed, the information identified herein must be submitted for staff review prior to any further discussions.

Regards,

Jordan Strohmeyer

Jordan Strohmeyer
Director of Development Services
City of Lago Vista

ORDINANCE NO. _____

AN ORDINCE OF THE CITY COUNCIL OF THE CITY OF LAGO VISTA, TEXAS, ADOPTING A DEVELOPMENT PROCEDURES MANUAL; PROVIDING FOR THE ADMINISTRATION AND IMPLEMENTATION OF DEVELOPMENT REVIEW PROCEDURES, TECHNICAL STANDARDS, APPLICATION REQUIREMENTS, AND ENGINEERING PRACTICES; PROVIDING FOR APPLICABILITY; PROVIDING FOR CONFLICTING PROVISIONS; PROVIDING FOR SEVERABILITY; PROVIDING FOR REPEALER; PROVIDING FOR CODIFICATION; PROVIDING FOR AN EFFECTIVE DATE; AND PROVIDING FOR PROPER NOTICE AND MEETING.

WHEREAS, the City Council of the City of Lago Vista, Texas ("City"), is authorized under the Constitution and laws of the State of Texas, including but not limited to Chapters 51, 54, 211, 212, and 214 of the Texas Local Government Code, to regulate development, subdivision construction, infrastructure improvements, permitting, engineering standards, and land development activities within the City and its extraterritorial jurisdiction; and

WHEREAS, the City Council finds that the adoption of a consolidated Development Procedures Manual is necessary to promote the health, safety, and welfare of the public and to provide consistent administrative procedures, engineering standards, technical criteria, application requirements, and development review practices; and

WHEREAS, the City Council further finds that certain technical standards, engineering practices, administrative procedures, application requirements, and construction specifications may require periodic updates to reflect current professional standards, technological advancements, state or federal requirements, drainage and infrastructure considerations, and accepted engineering practices; and

WHEREAS, the City Council desires to adopt a Development Procedures Manual to supplement and implement the City's Code of Ordinances, Unified Development Code, Engineering Design Standards Manual, Construction Standards Manual, and other adopted regulations; and

WHEREAS, the City Council finds that the Development Procedures Manual should control over conflicting procedural or technical provisions of the Code where expressly authorized herein, while preserving all substantive zoning, land use, and legislative requirements established by ordinance; and

WHEREAS, the City Council finds that adoption of the Development Procedures Manual serves a valid public purpose and provides for the orderly administration of development regulations within the City.

NOW, THEREFORE, BE IT ORDAINED BY THE CITY COUNCIL OF THE CITY OF LAGO VISTA, TEXAS:

SECTION 1. FINDINGS INCORPORATED.

The findings set forth above are hereby adopted and incorporated herein for all purposes as if fully set forth herein.

SECTION 2. ADOPTION OF DEVELOPMENT PROCEDURES MANUAL.

(a) The document entitled “City of Lago Vista Development Procedures Manual” (“DPM”), as may be amended from time to time in accordance with this Ordinance, is hereby adopted as an official administrative manual of the City.

(b) The DPM is intended solely to establish:

1. Administrative procedures;
2. Development review procedures;
3. Application requirements;
4. Submittal standards;
5. Review sequencing;
6. Required forms and checklists;
7. Filing and notice requirements;
8. Digital submission requirements;
9. Processing timelines;
10. Administrative workflows;
11. Inspection scheduling procedures;
12. Record document requirements;
13. Permit processing procedures;
14. Platting and development application procedures; and
15. Other procedural or administrative requirements necessary for implementation of the City’s development regulations.

(c) The DPM shall not establish independent engineering design standards, construction specifications, or infrastructure technical criteria except where necessary to reference adopted standards.

(d) Engineering design standards, infrastructure specifications, construction standards, drainage criteria, roadway standards, utility requirements, and related technical criteria shall be governed by the separately adopted “City of Lago Vista Engineering Criteria Manual” (“ECM”).

(e) A copy of the DPM shall be maintained by the Development Services Department and shall be made available for public inspection during normal business hours and through the City’s official website when practicable.

SECTION 3. PURPOSE AND APPLICABILITY.

(a) The DPM is intended to:

1. Implement and administer adopted City ordinances and development regulations;
2. Establish uniform administrative procedures;
3. Clarify application and permitting requirements;
4. Improve consistency in development review processes;
5. Establish standardized submittal and review practices; and
6. Promote efficient administration of development regulations.

(b) The DPM shall apply to all development, subdivision, permitting, site development, infrastructure review, platting, and related administrative activities occurring within the City and, where authorized by law, within the City's extraterritorial jurisdiction.

(c) The ECM shall govern all engineering design criteria, construction standards, infrastructure specifications, technical engineering requirements, drainage standards, utility standards, and other objective engineering criteria applicable to development within the City and, where authorized by law, within the City's extraterritorial jurisdiction.

(a) The Development Procedures Manual is intended to:

1. Implement and administer adopted City ordinances and development regulations;
2. Establish uniform procedures and technical standards;
3. Provide objective engineering and administrative criteria;
4. Improve consistency in development review and inspection processes;
5. Clarify application and permitting requirements;
6. Promote safe and coordinated infrastructure development; and
7. Ensure compliance with applicable federal, state, and local requirements.

(b) The Development Procedures Manual shall apply to all development, subdivision, construction, permitting, site development, infrastructure installation, engineering review, and related activities occurring within the City and, where authorized by law, within the City's extraterritorial jurisdiction.

SECTION 4. ADMINISTRATIVE AUTHORITY.

(a) The City Manager or designee is authorized to administer and implement the DPM and ECM.

(b) The Director of Development Services, City Engineer, or their designees may:

1. Prepare administrative forms, checklists, and standard operating procedures;
2. Interpret procedural and technical provisions of the DPM and ECM;
3. Update references to external technical standards, manuals, engineering specifications, state forms, or agency requirements where such updates are administrative in nature and do not create new substantive regulatory requirements;
4. Approve minor administrative revisions necessary to correct formatting, typographical errors, internal references, broken citations, procedural sequencing issues, or technical inconsistencies; and
5. Issue administrative guidance documents consistent with the adopted regulations of the City.

(c) Administrative updates to the DPM and ECM may be approved by the City Manager or designee without City Council approval when such revisions:

1. Do not conflict with federal law, state law, or City ordinance;
2. Do not modify zoning classifications, permitted uses, density standards, dimensional standards, or other legislative regulations;
3. Do not establish new fees or increase fees established by ordinance;

4. Do not materially alter substantive development rights or obligations;
5. Are procedural, technical, clerical, operational, or administrative in nature; and
6. Are necessary to:
   (A) improve administrative efficiency;
   (B) clarify application requirements;
   (C) reflect current engineering practices;
   (D) incorporate updated external standards or agency requirements;
   (E) improve consistency in review procedures;
   (F) revise forms, checklists, or submittal requirements;
   (G) address technological or digital submission changes; or
   (H) ensure proper implementation of adopted City regulations.

(d) Administrative revisions approved pursuant to this Section shall:

1. Be maintained by the Development Services Department;
2. Include a revision date and summary of changes;
3. Be made available for public inspection; and
4. Take effect upon publication or implementation by the City unless otherwise specified.

(e) Any revision that materially changes a substantive development regulation, modifies zoning entitlements, alters permitted land uses, changes density or dimensional standards, creates new fees, or otherwise constitutes a legislative action under state law shall require approval by ordinance of the City Council.

SECTION 5. CONFLICTING PROVISIONS.

(a) The DPM and ECM are intended to supplement and implement the City's Code of Ordinances and other adopted development regulations.

(b) In the event of a conflict between the DPM, ECM, and the City Code, the following standards shall apply:

1. The Code of Ordinances and Unified Development Code shall control with respect to:
   (A) zoning classifications;
   (B) permitted land uses;
   (C) density standards;
   (D) dimensional requirements;
   (E) legislative procedures;
   (F) penalty provisions;
   (G) fee amounts established by ordinance;
   (H) variance authority;
   (I) vested rights determinations; and
   (J) any matter required by state law to be established by ordinance.
2. The DPM shall control with respect to:
   (A) administrative procedures;
   (B) application requirements;
   (C) submittal requirements;
   (D) filing procedures;
   (E) processing procedures;

(F) review sequencing;
(G) formatting requirements;
(H) digital submission standards;
(I) administrative workflows; and
(J) other procedural implementation requirements.

3. The ECM shall control with respect to:
   (A) engineering design standards;
   (B) construction specifications;
   (C) drainage criteria;
   (D) roadway standards;
   (E) utility standards;
   (F) infrastructure specifications;
   (G) material standards;
   (H) testing requirements;
   (I) technical engineering criteria;
   (J) standard details; and
   (K) other objective engineering or construction requirements.

(c) Where a conflict exists between provisions, the City Manager or designee may determine the applicable provision consistent with the intent of this Ordinance.

(d) Nothing in this Ordinance, the DPM, or the ECM shall be interpreted to waive or reduce any requirement imposed by federal law, state law, or an ordinance of the City.

SECTION 6. INCORPORATION OF TECHNICAL STANDARDS.

The ECM may incorporate by reference:

1. Engineering design manuals;
2. Construction standards manuals;
3. Standard specifications;
4. Nationally recognized engineering practices;
5. Drainage criteria manuals;
6. Utility standards;
7. Fire code standards;
8. Building code standards;
9. Environmental regulations;
10. Transportation criteria manuals;
11. Geographic information system standards;
12. Digital drafting standards; and
13. Other objective technical references deemed necessary for implementation of City development regulations.

The Development Procedures Manual may incorporate by reference:

1. Engineering design manuals;

2. Construction standards manuals;
3. Standard specifications;
4. Nationally recognized engineering practices;
5. Drainage criteria manuals;
6. Utility standards;
7. Fire code standards;
8. Building code standards;
9. Environmental regulations;
10. Transportation criteria manuals;
11. Geographic information system standards;
12. Digital drafting standards; and
13. Other objective technical references deemed necessary for implementation of City development regulations.

SECTION 7. ENFORCEMENT.

(a) Compliance with the Development Procedures Manual shall be required as a condition of approval for permits, plats, site development applications, engineering plans, public infrastructure acceptance, certificates of occupancy, and other applicable development approvals.

(b) Failure to comply with the Development Procedures Manual may result in:

1. Denial of an application;
2. Suspension of review activities;
3. Withholding of permits or approvals;
4. Rejection of construction work;
5. Withholding of infrastructure acceptance;
6. Issuance of stop work orders where authorized by law; or
7. Other remedies authorized by the City Code or state law.

SECTION 8. NON-EXCLUSIVE REMEDIES.

The remedies provided herein are cumulative and non-exclusive and shall not limit the City's authority to pursue any other remedy available under law.

SECTION 9. SEVERABILITY.

If any section, subsection, sentence, clause, phrase, or provision of this Ordinance is for any reason held unconstitutional, invalid, or unenforceable by a court of competent jurisdiction, such holding shall not affect the validity of the remaining portions of this Ordinance, and the City Council hereby declares that it would have adopted this Ordinance and each provision thereof irrespective of the invalidity of any particular provision.

SECTION 10. REPEALER.

All ordinances or parts of ordinances in conflict with this Ordinance are hereby repealed only to the extent of such conflict.

SECTION 11. EFFECTIVE DATE.

This Ordinance shall take effect immediately upon its passage and adoption in accordance with law.

PASSED AND APPROVED on first reading this ____ day of _____, 2026.

PASSED, APPROVED, AND ADOPTED on second and final reading this ____ day of _____, 2026.

CITY OF LAGO VISTA, TEXAS

_____

Shane Saum, Mayor

ATTEST:

_____

Robin Smith, City Secretary

AGENDA ITEM NO. XI.3

Item Cover Page

CITY COUNCIL AGENDA ITEM REPORT

DATE: June 4, 2026

SUBMITTED BY: Charles West, City Manager

SUBJECT: Discussion and possible direction regarding the establishment of workshop meeting dates and times for reviewing proposed Charter amendments, including the anticipated review schedule, process for Council discussion, and timeline for preparing any proposed amendments for future ballot consideration.

AGENDA ITEM NO. XI.4

Item Cover Page

CITY COUNCIL AGENDA ITEM REPORT

DATE: June 4, 2026

SUBMITTED BY: Charles West, City Council

SUBJECT: Discussion and possible direction regarding the feasibility of establishing bike trails within the Cedar Breaks area.

AGENDA ITEM NO. XI.5

Item Cover Page

CITY COUNCIL AGENDA ITEM REPORT

DATE: June 4, 2026

SUBMITTED BY: Charles West, City Council

SUBJECT: Discussion and possible direction regarding the City's efforts to move toward Type I effluent standards, including an update on the status of the related permit application.

AGENDA ITEM NO. XI.6

Item Cover Page

CITY COUNCIL AGENDA ITEM REPORT

DATE: June 4, 2026

SUBMITTED BY: Charles West, City Council

SUBJECT: Discussion and possible direction regarding the submission of comments to the Lower Colorado Regional Water Planning Group, Region K, concerning the Regional Water Plan and the State Water Plan.

AGENDA ITEM NO. XI.7

Item Cover Page

CITY COUNCIL AGENDA ITEM REPORT

DATE: June 4, 2026

SUBMITTED BY: Charles West, City Council

SUBJECT: Discussion and possible direction regarding potential applications to the Texas Water Development Board.