LEE COUNTY BOARD OF COMMISSIONERS
DENNIS WICKER CIVIC CENTER
1801 NASH STREET
SANFORD, NC 27330

Monday, February 21, 2022
6:00 PM

A G E N D A

CALL TO ORDER

INVOCATION

PLEDGE OF ALLEGIANCE

I. ADDITIONAL AGENDA

II. APPROVAL OF CONSENT AGENDA

II.A Refund and Release Report for January 2022

II.B County of Lee Transit System Annual Safety Plan Review

II.C Minutes from the February 7, 2022

II.D Minutes from the January 27-28, 2022 Planning Retreat

II.E Personnel Policy Change (J-7 Emergency Response Plan)

II.F Kimble's Commissary Contract

II.G Microsoft Email Licensing via Lee County NC 543 COVID funds.

II.H Added Item-Approval of Agreement with Vines Architecture

III. PUBLIC HEARINGS

IV. PUBLIC COMMENTS

V. OLD BUSINESS

V.A Project 4836-01-20 Lee County Courthouse and Government Center COR 09 and COR 10 Approval Request

VI. MANAGERS REPORTS

VI.A County Managers Monthly Report for February 2022

VII. COMMISSIONERS' COMMENTS

ADJOURN

ITEM #: II.A

LEE COUNTY AGENDA ABSTRACT
BOARD OF COMMISSIONERS - REGULAR

MEETING DATE: February 21, 2022

SUBJECT: Refund and Release Report for January 2022

DEPARTMENT: Tax

CONTACT PERSON: Tracy Lee,

TYPE: Consent Agenda

REQUEST	Approve the Refund and Release Report for January 2022
BUDGET IMPACT	None
ATTACHMENTS	Gen Statute 105.docx RELEASE CODES SPREADSHEET.xls January Personal Property Abatement Report.pdf
PRIOR BOARD ACTION	N/A
RECOMMENDATION	Approve Refund and Release Report for January 2022

SUMMARY

This is a summary of all refunds and/or releases processed during January 2022 for Personal and/or Real property bills.

§ 105-381. Taxpayer's remedies.

(a) Statement of Defense. - Any taxpayer asserting a valid defense to the enforcement of the collection of a tax assessed upon his property shall proceed as hereinafter provided.

(1) For the purpose of this subsection, a valid defense shall include the following:

a. A tax imposed through clerical error;

b. An illegal tax;

c. A tax levied for an illegal purpose.

(2) If a tax has not been paid, the taxpayer may make a demand for the release of the tax claim by submitting to the governing body of the taxing unit a written statement of his defense to payment or enforcement of the tax and a request for release of the tax at any time prior to payment of the tax.

(3) If a tax has been paid, the taxpayer, at any time within five years after said tax first became due or within six months from the date of payment of such tax, whichever is the later date, may make a demand for a refund of the tax paid by submitting to the governing body of the taxing unit a written statement of his defense and a request for refund thereof.

(b) Action of Governing Body. - Upon receiving a taxpayer's written statement of defense and request for release or refund, the governing body of the taxing unit shall within 90 days after receipt of such request determine whether the taxpayer has a valid defense to the tax imposed or any part thereof and shall either release or refund that portion of the amount that is determined to be in excess of the correct tax liability or notify the taxpayer in writing that no release or refund will be made. The governing body may, by resolution, delegate its authority to determine requests for a release or refund of tax of less than one hundred dollars ($100.00) to the finance officer, manager, or attorney of the taxing unit. A finance officer, manager, or attorney to whom this authority is delegated shall monthly report to the governing body the actions taken by him on requests for release or refund. All actions taken by the governing body or finance officer, manager, or attorney on requests for release or refund shall be recorded in the minutes of the governing body. If a release is granted or refund made, the tax collector shall be credited with the amount released or refunded in his annual settlement.

RELEASE CODE DESCRIPTIONS

1		ALLOWABLE EXEMPTION NOT APPLIED
2		LAND USE DEFERMENT NOT APPLIED OR ABATEMENT MADE AFTER BILLING
3		PROPERTY DOUBLE LISTED BY TAXPAYER OR TAX OFFICE
4		TAX SITUS OF PROPERTY OUTSIDE JURISDICTION
5		REAL PROPERTY DATA IN ERROR
6		PERSONAL PROPERTY DATA IN ERROR
7		PROPERTY LISTED TO INCORRECT OWNER
8		LATE LIST PENALTY
9		TAXPAYER LISTED PERSONAL PROPERTY THEY DID
		NOT OWN
10		PROPERTY VALUE APPEALED TO ASSESSOR, BOARD OF E&R OR PROPERTY TAX COMMISSION
11		BUSINESS PERSONAL PROPERTY ASSESSMENT: NO LONGER OWNED OR OUT OF BUSINESS
12		PERSONAL PROPERTY SOLD PRIOR TO JAN 1ST.
13		TAX FORECLOSURE SALE
T		TAXPAYER
TO		TAX OFFICE
LR		LAND RECORDS
TA		TAX APPRAISAL
TOS		TAX OFFICE SOFTWARE
TFS		TAX FORECLOSURE SALE
GP		GARBAGE PICKUP
VA		VACANT OR ADJUSTMENT FOR WASTE FEE
CY		CITY OF SANFORD OR TOWN OR BROADWAY
B		BANKRUPTCY SETTLEMENT
A		AUDIT APPEAL OR ERROR

Personal Property Abatement Report

Lee County, NC
From: 1/1/2022
To: 1/31/2022

Name	Value	County Tax	County Penalty	City Tax	City Penalty	District Tax	District Penalty	Total	Rel. Code
2021									
Refund									
SCHWARTZMIER, JOSEPH	$1,640.00	$12.46	$1.25	$10.17	$1.02	$0.00	$0.00	$24.90	TO-6
Refund Totals:	**$1,640.00**	**$12.46**	**$1.25**	**$10.17**	**$1.02**	**$0.00**	**$0.00**	**$24.90**	
Release									
GARRIS, EMILY CALHOUN	$25,375.00	$192.85	$0.00	$157.33	$0.00	$0.00	$0.00	$350.18	T-6
RIDDLE, KAREN	$31,420.00	$238.79	$23.88	$0.00	$0.00	$36.13	$3.61	$302.42	T-6
CHILDRESS, ROBERT JAY	$38,823.00	$295.05	$0.00	$240.70	$0.00	$0.00	$0.00	$535.76	T-6
FRANK, MARCUS	$1,066.00	$8.10	$0.81	$0.00	$0.00	$1.55	$0.15	$10.61	T-1
DAVIS, DEBORAH LYNN	$37,650.00	$286.14	$28.61	$0.00	$0.00	$43.30	$4.33	$362.38	T-3
JERNIGAN, JULIETTE ANN	$10,000.00	$76.00	$0.00	$62.00	$0.00	$0.00	$0.00	$138.00	T-6
L3HARRIS TECHNOLOGIES INC - ADSB NC-LEE	$28,179.00	$214.16	$0.00	$0.00	$0.00	$32.41	$0.00	$246.57	TO-3
Release Totals:	**$172,513.00**	**$1,311.10**	**$53.30**	**$460.03**	**$0.00**	**$113.38**	**$8.10**	**$1,945.91**	

ITEM #: II.B

LEE COUNTY AGENDA ABSTRACT
BOARD OF COMMISSIONERS - REGULAR

MEETING DATE: February 21, 2022

SUBJECT: County of Lee Transit System Annual Safety Plan Review

DEPARTMENT: Senior Services

CONTACT PERSON: Debbie Davidson, Senior Services Director

TYPE: Consent Agenda

REQUEST	Approve the COLTS Safety Plan for Calendar Year 2022
BUDGET IMPACT	N/A
ATTACHMENTS	Lee County Safty Plan Policy Statement BOC.docx
PRIOR BOARD ACTION	BOC Approval with NC DOT Review February 15, 2021
RECOMMENDATION	Approve County of Lee Transit System Annual Safety Plan Review.

SUMMARY

The North Carolina Department of Transportation requires an annual review of the COLTS safety plan by the COLTS Administrative Staff and sign off by the Lee County Board of Commissioners. A formal compliance review is completed by the NC DOT Safety Department Staff every three years. This was completed in January 2021 with no deficiencies found. There have been no changes to the plan in the past year. All policies and procedures are up to date and followed by the COLTS operation staff. Signature pages with the detailed information are included for the review of the Board. The full copy of the plan is available at the Enrichment Center and COLTS Offices if any Board member would like to review it.

County of Lee Transit System Safety and Security Plan

The County of Lee Transit System seeks input from both our governing board and staff in the development of the following Safety and Security Plan (SSP). We value this input and feel it adds assurance that a culture of safety is a high priority at the County of Lee Transit System. Our governing board provides input annually as part of their approval of the SSP. Staff is involved in reviewing various sections of the SSP throughout the year during monthly safety meetings or at the time an issue needs their input, enhancements are made to the plan. All agency staff implement the plan through their various roles and responsibilities.

The Safety and Security Plan includes:

- Fare Collection Policy
- Training Manual
- New Hire Policies and Procedures
- Data Security
- Safety and Security Evaluations
- Personnel Files – annual driver evaluations
- Hazardous Material Safety Data Sheets (and their physical location)

Other Plans Included with possible impact of SSP

- Local or regional emergency management plan
- Continuity of Operations Plan (COOP)
- County Asset Management Plan
- Other agency evacuation plans that included transit

Accountable Executive/Senior Management

- Has final authority over how the Safety Program is developed and implemented
- Controls financial resources required for system's operation in collaboration with the Lee County Finance Director
- Collaborates with the Lee County Human Resources Director to conduct the system's operation
- Retains ultimate responsibility for the safety performance of the system's operation

Communication of Plan to Staff

The County of Lee Transit System staff review a copy of the SSP during their initial new hire training program and updates to the plan are conveyed through the Transportation Coordinator via the following:

- memorandums to each staff
- notices posted on bulletin board in staff room
- notices attached to each paycheck envelope
- safety meetings
- trainings on Safety and Security Plan (SSP)
- SSP page updates requiring employee signature
- other

Any changes to the plan are discussed with employees to ensure they fully understand the change, policies or procedures effected and impacts to their daily responsibilities. A copy is given to staff that includes items such as the updates to the Drug and Alcohol Policy.

SAFETY POLICY STATEMENT

The Management Team of the County of Lee Transit System recognizes that an effective Safety Management System (SMS) is vital to the success and longevity of the transit system. Therefore the Executive Management is committed to implementing and maintaining a fully functional SMS and to the continuous improvement of the level of safety throughout the County of Lee Transit System.

- The County of Lee Transit System Management Team will establish specific safety-related objectives and will periodically publish and distribute to all employees those objectives and plans.

- These safety objectives will be monitored, measured, and tracked to ensure overall corporate safety objectives are met. All employees and individuals in the company have the responsibility to perform their duties and activities in the safest practical manner.

- The County of Lee Transit System Management Team is committed to providing the necessary financial, personnel, and other resources to establish and maintain a fully functional SMS.

- The County of Lee Transit System Management Team is dedicated to establishing a confidential employee reporting system to report all hazards, accidents, incidents, and safety issues without fear of reprisal.

- Activities involving intentional disregard for FTA and NCDOT regulations, organization policies and procedures, illegal activities, and/or drugs or alcohol may be subject to disciplinary action.

- As a component of the SMS, the County of Lee Transit System Management Team is committed to establishing, maintaining, and periodically exercising an emergency response procedure and plan that provides for the safe transition from normal to emergency operations.

The Management Team will convey this expectation to all employees through postings, safety meetings, organization newsletter, and any other means to ensure all employees are aware of the organizations SMS, their duties and responsibilities, and our safety policy.

The Lee County Board of Commissioners will periodically review this safety policy and the Management Team will ensure it remains relevant and appropriate to the organization.

_____

Signature
Chair – Lee County Board of Commissioners

_____

Date

Policy Statement

The management of safety is one of our core business functions. The County of Lee Transit System is committed to developing, implementing, maintaining, and constantly improving processes to ensure that all our transit service delivery activities take place under a balanced allocation of organizational resources, aimed at achieving the highest level of safety performance and meeting established standards.

All levels of management and all employees are accountable for the delivery of this highest level of safety performance, starting with the Chair of the Lee County Board of Commissioners, Lee County Manager and Director of Lee County Senior Services.

The County of Lee Transit System is committing to safety standards through:

- Support the management of safety through the provision of appropriate resources, that will result in an organizational culture that fosters safe practices, encourages effective employee safety reporting and communication, and actively manages safety with the same attention to results as the attention to the results of the other management systems of the organization;
- Integrate the management of safety among the primary responsibilities of all managers and employees;
- Clearly define for all staff, managers and employees alike, their accountabilities and responsibilities for the delivery of the organization's safety performance and the performance of our safety management system;
- Establish and operate hazard identification and analysis, and safety risk evaluation activities, including an employee safety reporting program as a fundamental source for safety concerns and hazard identification, in order to eliminate or mitigate the safety risks of the consequences of hazards resulting from our operations or activities to a point which is consistent with our acceptable level of safety performance;
- Ensure that no action will be taken against any employee who discloses a safety concern through the employee safety reporting program, unless disclosure indicates, beyond any reasonable doubt, an illegal act, gross negligence, or a deliberate or willful disregard of regulations or procedures;
- Comply with, and wherever possible exceed, legislative and regulatory requirements and standards;
- Ensure that sufficient skilled and trained human resources are available to implement safety management processes;
- Ensure that all staff are provided with adequate and appropriate safety-related information and training, are competent in safety management matters, and are allocated only tasks commensurate with their skills;
- Establish and measure our safety performance against realistic and data-driven safety performance indicators and safety performance targets;
- Continually improve our safety performance through management processes that ensure that appropriate safety management action is taken and is effective; and
- Ensure externally supplied systems and services to support our operations are delivered meeting our safety performance standards.

_____

Signature – Chair Lee County Board of Commissioners

_____

Date

ITEM #: II.C

LEE COUNTY AGENDA ABSTRACT
BOARD OF COMMISSIONERS - REGULAR

MEETING DATE: February 21, 2022

SUBJECT: Minutes from the February 7, 2022

DEPARTMENT: Governing Body

CONTACT PERSON: Jennifer Gamble, Deputy County Attorney/Clerk to the Board of Commissioners

TYPE: Consent Agenda

REQUEST	Review and approve minutes from the February 7, 2022 Board of Commissioners meeting.
BUDGET IMPACT	None
ATTACHMENTS	BOC Minutes 2-7-22 Regular Meeting- Draft.docx
PRIOR BOARD ACTION	N/A
RECOMMENDATION	Approve minutes from the February 7, 2022 Regular Meeting.

SUMMARY

A draft of the minutes from the February 7, 2022 Board of Commissioners meeting is enclosed for the Board's review and approval. For questions related to Board of Commissioners meetings contact Board Clerk Jennifer Gamble at jgamble@leecountync.gov.

LEE COUNTY BOARD OF COMMISSIONERS
MCSWAIN EXTENSION EDUCATION AND AGRICULTURE CENTER
2420 TRAMWAY ROAD
SANFORD, NC 27330

February 7, 2022

MINUTES

Roll Call
Present: Arianna Lavallee, Dr. Andre Knecht, Robert Reives, Cameron Sharpe, Kirk Smith, Bill Carver, Mark Lovick

CALL TO ORDER
Chairman Kirk Smith called the meeting to order at 6:00 p.m.

INVOCATION
Commissioner Bill Carver provided an invocation and led the Board in the Pledge of Allegiance.

PLEDGE OF ALLEGIANCE

I. ADDITIONAL AGENDA
Commissioner Robert Reives requested to move item VI.C. Consideration of amendment to Audit Services Agreement with Thompson, Price, Scott, Adams, and Co., P.A. from New Business to the Consent Agenda.
Motion: Motion to approve the agenda as amended.
Mover: Robert Reives
For: 7 - Arianna Lavallee, Dr. Andre Knecht, Robert Reives, Cameron Sharpe, Kirk Smith, Bill Carver, Mark Lovick
Motion Result: Passed

II. APPROVAL OF CONSENT AGENDA
Motion: Motion to approve the Consent Agenda as amended.
Mover: Robert Reives
For: 7 - Arianna Lavallee, Dr. Andre Knecht, Robert Reives, Cameron Sharpe, Kirk Smith, Bill Carver, Mark Lovick
Motion Result: Passed

II.A Purchase of pharmacy grade refrigerator for vaccine storage
Pharmacy Grade Refrigerator.jpg

II.B Approval of Budget Amendment
#02/07/22/14 #02-07-22-14.pdf

II.C Capital Project Ordinance for Bob Hales Recreation Center
Bob Hales Recreation Center Project Ordinance.pdf

II.D Minutes from the January 24, 2022 Regular Meeting
Draft BOC Minutes 1-24-22 Regular Meeting.docx

II.E Award of service side arm to Captain Jeff Johnson for his years of service with the Lee County Sheriff's Office
scan_bestes_2022-01-25-10-27-15.pdf
Resolution of Award of Service Side Arm to Captain Jeff Johnson.docx

II.F Reappointment of George Wayne Watson to the Board of Equalization and Review

II.G Appointment of Cecil C. Cameron as an alternate to the Board of Equalization and Review

II.H Appointment of Chair to the Board of Equalization and Review
Resolution Establishing BOER.pdf

II.I Addition of Cricket Hearth Road to the State's Secondary Road System
RESOLUTION - Addition to State Highway System - Cricket Hearth Road.docx

III. PUBLIC HEARING

III.A Hold a public hearing for an economic development project to lease space from Lee County Growth V, for a spec building located in Central Carolina Enterprise Park

On March 15, 2021, the County held a public hearing to expend money to lease space at Central Carolina Enterprise Park in the amount of $325,000 over the 24 months of the lease. The City of Sanford, Lee County, Sanford Area Growth Alliance and Growth One V LLC entered into a Memorandum of Understanding in which the spec building at Central Carolina Enterprise Park would be used to market Lee County and the City of Sanford to entice new companies to locate and create jobs within our community. The County has been asked to increase the lease amount due to increased construction costs since the MOU was passed. Notice of the public hearing ran in the Sanford Herald on January 27, 2022. In order to take a vote following the public hearing, the Commissioners will need to vote to waive their policy.

Chairman Smith opened the public hearing for comment.

The following person spoke in favor of the project:

- Jimmy Randolph, 3405 Windmere Drive, Sanford, NC
No one spoke in opposition of the project.
Chairman Smith closed the public hearing.
Fully Executed MOU with Lee Co_City of Sanford_LCGV.pdf Scanned Copy of Amendment MOU for Spec Building 3.pdf

Motion: Motion to waive policy following a public hearing to move forward with voting.
Mover: Arianna Lavallee
For: 7 - Arianna Lavallee, Dr. Andre Knecht, Robert Reives, Cameron Sharpe, Kirk Smith, Bill Carver, Mark Lovick
Motion Result: Passed

Motion: Motion to approve amendment to the Memorandum of Understanding to lease space from Lee County Growth V for a spec building located at Central Carolina Enterprise Park.
Mover: Robert Reives
For: 7 - Arianna Lavallee, Dr. Andre Knecht, Robert Reives, Cameron Sharpe, Kirk Smith, Bill Carver, Mark Lovick
Motion Result: Passed

IV. PUBLIC COMMENTS

Pursuant to N.C. General Statute 153A-52.1, the floor was opened for Public Comments.
The following people provided comment:
- Jimmy Randolph, 3405 Windmere Drive, Sanford, NC (Multi-Sports Complex Design)
- Susan Keller, 2030 Windmill Drive, Sanford, NC (Multi-Sports Complex) - submitted via e-mail

V. OLD BUSINESS

V.A PARTF Grant Application Award

Parks and Recreation Director Joseph Keel said Phase II at Kiwanis Children's Park includes a nature-themed play area for children ages 2-5, restroom/shelter plaza, ADA-compliant sidewalks with trail head and site furnishings. Phase II at Kiwanis Children's Park would complete the Site-Specific Master Plan for this park that was completed in 2018. The total project cost for Phase II at Kiwanis Children's Park is $579,915. The County has been awarded $209,000 from PARTF Grant. County appropriations of $370,915 are needed to complete the project.
2022-2023 Kiwanis Children's Park Place Phase II.xls PARTF_Diagram_Lee_County_2021.pdf

Motion: Motion to accept $209,000 in matching PARTF grant funds for Kiwanis Children's Park Phase II and authorize the Chairman to sign any necessary paperwork following legal review.
Mover: Robert Reives
For: 7 - Arianna Lavallee, Dr. Andre Knecht, Robert Reives, Cameron Sharpe, Kirk Smith, Bill Carver, Mark Lovick
Motion Result: Passed

V.B Planning Board Recommendation for a Zoning Map Amendment (Rezoning) for 118 Perkinson Road from RR to HC

Planning Administrator Amy McNeill provided a summary of an application from Circle K. Stores to rezone 0.45 acres of land developed with a single-family home addressed as 118 Perkinson Road from Residential Restricted (RR) to Highway Commercial (HC). The Planning Board met on January 24th after the public hearing was held and voted unanimously to recommend that the Commissioners approve the proposed zoning map amendment. Prior to the vote, the Chairman read the following conflict of interest statement: "If anyone has a conflict of interest pursuant to NC General Statute 160D-109 as a reminder, a governing board member shall not vote on a legislative decision regarding a development regulation adopted pursuant to this chapter where the outcome is reasonably likely to have a direct, substantial and readily identifiable financial impact on the member. A governing board member shall not vote on any zoning map amendment if the landowner of the property subject to a rezoning petition or the applicant for a text amendment is a person with whom the member has a close familial, business or other associational relationship." No one on the board indicated a conflict of interest.

001-REZ@118 Perkinson Rd-BINDER.pdf

Motion: Motion that the proposed zoning is consistent with the Plan SanLee long-range plan designation of Maker District because this district is supportive of commercial uses, such as convenience retail, with public water and sewer and lists Highway Commercial as a current zoning district.

Mover: Arianna Lavallee

For: 7 - Arianna Lavallee, Dr. Andre Knecht, Robert Reives, Cameron Sharpe, Kirk Smith, Bill Carver, Mark Lovick

Motion Result: Passed

Motion: Motion to approve the Planning Board's recommendation to approve the proposed zoning map amendment because it is reasonable and in the public interest because it allows commercial land uses and specifically lists convenience retail as an example. Also, the adjoining site is currently developed with a convenience store with gas sales served by public water and sewer.
Mover: Dr. Andre Knecht
For: 7 - Arianna Lavallee, Dr. Andre Knecht, Robert Reives, Cameron Sharpe, Kirk Smith, Bill Carver, Mark Lovick
Motion Result: Passed

V.C Planning Board Recommendation for a Zoning Map Amendment (Rezoning) for three lots off of Lower Moncure Road to Rezone from RA to Mitchell Conditional Zoning District

Planning Administrator Amy McNeill presented a summary of an application from Mark Mitchell to rezone four vacant adjoining tracts of land totaling 2.43 acres with frontage on Lower Moncure Road from Residential Agricultural (RA) to the Mitchell Conditional Zoning District to allow the development of the site in a commercial manner, the Planning Board met on January 24th after the public hearing was held and voted unanimously to recommend that the Commissioners approve the proposed zoning map amendment. The board discussed that the long-range plan is a "broad brush stroke" guide for future growth and that this request appears to be in line with the nonresidential land use designation of Industrial Center that is located on the opposite side of the Lower Moncure Road. Using this rationale, they deemed the request consistent with the long-range plan. Chairman Smith verified that no conflict of interest was expressed among the board members.

002-CZ@(V)Lower Moncure Rd-BINDER.pdf

Motion: Motion that the proposed zoning map amendment is consistent with the Plan SanLee long-range plan designation of Countryside because a contractor's office with outdoor storage may assist with maintaining a rural lifestyle.
Mover: Arianna Lavallee
Moved To: Approve
For: 7 - Arianna Lavallee, Dr. Andre Knecht, Robert Reives, Cameron Sharpe, Kirk Smith, Bill Carver, Mark Lovick
Motion Result: Passed

Motion: Motion to approve the recommendation of the Planning Board for the proposed zoning map amendment because the site must be developed in a manner proposed by the information submitted with the rezoning application and is legally binding on the land.
Mover: Dr. Andre Knecht
For: 7 - Arianna Lavallee, Dr. Andre Knecht, Robert Reives, Cameron Sharpe, Kirk Smith, Bill Carver, Mark Lovick
Motion Result: Passed

V.D Annual adoption of the Lee County Government Strategic Plan for 2022 -2027

Communications Specialist Hailey Hall provided a summary of changes to the Strategic Plan discussed at the Board Retreat on January 27th along with a couple of proposed changes, a copy of the summary is attached to these minutes. Sheryl Trent, consultant with SBrand, is in the process of incorporating changes made to the Strategic Plan and will provide a finalized copy pending any changes made by the Board. Over the last six months, the Strategic Plan has been reviewed by staff and the Board and updated based on the input received. Under Arts and Culture, a new objective was proposed by staff based on the Board's discussion at the Retreat and the suggested objective under Goal 1, states: "Assist in the expansion of spaces that promote local artists and makers." Commissioner Carver proposed a new objective under Goal 1 of Partnerships. Commissioner Carver said he believed the change is recommended because there are issues that ethnic and racial groups are concerned about in the county as is evidenced by the Task Force report received by the Board at the last meeting. County Manager John Crumpton indicated he has not received a lot of complaints in this regard from the public or employees, however it does not mean they are not received by the Board. The Task Force report was a City project. Staff was uncertain if the data presented was representative of the unincorporated areas, although the three topics that were presented by the Task Force to the Commissioners are items they felt the County had responsibility for. Dr. Crumpton said the Board would need to give guidance on the kind of data they would like staff to collect and review, and there are some benchmarks out there that other groups are already reviewing that could be used to develop data for the Board to review. Besides Census data, no other data is currently collected. Commissioner Reives expressed he did not have any objections to the language presented for the objective, but was concerned about how it would be implemented. Commissioner Carver recommended talking to Central Carolina Community College stating that they have a sophisticated way of collecting information on these issues in a form that's called disaggregated, which looks at information about their population and separating them into different racial and ethnic groups. This form gives them insight as to what the performance factors are doing. Commissioner Carver noted that the North Carolina Association of County Commissioners has provided information related to what is going on in different counties related to these issues.

Strategic Plan Change Summary 2-7-22.docx

LCG Strategic Plan 2022 1.25.22.pdf

Motion: Motion to approve objective under Goal 1 of Arts and Culture to "Assist in the expansion of spaces that promote local artists and makers."
Mover: Robert Reives
For: 7 - Arianna Lavallee, Dr. Andre Knecht, Robert Reives, Cameron Sharpe, Kirk Smith, Bill Carver, Mark Lovick
Motion Result: Passed

Motion: Motion to add an objective under Goal 1 of Partnerships to "Promote dialogue with community leaders to foster better relationships and trust among all ethnic and racial groups in Lee County. Collect and review appropriate data to facilitate discussion that will improve the quality of life for all citizens."
Mover: Bill Carver
For: 1 - Bill Carver
Against: 6 - Arianna Lavallee, Dr. Andre Knecht, Robert Reives, Cameron Sharpe, Kirk Smith, Mark Lovick
Motion Result: Failed

Motion: Motion to adopt finalized Strategic Plan for 2022-2027.
Mover: Cameron Sharpe
For: 7 - Arianna Lavallee, Dr. Andre Knecht, Robert Reives, Cameron Sharpe, Kirk Smith, Bill Carver, Mark Lovick
Motion Result: Passed

VI. NEW BUSINESS

VI.A Tax Lien Advertisement for Delinquent 2021 Real Property Taxes

North Carolina General Statute 105-369(a) requires the Tax Collector to report to the governing board the unpaid real property taxes for the current fiscal year. The governing board must then order the tax collector to advertise the tax liens. A report of all unpaid 2021 real property taxes was submitted to the Clerk to the Board and the Board of County Commissioners on Wednesday, January 26, 2022, and is on file with the Clerk to the Board. The advertisement of tax liens will be published in the Sanford Herald no sooner than March 1, 2022. The total amount of unpaid property taxes as of January 26, 2022 was $2,102,790.27.

GS_105-369.pdf

Motion: Motion to order the Tax Collector to advertise the tax lien for 2021 delinquent real property taxes.
Mover: Dr. Andre Knecht
For: 7 - Arianna Lavallee, Dr. Andre Knecht, Robert Reives, Cameron Sharpe, Kirk Smith, Bill Carver, Mark Lovick
Motion Result: Passed

VI.B Project 4839-02-22 Lee County Conceptual Design Multi-Sports Complex Design RFQ Award Recommendation

On December 22, 2021, a Request for Qualifications opening was held for Project 4839-01-22 Lee County Multi-Sports Complex Design. Six sealed qualifications from a variety of companies across the region were received. The selection process resulted in three in-person interview requests and one follow up on reference check for the short list of finalists. After a detailed review, the staff committee recommended McAdams from Durham, NC as the design firm for the project.

Lee County Conceptual Design Multi Sports Complex Design RFQ Award Recommendation and Results.pdf

4.1 McAdams - Multi Sport Complex Presentation.pdf

Motion: Motion to approve McAdams as the design firm for Project 4839-02-22 Lee County Multi-Sports Complex.
Mover: Robert Reives
For: 7 - Arianna Lavallee, Dr. Andre Knecht, Robert Reives, Cameron Sharpe, Kirk Smith, Bill Carver, Mark Lovick
Motion Result: Passed

VI.C Consideration of amendment to Audit Services Agreement with Thompson, Price, Scott, Adams, and Co., P.A.
Moved to the Consent Agenda.
Lee County - Fee Estimate (002).pdf

VI.D Financial Assurance for the Hazardous Waste Management Permit Modification for the Ownership Change of the Magneti Marelli Facility
As part of the hazardous waste management permit modification related to the purchase of the Magneti Marelli facility, the County has to provide financial assurance to the NC Department of Environmental Quality for the permit. Based on our conversations with staff of the department, the County needs to provide a Letter of Credit and Trust Agreement to meet the financial assurance requirement. The County has 180 days from the time the permit is transferred to provide the financial assurance. The amount of the Letter of Credit needs to be $405,708 and will be subject to annual inflation adjustments. Staff has reached out to our current bank, First National Bank, to begin working on the necessary Letter of Credit and Trust Agreement. The County will be required to place $405,708 in a savings account or 12-month CD to secure the Letter of Credit. It is anticipated that the fees to establish the Letter of Credit will be approximately $500.
Model Document LETTER OF CREDIT pc-ca.docx
Model Trust Agreement or Standby Trust Agreement Example 2021 (002).docx

Motion: Motion to authorize staff to proceed with First National Bank in establishing the necessary Letter of Credit and Trust Agreement to meet the requirements of the NC Department of Environmental Quality and if the documents are substantially the same as presented, to authorize the Board Chairman to sign any necessary documents.
Mover: Robert Reives
For: 7 - Arianna Lavallee, Dr. Andre Knecht, Robert Reives, Cameron Sharpe, Kirk Smith, Bill Carver, Mark Lovick
Motion Result: Passed

VI.E Approval to spend monies related to the hazardous waste mitigation at the Magneti Marelli site

The Board purchased the Magneti Marelli site in July 2021. The site will eventually be turned over to Central Carolina Community College to become the E. Eugene Moore Manufacturing and Biotech Solutions Center. There is a hazardous waste permit attached to the site due to the manufacturing from Magneti Marelli. The current classified use is for industrial purposes; however, the hazardous waste will need to be cleaned up to satisfy residential standards in order to turn the property over to the Community College. Lee County has been working with Terraquest Environmental to evaluate the permit and determine the least costly way to remediate the permit. Terraquest will have to work closely with the NC Department of Environmental Quality to seek their approval throughout the process. There is currently $100,000 in escrow for the cleanup, $200,000 was committed by Mark Lyczkowski and Ray Covington toward the project and $200,000 was committed by the County. County Manager John Crumpton requested authority to spend money up to $250,000 related to the cleanup of the permit. The consultant is trying to work as quickly as possible toward the ultimate goal of no further action from NCDEQ so the County can proceed to transfer to the property to the Community College. Dr. Crumpton said he will provide the Board with reports related to where the County is in the process as we move forward.

Motion: Motion to authorize the County Manager to spend money up to $250,000 related to the hazardous waste mitigation at the Magneti Marelli site.

Mover: Dr. Andre Knecht

For: 7 - Arianna Lavallee, Dr. Andre Knecht, Robert Reives, Cameron Sharpe, Kirk Smith, Bill Carver, Mark Lovick

Motion Result: Passed

VII. MANAGERS' REPORTS

County Manager John Crumpton provided information regarding the tour of the Magneti Marelli site that will take place at 10 a.m. and 1 p.m. on Tuesday, February 8th for the Central Carolina Community College Board of Trustees and Board of Commissioners.

VIII. COMMISSIONERS' COMMENTS

ADJOURN

Motion: Motion to adjourn. The meeting adjourned at 7:04 p.m.

Mover: Robert Reives

For: 7 - Arianna Lavallee, Dr. Andre Knecht, Robert Reives, Cameron Sharpe, Kirk Smith, Bill Carver, Mark Lovick

Motion Result: Passed

_____

Kirk D. Smith, Chairman

Lee County Board of Commissioners

ATTEST:

_____

Jennifer Gamble, Clerk to the Board

ITEM #: II.D

LEE COUNTY AGENDA ABSTRACT
BOARD OF COMMISSIONERS - REGULAR

MEETING DATE: February 21, 2022

SUBJECT: Minutes from the January 27-28, 2022 Planning Retreat

DEPARTMENT: Governing Body

CONTACT PERSON: Jennifer Gamble, Deputy County Attorney/Clerk to the Board of Commissioners

TYPE: Consent Agenda

REQUEST	Review and approve minutes from the January 27-28, 2022 Planning Retreat.
BUDGET IMPACT	None
ATTACHMENTS	BOC Minutes Jan. 27-28 Planning Retreat - Draft.docx
PRIOR BOARD ACTION	N/A
RECOMMENDATION	Approve minutes from the January 27-28, 2022 Planning Retreat.

SUMMARY

A draft of the minutes from the January 27-28, 2022 Planning Retreat is enclosed for the Board's review and approval. For questions related to Board of Commissioners meetings contact Board Clerk Jennifer Gamble at jgamble@leecountync.gov.

LEE COUNTY BOARD OF COMMISSIONERS
PLANNING RETREAT
DENNIS WICKER CIVIC CENTER - CONFERENCE SECTION
1801 NASH STREET
SANFORD, NC 27330

January 27-28, 2022

MINUTES

January 27, 2022 - Retreat Day 1

Roll Call
Present: Arianna Lavallee, Dr. Robert Reives, Cameron Sharpe, Kirk Smith, Bill Carver, Mark Lovick

Absent: Dr. Andre Knecht, Robert Reives

DINNER - 5:30 P.M.

CALL TO ORDER - 6:00 P.M.
Chairman Smith called the Retreat to order at 6:00 p.m.

INVOCATION/PLEDGE OF ALLEGIANCE
Chairman Smith led the Board in the Pledge of Allegiance.

LEGISLATIVE UPDATE AND GOALS DISCUSSION
Representative John Sauls provided a legislative update. Representative Sauls provided a summary of local funding received from the State, which included $500,000 for the Depot Park revitalization; $500,000 from the Rural Infrastructure Authority for the farmers' market; Outreach Mission received $100,000; $10,000 for a mural project, which will highlight Steve Jones who led his high school football league in 1966, 1967 and 1969 to championship and in 1972 he was the ACC player of the year; $50,000 for the disabled section of the NC Veterans Memorial in Broadway; $9,000,000 for the Raleigh Executive Jetport to purchase land; $34,000,000 to expand the Water Treatment Plant; and $100,000 for the Railroad House Museum. Salaries for State employees and teachers received a 5% pay raise. The minimum wage was set at $15 dollars for non-certified school personnel and community college staff. $2,800 in bonuses was awarded to teachers using federal funds, along with $1,500 for law enforcement, correctional officers and staff. The death benefit was increased to $100,000 and was made retroactive for the families of

five correctional officers that passed. The low-income tax threshold was raised from $20,000 to $25,000. The personal income tax rate was modified to 3.99%. The income tax on military pensions was eliminated. Representative Sauls provided an update on the bill related to vehicle inspections. The bill allows the Department of Environmental Quality time to notify all maintenance shops in NC prior to going in effect. HB 473 turned to SB 473 was discussed concerning Board members serving on non-profit boards as voting members and potentially having to recuse themselves before approving budgets with funding allocated to those non-profits. When asked whether the Council of Government Board was included, the opinion is that they do not qualify because they serve as a function of the state. The issue with the legislation is whether there is a true conflict of interest for these Board members. To get around this, Boards may have to pass various budget ordinances to break out the budgets for the non-profit ordinances. If a board member had to recuse on the current Lee County Board of Commissioners, there could be a split vote of 3-3 and a non-profit may not receive funding as a result. Most votes on the budget have been unanimous. The members are trying to serve and help non-profit groups. Staff is now investigating whether the boards any of the Board of Commissioners currently serve are 501(c)(3) organizations. Counties are working with the North Carolina Association of County Commissioners to address this issue because it is statewide.

Chairman Smith stated that Fentanyl is coming across the border by the tons, which is really affecting the community. Chairman Smith voiced that we (Lee County) are in dire need of treatment facilities locally. He said he has discussed this issue with the new CEO of the hospital and for them it is not financially feasible. Rockingham and Davidson County have FirstHealth facilities that help with treatment. Representative Sauls said it is unfortunate that the Legislature pushed the mental health issue back on the counties. Individuals are held in emergency rooms for a number of weeks because of the unavailability of beds in the treatment facilities. When law enforcement administers Narcan and the individual walks away, they don't usually receive the help they need. County Manager John Crumpton said when the opioid settlement funds are received, there needs to be a regional collaboration to address getting people to places with treatment, along with providing better education. The opioid lawsuit may provide $4.6 million over a course of time. Adding the City of Sanford to the Memorandum of Agreement in the settlement would add an extra 10% to Lee County's settlement. The hospital and Sandhills Center will need to be a part of the equation.

Commissioner Knecht arrived at 6:33 p.m.

STRATEGIC PLAN UPDATE

Deputy County Attorney/Clerk to the Board Jennifer Gamble provided the Board with an update on changes to the Strategic Plan and presented the annual schedule for reporting, review and annual adoption. When reviewing objectives, Dr. Crumpton addressed whether the objectives within Goal 1 of the Arts and Culture focus area "to create a new building to grow spaces for affordable entertainment" are still a priority, referring to the existence and the Mann Center. He noted the second objective does not currently align with the Capital Improvement Plan adopted by the Board, which sets forth plans for capital projects over the next five years. Commissioner Lovick indicated the farmers' market will also include a featured arts section. The Board came to the consensus that the two objectives under the first goal for the focus area of Arts and Culture should be removed. The Board also agreed to add an objective for the focus area of Education under Goal 2 stating "Assess opportunities to expand broadband access in Lee County to increase accessibility to virtual learning opportunities." The Board

agreed to add an objective for the focus area of Partnerships stating "Asses ways to promote the development of additional affordable housing for the current and growing workforce."

Communications Specialist Hailey Hall provided a quarterly report for the first quarter, a copy of which is attached and incorporated into these minutes. An action step staff has completed is to start organizing a youth summit, which may occur in the Fall of 2022 and is proposed to be assisted by the newly formed Youth Council. Ms. Hall requested that the Board identify priorities in each of the six focus areas by identifying a goal in each area to focus on. Pertaining to Arts and Culture, Chairman Smith said that Goal 1 is being addressed through Downtown Sanford Incorporated and Kelli Laudate through the many events that are planned. Smith suggested prioritizing Goal 2 under Arts and Culture. Commissioner Carver asked to add in action items - building relationships in the cultural activities focusing on the fact that we are trying to focus on creating activities that bring people together and create appreciation. The Commissioners recommended Goal 2 as the priority in Arts and Culture. Under Community Safety, Ms. Hall said that she has requested a meeting with the new Sheriff to talk about marketing and future events. The County Manager discussed working with the Sheriff's Department to coordinate messaging and communications between county departments. Ms. Hall spoke about having more coordinated messages and being consistent in that messaging by being united in sending out information about certain items like inclement weather. She mentioned there are other ways that community safety and public trust can be built such as increasing public safety by staging ambulances in fire stations. Following discussion, the Board decided to prioritize all three goals under Community Safety at the same level. The Board discussed a modification of an objective under Economic Development to help the certification process to increase availability of certified and shovel ready industrial sites. Commissioner Carver requested consideration of an objective under Goal 3 in Economic Development stating "Review the effectiveness of services provided by the county to agriculture producers and promote communication between agribusiness leaders and commissioners." The Board agreed to the additional objective and recommended focus on Goal 3 under Economic Development. Commissioner Carver requested a continued focus on workforce development. Under Education, the Commissioners discussed the various education options in Lee County including charter, Christian, public and home schools, as well as daycares. Commissioner Knecht asked to evaluate ways to make sure these other institutions stay viable because with these we don't have to pay for facilities and staff like the County does with the public schools. Average Daily Membership (ADM) is still down for Lee County Schools (below 9,200 students), while these institutions have increased their enrollment. With the growing residential development, there may be a future need for growth in schools that may be accommodated by all educational institutions in the County. Strategic Services can identify where all the new developments are going and it is important to start identifying property for future public schools. The Board agreed to maintain focus on all three goals under Education. Under Health and Well Being, the Board agreed to prioritize Goal 1. Under Partnerships, Commissioner Carver suggested the addition of an objective stating "Promote dialogue with community leaders concerning diversity, equity, and inclusion. Collect and review appropriate data to facilitate discussion. Foster better relationships and trust among all parties and groups that make up the Lee County community." Commissioner Carver provided examples of policies instituted by Dr. Lisa Chapman at Central Carolina Community College related to diversity, equity and inclusion. He said that there is a realization that commissioners need to work closer with leaders in minority communities. Commissioner Smith read from the "Unholy Trinity of Diversity, Equity and Inclusion" stating that this county is founded upon equality in the eyes of the law and that we should be judging everyone equal

in the eyes of the law. Commissioner Carver referred to the Strategic Plan that the Sanford Equity Task Force developed stating that "We are a county where character is more important than the color of your skin." Following discussion, Commissioner Carver suggested that he will work on rewording the proposed objective to provide for the February 7th meeting.
LCG Strategic Plan 2022 1.25.22-HH.pdf
Board Retreat_SP Presentation.pptx
Lee County Commissioners Strategic Plan Updates Based on Feedback.docx

Commissioner Smith recessed the meeting until 8:30 A.M. on Friday, January 28, 2022.

January 28, 2022 – Retreat Day 2

CALL TO ORDER
Chairman Kirk Smith called the meeting back to order at 8:30 a.m.

EMS UDPATE - Barry Britt/Tim Simmons, FirstHealth
Development Services Director Santiago Giraldo is now the County staff person in charge of the contract oversight with FirstHealth and serves as the contact for EMS for the county. Tim Simmons who serves as the director for FirstHealth EMS in Lee County provided an update on EMS Systems. FirstHealth assumed operations 10/1/21. They set three primary goas – 1. Have response times to less than 8.59 minutes; 2. Staff at least three ambulances per day 24 hours per day with a goal to increase to 4 ambulances; and 3. Reduce lifting assistance requests/establish report. The average response time during the first quarter was 8 minutes and 21 seconds. On average, three trucks were staffed per day. The fire department lift assist requests were minimized due to availability of specialized lift assist equipment installed in one of the trucks. Investments in Lee EMS included $719,785 in salaries and wages; $46,774 for medical supplies; $16,972 for rent at 1218 Central Drive and the plan is to rent space to station a truck in Northview, which will be about $17,000 over a time period, $16,052 in clinical documentation, fuel costs of $10,448 and new ambulance/capital equipment cost of $657,000. Two new ambulances will be delivered in the next couple of weeks and will replace some of the ambulances, which will give a total of three to four brand new ambulances on the fleet. The cost of a truck is about $220,000-$230,000. One ambulance is a power load, which is where a stretcher is connected to the back of the truck and it does all the work lifting a patient into the truck. October 1 through the end of December, FirstHealth EMS responded to 2,227 calls in Lee County, which was the busiest county FirstHealth serves across the system.

Commissioner Lavallee arrived at 8:39 a.m.

The goal is to keep EMS trucks in the county, however there are times where medical necessity may require transport to other facilities, which occurred in 63 instances. Forty-nine were due to patient family requests. Simmons notes that sometimes based on truck status, patients have to be transferred to Central Carolina Hospital even if it's not their first preference. FirstHealth is responsible for in-county transports, while CCH has been responsible for out-of-county transfers. Each call on average takes about one hour to complete. One hundred and five patients were transferred to an out-of-county facility this past quarter. On average EMS received 10-11 calls per night. EMS staff work in 12-hour shifts. Congestion in the emergency department can impact the response time of EMS trucks, causing delays. FirstHealth currently has 19 out of 36 full time employee positions staffed with four in the Paramedic Academy. They started out with 12 employees. The Driver/EMT Academy currently has seven applicants. This is

a program where the State has allowed EMS systems to hire non-certified drivers. FirstHealth hired nine non-certified individuals and will pay for their education through EMS and once they are at the EMT level, they can enter the Paramedic Academy. FirstHealth has also worked with FEMA and will utilize FEMA assistance with EMS vehicles as it becomes available. They are working with the Sanford Police Communications Department to use CAD to improve response times through mapping. Monthly meetings are held with the rural fire department chiefs. FirstHealth plans to provide continuing education and better support to the fire departments going forward, however it is up to the fire departments to determine their level of participation. Phase I training for fire departments includes basic first aid, trauma first responder training, stop the bleed and tourniquets and pit crew CPR. Phase II training includes King airway (for EMT only) and Phase III training is for Narcan and IM Epinephrine Administration (EMT only). The plan going forward includes establishing an advanced first responder program, assessing ambulance placement/call density, assessing additional ambulance/QRV requirements, continuing hiring additional staff and to work closely with Sanford 911 to advance EMS. Simmons said one more ambulance will likely be needed for transport and they would also like to implement technology that would identify the closest ambulance to a scene to improve response times. The average is three trucks on the road at all times, but the goal is to get four trucks on the road once staffing levels are achieved. Simmons stated based on the majority of calls taking place in central Sanford, and with the Northview station coming online, there will likely be a need for an additional ambulance to come online. FirstHealth is doing an ambulance study so when a report is received at the end of February, they will be provided with the consultant's recommendation.
Lee Monthly Reports 10-1 - 12.31.21.pdf
Unstaffed Hours Oct_Dec.pdf

LEE PROMISE PROGRAM - Dr. Lisa Chapman, Central Carolina Community College

Lee County Promise Program Discussion

Dr. Lisa Chapman, President of CCCC, provided information regarding the Promise Program. CCCC has many programs offering short-term training that prepare students for entry-level jobs. There are more females taking advantage of post-secondary education than males. North Carolina Career and College Promise dual enrollment includes programs like Lee Early College. A thousand students in Lee County are participating in dual enrollment. More students are participating in pre-health and industrial programs, which may help meet some of the community workforce needs in the future. Commissioner Reives expressed a concern about the lack of involvement of the Board of Education in the Promise Program. Dr. Chapman proposed an action item to present about the Promise Program to the Board of Education. Commissioner Carver asked about career coach positions to help charter or private schools, which have not been previously available except for the public schools due to hours in the day and lack of resources. E. Eugene Moore donated $2,000,000 for the development of the E. Eugene Moore Manufacturing and Biotech Solutions Center formerly known as Magneti Marelli and can be used for the first endowed faculty position in machining, which will allow the college to continue to expand and add more modernization once there is a space available to add more equipment. Phase I would help get the biotech moving forward in the 8,000 square foot building next to the plant known as the Engineering Building. Phase II involves the development of the main building.
CCCC - Lee County Promise MOU 1-7-19.pdf

Chairman Smith requested at 10-minute break at 10:40 a.m.

ENVIRONMENTAL HEALTH - Heath Cain, Health Director, Anthony Williams, Environmental Health

Environmental Health Status Report

Anthony Williams with Environmental Health said the food program of Lee County is one of 50 counties enrolled in retail program standards, a program started by the FDA to ensure jurisdictions meet a uniform gold standard for food inspections. It creates a standard for restaurant operators and inspectors and there is grant funding available with no county match. Adhering to the higher standard also served to provide added protection for the public. Lee County has been enrolled since 2015 and has since has been awarded over $60,000 in grant funding. Because of the technical specialty needed to perform food and on-sight wastewater inspections, Health Director Heath Cain said there is a need to create two program specialist positions to provide quality assurance for each program to help with accreditation efforts. The food program is mainly regulated through program standards. This will help develop consistency among inspections and when restaurants switch ownership. The proposal is to reclassify two positions to program specialist within the program. In addition, another environmental health specialist will also be needed to replace a position once the position is reclassed into a food specialist.

Program_Specialist_Info.docx

2021_Lee_Co_Staffing Level Assessment tool.xlsx

Position_info_summary.xlsx

SANFORD AREA GROWTH ALLIANCE

Economic Development Update from the Sanford Area Growth Alliance

Jimmy Randolph and John Dean with the Sanford Area Growth Alliance provided information on SAGA's program of work. John Dean said that since 2018 there has been an increase in requests for information that come from a variety of sources such as the Partnership of NC and companies looking to relocate or expand. Last year, SAGA responded to over 105 RFIs where as previously the record was 78. SAGA has already responded to 12 RFIs this year. Most RFIs come from the Economic Development Partnership of NC. Out of 12 RFIs received, four have come from consultants. In 2019 there started to be very visible consistent growth when we saw large growth with Bharat Forge and Pfizer. The total investment in projects received is over $2.8 billion dollars and over 3,300 jobs. Lee County has been on the radar of life sciences manufacturing facilities looking at lots six and nine at CCEP. These companies are looking to decide this quarter. There are two significant challenges and one is workforce. The unemployment rate in Lee County is between 3.5% and 4%. The workforce has remained in the 25-27,000 and number of unemployed is around 1,000. The challenge this year is to continue to engage in the effective partnership between the public and private sector and continue to communicate what SAGA is trying to accomplish.

Chairman Smith departed the meeting at 11:29 a.m.

The Marelli facility will help the County differentiate from other areas because of the available training in life sciences. About a dozen inquiries received from existing industries that are being displaced because of a different use or they need additional space. This End UP Manufacturing plant has been leased to Caterpillar for three years. Mr. Randolph discussed other leased facilities by existing industry throughout the county. Basically, there are no existing vacant buildings available. SAGA is working with private developers at the Lee Brick site. The capacity is lining up for potential available inventory. Mr. Randolph advised that we

need to look at what kind of investments we want to continue to make and what investments may be made in the workforce so existing and new industries can grow. On the workforce front, SAGA is working on staffing opportunities to be a better partner on collaborating opportunities in addition to working on the redesign of SAGA's website. Liberty Tire is arriving in Lee County and anticipates opening in March. The building is essentially complete. At Central Carolina Enterprise Park, lots six and nine are about 37 acres. Lot 10 is about 55 acres and has some unsuitable wetlands and a stream. There are also smaller lots, including 11, 12 and 13. Sites are certified by NC Department of Commerce and have access to utilities. These are ready sites. Commissioner Carver suggested working with companies to develop visions for their workforce experience. An example was provided in Holly Springs with Project Galaxy where Wake County had the company create and lead a business sustainability round table to help the business remain sustainable in the county. This shows government is interested in working with companies but we expect them to be a part of the solution.

EconomicDevelopment-ProductReadyFlowChart-05.pdf

2023 REAPPRAISAL UPDATE - Michael Brown, Tax Administrator

Update on 2023 Reappraisal

Tax Administrator Michael Brown spoke about reappraisal process slated for January 2023. All real property is evaluated based on market value as of January 1, 2023. The values are looked at under a sales, cost and income approach. The last reappraisal was January 1, 2019. Statutes dictate that a reappraisal must occur at least every eight years, however Lee County does it every four years, which helps to keep up with the market. County tax administration staff for the reappraisal process include one manager, one reappraisal coordinator and three appraisers. The County will value all vacant land and residential approved property. Piner Appraisal is a vendor that will assist in valuing commercial/industrial properties. Staff is working on the next reappraisal now which is typically a two-year process. The schedule of values is a toolbox which is used and guidelines in the schedule of values that will be brought to the Board will include a schedule for market value and present use value, which can be done for agriculture, horticulture and forest land. There is an appeal process for anyone that has a dispute related to the determined values. An informal process is conducted by staff and after April 1st when the Board of Equalization and Review convenes, the appeals are turned over to the Board to consider changing values. Parcel count in 2021 is 31,867, which increased by 232 from the previous year. The parcel count is estimated to increase 112 parcels in 2022. Values are currently below market from the last reappraisal. The Eagleview Pictometry Project helps to get a straight down and 45-degree angle shot of a particular property. The software allows staff to measure building, topography and utility availability. The software also helps to identify changes made to properties. There were 8,123 properties reviewed in the last cycle which resulted in an increase of $10,661,000 in value. The change finder program cost about $115,000. NC values all property at true value, so value can't be determined for someone based on the property owner's age, however, State statutes have methods of relief that can help elderly and disabled property owners (§105-277.1). The elderly or disabled property tax exclusion is available if income is less than $31,900 for a married husband and wife, and they can receive up to a 50% exemption of the appraised value. For elderly it is 65 and older, for disabled it is totally or permanently disabled for the 50% exemption. $45,000 dollars can be exempted for veterans who are 100% disabled. People cannot double dip for extra exemptions. Tax relief amounts can change yearly and are tied to the cost of living. The Tax Department will be publishing a brochure with information about the appraisal process.

Board of County Commisionerâ€™s Retreat 01 2022.pptx

LUNCH 11:30 A.M. - 12:00 P.M.

AMERICAN RESCUE PLAN ACT (ARPA) FUNDING - Lisa Minter/Jen Waterhouse

American Rescue Plan Act - Coronavirus State and Local Fiscal Recovery Fund (CSLFRF) discussion

Jen Waterhouse, Fiscal Recovery Manager, presented information summarizing the ARPA survey results. A link was placed on the website and social media platforms and paper copies were sent to Social Services, the Health Department and the Library. Also, a mass mailer was sent out for employee input. 197 responses were received so for. Citizens ranked the funding categories in order of importance with one being the most important. The most important was identified as public health. Disproportionately impacted communities ranked promoting healthy environments as a top priority. Of the people who responded to the survey, 51% lived and worked in Lee County and 42% have endured a financial hardship related to COVID-19. The primary target audience was ages 45-54. The target for income was low-income market, however the majority of the people who responded indicated having household incomes over $55k. In Lee County, the ARPA grant funds awarded are $11,999,847. The first grant ordinance adopted by the Board appropriated $90,000.00. An amendment to the ordinance was adopted for premium pay which brought the balance down to $11,520,930. Grant Ordinance 2 brought the balance down to $10,144,445. The Board also selected to do the standard allowance of $10,000,000 under the revenue loss provisions of the grant. Assistant County Manager/Finance Director Lisa Minter reviewed the ARPA ranking results of proposed projects submitted by Board members. Commissioner Carver said he has been working with OMI and the Salvation Army on the idea of a homeless shelter to coordinate resources in the county to address low income and homeless people. A lot of resources in the county work together to try to mitigate duplicating services and stimulate generating income. He said the idea is how do we address the homeless community by evaluating who they are, providing resources to retrain and following up with counseling to move them on. Commissioner Carver said the basic idea is that they are trying to take property OMI already owns to donate to the county and for the county to build the building and contract with the resources in the County to run the facility. The estimated price is $2.2 million for men, women and families and to provide space for other ministries to operate. Commissioner Sharpe noted that the largest percentage of homeless is in the City. Dr. Crumpton advised that he did not believe it was a good idea that the County get into the business of building buildings and leasing them out to organizations, and suggested the Board would be better off considering grants to organizations so it is a one-time expenditure. He acknowledged that there has not been an interest expressed by the overall board to get into this kind of business long-term. Last year the Manager was asked to come up with a five-year plan to lower the tax rate to 68 cents and this is something that could inhibit that. Dr Crumpton stated that the County has a policy that in the health and human service area, we only do things we are required to do because when we get into these other services the problem comes up when the economy goes down and the county has to adjust the budget, focusing on cutting non-mandated services; however, this kind of project would require a permanent commitment. Commissioner Lovick said he was elected to help every person in the County so he was looking at the things that would do the most good for the most people and while there is sympathy for the homeless, he did not feel money would solve the problem.

Mrs. Minter noted that the air conditioning and heat in the Bob Hales Center received an $80,000 grant through the state budget and that this money would help with the project so putting this money along with $160,000 of ARPA funds will cover the project. The County will possibly

have to make the Bob Hales Center available for one-stop voting in October. Another capital project ordinance will be presented for this project so the heat and air will be in place for one-stop voting. One-stop voting for the primary is in June. Dr. Crumpton said the idea is that the City may run a youth program from the Hales Center.

Related to capital projects including the Courthouse, Government Center and Parks and Recreation, there are leftover funds. Development Services Director Santiago Giraldo has done well in managing the cost of these capital projects. So, with bond funds you either pay for additional projects in that category or turn over the money to the general fund for debt service. For the money related to the Horton Pool Project that was replaced with ARPA funds, it is up to the Board whether to put the money that was substituted toward other park projects or back in the general fund. There are some items that needed to be done such as purchasing a new chiller at the Courthouse, which has an estimated cost of about $500,000. It is time to reseal the parking lots and staff is looking at additional parking lot arms for control traffic, new fire system panels in the new and historic courthouses, at the courthouse the flooring has been replaced except in the second floor lobby, $50,000 is needed to do a padded cell at the jail and next to the Government Center there is water proofing needed at the Wellness Clinic building. At the Government Center, there is a need to replace a generator due to the Health Department's refrigerators and freezers for supplies like vaccines. An elevator to the third floor at a cost of $95,000 would make the third floor of the Government Center handicap accessible. Security lighting has been requested for parks including lighting of tennis and pickleball courts at O.T. Sloan Park at a cost of $300,000, a playground at Temple Park at a cost of $200,000 and there are parking lot issues at Horton Park with gravel parking not adhering to ADA standards. There is also some settling going on at the Courthouse facility in the jail section where the seams are misaligning that will need to be addressed. Commissioner Reives suggested fixing the waterproofing at the wellness center. Mrs. Minter suggested allowing staff to set a priorities list. The big issue at the Courthouse is the replacement of the chiller.

In a discussion regarding the $1,000,000 of funds that were substituted for the Horton Park Project from the ARPA funds, Dr. Crumpton stated that the $1,000,000 is going towards a project that the ARPA funds were intended for. So, if the Board wants to take $1,000,000 and apply it toward other projects for ARPA funding, it is his job to provide more options. The advice provided regarding the use of ARPA funds to replace the funds that were previously allocated from the general fund was provided to take strings away to relieve barriers to doing what the Board wants to do. Assistant County Manager/Finance Director Lisa Minter said that if you comingle these funds into the ARPA fund, which has more red tape, then it makes it more difficult for staff than if it is put it in the general fund which does not have as many restrictions. Mrs. Minter stated if you move money back to ARPA, it is just making it more difficult and that is part of the reason for the standard allowance that was adopted. Mrs. Minter suggested if the board is in agreement, staff will get together and now take the $1,000,000 that is left in parks projects to see what can be moved off of the ARPA list and taken care of and prioritize what is left. She also suggested adding a multifunctional room to the library project so it can be discussed with the design firm as staff is working on the contract. The Board gave a consensus to move forward with asking the Vines design firm for the library project to consider incorporating a design for a multifunction room. Commissioner Reives requested to categorize items.

ARPA Proposed Project List.pdf

Motion: Motion to put $1,000,000 in capital improvement projects identified on list provided.

Mover: Robert Reives
For: 5 - Arianna Lavallee, Dr. Andre Knecht, Cameron Sharpe, Mark Lovick, Robert Reives
Against: 1 - Bill Carver
Absent: 1 - Kirk Smith
Motion Result: Passed

FUND BALANCE POLICY DISCUSSION - Dr. John Crumpton/Lisa Minter

Financial Policy Adjustment

The Treasurer's Office has changed the way of looking at fund balance as a percentage of general fund expenditures. The threshold has been 8% and the Treasurer's Office is now raising the threshold to 20%. Assistant County Manager/Finance Director Lisa Minter recommended going from a 16% floor (County's current threshold) to a 24% floor. Out of the 95 counties reported in 2020, Lee County was one of 26 counties below 30% and still at a lower range at 32%. Having general fund balance helps cash flow projects until the County is able to go to market. County Manager John Crumpton said staff has looked at a tax rate decrease and a lot depends on what the Board decides to do with pay for the employees. Medicaid reform may cause a large increase in the budget for Social Services. Commissioner Knecht recommended taking the segment out of the incentive policy to see how much the policy has lowered the tax rate.

Fund Balance history.pdf

State Treasurer memo dated 8-11-21.pdf

Financial Policies revised 1-2022.pdf

Motion: Motion to adopt numbers as presented.

Mover: Robert Reives
For: 6 - Arianna Lavallee, Dr. Andre Knecht, Robert Reives, Cameron Sharpe, Bill Carver, Mark Lovick
Absent: 1 - Kirk Smith
Motion Result: Passed

CAPITAL IMPROVEMENT PLAN DISCUSSION

Capital Project Review

For the Multi-Sports Complex Project, staff has interviewed designers and will be making recommendations to the Board on February 7th. Dr. Crumpton said the design is going to look a lot different than the concept presented for the bonds because of soil and wetland issues on site. The design will have to use topography of the property to save costs. The plan is to have the same number of fields in a different configuration. The proposed schedule is looking at 12 months before the County can go out to bid for construction. Same thing with the library. On the library project, Vines should soon be under contract for the design and Samet/Sanford Contractors will be under contract in the next 30 days for the Construction Manager at Risk. Since the Board put aside money in Capital Project funds to put toward debt, the numbers for financing look really good even at a higher interest rate of 5%.

Courthouse Complex.pdf

LCGC Renovations.pdf

Park Improvements Project.pdf

Remaining Funds.pdf

New Capital Projects.pdf

FY 22-23 BUDGET PRIORITIES

FY 22-23 Budget Issues for staff and Dr. John Crumpton

A review of staff recommendations was provided due to potential staff expenditure increases. The COLA would have been 7.2% based on the County's policy and CPI. The County Manager thought this was a little high to consider in the budget, however over the last few years the COLA was so low that it was given above CPI. Dr. Crumpton proposed consideration of a 4% for fiscal year 2023. He said the priority is to maintain the pay plan which is estimated to cost $260,000. There is a proposed plan to take all regular employees to minimum wage of $15 per hour, but the timing of this could raise issues related to compression and equity to other staff. Dr. Crumpton suggested the budget could incorporate the increase by cutting the number in half and over next two budgets, which could bring everyone to $15 per hour while keeping separation in OSP. The Local Government Retirement System has increased rates. Building maintenance is anticipated at $350,000. Spec building changes included $81,500 that was budgeted for this year instead of $162,000 the County was possibly responsible for because the was construction for the next spec building was not anticipated to be completed prior to January 1st, but next year $131,250 would be added to the budget and the second year would cost $206,000 if the County had to pay for the lease. The County has not had to make any payments on the spec building lease agreements to date. In speaking with the schools, the Board of Education is recommending a supplement increase for teachers. Phase II of Parks Master Plan will be included in the budget. The parking lot at the County-owned EMS building will need to be replaced, which is anticipated to cost $252,000. Commissioners Reives asked if the EMS center parking lot expense could be done with ARPA funds, and Lisa Minter responded that it could come from the $10,000,000 standard allowance. Dr. Crumpton said the County's health insurance plan has had higher pay outs because of COVID-19, so there is an anticipated increase in cost. Three hundred and sixty employees are on insurance and only 74 carry anything above employee. The 74 employees pay $410 a paycheck or about $820 a month, so if it goes up then premiums are raised in the same amount. There is an employee plan, employee and children and a family plan. Lisa Minter suggested that another option the Board could consider is paying more toward someone who is paying for employee and children to offset the increase but the County Manager said there is an argument that if you supplement more children you add more costs. Commissioner Reives requested that the options be shared with the Board during budget time.

FY 2022 to 24 budget considerations.pdf

ADJOURNMENT

Motion: Motion to adjourn. The meeting adjourned at 2:51 p.m.

Mover: Robert Reives

For: 6 - Arianna Lavallee, Dr. Andre Knecht, Robert Reives, Cameron Sharpe, Bill Carver, Mark Lovick

Absent: 1 - Kirk Smith

Motion Result: Passed

_____

Kirk D. Smith, Chairman

Lee County Board of Commissioners

ATTEST:

_____

Jennifer Gamble, Clerk to the Board

_____

ITEM #: II.E

LEE COUNTY AGENDA ABSTRACT
BOARD OF COMMISSIONERS - REGULAR

MEETING DATE: February 21, 2022

SUBJECT: Personnel Policy Change (J-7 Emergency Response Plan)

DEPARTMENT: Human Resources

CONTACT PERSON: Joyce McGehee, Human Resources Director

TYPE: Consent Agenda

REQUEST	Approve change to Personnel Policy (J-7 Emergency Response Policy)
BUDGET IMPACT	N/A
ATTACHMENTS	J 7 Emergency Response Policy - Revision 3.doc A.1 Table of Contents (Revised 02-21-22).doc J 7 Emergency Response Plan(February 22, 2022).doc
PRIOR BOARD ACTION	N/A
RECOMMENDATION	Approve changes to Personnel Policy (J-7 Emergency Response Plan)
SUMMARY	

Changes are being made to Personnel Policy J-7. This is our emergency response policy. The policy is being revised to include new county facilities locations. The policy communicates the procedures for Evacuation and Sheltering to employees.

Emergency Response Policy

Number: J-7	Revision: 3	Effective Date: 02/21/2022	Pages: 9

1.0 Policy/Procedure

This Emergency Action Plan is intended to provide guidelines on general evacuation and means of egress along with severe weather procedures that will help provide protection against injury to our employees and customers, damage to property, and disruption of business operations. All employees are to become familiar with the provisions of this plan in an effort to make their responses automatic in the event of a possible fire or other emergency requiring evacuation.

2.0 Procedure for Emergency Evacuation and Sheltering

The first employee aware of a fire in the building is to alert other occupants by activating the fire alarm system.

All employees and other occupants of the County buildings shall evacuate the building immediately upon notification of a fire.

If you are in the vicinity of a fire when it is discovered, do not attempt to extinguish it unless you have been trained in the proper use of a portable fire extinguisher. If you have been trained and the fire is small in size, and it can be easily controlled without placing yourself or other building occupants in danger then use of the fire extinguisher is permissible.

In the event of a fire or emergency that requires evacuation of the building, each employee is to immediately close but do not lock office doors, and leave the building by the nearest available exit. If time permits and without placing an employee in danger, a call to the fire department is to be made by dialing 911 before evacuating the building. If time does not permit a call from the building, it is to be made outside from an available car phone, cellular phone, or neighboring business, by dialing 911 immediately after evacuating the building. In a multiple story building (i.e. Government Center), Department Heads are responsible for locking doors to outside entrance to secure against entry.

During the evacuation of a multi-story building, the stairwells are the main means of exit. **Elevators should NOT be used for emergency evacuation of a building.** NO employee is permitted to re-enter the building until advised that it is safe to do so by the Fire Department Commander.

Each Department Director and/or Supervisor(s) is/are responsible to assure that all handicapped employees and customers are assisted in evacuating the building.

Each Department will have at least two employees assigned to act as Emergency Coordinator to ensure all employees have responded appropriately to the emergency. The number of Emergency Coordinators is dependent on the size of the Department

Dial 911 for Fire Department or other Emergency Services.

Once outside the building, all employees are to assemble in the Department's meeting location where an accounting is to be made by each Department Director and/or Supervisor(s) to ensure all assigned employees have safely exited the building. The assembly area is to be at least 200 feet from the building, and in a safe area out of traffic. The identification of any missing individuals shall be reported to the Fire Department upon their arrival.

3.0 Procedure for Hazardous Material Spills

If a large spill occurs that requires evacuation, follow the procedures identified by emergency personnel (Emergency Management, Fire Department, Police Department, and Risk Management). Be aware that prior to evacuation, special procedures may need to be followed. This may include evacuating from a certain side of the building. This may also include turning off electrical power to the building. Once the spill has been cleaned-up, employees will be notified of procedures to follow for returning to work. This will be conducted face to face, via telephone and/or via radio. If the building sustains damage, restoration procedures will be addressed by the Department Director, Department Supervisor(s), County Manager, General Services Director, and Risk Management.

Spills of hazardous material substances can occur at any place and at any time.

A. *If Inside*

1. Avoid direct or indirect contact with the substance.

2. Evacuate the building if the situation requires. If shelter-in-place is the best action, close all windows and doors.

3. Contact off-site emergency response personnel (911).

4. If spilled material is known, attempt to locate Material Safety Data Sheets (MSDS) for product to give to emergency responders.

B. *If Outside*

1. Move upwind and uphill from the spill.

2. Contact off-site emergency response personnel (911).

4.0 Procedures for Tornadoes

When the weather is severe, all efforts will be made to listen for weather reports regarding the changing weather conditions in our area. If a tornado warning is issued by the activation of the CODE RED, all employees will be informed immediately through the intercom system and/or verbally within each department or departmental radios. Employees will be instructed to take shelter, when deemed appropriate, in low-lying areas (basements), bathrooms, closets, and/or hallways away from windows. Employees will be instructed to stay in their sheltered area until they are notified that it is clear.

If an injury has occurred, d**ial 911 immediately**.

If property damage has been sustained, appropriate safety measures will be addressed by the department director, department supervisor(s), and Risk Management to ensure that other employees are not injured due to debris (glass, metal) or other potential hazards (electrical shorts, flooding).

If required, restoration procedures will be addressed immediately by the department director and department Supervisor(s) to start the recovery process. This may include recovery of critical documents, computer backup tapes, and insurance policies; setting up a temporary location; identifying temporary payroll procedures; clean up of building; along with other key recovery procedures deemed necessary.

5.0 Procedure for Hurricanes/High Winds/Flooding

Preparations for the hazard are to be made within each department to protect employees from injury and to safeguard building & property. Depending on the hazard, preparations may include: backing up computers, storing critical documents, removing equipment/paper from areas known to flood, boarding up windows, and sending employees home before the weather becomes too serious.

Once the emergency passes, employees will be notified of procedures to follow for returning to work. This will be conducted face to face, via telephone, and/or via broadcast radio. If the building sustains damage, restoration procedures will be addressed by the department director, department supervisor(s), County Manager, and Risk Management

6.0 Other Hazardous Situations

6.1 Active Shooter Situation

1. RUN – Act quickly and calmly and escape to safety. Encourage others to follow your lead.
2. HIDE – Lock and barricade doors and shut off lights and silence cell phones. Try to remain calm and quiet. Stay away from doors and window.
3. FIGHT – Use only if your life is in imminent danger. Use objects like fire extinguisher's and chairs as weapons.
4. Call 911 when safe to do so. Once law enforcement arrives, obey all their commands.

6.2 Armed or Dangerous Person and other Law Enforcement Emergencies

1. Contact off-site emergency response personnel (911) and provide the following information:

a) Location of the incident.
b) Type of incident.
c) Number of injured (if known).
d) Number and location of intruders (if known).
e) Describe the intruders and weapons (if known).

2. Immediately begin lockdown procedures.

3. Remain in lockdown until an "ALL CLEAR" is given or until directed to another location by law enforcement.

6.3 Gas Leaks

Gas leaks are identified by an odor similar to rotten eggs. If a gas leak is detected, the following steps should be taken:

A. *If Inside*

1. Evacuate the areas/building as quickly as possible to the pre-determined high point remote from the building using basic evacuation procedures.
2. Do not turn on or off any electrical device including light switches.
3. Contact off-site emergency response personnel (911).

B. *If Outside*

1. Move upwind of gas odor.
2. Turn off all engines in the area.
3. Contact off-site emergency response personnel (911).

6.4 Bomb Threat Procedures

1. Record the telephone number located on the caller identification screen.
2. Obtain as much information as possible from the caller (bomb location, detonation time, group taking responsibility, reason, etc).
3. Gather as much information as possible about the caller's voice, accent, etc.

4. Immediately begin building evacuation.
5. Contact off-site emergency response personnel (911).
6. If a suspicious package or item is observed, DO NOT TOUCH.
7. Do not utilize any mobile communications device.
8. Employees may re-enter the building only when an "ALL CLEAR" is given by the Incident Commander.

6.5 Explosion

1. Evacuate the building as quickly as possible.
2. If things are falling around you, get under a desk or table until falling stops.
3. If you become trapped in debris:
   a) Do not light a match.
   b) Do not move about or stir up dust.
   c) Cover mouth with handkerchief or cloth.
   d) Rhythmically tap on a pipe or wall to alert rescuers of your location.
   e) Shout only as a last resort when you think someone can hear you.

6.6 Power Outage Procedures

1. Ensure that all equipment is in OFF mode.
2. If there is sufficient lighting with the power out, call Emergency Services, exit the building and go to your Department's designated meeting area.
3. If there is insufficient lighting to evacuate, call Emergency Services, remain calm, and await rescuers.

6.7 Serious Medical Emergencies / Injuries

1. Contact off-site emergency response personnel (911). If possible, have the following information:
   a) Location of the incident or the injured parties.
   b) Nature of the injury, cause, and severity.
   c) Victim's age and name, if possible.
   d) Any medical information known.
2. Contact emergency response staff in the building (if applicable).
3. Locate the nearest first aid kit.
4. Remain calm and composed; hysteria is contagious.
5. Keep all non-essential personnel away from the scene.
6. Do not move the injured person unless they are in a life-threatening environment.
7. Have someone meet emergency responders and lead them to the emergency.

7.0 Evacuation Assembly Locations

All employees are to evacuate at least 200 feet from the building. Supervisors must verify personnel count at the assembly area.

Lee County Building Evacuation Locations		
Building	**Group**	**Evacuate to**
Animal Control	All	Beside driveway at US 421
Bob Hales Recreation Center	All	Parking lot at 133 McIver Street, across from Yarborough's Ice Cream
Buggy Factory	Strategic Services/ Environmental Health	Grassy Area by Parking Lot
COLTS	All	Front of Building by Flagpole
DSS Finance Annex	All	Lower Carthage St - Parking lot

Lee County Building Evacuation Locations		
Building	**Group**	**Evacuate to**
Elections/Adult Probations	All	Employee Parking Lot or across street at Courtland Parking Lot
Enrichment Center	All	Employee parking lot, customer parking lot, or past the gazebo as appropriate
General Services	All	Employee parking lot
Government Center	Health	Across Hillcrest Dr. – Upper Center of employee parking lot
Government Center	Social Services – All	Lower Carthage St - Parking lot
Government Center	Tax	Across Hillcrest Dr. – Upper Center of employee parking lot
IT	All	Front of Building by Flag Pole
Juvenile Probation	All	Across Makepeace Street
Landfill	All	Equipment Yard
Library - Broadway	All	Parking lot
Library - Main	All	Church parking lot next door
McSwain Center	Cooperative Extension, Soil Conservation	Cooperative Extension Parking Lot
Main Courthouse	Clerk of Court	Across Courtland Drive
Main Courthouse	Emergency Management	Across Courtland Drive
Main Courthouse	Magistrate's Office	Across Courtland Drive
Main Courthouse	Sheriff	Across Elm Street
Main Courthouse	Jail	Courtyard
Old Courthouse	District Attorney's Office	Lower Courthouse parking lot
OT Sloan Pool House	All	Benches beside Parking Lot
OT Sloan Tennis Center	All	Benches beside Lower Parking Lot
Recreation - 221 Commercial Court	Gymnastics	Field beside Holiday Inn Express
Recreation Office	All	Rear of building
Register of Deeds	All	Parking Lot at Rear of Building
San Lee Park	All	Raptor Cage Area
Summit Building	All	Parking Lot

Lee County Building Evacuation Locations		
Building	**Group**	**Evacuate to**
Wellness Clinic	All	Across Hillcrest Dr. Upper Right of employee Parking Lot

8.0 Sheltering Locations

1. When sheltering in a County Building, employees should stay away from
   - Windows
   - Large open rooms
   - Areas that are likely to flood
   - Buildings that are not of solid masonry construction

2. When sheltering away from a County building, employees should
   - Go to the lowest safe area in a sturdy building away from windows
   - Stay away from
     - Mobile homes
     - Bridge underpasses
     - Ditches or low-lying areas that are likely to flood
   - Get in a low, open area, lie on your stomach, and protect your head if you are in the open

Lee County Building Shelter Locations		
Building	**Group**	**Shelter at**
Animal Control	All	Interior hallway away from windows, kitchen, supervisor's office
Bob Hales Recreation Center	All	Vault
Buggy Factory	Environmental Health/Strategic Services	Interior Hallway near restrooms
COLTS	All	Interior Office area away from windows
DSS Finance Annex	All	Basement Conference Room away from windows
Elections/Adult Probation	All	Interior hallway away from windows, office area, bathrooms
Enrichment Center	All	Interior hallway away from windows, office area, bathrooms
General Services	All	Interior hallway away from windows, map room, bathrooms
Government Center	Health - 2nd Floor	Interior hallways away from windows, First floor (Designated Area)

Lee County Building Shelter Locations		
Building	**Group**	**Shelter at**
Government Center	Health - 3rd Floor	Interior hallways away from windows, First floor (Designated Area)
Government Center	Social Services – 1st Floor	Interior hallways away from windows, First floor (Designated Area)
Government Center	Social Services – 4th Floor	Interior hallways away from windows, First floor (Designated Area)
Government Center	Tax	Interior hallways away from windows, First floor (Designated Area)
Juvenile Probation	All	Interior hallways away from windows
Information Technology	All	Interior Office area away from windows on bottom floor
Landfill	All	Evacuate all buildings
Library - Broadway	All	Evacuate
Library - Main	All	Interior hallways away from windows, bathrooms
McSwain Center	Cooperative Extension, Soil Conservation	Interior hallways away from windows, bathrooms
Main Courthouse	Clerk of Court	Basement
Main Courthouse	Emergency Management	Basement
Main Courthouse	Magistrate's Office	Basement
Main Courthouse	Sheriff	Shelter in place away from windows
Main Courthouse	Jail	Shelter in place
Old Courthouse	District Attorney's Office	Interior hallways downstairs away from windows
OT Sloan Pool House	All	Inside
OT Sloan Tennis Center	All	Evacuate to Fence Beside Tennis Courts
Recreation - 221 Commercial Court	Gymnastics	Bathrooms, Corner Next to Women's Bathroom
Recreation Office	All	Bathrooms, basement
Register of Deeds (Added)	All	Vault
San Lee Park	All	Interior hallways away from windows
Summit Building	All	Interior (Center) Hallway near Bathrooms
Wellness Clinic	All	Basement Conference Room away from Windows

9.0 Severe Weather Key Terms

As issued by the National Weather Service, the following are key terms in regards to severe weather:

a) Weather "Watch"

1. Weather conditions are favorable for severe weather to develop during the next 24-36 hours. No severe weather currently exists within Lee County; therefore, no action other than preparation is required at this time.

b) Weather "Warning"

1. Weather conditions have produced, or soon will produce, severe weather within Lee County. Immediate action should be taken to protect life and property.

c) Tornado "Warning"

1. Proceed to the designated safe area within your building.
2. If outside, return to the building and proceed to the safe area.
3. If you are outside and no shelter is available, find the lowest ground point, such as a ditch, and lie prone with hand overhead.
4. Stay away from windows and skylights.
5. Use "head tuck" position when appropriate to protect from flying object.
6. Remain in designated safe area until cleared by building administration.

d) Severe Thunderstorm "Warning"

1. If outside, return to building for protection and shelter.
2. If inside, stay away from windows in case high gusty winds occur with the storm, which may cause windows to break.

e) Winter Storm "Warning"

1. Issuance of a winter storm warning indicates some form of frozen participation (snow, sleet, freezing rain, etc.) is occurring, or will soon occur, within Lee County which will provide significant accumulation of frozen precipitation.
2. Remain indoors. County Administration will make decision in regards to closings.

10.0 FACILITY EMERGENCY CODES

Lee County has established a system for employee emergency notifications utilizing color codes.

Announcement: **Code Red (Evacuate)**
Action: **Call 911**
Description:

Bomb Threat/Suspicious Package - Ensure that your exit path and assembly area outside are free of suspicious packages. Do not move anything that looks suspicious and notify law enforcement.

Hazardous Materials - Ensure that you are evacuating upwind from the hazard.

Fire - Ensure that the area is clear of all staff and visitors; ***close but do not lock*** all office doors.

Announcement: **Code Orange (Lock Down) – *Location* or Code Orange (Weather)**
Action: **Call 911 for assault/intruder / Shelter-In-Place for weather**
Description:

Assault / Intruder - Make sure that you know the area where the assault or intruder is located. If in your office, lock your door and turn off your lights and hide where you cannot be seen from the door. If away from your office, stay away from the location identified and seek shelter in another office immediately. Make sure to shelter your customers and protect them.

Weather Warning – Go to your designated shelter location and stay away from outside doors and windows.

Announcement: **Code Yellow (Caution) - Location or Code Yellow (Weather Alert)**
Action: **Be prepared to escalate to Code Orange and call 911**
Description:

Irate / Threatening Behavior – Be alert to listen for instructions and prepare to take protective actions. Code Yellow can escalate to a Code Orange quickly. Stay away from the location identified.
Weather – The possibility for severe weather exists. Make sure you can hear your weather alert radio and be prepared to take protective actions if required.

-Announcement: **Code Green (All Clear)**
Action: **Return to your normal work location and schedule**
Description:

Administration – Must declare "all-clear" for Code Yellow

Law Enforcement - Must declare "all-clear" for Code Orange (Assault, Intruder and Threatening Behavior) and Code Red (Bomb Threat)

Fire Department – Must declare "all-clear" for Code Red (Fire and Hazardous Materials)

11.0 Departmental Emergency Action Plans

Each Department is to create and maintain a Departmental Emergency Action Plan that addresses, at a minimum, Evacuations and Sheltering. Designation and appointment of the two or more Emergency Coordinators will be made, and the information will be forwarded to Risk Management. Training will be given to the designated Emergency Coordinators. The Departmental plan's complexity is dependent on the number of employees in the department and the physical locations(s) of the department's employees, and the potential risk exposures to the employees. The departmental plan is to be approved by Risk Management and a copy will be maintained by Risk Management.

12.0 Employee Training

Provisions of the County Emergency Action Plan will be reviewed as part of new employee orientation.

Provisions of the Departmental Emergency Action Plan will be reviewed by a Supervisor within the first week of employment.

Provisions of both of the Emergency Action Plans will be reviewed with all assigned employees annually by the Department Supervisor and:

- when an employee's designated actions per the plan change, or
- when the plan is updated or changed.

Records of this training should be maintained in the County Safety Training Database showing the review date, employee name, and person conducting the review.

A copy of the Department written plan is to be kept on file and available for review.

TABLE OF CONTENTS

Number: A-1	Revision: 31	Effective Date: 02/21/2022	Pages: 5

Manual for Personnel Administration

Policy No.	Policy Title	Rev.	Effective Date
A-1	Table of Contents	26	01/21/2020
A-2	Organization of Personnel System	2	04-27-2008

General Employment Practices

Policy No.	Policy Title	Rev.	Effective Date
B-1	Privacy of Employee Records	1	10-01-2010
B-2	Political Activity		07-01-2006
B-3	Inclement Weather/State of Emergency	3	10-15-2018
B-4	Recruitment and Selection	1	04-27-2008
B-5	Vehicle Usage		07-01-2006
B-6	Outside Employment	1	04-27-2008
B-7	Limitations on Employment of Relatives		07-01-2006
B-8	Identification Badge Policy	1	04-27-2008
B-9	Gifts and Favors	1	03-06-2017
B-10	Employee Travel	2	08-16-2010
B-11	Flex Time Work Schedule		07-01-2006
B-12	Workplace Violence	1	04-27-2008

B-13	Small Pox Vaccination		07-01-2006
B-14	Technology Use Policy	1	10-04-2010
B-15	Code of Ethics		07-01-2006
B-16	Work Week	1	04-27-2008
B-17	Work Period	1	04-27-2008
B-18	Drug and Alcohol Free Workplace Policy	6	03/01/2021
B-19	Employee Development	1	04-27-2008
B-20	Collection of Social Security Number		07-01-2006
B-21	Concealed Carry – Employee Policy		09-16-2019

Position Management

Policy No.	Policy Title	Rev.	Effective Date
C-1	Classification Plan		07-01-2006
C-2	Maintenance of the Classification Plan		07-01-2006
C-3	Compensation Philosophy		07-01-2006

Pay Administration

Policy No.	Policy Title	Rev.	Effective Date
D-1	Longevity Pay	1	07-01-2007
D-2	Pay Plan	4	07-01-2020
D-3	Overtime Compensation	4	10-15-2018
D-4	Special Compensation	1	04-27-2018

Employee Benefits

Policy No.	Policy Title	Rev.	Effective Date
E-1	Employee Benefits	3	07-01-2011
E-2	Health Insurance Portability and Accountability Act Privacy Policy		03-01-2010

Leaves of Absence

Policy No.	Policy Title	Rev.	Effective Date
F-1	Vacation	2	02-16-2009
F-2	Sick Time	2	02-16-2009
F-3	Holidays	3	02-16-2009
F-4	Family and Medical Leave	5	04-06-2015
F-5	Court and Jury Duty		07-01-2006
F-6	Military Leave		07-01-2006
F-7	Worker's Compensation Leave	2	07-19-2010
F-8	Leave Without Pay	3	02-16-2009
F-9	Educational Leave with Pay		07-01-2006
F-10	Voluntary Shared Time	1	04-27-2008
F-11	Parental School Leave		07-01-2006
F-12	Personal Leave Associated with Pandemic	1	04/01/2020
F-13	Emergency Paid Sick Leave		04/01/2020
F-14	Family Medical Leave Expansion Under the Families First Coronavirus Response Act		04/01/2020

Employee Development

Policy No.	Policy Title	Rev.	Effective Date
G-1	Training and Development		07-01-2006

Employee Relations

Policy No.	Policy Title	Rev.	Effective Date
H-1	Disciplinary Action		07-01-2006
H-2	Grievance Policy	1	04-27-2008
H-3	Workplace Harassment		07-01-2006
H-4	Resignation	1	04-27-2008
H-5	Reduction in Force	1	03-16-2009
H-6	Retirement	1	04-27-2008
H-7	Separation for Disability		07-01-2006
H-8	Dismissal	1	04-27-2008

Employee Safety and OSHA

Policy No.	Policy Title	Rev.	Effective Date
J-1	Safety and Health Policy Statement		09-21-2009
J-2	County Manager's Statement		09-21-2009
J-3	Safety and Health Responsibilities		09-21-2009
J-4	County Safety Committee		09-21-2009
J-5	Departmental Safety Committee		09-21-2009
J-6	Training		09-21-2009
J-7	Emergency Response	3	02/21/2022
J-8	Workplace Illness and Accident Reporting	1	02-18-2019

J-9	First Aid		09-21-2009
J-10	Medical Surveillance		09-21-2009
J-11	Fire Prevention Policy		09-21-2009
J-12	Motor Vehicle Policy		09-21-2009
J-13	Bloodborne Pathogens		09-21-2009
J-14	Biological Hazards		09-21-2009
J-15	General Housekeeping and Sanitation		09-21-2009
J-16	Office Safety		09-21-2009
J-17	Safe Lifting		09-21-2009
J-18	Falls		09-21-2009
J-19	Ergonomics		09-21-2009
J-20	Personal Protective Equipment		09-21-2009
J-21	Confined Space		09-21-2009
J-22	Electrical Safety		09-21-2009
J-23	Portable Ladders and Scaffold		09-21-2009
J-24	Machine Guarding		09-21-2009
J-25	Powered Industrial Trucks/Material Handling		09-21-2009
J-26	Tools		09-21-2009
J-27	Noise		09-21-2009
J-28	Trenching and Excavation		09-21-2009
J-29	Hazards Communication		09-21-2009
J-30	Control of Hazardous Energy		09-21-2009
J-31	Bench Grinder		09-21-2009
J-32	Asbestos		09-21-2009
J-33	Accident Review	1	01/21/2020
J-34	Transitional Duty Policy		07-19-2010

Appendix

Emergency Response Policy

Number: J-7	Revision: 3	Effective Date: 02/21/2022	Pages: 9

1.0 Policy/Procedure

This Emergency Action Plan is intended to provide guidelines on general evacuation and means of egress along with severe weather procedures that will help provide protection against injury to our employees and customers, damage to property, and disruption of business operations. All employees are to become familiar with the provisions of this plan in an effort to make their responses automatic in the event of a possible fire or other emergency requiring evacuation.

2.0 Procedure for Emergency Evacuation and Sheltering

The first employee aware of a fire in the building is to alert other occupants by activating the fire alarm system.

All employees and other occupants of the County buildings shall evacuate the building immediately upon notification of a fire.

If you are in the vicinity of a fire when it is discovered, do not attempt to extinguish it unless you have been trained in the proper use of a portable fire extinguisher. If you have been trained and the fire is small in size, and it can be easily controlled without placing yourself or other building occupants in danger then use of the fire extinguisher is permissible.

In the event of a fire or emergency that requires evacuation of the building, each employee is to immediately close but do not lock office doors, and leave the building by the nearest available exit. If time permits and without placing an employee in danger, a call to the fire department is to be made by dialing 911 before evacuating the building. If time does not permit a call from the building, it is to be made outside from an available car phone, cellular phone, or neighboring business, by dialing 911 immediately after evacuating the building. In a multiple story building (i.e. Government Center), Department Heads are responsible for locking doors to outside entrance to secure against entry.

During the evacuation of a multi-story building, the stairwells are the main means of exit. **Elevators should NOT be used for emergency evacuation of a building.** NO employee is permitted to re-enter the building until advised that it is safe to do so by the Fire Department Commander.

Each Department Director and/or Supervisor(s) is/are responsible to assure that all handicapped employees and customers are assisted in evacuating the building.

Each Department will have at least two employees assigned to act as Emergency Coordinator to ensure all employees have responded appropriately to the emergency. The number of Emergency Coordinators is dependent on the size of the Department

Dial 911 for Fire Department or other Emergency Services.

Once outside the building, all employees are to assemble in the Department's meeting location where an accounting is to be made by each Department Director and/or Supervisor(s) to ensure all assigned employees have safely exited the building. The assembly area is to be at least 200 feet from the building, and in a safe area out of traffic. The identification of any missing individuals shall be reported to the Fire Department upon their arrival.

3.0 Procedure for Hazardous Material Spills

If a large spill occurs that requires evacuation, follow the procedures identified by emergency personnel (Emergency Management, Fire Department, Police Department, and Risk Management). Be aware that prior to evacuation, special procedures may need to be followed. This may include evacuating from a certain side of the building. This may also include turning off electrical power to the building. Once the spill has been cleaned-up, employees will be notified of procedures to follow for returning to work. This will be conducted face to face, via telephone and/or via radio. If the building sustains damage, restoration procedures will be addressed by the Department Director, Department Supervisor(s), County Manager, General Services Director, and Risk Management.

Spills of hazardous material substances can occur at any place and at any time.

A. *If Inside*

1. Avoid direct or indirect contact with the substance.

2. Evacuate the building if the situation requires. If shelter-in-place is the best action, close all windows and doors.

3. Contact off-site emergency response personnel (911).

4. If spilled material is known, attempt to locate Material Safety Data Sheets (MSDS) for product to give to emergency responders.

B. *If Outside*

1. Move upwind and uphill from the spill.

2. Contact off-site emergency response personnel (911).

4.0 Procedures for Tornadoes

When the weather is severe, all efforts will be made to listen for weather reports regarding the changing weather conditions in our area. If a tornado warning is issued by the activation of the Weather Radios, all employees will be informed immediately through the intercom system and/or verbally within each department or departmental radios. Employees will be instructed to take shelter, when deemed appropriate, in low-lying areas (basements), bathrooms, closets, and/or hallways away from windows. Employees will be instructed to stay in their sheltered area until they are notified that it is clear.

If an injury has occurred, d**ial 911 immediately**.

If property damage has been sustained, appropriate safety measures will be addressed by the department director, department supervisor(s), and Risk Management to ensure that other employees are not injured due to debris (glass, metal) or other potential hazards (electrical shorts, flooding).

If required, restoration procedures will be addressed immediately by the department director and department Supervisor(s) to start the recovery process. This may include recovery of critical documents, computer backup tapes, and insurance policies; setting up a temporary location; identifying temporary payroll procedures; clean up of building; along with other key recovery procedures deemed necessary.

5.0 Procedure for Hurricanes/High Winds/Flooding

Preparations for the hazard are to be made within each department to protect employees from injury and to safeguard building & property. Depending on the hazard, preparations may include: backing up computers, storing critical documents, removing equipment/paper from areas known to flood, boarding up windows, and sending employees home before the weather becomes too serious.

Once the emergency passes, employees will be notified of procedures to follow for returning to work. This will be conducted face to face, via telephone, and/or via broadcast radio. If the building sustains damage, restoration procedures will be addressed by the department director, department supervisor(s), County Manager, and Risk Management

6.0 Other Hazardous Situations

6.1 Active Shooter Situation

1. RUN – Act quickly and calmly and escape to safety. Encourage others to follow your lead.
2. HIDE – Lock and barricade doors and shut off lights and silence cell phones. Try to remain calm and quiet. Stay away from doors and window.
3. FIGHT – Use only if your life is in imminent danger. Use objects like fire extinguisher's and chairs as weapons.
4. Call 911 when safe to do so. Once law enforcement arrives, obey all their commands.

6.2 Armed or Dangerous Person and other Law Enforcement Emergencies

1. Contact off-site emergency response personnel (911) and provide the following information:

a) Location of the incident.
b) Type of incident.
c) Number of injured (if known).
d) Number and location of intruders (if known).
e) Describe the intruders and weapons (if known).

2. Immediately begin lockdown procedures.

3. Remain in lockdown until an "ALL CLEAR" is given or until directed to another location by law enforcement.

6.3 Gas Leaks

Gas leaks are identified by an odor similar to rotten eggs. If a gas leak is detected, the following steps should be taken:

A. *If Inside*

1. Evacuate the areas/building as quickly as possible to the pre-determined high point remote from the building using basic evacuation procedures.
2. Do not turn on or off any electrical device including light switches.
3. Contact off-site emergency response personnel (911).

B. *If Outside*

1. Move upwind of gas odor.
2. Turn off all engines in the area.
3. Contact off-site emergency response personnel (911).

6.4 Bomb Threat Procedures

1. Record the telephone number located on the caller identification screen.

2. Obtain as much information as possible from the caller (bomb location, detonation time, group taking responsibility, reason, etc).
3. Gather as much information as possible about the caller's voice, accent, etc.
4. Immediately begin building evacuation.
5. Contact off-site emergency response personnel (911).
6. If a suspicious package or item is observed, DO NOT TOUCH.
7. Do not utilize any mobile communications device.
8. Employees may re-enter the building only when an "ALL CLEAR" is given by the Incident Commander.

6.5 Explosion

1. Evacuate the building as quickly as possible.
2. If things are falling around you, get under a desk or table until falling stops.
3. If you become trapped in debris:
   a) Do not light a match.
   b) Do not move about or stir up dust.
   c) Cover mouth with handkerchief or cloth.
   d) Rhythmically tap on a pipe or wall to alert rescuers of your location.
   e) Shout only as a last resort when you think someone can hear you.

6.6 Power Outage Procedures

1. Ensure that all equipment is in OFF mode.
2. If there is sufficient lighting with the power out, call Emergency Services, exit the building and go to your Department's designated meeting area.
3. If there is insufficient lighting to evacuate, call Emergency Services, remain calm, and await rescuers.

6.7 Serious Medical Emergencies / Injuries

1. Contact off-site emergency response personnel (911). If possible, have the following information:
   a) Location of the incident or the injured parties.
   b) Nature of the injury, cause, and severity.
   c) Victim's age and name, if possible.
   d) Any medical information known.
2. Contact emergency response staff in the building (if applicable).
3. Locate the nearest first aid kit.
4. Remain calm and composed; hysteria is contagious.
5. Keep all non-essential personnel away from the scene.
6. Do not move the injured person unless they are in a life-threatening environment.
7. Have someone meet emergency responders and lead them to the emergency.

7.0 Evacuation Assembly Locations

All employees are to evacuate at least 200 feet from the building. Supervisors must verify personnel count at the assembly area.

Lee County Building Evacuation Locations		
Building	**Group**	**Evacuate to**
Animal Control	All	Beside driveway at US 421.
Bob Hales Recreation Center	All	Parking lot at 133 McIver Street, across from Yarborough's Ice Cream
Buggy Factory	Strategic Services/Environmental Health	Grassy Area by Parking Lot

Lee County Building Evacuation Locations		
Building	**Group**	**Evacuate to**
COLTs	All	Front of Building by Flagpole
DSS Finance Annex	All	Lower Carthage Street Parking Lot
Elections/ Adult Probations	All	Employee parking lot or across street at Courtland
Enrichment Center	All	Employee parking lot, customer parking lot, or past the gazebo as appropriate
General Services	All	Employee parking lot
Government Center	Health	Across Hillcrest Dr. – Upper Center of employee parking lot
Government Center	Information Technology	Across Hillcrest Dr. – Upper Left of employee parking lot
Government Center	Social Services – All	Lower Carthage St - Parking lot
Government Center	Tax	Across Hillcrest Dr. – Upper Center of employee parking lot
Information Technology	All	Front of Building by Flagpole
Juvenile Probation	All	Across Makepeace Street
Landfill	All	Equipment Yard
Library - Broadway	All	Parking lot
Library - Main	All	Church parking lot next door
McSwain Center	Cooperative Extension, Soil Conservation	Cooperative Extension Parking Lot
Main Courthouse	Clerk of Court	Across Courtland Drive
Main Courthouse	District Attorney's Office	Across Courtland Drive
Main Courthouse	Emergency Management	Across Courtland Drive
MainCourthouse	Magistrate's Office	Across Courtland Drive
Main Courthouse	Sheriff	Across Elm Street
Main Courthouse	Jail	Courtyard
Old Courthouse	District Attorney's Office	Lower Courthouse parking lot
OT Sloan Pool House	All	Benches beside Parking Lot
OT Sloan Tennis Center	All	Benches beside Lower Parking Lot

Lee County Building Evacuation Locations		
Building	**Group**	**Evacuate to**
Recreation - 221 Commercial Court	Gymnastics	Field beside Holiday Inn Express
Recreation Office	All	Rear of building
Register of Deeds	All	Parking Lot at Rear of Building
San Lee Park	All	Raptor Cage Area
Summit Building	All	Parking Lot
Wellness Clinic	All	Across Hillcrest Dr. Upper Right of Employees Parking Lot

8.0 Sheltering Locations

1. When sheltering in a County Building, employees should stay away from
   - Windows
   - Large open rooms
   - Areas that are likely to flood
   - Buildings that are not of solid masonry construction

2. When sheltering away from a County building, employees should
   - Go to the lowest safe area in a sturdy building away from windows
   - Stay away from
     - Mobile homes
     - Bridge underpasses
     - Ditches or low lying areas that are likely to flood
   - Get in a low, open area, lie on your stomach, and protect your head if you are in the open

Lee County Building Shelter Locations		
Building	**Group**	**Shelter at**
Animal Control	All	Interior hallway away from windows, kitchen, supervisor's office
Bob Hales Recreation Center	All	Vault
Buggy Factory	Environment Health/Strategic Services	Interior Hallway near Restrooms
COLTS	All	Interior Office area away from windows
DSS Finance Annex	All	Basement Conference Room away from windows

Lee County Building Shelter Locations		
Building	**Group**	**Shelter at**
Elections/Adult Probation	All	Interior hallway outside Elections away from windows, bathrooms, basement
Enrichment Center	All	Interior hallway away from windows, office area, bathrooms
General Services	All	Interior hallway away from windows, map room, bathrooms
Government Center	Health - 2nd Floor	Interior hallways away from windows, First floor (Designated Area)
Government Center	Health - 3rd Floor	Interior hallways away from windows, First floor (Designated Area)
Government Center	Information Technology	Interior hallways away from windows, First floor (Designated Area)
Government Center	Social Services – 1st Floor	Interior hallways away from windows, First floor (Designated Area)
Government Center	Social Services – 4th Floor	Interior hallways away from windows, First floor (Designated Area)
Government Center	Tax	Interior hallways away from windows, First floor (Designated Area)
Innovation Center	All	Interior offices and hallways away from windows – First Floor
Information Technology	All	Interior Office area away from windows on bottom floor
Juvenile Probation	All	Interior hallways away from windows
Landfill	All	Evacuate all buildings
Library - Broadway	All	Evacuate
Library - Main	All	Interior hallways away from windows, bathrooms
McSwain Center	Cooperative Extension, Soil Conservation	Interior hallways away from windows, bathrooms
Main Courthouse	Clerk of Court	Basement
MainCourthouse	District Attorney's Office	Basement
Main Courthouse	Emergency Management	Basement
Main Courthouse	Magistrate's Office	Basement
MainCourthouse	Sheriff	Shelter in place away from windows
Main Courthouse	Jail	Shelter in place

Lee County Building Shelter Locations		
Building	**Group**	**Shelter at**
Old Courthouse	District Attorney's Office	Interior hallways downstairs away from windows
OT Sloan Pool House	All	Inside
OT Sloan Tennis Center	All	Evacuate to Fence Beside Tennis Courts
Recreation - 221 Commercial Court	Gymnastics	Bathrooms, Corner Next to Women's Bathroom
Recreation Office	All	Bathrooms, basement
San Lee Park	All	Interior hallways away from windows
Summit Building	Administration, Finance, Human Resources, Strategic Services, Animal Control	Interior (Center) Hallway near Bathrooms
Wellness Clinic	All	Basement Conference Room away from Windows

9.0 Severe Weather Key Terms

As issued by the National Weather Service, the following are key terms in regards to severe weather:

a) Weather "Watch"

1. Weather conditions are favorable for severe weather to develop during the next 24-36 hours. No severe weather currently exists within Lee County; therefore, no action other than preparation is required at this time.

b) Weather "Warning"

1. Weather conditions have produced, or soon will produce, severe weather within Lee County. Immediate action should be taken to protect life and property.

c) Tornado "Warning"

1. Proceed to the designated safe area within your building.
2. If outside, return to the building and proceed to the safe area.
3. If you are outside and no shelter is available, find the lowest ground point, such as a ditch, and lie prone with hand overhead.
4. Stay away from windows and skylights.
5. Use "head tuck" position when appropriate to protect from flying object.
6. Remain in designated safe area until cleared by building administration.

d) Severe Thunderstorm "Warning"

1. If outside, return to building for protection and shelter.
2. If inside, stay away from windows in case high gusty winds occur with the storm, which may cause windows to break.

e) Winter Storm "Warning"

1. Issuance of a winter storm warning indicates some form of frozen participation (snow, sleet, freezing rain, etc.) is occurring, or will soon occur, within Lee County which will provide significant accumulation of frozen precipitation.
2. Remain indoors. County Administration will make decision in regards to closings.

10.0 FACILITY EMERGENCY CODES

Lee County has established a system for employee emergency notifications utilizing color codes.

Announcement: **Code Red (Evacuate)**
Action: **Call 911**
Description:

Bomb Threat/Suspicious Package - Ensure that your exit path and assembly area outside are free of suspicious packages. Do not move anything that looks suspicious and notify law enforcement.

Hazardous Materials - Ensure that you are evacuating upwind from the hazard.

Fire - Ensure that the area is clear of all staff and visitors; ***close but do not lock*** all office doors.

Announcement: **Code Orange (Lock Down) – *Location* or Code Orange (Weather)**
Action: **Call 911 for assault/intruder / Shelter-In-Place for weather**
Description:

Assault / Intruder - Make sure that you know the area where the assault or intruder is located. If in your office, lock your door and turn off your lights and hide where you cannot be seen from the door. If away from your office, stay away from the location identified and seek shelter in another office immediately. Make sure to shelter your customers and protect them.

Weather Warning – Go to your designated shelter location and stay away from outside doors and windows.

Announcement: **Code Yellow (Caution) - Location or Code Yellow (Weather Alert)**
Action: **Be prepared to escalate to Code Orange and call 911**
Description:

Irate / Threatening Behavior – Be alert to listen for instructions and prepare to take protective actions. Code Yellow can escalate to a Code Orange quickly. Stay away from the location identified.
Weather – The possibility for severe weather exists. Make sure you can hear your weather alert radio and be prepared to take protective actions if required.

-Announcement: **Code Green (All Clear)**
Action: **Return to your normal work location and schedule**

Description:

Administration – Must declare “all-clear” for Code Yellow

Law Enforcement - Must declare “all-clear” for Code Orange (Assault, Intruder and Threatening Behavior) and Code Red (Bomb Threat)

Fire Department – Must declare “all-clear” for Code Red (Fire and Hazardous Materials)

11.0 Departmental Emergency Action Plans

Each Department is to create and maintain a Departmental Emergency Action Plan that addresses, at a minimum, Evacuations and Sheltering. Designation and appointment of the two or more Emergency Coordinators will be made, and the information will be forwarded to Risk Management. Training will be given to the designated Emergency Coordinators. The Departmental plan’s complexity is dependent on the number of employees in the department and the physical locations(s) of the department’s employees, and the potential risk exposures to the employees. The departmental plan is to be approved by Risk Management and a copy will be maintained by Risk Management.

12.0 Employee Training

Provisions of the County Emergency Action Plan will be reviewed as part of new employee orientation.

Provisions of the Departmental Emergency Action Plan will be reviewed by a Supervisor within the first week of employment.

Provisions of both of the Emergency Action Plans will be reviewed with all assigned employees annually by the Department Supervisor and:

- when an employee's designated actions per the plan change, or
- when the plan is updated or changed.

Records of this training should be maintained in the County Safety Training Database showing the review date, employee name, and person conducting the review.

A copy of the Department written plan is to be kept on file and available for review.

ITEM #: II.F

LEE COUNTY AGENDA ABSTRACT
BOARD OF COMMISSIONERS - REGULAR

MEETING DATE: February 21, 2022

SUBJECT: Kimble's Commissary Contract

DEPARTMENT: Sheriffs Department

CONTACT PERSON: Kim Kruger, Lt - Jail

TYPE: Consent Agenda

REQUEST	Approve Amendment #3 to Kimble's Commissary contract to provide commissary services to inmates in the Lee County Jail
BUDGET IMPACT	Commissary produces revenue at 32.5% of total inmate purchases
ATTACHMENTS	KIMBLES ORIGINAL CONTRACT.pdf Contract Amendment 2-14-2022.pdf
PRIOR BOARD ACTION	Approval of Third Amendment
RECOMMENDATION	Approve third amendment as presented.
SUMMARY	

The Lee County Jail wishes to continue our partnership with Kimble's Commissary.

`43Commissary Service Agreement
Kimble's Commissary Services/Lee County N.C.

This Commissary Service Agreement ("Agreement") is by and between the Lee County NC ("Customer") and Kimble's Food By Design ("Kimble's").

Customer desires and Kimble's agrees to provide certain Commissary Services to the inmates housed in the Lee County Jail ("Facility") and to provide the software and equipment necessary to render such services.

Now therefore, in consideration of the mutual promises and covenants contained herein, the parties agree as follows:

1. **Scope of Services.**

(a) Customer grants Kimble's the **sole and exclusive** right to:

(i) sell products and services to inmates of the Facility including but not limited to personal care items, beauty products, toiletries, clothing, food, email access, and related products. Customer will not use the Kimble's system or the "Lockdown" software to facilitate the sale of products or services to inmates without the agreement of both parties. All products and services sold to inmates will be listed on a menu agreed upon by Customer and Kimble's. The prices of these products and services will be reviewed at least annually and agreed upon by Customer and Kimble's. Both parties agree that fluctuation in market prices may require price adjustments on individual products or services at intervals more frequently than once each year. Kimble's shall be responsible for payment of all applicable taxes on products or services purchased by inmates. The pricing on menus presented to inmates to purchase goods and services shall include all applicable taxes.

(ii) sell products on Kimble's website for purchase by friends and family of inmates which will be delivered to a designated inmate ("Care Pack Services Program) . Customer will not use the Kimble's system or the "Lockdown" software to facilitate the sale of products or services to friends and family of inmates without the agreement of both parties.-All products sold through the Care Pack Services program will be listed on a menu agreed upon by Customer and Kimble's. Additionally Kimble's will provide "Snack Packs" to the customer that will be sold between commissary orders. The prices of these products will be reviewed at least annually and agreed upon by Customer and Kimble's. Both parties agree that fluctuation in market prices may require price adjustments on individual products at intervals more frequently than once each year. Kimble's shall be responsible for payment of all applicable taxes on products or services purchased through the Care Pack Services Program. The pricing reflected on the Care Pack Services Program and "Snack Pack" menu shall include all applicable taxes..

(iii) accept and maintain deposits into inmate trust accounts via web, lobby kiosk, or any other type of deposit service instituted by Kimble's. Customer will not permit, allow or accept deposits into inmate trust accounts through any party other than Kimble's.

(iv) install and maintain the software and equipment necessary to sell commissary products and services to inmates of the Facility. Customer may not resell any of the software or equipment including any of the applications related thereto or provide access to such applications directly or indirectly to third parties. Customer shall not use any of Kimble's software, equipment or related applications to facilitate the sale of any product or service to inmates except as approved by Kimble's.

(v) install and operate financial kiosks designed for the purpose of funding inmate accounts. Customer shall not allow any party other than Kimble's to install or maintain a financial kiosk at the Facility except ATM's provided by a financial institution and designed to exchange cash for credit/debit card usage.

(b) In order to provide the services specified herein, Kimble's agrees to provide Customer:

(i) Access to and use of "*Lockdown*" jail inmate financial management software.

(ii) Inmate Release Debit Cards. No fees will be charged on any debit card issued to a released inmate if the debit card balance is used or otherwise withdrawn by the inmate within two (2) days of release (Kimble's cannot control transaction fees charged by merchants such as ATM fees).

(iii) Equipment to write checks to inmates for the balance held in the inmate's trust account.

(iv) One Jail ATM Lobby Kiosk capable of accepting cash, credit and debit cards. Kimble's will collect a $3.00 transaction fee for cash transactions and a 10% deposit transaction fee with a $3.25 minimum for each credit/debit card transaction. Kimble's will insure that all fees charged are in compliance with all Federal and State laws.

(v) One Booking Manager Kiosk capable of taking bills and coins from arrestees and immediately place collected funds in the arrestees trust fund account. (no user fees will be charged).

(vi) A portal for Web Deposits at www.jailatm.com. Kimble's will collect a 10% deposit transaction fee with a $3.25 minimum for each transaction. Kimble's will insure that all fees charged are in compliance with all Federal and State laws.

(vii) Patent-Pending Swipe at Booking Technology allowing inmates to add funds to their commissary account using their credit/debit card accounts. Kimble's will collect a 10% deposit transaction fee with a $3.25 minimum for each transaction. Kimble's will insure that all fees charged are in compliance with all Federal and State laws.

(viii) provide seven (7) dormitory kiosks, ten (10) dormitory tablets with chargers for use by inmates to order commissary, check account balances, send and receive electronic email and email attachments, read mail processed through the mail scan system, distance video visitation, access information such as inmate handbooks, electronic messaging for such activities as visitation scheduling, requesting medical and dental appointments, filing grievances, inmate requests and other communication processes with facility staff as needed.

(ix) Commissary by phone as a backup to the dormitory kiosks.

(x) Training, Technical and accounting support at no cost.

(xi) Twenty Four (24) hour monitoring of on-site equipment to ensure proper operation.

(xii) Inventory of personal care items, beauty products, toiletries, clothing, food, and related products for sale to the inmates.

(xiii) Software necessary to administer the processing of inmate commissary orders as well as printers and other related equipment for the commissary process. Sufficient POS, check writing, and report printers will be provided to support the commissary and trust fund accounting processes.

(xiv) A portal on the Jailatm Website for the Care Pack Services Program. Commission will be paid to the Facility on all sales.

(xv) A portal on the Jailatm website allowing friends and family to send and receive electronic messages from inmates. Kimble's will collect a fee of $0.50 for each message sent or received.

(xvi) Kimble's will provide debit calling service through Customer's inmate telephone provider at no charge to the Customer. Inmates will be charged a $.50 transaction fee per transaction regardless of the amount of funds transferred..

(xvii) the Customer will be provided the investigative tools contained in the Lockdown software and related features at no charge.

(xviii) Kimble's will insure that any and all fees charged are in compliance with all federal and state laws.

(xix) Kimble's will maintain a relationship with your current or any future Jail Management System provider to allow connection between Customer's Jail Management System and its Lockdown software. Kimble's shall be responsible for any and all costs of said relationship. Kimble's will maintain a relationship with Securus or any future provider to provide debit calling and commissary by phone services to inmates at no cost to the county.

(xx) Kimble's will provide two administrative PC's for use by the trust fund administrator and the booking manager kiosk. Kimble's will provide a Renovo "Thinkserver" model RS160-1U rack mount server or similar tower mount server if requested by the county. This server will house the Kimble's commissary software.

(c) In order for Kimble's to provide the services specified herein, Customer agrees that:

(i) All workstations for administrative and book in processing use by staff shall meet the following minimum requirements:

	Workstation Requirements:
Processor	1 GHz or faster Intel or AMD processor, 32- or 64 -bit
Operating System	Microsoft Windows 7, 8, 8.1, 10, or higher
Browser	Microsoft Internet Explorer 11 or higher required for JailATM.com. Google Chrome or Microsoft Edge Recommended
Memory	1GB Ram (32-bit system) or 2GB Ram (64-bit system). 4 GB or higher recommended.
Disk Space	150MB
Display	VGA, 1024 x 768 resolution or higher
	Network Requirements
Internet Service	Broadband internet service required
Local Network	Access to local shared subnet required for multiple Lockdown instances in the same facility

(ii) Customer shall ensure that there is 110V service at the installation point of each pod kiosk.

(iii) Customer shall ensure that there is a location for the placement of the Kimble's computer server at the Cat5/6 termination point for connectivity to the lobby kiosk.

(iv) Customer shall ensure reasonable access to the facility to Kimble's personnel to service equipment.

(v) Customer shall ensure that there is High Speed internet service for use with the Kimble's Server and sufficient internal static IP addresses for the Kimble's equipment.

(vi) Customer will provide reasonable workspace for Kimble's Associates

(vii) Customer shall provide a lobby location for the lobby kiosk reasonably situated to facilitate public access.

(viii) Customer shall provide a reasonable level of security for the lobby kiosks and all other equipment owned by Kimble's. If any of Kimble's equipment is vandalized or damaged by an inmate, then Customer agrees to cooperate with Kimble's to seek prosecution of the responsible inmate for such damages.

(ix) Customer shall provide a reasonable level of security for the safety of all Kimble's employees carrying out duties at the Facility.

(x) Customer is responsible for regular reconciliation of financial records maintained on the software provided by Kimble's including but not limited to inmate trust accounts. Kimble's recommends that such records be reconciled monthly by an individual trained in accounting and not by any person responsible for daily entry of financial data.

2. **Term.** The "Term" of this Agreement shall commence on _____, 2018 and will continue for one (1) year thereafter. Notwithstanding anything to the contrary, the terms and conditions of this Agreement shall continue to apply for so long as Kimble's continues to provide services hereunder to Customer after the expiration or termination of this Agreement.

3. **Commissions Paid to Customer.** Kimble's shall pay a commission of 32.5% to Customer on the gross sales of all products purchased by inmates of the Facility and all products purchased through the Care Pack Services Program less applicable taxes. Additionally Kimble's will pay the Customer a $.05 (five cents) commission per .50 cent paid by inmates and friends and family to send email messages through Kimble's portal and a 10% commission on remote video visitation. Notwithstanding the foregoing, no commission shall be paid on the sale of U.S. Postal items or kits purchased by the Customer for indigent inmates of the Facility.

4. **Customers Use of Software Licenses.** Kimble's through its business relationship with Tech Friends Inc. grants Customer a non-exclusive, non-transferable license to use (without the right to sublicense) and to access certain proprietary computer software products and materials in connection provision of services hereunder ("Software"). The Software includes any upgrades, modifications, updates, and additions to existing features that are implemented in Kimble's discretion (the "Updates"). Kimble's warrants and represents that the Software is warrantied to meet GAAP (General Applied Accounting Principles) standards. Customer authorizes Kimble's to provide or preinstall the third-party software and agrees that Kimble's may agree to the third party End User License Agreements on Customers behalf. Customer's right to use any third-party software product that Kimble's provides shall be limited by the terms of the underlying license that Kimble's obtained for such product. The Software is to be used solely for Customers internal business purposes in connection with the provision of the services contemplated hereby. Customer will not permit a third party to use the Software, assign, sublicense, lease, encumber, or otherwise transfer or attempt to transfer the Software or any portion thereof, process or permit to be processed any data of any other party with the Software, alter, maintain, enhance, disassemble, decompile, reverse engineer or otherwise modify the Software or allow any third party to do so, connect the Software to any products that Kimble's did not furnish or approve, or ship, transfer, or export the Software into any country, or use the Software in any manner prohibited by the export laws of the United States. Kimble's is not liable with regard to any Software that Customer uses in a prohibited manner. To the extent permitted by applicable law, Customer shall indemnify Kimble's, and the agents, servants, and all employees of Kimble's, and shall defend, save and hold them harmless from and against any claim, suit, legal proceeding, judgment, decree, loss, cost, damage or expense (including, but not limited to, reasonable attorney's and other costs and expenses incident to the investigation or the defense of any claim, suit or legal proceeding) arising from or growing out of Customer's unauthorized or prohibited use of the Software caused by the negligent acts or omissions or misconduct of Customer, any subcontractor of Customer or anyone directly or indirectly employed by any of them or anyone for whose acts any of them may be responsible or liable, except to the extent caused by the negligent acts or omissions or misconduct of Kimble's, its officers, employees and agents.

5. **Certifications and Indemnity of Kimble's.** Kimble's agrees to comply with the requirements of ARTICLE 2 of Chapter 64 of the North Carolina General Statutes ("E-Verify") and if Kimble's provides services to the Customer utilizing a subcontractor, Kimble's shall require the subcontractor to comply with the requirements of Article 2 of Chapter 64 of said General Statutes. Kimble's agrees to verify compliance by affidavit upon request by the Customer. Notwithstanding any other provision herein, Kimble's shall indemnify Customer, and the agents, servants, employees and all elected officials of Customer, and shall defend, save and hold the Indemnities harmless from and against any claim, suit, legal proceeding, judgment, decree, loss, cost, damage or expense (including, but not limited to, reasonable attorney's and other costs and expenses incident to the investigation or the defense of any claim, suit or legal proceeding) arising from or growing out of the injury to or death of any person or the damage to or loss of any property (including, but not limited to, property of Kimble's) caused by the negligent acts or omissions or misconduct of Kimble's, any subcontractor or anyone directly or indirectly employed by any of them or anyone for whose acts any of them may be responsible or liable, except to the extent caused by the negligence of the Customer, its elected officials, officers, employees and agents.

6. **Relationship of Parties.** Kimble's is an independent contractor of Customer. Kimble's represents that it has or will secure, at its own expense, all personnel required in performing the services under this Agreement. Such personnel shall not be employees of or have any contractual relationship with the Customer. All personnel engaged in work under this Agreement shall be fully qualified and shall be authorized or permitted under state and local law to perform such services. It is further agreed that the Kimble's will obey all State and Federal statutes, rules and regulations. Neither Kimble's nor any employee of the Kimble's shall be deemed an officer, employee or agent of the Customer. Kimble's shall ensure that it maintains a properly executed IRS Form W-9 on file with the Customer.

7. **Insurance.**

(a) Kimble's shall obtain, at its sole expense, all insurance as required in the Customers contract control policy and shall not commence work until such insurance is in effect and certification thereof has been received by the Customer's Finance Director. Such insurance shall name the Customer as an Additional Insured under both General Liability and Auto Liability policies. Should said Certificate of Insurance expire prior to the termination of this Agreement, Kimble's shall supply to the Customer an updated certification prior to the expiration of the Certificate initially provided.

Failure of the County to demand such certificates or other evidence of full compliance with these insurance requirements or failure of the County to identify a deficiency from evidence provided shall not be construed as a waiver of Provider's obligation to maintain such insurance.

(b) Customer agrees to provide Kimble's with reasonable and timely written notice of any claim, demand, or cause of action made or brought against Customer arising out of or related to the utilization of the Software or provision of the Commissary Services in which Kimble's is brought in as a co-defendant in the Claim. Kimble's has the right to defend any such claim, demand, or cause of action at Kimble's sole cost and expense.

8. **Termination of Agreement.** Either party shall have the right to terminate this Agreement with or without cause upon thirty (30) days written notice. Notwithstanding the foregoing, in the event this Agreement is terminated by either party, there shall be no disruption of service between the termination of the existing services and the implementation of an alternate commissary service. Kimble's shall continue providing commissary services until a new vendor is selected to provide such services.

9. **Uncontrollable Circumstance.** Each Party reserves the right to renegotiate or terminate this Agreement upon sixty (60) days advance written notice if circumstances outside its control occur, which negatively impact its business, and are related to the operation of the Facility; material reduction in inmate population or capacity; material changes in policy or economic conditions; acts of God; actions taken for security reasons (such as lock-downs). Each Party shall not unreasonably exercise such right. Further, the Parties acknowledge that provision of the Commissary Services are subject to certain federal, state or local regulatory requirements and restrictions which are subject to change from time-to-time and nothing contained herein to the contrary shall restrict the Parties from taking any steps necessary to perform in compliance therewith.

10. **Force Majeure.** Either party may be excused from performance under this Agreement to the extent that performance is prevented by any act of God, war, civil disturbance, terrorism, strikes, supply or market, failure of a third party's performance, failure, fluctuation or non-availability of electrical power, heat, light, air conditioning or telecommunications equipment, other equipment failure or similar event beyond its reasonable control; provided, however that the affected party shall use reasonable efforts to remove such causes of non-performance.

11. **Notices.** Any notice or demand made by either party under the terms of this Agreement or under any statute shall be in writing and shall be given by personal delivery; registered or certified U.S. mail, postage prepaid; or commercial courier delivery service, to the address below the party's signature on this document, or to such other address as a party may designate by written notice in compliance with this section.

12. **Access to and Record Retention.** Kimble's agrees to maintain all records of or related to the Commissary Services and shall, upon the Customer's request, provide the Customer with, or access to, said records.

13. **Iran Divestment Act Certification.** Kimble's commissary hereby certifies that Kimble's commissary, and its subcontractors, are not on the Iran Final Divestment List ("List") created by the North Carolina State Treasurer pursuant to N.C.G.S. 143-6A-4. Kimble's commissary shall not utilize any subcontractor that is identified on the List.

14. **Miscellaneous.** This Agreement shall be governed by and construed in accordance with the laws of the State of North Carolina. Unless prohibited by law, any action resulting from this Agreement shall be brought solely in the General Court of Justice of North Carolina sitting in Lee County, North Carolina. No waiver by either party of any event of default under this Agreement shall operate as a waiver of any subsequent default under the terms of this Agreement. If any provision of this Agreement is held to be invalid or unenforceable, the validity or enforceability of the other provisions shall remain unaffected. Provider shall not sub-contract all or any part of the services provided for in this Agreement without prior written approval of the County. Additionally, Provider shall not assign all or any part of this Agreement, including rights to payments, to any other party without the prior written consent of the County. This Agreement shall be binding upon and inure to the benefit of Kimble's and Customer and their respective successors and permitted assigns, Each signatory to this Agreement warrants and represents that he or she has the unrestricted right and requisite authority to enter into and execute this Agreement, to bind his or her respective party, and to authorize the obligations of the respective parties as set forth herein. Provider and Customer each shall comply, at its own expense, with all applicable laws and regulations in the performance of their respective obligations under this Agreement and otherwise in their operations. Nothing in this Agreement shall be deemed or construed by the parties or any other entity to create an agency, partnership, or joint venture between Customer and Provider. This Agreement cannot be modified orally and can only be modified by a

written instrument signed by all parties. The parties' rights and obligations, which by their nature would extend beyond the termination, cancellation, or expiration of this Agreement, shall survive such termination, cancellation, or expiration (including, without limitation, any payment obligations for services or equipment received prior to such termination, cancellation, or expiration). This Agreement may be executed in counterparts, each of which shall be fully effective as an original, and all of which together shall constitute one and the same instrument. This Agreement constitutes the entire agreement of the parties regarding the subject matter set forth herein and supersedes any prior oral or written agreements or guarantees regarding subject matter set forth herein. This contract will be administered by the Lee County Sheriff or his designee.

CUSTOMER:	KIMBLES:
Lee County NC	Kimble's Commissary Service
By: Amy M. Dalrymple	By: Mark Strickland
Name: Amy M Dalrymple	Name: Mark Strickland
Title: Chair, Lee County Board of Commissioners	Title: Business Development Specialist
Date: 12/17/2018	Date: 12-27-2018
Lee County's Notice Address:	Kimble's Notice Address:
Lee County Sheriff's Office	Kimble's Commissary Services
Post Office Box 4567 Sanford, North Carolina 27331	100 Webster St.
	LaGrange Georgia, 30241
Phone – (919) 718-4560	Phone – 706-884-5527

The County of Lee North Carolina
IRAN DIVESTMENT ACT CERTIFICATION

Vendor/Contractor Name: Kimble's Food By Design

IRAN DIVESTMENT ACT CERTIFICATION
REQUIRED BY N.C.G.S. 147-86.59

As of the date listed below, the entity listed above is not listed on the Final Divestment List created by State Treasurer pursuant to N.C.G.S. 147-86.58.

The undersigned hereby certifies that he/she is authorized by the entity listed above to make the foregoing statement

Signature

12-17-2018
Date

Mark J. Strickland
Printed Name

Business Development Specialist
Printed Title

Melissa Ann Atkinson

12/17/2018

MELISSA ANN ATKINSON
NOTARY
EXPIRES
GEORGIA
March 26, 2021
PUBLIC
LITY

The County of Lee North Carolina
E-VERIFY ADDENDUM

CONTRACTOR/VENDOR agrees that it shall comply with the requirements of Article 2 of Chapter 64 of the General Statutes. Further, if CONTRACTOR/VENDOR utilizes a subcontractor, CONTRACTOR/VENDOR agrees that it shall require the subcontractor to comply with the requirements of Article 2 of Chapter 64 of the General Statutes.

Dated this the 17 day of December, 2018

Contractor/Vendor

Business Development Specialist
Title

Notary Public

LISA A SAMS
MY COMMISSION EXPIRES
NOTARY PUBLIC
OCTOBER 15, 2022
TROUP COUNTY, GEORGIA

THIRD AMENDMENT
TO
MASTER SERVICES AGREEMENT

This **THIRD AMENDMENT** is effective as of the last date it is signed by the parties and amends, supplements and clarifies the Master Services Agreement December 17, 2018 ("Agreement") , by and between Lee County, North Carolina ("Customer") and Kimble's Food by Design Inc. ("Kimble's").

WHEREAS, Customer desires and Kimble's agrees to continue services as related to the commissary process and related equipment and solutions.

NOW, THEREFORE, as of the Third Amendment Effective Date and in consideration of the mutual promises and covenants contained herein, the parties agree as follows:

TERM: All prior references to 'Term' in subsequent documents related to this Master Services Agreement shall be superseded by the following: The "Term" of this Agreement shall commence upon the signing of this Third Amendment and will continue for twelve (12) months thereafter. The Agreement may be renewed for additional one (1) year terms by mutual written consent of the parties. Notwithstanding anything to the contrary, the terms and conditions of the Agreement shall continue to apply after the twelve (12) month expiration until a new agreement is agreed upon or the Client gives at least ninety (90) days written notice of intent not to renew the Agreement.

Notwithstanding anything to the contrary, the terms and conditions of this Agreement shall continue to apply to each Schedule for so long as we continue to provide the Application to you after the expiration or earlier termination of this Agreement.

All terms and conditions of the Agreement not amended by this Third Amendment remain in full force and effect.

IN WITNESS WHEREOF, the parties have executed this Third Amendment as of the Third Amendment Effective Date by their duly authorized representatives.

LEE COUNTY, NORTH CAROLINA

By: _____

Name: _____

Title: _____

Date: _____

KIMBLE'S FOOD BY DESIGN INC.

By: Mark J. Strickland

Name: _____

Title: Business Development

Date: 2-14-2022

ITEM #: II.G

LEE COUNTY AGENDA ABSTRACT
BOARD OF COMMISSIONERS - REGULAR

MEETING DATE: February 21, 2022

SUBJECT: Microsoft Email Licensing via Lee County NC 543 COVID funds.

DEPARTMENT: Information Technology

CONTACT PERSON: Kyle Edwards,

TYPE: Consent Agenda

REQUEST	Authorize the County Manager to approve the purchase order allowing COVID funds to be released for the purchase of necessary Microsoft Email Licensing.
BUDGET IMPACT	No budget impact to Lee County 2021-2022. $40,000.00 from COVID funding. $10 per organizational mailbox per month for the mailbox license and security protection. The county supports 500 email boxes and this funding will take us through October renewal date.
ATTACHMENTS	LiftOff_SoleSource2022.pdf
PRIOR BOARD ACTION	N/A
RECOMMENDATION	Authorize the County Manager to approve the purchase order allowing COVID funds to be released for the purchase of necessary Microsoft Email Licensing.

SUMMARY

We have sought to obtain Microsoft Online Licensing funding for the Microsoft G1 online plan for our organization via NC State 543 COVID funding and have been approved. This G1 plan would include licensing for all the features of Exchange Online Government Plan 1 plus cloud file storage and sharing, online meetings and instant messaging with Microsoft Teams, HD videoconferencing, and intranet and team sites all under the most up to date and secure environment Microsoft has to offer. The most important part of the G1 licensing is so that we

can migrate all organizational users to the Microsoft Exchange Online email system. The Microsoft Exchange on-premise system does not allow for fully secure communication any longer and as such our system is vulnerable to security exploits. We have temporarily mitigated the risk by disabling certain features of the system but this is not a long term solution and we are currently in a hybrid configuration not recommended by Microsoft and the requested licensing will allow us to move from hybrid to fully migrated. Until all of our organizational users are migrated to the Microsoft Online system, a bridge must exist during the hybrid configuration between Microsoft and our on-premise system leaving the email database susceptible to vulnerabilities for the entire organization due to the on-premise vulnerabilities. The reason COVID funding works for this request is that the additional features of the G1 license would allow us to collaborate across the organization with Microsoft Teams using its online meeting and instant messaging capability in relation to COVID issues, events, information dissemination, etc. and would greatly increase our efficiency in the organization overall in how we continue to respond to the pandemic. There is a possibility that COVID funding will not be available to renew these licenses in the 2022-2023 fiscal year and I will be covering this likelihood in the IT budget proposal wherein the Social Services department will be able to cover over 30% of the cost with their reimbursement capability. This is a mandatory change due to the security landscape we are in and will be a top priority in my budget request. There are other costs in the IT budget proposal for the upcoming fiscal year that will be reduced as a result of bringing this licensing on board in the event COVID funding is not available for this in the new fiscal year. I have also attached a sole source letter from the Microsoft partner we are acquiring the licensing from. Microsoft pricing is the same to all partners but the vendor we are working with provides a proprietary combination of training and configuration to complement the licensing at no additional cost.

January 21, 2022

LiftOff, LLC

1667 Patrice Circle

Crofton, MD 21114

Subject: LiftOff's bundled offering of subscription software, customized training, support, and our best practice library of documentation is unique and only offered through LiftOff, LLC.

To Whom It May Concern:

This letter serves as a sole source document for the packaged bundle of software, admin training, end-user training, videos, consulting, support, and documentation that LiftOff, LLC provides to our clients.

While some components of our total package may be available from other vendors, the complete package with our embedded intellectual property and customization is only available through LiftOff, LLC. As a result of LiftOff's investment in Office 365 methodology and techniques, we have created intellectual property to include:

- Consulting guidelines and assessments created by LiftOff that are used in the deployment and management of Office 365 environments.
- Customized training videos created by LiftOff.
- Ongoing support for Azure AD environments.
- A library of documentation and best-practice guides based on the experience that LiftOff has gathered over the course of 800+ project deliveries.

Together, these offerings are bundled with software and support to create a unique package for our clients.

Sincerely,

Ronald C. Braatz, President

ITEM #: II.H

LEE COUNTY AGENDA ABSTRACT
BOARD OF COMMISSIONERS - REGULAR

MEETING DATE: February 21, 2022

SUBJECT: Added Item-Approval of Agreement with Vines Architecture

DEPARTMENT: Governing Body

CONTACT PERSON: Whitney Parrish ,

TYPE: Consent Agenda

REQUEST	Approve agreement with Vines Architecture
BUDGET IMPACT	$1,387,500.00
ATTACHMENTS	Final Vines Agreement.pdf 2021010_A1_Lee County Library AE Design Proposal_Final.pdf
PRIOR BOARD ACTION	On September 20, 2021, the BoC awarded Vines Architecture to become the designer of record for Project 4841-01-21 for the Lee County Library
RECOMMENDATION	Request approval of agreement with Vines Architecture

SUMMARY

After the Board awarded Vines Architecture, Inc. as the designer for the new Lee County Library, staff entered into negotiations and review of the agreement. The agreement is attached and staff is now asking for approval of the agreement and to authorize the Chair to sign the agreement. Staff will bring the CMAR agreement with SAMET and Sanford Contractors back to the Board once it has been finalized.

AIA® Document B133™ – 2019

Standard Form of Agreement Between Owner and Architect, Construction Manager as Constructor Edition

AGREEMENT made as of the 10th day of February in the year 2022
(In words, indicate day, month and year.)

BETWEEN the Architect's client identified as the Owner:
(Name, legal status, address, and other information)

Lee County Government
408 Summit Drive
Sanford, NC 27331-1988

and the Architect:
(Name, legal status, address, and other information)

Vines Architecture, Inc.
819 W. Hargett St., Suite 102
Raleigh, NC 27603
(919) 755-1975

for the following Project:
(Name, location, and detailed description)

Lee County Library 4841-01-21
Sanford, NC 27330

The Construction Manager (if known):
(Name, legal status, address, and other information)
SAMET Corporation and Sanford Contractors
5430 Wade Park Blvd, Suite 110
Raleigh, NC 27607
919-703-0263

The Owner and Architect agree as follows.

ADDITIONS AND DELETIONS:
The author of this document has added information needed for its completion. The author may also have revised the text of the original AIA standard form. An *Additions and Deletions Report* that notes added information as well as revisions to the standard form text is available from the author and should be reviewed. A vertical line in the left margin of this document indicates where the author has added necessary information and where the author has added to or deleted from the original AIA text.

This document has important legal consequences. Consultation with an attorney is encouraged with respect to its completion or modification.

This document is intended to be used in conjunction with AIA Documents A201–2017™, General Conditions of the Contract for Construction; A133–2019™ Standard Form of Agreement Between Owner and Construction Manager as Constructor where the basis of payment is the Cost of the Work Plus a Fee with a Guaranteed Maximum Price; and A134–2019™ Standard Form of Agreement Between Owner and Construction Manager as Constructor where the basis of payment is the Cost of the Work Plus a Fee without a Guaranteed Maximum Price. AIA Document A201™–2017 is adopted in this document by reference. Do not use with other general conditions unless this document is modified.

Init.
/

AIA Document B133™ – 2019. Copyright © 2014, and 2019 by The American Institute of Architects. All rights reserved. The "American Institute of Architects," "AIA," the AIA Logo, and "AIA Contract Documents" are registered trademarks and may not be used without permission. This document was produced by AIA software at 09:18:54 ET on 02/11/2022 under Order No.2998476739 which expires on 09/25/2022, is not for resale, is licensed for one-time use only, and may only be used in accordance with the AIA Contract Documents® Terms of Service. To report copyright violations, e-mail copyright@aia.org.
User Notes: (1664241209)

TABLE OF ARTICLES

1 INITIAL INFORMATION

2 ARCHITECT'S RESPONSIBILITIES

3 SCOPE OF ARCHITECT'S BASIC SERVICES

4 SUPPLEMENTAL AND ADDITIONAL SERVICES

5 OWNER'S RESPONSIBILITIES

6 COST OF THE WORK

7 COPYRIGHTS AND LICENSES

8 CLAIMS AND DISPUTES

9 TERMINATION OR SUSPENSION

10 MISCELLANEOUS PROVISIONS

11 COMPENSATION

12 SPECIAL TERMS AND CONDITIONS

13 SCOPE OF THE AGREEMENT

ARTICLE 1 INITIAL INFORMATION

§ 1.1 This Agreement is based on the Initial Information set forth in this Section 1.1.
(For each item in this section, insert the information or a statement such as "not applicable" or "unknown at time of execution.")

§ 1.1.1 The Owner's program for the Project:
(Insert the Owner's program, identify documentation that establishes the Owner's program, or state the manner in which the program will be developed.)

§ 1.1.2 The Project's physical characteristics:
Lee County Design Architect of Record for this project to provide professional programming/planning, design, and construction administration services for the County Library. The new library is expected to be designed as a 30,000 SF new building. The final building size will be concluded at the completion of the Programming. The Scope of Services (Basic and Supplemental Services) is outlined in Section 3. The new Library will be delivered through a Construction Management-at-Risk (CMAR) delivery method using SAMET/Sanford Contractors.

§ 1.1.3 The Owner's budget for the Cost of the Work, as defined in Section 6.1:
Total Budget is $16,000,000

§ 1.1.4 The Owner's anticipated design and construction milestone dates:

.1 Design phase milestone dates, if any:

a. Programming and Planning. 21 February – 11 April 2022
b. Programming and Planning Report Submittal Complete. 11 April 2022

Init. / **AIA Document B133™ – 2019.** Copyright © 2014, and 2019 by The American Institute of Architects. All rights reserved. The "American Institute of Architects," "AIA," the AIA Logo, and "AIA Contract Documents" are registered trademarks and may not be used without permission. This document was produced by AIA software at 09:18:54 ET on 02/11/2022 under Order No.2998476739 which expires on 09/25/2022, is not for resale, is licensed for one-time use only, and may only be used in accordance with the AIA Contract Documents® Terms of Service. To report copyright violations, e-mail copyright@aia.org.
User Notes: (1664241209)

c.	Schematic Design Phase Complete.	15 July 2022
d.	Design Development Phase Complete.	18 November 2022
e.	Construction Documents Phase Complete.	7 July 2023
f.	Estimated Approved and Release for Bid.	10 July 2023
g.	GMP Recommendation to Award.	15 September 2023
h.	Notice to Proceed (construction).	29 September 2023
i.	Estimated Construction Period.	2 October 2023 – 31 October 2024
j.	Lee County Acceptance of Building.	1 November 2024
k.	FFE Installation.	1 November – 13 December 2024
l.	Owner Move-n Period.	1-31 December 2024

.2 Construction commencement date:

a. Estimated Construction Period. 2 October 2023 – 31 October 2024

.3 Substantial Completion date or dates:

a. Lee County Acceptance of Building. 1 November 2024

.4 Other milestone dates:

a. See 1.1.4.1

§ 1.1.5 The Owner intends to retain a Construction Manager pursuant to the following agreement:
(Indicate agreement type.)

[X] Lee County's Standard Form Agreement between Owner and Construction Manager in accordance with Lee County resolution for CMAR from 15 NOV 2021

[ ] AIA Document A133–2019, Standard Form of Agreement Between Owner and Construction Manager as Constructor where the basis of payment is the Cost of the Work Plus a Fee with a Guaranteed Maximum Price.

[ ] AIA Document A134–2019, Standard Form of Agreement Between Owner and Construction Manager as Constructor where the basis of payment is the Cost of the Work Plus a Fee without a Guaranteed Maximum Price.

§ 1.1.6 The Owner's requirements for accelerated or fast-track design and construction, or phased construction are set forth below:
(List number and type of bid/procurement packages.)

§ 1.1.7 The Owner's anticipated Sustainable Objective for the Project:
(Identify and describe the Owner's Sustainable Objective for the Project, if any.)

§ 1.1.7.1 If the Owner identifies a Sustainable Objective, the Owner and Architect shall complete and incorporate AIA Document E234™–2019, Sustainable Projects Exhibit, Construction Manager as Constructor Edition, into this Agreement to define the terms, conditions and services related to the Owner's Sustainable Objective. If E234-2019 is incorporated into this Agreement, the Owner and Architect shall incorporate the completed E234–2019 into the agreements with the consultants and contractors performing services or Work in any way associated with the Sustainable Objective.

§ 1.1.8 The Owner identifies the following representative in accordance with Section 5.4:
(List name, address, and other contact information.)

AIA Document B133™ – 2019. Copyright © 2014, and 2019 by The American Institute of Architects. All rights reserved. The "American Institute of Architects," "AIA," the AIA Logo, and "AIA Contract Documents" are registered trademarks and may not be used without permission. This document was produced by AIA software at 09:18:54 ET on 02/11/2022 under Order No.2998476739 which expires on 09/25/2022, is not for resale, is licensed for one-time use only, and may only be used in accordance with the AIA Contract Documents® Terms of Service. To report copyright violations, e-mail copyright@aia.org.
User Notes: (1664241209)

Dr. John C. Crumpton.
Lee County Manager
408 Summit Dr. Sanford. NC 27330
919-718-4605 – Ext. 5508
jcrumpton@leecountync.gov

§ 1.1.9 The persons or entities, in addition to the Owner's representative, who are required to review the Architect's submittals to the Owner are as follows:
(List name, address, and other contact information.)

Santiago Giraldo
Lee County Development Services Director
408 Summit Dr. Sanford. NC, 27330

Richard Oldham
Sanford Contractors
PO Box 9. Lemon Springs, NC 28355

§ 1.1.10 The Owner shall retain the following consultants and contractors:
(List name, legal status, address, and other contact information.)

.1 Construction Manager:

SAMET Corporation and Sanford Contractors.
Richard Oldham
Sanford Contractors
5430 Wade Park Blvd, Suite 110
Raleigh, NC 27607
919-703-0263

(The Construction Manager is identified on the cover page. If a Construction Manager has not been retained as of the date of this Agreement, state the anticipated date of retention. If the Architect is to assist the Owner in selecting the Construction Manager, complete Section 4.1.1.1)

.2 Land Surveyor:

.3 Geotechnical Engineer:

.4 Civil Engineer:

.5 Other consultants and contractors:
(List any other consultants and contractors retained by the Owner.)

§ 1.1.11 The Architect identifies the following representative in accordance with Section 2.4:
(List name, address, and other contact information.)

Victor Vines – Principal-in-Charge
Robert Thomas – Design Principal
Jeff Schroeder – Project Architect
Dave Hardin – Project Architect

§ 1.1.12 The Architect shall retain the consultants identified in Sections 1.1.12.1 and 1.1.12.2:

AIA Document B133™ – 2019. Copyright © 2014, and 2019 by The American Institute of Architects. All rights reserved. The "American Institute of Architects," "AIA," the AIA Logo, and "AIA Contract Documents" are registered trademarks and may not be used without permission. This document was produced by AIA software at 09:18:54 ET on 02/11/2022 under Order No.2998476739 which expires on 09/25/2022, is not for resale, is licensed for one-time use only, and may only be used in accordance with the AIA Contract Documents® Terms of Service. To report copyright violations, e-mail copyright@aia.org.
User Notes: (1664241209)

(List name, legal status, address, and other contact information.)

§ 1.1.12.1 Consultants retained under Basic Services:

.1 Structural Engineer:

Lynch Mykins

.2 Mechanical Engineer:

Dewberry

.3 Electrical Engineer:

Dewberry

.4 Civil Engineer:

Dewberry

.5 Landscape Architect:

Surface 678

.6 Lightening Consultant:

Glimmer and Glow

.7 Cost Estimating

Palacio Collaborative

§ 1.1.12.2 Consultants retained under Supplemental Services:

1. Audio Visual & Information Technology:

NV5

§ 1.1.13 Other Initial Information on which the Agreement is based:

§ 1.2 The Owner and Architect may rely on the Initial Information. Both parties, however, recognize that the Initial Information may materially change and, in that event, the Owner and the Architect shall appropriately adjust the Architect's services, schedule for the Architect's services, and the Architect's compensation. The Owner shall adjust the Owner's budget for the Cost of the Work and the Owner's anticipated design and construction milestones, as necessary, to accommodate material changes in the Initial Information.

§ 1.3 The parties shall agree upon protocols governing the transmission and use of Instruments of Service or any other information or documentation in digital form. The parties will use AIA Document E203™–2013, Building Information Modeling and Digital Data Exhibit, to establish the protocols for the development, use, transmission, and exchange of digital data.

§ 1.3.1 Any use of, or reliance on, all or a portion of a building information model without agreement to protocols governing the use of, and reliance on, the information contained in the model and without having those protocols set forth

AIA Document B133™ – 2019. Copyright © 2014, and 2019 by The American Institute of Architects. All rights reserved. The "American Institute of Architects," "AIA," the AIA Logo, and "AIA Contract Documents" are registered trademarks and may not be used without permission. This document was produced by AIA software at 09:18:54 ET on 02/11/2022 under Order No.2998476739 which expires on 09/25/2022, is not for resale, is licensed for one-time use only, and may only be used in accordance with the AIA Contract Documents® Terms of Service. To report copyright violations, e-mail copyright@aia.org.
User Notes: (1664241209)

in AIA Document E203™–2013, Building Information Modeling and Digital Data Exhibit, and the requisite AIA Document G202™–2013, Project Building Information Modeling Protocol Form, shall be at the using or relying party's sole risk and without liability to the other party and its contractors or consultants, the authors of, or contributors to, the building information model, and each of their agents and employees.

ARTICLE 2 ARCHITECT'S RESPONSIBILITIES

§ 2.1 The Architect shall provide professional services as set forth in this Agreement. The Architect represents that it is properly licensed in the jurisdiction where the Project is located to provide the services required by this Agreement, or shall cause such services to be performed by appropriately licensed design professionals.

§ 2.2 The Architect shall perform its services consistent with the professional skill and care ordinarily provided by architects practicing in the same or similar locality under the same or similar circumstances. The Architect shall perform its services as expeditiously as is consistent with such professional skill and care and the orderly progress of the Project.

§ 2.3 The Architect shall provide its services in conjunction with the services of a Construction Manager as described in the agreement identified in Section 1.1.5. The Architect shall not be responsible for actions taken by the Construction Manager.

§ 2.4 The Architect shall identify a representative authorized to act on behalf of the Architect with respect to the Project.

§ 2.5 Except with the Owner's knowledge and consent, the Architect shall not engage in any activity, or accept any employment, interest or contribution that would reasonably appear to compromise the Architect's professional judgment with respect to this Project.

§ 2.6 Insurance. The Architect shall maintain the following insurance until termination of this Agreement. If any of the requirements set forth below are in addition to the types and limits the Architect normally maintains, the Owner shall pay the Architect as set forth in Section 11.9.

§ 2.6.1 Commercial General Liability with policy limits of not less than Two Million ($ 2,000,000) for each occurrence and One Million ($ 1,000,000) in the aggregate for bodily injury and property damage.

§ 2.6.2 Automobile Liability covering vehicles owned, and non-owned vehicles used, by the Architect with policy limits of not less than Two Million ($2,000,000) per accident for bodily injury, death of any person, and property damage arising out of the ownership, maintenance and use of those motor vehicles, along with any other statutorily required automobile coverage.

§ 2.6.3 The Architect may achieve the required limits and coverage for Commercial General Liability and Automobile Liability through a combination of primary and excess or umbrella liability insurance, provided such primary and excess or umbrella liability insurance policies result in the same or greater coverage as the coverages required under Sections 2.6.1 and 2.6.2, and in no event shall any excess or umbrella liability insurance provide narrower coverage than the primary policy. The excess policy shall not require the exhaustion of the underlying limits only through the actual payment by the underlying insurers.

§ 2.6.4 Workers' Compensation at statutory limits.

§ 2.6.5 Employers' Liability with policy limits not less than One Million ($ 1,000,000) each accident, One Million ($ 1,000,000) each employee, and One Million $ (1,000,000) policy limit.

§ 2.6.6 Professional Liability covering negligent acts, errors and omissions in the performance of professional services, with policy limits of not less than Two Million ($2,000,000) per claim and Two Million ($2,000,000) in the aggregate.

§ 2.6.7 Additional Insured Obligations. To the fullest extent permitted by law, the Architect shall cause the primary and excess or umbrella polices for Commercial General Liability and Automobile Liability to include the Owner as an additional insured for claims caused in whole or in part by the Architect's negligent acts or omissions. The additional insured coverage shall be primary and non-contributory to any of the Owner's insurance policies and shall apply to both ongoing and completed operations.

AIA Document B133™ – 2019. Copyright © 2014, and 2019 by The American Institute of Architects. All rights reserved. The "American Institute of Architects," "AIA," the AIA Logo, and "AIA Contract Documents" are registered trademarks and may not be used without permission. This document was produced by AIA software at 09:18:54 ET on 02/11/2022 under Order No.2998476739 which expires on 09/25/2022, is not for resale, is licensed for one-time use only, and may only be used in accordance with the AIA Contract Documents® Terms of Service. To report copyright violations, e-mail copyright@aia.org.
User Notes: (1664241209)

§ **2.6.8** The Architect shall provide certificates of insurance to the Owner that evidence compliance with the requirements in this Section 2.6.

ARTICLE 3 SCOPE OF ARCHITECT'S BASIC SERVICES

§ **3.1** The Architect's Basic Services consist of those described in this Article 3 and include usual and customary structural, mechanical, and electrical engineering services. Services not set forth in this Article 3 are Supplemental or Additional Services.

Basic Services	**Responsibility** *(Architect, Owner, or not provided)*
§ **3.1.1** Architectural Design	Architect
§ **3.1.2** Structural Design	Architect
§ **3.1.3** Mechanical/HVAC Building Design	Architect
§ **3.1.4** On Site Mechanical Site Utility Design	Architect
§ **3.1.5** Electrical Building Design	Architect
§ **3.1.6** Electrical Site Utility Design	Architect
§ **3.1.7** Fire Alarm Design	Architect
§ **3.1.8** Plumbing Design	Architect
§ **3.1.9** Civil Design	Architect
§ **3.1.10** Building Proximity Landscape & Site Lighting Design	Architect
§ **3.1.11** Cost Estimating and Scheduling	Architect
§ **3.1.12** Sustainability, Energy Efficiency Buildings	Architect

§ **3.1.1** The Architect shall manage the Architect's services, research applicable design criteria, attend Project meetings, communicate with members of the Project team, and report progress to the Owner.

§ **3.1.2** The Architect shall coordinate its services with those services provided by the Owner, the Construction Manager, and the Owner's consultants. The Architect shall be entitled to rely on, and shall not be responsible for, the accuracy, completeness, and timeliness of, services and information furnished by the Owner, the Construction Manager, and the Owner's consultants. The Architect shall provide prompt written notice to the Owner if the Architect becomes aware of any error, omission, or inconsistency in such services or information.

§ **3.1.3** As soon as practicable after the date of this Agreement, the Architect shall submit, for the Construction Manager's review and the Owner's approval, a schedule for the performance of the Architect's services. The schedule shall include design phase milestone dates, as well as the anticipated dates for the commencement of construction and for Substantial Completion of the Work as set forth in the Initial Information. The schedule shall include allowances for periods of time required for the Owner's review, for the Construction Manager's review, for the performance of the Construction Manager's Preconstruction Phase services, for the performance of the Owner's consultants, and for approval of submissions by authorities having jurisdiction over the Project. Once approved by the Owner, time limits established by the schedule shall not, except for reasonable cause, be exceeded by the Architect or Owner. With the Owner's approval, the Architect shall adjust the schedule, if necessary, as the Project proceeds until the commencement of construction.

§ **3.1.4** The Architect shall submit information to the Construction Manager and participate in developing and revising the Project schedule as it relates to the Architect's services. The Architect shall review and approve, or take other appropriate action upon, the portion of the Project schedule relating to the performance of the Architect's services.

§ **3.1.5** The Architect shall not be responsible for an Owner's directive or substitution, or for the Owner's acceptance of non-conforming work, made or given without the Architect's written approval.

§ **3.1.6** The Architect shall, in coordination with the Construction Manager, contact governmental authorities required to approve the Construction Documents and entities providing utility services to the Project. The Architect shall respond to applicable design requirements imposed by those authorities and entities.

AIA Document B133™ – 2019. Copyright © 2014, and 2019 by The American Institute of Architects. All rights reserved. The "American Institute of Architects," "AIA," the AIA Logo, and "AIA Contract Documents" are registered trademarks and may not be used without permission. This document was produced by AIA software at 09:18:54 ET on 02/11/2022 under Order No.2998476739 which expires on 09/25/2022, is not for resale, is licensed for one-time use only, and may only be used in accordance with the AIA Contract Documents® Terms of Service. To report copyright violations, e-mail copyright@aia.org.
User Notes: (1664241209)

§ 3.1.7 The Architect shall assist the Owner and Construction Manager in connection with the Owner's responsibility for filing documents required for the approval of governmental authorities having jurisdiction over the Project.

§ 3.1.8 Prior to the Owner's acceptance of the Construction Manager's Guaranteed Maximum Price proposal, or the Owner's approval of the Construction Manager's Control Estimate, as applicable, the Architect shall consider the Construction Manager's requests for substitutions and, upon written request of the Construction Manager, provide clarification or interpretations pertaining to the Drawings, Specifications, and other documents submitted by the Architect. The Architect and Construction Manager shall include the Owner in communications related to substitution requests, clarifications, and interpretations.

§ 3.2 Review of the Construction Manager's Guaranteed Maximum Price Proposal or Control Estimate

§ 3.2.1 At a time to be mutually agreed upon by the Owner and the Construction Manager, the Construction Manager shall prepare, for review by the Owner and Architect, and for the Owner's acceptance or approval, a Guaranteed Maximum Price proposal or Control Estimate. The Architect shall assist the Owner in reviewing the Construction Manager's proposal or estimate. The Architect's review is not for the purpose of discovering errors, omissions, or inconsistencies; for the assumption of any responsibility for the Construction Manager's proposed means, methods, sequences, techniques, or procedures; or for the verification of any estimates of cost or estimated cost proposals. In the event that the Architect discovers any inconsistencies or inaccuracies in the information presented, the Architect shall promptly notify the Owner and Construction Manager.

§ 3.2.2 Upon authorization by the Owner, and subject to Section 4.2.1.14, the Architect shall update the Drawings, Specifications, and other documents to incorporate the agreed upon assumptions and clarifications contained in the Guaranteed Maximum Price Amendment or Control Estimate.

§ 3.3 Schematic Design Phase Services

§ 3.3.1 The Architect shall review the program, and other information furnished by the Owner and Construction Manager, and shall review laws, codes, and regulations applicable to the Architect's services.

§ 3.3.2 The Architect shall prepare a preliminary evaluation of the Owner's program, schedule, budget for the Cost of the Work, Project site, and other Initial Information, each in terms of the other, to ascertain the requirements of the Project. The Architect shall notify the Owner of (1) any inconsistencies discovered in the information, and (2) other information or consulting services that may be reasonably needed for the Project.

§ 3.3.3 The Architect shall present its preliminary evaluation to the Owner and Construction Manager and shall discuss with the Owner and Construction Manager alternative approaches to design and construction of the Project. The Architect shall reach an understanding with the Owner regarding the requirements of the Project.

§ 3.3.4 Based on the Project requirements agreed upon with the Owner, the Architect shall prepare and present, to the Owner and Construction Manager, for the Owner's approval, a preliminary design illustrating the scale and relationship of the Project components.

§ 3.3.5 Based on the Owner's approval of the preliminary design, the Architect shall prepare Schematic Design Documents for Construction Manager's review and the Owner's approval. The Schematic Design Documents shall consist of drawings and other documents including a site plan, if appropriate, and preliminary building plans, sections and elevations; and may include some combination of study models, perspective sketches, or digital representations. Preliminary selections of major building systems and construction materials shall be noted on the drawings or described in writing.

§ 3.3.5.1 The Architect shall consider sustainable design alternatives, such as material choices and building orientation, together with other considerations based on program and aesthetics, in developing a design that is consistent with the Owner's program, schedule and budget for the Cost of the Work. The Owner may obtain more advanced sustainable design services as a Supplemental Service under Section 4.1.

§ 3.3.5.2 The Architect shall consider with the Owner and the Construction Manager the value of alternative materials, building systems and equipment, together with other considerations based on program and aesthetics, in developing a design for the Project that is consistent with the Owner's program, schedule, and budget for the Cost of the Work.

AIA Document B133™ – 2019. Copyright © 2014, and 2019 by The American Institute of Architects. All rights reserved. The "American Institute of Architects," "AIA," the AIA Logo, and "AIA Contract Documents" are registered trademarks and may not be used without permission. This document was produced by AIA software at 09:18:54 ET on 02/11/2022 under Order No.2998476739 which expires on 09/25/2022, is not for resale, is licensed for one-time use only, and may only be used in accordance with the AIA Contract Documents® Terms of Service. To report copyright violations, e-mail copyright@aia.org.
User Notes: (1664241209)

§ 3.3.6 The Architect shall submit the Schematic Design Documents to the Owner and the Construction Manager. The Architect shall meet with the Construction Manager to review the Schematic Design Documents.

§ 3.3.7 Upon receipt of the Construction Manager's review comments and cost estimate at the conclusion of the Schematic Design Phase, the Architect shall take action as required under Section 6.4, and request the Owner's approval of the Schematic Design Documents. If revisions to the Schematic Design Documents are required to comply with the Owner's budget for the Cost of the Work at the conclusion of the Schematic Design Phase, the Architect shall incorporate the required revisions in the Design Development Phase for add'l services..

§ 3.3.8 In the further development of the Drawings and Specifications during this and subsequent phases of design, the Architect shall be entitled to rely on the accuracy of the estimates of the Cost of the Work, which are to be provided by the Construction Manager under the Construction Manager's agreement with the Owner.

§ 3.4 Design Development Phase Services

§ 3.4.1 Based on the Owner's approval of the Schematic Design Documents, and on the Owner's authorization of any adjustments in the Project requirements and the budget for the Cost of the Work, the Architect shall prepare Design Development Documents for the Construction Manager's review and the Owner's approval. The Design Development Documents shall be based upon information provided, and estimates prepared by, the Construction Manager and shall illustrate and describe the development of the approved Schematic Design Documents and shall consist of drawings and other documents including plans, sections, elevations, typical construction details, and diagrammatic layouts of building systems to fix and describe the size and character of the Project as to architectural, structural, mechanical and electrical systems, and other appropriate elements. The Design Development Documents shall also include outline specifications that identify major materials and systems and establish in general their quality levels.

§ 3.4.2 Prior to the conclusion of the Design Development Phase, the Architect shall submit the Design Development Documents to the Owner and the Construction Manager. The Architect shall meet with the Construction Manager to review the Design Development Documents.

§ 3.4.3 Upon receipt of the Construction Manager's information and estimate at the conclusion of the Design Development Phase, the Architect shall take action as required under Sections 6.5 and 6.6 and request the Owner's approval of the Design Development Documents.

§ 3.5 Construction Documents Phase Services

§ 3.5.1 Based on the Owner's approval of the Design Development Documents, and on the Owner's authorization of any adjustments in the Project requirements and the budget for the Cost of the Work, the Architect shall prepare Construction Documents for the Construction Manager's review and the Owner's approval. The Construction Documents shall illustrate and describe the further development of the approved Design Development Documents and shall consist of Drawings and Specifications setting forth in detail the quality levels and performance criteria of materials and systems and other requirements for the construction of the Work. The Owner and Architect acknowledge that, in order to perform the Work, the Construction Manager will provide additional information, including Shop Drawings, Product Data, Samples and other similar submittals, which the Architect shall review in accordance with Section 3.6.4.

§ 3.5.2 The Architect shall incorporate the design requirements of governmental authorities having jurisdiction over the Project into the Construction Documents.

§ 3.5.3 During the development of the Construction Documents, if requested by the Owner, the Architect shall assist the Owner and Construction Manager in the development and preparation of (1) the Conditions of the Contract for Construction (General, Supplementary and other Conditions) and (2) a project manual that includes the Conditions of the Contract for Construction and Specifications, and may include sample forms.

§ 3.5.4 Prior to the conclusion of the Construction Documents Phase, the Architect shall submit the Construction Documents to the Owner and the Construction Manager. The Architect shall meet with the Construction Manager to review the Construction Documents.

AIA Document B133™ – 2019. Copyright © 2014, and 2019 by The American Institute of Architects. All rights reserved. The "American Institute of Architects," "AIA," the AIA Logo, and "AIA Contract Documents" are registered trademarks and may not be used without permission. This document was produced by AIA software at 09:18:54 ET on 02/11/2022 under Order No.2998476739 which expires on 09/25/2022, is not for resale, is licensed for one-time use only, and may only be used in accordance with the AIA Contract Documents® Terms of Service. To report copyright violations, e-mail copyright@aia.org.
User Notes: (1664241209)

§ 3.5.5 Upon receipt of the Construction Manager's information and estimate at the conclusion of the Construction Documents Phase, the Architect shall take action as required under Section 6.7, and request the Owner's approval of the Construction Documents.

§ 3.6 Construction Phase Services

§ 3.6.1 General

§ 3.6.1.1 The Architect shall provide administration of the Contract between the Owner and the Construction Manager as set forth below and in AIA Document A201™–2017, General Conditions of the Contract for Construction. If the Owner and Construction Manager modify AIA Document A201–2017, those modifications shall not affect the Architect's services under this Agreement unless the Owner and the Architect amend this Agreement. The term "Contractor" as used in A201-2017 shall mean the Construction Manager.

§ 3.6.1.2 Subject to Section 4.2, the Architect's responsibility to provide Construction Phase Services commences upon the Owner's acceptance of the Construction Manager's Guaranteed Maximum Price proposal, the Owner's approval of the Construction Manager's Control Estimate, or by a written agreement between the Owner and Construction Manager which sets forth a description of the Work to be performed by the Construction Manager prior to such acceptance or approval. Subject to Section 4.2, and except as provided in Section 3.6.6.5, the Architect's responsibility to provide Construction Phase Services terminates on the date the Architect issues the final Certificate for Payment.

§ 3.6.1.3 The Architect shall advise and consult with the Owner and Construction Manager during the Construction Phase Services. The Architect shall have authority to act on behalf of the Owner only to the extent provided in this Agreement. The Architect shall not have control over, charge of, or responsibility for the construction means, methods, techniques, sequences or procedures, or for safety precautions and programs in connection with the Work, nor shall the Architect be responsible for the Construction Manager's failure to perform the Work in accordance with the requirements of the Contract Documents. The Architect shall be responsible for the Architect's negligent acts or omissions, but shall not have control over or charge of, and shall not be responsible for, acts or omissions of the Construction Manager or of any other persons or entities performing portions of the Work.

§ 3.6.2 Evaluations of the Work

§ 3.6.2.1 The Architect shall visit the site at intervals appropriate to the stage of construction, or as otherwise required in Section 4.2.3, to become generally familiar with the progress and quality of the portion of the Work completed, and to determine, in general, if the Work observed is being performed in a manner indicating that the Work, when fully completed, will be in accordance with the Contract Documents. However, the Architect shall not be required to make exhaustive or continuous on-site inspections to check the quality or quantity of the Work. On the basis of the site visits, the Architect shall keep the Owner reasonably informed about the progress and quality of the portion of the Work completed, and promptly report to the Owner (1) known deviations from the Contract Documents, (2) known deviations from the most recent construction schedule submitted by the Construction Manager, and (3) defects and deficiencies observed in the Work.

§ 3.6.2.2 The Architect has the authority to reject Work that does not conform to the Contract Documents. Whenever the Architect considers it necessary or advisable, the Architect shall have the authority to require inspection or testing of the Work in accordance with the provisions of the Contract Documents, whether or not the Work is fabricated, installed or completed. However, neither this authority of the Architect nor a decision made in good faith either to exercise or not to exercise such authority shall give rise to a duty or responsibility of the Architect to the Construction Manager, Subcontractors, suppliers, their agents or employees, or other persons or entities performing portions of the Work.

§ 3.6.2.3 The Architect shall interpret and decide matters concerning performance under, and requirements of, the Contract Documents on written request of either the Owner or Construction Manager. The Architect's response to such requests shall be made in writing within any time limits agreed upon or otherwise with reasonable promptness.

§ 3.6.2.4 Interpretations and decisions of the Architect shall be consistent with the intent of, and reasonably inferable from, the Contract Documents and shall be in writing or in the form of drawings. When making such interpretations and decisions, the Architect shall endeavor to secure faithful performance by both Owner and Construction Manager, shall not show partiality to either, and shall not be liable for results of interpretations or decisions rendered in good faith. The Architect's decisions on matters relating to aesthetic effect shall be final if consistent with the intent expressed in the Contract Documents.

AIA Document B133™ – 2019. Copyright © 2014, and 2019 by The American Institute of Architects. All rights reserved. The "American Institute of Architects," "AIA," the AIA Logo, and "AIA Contract Documents" are registered trademarks and may not be used without permission. This document was produced by AIA software at 09:18:54 ET on 02/11/2022 under Order No.2998476739 which expires on 09/25/2022, is not for resale, is licensed for one-time use only, and may only be used in accordance with the AIA Contract Documents® Terms of Service. To report copyright violations, e-mail copyright@aia.org.
User Notes: (1664241209)

§ 3.6.2.5 Unless the Owner and Construction Manager designate another person to serve as an Initial Decision Maker, as that term is defined in AIA Document A201–2017, the Architect shall render initial decisions on Claims between the Owner and Construction Manager as provided in the Contract Documents.

§ 3.6.3 Certificates for Payment to Construction Manager

§ 3.6.3.1 The Architect shall review and certify the amounts due the Construction Manager and shall issue certificates in such amounts. The Architect's certification for payment shall constitute a representation to the Owner, based on the Architect's evaluation of the Work as provided in Section 3.6.2 and on the data comprising the Construction Manager's Application for Payment, that, to the best of the Architect's knowledge, information and belief, the Work has progressed to the point indicated, the quality of the Work is in accordance with the Contract Documents, and that the Construction Manager is entitled to payment in the amount certified. The foregoing representations are subject to (1) an evaluation of the Work for conformance with the Contract Documents upon Substantial Completion, (2) results of subsequent tests and inspections, (3) correction of minor deviations from the Contract Documents prior to completion, and (4) specific qualifications expressed by the Architect.

§ 3.6.3.2 The issuance of a Certificate for Payment shall not be a representation that the Architect has (1) made exhaustive or continuous on-site inspections to check the quality or quantity of the Work, (2) reviewed construction means, methods, techniques, sequences or procedures, (3) reviewed copies of requisitions received from Subcontractors and suppliers and other data requested by the Owner to substantiate the Construction Manager's right to payment, or (4) ascertained how or for what purpose the Construction Manager has used money previously paid on account of the Contract Sum.

§ 3.6.3.3 The Architect shall maintain a record of the Applications and Certificates for Payment.

§ 3.6.4 Submittals

§ 3.6.4.1 The Architect shall review the Construction Manager's submittal schedule and shall not unreasonably delay or withhold approval of the schedule. The Architect's action in reviewing submittals shall be taken in accordance with the approved submittal schedule or, in the absence of an approved submittal schedule, with reasonable promptness while allowing sufficient time, in the Architect's professional judgment, to permit adequate review.

§ 3.6.4.2 The Architect shall review and approve, or take other appropriate action upon, the Construction Manager's submittals such as Shop Drawings, Product Data and Samples, but only for the limited purpose of checking for conformance with information given and the design concept expressed in the Contract Documents. Review of such submittals is not for the purpose of determining the accuracy and completeness of other information such as dimensions, quantities, and installation or performance of equipment or systems, which are the Construction Manager's responsibility. The Architect's review shall not constitute approval of safety precautions or construction means, methods, techniques, sequences or procedures. The Architect's approval of a specific item shall not indicate approval of an assembly of which the item is a component.

§ 3.6.4.3 If the Contract Documents specifically require the Construction Manager to provide professional design services or certifications by a design professional related to systems, materials, or equipment, the Architect shall specify the appropriate performance and design criteria that such services must satisfy. The Architect shall review and take appropriate action on Shop Drawings and other submittals related to the Work designed or certified by the Construction Manager's design professional, provided the submittals bear such professional's seal and signature when submitted to the Architect. The Architect's review shall be for the limited purpose of checking for conformance with information given and the design concept expressed in the Contract Documents. The Architect shall be entitled to rely upon, and shall not be responsible for, the adequacy and accuracy of the services, certifications, and approvals performed or provided by such design professionals.

§ 3.6.4.4 Subject to Section 4.2, the Architect shall review and respond to requests for information about the Contract Documents. The Architect shall set forth, in the Contract Documents, the requirements for requests for information. Requests for information shall include, at a minimum, a detailed written statement that indicates the specific Drawings or Specifications in need of clarification and the nature of the clarification requested. The Architect's response to such requests shall be made in writing within any time limits agreed upon, or otherwise with reasonable promptness. If appropriate, the Architect shall prepare and issue supplemental Drawings and Specifications in response to the requests for information.

AIA Document B133™ – 2019. Copyright © 2014, and 2019 by The American Institute of Architects. All rights reserved. The "American Institute of Architects," "AIA," the AIA Logo, and "AIA Contract Documents" are registered trademarks and may not be used without permission. This document was produced by AIA software at 09:18:54 ET on 02/11/2022 under Order No.2998476739 which expires on 09/25/2022, is not for resale, is licensed for one-time use only, and may only be used in accordance with the AIA Contract Documents® Terms of Service. To report copyright violations, e-mail copyright@aia.org.
User Notes: (1664241209)

§ 3.6.4.5 The Architect shall maintain a record of submittals and copies of submittals supplied by the Construction Manager in accordance with the requirements of the Contract Documents.

§ 3.6.5 Changes in the Work

§ 3.6.5.1 The Architect may order minor changes in the Work that are consistent with the intent of the Contract Documents and do not involve an adjustment in the Contract Sum or an extension of the Contract Time. Subject to Section 4.2, the Architect shall prepare Change Orders and Construction Change Directives for the Owner's approval and execution in accordance with the Contract Documents.

§ 3.6.5.2 The Architect shall maintain records relative to changes in the Work.

§ 3.6.6 Project Completion

§ 3.6.6.1 The Architect shall:

- **.1** conduct inspections to determine the date or dates of Substantial Completion and the date of final completion;
- **.2** issue Certificates of Substantial Completion;
- **.3** forward to the Owner, for the Owner's review and records, written warranties and related documents required by the Contract Documents and received from the Construction Manager; and
- **.4** issue a final Certificate for Payment based upon a final inspection indicating that, to the best of the Architect's knowledge, information, and belief, the Work complies with the requirements of the Contract Documents.

§ 3.6.6.2 The Architect's inspections shall be conducted with the Owner to (1) check conformance of the Work with the requirements of the Contract Documents and (2) verify the accuracy and completeness of the list submitted by the Construction Manager of Work to be completed or corrected.

§ 3.6.6.3 When Substantial Completion has been achieved, the Architect shall inform the Owner about the balance of the Contract Sum remaining to be paid the Construction Manager, including the amount to be retained from the Contract Sum, if any, for final completion or correction of the Work.

§ 3.6.6.4 The Architect shall forward to the Owner the following information received from the Construction Manager: (1) consent of surety or sureties, if any, to reduction in or partial release of retainage or the making of final payment; (2) affidavits, receipts, releases and waivers of liens, or bonds indemnifying the Owner against liens; and (3) any other documentation required of the Construction Manager under the Contract Documents.

§ 3.6.6.5 Upon request of the Owner, and prior to the expiration of one year from the date of Substantial Completion, the Architect shall, without additional compensation, conduct a meeting with the Owner to review the facility operations and performance.

ARTICLE 4 SUPPLEMENTAL AND ADDITIONAL SERVICES

§ 4.1 Supplemental Services

§ 4.1.1 The services listed below are not included in Basic Services but may be required for the Project. The Architect shall provide the listed Supplemental Services only if specifically designated in the table below as the Architect's responsibility, and the Owner shall compensate the Architect as provided in Section 11.2. Unless otherwise specifically addressed in this Agreement, if neither the Owner nor the Architect is designated, the parties agree that the listed Supplemental Service is not being provided for the Project.

(Designate the Architect's Supplemental Services and the Owner's Supplemental Services required for the Project by indicating whether the Architect or Owner shall be responsible for providing the identified Supplemental Service. Insert a description of the Supplemental Services in Section 4.1.2 below or attach the description of services as an exhibit to this Agreement.)

Supplemental Services	Responsibility (Architect, Owner, or not provided)
§ 4.1.1.1 Programming, Planning	**Architect**

(Row deleted)

Init.

/

AIA Document B133™ – 2019. Copyright © 2014, and 2019 by The American Institute of Architects. All rights reserved. The "American Institute of Architects," "AIA," the AIA Logo, and "AIA Contract Documents" are registered trademarks and may not be used without permission. This document was produced by AIA software at 09:18:54 ET on 02/11/2022 under Order No.2998476739 which expires on 09/25/2022, is not for resale, is licensed for one-time use only, and may only be used in accordance with the AIA Contract Documents® Terms of Service. To report copyright violations, e-mail copyright@aia.org.
User Notes: (1664241209)

§ 4.1.1.2 Community Outreach	Architect
§ 4.1.1.3 Furniture Specifications, Procurement and Installation Oversight	Architect

(Row deleted)

§ 4.1.1.4 Audio Visual Infrastructure and Audio-Visual Systems Design	Architect

(Row deleted)

§ 4.1.1.5 Structured Cabling Infrastructure and Structured Cabling System Design	Architect

(Row deleted)

§ 4.1.1.6 Security and Safety Systems Design	Architect

(Row deleted)

§ 4.1.1.7 Signage and Wayfinding and Environmental Graphics	Architect

(Row deleted)

§ 4.1.1.8 Professional Renderings (3 Views)	Architect

(Row deleted)

§ 4.1.1.9 Lighting Design (specialty lighting)	Architect

(Rows deleted)

§ 4.1.2 Description of Supplemental Services

§ 4.1.2.1 A description of each Supplemental Service identified in Section 4.1.1 as the Architect's responsibility is provided below.

See Attached Fee Proposal

(Describe in detail the Architect's Supplemental Services identified in Section 4.1.1 or, if set forth in an exhibit, identify the exhibit. The AIA publishes a number of Standard Form of Architect's Services documents that can be included as an exhibit to describe the Architect's Supplemental Services.)

§ 4.1.2.2 A description of each Supplemental Service identified in Section 4.1.1 as the Owner's responsibility is provided below.

(Describe in detail the Owner's Supplemental Services identified in Section 4.1.1 or, if set forth in an exhibit, identify the exhibit.)

§ 4.1.3 If the Owner identified a Sustainable Objective in Article 1, the Architect shall provide, as a Supplemental Service, the Sustainability Services required in AIA Document E234™–2019, Sustainable Projects Exhibit, Construction Manager as Constructor Edition, attached to this Agreement. The Owner shall compensate the Architect as provided in Section 11.2.

§ 4.2 Architect's Additional Services

The Architect may provide Additional Services after execution of this Agreement without invalidating the Agreement. Except for services required due to the fault of the Architect, any Additional Services provided in accordance with this Section 4.2 shall entitle the Architect to compensation pursuant to Section 11.3 and an appropriate adjustment in the Architect's schedule.

§ 4.2.1 Upon recognizing the need to perform the following Additional Services, the Architect shall notify the Owner with reasonable promptness and explain the facts and circumstances giving rise to the need. The Architect shall not proceed to provide the following Additional Services until the Architect receives the Owner's written authorization:

.1 Services necessitated by a change in the Initial Information, previous instructions or recommendations given by the Construction Manager or the Owner, approvals given by the Owner, or a material change in the Project including size, quality, complexity, the Owner's schedule or budget for Cost of the Work, or bid packages in addition to those listed in Section 1.1.6;

AIA Document B133™ – 2019. Copyright © 2014, and 2019 by The American Institute of Architects. All rights reserved. The "American Institute of Architects," "AIA," the AIA Logo, and "AIA Contract Documents" are registered trademarks and may not be used without permission. This document was produced by AIA software at 09:18:54 ET on 02/11/2022 under Order No.2998476739 which expires on 09/25/2022, is not for resale, is licensed for one-time use only, and may only be used in accordance with the AIA Contract Documents® Terms of Service. To report copyright violations, e-mail copyright@aia.org.
User Notes: (1664241209)

.2 Making revisions in Drawings, Specifications, or other documents (as required pursuant to Section 6.7), when such revisions are required because the Construction Manager's estimate of the Cost of the Work, Guaranteed Maximum Price proposal, or Control Estimate exceeds the Owner's budget, except where such excess is due to changes initiated by the Architect in scope, capacities of basic systems, or the kinds and quality of materials, finishes, or equipment;

.3 Services necessitated by the enactment or revision of codes, laws, or regulations, including changing or editing previously prepared Instruments of Service;

.4 Changing or editing previously prepared Instruments of Service necessitated by official interpretations of applicable codes, laws or regulations that are either (a) contrary to specific interpretations by the applicable authorities having jurisdiction made prior to the issuance of the building permit, or (b) contrary to requirements of the Instruments of Service when those Instruments of Service were prepared in accordance with the applicable standard of care;

.5 Services necessitated by decisions of the Owner or Construction Manager not rendered in a timely manner or any other failure of performance on the part of the Owner or the Owner's consultants or contractors;

.6 Preparing digital models or other design documentation for transmission to the Owner's consultants and contractors, or to other Owner- authorized recipients;

.7 Preparation of design and documentation for alternate bid or proposal requests proposed by the Owner or Construction Manager;

.8 Preparation for, and attendance at, a public presentation, meeting or hearing;

.9 Preparation for, and attendance at, a dispute resolution proceeding or legal proceeding, except where the Architect is party thereto;

.10 Consultation concerning replacement of Work resulting from fire or other cause during construction; or

.11 Assistance to the Initial Decision Maker, if other than the Architect;

.12 Services necessitated by replacement of the Construction Manager or conversion of the Construction Manager as constructor project delivery method to an alternative project delivery method;

.13 Services necessitated by the Owner's delay in engaging the Construction Manager;

.14 Making revisions to the Drawings, Specifications, and other documents resulting from agreed-upon assumptions and clarifications included in the Guaranteed Maximum Price Amendment or Control Estimate; and

.15 Making revisions to the Drawings, Specifications, and other documents resulting from substitutions included in the Guaranteed Maximum Price Amendment or Control Estimate.

§ 4.2.2 To avoid delay in the Construction Phase, the Architect shall provide the following Additional Services, notify the Owner with reasonable promptness, and explain the facts and circumstances giving rise to the need. If, upon receipt of the Architect's notice, the Owner determines that all or parts of the services are not required, the Owner shall give prompt written notice to the Architect of the Owner's determination. The Owner shall compensate the Architect for the services provided prior to the Architect's receipt of the Owner's notice:

.1 Reviewing a Construction Manager's submittal out of sequence from the submittal schedule approved by the Architect;

.2 Responding to the Construction Manager's requests for information that are not prepared in accordance with the Contract Documents or where such information is available to the Construction Manager from a careful study and comparison of the Contract Documents, field conditions, other Owner-provided information, Construction Manager-prepared coordination drawings, or prior Project correspondence or documentation;

.3 Preparing Change Orders, and Construction Change Directives that require evaluation of the Construction Manager's proposals and supporting data, or the preparation or revision of Instruments of Service;

.4 Evaluating an extensive number of Claims as the Initial Decision Maker; or

.5 Evaluating substitutions proposed by the Owner or Construction Manager and making subsequent revisions to Instruments of Service resulting therefrom.

§ 4.2.3 The Architect shall provide Construction Phase Services exceeding the limits set forth below as Additional Services. When the limits below are reached, the Architect shall notify the Owner:

.1 Three (3) reviews of each Shop Drawing, Product Data item, sample and similar submittals of the Construction Manager

.2 Twenty-Eight (28) visits to the site by the Architect during construction

AIA Document B133™ – 2019. Copyright © 2014, and 2019 by The American Institute of Architects. All rights reserved. The "American Institute of Architects," "AIA," the AIA Logo, and "AIA Contract Documents" are registered trademarks and may not be used without permission. This document was produced by AIA software at 09:18:54 ET on 02/11/2022 under Order No.2998476739 which expires on 09/25/2022, is not for resale, is licensed for one-time use only, and may only be used in accordance with the AIA Contract Documents® Terms of Service. To report copyright violations, e-mail copyright@aia.org.
User Notes: (1664241209)

.3 Three (3) inspections for any portion of the Work to determine whether such portion of the Work is substantially complete in accordance with the requirements of the Contract Documents

.4 Four (4) inspections for any portion of the Work to determine final completion

§ 4.2.4 Except for services required under Section 3.6.6.5 and those services that do not exceed the limits set forth in Section 4.2.3, Construction Phase Services provided more than 60 days after (1) the date of Substantial Completion of the Work or (2) the initial date of Substantial Completion identified in the agreement between the Owner and Contractor, whichever is earlier, shall be compensated as Additional Services to the extent the Architect incurs additional cost in providing those Construction Phase Services.

§ 4.2.5 If the services covered by this Agreement have not been completed within Thirteen (13) months of the date of this Agreement, through no fault of the Architect, extension of the Architect's services beyond that time shall be compensated as Additional Services.

§ 4.2.6 During the schematic phase, design development phase, construction documents phase, bidding or negotiation phase or construction phase work, and any other design work or documents provided by Architect as described in Section 3 above, should the Owner request revisions to the design work or documents prepared for that phase which were previously approved, these revisions will be made subject to adjustment to the Architect's compensation where Architect can demonstrate that the work previously completed was authorized, done at the Owner's direction, or where the Construction Manager and Architect have agreed upon a budget in advance, using the Program parameters. Further, the Architect shall be entitled to additional compensation to the extent Owner requests revisions based on a requested change in the aesthetic character of the design previously approved or where a budget has already been established, and the cost of labor, materials, and/or equipment increases through no fault of Architect, requiring redesign to meet the Owner's budget. Before performing these services, Architect must receive prior written approval from the Owner and Owner must agree to the estimated costs associated with said services.

ARTICLE 5 OWNER'S RESPONSIBILITIES

§ 5.1 Unless otherwise provided for under this Agreement, the Owner shall provide information in a timely manner regarding requirements for and limitations on the Project, including a written program which shall set forth the Owner's objectives; schedule; constraints and criteria, including space requirements and relationships; flexibility; expandability; special equipment; systems; and site requirements.

§ 5.2 The Owner shall retain a Construction Manager to provide services, duties, and responsibilities as described in the agreement selected in Section 1.1.5.

§ 5.3 The Owner shall establish the Owner's budget for the Project, including (1) the budget for the Cost of the Work as defined in Section 6.1; (2) the Owner's other costs; and, (3) reasonable contingencies related to all of these costs. The Owner shall update the Owner's budget for the Project as necessary throughout the duration of the Project until final completion. If the Owner significantly increases or decreases the Owner's budget for the Cost of the Work, the Owner shall notify the Architect and Construction Manager. The Owner and the Architect, in consultation with the Construction Manager, shall thereafter agree to a corresponding change in the Project's scope and quality.

§ 5.3.1 The Owner acknowledges that accelerated, phased or fast-track scheduling provides a benefit, but also carries with it associated risks. Such risks include the Owner incurring costs for the Architect to coordinate and redesign portions of the Project affected by procuring or installing elements of the Project prior to the completion of all relevant Construction Documents, and costs for the Construction Manager to remove and replace previously installed Work. If the Owner selects accelerated, phased or fast-track scheduling, the Owner agrees to include in the budget for the Project sufficient contingencies to cover such costs, including payment to Architect as Additional Services.

§ 5.4 The Owner shall identify a representative authorized to act on the Owner's behalf with respect to the Project. The Owner shall render decisions and approve the Architect's submittals in a timely manner in order to avoid unreasonable delay in the orderly and sequential progress of the Architect's services.

§ 5.5 The Owner shall furnish surveys to describe physical characteristics, legal limitations and utility locations for the site of the Project, and a written legal description of the site. The surveys and legal information shall include, as applicable, grades and lines of streets, alleys, pavements and adjoining property and structures; designated wetlands;

AIA Document B133™ – 2019. Copyright © 2014, and 2019 by The American Institute of Architects. All rights reserved. The "American Institute of Architects," "AIA," the AIA Logo, and "AIA Contract Documents" are registered trademarks and may not be used without permission. This document was produced by AIA software at 09:18:54 ET on 02/11/2022 under Order No.2998476739 which expires on 09/25/2022, is not for resale, is licensed for one-time use only, and may only be used in accordance with the AIA Contract Documents® Terms of Service. To report copyright violations, e-mail copyright@aia.org.
User Notes: (1664241209)

adjacent drainage; rights-of-way, restrictions, easements, encroachments, zoning, deed restrictions, boundaries and contours of the site; locations, dimensions, and other necessary data with respect to existing buildings, other improvements and trees; and information concerning available utility services and lines, both public and private, above and below grade, including inverts and depths. All the information on the survey shall be referenced to a Project benchmark.

§ 5.6 The Owner shall furnish services of geotechnical engineers, which may include test borings, test pits, determinations of soil bearing values, percolation tests, evaluations of hazardous materials, seismic evaluation, ground corrosion tests and resistivity tests, including necessary operations for anticipating subsoil conditions, with written reports and appropriate recommendations.

§ 5.7 The Owner shall provide the Supplemental Services designated as the Owner's responsibility in Section 4.1.1.

§ 5.8 If the Owner identified a Sustainable Objective in Article 1, the Owner shall fulfill its responsibilities as required in AIA Document E234™–2019, Sustainable Projects Exhibit, Construction Manager as Constructor Edition, attached to this Agreement.

§ 5.9 The Owner shall coordinate the services of its own consultants with those services provided by the Architect. Upon the Architect's request, the Owner shall furnish copies of the scope of services in the contracts between the Owner and the Owner's consultants. The Owner shall furnish the services of consultants other than those designated as the responsibility of the Architect in this Agreement, or authorize the Architect to furnish them as an Additional Service, when the Architect requests such services and demonstrates that they are reasonably required by the scope of the Project. The Owner shall require that its consultants and contractors maintain insurance, including professional liability insurance, as appropriate to the services or work provided.

§ 5.10 The Owner shall furnish tests, inspections and reports required by law or the Contract Documents, such as structural, mechanical, and chemical tests, tests for air and water pollution, and tests for hazardous materials.

§ 5.11 The Owner shall furnish all legal, insurance and accounting services, including auditing services, that may be reasonably necessary at any time for the Project to meet the Owner's needs and interests.

§ 5.12 The Owner shall provide prompt written notice to the Architect and Construction Manager if the Owner becomes aware of any fault or defect in the Project, including errors, omissions or inconsistencies in the Architect's Instruments of Service.

§ 5.13 The Owner shall contemporaneously provide the Architect with any communications with the Construction Manager that relate to or affect the Architect's services or professional responsibilities. The Owner shall promptly notify the Architect of the substance of any direct communications between the Owner and the Construction Manager otherwise relating to the Project. Communications by and with the Architect's consultants shall be through the Architect.

§ 5.14 The Owner shall coordinate the Architect's duties and responsibilities set forth in the Agreement between the Owner and the Construction Manager with the Architect's services set forth in this Agreement. The Owner shall provide the Architect a copy of the executed agreement between the Owner and Construction Manager, including the General Conditions of the Contract for Construction.

§ 5.15 The Owner shall provide the Architect access to the Project site prior to commencement of the Work and shall obligate the Construction Manager to provide the Architect access to the Work wherever it is in preparation or progress.

§ 5.16 Within 15 days after receipt of a written request from the Architect, the Owner shall furnish the requested information as necessary.

ARTICLE 6 COST OF THE WORK

§ 6.1 For purposes of this Agreement, the Cost of the Work shall be the total cost to the Owner to construct all elements of the Project designed or specified by the Architect and shall include the Construction Manager's general conditions costs, overhead, and profit. The Cost of the Work also includes the reasonable value of labor, materials, and equipment, donated to, or otherwise furnished by, the Owner. The Cost of the Work does not include the compensation of the Architect; the

AIA Document B133™ – 2019. Copyright © 2014, and 2019 by The American Institute of Architects. All rights reserved. The "American Institute of Architects," "AIA," the AIA Logo, and "AIA Contract Documents" are registered trademarks and may not be used without permission. This document was produced by AIA software at 09:18:54 ET on 02/11/2022 under Order No.2998476739 which expires on 09/25/2022, is not for resale, is licensed for one-time use only, and may only be used in accordance with the AIA Contract Documents® Terms of Service. To report copyright violations, e-mail copyright@aia.org.
User Notes: (1664241209)

compensation of the Construction Manager for Preconstruction Phase services; the costs of the land, rights-of-way, financing, or contingencies for changes in the Work; or other costs that are the responsibility of the Owner.

§ 6.2 The Owner's budget for the Cost of the Work is provided in the Initial Information, and shall be adjusted throughout the Project as required under Sections 5.3 and 6.4. Evaluations of the Owner's budget for the Cost of the Work represent the Architect's judgment as a design professional.

§ 6.3 The Owner shall require the Construction Manager to include appropriate contingencies for design, bidding or negotiating, price escalation, and market conditions in estimates of the Cost of the Work. The Architect shall be entitled to rely on the accuracy and completeness of estimates of the Cost of the Work the Construction Manager prepares as the Architect progresses with its Basic Services. The Architect shall prepare, as an Additional Service, revisions to the Drawings, Specifications or other documents required due to the Construction Manager's inaccuracies or incompleteness in preparing cost estimates, or due to market conditions the Architect could not reasonably anticipate. The Architect may review the Construction Manager's estimates solely for the Architect's guidance in completion of its services, however, the Architect shall report to the Owner any material inaccuracies and inconsistencies noted during any such review.

§ 6.3.1 If the Architect is providing cost estimating services as a Supplemental Service, and a discrepancy exists between the Construction Manager's cost estimates and the Architect's cost estimates, the Architect and the Construction Manager shall work together to reconcile the cost estimates.

§ 6.4 If, prior to the conclusion of the Design Development Phase, the Construction Manager's estimate of the Cost of the Work exceeds the Owner's budget for the Cost of the Work, the Architect, in consultation with the Construction Manager, shall make appropriate recommendations to the Owner to adjust the Project's size, quality or budget for the Cost of the Work, and the Owner shall cooperate with the Architect in making such adjustments.

§ 6.5 If the Construction Manager's estimate of the Cost of the Work at the conclusion of the Design Development Phase exceeds the Owner's budget for the Cost of the Work, the Owner shall

- **.1** give written approval of an increase in the budget for the Cost of the Work;
- **.2** terminate in accordance with Section 9.5;
- **.3** in consultation with the Architect and Construction Manager, revise the Project program, scope, or quality as required to reduce the Cost of the Work; or
- **.4** implement any other mutually acceptable alternative.

§ 6.6 If the Owner chooses to proceed under Section 6.5.3, the Architect, without additional compensation, shall incorporate the revisions in the Construction Documents Phase as necessary to comply with the Owner's budget for the Cost of the Work at the conclusion of the Design Development Phase Services, or the budget as adjusted under Section 6.5.1. The Architect's revisions in the Construction Documents Phase shall be the limit of the Architect's responsibility under this Article 6.

§ 6.7 After incorporation of modifications under Section 6.6, the Architect shall, as an Additional Service, make any required revisions to the Drawings, Specifications or other documents necessitated by the Construction Manager's subsequent cost estimates, the Guaranteed Maximum Price proposal, or Control Estimate that exceed the Owner's budget for the Cost of the Work, except when the excess is due to changes initiated by the Architect in scope, basic systems, or the kinds and quality of materials, finishes or equipment.

ARTICLE 7 COPYRIGHTS AND LICENSES

§ 7.1 The Architect and the Owner warrant that in transmitting Instruments of Service, or any other information, the transmitting party is the copyright owner of such information or has permission from the copyright owner to transmit such information for its use on the Project.

§ 7.2 The Architect and the Architect's consultants shall be deemed the authors and owners of their respective Instruments of Service, including the Drawings and Specifications, and shall retain all common law, statutory and other reserved rights, including copyrights. Submission or distribution of Instruments of Service to meet official regulatory requirements or for similar purposes in connection with the Project is not to be construed as publication in derogation of the reserved rights of the Architect and the Architect's consultants.

AIA Document B133™ – 2019. Copyright © 2014, and 2019 by The American Institute of Architects. All rights reserved. The "American Institute of Architects," "AIA," the AIA Logo, and "AIA Contract Documents" are registered trademarks and may not be used without permission. This document was produced by AIA software at 09:18:54 ET on 02/11/2022 under Order No.2998476739 which expires on 09/25/2022, is not for resale, is licensed for one-time use only, and may only be used in accordance with the AIA Contract Documents® Terms of Service. To report copyright violations, e-mail copyright@aia.org.
User Notes: (1664241209)

§ 7.3 The Architect grants to the Owner a nonexclusive license to use the Architect's Instruments of Service solely and exclusively for purposes of constructing, using, maintaining, altering and adding to the Project, provided that the Owner substantially performs its obligations under this Agreement, including prompt payment of all sums due, pursuant to Article 9 and Article 11. The Architect shall obtain similar nonexclusive licenses from the Architect's consultants consistent with this Agreement. The license granted under this section permits the Owner to authorize the Construction Manager, Subcontractors, Sub-subcontractors, and suppliers, as well as the Owner's consultants and separate contractors, to reproduce applicable portions of the Instruments of Service, subject to any protocols established pursuant to Section 1.3, solely and exclusively for use in performing services or construction for the Project. If the Architect rightfully terminates this Agreement for cause as provided in Section 9.4, the license granted in this Section 7.3 shall terminate.

§ 7.3.1 In the event the Owner uses the Instruments of Service without retaining the authors of the Instruments of Service, the Owner releases the Architect and Architect's consultant(s) from all claims and causes of action arising from such uses. The Owner, to the extent permitted by law, further agrees to indemnify and hold harmless the Architect and its consultants from all costs and expenses, including the cost of defense, related to claims and causes of action asserted by any third person or entity to the extent such costs and expenses arise from the Owner's use of the Instruments of Service under this Section 7.3.1. The terms of this Section 7.3.1 shall not apply if the Owner rightfully terminates this Agreement for cause under Section 9.4.

§ 7.4 Except for the licenses granted in this Article 7, no other license or right shall be deemed granted or implied under this Agreement. The Owner shall not assign, delegate, sublicense, pledge or otherwise transfer any license granted herein to another party without the prior written agreement of the Architect. Any unauthorized use of the Instruments of Service shall be at the Owner's sole risk and without liability to the Architect and the Architect's consultants. Further, Owner shall be responsible to compensate Architect for said unauthorized use of the Instruments of Service.

(Paragraph deleted)

ARTICLE 8 CLAIMS AND DISPUTES

§ 8.1 General

§ 8.1.1 The Owner and Architect shall commence all claims and causes of action against the other and arising out of or related to this Agreement, whether in contract, tort, or otherwise, in accordance with the requirements of the binding dispute resolution method selected in this Agreement and within the period specified by applicable law, but in any case not more than six (6) years after the date of Substantial Completion of the Work. The Owner and Architect waive all claims and causes of action not commenced in accordance with this Section 8.1.1.

§ 8.1.2 To the extent damages are covered by property insurance, the Owner and Architect waive all rights against each other and against the contractors, consultants, agents and employees of the other for damages, except such rights as they may have to the proceeds of such insurance as set forth in AIA Document A201–2017, General Conditions of the Contract for Construction. The Owner or the Architect, as appropriate, shall require of the Construction Manager, contractors, consultants, agents and employees of any of them, similar waivers in favor of the other parties enumerated herein.

§ 8.1.3 The Architect shall indemnify and hold the Owner and the Owner's officers and employees harmless from and against damages, losses and judgments arising from claims by third parties, including reasonable attorneys' fees and expenses recoverable under applicable law, but only to the extent they are caused by the negligent acts or omissions of the Architect, its employees and its consultants in the performance of professional services under this Agreement. The Architect's obligation to indemnify and hold the Owner and the Owner's officers and employees harmless does not include a duty to defend.

(Paragraph deleted)

§ 8.2 Mediation

§ 8.2.1 Any claim, dispute, or other matter in question arising out of or related to this Agreement shall be subject to mediation as a condition precedent to binding dispute resolution. If such matter relates to or is the subject of a lien arising out of the Architect's services, the Architect may proceed in accordance with applicable law to comply with the lien notice or filing deadlines prior to resolution of the matter by mediation or by binding dispute resolution.

§ 8.2.2 The Owner and Architect shall endeavor to resolve claims, disputes and other matters in question between them by mediation, which, unless the parties mutually agree otherwise, shall be administered by a mutually agreed upon mediator in accordance with the American Arbitration Association's ("AAA") Construction Industry Mediation Procedures in effect on the date of this Agreement. A request for mediation shall be made in writing, delivered to the other party to this

AIA Document B133™ – 2019. Copyright © 2014, and 2019 by The American Institute of Architects. All rights reserved. The "American Institute of Architects," "AIA," the AIA Logo, and "AIA Contract Documents" are registered trademarks and may not be used without permission. This document was produced by AIA software at 09:18:54 ET on 02/11/2022 under Order No.2998476739 which expires on 09/25/2022, is not for resale, is licensed for one-time use only, and may only be used in accordance with the AIA Contract Documents® Terms of Service. To report copyright violations, e-mail copyright@aia.org.
User Notes: (1664241209)

Agreement, and filed with the person or entity administering the mediation. The request may be made concurrently with the filing of a complaint or other appropriate demand for binding dispute resolution but, in such event, mediation shall proceed in advance of binding dispute resolution proceedings, which shall be stayed pending mediation for a period of 60 days from the date of filing, unless stayed for a longer period by agreement of the parties or court order. If an arbitration proceeding is stayed pursuant to this section, the parties may nonetheless proceed to the selection of the arbitrator(s) and agree upon a schedule for later proceedings.

§ 8.2.3 The parties shall share the mediator's fee and any filing fees equally. The mediation shall be held in the place where the Project is located, unless another location is mutually agreed upon. Agreements reached in mediation shall be enforceable as settlement agreements in any court having jurisdiction thereof.

§ 8.2.4 If the parties do not resolve a dispute through mediation pursuant to this Section 8.2, the method of binding dispute resolution shall be the following:
(Check the appropriate box.)

[ ] Arbitration pursuant to Section 8.3 of this Agreement

[X] Litigation in a court of competent jurisdiction

[ ] Other: *(Specify)*

If the Owner and Architect do not select a method of binding dispute resolution, or do not subsequently agree in writing to a binding dispute resolution method other than litigation, the dispute will be resolved in a court of competent jurisdiction.

(Paragraphs deleted)
§ 8.3.4 Consolidation or Joinder
§ 8.3.4.1 Either party, at its sole discretion, may consolidate an arbitration conducted under this Agreement with any other arbitration to which it is a party provided that (1) the arbitration agreement governing the other arbitration permits consolidation; (2) the arbitrations to be consolidated substantially involve common questions of law or fact; and (3) the arbitrations employ materially similar procedural rules and methods for selecting arbitrator(s).

§ 8.3.4.2 Either party, at its sole discretion, may include by joinder persons or entities substantially involved in a common question of law or fact whose presence is required if complete relief is to be accorded in arbitration, provided that the party sought to be joined consents in writing to such joinder. Consent to arbitration involving an additional person or entity shall not constitute consent to arbitration of any claim, dispute or other matter in question not described in the written consent.

§ 8.3.4.3 The Owner and Architect grant to any person or entity made a party to an arbitration conducted under this Section 8.3, whether by joinder or consolidation, the same rights of joinder and consolidation as the Owner and Architect under this Agreement.

§ 8.4 The provisions of this Article 8 shall survive the termination of this Agreement.

ARTICLE 9 TERMINATION OR SUSPENSION

§ 9.1 If the Owner fails to make payments to the Architect in accordance with this Agreement, such failure shall be considered substantial nonperformance and cause for termination or, at the Architect's option, cause for suspension of performance of services under this Agreement. If the Architect elects to suspend services, the Architect shall give seven days' written notice to the Owner before suspending services. In the event of a suspension of services arising through no fault of the Architect, the Architect shall have no liability to the Owner for delay or damage caused by the Owner because of such suspension of services. Before resuming services, the Owner shall pay the Architect all sums due prior to suspension and any expenses incurred in the interruption and resumption of the Architect's services. The Architect's fees for the remaining services and the time schedules shall be equitably adjusted.

§ 9.2 If the Owner suspends the Project, the Architect shall be compensated for services performed prior to notice of such suspension. When the Project is resumed, the Architect shall be compensated for expenses incurred in the interruption and resumption of the Architect's services. The Architect's fees for the remaining services and the time schedules shall be equitably adjusted.

AIA Document B133™ – 2019. Copyright © 2014, and 2019 by The American Institute of Architects. All rights reserved. The "American Institute of Architects," "AIA," the AIA Logo, and "AIA Contract Documents" are registered trademarks and may not be used without permission. This document was produced by AIA software at 09:18:54 ET on 02/11/2022 under Order No.2998476739 which expires on 09/25/2022, is not for resale, is licensed for one-time use only, and may only be used in accordance with the AIA Contract Documents® Terms of Service. To report copyright violations, e-mail copyright@aia.org.
User Notes: (1664241209)

§ 9.3 If the Owner suspends the Project for more than 90 cumulative days for reasons other than the fault of the Architect, the Architect may terminate this Agreement by giving not less than seven days' written notice.

§ 9.4 Either party may terminate this Agreement upon not less than seven days' written notice should the other party fail substantially to perform in accordance with the terms of this Agreement through no fault of the party initiating the termination.

§ 9.5 The Owner may terminate this Agreement upon not less than seven days' written notice to the Architect for the Owner's convenience in the event the Owner looses its funding for the Project.

§ 9.6 If the Owner terminates this Agreement for its convenience pursuant to Section 9.5, or the Architect terminates this Agreement pursuant to Sections 9.1 or 9.3, the Owner shall compensate the Architect for services performed prior to Architect's receipt of the notice of termination, and Reimbursable Expenses incurred and costs attributable to termination, including the costs attributable to the Architect's termination of consultant agreements.

§ 9.7 In addition to any amounts paid under Section 9.6, if the Owner terminates this Agreement for its convenience pursuant to Section 9.5, or the Architect terminates this Agreement pursuant to Section 9.3, the Owner shall pay to the Architect the following fees:
(Set forth below the amount of any termination or licensing fee, or the method for determining any termination or licensing fee.)

.1 Termination Fee:

.2 Licensing Fee if the Owner intends to continue using the Architect's Instruments of Service:

(Paragraph deleted)
§ 9.9 The Owner's rights to use the Architect's Instruments of Service in the event of a termination of this Agreement are set forth in Article 7.

ARTICLE 10 MISCELLANEOUS PROVISIONS

§ 10.1 This Agreement shall be governed and construed in accordance with the laws of the State of North Carolina. Any action or proceeding arising under this agreement shall be filed and heard in the Superior Court of Lee County.

§ 10.2 Terms in this Agreement shall have the same meaning as those in AIA Document A201–2017, General Conditions of the Contract for Construction, except as modified in this Agreement. The term "Contractor" as used in A201–2017 shall mean the Construction Manager.

§ 10.3 The Owner and Architect, respectively, bind themselves, their agents, successors, assigns, and legal representatives to this Agreement. Neither the Owner nor the Architect shall assign this Agreement without the written consent of the other, except that the Owner may assign this Agreement to a lender providing financing for the Project if the lender agrees to assume the Owner's rights and obligations under this Agreement, including any payments due to the Architect by the Owner prior to the assignment.

§ 10.4 If the Owner requests the Architect to execute certificates, the proposed language of such certificates shall be submitted to the Architect for review at least 14 days prior to the requested dates of execution. If the Owner requests the Architect to execute consents reasonably required to facilitate assignment to a lender, the Architect shall execute all such consents that are consistent with this Agreement, provided the proposed consent is submitted to the Architect for review at least 14 days prior to execution. The Architect shall not be required to execute certificates or consents that would require knowledge, services, or responsibilities beyond the scope of this Agreement.

AIA Document B133™ – 2019. Copyright © 2014, and 2019 by The American Institute of Architects. All rights reserved. The "American Institute of Architects," "AIA," the AIA Logo, and "AIA Contract Documents" are registered trademarks and may not be used without permission. This document was produced by AIA software at 09:18:54 ET on 02/11/2022 under Order No.2998476739 which expires on 09/25/2022, is not for resale, is licensed for one-time use only, and may only be used in accordance with the AIA Contract Documents® Terms of Service. To report copyright violations, e-mail copyright@aia.org.
User Notes: (1664241209)

§ **10.5** Nothing contained in this Agreement shall create a contractual relationship with, or a cause of action in favor of, a third party against either the Owner or Architect.

§ **10.6** Unless otherwise required in this Agreement, the Architect shall have no responsibility for the discovery, presence, handling, removal or disposal of, or exposure of persons to, hazardous materials or toxic substances in any form at the Project site.

§ **10.7** The Architect shall have the right to include photographic or artistic representations of the design of the Project among the Architect's promotional and professional materials. The Architect shall be given reasonable access to the completed Project to make such representations. However, the Architect's materials shall not include the Owner's confidential or proprietary information if the Owner has previously advised the Architect in writing of the specific information considered by the Owner to be confidential or proprietary. The Owner shall provide professional credit for the Architect in the Owner's promotional materials for the Project. This Section 10.7 shall survive the termination of this Agreement unless the Owner terminates this Agreement for cause pursuant to Section 9.4.

§ **10.8** If the Architect or Owner receives information specifically designated as "confidential" or "business proprietary," the receiving party shall keep such information strictly confidential and shall not disclose it to any other person except as set forth in Section 10.8.1, unless the documents must be disclosed pursuant to North Carolina's public record laws.

§ **10.8.1** The receiving party may disclose "confidential" or "business proprietary" information after 7 days' notice to the other party, when required by law, arbitrator's order, or court order, including a subpoena or other form of compulsory legal process issued by a court or governmental entity, or to the extent such information is reasonably necessary for the receiving party to defend itself in any dispute. The receiving party may also disclose such information to its employees, consultants, or contractors in order to perform services or work solely and exclusively for the Project, provided those employees, consultants and contractors are subject to the restrictions on the disclosure and use of such information as set forth in this Section 10.8.

§ **10.9** The invalidity of any provision of the Agreement shall not invalidate the Agreement or its remaining provisions. If it is determined that any provision of the Agreement violates any law, or is otherwise invalid or unenforceable, then that provision shall be revised to the extent necessary to make that provision legal and enforceable. In such case the Agreement shall be construed, to the fullest extent permitted by law, to give effect to the parties' intentions and purposes in executing the Agreement.

ARTICLE 11 COMPENSATION

§ **11.1** For the Architect's Basic Services described under Article 3, the Owner shall compensate the Architect as follows:

.1 Stipulated Sum
(Insert amount)

ONE MILLION THREE HUNDRED EIGHTY-SEVEN THOUSAND FIVE HUNDRED DOLLARS ($1,387,500)

.2 Percentage Basis
(Insert percentage value)

( ) % of the Owner's budget for the Cost of the Work, as calculated in accordance with Section 11.6.

.3 Other
(Describe the method of compensation)

§ **11.2** For the Architect's Supplemental Services designated in Section 4.1.1 and for any Sustainability Services required pursuant to Section 4.1.3, the Owner shall compensate the Architect as follows:
(Insert amount of, or basis for, compensation. If necessary, list specific services to which particular methods of compensation apply.)

AIA Document B133™ – 2019. Copyright © 2014, and 2019 by The American Institute of Architects. All rights reserved. The "American Institute of Architects," "AIA," the AIA Logo, and "AIA Contract Documents" are registered trademarks and may not be used without permission. This document was produced by AIA software at 09:18:54 ET on 02/11/2022 under Order No.2998476739 which expires on 09/25/2022, is not for resale, is licensed for one-time use only, and may only be used in accordance with the AIA Contract Documents® Terms of Service. To report copyright violations, e-mail copyright@aia.org.
User Notes:

Supplemental Services	Cost
§ 4.1.1.1 Programming, Planning	$25,000
§ 4.1.1.2 Community Outreach	$8,000
§ 4.1.1.3 Furniture Specifications, Procurement and Installation Oversight	$62,500
§ 4.1.1.4 Audio Visual Infrastructure and Audio Visual Systems Design	$38,000
§ 4.1.1.5 Structured Cabling Infrastructure and Structured Cabling System Design	$18,000
§ 4.1.1.6 Security and Safety Systems Design	$26,000
§ 4.1.1.7 Signage and Wayfinding and Environmental Graphics	$25,000
§ 4.1.1.8 Professional Renderings (3 Views)	$20,000
§ 4.1.1.9 Lighting Design (specialty lighting)	$70,000

§ 11.3 For Additional Services that may arise during the course of the Project, including those under Section 4.2, the Owner shall compensate the Architect as follows:
(Insert amount of, or basis for, compensation.)

§ 11.4 Compensation for Supplemental and Additional Services of the Architect's consultants when not included in Sections 11.2 or 11.3, shall be the amount invoiced to the Architect plus percent (%), or as follows:
(Insert amount of, or basis for computing, Architect's consultants' compensation for Supplemental or Additional Services.)

§ 11.5 When compensation for Basic Services is based on a stipulated sum or a percentage basis, the proportion of compensation for each phase of services shall be as follows:

Schematic Design Phase	$161,250	percent (	15	%)
Design Development Phase	$215,000	percent (	20	%)
Construction Documents Phase	$322,500	percent (	30	%)
Procurement/ Bid Phase	$53,750	percent (	5	%)
Construction Phase	$268,750	percent (	30	%)
(Row deleted)				
Total Basic Compensation	one hundred	percent (	100	%)

The Owner acknowledges that with an accelerated Project delivery, multiple bid package process, or Construction Manager as constructor project delivery method, the Architect may be providing its services in multiple Phases simultaneously. Therefore, the Architect shall be permitted to invoice monthly in proportion to services performed in each Phase of Services, as appropriate.

§ 11.6 When compensation identified in Section 11.1 is on a percentage basis, progress payments for each phase of Basic Services shall be calculated by multiplying the percentages identified in this Article by the Owner's most recent budget for the Cost of the Work. Compensation paid in previous progress payments shall not be adjusted based on subsequent updates to the Owner's budget for the Cost of the Work.

§ 11.6.1 When compensation is on a percentage basis and any portions of the Project are deleted or otherwise not constructed, compensation for those portions of the Project shall be payable to the extent services are performed on those portions. The Architect shall be entitled to compensation in accordance with this Agreement for all services performed whether or not the Construction Phase is commenced.

AIA Document B133™ – 2019. Copyright © 2014, and 2019 by The American Institute of Architects. All rights reserved. The "American Institute of Architects," "AIA," the AIA Logo, and "AIA Contract Documents" are registered trademarks and may not be used without permission. This document was produced by AIA software at 09:18:54 ET on 02/11/2022 under Order No.2998476739 which expires on 09/25/2022, is not for resale, is licensed for one-time use only, and may only be used in accordance with the AIA Contract Documents® Terms of Service. To report copyright violations, e-mail copyright@aia.org.
User Notes: (1664241209)

§ 11.7 The hourly billing rates for services of the Architect and the Architect's consultants are set forth below. The rates shall be adjusted in accordance with the Architect's and Architect's consultants' normal review practices.
(If applicable, attach an exhibit of hourly billing rates or insert them below.)

Employee or Category	Rate
Victor Vines	$290
Robert Thomas	$215
Jeff Schroeder	$150
Dave Hardin	$150

§ 11.8 Compensation for Reimbursable Expenses
§ 11.8.1 Reimbursable Expenses are in addition to compensation for Basic, Supplemental, and Additional Services and include expenses incurred by the Architect and the Architect's consultants directly related to the Project, as follows:

- **.1** Transportation and authorized out-of-town travel and subsistence;
- **.2** Long distance services, dedicated data and communication services, teleconferences, Project web sites, and extranets;
- **.3** Permitting and other fees required by authorities having jurisdiction over the Project;
- **.4** Printing, reproductions, plots, and standard form documents;
- **.5** Postage, handling, and delivery;
- **.6** Expense of overtime work requiring higher than regular rates, if authorized in advance by the Owner;
- **.7** Renderings, physical models, mock-ups, professional photography, and presentation materials requested by the Owner or required for the Project;
- **.8** If required by the Owner, and with the Owner's prior written approval, the Architect's consultants' expenses of professional liability insurance dedicated exclusively to this Project, or the expense of additional insurance coverage or limits in excess of that normally maintained by the Architect's consultants;
- **.9** All taxes levied on professional services and on reimbursable expenses;
- **.10** Site office expenses;
- **.11** Registration fees and any other fees charged by the Certifying Authority or by other entities as necessary to achieve the Sustainable Objective; and
- **.12** Other similar Project-related expenditures.

§ 11.8.2 For Reimbursable Expenses the compensation shall be the expenses incurred by the Architect and the Architect's consultants plus percent (%) of the expenses incurred.

Expenses include actual expenditures made by Architect and/or its consultants on the Project including travel, meals, and overnight expenses in connection with the project, reproductions, photocopying, photography, handling of drawings, and other documents. The reimbursable expenses should not exceed Twenty Thousand Dollars ($20,000).

§ 11.9 Architect's Insurance. If the types and limits of coverage required in Section 2.6 are in addition to the types and limits the Architect normally maintains, the Owner shall pay the Architect for the additional costs incurred by the Architect for the additional coverages as set forth below:
(Insert the additional coverages the Architect is required to obtain in order to satisfy the requirements set forth in Section 2.6, and for which the Owner shall reimburse the Architect.)

§ 11.10 Payments to the Architect
§ 11.10.1 Initial Payments
§ 11.10.1.1 An initial payment of Zero Dollars ($ 0.00) shall be made upon execution of this Agreement and is the minimum payment under this Agreement. It shall be credited to the Owner's account in the final invoice.

§ 11.10.1.2 If a Sustainability Certification is part of the Sustainable Objective, an initial payment to the Architect of ($) shall be made upon execution of this Agreement for registration fees and other fees payable to the Certifying Authority and necessary to achieve the Sustainability Certification. The Architect's payments to the Certifying Authority shall be credited to the Owner's account at the time the expense is incurred.

AIA Document B133™ – 2019. Copyright © 2014, and 2019 by The American Institute of Architects. All rights reserved. The "American Institute of Architects," "AIA," the AIA Logo, and "AIA Contract Documents" are registered trademarks and may not be used without permission. This document was produced by AIA software at 09:18:54 ET on 02/11/2022 under Order No.2998476739 which expires on 09/25/2022, is not for resale, is licensed for one-time use only, and may only be used in accordance with the AIA Contract Documents® Terms of Service. To report copyright violations, e-mail copyright@aia.org.
User Notes: (1664241209)

§ 11.10.2 Progress Payments

§ 11.10.2.1 Unless otherwise agreed, payments for services shall be made monthly in proportion to services performed. Payments are due and payable upon presentation of the Architect's invoice. Amounts unpaid ( ) days after the invoice date shall bear interest at the rate entered below, or in the absence thereof at the legal rate prevailing from time to time at the principal place of business of the Architect.
(Insert rate of monthly or annual interest agreed upon.)

%

§ 11.10.2.2 The Owner shall not withhold amounts from the Architect's compensation to impose a penalty or liquidated damages on the Architect, or to offset sums requested by or paid to contractors for the cost of changes in the Work, unless the Architect agrees or has been found liable for the amounts in a binding dispute resolution proceeding.

§ 11.10.2.3 Records of Reimbursable Expenses, expenses pertaining to Supplemental and Additional Services, and services performed on the basis of hourly rates shall be available to the Owner at mutually convenient times.

ARTICLE 12 SPECIAL TERMS AND CONDITIONS

Special terms and conditions that modify this Agreement are as follows:
(Include other terms and conditions applicable to this Agreement.)

ARTICLE 13 SCOPE OF THE AGREEMENT

§ 13.1 This Agreement represents the entire and integrated agreement between the Owner and the Architect and supersedes all prior negotiations, representations or agreements, either written or oral. This Agreement may be amended only by written instrument signed by both the Owner and Architect.

§ 13.2 This Agreement is comprised of the following documents identified below:

.1 AIA Document B133™–2019, Standard Form Agreement Between Owner and Architect, Construction Manager as Constructor Edition

.2 AIA Document E203™–2013, Building Information Modeling and Digital Data Exhibit, dated as indicated below, if completed, or the following:
(Insert the date of the E203-2013 incorporated into this agreement.)

.3 Exhibits:
(Check the appropriate box for any exhibits incorporated into this Agreement.)

[ ] AIA Document E234™–2019, Sustainable Projects Exhibit, Construction Manager as Constructor Edition dated as indicated below.
(Insert the date of the E234-2019 incorporated into this agreement.)

[ ] Other Exhibits incorporated into this Agreement:
(Clearly identify any other exhibits incorporated into this Agreement, including any exhibits and scopes of services identified as exhibits in Section 4.1.2.)

.4 Other documents:
(List other documents, if any, forming part of the Agreement.)

AIA Document B133™ – 2019. Copyright © 2014, and 2019 by The American Institute of Architects. All rights reserved. The "American Institute of Architects," "AIA," the AIA Logo, and "AIA Contract Documents" are registered trademarks and may not be used without permission. This document was produced by AIA software at 09:18:54 ET on 02/11/2022 under Order No.2998476739 which expires on 09/25/2022, is not for resale, is licensed for one-time use only, and may only be used in accordance with the AIA Contract Documents® Terms of Service. To report copyright violations, e-mail copyright@aia.org.
User Notes: (1664241209)

This Agreement entered into as of the day and year first written above.

OWNER *(Signature)*	**ARCHITECT** *(Signature)*
	Victor Vines, AIA
(Printed name and title)	*(Printed name, title, and license number, if required)*

This instrument has been preaudited in ti
manner required by the Local Governme
Budget and Fiscal Contract Act.

Finance Officer, Lee County

AIA Document B133™ – 2019. Copyright © 2014, and 2019 by The American Institute of Architects. All rights reserved. The "American Institute of Architects," "AIA," the AIA Logo, and "AIA Contract Documents" are registered trademarks and may not be used without permission. This document was produced by AIA software at 09:18:54 ET on 02/11/2022 under Order No.2998476739 which expires on 09/25/2022, is not for resale, is licensed for one-time use only, and may only be used in accordance with the AIA Contract Documents® Terms of Service. To report copyright violations, e-mail copyright@aia.org.
User Notes: (1664241209)

Additions and Deletions Report for

AIA® Document B133™ – 2019

This Additions and Deletions Report, as defined on page 1 of the associated document, reproduces below all text the author has added to the standard form AIA document in order to complete it, as well as any text the author may have added to or deleted from the original AIA text. Added text is shown underlined. Deleted text is indicated with a horizontal line through the original AIA text.

Note: This Additions and Deletions Report is provided for information purposes only and is not incorporated into or constitute any part of the associated AIA document. This Additions and Deletions Report and its associated document were generated simultaneously by AIA software at 09:18:54 ET on 02/11/2022.

PAGE 1

AGREEMENT made as of the 10th day of February in the year 2022

...

Lee County Government
408 Summit Drive
Sanford, NC 27331-1988

...

Vines Architecture, Inc.
819 W. Hargett St., Suite 102
Raleigh, NC 27603
(919) 755-1975

...

Lee County Library 4841-01-21
Sanford, NC 27330

...

SAMET Corporation and Sanford Contractors
5430 Wade Park Blvd, Suite 110
Raleigh, NC 27607
919-703-0263

PAGE 2

~~*(Identify or describe pertinent information about the Project's physical characteristics, such as size; location; dimensions; geotechnical reports; site boundaries; topographic surveys; traffic and utility studies; availability of public and private utilities and services; legal description of the site, etc.)*~~Lee County Design Architect of Record for this project to provide professional programming/planning, design, and construction administration services for the County Library. The new library is expected to be designed as a 30,000 SF new building. The final building size will be concluded at the completion of the Programming. The Scope of Services (Basic and Supplemental Services) is outlined in Section 3. The new Library will be delivered through a Construction Management-at-Risk (CMAR) delivery method using SAMET/Sanford Contractors.

...

~~*(Provide total and, if known, a line item breakdown.)*~~*Total Budget is $16,000,000*

...

a. Programming and Planning. 21 February – 11 April 2022

Additions and Deletions Report for AIA Document B133™ – 2019. Copyright © 2014, and 2019 by The American Institute of Architects. All rights reserved. The "American Institute of Architects," "AIA," the AIA Logo, and "AIA Contract Documents" are registered trademarks and may not be used without permission. This document was produced by AIA software at 09:18:54 ET on 02/11/2022 under Order No.2998476739 which expires on 09/25/2022, is not for resale, is licensed for one-time use only, and may only be used in accordance with the AIA Contract Documents® Terms of Service. To report copyright violations, e-mail copyright@aia.org.
User Notes:

b.	Programming and Planning Report Submittal Complete.	11 April 2022
c.	Schematic Design Phase Complete.	15 July 2022
d.	Design Development Phase Complete.	18 November 2022
e.	Construction Documents Phase Complete.	7 July 2023
f.	Estimated Approved and Release for Bid.	10 July 2023
g.	GMP Recommendation to Award.	15 September 2023
h.	Notice to Proceed (construction).	29 September 2023
i.	Estimated Construction Period.	2 October 2023 – 31 October 2024
j.	Lee County Acceptance of Building.	1 November 2024
k.	FFE Installation.	1 November – 13 December 2024
l.	Owner Move-n Period.	1-31 December 2024

PAGE 3

a. Estimated Construction Period. 2 October 2023 – 31 October 2024

...

a. Lee County Acceptance of Building. 1 November 2024

...

a. See 1.1.4.1

...

[X] Lee County's Standard Form Agreement between Owner and Construction Manager in accordance with Lee County resolution for CMAR from 15 NOV 2021

[ ] AIA Document A133–2019, Standard Form of Agreement Between Owner and Construction Manager as Constructor where the basis of payment is the Cost of the Work Plus a Fee with a Guaranteed Maximum Price.

PAGE 4

Dr. John C. Crumpton.
Lee County Manager
408 Summit Dr. Sanford. NC 27330
919-718-4605 – Ext. 5508

...

Santiago Giraldo
Lee County Development Services Director
408 Summit Dr. Sanford. NC, 27330

Richard Oldham
Sanford Contractors
PO Box 9. Lemon Springs, NC 28355

...

SAMET Corporation and Sanford Contractors.
Richard Oldham
Sanford Contractors
5430 Wade Park Blvd, Suite 110
Raleigh, NC 27607

Additions and Deletions Report for AIA Document B133™ – 2019. Copyright © 2014, and 2019 by The American Institute of Architects. All rights reserved. The "American Institute of Architects," "AIA," the AIA Logo, and "AIA Contract Documents" are registered trademarks and may not be used without permission. This document was produced by AIA software at 09:18:54 ET on 02/11/2022 under Order No.2998476739 which expires on 09/25/2022, is not for resale, is licensed for one-time use only, and may only be used in accordance with the AIA Contract Documents® Terms of Service. To report copyright violations, e-mail copyright@aia.org.
User Notes:

919-703-0263

...

Victor Vines – Principal-in-Charge
Robert Thomas – Design Principal
Jeff Schroeder – Project Architect
Dave Hardin – Project Architect

PAGE 5

Lynch Mykins

.2 Mechanical Engineer:

Dewberry

~~**.2** Mechanical~~ **.3** Electrical Engineer:

Dewberry

.4 Civil Engineer:

Dewberry

.5 Landscape Architect:

~~**.3** Electrical Engineer:~~Surface 678

.6 Lightening Consultant:
Glimmer and Glow

.7 Cost Estimating

Palacio Collaborative

...

1. Audio Visual & Information Technology:

NV5

PAGE 6

§ 2.6.1 Commercial General Liability with policy limits of not less than Two Million ($ 2,000,000) for each occurrence and ~~($)~~ One Million ($ 1,000,000) in the aggregate for bodily injury and property damage.

§ 2.6.2 Automobile Liability covering vehicles owned, and non-owned vehicles used, by the Architect with policy limits of not less than ~~($)~~ Two Million ($2,000,000) per accident for bodily injury, death of any person, and property damage arising out of the ownership, maintenance and use of those motor vehicles, along with any other statutorily required automobile coverage.

...

§ 2.6.5 Employers' Liability with policy limits not less than ~~($) each accident, ($) each employee, and ($)~~ One Million ($ 1,000,000) each accident, One Million ($ 1,000,000) each employee, and One Million $ (1,000,000) policy limit.

Additions and Deletions Report for AIA Document B133™ – 2019. Copyright © 2014, and 2019 by The American Institute of Architects. All rights reserved. The "American Institute of Architects," "AIA," the AIA Logo, and "AIA Contract Documents" are registered trademarks and may not be used without permission. This document was produced by AIA software at 09:18:54 ET on 02/11/2022 under Order No.2998476739 which expires on 09/25/2022, is not for resale, is licensed for one-time use only, and may only be used in accordance with the AIA Contract Documents® Terms of Service. To report copyright violations, e-mail copyright@aia.org.
User Notes:

§ **2.6.6** Professional Liability covering negligent acts, errors and omissions in the performance of professional services, with policy limits of not less than ~~($)~~ Two Million ($2,000,000) per claim and ~~($)~~ Two Million ($2,000,000) in the aggregate.
PAGE 7

Basic Services	**Responsibility** *(Architect, Owner, or not provided)*
§ 3.1.1 Architectural Design	Architect
§ 3.1.2 Structural Design	Architect
§ 3.1.3 Mechanical/HVAC Building Design	Architect
§ 3.1.4 On Site Mechanical Site Utility Design	Architect
§ 3.1.5 Electrical Building Design	Architect
§ 3.1.6 Electrical Site Utility Design	Architect
§ 3.1.7 Fire Alarm Design	Architect
§ 3.1.8 Plumbing Design	Architect
§ 3.1.9 Civil Design	Architect
§ 3.1.10 Building Proximity Landscape & Site Lighting Design	Architect
§ 3.1.11 Cost Estimating and Scheduling	Architect
§ 3.1.12 Sustainability, Energy Efficiency Buildings	Architect

PAGE 9

§ **3.3.7** Upon receipt of the Construction Manager's review comments and cost estimate at the conclusion of the Schematic Design Phase, the Architect shall take action as required under Section 6.4, and request the Owner's approval of the Schematic Design Documents. If revisions to the Schematic Design Documents are required to comply with the Owner's budget for the Cost of the Work at the conclusion of the Schematic Design Phase, the Architect shall incorporate the required revisions in the Design Development ~~Phase.~~Phase for add'l services..
PAGE 12

Additions and Deletions Report for AIA Document B133™ – 2019. Copyright © 2014, and 2019 by The American Institute of Architects. All rights reserved. The "American Institute of Architects," "AIA," the AIA Logo, and "AIA Contract Documents" are registered trademarks and may not be used without permission. This document was produced by AIA software at 09:18:54 ET on 02/11/2022 under Order No.2998476739 which expires on 09/25/2022, is not for resale, is licensed for one-time use only, and may only be used in accordance with the AIA Contract Documents® Terms of Service. To report copyright violations, e-mail copyright@aia.org.
User Notes:

§ 4.1.1.1 Programming, Planning	Architect
~~§ 4.1.1.1 Assistance with Selection of Construction Manager~~	
§ 4.1.1.2 ~~Programming~~Community Outreach	Architect
§ 4.1.1.3 Furniture Specifications, Procurement and Installation Oversight	Architect
~~§ 4.1.1.3 Multiple Preliminary Designs~~	
§ 4.1.1.4 Audio Visual Infrastructure and Audio-Visual Systems Design	Architect
~~§ 4.1.1.4 Measured drawings~~	
§ 4.1.1.5 Structured Cabling Infrastructure and Structured Cabling System Design	Architect
~~§ 4.1.1.5 Existing facilities surveys~~	
§ 4.1.1.6 Security and Safety Systems Design	Architect
~~§ 4.1.1.6 Site evaluation and planning~~	
§ 4.1.1.7 Signage and Wayfinding and Environmental Graphics	Architect
~~§ 4.1.1.7 Building Information Model management responsibilities~~	
§ 4.1.1.8 Professional Renderings (3 Views)	Architect
~~§ 4.1.1.8 Development of Building Information Models for post construction use~~	
§ 4.1.1.9 Lighting Design (specialty lighting)	Architect
~~§ 4.1.1.9 Civil engineering~~	
~~§ 4.1.1.10 Landscape design~~	
~~§ 4.1.1.11 Architectural interior design~~	
~~§ 4.1.1.12 Value analysis~~	
~~§ 4.1.1.13 Cost estimating~~	
~~§ 4.1.1.14 On-site project representation~~	
~~§ 4.1.1.15 Conformed documents for construction~~	
~~§ 4.1.1.16 As-designed record drawings~~	
~~§ 4.1.1.17 As-constructed record drawings~~	
~~§ 4.1.1.18 Post-occupancy evaluation~~	
~~§ 4.1.1.19 Facility support services~~	
~~§ 4.1.1.20 Tenant-related services~~	
~~§ 4.1.1.21 Architect's coordination of the Owner's consultants~~	
~~§ 4.1.1.22 Telecommunications/data design~~	
~~§ 4.1.1.23 Security evaluation and planning~~	
~~§ 4.1.1.24 Commissioning~~	
~~§ 4.1.1.25 Sustainable Project Services pursuant to Section 4.1.3~~	
~~§ 4.1.1.26 Historic preservation~~	
~~§ 4.1.1.27 Furniture, furnishings, and equipment design~~	
~~§ 4.1.1.28 Other services provided by specialty Consultants~~	
~~§ 4.1.1.29 Other Supplemental Services~~	

See Attached Fee Proposal

Additions and Deletions Report for AIA Document B133™ – 2019. Copyright © 2014, and 2019 by The American Institute of Architects. All rights reserved. The "American Institute of Architects," "AIA," the AIA Logo, and "AIA Contract Documents" are registered trademarks and may not be used without permission. This document was produced by AIA software at 09:18:54 ET on 02/11/2022 under Order No.2998476739 which expires on 09/25/2022, is not for resale, is licensed for one-time use only, and may only be used in accordance with the AIA Contract Documents® Terms of Service. To report copyright violations, e-mail copyright@aia.org.
User Notes:

PAGE 14

.1 ~~(—)~~ Three (3) reviews of each Shop Drawing, Product Data item, sample and similar submittals of the Construction Manager

.2 ~~(—)~~ Twenty-Eight (28) visits to the site by the Architect during construction

.3 ~~(—)~~ Three (3) inspections for any portion of the Work to determine whether such portion of the Work is substantially complete in accordance with the requirements of the Contract Documents

.4 ~~(—)~~ Four (4) inspections for any portion of the Work to determine final completion

PAGE 15

§ 4.2.5 If the services covered by this Agreement have not been completed within ~~(—)~~ Thirteen (13) months of the date of this Agreement, through no fault of the Architect, extension of the Architect's services beyond that time shall be compensated as Additional Services.

§ 4.2.6 During the schematic phase, design development phase, construction documents phase, bidding or negotiation phase or construction phase work, and any other design work or documents provided by Architect as described in Section 3 above, should the Owner request revisions to the design work or documents prepared for that phase which were previously approved, these revisions will be made subject to adjustment to the Architect's compensation where Architect can demonstrate that the work previously completed was authorized, done at the Owner's direction, or where the Construction Manager and Architect have agreed upon a budget in advance, using the Program parameters. Further, the Architect shall be entitled to additional compensation to the extent Owner requests revisions based on a requested change in the aesthetic character of the design previously approved or where a budget has already been established, and the cost of labor, materials, and/or equipment increases through no fault of Architect, requiring redesign to meet the Owner's budget. Before performing these services, Architect must receive prior written approval from the Owner and Owner must agree to the estimated costs associated with said services.

...

§ 5.3.1 The Owner acknowledges that accelerated, phased or fast-track scheduling provides a benefit, but also carries with it associated risks. Such risks include the Owner incurring costs for the Architect to coordinate and redesign portions of the Project affected by procuring or installing elements of the Project prior to the completion of all relevant Construction Documents, and costs for the Construction Manager to remove and replace previously installed Work. If the Owner selects accelerated, phased or fast-track scheduling, the Owner agrees to include in the budget for the Project sufficient contingencies to cover such ~~costs.~~ costs, including payment to Architect as Additional Services.

PAGE 16

§ 5.13 The Owner shall ~~include the Architect in all~~ contemporaneously provide the Architect with any communications with the Construction Manager that relate to or affect the Architect's services or professional responsibilities. The Owner shall promptly notify the Architect of the substance of any direct communications between the Owner and the Construction Manager otherwise relating to the Project. Communications by and with the Architect's consultants shall be through the Architect.

...

§ 5.16 Within 15 days after receipt of a written request from the Architect, the Owner shall furnish the requested information as ~~necessary and relevant for the Architect to evaluate, give notice of, or enforce lien rights.~~ necessary.

PAGE 18

§ 7.4 Except for the licenses granted in this Article 7, no other license or right shall be deemed granted or implied under this Agreement. The Owner shall not assign, delegate, sublicense, pledge or otherwise transfer any license granted herein to another party without the prior written agreement of the Architect. Any unauthorized use of the Instruments of Service shall be at the Owner's sole risk and without liability to the Architect and the Architect's consultants. Further, Owner shall be responsible to compensate Architect for said unauthorized use of the Instruments of Service.

~~**§ 7.5** Except as otherwise stated in Section 7.3, the provisions of this Article 7 shall survive the termination of this Agreement.~~

Additions and Deletions Report for AIA Document B133™ – 2019. Copyright © 2014, and 2019 by The American Institute of Architects. All rights reserved. The "American Institute of Architects," "AIA," the AIA Logo, and "AIA Contract Documents" are registered trademarks and may not be used without permission. This document was produced by AIA software at 09:18:54 ET on 02/11/2022 under Order No.2998476739 which expires on 09/25/2022, is not for resale, is licensed for one-time use only, and may only be used in accordance with the AIA Contract Documents® Terms of Service. To report copyright violations, e-mail copyright@aia.org.
User Notes:

...

§ 8.1.1 The Owner and Architect shall commence all claims and causes of action against the other and arising out of or related to this Agreement, whether in contract, tort, or otherwise, in accordance with the requirements of the binding dispute resolution method selected in this Agreement and within the period specified by applicable law, but in any case not more than ~~10~~ six (6) years after the date of Substantial Completion of the Work. The Owner and Architect waive all claims and causes of action not commenced in accordance with this Section 8.1.1.

...

§ 8.1.3 The Architect shall indemnify and hold the Owner and the Owner's officers and employees harmless from and against damages, losses and judgments arising from claims by third parties, including reasonable attorneys' fees and expenses recoverable under applicable law, but only to the extent they are caused by the negligent acts or omissions of the Architect, its employees and its consultants in the performance of professional services under this Agreement. The Architect's obligation to indemnify and hold the Owner and the Owner's officers and employees harmless does not include a duty to defend. ~~The Architect's duty to indemnify the Owner under this Section 8.1.3 shall be limited to the available proceeds of the insurance coverage required by this Agreement.~~

~~**§ 8.1.4** The Architect and Owner waive consequential damages for claims, disputes, or other matters in question arising out of or relating to this Agreement. This mutual waiver is applicable, without limitation, to all consequential damages due to either party's termination of this Agreement, except as specifically provided in Section 9.7.~~

...

§ 8.2.2 The Owner and Architect shall endeavor to resolve claims, disputes and other matters in question between them by mediation, which, unless the parties mutually agree otherwise, shall be administered by ~~the American Arbitration Association in accordance with its~~ a mutually agreed upon mediator in accordance with the American Arbitration Association's ("AAA") Construction Industry Mediation Procedures in effect on the date of this Agreement. A request for mediation shall be made in writing, delivered to the other party to this Agreement, and filed with the person or entity administering the mediation. The request may be made concurrently with the filing of a complaint or other appropriate demand for binding dispute resolution but, in such event, mediation shall proceed in advance of binding dispute resolution proceedings, which shall be stayed pending mediation for a period of 60 days from the date of filing, unless stayed for a longer period by agreement of the parties or court order. If an arbitration proceeding is stayed pursuant to this section, the parties may nonetheless proceed to the selection of the arbitrator(s) and agree upon a schedule for later proceedings.

PAGE 19

[X] Litigation in a court of competent jurisdiction

...

~~**§ 8.3 Arbitration**~~

~~**§ 8.3.1** If the parties have selected arbitration as the method for binding dispute resolution in this Agreement, any claim, dispute or other matter in question arising out of or related to this Agreement subject to, but not resolved by, mediation shall be subject to arbitration, which, unless the parties mutually agree otherwise, shall be administered by the American Arbitration Association in accordance with its Construction Industry Arbitration Rules in effect on the date of this Agreement. A demand for arbitration shall be made in writing, delivered to the other party to this Agreement, and filed with the person or entity administering the arbitration.~~

~~**§ 8.3.1.1** A demand for arbitration shall be made no earlier than concurrently with the filing of a request for mediation, but in no event shall it be made after the date when the institution of legal or equitable proceedings based on the claim, dispute or other matter in question would be barred by the applicable statute of limitations. For statute of limitations~~

Additions and Deletions Report for AIA Document B133™ – 2019. Copyright © 2014, and 2019 by The American Institute of Architects. All rights reserved. The "American Institute of Architects," "AIA," the AIA Logo, and "AIA Contract Documents" are registered trademarks and may not be used without permission. This document was produced by AIA software at 09:18:54 ET on 02/11/2022 under Order No.2998476739 which expires on 09/25/2022, is not for resale, is licensed for one-time use only, and may only be used in accordance with the AIA Contract Documents® Terms of Service. To report copyright violations, e-mail copyright@aia.org.
User Notes: (1664241209)

~~purposes, receipt of a written demand for arbitration by the person or entity administering the arbitration shall constitute the institution of legal or equitable proceedings based on the claim, dispute or other matter in question.~~

~~**§ 8.3.2** The foregoing agreement to arbitrate, and other agreements to arbitrate with an additional person or entity duly consented to by parties to this Agreement, shall be specifically enforceable in accordance with applicable law in any court having jurisdiction thereof.~~

~~**§ 8.3.3** The award rendered by the arbitrator(s) shall be final, and judgment may be entered upon it in accordance with applicable law in any court having jurisdiction thereof.~~

...

§ 9.1 If the Owner fails to make payments to the Architect in accordance with this Agreement, such failure shall be considered substantial nonperformance and cause for termination or, at the Architect's option, cause for suspension of performance of services under this Agreement. If the Architect elects to suspend services, the Architect shall give seven days' written notice to the Owner before suspending services. In the event of a suspension of ~~services,~~ services arising through no fault of the Architect, the Architect shall have no liability to the Owner for delay or damage caused by the Owner because of such suspension of services. Before resuming services, the Owner shall pay the Architect all sums due prior to suspension and any expenses incurred in the interruption and resumption of the Architect's services. The Architect's fees for the remaining services and the time schedules shall be equitably adjusted.

PAGE 20

§ 9.5 The Owner may terminate this Agreement upon not less than seven days' written notice to the Architect for the Owner's convenience ~~and without cause.~~in the event the Owner looses its funding for the Project.

§ 9.6 If the Owner terminates this Agreement for its convenience pursuant to Section 9.5, or the Architect terminates this Agreement pursuant to ~~Section~~ Sections 9.1 or 9.3, the Owner shall compensate the Architect for services performed prior to Architect's receipt of the notice of termination, and Reimbursable Expenses ~~incurred,~~ incurred and costs attributable to termination, including the costs attributable to the Architect's termination of consultant agreements.

...

~~**§ 9.8** Except as otherwise expressly provided herein, this Agreement shall terminate one year from the date of Substantial Completion.~~

§ 9.9 The Owner's rights to use the Architect's Instruments of Service in the event of a termination of this Agreement are set forth in Article ~~7 and Section 9.7.~~7.

...

§ 10.1 This Agreement shall be governed ~~by the law of the place where the Project is located, excluding that jurisdiction's choice of law rules. If the parties have selected arbitration as the method of binding dispute resolution, the Federal Arbitration Act shall govern Section 8.3.~~and construed in accordance with the laws of the State of North Carolina. Any action or proceeding arising under this agreement shall be filed and heard in the Superior Court of Lee County.

PAGE 21

§ 10.8 If the Architect or Owner receives information specifically designated as "confidential" or "business proprietary," the receiving party shall keep such information strictly confidential and shall not disclose it to any other person except as set forth in Section ~~10.8.1. This Section 10.8 shall survive the termination of this Agreement.~~10.8.1, unless the documents must be disclosed pursuant to North Carolina's public record laws.

...

Additions and Deletions Report for AIA Document B133™ – 2019. Copyright © 2014, and 2019 by The American Institute of Architects. All rights reserved. The "American Institute of Architects," "AIA," the AIA Logo, and "AIA Contract Documents" are registered trademarks and may not be used without permission. This document was produced by AIA software at 09:18:54 ET on 02/11/2022 under Order No.2998476739 which expires on 09/25/2022, is not for resale, is licensed for one-time use only, and may only be used in accordance with the AIA Contract Documents® Terms of Service. To report copyright violations, e-mail copyright@aia.org.
User Notes: (1664241209)

ONE MILLION THREE HUNDRED EIGHTY-SEVEN THOUSAND FIVE HUNDRED DOLLARS ($1,387,500)

PAGE 22

Supplemental Services	**Cost**
§ 4.1.1.1 Programming, Planning	$25,000
§ 4.1.1.2 Community Outreach	$8,000
§ 4.1.1.3 Furniture Specifications, Procurement and Installation Oversight	$62,500
§ 4.1.1.4 Audio Visual Infrastructure and Audio Visual Systems Design	$38,000
§ 4.1.1.5 Structured Cabling Infrastructure and Structured Cabling System Design	$18,000
§ 4.1.1.6 Security and Safety Systems Design	$26,000
§ 4.1.1.7 Signage and Wayfinding and Environmental Graphics	$25,000
§ 4.1.1.8 Professional Renderings (3 Views)	$20,000
§ 4.1.1.9 Lighting Design (specialty lighting)	$70,000

...

Schematic Design Phase	$161,250	percent (	15	%)
Design Development Phase	$215,000	percent (	20	%)
Construction Documents Phase	$322,500	percent (	30	%)
Procurement/ Bid Phase	$53,750	percent (	5	%)
Construction Phase	$268,750	percent (	30	%)

PAGE 23

Employee or Category	**Rate ~~($0.00)~~**
Victor Vines	$290
Robert Thomas	$215
Jeff Schroeder	$150
Dave Hardin	$150

...

Expenses include actual expenditures made by Architect and/or its consultants on the Project including travel, meals, and overnight expenses in connection with the project, reproductions, photocopying, photography, handling of drawings, and other documents. The reimbursable expenses should not exceed Twenty Thousand Dollars ($20,000).

...

§ 11.10.1.1 An initial payment of ~~($)~~ Zero Dollars ($ 0.00) shall be made upon execution of this Agreement and is the minimum payment under this Agreement. It shall be credited to the Owner's account in the final invoice.

PAGE 25

Victor Vines, AIA

Additions and Deletions Report for AIA Document B133™ – 2019. Copyright © 2014, and 2019 by The American Institute of Architects. All rights reserved. The "American Institute of Architects," "AIA," the AIA Logo, and "AIA Contract Documents" are registered trademarks and may not be used without permission. This document was produced by AIA software at 09:18:54 ET on 02/11/2022 under Order No.2998476739 which expires on 09/25/2022, is not for resale, is licensed for one-time use only, and may only be used in accordance with the AIA Contract Documents® Terms of Service. To report copyright violations, e-mail copyright@aia.org.
User Notes: (1664241209)

Certification of Document's Authenticity

AIA® Document D401™ – 2003

I, , hereby certify, to the best of my knowledge, information and belief, that I created the attached final document simultaneously with its associated Additions and Deletions Report and this certification at 09:18:54 ET on 02/11/2022 under Order No. 2998476739 from AIA Contract Documents software and that in preparing the attached final document I made no changes to the original text of AIA® Document B133™ – 2019, Standard Form of Agreement Between Owner and Architect, Construction Manager as Constructor Edition, as published by the AIA in its software, other than those additions and deletions shown in the associated Additions and Deletions Report.

(Signed)

PRESIDENT

(Title)

FEBRUARY 11, 2022

(Dated)

AIA Document D401™ – 2003. Copyright © 1992 and 2003 by The American Institute of Architects. All rights reserved. The "American Institute of Architects," "AIA," the AIA Logo, and "AIA Contract Documents" are registered trademarks and may not be used without permission. This document was produced by AIA software at 09:18:54 ET on 02/11/2022 under Order No.2998476739 which expires on 09/25/2022, is not for resale, is licensed for one-time use only, and may only be used in accordance with the AIA Contract Documents® Terms of Service. To report copyright violations, e-mail copyright@aia.org.
User Notes: (1664241209)

Additional Assurances Vines Architect

1. Pursuant to North Carolina General Statute § 143-133.3, E-verify Compliance, the County may not enter into a contract unless the contractor, and the contractor's subcontractors under the contract, comply with the requirements of Article 2 of Chapter 64 of the General Statutes. The Contractor represents and warrants that it is in compliance with the requirements of Article 2 of Chapter 64 of the General Statutes. Further, the Provider warrants that any subcontractors used by the Provider will be in compliance with the requirements of Article 2 of Chapter 64 of the General Statutes.
2. The Provider certifies that: (i) the Provider is not listed on the Final Divestment List created by the State Treasurer pursuant to N.C.G.S. § 147-86.58 (the "Final Divestment List"). The Final Divestment List can be found on the State Treasurer's website at the address https://www.nctreasurer.com/office-state-treasurer/divestment-and-do-not-contract-rules. Any contract in violation of this Act is void.
3. This Provider certifies that the Provider is not identified as an entity by the North Carolina Secretary of State that is engaged in a boycott of the State of Israel pursuant to N.C.G.S., Article 6G, Chapter 147. The Final Divestment List can be found on the State Treasurer's website at https://www.nctreasurer.com/office-state-treasurer/divestment-and-do-not-contract-rules. Any contract in violation of this Act is void.

Victor Vines

Vines Architect

2021-52

FILED
LEE COUNTY NC
PAMELA G. BRITT
REGISTER OF DEEDS

FILED	Jan 05, 2022
AT	12:09:12 pm
BOOK	00003
START PAGE	0791
END PAGE	0791
INSTRUMENT #	00108
EXCISE TAX	(None)

RESOLUTION SELECTING THE CONSTRUCTION MANAGEMENT AT RISK DELIVERY METHOD FOR THE LEE COUNTY LIBRARY

WHEREAS, Lee County Board of Commissioners has approved the construction of a new Library to replace the existing Lee County Library located at 107 Hawkins Avenue, Sanford, NC 27330; and

WHEREAS, Lee County has compared the advantages and disadvantages of using the Construction Management at Risk method for this project in lieu of the delivery methods identified in N.C.G.S. 143-128(a1)(1) through N.C.G.S. 143-128(a1)(3); and

WHEREAS, Construction Management at Risk provides an opportunity for involvement of the contractor during the design process for the purpose of providing the architect with feedback on constructability, real-time cost implications, scheduling, and other design issues; and

WHEREAS, Construction Management at Risk requires the Construction Manager to use prequalified subcontractors; and,

WHEREAS, Construction Management at Risk allows for transparency of the overall bidding and construction process, including the costs incurred by the Construction Manager; and

WHEREAS, Lee County has concluded the Construction Management at Risk method is in the overall best interest of this project compared to the other delivery methods available in N.C.G.S. 143-128(a1)(1)-(3).

NOW THEREFORE, BE IT RESOLVED, that the Lee County Board of Commissioners selects the project above for the Construction Management at Risk construction delivery method in accordance with N.C.G.S. 143-128.1.

Adopted this 15th day of November, 2021.

Kirk D. Smith, Chair
Lee County Board of Commissioners

ATTEST:

November 10, 2021

Mr. Santiago Giraldo, MPA
Development Services Director
Lee County Government
408 Summit Drive
Sanford, NC 27331-1968

Re: Proposal for Architecture/Engineering Design Services
Lee County Library
Standard Design Contract Phase
Revision 1

Dear Mr. Giraldo:

Vines Architecture is pleased to submit our revised proposal to provide architectural and engineering design services for the new Lee County Library located in Sanford, North Carolina. The scope of work in this proposal is based on the results, findings and conclusions presented in the Lee County Library Request for Qualifications #: 4841-01-21 dated May 14, 2021, and discussions that occurred at the October 21, 2021, pre-proposal meeting and a proposal review meeting with Lee County Development Services. The Scope of Services (Basic & Supplemental) is outlined in Section D and Supplemental Services described in detail in Exhibit A of this proposal.

We look forward to the opportunity to work with you on this unique and exciting project. This proposal includes the following:

A. Project Understanding
B. Proposed Project Budget
C. Proposed Schedule
D. Scope of Services
E. Compensation Structure
F. Proposed Team
G. Clarifications, Assumptions & Exclusions

A. Project Understanding:

Vines Architecture will serve as the Design Architect of Record for this project to provide professional programming/planning, design, and construction administration services for the Lee County Library. The new library is expected to be designed as a 30,000 SF new building. The final building size will be concluded at the completion of the Programming Phase but may need to be reduced to approximately 27,000 GSF depending on final bids. This Proposal is based on our understanding of the project as described in the "Request for Qualifications #: 4841-01-21: May 14, 2021", subsequent information received from Lee County Facilities, Design and Construction and the pre-proposal scoping meeting held October 21, 2021. The Scope of Services (Basic and Supplemental Services) is outlined in Section C. We have been informed by Lee County that the terms of our Prime Agreement will be based on the AIA Standard for of Agreement Between Owner and Architect. The new Library will be delivered through a Construction Management-at-Risk (CMAR) delivery method. Lee County has not yet contracted with the CMAR for this project.

B. Proposed Project Size and Budget:

Given the current construction market and building materials industry, the project size (SF), project budget, estimated construction cost and cost per square foot are components that must be aligned and balanced as the project design is developed. These components should be considered malleable and such, adjustable as the program, project size and budgets are developed, aligned, and reconciled. This proposal assumes these sizes and costs relative to the project budget as a starting point to develop this proposal but should not be taken as final and definitive until the end of the schematic design phase of the project. It is never good practice to fix all three project components; Budget, Size(sf), Cost(quality) until sufficient design and estimating can be completed.

Project Size Range	27,000 – 30,000 SF
Total Project Budget	$14,000,000
Total Estimated Construction Budget (To Be Confirmed at Programming Phase) *(Incl. Cost of Building Construction, Fixed Equipment, CM Contingency, General Requirements, Insurance/Bonds, General Conditions & CM Fee + Escalation)*	$10,200,000

Recommended Equipment Allowances/Budgets	
- Furniture / Furnishings / Equipment	$625,000
- Audio Visual Systems & Structured Cabling Systems	$400,000
- Building Security Systems	$145,000
Owner Construction Contingency & Reserve	$840,000
Owner Allowances, Design Fees and Expenses	$1,790,000

C. Proposed Schedule

Below is a summary of the proposed schedule for the project. It is anticipated that each design phase will occur consecutively. The review and approval periods for regulatory agencies are allotted as required. The schedule assumes an official start date and Notice to Proceed January 3, 2022.

AE Proposal Preparation and Negotiations	September 27 – December 31, 2021
Programming & Planning	January 3 – January 28, 2022
Programming & Planning Report Submittal Complete	January 28, 2022
Schematic Design Phase Complete	April 26, 2022
Design Development Phase Complete	September 1, 2022
Construction Documents Phase Complete	February 28, 2023
Estimated Approved & Out for Bid	March 1, 2023
GMP Recommendation to Award	May 1, 2023
Notice To Proceed (Construction)	May 15, 2023
Estimated Construction Period (12 months)	May 17, 2023 – June 17, 2024
Owner Acceptance of Building	June 19, 2024
FFE Installation	June 20 – July 31, 2024
Owner Move-in Period	August 1 – August 31, 2024

D. Scope of Services

Below are the Architectural, Engineering and Consultant Design services to be provided under this proposal:

- **Basic Services**
  - Architectural Design
  - Structural Design
  - Mechanical/HVAC Building Design
  - On-Site Mechanical Site Utility Design
  - Electrical Building Design
  - Electrical Site Utility Design
  - Fire Alarm Design
  - Plumbing Design
  - Civil Design
  - Building Proximity Landscape & Site Lighting Design
  - Cost Estimating & Scheduling
  - Sustainability, Energy Efficient Buildings

- **Supplemental Services (Refer to Attachment "A" for Scope of Work Descriptions)**
  - Programming | Planning
  - Community Outreach
  - Furniture Specification, Procurement & Installation Oversight
  - Audio Visual Infrastructure & Audio-Visual Systems Design
  - Structured Cabling Infrastructure & Structured Cabling Systems Design
  - Security & Safety Systems Design
  - Signage & Wayfinding & Environmental Graphics

- Professional Renderings (3 Views)
- Lighting Design (Specialty Lighting)

E. Compensation Structure (Lump Sum Fee & Reimbursable Expenses for Professional Services)

The basis and supplemental service fees are outlined below:

Basic Services	
AE Basic Services	**$1,075,000**
Supplemental Services & Fees	
Programming | Planning	**$25,000**
Community Outreach	**$8,000**
Furniture Specification, Procurement & Installation Oversight	**$62,500**
Audio Visual Systems Design	**$38,000**
Structured Cabling Systems Design	**$18,000**
Security & Safety Systems Design	**$26,000**
Signage, Wayfinding & Environmental Graphics	**$25,000**
Professional Renderings (3 Views)	**$20,000**
Lighting Design (Specialty Lighting)	**$70,000**
Total Lump Sum Fee (Basic + Supplemental Services)	**$1,367,500**

Reimbursable Expenses

Direct reimbursable expenses will be invoiced separately, above and beyond the stipulated lump sum fee. Reimbursable expenses include actual expenditures made by our firm and our consultants on the project including travel, meals, and overnight expenses in connection with the project, reproductions, photocopying, photography, handling of drawings, and other documents. The reimbursable expenses should not exceed **TWENTY THOUSAND DOLLARS ($20,000.00).**

The total including the lump sum fee and reimbursable expenses is ONE MILLION THREE HUNDRED EIGHTY-SEVEN THOUSAND FIVE HUNDRED DOLLARS ($1,387,500).

Invoices will be sent monthly and are due within thirty days of receipt.

F. Proposed Team

Architect of Record **Vines Architecture** 819 West Hargett Street Raleigh, NC 27603 919-755-1975	
Consultant Team	
Dewberry, MEP & Civil Engineering 2610 Wycliff Road, Suite 410 Raleigh, NC 27607 919-425-7631	**NV5, AV/Information Technology** 4905 Professional Court Raleigh, NC 27609 919.876.9799
Lynch Mykins, Structural Engineering 415 Hillsborough St., Suite 101 Raleigh, NC 27603 919.782.1833	**Glimmer & Glow, Lighting Consultant** 4711 Hope Valley Road, Suite 4F-611 Durham, NC 27707 919.425.8945
Surface 678, Landscape Architect 215 Morris Street, Suite 150 Durham, NC 27701 919-419-1669	**Cumming, Cost Estimating** 302 East Pettigrew Street, Suite 130 Durham, NC 27701

G. Clarifications, Assumptions & Exclusions

- It is assumed there will only be one (1) construction phase for this project.
- The project will be delivered through the Construction Manager at Risk construction process.
- The project will be documented in BIM (Building Information Modeling) software.
- This proposal does not include or allow for any "fast track" packaging as a design/build delivery method.
- A Board of County Commissioners Chamber design and documentation has been mentioned could become part of the project at some point. It is not included in this proposal. If this space is to be included in the library design, additional services will be required.
- Site topographic survey services will be solicited and administered by the owner. Topographic and planimetric mapping accuracy will be suitable for design purposes. Cost will be the responsibility of the owner. Owner will be invoiced for work directly by surveyor.
- A boundary survey (signed and sealed by North Carolina PLS) of the proposed site will be solicited and administered by the owner for use in developing site plans. Cost will be the responsibility of the owner.
- A geotechnical subsurface investigation report (signed and sealed) for the proposed site will be solicited and administered by the designer on behalf of the owner. The Designer will assist in the administration of the report on the Owner's behalf. Cost will be the responsibility of the owner. Owner will be invoiced for work directly by the geotechnical engineer.
- Inspections required for Special Inspections, outside of those performed weekly under this contract, are not included in this fee proposal. Our structural engineer of record can perform these under a separate contract or make recommendations to the Owner. Designer will review all special inspection documents as part of basic services.
- No rezoning or special use permits are included in this proposal.
- No environmental assessment or audits will be provided by the designer. Any environmental work required for the development of the project will be the responsibility of the Owner.
- No wetlands delineations, surveying or permitting is included in this proposal.
- It is assumed no endangered or threatened species are present on the site that would affect the development of the project.
- No traffic control analysis or planning is included in this proposal for the development of the project.
- This project will <u>not</u> pursue LEED certification.
- This proposal assumes there will be a single FF&E package documented and procured. Additional service fees may be required only if the designer must administer and manage multiple FFE procurement bid packages.
- The installation and cost for the AV and Structured Cabling infrastructure (raceway) will be a part of the construction budget. Supplemental fees for AV and Structured Cabling are for the design and documentation of systems and devices that have been designated as separate budgets.
- Landscape design shall be provided in accordance with Lee County requirements.

Exclusions

- Board of County Commissioner Chambers Design
- Multiple Bid Packages
- Fast Track Design
- Post Occupancy Evaluation
- Multiple Preliminary Designs After SD Approval
- Enhanced Operational & Building Commissioning
- Hazardous Material Design and Abatement Assessment
- Sound and/or Paging System
- Sound Masking System
- Public Safety Distribution Antenna System (DAS)
- Design Basis Threat Assessment
- Off-site Grading
- Environmental Assessment and Findings of No Significant Impact
- Environmental Noise Assessment and Façade Isolation
- Construction Administration for more than 1 Phase
- Design and Documentation for Major Road and Drive Relocation
- Digital Graphic Content Development
- Individual Digital Screen Graphics Content and User Interface Designs
- Acquisition of New Photography or Securing of License Rights for Existing Photography
- Off-site Mechanical System Distribution Design
- Planning and design of any structured parking decks or facilities
- Design Services for Temporary Library Upfits or Renovations
- Commissioning and Artist / Artwork Piece Coordination
- Library Collections Cataloging and Layout
- Library Visits and Benchmarking Tours
- Destination Branding
- Network Electronics
- LEED Design, Certification & Associated Fees
- Professional Model
- Fund Raising Materials, Design & Production
- AV Control System Software Development / Asset Management Portal
- AV System Tuning / Optimization / Commissioning
- AR/VR/XR Production and Playback Systems
- Predictive Heat Map (to optimize wireless network design)
- IT/Telecom Outside Plant
- Voice/Data System Electronics Design
- Building-Wide Li-Fi Systems / Building PoE Lighting
- Acoustical Design (To Be Added if Required)

We believe this proposal responds to the project requirements and the owner's request to design the best library for Lee County. Vines Architecture appreciates the opportunity to work with Lee County and we look forward to a successful project.

Sincerely,

VINES ARCHITECTURE, INC.

Victor Vines, AIA LEED AP
President

Cc: File

EXHIBIT 'A'

A/E Supplemental Services Description

Below are the detailed descriptions of services included under Supplemental Services:

Programming | Planning

Vines Architecture will facilitate a series of necessary work sessions to create, review and confirm the building program, programmatic adjacencies, blocking and stacking recommendations, facility detail space program and site recommendations with the current library and its administration. Given that no Programming and Planning document has been created for the library overall programming will be part of the services.

1. Rough Order of Magnitude (ROM) Initial Building Program Development

   a) Conduct a kickoff meeting with the University's "Steering Committee" and the "Working Group" to establish and convey the project goals and objectives, space standards, and our approach to space programming.

   b) Develop a written building program overview for the Business School (includes interior and exterior program areas). The overview program will determine the appropriate size for each department and a comparison to the existing spaces.

   c) Conduct a ROM program review meeting with the University's "Steering Committee" to reconcile program and budget.

   d) Develop space program that includes individual room square footages, primary adjacencies, and special requirements (MEP, equipment, structural loading, etc.).

2. Facility Detail Building Program

   a) Building and Spatial Requirements: Generate single line layouts of primary usable spaces indicated on the space list. Generic layouts of the major study, instructional, meeting, and special event spaces will be developed to establish capacities, general function, NSF, and the basic understanding of architectural features and requirements.

   b) Develop comprehensive space list of all spaces required in the New School of Business including MEP equipment room requirements.

   c) Develop adjacency matrices and diagrams/isolation of activities.

Community Outreach

Vines Architecture will lead a maximum of four (4) presentations to the community for the purposes of gathering information and input and sharing the design intent of the project. The presentations dates will be coordinated with the library leadership, county engineering, and project schedule to ensure that leaders from all agencies are available. Feedback will be received during each of these meetings and discussed with the library leadership to determine which comments need to be considered further or integrated into future planning and design decisions.

Furniture Specification, Procurement & Installation Oversight

Furniture Specifications scope of services includes selection and development of furniture, and accessories for the building to coordinate with interior architecture and design. The selection includes furnishings for all areas identified in the Program. The estimated FFE procurement budget is $650,000, which is not part of the construction budget. A computer-generated furniture, and accessories plan will be developed in conjunction with the architectural floor plans and keyed to the specifications. All furnishings will be cataloged into a detailed Furniture Specifications Package for use in bidding and/or procurement of the items. The designer will act as the owner's representative in conjunction with the purchasing department in securing the selected items including delivery, installation, and final inspection. Furniture Design Services also include the development of digital presentations and physical samples for review of selected furniture; art and accessory items to coordinate with the interior finish boards. Scope of work includes:

- Select furniture and accessories in coordination with interior architecture.
- Develop and document lighting to coordinate with interior architecture beyond basic design and in conjunction with electrical engineer.
- Develop furniture and accessories floor plans to coordinate architectural floor plans.
- Develop furniture and accessories specifications for bidding/procurement.
- Coordinate showroom visits and/or samples for review

- Assemble digital presentation of furniture and accessories along with finish boards.
- Coordinate bidding and procurement of furniture and accessories including delivery, installation, and final inspection.
- Provide construction administration services to oversee furniture installation including delivery, sign off, punch list/damage reports and pay application verification

Audio Visual Systems

The design team will provide design services within the confines of the building and outdoor site areas for the Audio/Visual system. This supplemental service does not include infrastructure design such as conduit size, junction box size and configuration because it is covered under the basic services portion of this contract. This AV equipment budget is not included in the total construction budget but is covered under separate Equipment Budget. Audiovisual Systems, including audio, video, display, conferencing, collaboration, presentation, control, and related systems such as Digital Signage and television distribution.

Infrastructure Design (Schematic Design, Design Development, Construction Documents)

1. Meet with the Owner and Architect to ascertain the functional, aesthetic, sustainability, and budgetary requirements of the Audiovisual Systems.
2. Conduct a Technology Visioning and Virtual Benchmarking workshop. In Technology Visioning, present the emerging technologies in audio, video, displays, collaboration, computing, telecommunications, personal communications, and others that may impact the future uses of the library. In Virtual Benchmarking, show dozens of photos, sketches, and floor plans from various institutions with similar program elements and facilitate a discussion about what attributes of the various spaces are desired (and not desired) for your project. *Note*: This is an excellent tool for gathering program information, allowing the Owner to give specific direction to the entire Design Team, since the technology systems have such a large impact on the design of many factors about the space.
3. Conduct user interviews, both on-site and remotely, and tour the existing facility as needed to complete the discovery process.
4. Submit a preliminary Audiovisual Program with narrative descriptions of the relevant spaces and systems, a discussion of relevant technology trends and an Opinion of Probable Cost for the installed systems. The report is intended to be used as a decision-making tool for planning and budgeting purposes. The costs expressed are estimates per space or system type for the equipment and labor necessary to achieve the planned functionality; the document does not identify specific component-level costs, manufacturers, makes or model numbers. The report will be submitted in PDF format intended to be used as a stand-alone document or as an attachment to other project documentation prepared by the Architect.
5. Meet with the Owner to review the Audiovisual Program.
6. Submit a final Audiovisual Program based on information provided at the meeting. The final document, upon acceptance by the Owner, will be used as a guideline for planning and design efforts as the project progresses.
7. Assist the Architect in the development of sightlines, room geometries, floor plans, seating plans, projection spaces, equipment locations, adjacencies, and ceiling heights to enable optimal use of the audiovisual systems.
8. Generate and submit Equipment Plan drawings for the Audiovisual Systems, illustrating recommended locations for projection screens, projectors, displays, cameras, loudspeakers, lecterns, equipment racks, technical furniture, and other architecturally significant items as needed.
9. Review the Equipment Plan drawings with the Owner and Architect via telephone or web conference. Submit updated equipment plan drawings for approval by the Owner.
10. Submit for coordination with appropriate members of the Design Team, recommendations and estimated requirements for the following elements *as related to the audiovisual systems:* AC power, HVAC, vibration, and structural needs, lighting performance, dimming, dimming control, window treatments, projection glazing, equipment security, telecommunications, interior finishes, specialty furnishings and Intelligent Building Systems. Our input for these elements as related to audiovisual systems will be recommendations, not final designs, or specifications.
11. Submit, for coordination with the furniture specifier, a package of cut sheets illustrating technology items that impact furniture selection. If needed, specify technology-related furniture such as lecterns and operator consoles; review and comment on technology-related furniture specified by others.
12. Contribute to the Revit model, for inclusion into the Construction Documents package, model elements and detailed drawings illustrating infrastructure required to support the Audiovisual Program. The drawing set will be comprised of floor plans, ceiling plans, select elevations, riser diagrams and associated details as needed. Illustrated will be elements typically provided by the General Contractor and/or Electrical Contractor, such as cable pathways, conduit destinations and sizes, back boxes, floor boxes, power locations, equipment locations, blocking, backing, projection screens, architectural integration details and other information as needed to convey the design intent.
13. Submit to the Owner, for inclusion into the Project Specifications for the base building bid, CSI format specifications for facilities-related audiovisual components. These specifications will include items that are typically provided by the General Contractor and/or Electrical Contractor such as projection screens, projector lifts, and specialty floor/wall boxes as needed.

Note: this phase does *not* include specification of complete audiovisual systems; the audiovisual systems bidding documents should be prepared as a separate late bid package, released during construction.

Systems Design and Bidding (Planned as a late bid package, for release during construction)

1. Update the Opinion of Probable Cost for the installed audiovisual systems at 100% Design Development and 100% Construction Documents.
2. Meet with the Owner to review and reconfirm the Audiovisual Program and budget. This meeting is expected to be well after construction of the building has begun.
3. Once the Owner has approved the Audiovisual Systems budget, submit to the Architect and Owner, for release to specialty audiovisual contractors, competitive bidding documents for the audiovisual systems. The documents will include:
    - General bidding terms and conditions as needed
    - Narrative system descriptions
    - Functional block diagrams showing major audiovisual components indicating signal flow and equipment interconnectivity
    - Connection points to related systems such as data networks, lighting dimming systems, window treatment controllers, Mass Notification Systems and Security Systems as needed.
    - Control software descriptions
    - Detailed equipment lists with specific manufacturers, makes, and models numbers for all the major components necessary for the successful implementation of the systems design
    - Specification detailing the technical performance, installation, warranty coverage, training, documentation, and project close-out procedures. *Note:* All information will be of sufficient detail as to allow the Owner or Architect to solicit competitive bids. Duplication, advertising, distribution, receipt, award, and other administrative tasks related to the bid packages are provided by others.
4. Meet with the Owner to review the audiovisual systems design documentation.
5. Generate one set of updates to the audiovisual systems design documentation, based on Owner feedback. Submit final bid specification package, to be released either as a stand-alone package or as an attachment to procurement administration documents, such as CSI Division 00 / 01 or a standard Terms & Conditions document, prepared by the Architect, Owner, or others.
6. Participate in one on-site pre-bid meeting with prospective bidders.
7. Provide answers to technical questions from bidders during the bidding process.
8. Review bid responses for compliance to design and specification.
9. Conduct a bid review via telephone or web conference with up to three of the bidders.
10. Submit bid analysis and bid award recommendation.

Construction Administration

1. Respond to relevant RFIs, Shop Drawings and other project submittals for compliance with design documentation, as related to our design scope and responsibilities.
2. Observe and report on the General Contractor's and Electrical Contractor's work-in-progress, on-site, as related to our design scope and responsibilities.
3. Meet with the Audiovisual Contractor and Owner to review Shop Drawings submitted by the Audiovisual Contractor. Review functional capabilities and characteristics of the system for compliance with Owner requirements.
4. Observe and report on the Audiovisual Contractor's work-in-progress, on-site, as related to our design scope and responsibilities.
5. Observe and report on the completed audiovisual systems and final documentation. Submit Punch List Report detailing results.
6. Complete record drawings and project close-out documentation as required by the North Carolina State Construction Office.

IT/Structured Cabling Systems Design

Structured Cabling Systems, including intra-building cabling, and telecom rooms to support voice, data, and television services. Our scope of work includes all relevant spaces and systems in the facility.

Infrastructure Design, Systems Design and Bidding (SD / DD / CD)

1. Meet with the Owner to ascertain the functional, aesthetic, sustainability, and budgetary requirements of the Structured Cabling Systems. If needed, tour the existing facility to complete the discovery process.
2. Submit a preliminary Structured Cabling Systems Program with narrative descriptions of the relevant spaces and systems, a discussion of relevant technology trends and an Opinion of Probable Cost for the installed systems. The report is intended to be used as a decision-making tool for planning and budgeting purposes. The costs expressed are estimates for the equipment and labor necessary to achieve the planned functionality; the document does not identify specific component-level costs, manufacturers, makes or model numbers. The report will be submitted in PDF format intended to be used as a stand-alone document or as an attachment to other project documentation prepared by the Architect.
3. Meet with the Owner to review the Structured Cabling Systems Program.
4. Submit a final Structured Cabling Systems Program based on information provided at the meeting. The final document, upon acceptance by the Owner, will be used as a guideline for planning and design efforts as the project progresses.
5. Development of Telecommunication Room quantities, sizes and locations based on building size, room layout, equipment layout, anticipated levels of connectivity and future expansion plans.
6. Work with design team for coordination with appropriate members of the Design Team, recommendations, and estimated requirements for the design of the Telecommunications Rooms, including the building's Entrance Facility. Guidelines will include lighting and electrical recommendations; floor, wall, and ceiling finishes; and criteria regarding cooling and humidity. Our input for these elements as related to structured cabling systems will be recommendations, not final designs, or specifications.
7. Coordinate connectivity requirements with the Owner and Design Team, including all copper, fiber, and wireless. Include network connectivity needs for specialty systems such as audiovisual, security, food service, point of sale systems, building automation and Intelligent Building Systems as needed.
8. Contribute to the Revit model, for inclusion into the Construction Documents package, model elements and detail drawings illustrating the Structured Cabling System design. The drawing set will be comprised of floor plans, ceiling plans, telecommunication room enlarged plans, building riser diagrams, equipment rack elevations, select elevations and associated details as needed. Illustrated will be outlet locations and types, faceplates, conduit and junction box types, floor boxes, horizontal cabling requirements per outlet type, cable tray layouts and sizes, vertical pathways and backbone cabling, cable pathways, conduit destinations and sizes, power locations, architectural integration details and other information as needed to convey the design intent.
9. Coordinate with design team for inclusion into the Project Specifications for the base building bid, CSI format specifications for Structured Cabling Systems. Specifications are anticipated to include backbone cabling, horizontal cabling, outlets, racks and cable management, hangers and supports, raceways, grounding and bonding, identification methods, installation requirements, training, warranty, testing, and certification. *Note:* We anticipate the Structured Cabling Systems bidding documents will be included with the base building bid. All information will be of sufficient detail as to allow the Owner or Architect to solicit competitive bids. Duplication, advertising, distribution, receipt, award, and other administrative tasks related to the bid packages are provided by others.
10. Provide answers to technical questions from bidders during the bidding process.
11. Review bid responses for compliance to design and specification.

Construction Administration

1. Respond to relevant RFIs, Shop Drawings and other project submittals for compliance with design documentation, as related to our design scope and responsibilities.
2. Observe and report on the General Contractor's and Electrical Contractor's work-in-progress, on-site, as related to our design scope and responsibilities.
3. Observe and report on the Structured Cabling Contractor's work-in-progress, on-site, as related to our design scope and responsibilities.
4. Observe and report on the completed structured cabling systems and final documentation. Submit Punch List Report detailing results.
5. Complete record drawings and project close-out documentation as required by the Lee County Design and Facilities Construction Office.

Security and Safety Systems Design

Building Security Systems, including access control, intrusion detection, outdoor emergency phones and surveillance systems, applying the principles of Crime Prevention Through Environmental Design. Our scope of work includes all relevant spaces and systems in the facility and the immediate exterior of the building.

Infrastructure Design, Systems Design and Bidding (SD / DD / CD)

1. Review existing documentation submitted by the Owner describing current systems, standards, preferences, and future plans.
2. Meet with the Owner and Architect to ascertain the functional, aesthetic, sustainability, and budgetary requirements of the building security. Review the principles of CPTED or Crime Prevention Through Environmental Design. Tour existing facility as needed to complete the discovery process.
3. Submit a preliminary Building Security Program with optional security mitigation measures to consider and an Opinion of Probable Cost for the installed electronic security systems. Non-electronic elements will be presented as options to consider but not included in the Opinion of Probable Cost. The report is intended to be used as a decision-making tool for planning and budgeting purposes. The costs expressed are estimates for the equipment and labor necessary to achieve the planned functionality; the document does not identify specific component-level costs, manufacturers, makes or model numbers. The report will be submitted in PDF format intended to be used as a stand-alone document or as an attachment to other project documentation prepared by the Architect.
4. Submit a third-party report illustrating personal and property crime statistics for the specific street address of the project site. This includes an analysis of the surrounding neighborhood areas, in a 3-mile or 6-mile radius. Submit an additional third-party benchmarking report showing an overview of the crime risk for other similar facilities nationally, allowing comparison to this project site. Submit comments related to both reports.
5. Meet with the Owner and Architect to review the Building Security Systems Program.
6. Submit a final Building Security Program based on information provided at the meeting. The final document, upon acceptance by the Owner, will be used as a guideline for planning and design efforts as the project progresses.
7. Review and comment on the architectural plans with respect to principles of CPTED or Crime Prevention Through Environmental Design.
8. Generate and submit Equipment Plan drawings for the Building Security Systems, illustrating recommended locations for surveillance cameras, card access, intrusion detection, emergency telephone (often referred to as “Blue Phones”) and recording and monitoring equipment locations as needed.
9. Review the Equipment Plan drawings with the Owner and Architect via telephone of web conference. Submit revised equipment plan drawings for approval by the Owner.
10. Submit to the Architect, for coordination with appropriate members of the Design Team, recommendations and estimated requirements for the following elements *as related to the Building Security:* AC power, vibration and structural needs, lighting performance, telecommunications, interior finishes, cooling, humidity, furnishings, and Intelligent Building Systems. Our input for these elements as related to building security will be recommendations, not final designs, or specifications.
11. Review the Door Hardware Schedule, created by others, at 90% Construction Documents. Submit report summarizing electronic access control coordination items.
12. Submit to the Architect, or contribute to the Revit model, for inclusion into the Construction Documents package, model elements and detail drawings illustrating the Building Security Systems design. The drawing set will be comprised of floor plans, site plans (if needed), security monitoring room enlarged plans, riser diagrams, equipment rack elevations, select elevations, and associated details as needed. Illustrated will be equipment locations, camera mounting and housing types, panel details, access door types, emergency phone locations, conduit and junction box types, cable pathways, conduit destinations and sizes, power locations, architectural integration details and other information as needed to convey the design intent.
13. Submit to the Architect, for inclusion into the Project Specifications for the base building bid, CSI format specifications for Building Security Systems. Specifications are anticipated to include access control systems, surveillance systems, intrusion detection, emergency phones, racks and cable management, installation requirements, training, warranty, testing, and certification. *Note:* We anticipate the Building Security Systems bidding documents will be included with the base building bid. All information will be of sufficient detail as to allow the Owner or Architect to solicit competitive bids. Duplication, advertising, distribution, receipt, award, and other administrative tasks related to the bid packages are provided by others.
14. Provide answers to technical questions from bidders during the bidding process.
15. Review bid responses for compliance to design and specification.

Construction Administration

1. Respond to relevant RFIs, Shop Drawings and other project submittals for compliance with design documentation, as related to our design scope and responsibilities.
2. Observe and report on the General Contractor's and Electrical Contractor's work-in-progress, on-site, as related to our design scope and responsibilities.
3. Observe and report on the Building Security Contractor's work-in-progress, on-site, as related to our design scope and responsibilities.
4. Observe and report on the completed building security systems and final documentation. Submit Punch List Report detailing results.
5. Complete record drawings and project close-out documentation as required by the North Carolina State Construction Office.

Signage, Wayfinding and Environmental Graphics

The design team will provide design services for the development of a signage and wayfinding program and environmental graphics for the Lee County Main Library. Below is an outline of the project requirements for signage and communication from Programming through the Project Close-out phases.

- Signage consisting of room identification, regulatory, and exterior identification, and wayfinding consisting of exterior pedestrian approach signage, directories and place mapping, wayfinding to guide users to their destinations, and a visual system that is universally legible and/or intuitively learned and consistent throughout the building.

- Environmental graphics for the enhancement of the building experience through large scale visual means. Solutions may include permanent and semi-permanent graphic "wallpaper," and custom graphic wall artwork.

The design team will work closely with the owner and support their effort to deliver a new engaging visitor experience to the library. The visual design language developed for the project will be consistent throughout, visually engaging, and establish a new experiential identity for the library. The design of the signage and environmental graphics will build upon best-practices in similar needs while ensuring a unique solution for the Lee County, NC location.

Professional Renderings

The design team will develop three (3) architectural renderings for the project to present the building's proposed exterior and interior experience. The exterior views will be developed at the end of the design development phase and the beginning of the construction document phase. The final images will be presented in electronic and hard copy format.

Lighting Consultant (Specialty Lighting)

General:

In coordination with design team, provide specialty interior and exterior lighting recommendations, layouts, and specifications for approximately 27,000 – 30,000 s.f. Recommendations will be for integration into architectural and engineering documents by others.

Scope of Work:

Schematic Design:

- Design and program meetings with Client and/or Developer and/or End User(s)
- Develop lighting equipment budget and narratives
- Massing and model studies for daylight availability and macro level daylight strategies and feasibility

Design Development:

- Develop lighting scheme based on approved program for further client review
- Design meetings and teleconferencing with design team
- Preliminary lighting layouts (including type annotations) in electronic format based on agreed upon scheme
- Preliminary photometric calculations as required to ensure compliance with IESNA recommendations.
- Preliminary luminaire selection and catalog pages
- Revisions to layouts, luminaire selection and control intent based on budget, Client review and architectural development (limited to two during Design Development)
- Cost estimate for lighting equipment items

Construction Documents:

- Coordination meetings and teleconferencing with design team
- Revisions to layouts and luminaire selection based on budget, Client review and architectural development
- Sketches of specialty mounting details and modified luminaires
- Recommended Architectural Lighting Specifications in electronic format including luminaire schedule with multi-name and/or performance specification for all equipment in scope as required
- Review and redline of architectural drawings to ensure proper lighting coordination
- Update cost estimate for lighting equipment

Construction Administration:

- Responses to requests for information
- Submittal review for specified lighting equipment (detailed review of substitute packages may be provided as an additional service)
- Site visits for final punch list and to supervise focusing at substantial completion

END OF PROPOSAL

ITEM #: V.A

LEE COUNTY AGENDA ABSTRACT
BOARD OF COMMISSIONERS - REGULAR

MEETING DATE: February 21, 2022

SUBJECT:

Project 4836-01-20 Lee County Courthouse and Government Center COR 09 and COR 10 Approval Request

DEPARTMENT: Administration

CONTACT PERSON: Santiago Giraldo,

TYPE: Action Item

REQUEST	Request approval of proposed of change order 09 and 10 totaling $185,183 for project 4836-01-21 Lee County Courthouse and Govt. Center.
BUDGET IMPACT	There are unencumbered funds in the capital projects to cover the change order.
ATTACHMENTS	CO-09 Signed by GC_220204.pdf CO-10 Signed by GC_220204.pdf
PRIOR BOARD ACTION	Board of Commissioners have approved this project and its subsequent Change Orders

RECOMMENDATION	Lee County Development Services is requesting approval of COR 09 ($55,793) and COR 10 ($129,390) in order to address necessary changes and priority projects identified in support of our current renovation of the Main Courthouse and Government Center (Project 4836-01-20) in the amount of $185,183 (See summary for additional details.)

SUMMARY

COR 09 Main Courthouse $55,793 PCO 063 Additional Demolition $1,427.00 PCO 067R Fire Alarm addition to Jury Room $11,473 PCO 074R LCSO Narcotics Division Security Changes $25,247 (Priority Project) PCO 076 Courthouse Lobby 2nd floor carpet $17,646 (Priority Project) COR 10 LCGC $129,390 PCO 036 Transaction windows Tax office $5,140 PCO 047 Sliding door additions to new furniture Tax $450 PCO 061 Hallway and office Painting Phase 1 and 2 $7,570 PCO 064 Air Distribution Changes Phase 1 and 2 $1,447 PCO 069 Additional plaster demo for pipe re-routing $18,150 PCO 071 Emergency Stop Switches for 3 boilers $1,768 PCO 072R Change power to 3 phase circuits 1st floor mech room $1,091 PCO 075 Additional smoke seal phase 3 $467 PCO 77R Flooring LVP installation in 2 and 3rd floor $92,289 (Priority Project) Total for COR 09 and 10 $185,183

MOSELEYARCHITECTS

Change Order

Lee County Courts and Government Center

Change Order Number: 09

Project # 592385

To Contractor:

Bar Construction Company, Inc.
611-A Industrial Ave
Greensboro, NC 27406

Change Order Date: 02/02/2022
Contract Date: 06/15/2020

The Contract is hereby revised by the following items:

PCO	Description	Days	Amount
063	CH - Demo and moving of furniture	0	$1,427.00
067R	CH - Fire Alarm Cost	0	$11,473.00
074R	CH- Additional Work for Demo of Sheriff's Office Partition	0	$25,247.00
076	CH - 2nd Floor Lobby Flooring	0	$17,646.00
	Total for this Change Order:	**0 Days**	**$55,793.00**

The original Contract Sum was	$5,494,000.00
Sum of changes by prior Change Orders	$245,585.00
The Contract Sum prior to this Change Order was	$5,739,585.00
The Contract Sum will be changed by this Change Order in the amount of	$55,793.00
The new Contract Sum including this Change Order will be	**$5,795,378.00**
The Contract duration will be changed by	0 Days
The revised Substantial Completion date as of this Change Order is	5/10/2022

ARCHITECT	CONTRACTOR	OWNER
Moseley Architects	Bar Construction Company, Inc.	Lee County, NC
6210 Ardrey Kell Road Charlotte, NC 28277	611-A Industrial Ave Greensboro, NC 27406	408 Summit Drive Sanford, NC 27331
SIGNATURE	SIGNATURE	SIGNATURE
DATE 2/2/2022	DATE 2/4/22	DATE

Printed on: 2/2/2022

BAR CONSTRUCTION COMPANY, INC. ESTABLISHED 1976

611-A INDUSTRIAL AVE. · GREENSBORO, NC 27406 · (336) 274-2477 · FAX (336) 274-8694

January 7, 2022

Mr. Santiago Giraldo
Lee County, North Carolina
408 Summit Drive
Sanford, NC 27331

Project: Lee County Courts and Government Center

COR #: 063 - Demo and moving of furniture in main courthouse

Gentlemen:

In accordance with the proposed change order request, we have reviewed the cost involved and request a change order of **$1,427.00.**

This proposal is based on work being performed during regular work hours, 8:00 am to 4:30 pm Monday through Friday. No overtime work has been included.

Acceptance of this change order request will add zero (0) days to the contract time.

This change order proposal is firm for thirty days from this date, after which time it is subject to adjustment.

Sincerely,

Vice President

Architect Signature

Owner Signature

Project: Lee County Courts and Government Center

Date: 12/07/2021
Job: 01-20-046
COR#: 063
No. of Days

Description:
Demo and moving of furniture in main courthouse

Cost Code	Description	Quantity	Unit	Unit Price Mtl	Unit Price Lbr	Material	Labor	Subcontract	Total
						-	-		-
09-650	**Right Touch Interiors**					-	-	1,332.00	1,332.00
						-		-	-
						-	-		-
						-	-		-
						-	-		-
						-	-		-
						-	-		-
						-	-		-
						-	-		-
						-	-		-
						-	-		-
						-	-		-
						-	-		-
						-	-		-
						-	-		-
						-	-		-
						-	-		-
						-	-		-
						-	-		-
						-	-		-
						-	-		-
						-	-		-
						-	-		-
						-	-		-
									-
									-
									-
	General Conditions:								-
	Truck/Tools		day	95		-			-
	Mobile Phone		day	5		-			-
	Chemical Toilet		day	5		-			-
	Dumpster		pull	450		-			-
	Supervision		mnhrs	65			-		-
	Office Trailer		day	10		-			-
	Power		day	15		-			-
	Water		day	5		-			-
	Project Management		Hour	95		-			-
						-			-
						-			-
						-	-	1,332.00	1,332.00
	Sales tax			6.75%		-			-
	Payroll taxes			40.0%			-		-
						-	-	1,332.00	1,332.00

Summary		
Material		-
Labor		-
Subcontract		1,332.00
		1,332.00
Overhead & Profit - Material & Labor	10.0%	-
Overhead & Profit - Subcontractors	5.0%	66.60
		1,398.60
Safety Fees	0.04%	-
AGC Fees	0.08%	1.00
Payment & Performance Bonds	1.96%	27.41
Net Change Order Request		$ 1,427.00

BAR CONSTRUCTION COMPANY, INC. ESTABLISHED 1976

611-A INDUSTRIAL AVE. · GREENSBORO, NC 27406 · (336) 274-2477 · FAX (336) 274-8694

January 20, 2022

Mr. Santiago Giraldo
Lee County, North Carolina
408 Summit Drive
Sanford, NC 27331

Project: Lee County Courts and Government Center

COR #: 067.01 - Fire Alarm additional cost

Gentlemen:

In accordance with the proposed change order request, we have reviewed the cost involved and request a change order of **$11,473.00.**

This proposal is based on work being performed during regular work hours, 8:00 am to 4:30 pm Monday through Friday. No overtime work has been included.

Acceptance of this change order request will add zero (0) days to the contract time.

This change order proposal is firm for thirty days from this date, after which time it is subject to adjustment.

Sincerely,

Vice President

Architect Signature

Owner Signature

Project: Lee County Courts and Government Center

Description: Fire Alarm addtional cost

Date: 01/20/2022
Job: 01-20-046
COR#: 067.01
No. of Days

Cost Code	Description	Quantity	Unit	Unit Price Mtl	Unit Price Lbr	Material	Labor	Subcontract	Total
						-	-		-
	Modern Electrical					-	-	10,708.00	10,708.00
						-		-	-
						-	-		-
						-	-		-
						-	-

Modern Electrical

1/20/2022

Lee County Courts Approved Change Orders Detailed Cost

1. Fire Alarm Additional Cost-Courthouse (COR# 067) breakdown:
On east side: 2 additional horn/strobes, 1 strobe, 3 smoke detectors.
On west side: 2 horn/strobes, 1 strobe, two smoke detectors, replacement of 3 existing horn/strobes and rewire to connect to new Mac synch circuit.
Additional power supply panel at west side.
One FCP-24-S8 power supply with batteries, (22)FSP-851IV intelligent photo with base.
3 P2RL Horn/strobes, (9) P2CRL horn/strobes, 6 SRL strobes.....$4,197.20
Programing & Testing.....$975.00
Redrawing zone map.....$550.00
Labor cost.....$3,915.00
Overhead & profit 10%.....$1,070.80
Total Fire Alarm Additional Cost.....$10,708.00

2. Change power to 3 phase circuit at 1st. floor mechanical room (COR#072)
3 Pole breaker, 3/4 raceways, fittings, boxes, supports, wire-nuts.....$455.00
Labor cost.....$400.00
Overhead & Profit 10%.....$ 95.00
Total Change Order Cost.....$950.00

E-Stop switches for 3 boilers (COR#071)
Materials by City Electric.....$680.00
Material from Modern Electrical warehouse.....$355.00
Labor Cost.....$450.00
Overhead & Profit 10%.....$165.00
Total Change Order Cost.....$1,650.00

Combined Approved Changes Total.....$13,308.00

BAR CONSTRUCTION COMPANY, INC. ESTABLISHED 1976

611-A INDUSTRIAL AVE. · GREENSBORO, NC 27406 · (336) 274-2477 · FAX (336) 274-8694

January 27, 2022

Mr. Santiago Giraldo
Lee County, North Carolina
408 Summit Drive
Sanford, NC 27331

Project: Lee County Courts and Government Center

COR #: 074.01 - Additional work for demolition of Sheriff's Office partitions and acoustical ceilings

Gentlemen:

In accordance with the proposed change order request, we have reviewed the cost involved and request a change order of **$25,247.00.**

This proposal is based on work being performed during regular work hours, 8:00 am to 4:30 pm Monday through Friday. No overtime work has been included.

Acceptance of this change order request will add zero (0) days to the contract time.

This change order proposal is firm for thirty days from this date, after which time it is subject to adjustment.

Sincerely,

Vice President

Architect Signature

Owner Signature

Project: Lee County Courts and Government Center

Date: 01/27/2022
Job: 01-20-046
COR#: 074.01
No. of Days

Description:
Additional work for demolition of partitions and acoustical ceilings

Cost Code	Description	Quantity	Unit	Unit Price Mtl	Unit Price Lbr	Material	Labor	Subcontract	Total
						-	-		-
09-500	MITTS					-	-	5,451.00	5,451.00
						-		-	-
	Door					1,800.00	-		1,800.00
	Paint					3,500.00	-		3,500.00
09-650	Carpet					-	-	4,978.39	4,978.39
						-	-		-
16-100	Electrical					-	-	2,500.00	2,500.00
						-	-		-
						-	-		-
						-	-		-
						-	-		-
						-	-		-
						-	-		-
						-	-		-
						-	-		-
						-	-		-
						-	-		-
						-	-		-
						-	-		-
						-	-		-
						-	-		-
						-	-		-
									-
									-
									-
	General Conditions:								-
	Truck/Tools	5	day	95		475.00			475.00
	Mobile Phone	5	day	5		25.00			25.00
	Chemical Toilet		day	5		-			-
	Dumpster		pull	450		-			-
	Supervision	40	mnhrs	65			2,600.00		2,600.00
	Office Trailer		day	10		-			-
	Power		day	15		-			-
	Water		day	5		-			-
	Project Management	3	Hour	95		285.00			285.00
						-			-
						-			-
						6,085.00	2,600.00	12,929.39	21,614.39
	Sales tax			7.00%		426.00			426.00
	Payroll taxes			40.0%			1,040.00		1,040.00
						6,511.00	3,640.00	12,929.39	23,080.39

Summary		
Material		6,511.00
Labor		3,640.00
Subcontract		12,929.39
		23,080.39
Overhead & Profit - Material & Labor	10.0%	1,015.00
Overhead & Profit - Subcontractors	5.0%	646.47
		24,741.86
Safety Fees	0.04%	-
AGC Fees	0.08%	19.79
Payment & Performance Bonds	1.96%	484.94
Net Change Order Request		$ 25,247.00

ADDITIONAL WORK AUTHORIZATION

MTTS, LLC

P. O. Box 201
Liberty, NC 27298
Phone 336-622-2388, Fax 336-622-2380
North Carolina Certified WBE

OWNER'S NAME: Bar Construction	PHONE:	DATE:01-20-2022
STREET:	JOB NAME: **Lee County Government Center**	JOB #:
CITY:	STATE:	STREET:
EXISTING CONTRACT NUMBER:	DATE OF EXSITING CONTRACT:	CITY:
STATE:		

You are authorized to perform the following specifically described additional work:

Change Request #5

1. Additional work consisting of demolition of partitions and acoustical ceilings. Infill existing door's that are being removed. Build new partition across hallway and install new door. Patch where wall paper is being removed. **Total $5,451.00 ((Labor rate figured at $35.00 per hour) 115 total man hours at $35.00 per hour Labor Total $4,025.00) (Material $931.00) (O/P $495.00)**

ADDITIONAL CHARGE FOR WORK ABOVE IS **Total $5,451.00**

Payment will be made as follows: _____

The above additional work is to be performed under same conditions as specified in original contract unless otherwise stipulated.

Date _____
(owner signs here)

We hereby agree to furnish labor and materials – complete in accordance with the above specifications, at above stated price.

Authorized Signature _____ Date 11-20-20

THIS IS CHANGE ORDER NO. _____

Right Touch Interiors

CELEBRATING 25 YEARS OF EXCELLENCE

807 Post St.
Greensboro, NC 27405
Phone 336-378-0033
www.righttouchinteriors.com

Request for Change Order

Attention:	GREG TILLMAN
Customer PO:	01-20-046
Date:	12/3/2021
Project #:	80658
Request #:	11 *CO #:* 0
Manager:	GREG GORDON

51154

Ship To	LEE COUNTY BUILDINGS 1400 S. HORNER BLVD SEE DIRECTIONS FOR BUILDING SANFORD, NC 27330	*Bill To*	BAR CONSTRUCTION COMPANY, INC. 611-A INDUSTRIAL AVENUE GREENSBORO, NC 27406
Contacts	RICK LEONARD Phone: 336 274-24 Cell: (336) 908-7717- Pager: Fax: 336 274-86	*Contacts*	
	Phone: Cell: Pager: Fax:		

Description of Change Order Request:

SHERIFF/NARCOTICS DIVISION ADD LVP

SHERIFF/NARCOTICS DIVISION ADD LVP

ADD

Line #	*Manufacturer:* / *Style:*	*Color Name:* / *Color Number:*
1	**MC=VT-A2 - VIYNL TILE SUPPLIED AND INSTALLED - ** 20 MIL PRODUCT PRICING ** **	
	SHAW HARDSURFACES	TIMBER
	TERRAIN II 0454V 6"X48" 20 MIL	00572
2	**MC=FLOOR PREP - PREP FLOOR FOR VINYL PLANKS**	
	RIGHT TOUCH INTERIORS, LLC.	N/A
	FLOOR PREP	N/A
3	**MC=RB RUBBER BASE SUPPLIED AND INSTALLED -**	
	JOHNSONITE®	GRAY *
	WALL BASE (CB-XX)-VINYL-ROLL 4" GROUP 3	48
4	**DEMO OF EXISTING - DEMO EXISTING CARPET TILE**	
	RIGHT TOUCH INTERIORS, LLC.	EXISTING
	DEMO	

Total ADD **$4,978.39**

Total This Option - Tax Included : $4,978.39

SALESMAN'S SIGNATURE _____

CUSTOMER'S AUTHORIZATION _____

BAR CONSTRUCTION COMPANY, INC. ESTABLISHED 1976

611-A INDUSTRIAL AVE. · GREENSBORO, NC 27406 · (336) 274-2477 · FAX (336) 274-8694

January 26, 2022

Mr. Santiago Giraldo
Lee County, North Carolina
408 Summit Drive
Sanford, NC 27331

Project: Lee County Courts and Government Center

COR #: 076 – Lobby Flooring

Gentlemen:

In accordance with the proposed change order request, we have reviewed the cost involved and request a change order of **$17,646.00.**

This proposal is based on work being performed during regular work hours, 8:00 am to 4:30 pm Monday through Friday. No overtime work has been included.

Acceptance of this change order request will add zero (0) day to the contract time.

This change order proposal is firm for thirty days from this date, after which time it is subject to adjustment.

Sincerely,

Vice President

Architect Signature

Owner Signature

Project: Lee County Courts and Government Center

Description: Smoke seal additional openings phase 3

Date: 01/24/2022
Job: 01-20-046
COR#: 076
No. of Days

Cost Code	Description	Quantity	Unit	Unit Price Mtl	Unit Price Lbr	Material	Labor	Subcontract	Total
						-	-		-
	Right Touch Interiors					-	-	11,565.05	11,565.05
						-		-	-
						-	-		-
						-	-		-
						-	-

Right Touch Interiors

CELEBRATING 25 YEARS OF EXCELLENCE

807 Post St.
Greensboro, NC 27405
Phone 336-378-0033
www.righttouchinteriors.com

Request for Change Order

Attention:	GREG TILLMAN
Customer PO:	01-20-046
Date:	10/26/2021
Project #:	80658
Request #:	9 *CO #:* 0
Manager:	GREG GORDON

51154

Ship To	LEE COUNTY BUILDINGS 1400 S. HORNER BLVD SEE DIRECTIONS FOR BUILDING SANFORD, NC 27330	*Bill To*	BAR CONSTRUCTION COMPANY, INC. 611-A INDUSTRIAL AVENUE GREENSBORO, NC 27406
Contacts	RICK LEONARD Phone: 336 274-24 Cell: (336) 908-7717- Pager: Fax: 336 274-86	*Contacts*	
	Phone: Cell: Pager: Fax:		

Description of Change Order Request:

ADD LOBBY

ADD LOBBY

ADD

Line #	*Manufacturer:* / *Style:*	*Color Name:* / *Color Number:*
1	**MC=CTILE-A CARPET SUPPLIED AND INSTALLED -**	
	MANNINGTON COMMERCIAL® CARPETS	ELECTRONIC
	RPM 12"X48"	
2	**MC=RB RUBBER BASE SUPPLIED AND INSTALLED -**	
	JOHNSONITE®	GRAY *
	WALL BASE (CB-XX)-VINYL-ROLL 4" GROUP 3	48
3	**MC=FLOOR PREP -**	
	RIGHT TOUCH INTERIORS, LLC.	N/A
	FLOOR PREP	N/A
4	**MC DEMO -**	
	RIGHT TOUCH INTERIORS, LLC.	CARPET TILES
	DEMO	

Total ADD **$11,565.05**

Total This Option - Tax Included : $11,565.05

SALESMAN'S SIGNATURE _____

CUSTOMER'S AUTHORIZATION _____

MOSELEYARCHITECTS

Change Order

Lee County Courts and Government Center

Change Order Number: 10

Project # 592385

To Contractor:

Bar Construction Company, Inc.
611-A Industrial Ave
Greensboro, NC 27406

Change Order Date: 02/02/2022
Contract Date: 06/15/2020

The Contract is hereby revised by the following items:

PCO	Description	Days	Amount
036	GC - Add transaction window at 3rd floor tax office	0	$5,140.00
047	GC - Add 6 sliding doors to the open cubbies	0	$450.00
061	GC - Painting Phase 1 & 2	0	$7,570.00
064	GC - Air distribution changes for phase 1 and 2 due to ceiling types change	0	$1,447.00
069	GC - Plaster demo for pipe re-routing	0	$18,150.00
071	E-stop switches for 3 boilers	0	$1,768.00
072R	Change power to 3 phase circuits at 1st floor mechanical room	0	$1,018.00
073	Labor portion of the rework of the duct conflicts on the 2nd floor	0	$1,091.00
075	Smoke seal additional openings phase 3	0	$467.00
077R	GC - Install LVP	0	$92,289.00
	Total for this Change Order:	**0 Days**	**$129,390.00**

The original Contract Sum was	$5,494,000.00
Sum of changes by prior Change Orders	$301,378.00
The Contract Sum prior to this Change Order was	$5,795,378.00
The Contract Sum will be changed by this Change Order in the amount of	$129,390.00
The new Contract Sum including this Change Order will be	**$5,924,768.00**
The Contract duration will be changed by	0 Days
The revised Substantial Completion date as of this Change Order is	5/10/2022

ARCHITECT	CONTRACTOR	OWNER
Moseley Architects	Bar Construction Company, Inc.	Lee County, NC
6210 Ardrey Kell Road Charlotte, NC 28277	611-A Industrial Ave Greensboro, NC 27406	408 Summit Drive Sanford, NC 27331
SIGNATURE	SIGNATURE	SIGNATURE
DATE 2/2/2022	DATE 2/4/22	DATE

BAR CONSTRUCTION COMPANY, INC. Established 1976

611-A Industrial Ave. · Greensboro, NC 27406 · (336) 274-2477 · Fax (336) 274-8694

May 26, 2021

Mr. Santiago Giraldo
Lee County, North Carolina
408 Summit Drive
Sanford, NC 27331

Project: Lee County Courts and Government Center

COR #: 036 - Add transaction window at 3rd floor tax office.

Gentlemen:

In accordance with the proposed change order request, we have reviewed the cost involved and request a change order of **$5,140.00.**

This proposal is based on work being performed during regular work hours, 8:00 am to 4:30 pm Monday through Friday. No overtime work has been included.

Acceptance of this change order request will add two (2) days to the contract time.

This change order proposal is firm for thirty days from this date, after which time it is subject to adjustment.

Sincerely,

Vice President

Architect Signature

Owner Signature

Project: Lee County Courts and Government Center

Description: Add transaction window at 3rd floor tax office

Date: 05/26/2021
Job: 20-046
COR#: 036

Description	Quantity	Unit	Unit Price Mtl	Unit Price Lbr	Material	Labor	Subcontract	Total
					-	-		-
Carolina Classic Window & Glass					-	-	4,797.29	4,797.29
					-			-
					-	-	-	-
					-	-		-
					-	-		-
					-	-		-
					-	-		-
					-	-		-
					-	-		-
					-	-		-
					-	-		-
					-	-		-
					-	-		-
					-	-		-
					-	-		-
					-	-		-
					-	-		-
					-	-		-
					-	-		-
					-	-		-
					-	-		-
					-	-		-
								-
								-
								-
General Conditions:								-
Truck/Tools		day	85		-			-
Mobile Phone		day	5		-			-
Chemical Toilet		day	5		-			-
Dumpster		pull	375		-			-
Supervision		mnhrs	35			-		-
Office Trailer		day	5		-			-
Power					-			-
Water					-			-
					-			-
					-			-
					-			-
					-	-	4,797.29	4,797.29
Sales tax			7.00%		-			-
Payroll taxes			40.0%			-		-
					-	-	4,797.29	4,797.29

Summary		
Material		-
Labor		-
Subcontract		4,797.29
		4,797.29
Overhead & Profit - Material & Labor	15.0%	-
Overhead & Profit - Subcontractors	5.0%	240.00
		5,037.29
Safety Fees	0.04%	-
AGC Fees	0.08%	4.00
Payment & Performance Bonds	1.96%	99.00
Net Change Order Request		$ 5,140.00

CAROLINA CLASSIC
WINDOW & GLASS 611-C INDUSTRIAL AVE GREENSBORO NC 27406 (336) 553-2852 FAX
(336) 553-2853

May 20, 2021

Bar Construction Company, Inc.
611-A Industrial Avenue
Greensboro, NC 27406
Attn: Greg Tillman

Project: Lee County Courthouse
COR #: 005 – Tax Office Partitions

Gentlemen:

In accordance with the proposed change order request, we have reviewed the cost involved and request a change order of **$4797.29.**

This proposal includes 70sf of ¼" Clear Tempered glazing with 1¾" x 4½" Clear Anodized storefront framing (no sills; head and jambs only). Three (3) speak hole covers and (3) 10½" x 5¼" semicircular ticket windows (with covers) are included. Dividers between workstations to be mounted with 2 sides of u-channel (back side of main frame and countertop) and wet glazed with 3/8" Clear Tempered and polished edges.

Deduct value to remove the workstation dividers is **$(549.10)**.

Acceptance of this change order request will add zero (2) days to the contract time.

This change order proposal is firm for thirty days from this date, after which time it is subject to adjustment.

Sincerely,

Jon Webster
Project Manager

ls

enclosures

Project: Lee County Courthouse

Date: 05/20/2021
Job: 20-734
COR#: 005

Description: ADD Transaction windows at 3rd floor Tax Office (Non-Ballistic rated)

Description	Quantity	Unit	Unit Price		Material	Labor	Subcontract	Total
			Mtl	Lbr				
08-508 Field Measure for fabrication	4	manhr		35.00	-	140.00		140.00
					-	-	-	-
08-400 Stock length Clear Anodized	1	ea	1165.65		1,165.65	-		1,165.65
framing for 1/4" glass					-	-		-
					-	-		-
08-710 Speak hole covers 5"	3	ea	28.91		86.73	-		86.73
					-	-		-
08-710 Semicircular Ticket Window	3	ea	158.02		474.06	-		474.06
w/ Cover 10.5" x 5.25"					-	-		-
					-	-		-
08-801 1/4" Clear Tempered	71	sqft	6.25		443.75	-		443.75
					-	-		-
08-401 Fabricate framing	8	manhr		35.00	-	280.00		280.00
					-	-		-
08-400 Install Framing on countertop	16	manhr		35.00	-	560.00		560.00
					-	-		-
08-801 Glass divider btwn stations	10	sqft	14.25		142.50	-		142.50
3/8" Clear Tempered					-	-		-
					-	-		-
08-400 U-channel for dividers	2	ea	60.30		120.60	-		120.60
					-	-		-
08-400 Install glass dividers	4	manhr		35.00	-	140.00		140.00
								-
								-
								-
General Conditions:								-
Truck/Tools		day	85		-			-
Mobile Phone		day	5		-			-
Chemical Toilet		day	5		-			-
Dumpster		pull	375		-			-
Supervision		mnhrs	30			-		-
Office Trailer		day	5		-			-
Power					-			-
Water					-			-
Per Diem		day			-			-
Hotel		day			-			-
					-			-
					2,433.29	1,120.00	-	3,553.29
Sales tax			7.00%		170.00			170.00
Payroll taxes			40.0%			448.00		448.00
					2,603.29	1,568.00	-	4,171.29

Summary		
Material		2,603.29
Labor		1,568.00
Subcontract		-
		4,171.29
Overhead & Profit - Material & Labor	15.0%	626.00
Overhead & Profit - Subcontractors	10.0%	-
		4,797.29
Safety Fees	0.00%	
AGC Fees		-
Payment & Performance Bonds		
Net Change Order Request		$ 4,797.29

BAR CONSTRUCTION COMPANY, INC. ESTABLISHED 1976
611-A INDUSTRIAL AVE. · GREENSBORO, NC 27406 · (336) 274-2477 · FAX (336) 274-8694

August 4, 2021

Mr. Santiago Giraldo
Lee County, North Carolina
408 Summit Drive
Sanford, NC 27331

Project: Lee County Courts and Government Center

COR #: 047 - Add 6 sliding doors to the open cubbies

Gentlemen:

In accordance with the proposed change order request, we have reviewed the cost involved and request a change order of **$450.00.**

This proposal is based on work being performed during regular work hours, 8:00 am to 4:30 pm Monday through Friday. No overtime work has been included.

Acceptance of this change order request will add zero (0) days to the contract time.

This change order proposal is firm for thirty days from this date, after which time it is subject to adjustment.

Sincerely,

Vice President

Architect Signature

Owner Signature

Project: Lee County Courts and Government Center

Description:

Add 6 sliding doors to the open cubbies

Date: 08/04/2021
Job: 01-20-046
COR#: 047
No. of Days

Cost Code	Description	Quantity	Unit	Unit Price Mtl	Unit Price Lbr	Material	Labor	Subcontract	Total
						-	-		-
06-400	**Thompson Millwork**					-	-	420.00	420.00
						-		-	-
						-	-		-
						-	-		-
						-	-

THOMPSON MILLWORK
200 REDMAN CROSSING MEBANE, NC 27302 919-596-8236 THOMPSONMILLWORK.COM

CHANGE ORDER

Date: 7/8/2021

To: Brooke Poe, BAR Construction Company

Location: 106 Hillcrest Dr, Sanford, NC 27330

Project: Lee County - Tax Dept area in the Government Center building

We propose to furnish the items of millwork as listed below for the project named above, in accordance with the plans and specifications as prepared by the above architect for the sum of, $420.00. This price is firm for 30 days from the date of this quotation. All items are quoted FOB job site installed.

We include:

1) Two sliding doors per open cabinet, six total.
2) Delivery included
3) Installation included

We do not include:

1. Items of framing, furring, blocking, grounds, sheathing, or underlayment.

Respectfully submitted,

Will Cowart
Project Manager
Thompson Millwork

Acceptance of Proposal

The prices, conditions, and specifications as listed above are satisfactory and hereby approved.
Authorization to proceed with the work is granted.

Signature _____

Date of Acceptance _____

BAR CONSTRUCTION COMPANY, INC.

Established 1976

611-A Industrial Ave. · Greensboro, NC 27406 · (336) 274-2477 · Fax (336) 274-8694

October 29, 2021

Mr. Santiago Giraldo
Lee County, North Carolina
408 Summit Drive
Sanford, NC 27331

Project: Lee County Courts and Government Center

COR #: 061 - Painting at municipal building phase 1 & 2

Gentlemen:

In accordance with the proposed change order request, we have reviewed the cost involved and request a change order of **$7,570.00.**

This proposal is based on work being performed during regular work hours, 8:00 am to 4:30 pm Monday through Friday. No overtime work has been included.

Acceptance of this change order request will add zero (0) days to the contract time.

This change order proposal is firm for **fifteen days** from this date, after which time it is subject to adjustment.

Sincerely,

Vice President

Architect Signature

Owner Signature

Project: Lee County Courts and Government Center

Description: Painting at municipal building phase 1 & 2

Date: 10/29/2021
Job: 01-20-046
COR#: 061
No. of Days

Cost Code	Description	Quantity	Unit	Unit Price Mtl	Unit Price Lbr	Material	Labor	Subcontract	Total
						-	-		-
	D9 Painting Group					-	-	7,065.00	7,065.00
						-		-	-
						-	-		-
						-	-		-
						-	-

D9 PAINTNG GROUP, LLC

CHANGE PROPOSAL FORM

Project: Lee County Main Courthouse
GC: Bar Construction
Contractor: D9 Painting Group, LLC

Proposal #:
Project #:
Contractor #:

Description of change:

Painting at Municiple Building Phase 1 & 2

				SUBTOTALS
Materials	(Attach list with Qty, Item, Unit $, Unit mh, Total mh, OT mh, Total $)			
	1. Total Direct Cost of Materials		$1,090.15	
	2. Overhead & Profit on Item 1.	5%	$0.00	
	3. Sales Tax	7.25%	$79.04	
	4. Shipping & Transportation		$0.00	$1,169.19
Labor				
	5. Total Direct Cost of Labor		$5,896.00	
	6. Overhead & Profit on Item 5.	5%	$0.00	
	7. Labor Burden	30%	$0.00	$5,896.00
Equipment				
	8. Equipment Costs		$0.00	
	9. Overhead & Profit on Item 8.	10%	$0.00	$0.00
Subcontractors	(Include quotes with material & equipment backup)			
	10. Subcontractors		$0.00	
			$0.00	
			$0.00	
	11. Overhead & Profit on Item 10.	2.5%	$0.00	$0.00
			Subtotal of Proposal	$7,065.19
	12. Bonds (% of subtotal of proposal)	0.0%		$0.00
			TOTAL OF CHANGE PROPOSAL	$7,065.00

Time Extension Request: 0 day(s). Schedule Activity # Affected:

The Contractor agrees to perform the work outlined in this change proposal for the amount specified above and in accordance with the Contract documents if the work is authorized by the Owner.

Contractor's Signature: Steven Finnell **Date:** 10/26/2021

Approval Recommended by Design Consultant: _____ **Date:** _____

Owner's Representative Approval: _____ **Date:** _____

BAR CONSTRUCTION COMPANY, INC. ESTABLISHED 1976

611-A INDUSTRIAL AVE. · GREENSBORO, NC 27406 · (336) 274-2477 · FAX (336) 274-8694

December 17, 2021

Mr. Santiago Giraldo
Lee County, North Carolina
408 Summit Drive
Sanford, NC 27331

Project: Lee County Courts and Government Center

COR #: 064 - Air distribution changes for phase 1 and 2 due to ceiling types change

Gentlemen:

In accordance with the proposed change order request, we have reviewed the cost involved and request a change order of **$1,447.00.**

This proposal is based on work being performed during regular work hours, 8:00 am to 4:30 pm Monday through Friday. No overtime work has been included.

Acceptance of this change order request will add zero (0) days to the contract time.

This change order proposal is firm for thirty days from this date, after which time it is subject to adjustment.

Sincerely,

Vice President

Architect Signature

Owner Signature

Project: Lee County Courts and Government Center

Date: 12/17/2021
Job: 01-20-046
COR#: 064
No. of Days

Description:
Air distribution changes for phase 1 and 2 due to ceiling types change

Cost Code	Description	Quantity	Unit	Unit Price Mtl	Unit Price Lbr	Material	Labor	Subcontract	Total
						-	-		-
	Mechworks Mechanical					-	-	1,351.00	1,351.00
						-		-	-
						-	-		-
						-	-		-
						-	-

MECHWORKS MECHANICAL
CHANGE PROPOSAL FORM

Project:	Lee County Register of Deeds	**Proposal #:**	CO-7
Contract:	HVAC	**Project #:**	2037
Contractor:	Mechworks	**Date:**	12/10/2021

Description of change:
Air distribution changes for Phase 1 and 2 due to ceiling types changes. Approval in weekly meeting on 8-11-21 by Moseley Architects (Paul Luzier).

					SUBTOTALS
Materials	(Attach list with Qty, Item, Unit $, Unit mh, Total mh, OT mh, Total $)				
	1 Total Direct Cost of Materials			$1,107	
	2 Overhead & Profit on Item 1 (15% maximum)			$166	
	3 Sales Tax			$77	
	4 Shipping & Transportation			$0	$1,351
Labor					
	5 Total Man-hours:	0 MH @	$27.00 /hr.	$0	
	6 Overhead & Profit on Item 5 (15% maximum)			$0	
	7 Payroll Taxes & Insurance	30.0%		$0	$0
Equipment Rental	(Include quotes)				
	8 Equipment Rental			$0	
	9 Overhead & Profit on Item 8. (6% maximum)			$0	$0
Subcontractors	(Include quotes with material & equipment backup)				
	10 Subcontractors			$0	
	11 Overhead & Profit on Item 10. (6% maximum)			$0	$0
			Subtotal of Proposal		$1,351
	12 Insurance		0.0%		$0
			TOTAL OF CHANGE PROPOSAL		$1,351

Time Extension Requests: 0 Day(s)

Schedule Activity # Affected:

The Contractor agrees to perform the work outlined in this change proposal for the amount specified above and in accordance with the Contract documents if the work is authorized by the Owner.

Contractor's Signature: _____ **Date:** _____

Approval Recommended by Design Consultant: _____ **Date:** _____

Owner's Representative Approval: _____ **Date:** _____

MECHWORKS MECHANICAL
CHANGE ORDER PROPOSAL

Project: Lee County Register of Deeds
Contract: HVAC
Contractor: Mechworks

Proposal #: CO-9
Project #: 2037
Date: 12/10/2021

Project Allowed Percentages:

Ovhd and Profit on Materials	15%
Ovhd and Profit on Labor	15%
Payroll Taxes and Insurance	30%
Ovhd and Profit on Equip Rentals	6%
Ovhd and Profit on Subcontractors	6%
Insurance	0%
Tax Rate	7.0%

MATERIALS				
SHEET METAL				$0
PIPING				$0
EQUIPMENT				$1,107
OTHER				$0
OTHER				$0
CONSUMABLES				$0
TOTAL MAT'S		XXX	XXX	$1,107
SHIPPING & TRANS.		DAY	RATE	COST
SHIPPING	2 TON DEL. TRK W/FUEL	0	$100	$0
TRANSPORTATION	1/2 PICK-UP W/FUEL	0	$75	$0
TOTAL SHIP & TRANS.		XXX	XXX	$0
LABOR	Enter Rate $27	MH	RATE	COST
UNLOAD		0	$27	$0
DISTRIBUTE		0	$27	$0
INSTALL SHEET METAL MATERIALS		0	$27	$0
INSTALL PIPE MATERIALS		0	$27	$0
SET EQUIPMENT.			$27	$0
BALANCE SYSTEM.		0	$27	$0
COORDINATION WITH OTHER TRADES		0	$27	$0
OTHER		0	$27	$0
OTHER		0	$27	$0
OTHER		0	$27	$0
OTHER		0	$27	$0
TOTAL LABOR		0	XXX	$0
EQUIPMENT RENTALS	(rates per day, 1 day min., except crane)	DAY	RATE	COST
MAN LIFT	(W/FUEL & DELIVERY)	0	$275	$0
SCISSOR LIFT	(W/FUEL & DELIVERY)	0	$275	$0
WELDER	(W/FUEL)	0	$50	$0
300A THREADER	(W/DIES-CUTTER-REAMER)	0	$25	$0
ELECT POWER TOOL	(PORT-A-BAND-ROTOR DRILL-GRINDER)	0	$10	$0
STORAGE TRAILER	(W/DELIVERY)	0	$15	$0
6000LB LULL	(W/FUEL & DELIVERY)	0	$450	$0
PLATE TAMP	(W/FUEL)	0	$150	$0
BACKHOE	(W/FUEL & DELIVERY)	0	$400	$0
MINI EXCAVATOR	(W/FUEL & DELIVERY)	0	$325	$0
CRANE (per hr.)	(4HR MIN.@$400 PER HR.)	0	$400	$0
OTHER		0	$0	$0
TOTAL EQUIPMENT		XXX	XXX	$0
SUBCONTRACTORS		XXX	XXX	XXX
CONTROLS				$0
WIRING		XXX	XXX	$0
INSULATION		XXX	XXX	$0
AIR/WATER BALANCE		XXX	XXX	$0
WELDING	(WELDING BASED @ $60 HR or $500/Day)	0	$500	$0
OTHER		XXX	XXX	$0
TOTAL SUB.		XXX	XXX	$0

MECHWORKS

Job Name: Lee County Register of Deeds $ - $ - Labor Rate $ 27.00
Date: 12/10/2021 $ -

QTY	MATERIAL	UNIT COST	TOTAL COST	LABOR UNITS	TOTAL UNITS	TOTAL LABOR
	Sheet Metal Materials					
		$ -	$ -	0.00	0.00	$ -
		$ -	$ -	0.00	0.00	$ -
		$ -	$ -	0.00	0.00	$ -
		$ -	$ -	0.00	0.00	$ -
		$ -	$ -	0.00	0.00	$ -
		$ -	$ -	0.00	0.00	$ -
		$ -	$ -	0.00	0.00	$ -
		$ -	$ -	0.00	0.00	$ -
		$ -	$ -	0.00	0.00	$ -
		$ -	$ -	0.00	0.00	$ -
		$ -	$ -	0.00	0.00	$ -
		$ -	$ -	0.00	0.00	$ -
		$ -	$ -	0.00	0.00	$ -
		$ -	$ -	0.00	0.00	$ -
		$ -	$ -	0.00	0.00	$ -
		$ -	$ -	0.00	0.00	$ -
	Sub Total Sheet Metal Materials		$ -		0.00	$ -
	Piping Materials					
		$ -	$ -	0.00	0.00	$ -
		$ -	$ -	0.00	0.00	$ -
		$ -	$ -	0.00	0.00	$ -
		$ -	$ -	0.00	0.00	$ -
		$ -	$ -	0.00	0.00	$ -
		$ -	$ -	0.00	0.00	$ -
		$ -	$ -	0.00	0.00	$ -
		$ -	$ -	0.00	0.00	$ -
		$ -	$ -	0.00	0.00	$ -
		$ -	$ -	0.00	0.00	$ -
		$ -	$ -	0.00	0.00	$ -
		$ -	$ -	0.00	0.00	$ -
		$ -	$ -	0.00	0.00	$ -
		$ -	$ -	0.00	0.00	$ -
		$ -	$ -	0.00	0.00	$ -
	Sub Total Piping Materials		$ -		0.00	$ -
	Equipment					
1	lot of AD 5-day quick ship	$ 999.00	$ 999.00	0.00	0.00	$ -
1	lot of plaster frames	$ 108.00	$ 108.00	0.00	0.00	$ -
		$ -	$ -	0.00	0.00	$ -
		$ -	$ -	0.00	0.00	$ -
		$ -	$ -	0.00	0.00	$ -
		$ -	$ -	0.00	0.00	$ -
		$ -	$ -	0.00	0.00	$ -
		$ -	$ -	0.00	0.00	$ -
		$ -	$ -	0.00	0.00	$ -
		$ -	$ -	0.00	0.00	$ -
		$ -	$ -	0.00	0.00	$ -
		$ -	$ -	0.00	0.00	$ -
	Sub Total Equipment		$ 1,107.00		0.00	$ -

Total Material & Labor Hours and Cost	$ 1,107.00		1.00	$ -

Shipping and Receiving Costs	$ -

HOFFMAN & HOFFMAN, INC.

PROPOSAL

BRANCH OFFICE LOCATION
2741 Noblin Road, Suite 100
Raleigh, NC 27604

CONTACT
Name: Ben Bingham
Phone: 919-747-2748
Email: ben.bingham@hoffman-hoffman.com

DATE	PROPOSAL TO	PROJECT
8/12/2021 REVISED	Mechworks Attn: Shaun Hathaway	Lee Co. Jail ADD

For your consideration, we are pleased to make the following quote to provide equipment for the above project. Although we have exercised due care in estimating the materials, our count is not guaranteed and should be verified by you. Prices can be adjusted accordingly. Hoffman & Hoffman, Inc. extends to Buyer the warranties of the respective manufacturers of the products sold. HOFFMAN & HOFFMAN, INC. ITSELF MAKES NO WARRANTIES, EXPRESSED OR IMPLIED, AS TO ANY MATTER WHATSOEVER, INCLUDING, WITHOUT LIMITATION, THE CONDITION OF ANY GOODS SOLD, THEIR MERCHANTABILITY OR FITNESS FOR A PARTICULAR PURPOSE. All purchase orders are subject to acceptance by Hoffman & Hoffman at its home office, and your acceptance of this quote shall also be deemed as approval by the applicable engineer, architect, and/or owner. THIS PROPOSAL IS SUBMITTED FOR ACCEPTANCE WITHIN 30 DAYS FROM THE DATE OF THE PROPOSAL. Prices are firm after acceptance, provided the Buyer releases the order for production and shipment within 60 days thereafter. Orders released over 60 days after acceptance may be subject to escalation.

A	4	***Price*** Aluminum Plaster Frames 2 x 2 (2), 1 x 1 (2)
	1	Tag E1 Model 635 Sidewall Return Grille 6 x 6
	3	Tag E3 Model 635 2 x 2 Lay-In Return Grille 6 x 6 Neck
	1	Tag E3 Model 635 1 x 1 Lay-In Return Grille 6 x 6 Neck
	3	Tag E4 Model 635 2 x 2 Lay-In Return Grille 8 x 8 Neck
	1	Tag S1 Model ASCD 1 x 1 Lay-In Supply Diffuser 6" Neck
	4	Tag S3 Model 620 Sidewall Supply Grilles 8 x 8 Neck
	1	Tag S3 Model 620 Sidewall Supply Grilles with Sq. to Rd., 6 x 6 x 6 Neck

STANDARD LEADTIME 5-6 WEEKS MFG.

YOUR COST FREIGHT ALLOWED	***$640.00***
YOUR COST 10 DAYS MFG.	***$795.00***
YOUR COST 5 DAYS MFG.	***$999.00***

FREIGHT: F.O.B. FACTORY XX ALLOWED

By: Ben Bingham/tc 919-781-8011

When Hoffman & Hoffman is the seller, Hoffman & Hoffman shall perform its work and/or sell goods only in accordance with its standard Terms and Conditions, which terms are attached and incorporated herein by reference. When a manufacturer is the seller, all sales are subject to the manufacturer's terms and conditions. If you do not have a copy of the Hoffman & Hoffman Terms and Conditions, please request one. **THIS PROPOSAL IS SUBMITTED FOR ACCEPTANCE WITHIN 30 DAYS OF THIS DATE.**

BRANCH OFFICES Asheville, NC • Charleston, SC • Charlotte, NC • Chattanooga, TN • Chesapeake, VA • Columbia, SC • Greensboro, NC • Greenville, SC • Knoxville, TN • Raleigh, NC • Richmond, VA • Roanoke, VA • Wilmington, NC

Terms and Conditions

January 2021

"H&H" shall mean Hoffman & Hoffman, Inc., and its officers, employees, and agents. "Buyer" shall mean the person or entity entering into this Agreement with H&H to purchase goods and/or services.

1. Controlling Terms & Conditions: This Agreement, upon Buyer's acceptance, is limited to the terms and conditions stated herein, despite any additional or conflicting terms and conditions contained in any purchase order, any other document presented by Buyer, or any contract document between Buyer and any third-party (i.e. an owner, other contractor, etc.), all of which additional or conflicting terms are hereby rejected by H&H. No waiver of, or modification to, these Terms and Conditions shall be valid unless made in writing and signed by an authorized representative of H&H. H&H salespeople are not authorized to waive or modify any Terms and Conditions. The terms of any written proposal / quote made by H&H ("proposal") and these Terms and Conditions shall constitute the entire agreement of the parties. H&H rejects any revision of, addition to, or deletion of any term in this Agreement not specifically accepted by an authorized representative of H&H in writing.

2. Acceptance: Any H&H proposal expires if not accepted by Buyer within thirty (30) days from the date of the proposal. Prices are firm after acceptance, provided Buyer releases the order for production and shipment by written notice to H&H within sixty (60) days of placing the order. Otherwise, prices are subject to escalation. Typographical and clerical errors in quotations, orders and acknowledgments are subject to correction. Buyer is deemed to have accepted any H&H proposal to purchase goods or services, including these Terms and Conditions, when Buyer either (a) receives and retains an acknowledgement from H&H without written objection within ten (10) days, (b) accepts delivery of all or any part of the goods ordered, (c) provides to H&H delivery dates, shipping instructions, or other instructions evidencing acceptance, or (d) otherwise executes or assents to any proposal or these Terms and Conditions. If Buyer accepts any proposal, without the addition of any other terms and conditions or any other Buyer modification, Buyer's order shall be deemed acceptance of the proposal subject solely to H&H's terms and conditions. If Buyer's order is expressly conditioned upon H&H's acceptance or assent to terms and/or conditions other than those stated herein, return or acknowledgment of such order by H&H with H&H's Terms and Conditions attached or referenced serves as H&H's notice of objection to, and rejection of, Buyer's terms and as H&H's counter-offer to provide goods or services in accordance with the H&H proposal and H&H's Terms and Conditions. If thereafter Buyer does not reject or object in writing to H&H within ten (10) days by written notice to Legal@hoffman-hoffman.com, H&H's counter-offer will be deemed accepted by Buyer. In any event, Buyer's acceptance of all or any part of any goods ordered will constitute Buyer's acceptance of H&H's proposal subject to H&H's Terms and Conditions.

3. Terms of Payment / Taxes: Payment is due net thirty (30) days from the date of each H&H invoice to Buyer. Interest at the rate of 1 1/2% per month (or the highest interest rate allowed by applicable law, if lower) may be charged after the 30-day period until payment is received. H&H accepts credit card payments. If Buyer chooses to pay by credit card, Buyer is subject to an additional convenience fee of 3.0% of the total amount paid by credit card. Buyer shall pay all costs of collection incurred by H&H including, but not limited to, reasonable attorneys' fees, collection fees, and court costs. H&H may suspend all further services and transactions (regardless of their status) without liability if Buyer's account is more than thirty (30) days past due or if Buyer's credit, in the sole judgment of H&H, is impaired at any time. Partial invoices may be submitted for any portion of completed work and/or delivered materials. While risk of loss passes to Buyer, Seller will have a purchase-money security interest in all goods (including any accessories and substitutions) purchased under this Agreement to secure payment in full of all amounts due H&H, and the underlying proposal, together with these Terms and Conditions, form a security agreement (as defined by the UCC.) Buyer shall keep all goods purchased under this Agreement free of all taxes and encumbrances, shall not remove said goods from their original installation point and shall not assign or transfer any interest in said goods until all payments due H&H have been made. The purchase-money security interest granted herein attaches upon H&H's acceptance or acknowledgment of this Agreement and Buyer's receipt of said goods, but prior to installation. Buyer will have no rights to set off against any amounts which become payable to H&H under this Agreement or otherwise. Notwithstanding any Buyer form or document to the contrary, H&H shall not release any rights to make a lien and/or bond claim, or other claim for damages, in connection with goods purchased or services provided until H&H has obtained payment in full for such goods or services and any damages. Furthermore, Buyer is responsible to pay in full for the goods or services provided by H&H regardless of whether such goods or services are funded for Buyer pursuant to any extraneous contract and/or by an applicable project owner or contractor. Unless otherwise agreed by H&H in writing, Buyer shall pay to H&H, in addition to the contract price, all sales, use, excise, privilege or other taxes imposed by any local, state or federal taxing authority payable in connection with the goods or services furnished.

4. Shipments / Claims: All shipments of goods are at Buyer's risk, f.o.b. factory, or if shipped from another location, f.o.b. point of shipment, with charges either allowed, added to invoice, or collected as noted. Any claims for damage or shortage or loss in transit must be filed by Buyer against the applicable carrier. If requested, H&H will reasonably assist the Buyer when making its claim for damages and/or losses while in transit. Claims against factory shortages will not be considered unless made within sixty (60) days after Buyer's receipt of the goods.

5. Approval: H&H shall not be liable in any way should any third party (such as a project architect, engineer, owner, etc.) fail to accept or approve equipment ordered by Buyer. H&H cannot guarantee to meet or equal specifications written around another make of equipment different than that purchased by Buyer.

6. Warranties and Liability: Upon condition that H&H receives payment in full for all amounts owed, H&H extends to Buyer the manufacturer's warranty (a copy of which is available upon request), and manufacturer's warranty is in lieu of any warranties contained in any applicable project contract, conditions, plans, or specifications. H&H ITSELF MAKES NO OTHER WARRANTIES, EXPRESS OR IMPLIED, AS TO ANY MATTER WHATSOEVER, INCLUDING, WITHOUT LIMITATION, THE CONDITION OF THE EQUIPMENT, ITS MERCHANTABILITY, IMPLIED WARRANTIES OF DESIGN OR FITNESS FOR A PARTICULAR PURPOSE. H&H SHALL HAVE NO LIABILITY FOR ANY DIRECT DAMAGES BY REASON OF FAILURE OF THE EQUIPMENT TO OPERATE OR FAULTY OPERATION OR MISUSE OF THE EQUIPMENT, AND UNDER NO CIRCUMSTANCES SHALL H&H BE LIABLE TO BUYER OR TO ANY THIRD PARTY FOR ANY INDIRECT, INCIDENTAL, CONSEQUENTIAL, SPECIAL, PUNITIVE, EXEMPLARY OR LIQUIDATED DAMAGES OR LOSSES, INCLUDING BUT NOT LIMITED TO, LOSS OF USE, INCOME, PROFIT OR PRODUCTION, LOST DATA, SPOILAGE, DELAY, OR INCREASED COST OF OPERATION. SAID EXCLUSIONS APPLY EVEN IF H&H HAS BEEN ADVISED OF SUCH POSSIBLE DAMAGES OR IF SUCH POSSIBLE DAMAGES WERE REASONABLY FORESEEABLE.

7. Design and Workmanship: Buyer acknowledges that H&H is not responsible for the design of goods or services purchased and did not participate in any project design in connection with such goods or services. (a) Goods shall be fabricated in accordance with the contract drawings and specifications furnished by the Buyer and shop drawings approved by Buyer or its representative. (b) H&H shall not be responsible for the suitability, adequacy or legality of use of any designs, plans and specifications, and the Buyer shall indemnify H&H for any loss, damages and expenses incurred by or charged against H&H by reason of any alleged patent or copyright infringement, personal injury or property damage allegedly arising out of the use of designs, plans, and specifications furnished by Buyer for the goods. (c) Once shop drawings are approved by Buyer, Buyer shall reimburse H&H for all expenses resulting from changes thereto. Charges for extra work outside the limits of the proposal shall be mutually agreed upon by H&H and Buyer at the time such expenses arise, or H&H shall not be responsible for the extra work.

8. Limitation of Remedy: H&H shall have no liability for any damage caused by negligence, accident, misuse, improper storage, improper installation, improper service, maintenance or operation of equipment by Buyer or any third party. To the extent H&H is liable to Buyer under any legal theory (whether under warranty, negligence, strict liability or contract). Buyer's sole and exclusive remedy is limited to one of the following, which H&H shall elect in its sole and absolute discretion: (a) repair or replacement of purchased equipment or its parts by H&H or its duly authorized representative or (b) refund of the purchase price. In no event shall H&H's liability exceed the purchase price paid by Buyer under this Agreement, and Buyer waives all other remedies at law or in equity. Furthermore, Buyer waives any claim with respect to quantity or quality of goods or services purchased, unless Buyer notifies H&H in writing within ten (10) days of the date Buyer discovered, or by reasonable inspection should have discovered, the basis for such claim. Under no event shall H&H owe any duty or have any obligation whatsoever to any customer or client of Buyer or to any other third party.

9. Hazards: H&H is not responsible for the identification, detection, abatement, encapsulation or removal of hazardous substances, such as (without limitation) asbestos, products or materials containing asbestos, mold, fungi, mildew, or bacteria. At all times now and in the future, H&H takes no responsibility for and makes no representations or warranties concerning any existing or future hazardous substance or condition (i.e. mold) or the remedy or prevention thereof. Furthermore, Buyer has a duty to alert H&H of any known or likely potential hazards at any project site where H&H's representatives and affiliates may be present in connection with this Agreement.

10. Indemnification / Insurance: To the fullest extent permitted by law, Buyer shall indemnify, hold harmless and defend H&H and its officers, employees and agents from and against all claims, demands, liabilities, suits, judgments, awards, or expenses of any kind (including reasonable attorneys' fees and costs incurred defending such claims or demands, regardless of whether they result in legal action or are prosecuted to final judgment or award), which result or arise from Buyer's purchase, installation, or use of goods or services provided by H&H. Buyer shall indemnify H&H against, without limitation, liability arising from any acts or omissions whether deemed negligent, accidental or intentional, which is caused, in part, by the active or passive negligence or other fault of H&H. To the fullest extent permitted by law, the obligations of defense and indemnification set forth herein shall be binding upon Buyer no matter what the nature of the claim asserted may be (whether it be for negligence, warranty, strict liability, or otherwise) and shall be binding even if H&H is alleged or proven to have acted negligently; provided, however, that Buyer shall have no obligation to provide indemnification to H&H if the claim asserted arises in negligence and is finally adjudicated to have arisen solely from the negligence of H&H. Buyer shall also indemnify and hold harmless H&H from all liability for taxes owing in connection with Buyer's purchase of goods or services. The obligations and rights to indemnity herein shall not negate, abridge or reduce other such rights or obligations under law. This Agreement does not require Buyer to indemnify H&H for H&H's own negligent or intentional acts or omissions to the extent that doing so would violate applicable law. Buyer and H&H jointly authorize and request any court or arbitrator considering the enforceability of this paragraph to re-write this paragraph so that it requires Buyer to defend, indemnify, and hold H&H harmless to the fullest extent permitted by applicable law. Upon written request of Buyer, H&H shall only be required to name Buyer as an additional insured to the coverage types listed on H&H's standard Certificate of Insurance (available upon request). In no event does H&H waive any rights of subrogation.

11. Claims Resolution / Governing Law: Unless H&H elects otherwise, all claims and disputes between Buyer and H&H arising out of or relating to performance of any agreement or breach thereof must be decided by binding arbitration in accordance with the Construction Industry Arbitration rules of the American Arbitration Association (AAA). Demand for Arbitration must be filed in the regional office of the AAA closest to Greensboro, North Carolina, and the filing party must serve such Notice upon the other party in accordance with AAA rules. The procedural and substantive law of the State of North Carolina must apply in and to all arbitration proceedings, and Greensboro, North Carolina, is designated as the sole and exclusive venue for such proceedings. Any award arising from such proceedings shall be final and binding upon the parties and enforceable in accordance with the Federal Arbitration Act. H&H and Buyer agree that their transactions involve interstate commerce. This Agreement shall be governed by and construed solely in accordance with the laws of the State of North Carolina, without regard to principles of conflicts of laws. H&H shall have the sole and exclusive right, at H&H's sole and absolute discretion, to waive the arbitration provision and to elect to litigate any claim or dispute in a court of appropriate jurisdiction. Unless H&H elects another court of appropriate jurisdiction in H&H's sole and absolute discretion, the state courts located in Greensboro, Guilford County, North Carolina, shall be the sole and exclusive forum for any litigation between H&H and Buyer. Buyer consents to the jurisdiction of the state and federal courts located in Greensboro, Guilford County, North Carolina.

12. Delays / Penalties / Force Majeure: Delivery dates are approximate and not guaranteed. In no event and under no circumstances whatsoever will H&H be liable for any damages or expenses caused by any failure or delay in making delivery of goods or in performing services hereunder. No penalty clause or liquidated damages of any kind (for delays or otherwise) apply to H&H unless pre-approved in writing by an H&H officer. Furthermore, in no event and under no circumstances whatsoever will H&H be liable under this Agreement for any event of force majeure, including but not limited to, acts of God, riot, war, terrorism, inclement weather, labor strikes, material shortages, pandemic, and other causes beyond H&H's reasonable control.

13. Cancellations / Returns: If an order is canceled through no fault of H&H, the Buyer shall reimburse H&H for all expenses, costs, damages and losses (including lost profits) incurred by H&H in connection with the order and its cancellation. Goods may not be returned except by written permission of a representative of H&H, and when so returned, shall be subject to handling and transportation charges.

14. Equal Employment Opportunity / Affirmative Action Clause: H&H and Buyer shall abide by the requirements of 41 CFR 60-1.4(a), 60-300.5(a) and 60-741.5(a). These regulations prohibit discrimination against qualified individuals based on their status as protected veterans or individuals with disabilities and prohibit discrimination against all individuals based on their race, color, religion, sex, sexual orientation, gender identity or national origin. Moreover, these regulations require that covered prime contractors and subcontractors take affirmative action to employ and advance in employment individuals without regard to race, color, religion, sex, sexual orientation, gender identity, national origin, disability or veteran status.

15. Government Contracts / Disadvantaged Business Entities: If Buyer's purchase of goods or services is in any way connected to any federal, state, or local government project, which implicates or utilizes any Small, Minority or Disadvantaged Business incentives or qualifications (or other similar laws or regulations), Buyer represents and certifies to H&H that Buyer is performing a commercially useful function on such project.

16. Trust Funds: Buyer agrees that all funds Buyer receives that result from the labor, materials, and/or equipment furnished by H&H will be considered "Trust Funds." Buyer will hold all Trust Funds in trust for the sole and exclusive benefit of H&H. Buyer will segregate Trust Funds from other funds. Buyer will account for all Trust Funds and deliver all Trust Funds to H&H. Buyer will not use Trust Funds for any purpose other than paying H&H.

HOFFMAN & HOFFMAN, INC.

PROPOSAL

BRANCH OFFICE LOCATION
2741 Noblin Road, Suite 100
Raleigh, NC 27604

CONTACT
Name: Ben Bingham
Phone: 919-747-2748
Email: ben.bingham@hoffman-hoffman.com

DATE	PROPOSAL TO	PROJECT
8/16/2021	Mechworks Attn: Shaun Hathaway	Lee County Jail Plaster Frames

For your consideration, we are pleased to make the following quote to provide equipment for the above project. Although we have exercised due care in estimating the materials, our count is not guaranteed and should be verified by you. Prices can be adjusted accordingly. Hoffman & Hoffman, Inc. extends to Buyer the warranties of the respective manufacturers of the products sold. HOFFMAN & HOFFMAN, INC. ITSELF MAKES NO WARRANTIES, EXPRESSED OR IMPLIED, AS TO ANY MATTER WHATSOEVER, INCLUDING, WITHOUT LIMITATION, THE CONDITION OF ANY GOODS SOLD, THEIR MERCHANTABILITY OR FITNESS FOR A PARTICULAR PURPOSE. All purchase orders are subject to acceptance by Hoffman & Hoffman at its home office, and your acceptance of this quote shall also be deemed as approval by the applicable engineer, architect, and/or owner. THIS PROPOSAL IS SUBMITTED FOR ACCEPTANCE WITHIN **30 DAYS** FROM THE DATE OF THE PROPOSAL. Prices are firm after acceptance, provided the Buyer releases the order for production and shipment within 60 days thereafter. Orders released over 60 days after acceptance may be subject to escalation.

A 2 ***Price*** Model SPF Steel Plaster Frames 2 X 2

Ship From Greensboro Stock

YOUR COST FREIGHT ALLOWED ***$108.00***

FREIGHT: F.O.B. FACTORY XX ALLOWED

By: Ben Bingham/tc 919-781-8011

When Hoffman & Hoffman is the seller, Hoffman & Hoffman shall perform its work and/or sell goods only in accordance with its standard Terms and Conditions, which terms are attached and incorporated herein by reference. When a manufacturer is the seller, all sales are subject to the manufacturer's terms and conditions. If you do not have a copy of the Hoffman & Hoffman Terms and Conditions, please request one. **THIS PROPOSAL IS SUBMITTED FOR ACCEPTANCE WITHIN 30 DAYS OF THIS DATE.**

BRANCH OFFICES Asheville, NC • Charleston, SC • Charlotte, NC • Chattanooga, TN • Chesapeake, VA • Columbia, SC • Greensboro, NC • Greenville, SC • Knoxville, TN • Raleigh, NC • Richmond, VA • Roanoke, VA • Wilmington, NC

Terms and Conditions

January 2021

"H&H" shall mean Hoffman & Hoffman, Inc., and its officers, employees, and agents. "Buyer" shall mean the person or entity entering into this Agreement with H&H to purchase goods and/or services.

1. **Controlling Terms & Conditions:** This Agreement, upon Buyer's acceptance, is limited to the terms and conditions stated herein, despite any additional or conflicting terms and conditions contained in any purchase order, any other document presented by Buyer, or any contract document between Buyer and any third-party (i.e. an owner, other contractor, etc.), all of which additional or conflicting terms are hereby rejected by H&H. No waiver of, or modification to, these Terms and Conditions shall be valid unless made in writing and signed by an authorized representative of H&H. H&H salespeople are not authorized to waive or modify any Terms and Conditions. The terms of any written proposal / quote made by H&H ("proposal") and these Terms and Conditions shall constitute the entire agreement of the parties. H&H rejects any revision of, addition to, or deletion of any term in this Agreement not specifically accepted by an authorized representative of H&H in writing.

2. **Acceptance:** Any H&H proposal expires if not accepted by Buyer within thirty (30) days from the date of the proposal. Prices are firm after acceptance, provided Buyer releases the order for production and shipment by written notice to H&H within sixty (60) days of placing the order. Otherwise, prices are subject to escalation. Typographical and clerical errors in quotations, orders and acknowledgments are subject to correction. Buyer is deemed to have accepted any H&H proposal to purchase goods or services, including these Terms and Conditions, when Buyer either (a) receives and retains an acknowledgement from H&H without written objection within ten (10) days, (b) accepts delivery of all or any part of the goods ordered, (c) provides to H&H delivery dates, shipping instructions, or other instructions evidencing acceptance, or (d) otherwise executes or assents to any proposal or these Terms and Conditions. If Buyer accepts any proposal, without the addition of any other terms and conditions or any other Buyer modification, Buyer's order shall be deemed acceptance of the proposal subject solely to H&H's terms and conditions. If Buyer's order is expressly conditioned upon H&H's acceptance or assent to terms and/or conditions other than those stated herein, return or acknowledgment of such order by H&H with H&H's Terms and Conditions attached or referenced serves as H&H's notice of objection to, and rejection of, Buyer's terms and as H&H's counter-offer to provide goods or services in accordance with the H&H proposal and H&H's Terms and Conditions. If thereafter Buyer does not reject or object in writing to H&H within ten (10) days by written notice to Legal@hoffman-hoffman.com, H&H's counter-offer will be deemed accepted by Buyer. In any event, Buyer's acceptance of all or any part of any goods ordered will constitute Buyer's acceptance of H&H's proposal subject to H&H's Terms and Conditions.

3. **Terms of Payment / Taxes:** Payment is due net thirty (30) days from the date of each H&H invoice to Buyer. Interest at the rate of 1 1/2% per month (or the highest interest rate allowed by applicable law, if lower) may be charged after the 30-day period until payment is received. H&H accepts credit card payments. If Buyer chooses to pay by credit card, Buyer is subject to an additional convenience fee of 3.0% of the total amount paid by credit card. Buyer shall pay all costs of collection incurred by H&H including, but not limited to, reasonable attorneys' fees, collection fees, and court costs. H&H may suspend all further services and transactions (regardless of their status) without liability if Buyer's account is more than thirty (30) days past due or if Buyer's credit, in the sole judgment of H&H, is impaired at any time. Partial invoices may be submitted for any portion of completed work and/or delivered materials. While risk of loss passes to Buyer, Seller will have a purchase-money security interest in all goods (including any accessories and substitutions) purchased under this Agreement to secure payment in full of all amounts due H&H, and the underlying proposal, together with these Terms and Conditions, form a security agreement (as defined by the UCC.) Buyer shall keep all goods purchased under this Agreement free of all taxes and encumbrances, shall not remove said goods from their original installation point and shall not assign or transfer any interest in said goods until all payments due H&H have been made. The purchase-money security interest granted herein attaches upon H&H's acceptance or acknowledgment of this Agreement and Buyer's receipt of said goods, but prior to installation. Buyer will have no rights to set off against any amounts which become payable to H&H under this Agreement or otherwise. Notwithstanding any Buyer form or document to the contrary, H&H shall not release any rights to make a lien and/or bond claim, or other claim for damages, in connection with goods purchased or services provided until H&H has obtained payment in full for such goods or services and any damages. Furthermore, Buyer is responsible to pay in full for the goods or services provided by H&H regardless of whether such goods or services are funded for Buyer pursuant to any extraneous contract and/or by an applicable project owner or contractor. Unless otherwise agreed by H&H in writing, Buyer shall pay to H&H, in addition to the contract price, all sales, use, excise, privilege or other taxes imposed by any local, state or federal taxing authority payable in connection with the goods or services furnished.

4. **Shipments / Claims:** All shipments of goods are at Buyer's risk, f.o.b. factory, or if shipped from another location, f.o.b. point of shipment, with charges either allowed, added to invoice, or collected as noted. Any claims for damage or shortage or loss in transit must be filed by Buyer against the applicable carrier. If requested, H&H will reasonably assist the Buyer when making its claim for damages and/or losses while in transit. Claims against factory shortages will not be considered unless made within sixty (60) days after Buyer's receipt of the goods.

5. **Approval:** H&H shall not be liable in any way should any third party (such as a project architect, engineer, owner, etc.) fail to accept or approve equipment ordered by Buyer. H&H cannot guarantee to meet or equal specifications written around another make of equipment different than that purchased by Buyer.

6. **Warranties and Liability:** Upon condition that H&H receives payment in full for all amounts owed, H&H extends to Buyer the manufacturer's warranty (a copy of which is available upon request), and manufacturer's warranty is in lieu of any warranties contained in any applicable project contract, conditions, plans, or specifications. H&H ITSELF MAKES NO OTHER WARRANTIES, EXPRESS OR IMPLIED, AS TO ANY MATTER WHATSOEVER, INCLUDING, WITHOUT LIMITATION, THE CONDITION OF THE EQUIPMENT, ITS MERCHANTABILITY, IMPLIED WARRANTIES OF DESIGN OR FITNESS FOR A PARTICULAR PURPOSE. H&H SHALL HAVE NO LIABILITY FOR ANY DIRECT DAMAGES BY REASON OF FAILURE OF THE EQUIPMENT TO OPERATE OR FAULTY OPERATION OR MISUSE OF THE EQUIPMENT, AND UNDER NO CIRCUMSTANCES SHALL H&H BE LIABLE TO BUYER OR TO ANY THIRD PARTY FOR ANY INDIRECT, INCIDENTAL, CONSEQUENTIAL, SPECIAL, PUNITIVE, EXEMPLARY OR LIQUIDATED DAMAGES OR LOSSES, INCLUDING BUT NOT LIMITED TO, LOSS OF USE, INCOME, PROFIT OR PRODUCTION, LOST DATA, SPOILAGE, DELAY, OR INCREASED COST OF OPERATION. SAID EXCLUSIONS APPLY EVEN IF H&H HAS BEEN ADVISED OF SUCH POSSIBLE DAMAGES OR IF SUCH POSSIBLE DAMAGES WERE REASONABLY FORESEEABLE.

7. **Design and Workmanship:** Buyer acknowledges that H&H is not responsible for the design of goods or services purchased and did not participate in any project design in connection with such goods or services. (a) Goods shall be fabricated in accordance with the contract drawings and specifications furnished by the Buyer and shop drawings approved by Buyer or its representative. (b) H&H shall not be responsible for the suitability, adequacy or legality of use of any designs, plans and specifications, and the Buyer shall indemnify H&H for any loss, damages and expenses incurred by or charged against H&H by reason of any alleged patent or copyright infringement, personal injury or property damage allegedly arising out of the use of designs, plans, and specifications furnished by Buyer for the goods. (c) Once shop drawings are approved by Buyer, Buyer shall reimburse H&H for all expenses resulting from changes thereto. Charges for extra work outside the limits of the proposal shall be mutually agreed upon by H&H and Buyer at the time such expenses arise, or H&H shall not be responsible for the extra work.

8. **Limitation of Remedy:** H&H shall have no liability for any damage caused by negligence, accident, misuse, improper storage, improper installation, improper service, maintenance or operation of equipment by Buyer or any third party. To the extent H&H is liable to Buyer under any legal theory (whether under warranty, negligence, strict liability or contract), Buyer's sole and exclusive remedy is limited to one of the following, which H&H shall elect in its sole and absolute discretion: (a) repair or replacement of purchased equipment or its parts by H&H or its duly authorized representative or (b) refund of the purchase price. In no event shall H&H's liability exceed the purchase price paid by Buyer under this Agreement, and Buyer waives all other remedies at law or in equity. Furthermore, Buyer waives any claim with respect to quantity or quality of goods or services purchased, unless Buyer notifies H&H in writing within ten (10) days of the date Buyer discovered, or by reasonable inspection should have discovered, the basis for such claim. Under no event shall H&H owe any duty or have any obligation whatsoever to any customer or client of Buyer or to any other third party.

9. **Hazards:** H&H is not responsible for the identification, detection, abatement, encapsulation or removal of hazardous substances, such as (without limitation) asbestos, products or materials containing asbestos, mold, fungi, mildew, or bacteria. At all times now and in the future, H&H takes no responsibility for and makes no representations or warranties concerning any existing or future hazardous substance or condition (i.e. mold) or the remedy or prevention thereof. Furthermore, Buyer has a duty to alert H&H of any known or likely potential hazards at any project site where H&H's representatives and affiliates may be present in connection with this Agreement.

10. **Indemnification / Insurance:** To the fullest extent permitted by law, Buyer shall indemnify, hold harmless and defend H&H and its officers, employees and agents from and against all claims, demands, liabilities, suits, judgments, awards, or expenses of any kind (including reasonable attorneys' fees and costs incurred defending such claims or demands, regardless of whether they result in legal action or are prosecuted to final judgment or award), which result or arise from Buyer's purchase, installation, or use of goods or services provided by H&H. Buyer shall indemnify H&H against, without limitation, liability arising from any acts or omissions whether deemed negligent, accidental or intentional, which is caused, in part, by the active or passive negligence or other fault of H&H. To the fullest extent permitted by law, the obligations of defense and indemnification set forth herein shall be binding upon Buyer no matter what the nature of the claim asserted may be (whether it be for negligence, warranty, strict liability, or otherwise) and shall be binding even if H&H is alleged or proven to have acted negligently; provided, however, that Buyer shall have no obligation to provide indemnification to H&H if the claim asserted arises in negligence and is finally adjudicated to have arisen solely from the negligence of H&H. Buyer shall also indemnify and hold harmless H&H from all liability for taxes owing in connection with Buyer's purchase of goods or services. The obligations and rights to indemnity herein shall not negate, abridge or reduce other such rights or obligations under law. This Agreement does not require Buyer to indemnify H&H for H&H's own negligent or intentional acts or omissions to the extent that doing so would violate applicable law. Buyer and H&H jointly authorize and request any court or arbitrator considering the enforceability of this paragraph to re-write this paragraph so that it requires Buyer to defend, indemnify, and hold H&H harmless to the fullest extent permitted by applicable law. Upon written request of Buyer, H&H shall only be required to name Buyer as an additional insured to the coverage types listed on H&H's standard Certificate of Insurance (available upon request). In no event does H&H waive any rights of subrogation.

11. **Claims Resolution / Governing Law:** Unless H&H elects otherwise, all claims and disputes between Buyer and H&H arising out of or relating to performance of any agreement or breach thereof must be decided by binding arbitration in accordance with the Construction Industry Arbitration rules of the American Arbitration Association (AAA). Demand for Arbitration must be filed in the regional office of the AAA closest to Greensboro, North Carolina, and the filing party must serve such Notice upon the other party in accordance with AAA rules. The procedural and substantive law of the State of North Carolina must apply in and to all arbitration proceedings, and Greensboro, North Carolina, is designated as the sole and exclusive venue for such proceedings. Any award arising from such proceedings shall be final and binding upon the parties and enforceable in accordance with the Federal Arbitration Act. H&H and Buyer agree that their transactions involve interstate commerce. This Agreement shall be governed by and construed solely in accordance with the laws of the State of North Carolina, without regard to principles of conflicts of laws. H&H shall have the sole and exclusive right, at H&H's sole and absolute discretion, to waive the arbitration provision and to elect to litigate any claim or dispute in a court of appropriate jurisdiction. Unless H&H elects another court of appropriate jurisdiction in H&H's sole and absolute discretion, the state courts located in Greensboro, Guilford County, North Carolina, shall be the sole and exclusive forum for any litigation between H&H and Buyer. Buyer consents to the jurisdiction of the state and federal courts located in Greensboro, Guilford County, North Carolina.

12. **Delays / Penalties / Force Majeure:** Delivery dates are approximate and not guaranteed. In no event and under no circumstances whatsoever will H&H be liable for any damages or expenses caused by any failure or delay in making delivery of goods or in performing services hereunder. No penalty clause or liquidated damages of any kind (for delays or otherwise) apply to H&H unless pre-approved in writing by an H&H officer. Furthermore, in no event and under no circumstances whatsoever will H&H be liable under this Agreement for any event of force majeure, including but not limited to, acts of God, riot, war, terrorism, inclement weather, labor strikes, material shortages, pandemic, and other causes beyond H&H's reasonable control.

13. **Cancellations / Returns:** If an order is canceled through no fault of H&H, the Buyer shall reimburse H&H for all expenses, costs, damages and losses (including lost profits) incurred by H&H in connection with the order and its cancellation. Goods may not be returned except by written permission of a representative of H&H, and when so returned, shall be subject to handling and transportation charges.

14. **Equal Employment Opportunity / Affirmative Action Clause:** H&H and Buyer shall abide by the requirements of 41 CFR 60-1.4(a), 60-300.5(a) and 60-741.5(a). These regulations prohibit discrimination against qualified individuals based on their status as protected veterans or individuals with disabilities and prohibit discrimination against all individuals based on their race, color, religion, sex, sexual orientation, gender identity or national origin. Moreover, these regulations require that covered prime contractors and subcontractors take affirmative action to employ and advance in employment individuals without regard to race, color, religion, sex, sexual orientation, gender identity, national origin, disability or veteran status.

15. **Government Contracts / Disadvantaged Business Entities:** If Buyer's purchase of goods or services is in any way connected to any federal, state, or local government project, which implicates or utilizes any Small, Minority or Disadvantaged Business incentives or qualifications (or other similar laws or regulations), Buyer represents and certifies to H&H that Buyer is performing a commercially useful function on such project.

16. **Trust Funds:** Buyer agrees that all funds Buyer receives that result from the labor, materials, and/or equipment furnished by H&H will be considered "Trust Funds." Buyer will hold all Trust Funds in trust for the sole and exclusive benefit of H&H. Buyer will segregate Trust Funds from other funds. Buyer will account for all Trust Funds and deliver all Trust Funds to H&H. Buyer will not use Trust Funds for any purpose other than paying H&H.

Lay in

Wall mount

Round wall mount

Plaster frame

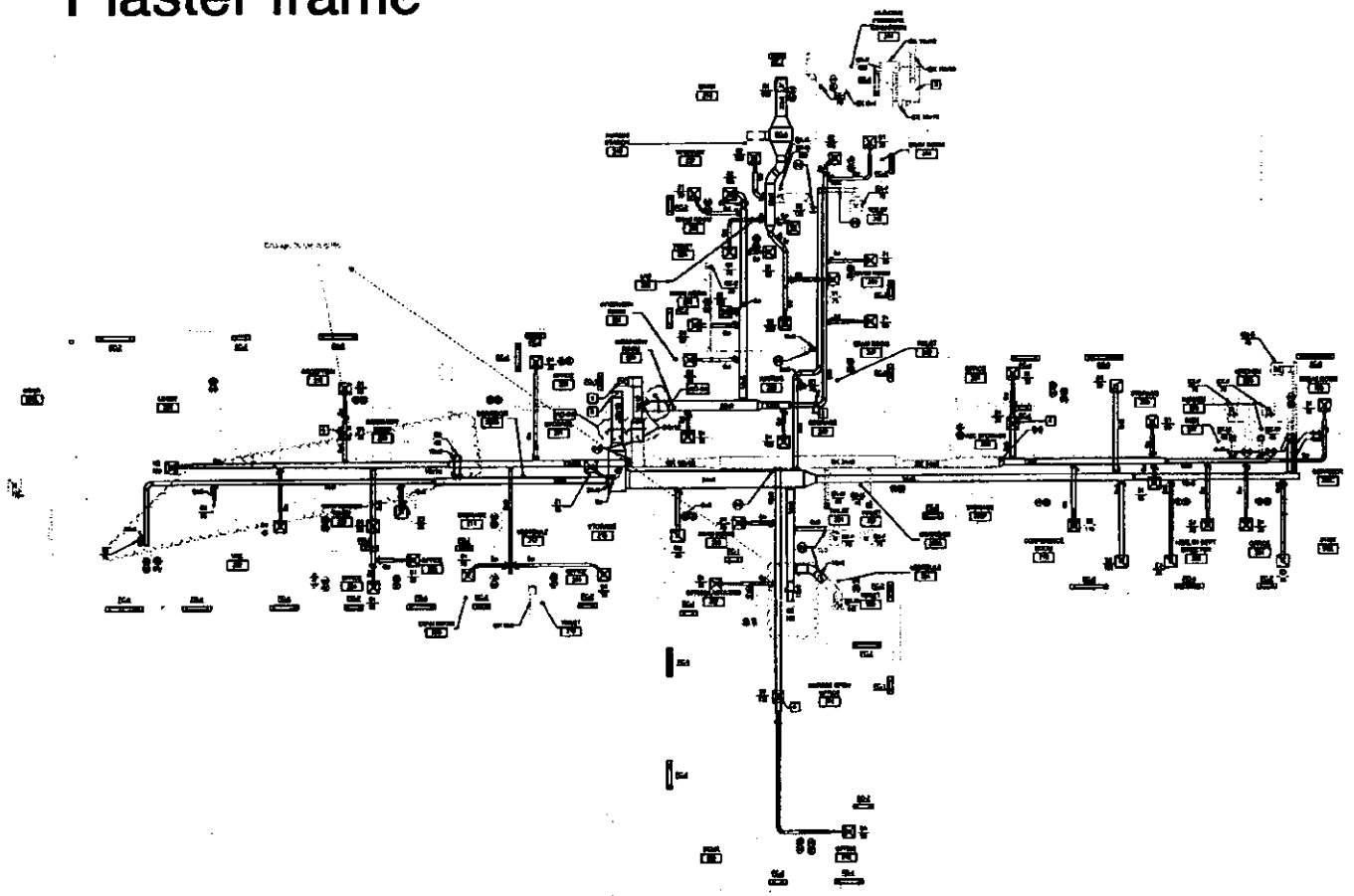

KEYNOTES

N

SECOND FLOOR PLAN - DUCTWORK

MOSELEYARCHITECTS

LEE COUNTY RENOVATIONS

GENERAL NOTES

KEYNOTES

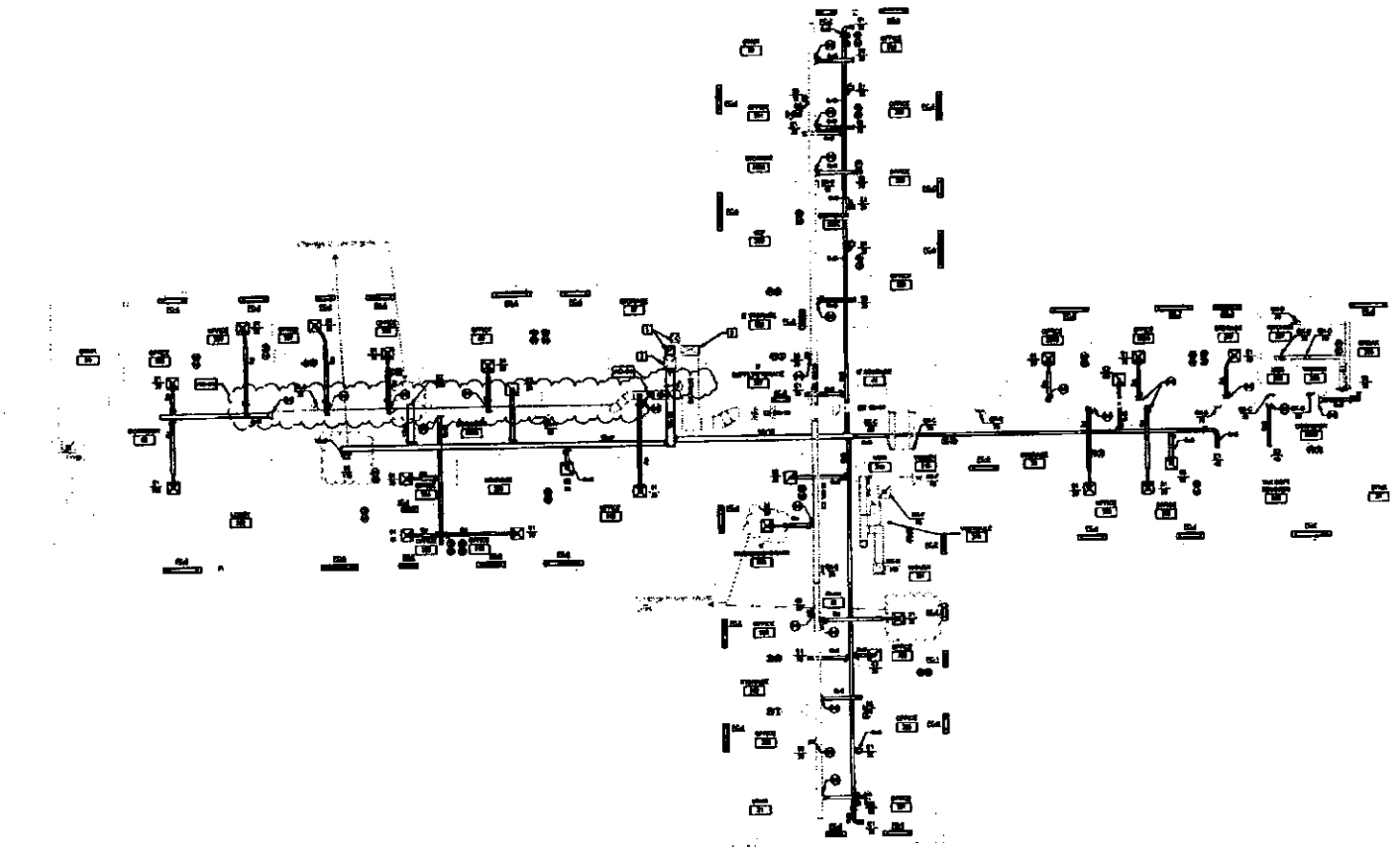

N

THIRD FLOOR PLAN - DUCTWORK

MOSELEYARCHITECTS

LEE COUNTY RENOVATIONS

All plaster frame cut outs will be done by Mechworks, Directive by Bar

KEYNOTES

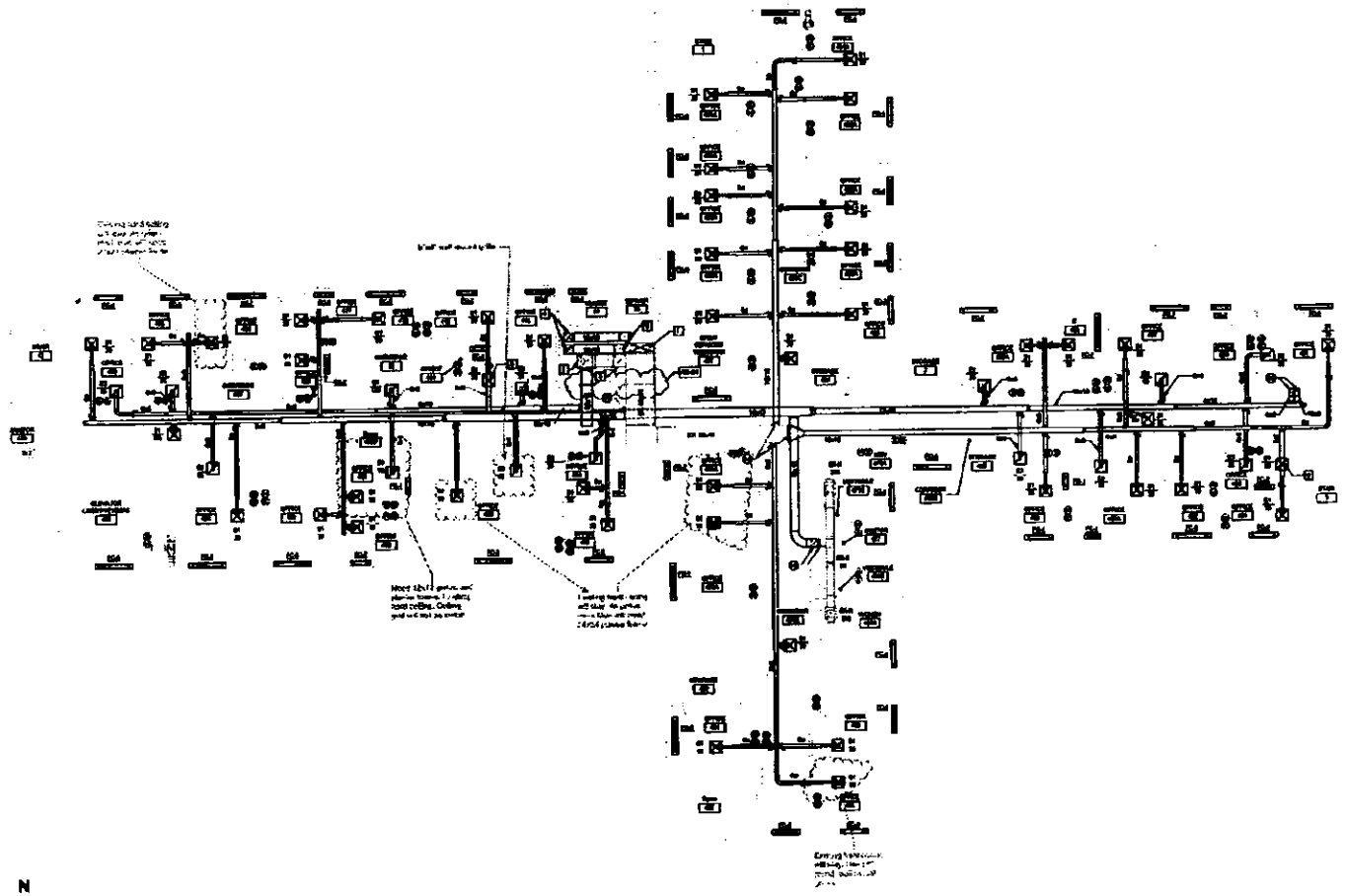

FOURTH FLOOR PLAN - DUCTWORK

MOSELEYARCHITECTS

LEE COUNTY RENOVATIONS

- Lay in
- Wall mount
- Round wall mount
- Plaster frame

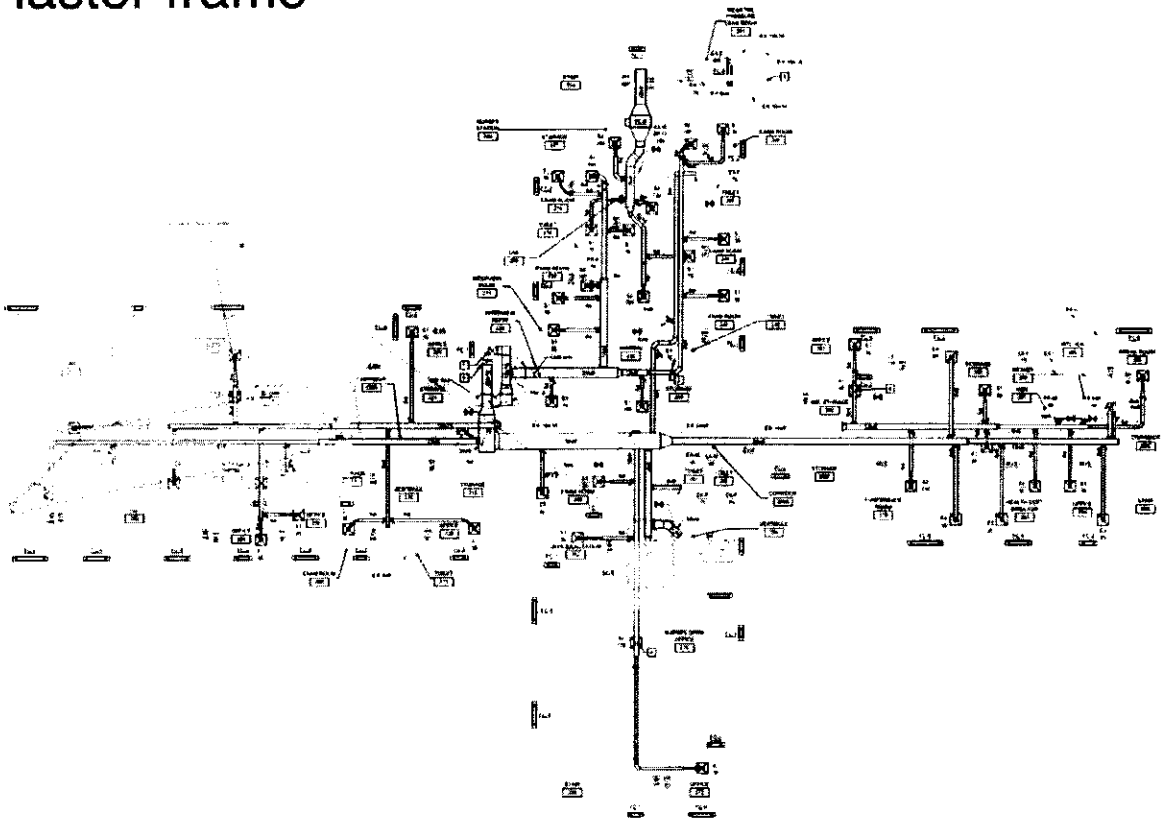

KEYNOTES

N

SECOND FLOOR PLAN - DUCTWORK

MOSELEYARCHITECTS

LEE COUNTY RENOVATIONS

PROJECT #S92384 - VOLUME TWO
COURTS COMPLEX AND GOVERNMENT CENTER
106 HILLCREST DR. SANFORD, NC 27330

SECOND FLOOR PLAN - DUCTWORK

M2.2.1

MOSELEYARCHITECTS
LEE COUNTY RENOVATIONS
PROJECT #S92385 - VOLUME TWO
COURTS COMPLEX AND GOVERNMENT CENTER
106 HILLCREST DR. SANFORD, NC 27330
M2.3.1
THIRD FLOOR PLAN - DUCTWORK
GENERAL NOTES
KEYNOTES
THIRD FLOOR PLAN - DUCTWORK
N

All plaster frame cut outs will be done by Mechworks, Directive by Bar

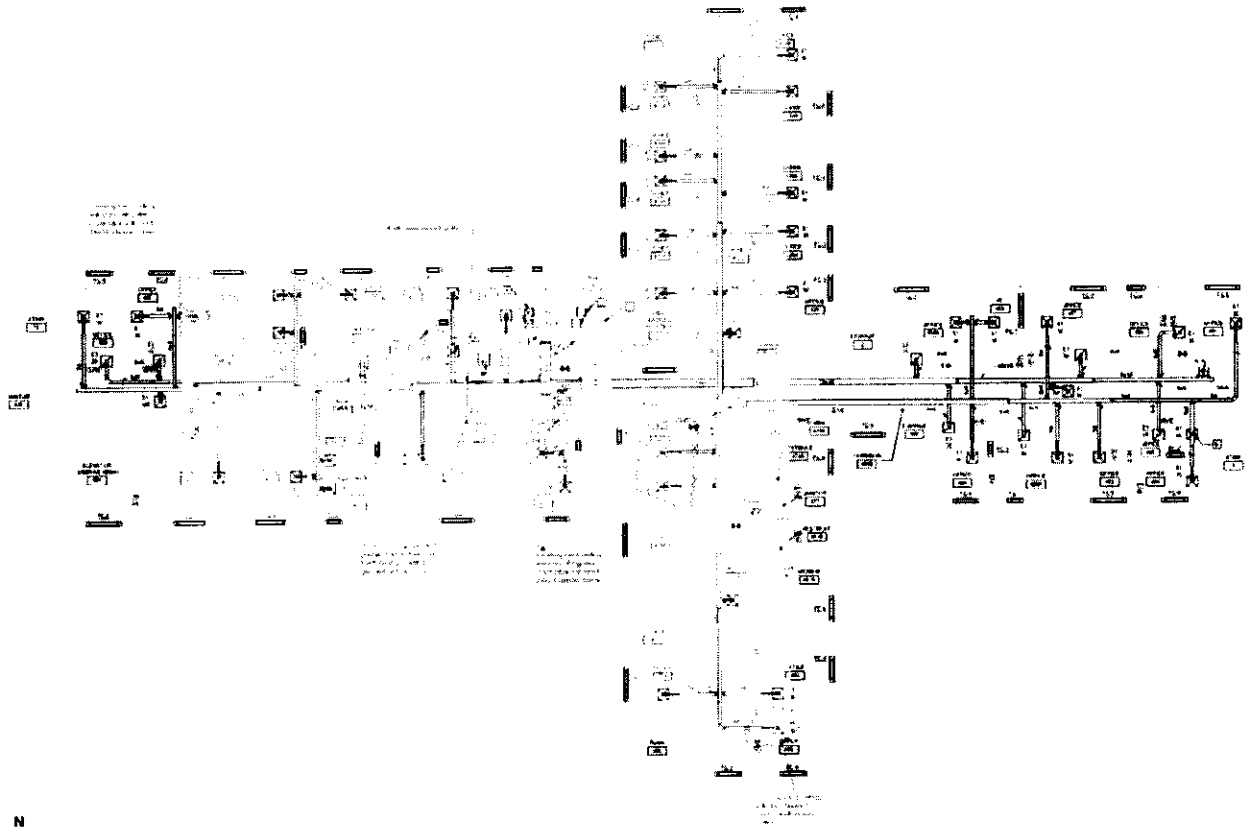

N

FOURTH FLOOR PLAN - DUCTWORK

KEYNOTES

MOSELEYARCHITECTS

LEE COUNTY RENOVATIONS

PROJECT #502385 - VOLUME TWO

COURTS COMPLEX AND GOVERNMENT CENTER

106 HILLCREST DR, SANFORD, NC 27330

FOURTH FLOOR PLAN - DUCTWORK

M2.4.1

BAR CONSTRUCTION COMPANY, INC. ESTABLISHED 1976

611-A INDUSTRIAL AVE. · GREENSBORO, NC 27406 · (336) 274-2477 · FAX (336) 274-8694

January 7, 2022

Mr. Santiago Giraldo
Lee County, North Carolina
408 Summit Drive
Sanford, NC 27331

Project: Lee County Courts and Government Center

COR #: 069 - Plaster Demo for Pipe Re-routing

Gentlemen:

In accordance with the proposed change order request, we have reviewed the cost involved and request a change order of **$18,150.00.**

This proposal is based on work being performed during regular work hours, 8:00 am to 4:30 pm Monday through Friday. No overtime work has been included.

Acceptance of this change order request will add zero (0) days to the contract time.

This change order proposal is firm for thirty days from this date, after which time it is subject to adjustment.

Sincerely,

Vice President

Architect Signature

Owner Signature

Project: Lee County Courts and Government Center

Date: 01/07/2021
Job: 01-20-046
COR#: 069
No. of Days

Description:
Plaster Demo for Pipe Re-routing

Cost Code	Description	Quantity	Unit	Unit Price Mtl	Unit Price Lbr	Material	Labor	Subcontract	Total
						-	-		-
						-	11,550.00	-	11,550.00
						-		-	-
						-	-		-
						-	-		-
						-	-

BAR CONSTRUCTION COMPANY, INC. ESTABLISHED 1976

611-A INDUSTRIAL AVE. · GREENSBORO, NC 27406 · (336) 274-2477 · FAX (336) 274-8694

January 19, 2022

Mr. Santiago Giraldo
Lee County, North Carolina
408 Summit Drive
Sanford, NC 27331

Project: Lee County Courts and Government Center

COR #: 071 – E-stop switches for 3 boilers

Gentlemen:

In accordance with the proposed change order request, we have reviewed the cost involved and request a change order of **$1,768.00.**

This proposal is based on work being performed during regular work hours, 8:00 am to 4:30 pm Monday through Friday. No overtime work has been included.

Acceptance of this change order request will add zero (0) days to the contract time.

This change order proposal is firm for thirty days from this date, after which time it is subject to adjustment.

Sincerely,

Vice President

Architect Signature

Owner Signature

Project: Lee County Courts and Government Center

Description: E-stop switches for boilers

Date: 01/19/2021
Job: 01-20-046
COR#: 071
No. of Days

Cost Code	Description	Quantity	Unit	Unit Price Mtl	Unit Price Lbr	Material	Labor	Subcontract	Total
16-100	**Modern Electrical**					-	-		-
						-	-	1,650.00	1,650.00
						-		-	-
						-	-		-
						-	-		-
						-	-

Modern Electrical

1/20/2022

Lee County Courts Approved Change Orders Detailed Cost

1. Fire Alarm Additional Cost-Courthouse (COR# 067) breakdown:
On east side: 2 additional horn/strobes, 1 strobe, 3 smoke detectors.
On west side: 2 horn/strobes, 1 strobe, two smoke detectors, replacement of 3 existing horn/strobes and rewire to connect to new Mac synch circuit.
Additional power supply panel at west side.
One FCP-24-S8 power supply with batteries, (22)FSP-851IV intelligent photo with base.
3 P2RL Horn/strobes, (9) P2CRL horn/strobes, 6 SRL strobes.....$4,197.20
Programing & Testing.....$975.00
Redrawing zone map.....$550.00
Labor cost.....$3,915.00
Overhead & profit 10%.....$1,070.80
Total Fire Alarm Additional Cost.....$10,708.00

2. Change power to 3 phase circuit at 1st. floor mechanical room (COR#072)
3 Pole breaker, 3/4 raceways, fittings, boxes, supports, wire-nuts.....$455.00
Labor cost.....$400.00
Overhead & Profit 10%.....$ 95.00
Total Change Order Cost.....$950.00

E-Stop switches for 3 boilers (COR#071)
Materials by City Electric.....$680.00
Material from Modern Electrical warehouse.....$355.00
Labor Cost.....$450.00
Overhead & Profit 10%.....$165.00
Total Change Order Cost.....$1,650.00

Combined Approved Changes Total.....$13,308.00

BAR CONSTRUCTION COMPANY, INC. ESTABLISHED 1976

611-A INDUSTRIAL AVE. · GREENSBORO, NC 27406 · (336) 274-2477 · FAX (336) 274-8694

January 25, 2022

Mr. Santiago Giraldo
Lee County, North Carolina
408 Summit Drive
Sanford, NC 27331

Project: Lee County Courts and Government Center

COR #: 072.01 – Change power to 3 phase circuits at 1st floor mechanical room

Gentlemen:

In accordance with the proposed change order request, we have reviewed the cost involved and request a change order of **$1,018.00.**

This proposal is based on work being performed during regular work hours, 8:00 am to 4:30 pm Monday through Friday. No overtime work has been included.

Acceptance of this change order request will add zero (0) days to the contract time.

This change order proposal is firm for thirty days from this date, after which time it is subject to adjustment.

Sincerely,

Vice President

Architect Signature

Owner Signature

Project: Lee County Courts and Government Center

Date: 01/20/2022
Job: 01-20-046
COR#: 072
No. of Days

Description:

Change power to 3 phase circuits at 1st floor mechanical room

Cost Code	Description	Quantity	Unit	Unit Price Mtl	Unit Price Lbr	Material	Labor	Subcontract	Total
						-	-		-
16-100	**Modern Electrical**					-	-	950.00	950.00
						-		-	-
						-	-		-
						-	-		-
						-	-

Modern Electrical

Raleigh, NC · 919.916.5110

BBB

1/20/2022

Lee County Courts Approved Change Orders Detailed Cost

1. Fire Alarm Additional Cost-Courthouse (COR# 067) breakdown:
On east side: 2 additional horn/strobes, 1 strobe, 3 smoke detectors.
On west side: 2 horn/strobes, 1 strobe, two smoke detectors, replacement of 3 existing horn/strobes and rewire to connect to new Mac synch circuit.
Additional power supply panel at west side.
One FCP-24-S8 power supply with batteries, (22)FSP-851IV intelligent photo with base.
3 P2RL Horn/strobes, (9) P2CRL horn/strobes, 6 SRL strobes.....$4,197.20
Programing & Testing.....$975.00
Redrawing zone map.....$550.00
Labor cost.....$3,915.00
Overhead & profit 10%.....$1,070.80
Total Fire Alarm Additional Cost.....$10,708.00

2. Change power to 3 phase circuit at 1st. floor mechanical room (COR#072)
3 Pole breaker, 3/4 raceways, fittings, boxes, supports, wire-nuts.....$455.00
Labor cost.....$400.00
Overhead & Profit 10%.....$ 95.00
Total Change Order Cost.....$950.00

E-Stop switches for 3 boilers (COR#071)
Materials by City Electric.....$680.00
Material from Modern Electrical warehouse.....$355.00
Labor Cost.....$450.00
Overhead & Profit 10%.....$165.00
Total Change Order Cost.....$1,650.00

Combined Approved Changes Total.....$13,308.00

BAR CONSTRUCTION COMPANY, INC. ESTABLISHED 1976

611-A INDUSTRIAL AVE. · GREENSBORO, NC 27406 · (336) 274-2477 · FAX (336) 274-8694

January 19, 2022

Mr. Santiago Giraldo
Lee County, North Carolina
408 Summit Drive
Sanford, NC 27331

Project: Lee County Courts and Government Center

COR #: 073 - Labor portion of the rework of the duct conflicts on the 2nd floor

Gentlemen:

In accordance with the proposed change order request, we have reviewed the cost involved and request a change order of **$1,091.00.**

This proposal is based on work being performed during regular work hours, 8:00 am to 4:30 pm Monday through Friday. No overtime work has been included.

Acceptance of this change order request will add zero (0) days to the contract time.

This change order proposal is firm for thirty days from this date, after which time it is subject to adjustment.

Sincerely,

Vice President

Architect Signature

Owner Signature

Project: Lee County Courts and Government Center

Date: 01/19/2021
Job: 01-20-046
COR#: 073
No. of Days

Description:
Labor portion of the rework of the duct conflicts on the 2nd floor

Cost Code	Description	Quantity	Unit	Unit Price Mtl	Unit Price Lbr	Material	Labor	Subcontract	Total
						-	-		-
	Mechworks Mechanical					-	-	1,018.00	1,018.00
						-		-	-
						-	-		-
						-	-		-
						-	-

MECHWORKS MECHANICAL
CHANGE PROPOSAL FORM

Project:	Lee County Register of Deeds	**Proposal #:**	CO-19
Contract:	HVAC	**Project #:**	2037
Contractor:	Mechworks	**Date:**	1/18/2022

Description of change:
T&M labor portion for the work associated with FC-016 issued by Moseley Architects on 10-7-21.

					SUBTOTALS
Materials	(Attach list with Qty, Item, Unit $, Unit mh, Total mh, OT mh, Total $)				
	1 Total Direct Cost of Materials			$0	
	2 Overhead & Profit on Item 1 (15% maximum)			$0	
	3 Sales Tax			$0	
	4 Shipping & Transportation			$0	$0
Labor					
	5 Total Man-hours:	26 MH @	$27.00 /hr.	$702	
	6 Overhead & Profit on Item 5 (15% maximum)			$105	
	7 Payroll Taxes & Insurance	30.0%		$211	
					$1,018
Equipment Rental	(Include quotes)				
	8 Equipment Rental			$0	
	9 Overhead & Profit on Item 8. (6% maximum)			$0	$0
Subcontractors	(Include quotes with material & equipment backup)				
	10 Subcontractors			$0	
	11 Overhead & Profit on Item 10. (6% maximum)			$0	$0
				Subtotal of Proposal	$1,018
	12 Insurance		0.0%		$0
				TOTAL OF CHANGE PROPOSAL	$1,018

Time Extension Requests: 0 Day(s)

Schedule Activity # Affected:

The Contractor agrees to perform the work outlined in this change proposal for the amount specified above and in accordance with the Contract documents if the work is authorized by the Owner.

Contractor's Signature: _____ **Date:** _____

Approval Recommended by Design Consultant: _____ **Date:** _____

Owner's Representative Approval: _____ **Date:** _____

MECHWORKS MECHANICAL
CHANGE ORDER PROPOSAL

Project:	Lee County Register of Deeds	**Proposal #:**	CO-19
Contract:	HVAC	**Project #:**	2037
Contractor:	Mechworks	**Date:**	1/18/2022

Project Allowed Percentages:

Ovhd and Profit on Materials	15%
Ovhd and Profit on Labor	15%
Payroll Taxes and Insurance	30%
Ovhd and Profit on Equip Rentals	6%
Ovhd and Profit on Subcontractors	6%
Insurance	0%
Tax Rate	7.0%

MATERIALS				
SHEET METAL				$0
PIPING				$0
EQUIPMENT				$0
OTHER				$0
OTHER				$0
CONSUMABLES				$0
TOTAL MAT'S		XXX	XXX	$0
SHIPPING & TRANS.		DAY	RATE	COST
SHIPPING	2 TON DEL. TRK W/FUEL	0	$100	$0
TRANSPORTATION	1/2 PICK-UP W/FUEL	0	$75	$0
TOTAL SHIP & TRANS.		XXX	XXX	$0
LABOR	Enter Rate $27	MH	RATE	COST
UNLOAD		0	$27	$0
DISTRIBUTE		0	$27	$0
INSTALL SHEET METAL MATERIALS		26	$27	$702
INSTALL PIPE MATERIALS		0	$27	$0
SET EQUIPMENT.			$27	$0
BALANCE SYSTEM.		0	$27	$0
COORDINATION WITH OTHER TRADES		0	$27	$0
OTHER		0	$27	$0
OTHER		0	$27	$0
OTHER		0	$27	$0
OTHER		0	$27	$0
TOTAL LABOR		26	XXX	$702
EQUIPMENT RENTALS	(rates per day, 1 day min., except crane)	DAY	RATE	COST
MAN LIFT	(W/FUEL & DELIVERY)	0	$275	$0
SCISSOR LIFT	(W/FUEL & DELIVERY)	0	$275	$0
WELDER	(W/FUEL)	0	$50	$0
300A THREADER	(W/DIES-CUTTER-REAMER)	0	$25	$0
ELECT POWER TOOL	(PORT-A-BAND-ROTOR DRILL-GRINDER)	0	$10	$0
STORAGE TRAILER	(W/DELIVERY)	0	$15	$0
6000LB LULL	(W/FUEL & DELIVERY)	0	$450	$0
PLATE TAMP	(W/FUEL)	0	$150	$0
BACKHOE	(W/FUEL & DELIVERY)	0	$400	$0
MINI EXCAVATOR	(W/FUEL & DELIVERY)	0	$325	$0
CRANE (per hr.)	(4HR MIN.@$400 PER HR.)	0	$400	$0
OTHER		0	$0	$0
TOTAL EQUIPMENT		XXX	XXX	$0
SUBCONTRACTORS		XXX	XXX	XXX
CONTROLS				$0
WIRING		XXX	XXX	$0
INSULATION		XXX	XXX	$0
AIR/WATER BALANCE		XXX	XXX	$0
WELDING	(WELDING BASED @ $60 HR or $500/Day)	0	$500	$0
OTHER		XXX	XXX	$0
TOTAL SUB		XXX	XXX	$0

MECHWORKS

Job Name: Lee County Register of Deeds $ - $ - Labor Rate $ 27.00
Date: 1/18/2022 $ -

QTY	MATERIAL	UNIT COST	TOTAL COST	LABOR UNITS	TOTAL UNITS	TOTAL LABOR
	Sheet Metal Materials					
1	duct install	$ -	$ -	26.00	26.00	$ 702.00
		$ -	$ -	0.00	0.00	$ -
		$ -	$ -	0.00	0.00	$ -
		$ -	$ -	0.00	0.00	$ -
		$ -	$ -	0.00	0.00	$ -
		$ -	$ -	0.00	0.00	$ -
		$ -	$ -	0.00	0.00	$ -
		$ -	$ -	0.00	0.00	$ -
		$ -	$ -	0.00	0.00	$ -
		$ -	$ -	0.00	0.00	$ -
		$ -	$ -	0.00	0.00	$ -
		$ -	$ -	0.00	0.00	$ -
		$ -	$ -	0.00	0.00	$ -
		$ -	$ -	0.00	0.00	$ -
		$ -	$ -	0.00	0.00	$ -
	Sub Total Sheet Metal Materials		$ -		26.00	$ 702.00

	Piping Materials					
		$ -	$ -	0.00	0.00	$ -
		$ -	$ -	0.00	0.00	$ -
		$ -	$ -	0.00	0.00	$ -
		$ -	$ -	0.00	0.00	$ -
		$ -	$ -	0.00	0.00	$ -
		$ -	$ -	0.00	0.00	$ -
		$ -	$ -	0.00	0.00	$ -
		$ -	$ -	0.00	0.00	$ -
		$ -	$ -	0.00	0.00	$ -
		$ -	$ -	0.00	0.00	$ -
		$ -	$ -	0.00	0.00	$ -
		$ -	$ -	0.00	0.00	$ -
		$ -	$ -	0.00	0.00	$ -
		$ -	$ -	0.00	0.00	$ -
	Sub Total Piping Materials		$ -		0.00	$ -

	Equipment					
			$ -	1.00	0.00	$ -
		$ -	$ -	0.00	0.00	$ -
		$ -	$ -	0.00	0.00	$ -
		$ -	$ -	0.00	0.00	$ -
		$ -	$ -	0.00	0.00	$ -
		$ -	$ -	0.00	0.00	$ -
		$ -	$ -	0.00	0.00	$ -
		$ -	$ -	0.00	0.00	$ -
		$ -	$ -	0.00	0.00	$ -
		$ -	$ -	0.00	0.00	$ -
		$ -	$ -	0.00	0.00	$ -
		$ -	$ -	0.00	0.00	$ -
	Sub Total Equipment		$ -		0.00	$ -

Total Material & Labor Hours and Cost	$ -		100	$ 702.00

Shipping and Receiving Costs	$ -

MECHWORKS
MECHANICAL CONTRACTORS, INC.

TIME AND MATERIALS WORK ORDER AUTHORIZATION FORM

Date: 1/3/22
Project: Lee Co.
Address:

Description of work: 2nd floor 3rd phace rework supply 22x8 / return 14x8

NAME	POSTION	HOURS
Adan Camacho	Mechanic	5
Daniel Sosa	Helper	5
	TOTAL	10

QUANTITY	MATERIAL AND DESCRIPTION OF WORK
	Duct seal
	5/16 screws
	Hanger strap
	Anchors

Approved By: [signature]
Title:
Company: BAR
Date: 1/6/22

East Division / Corporate Office
102-A Professional Park Drive P.O. Box 427
Beaufort NC 28516 (252) 504-1201

Triangle Office
3200 Glen Royal Rd. Suite 100
Raleigh, NC 27617 (919)322-2090

West Office
2904 Manufacturers Road
Greensboro NC 27406 (336) 333-2535

www.mechworksinc.com

Scanned with CamScanner

MECHWORKS
MECHANICAL CONTRACTORS, INC.

TIME AND MATERIALS WORK ORDER AUTHORIZATION FORM

Date: 12/29/2021
Project: Lee Co.
Address:

Description of work: 2nd floor 3rd phace rework supply 22x8 / return 14x8

NAME	POSTION	HOURS
Adan Camacho	Mechanic	8
Daniel Sosa	Helper	8
	TOTAL	16

QUANTITY	MATERIAL AND DESCRIPTION OF WORK
	Duct seal
	5/16 screws
	Hanger strap
	Anchors

Approved By: Rick Leon
Title:
Company: BAR
Date: 1/6/22

East Division / Corporate Office
102-A Professional Park Drive P.O. Box 427
Beaufort NC 28516 (252) 504-3201

Triangle Office
3200 Glen Royal Rd. Suite 100
Raleigh, NC 27617 (919)322-2090

West Office
2904 Manufacturers Road
Greensboro NC 27406 (336) 333-2535

www.mechworksinc.com

Scanned with CamScanner

MOSELEYARCHITECTS FIELD CLARIFICATION

Project:	Lee Co. Courts Complex and Government Bldg.	FC Number:	016
To:	BAR Construction Company, Inc. 611A Industrial Ave Greensboro, NC 27406	Date:	October 7, 2021
		Project No.:	592385
Attn:	Greg Tillman	Drawing No.:	M1.2, M2.2.1
Subject:	Govt. Center – 2nd Flr Duct Routing & Fan Coil Fan Operation Revisions	Specification No.:	230993

You are hereby directed to executive promptly this Field Clarification, which interprets the Contract Documents or orders minor changes in the Work without change in the Contract Sum or Contract Time.

If you consider that a change in Contract Sum or Contract Time is required, please submit your itemized claim to the Architect immediately and before proceeding with this Work. If your claim is found to be justified and in proper order, this Field Clarification will be incorporated into a Change Order.

Description:

Reference the attached drawings M1.2, M2.2.1 and specifications section 230993 and incorporate into the Contract Documents. These sheets and specifications supersede previously issued sheets and specifications of the same name.

Summary of Changes are as follows:

Sheet M1.2:

- Updated existing ductwork sizes based on field information provided by the contractor.

Sheet M2.2.1:

- Revised ductwork routing and sizes to coordinate with field conditions based upon contractor's suggestion in RFI-027.

Section 230993:

- Revised 2.9B-1 as follows: The BAS shall cycle the fan on and off as required to maintain temperature set point.

Attachments: ☒ Drawing ☐ Specification ☐ Memo ☐ Letter

COPIES TO:	w/ Enclosures
Owner	☒
	☐
	☐
	☐
592385 · Name · C3 FC-016	☒

BY: Paul Luzier
Construction Services Division

MWW31 (rev 2/14/2002)

KEYNOTES

SECOND FLOOR DEMOLITION PLAN

SECOND FLOOR PLAN - DUCTWORK

BAR CONSTRUCTION COMPANY, INC. ESTABLISHED 1976

611-A INDUSTRIAL AVE. · GREENSBORO, NC 27406 · (336) 274-2477 · FAX (336) 274-8694

January 24, 2022

Mr. Santiago Giraldo
Lee County, North Carolina
408 Summit Drive
Sanford, NC 27331

Project: Lee County Courts and Government Center

COR #: 075 - Smoke seal additional openings phase 3

Gentlemen:

In accordance with the proposed change order request, we have reviewed the cost involved and request a change order of **$467.00.**

This proposal is based on work being performed during regular work hours, 8:00 am to 4:30 pm Monday through Friday. No overtime work has been included.

Acceptance of this change order request will add one (1) day to the contract time.

This change order proposal is firm for thirty days from this date, after which time it is subject to adjustment.

Sincerely,

Vice President

Architect Signature

Owner Signature

Project: Lee County Courts and Government Center

Description: Smoke seal additional openings phase 3

Date: 01/24/2022
Job: 01-20-046
COR#: 075
No. of Days

Cost Code	Description	Quantity	Unit	Unit Price Mtl	Unit Price Lbr	Material	Labor	Subcontract	Total
						-	-		-
	Mechworks Mechanical					-	-	436.00	436.00
						-		-	-
						-	-		-
						-	-		-
						-	-

MECHWORKS MECHANICAL
CHANGE PROPOSAL FORM

Project:	Lee County Register of Deeds	**Proposal #:**	CO-21
Contract:	HVAC	**Project #:**	2037
Contractor:	Mechworks	**Date:**	1/24/2022

Description of change:
Smoke seal an additional (5) blank floor openings in phase 3. These openings were not able to be identifited at the time we priced smoke sealing phases 1 and 2 because the owner was still occupying phase 3.

					SUBTOTALS
Materials	(Attach list with Qty, Item, Unit $, Unit mh, Total mh, OT mh, Total $)				
	1 Total Direct Cost of Materials			$0	
	2 Overhead & Profit on Item 1 (15% maximum)			$0	
	3 Sales Tax			$0	
	4 Shipping & Transportation			$0	$0
Labor					
	5 Total Man-hours:	2.5 MH @	$27.00 /hr.	$68	
	6 Overhead & Profit on Item 5 (15% maximum)			$10	
	7 Payroll Taxes & Insurance	30.0%		$20	$98
Equipment Rental	(Include quotes)				
	8 Equipment Rental			$0	
	9 Overhead & Profit on Item 8. (6% maximum)			$0	$0
Subcontractors	(Include quotes with material & equipment backup)				
	10 Subcontractors			$315	
	11 Overhead & Profit on Item 10. (6% maximum)			$19	$334
				Subtotal of Proposal	$432
	12 Insurance		1.0%		$4
				TOTAL OF CHANGE PROPOSAL	$436

Time Extension Requests: 1 Day(s)

Schedule Activity # Affected:

The Contractor agrees to perform the work outlined in this change proposal for the amount specified above and in accordance with the Contract documents if the work is authorized by the Owner.

Contractor's Signature: _____ **Date:** _____

Approval Recommended by Design Consultant: _____ **Date:** _____

Owner's Representative Approval: _____ **Date:** _____

MECHWORKS MECHANICAL
CHANGE ORDER PROPOSAL

Project: Lee County Register of Deeds
Contract: HVAC
Contractor: Mechworks

Proposal #: CO-21
Project #: 2037
Date: 10/25/2021

Project Allowed Percentages:

Ovhd and Profit on Materials	15%
Ovhd and Profit on Labor	15%
Payroll Taxes and Insurance	30%
Ovhd and Profit on Equip Rentals	6%
Ovhd and Profit on Subcontractors	6%
Insurance	0%
Tax Rate	7.0%

MATERIALS				
SHEET METAL				$0
PIPING				$0
EQUIPMENT				$0
OTHER				$0
OTHER				$0
CONSUMABLES				$0
TOTAL MAT'S		XXX	XXX	$0
SHIPPING & TRANS.		DAY	RATE	COST
SHIPPING	2 TON DEL. TRK W/FUEL	0	$100	$0
TRANSPORTATION	1/2 PICK-UP W/FUEL	0	$75	$0
TOTAL SHIP & TRANS.		XXX	XXX	$0
LABOR	Enter Rate $27	MH	RATE	COST
UNLOAD		0	$27	$0
DISTRIBUTE		0	$27	$0
INSTALL SHEET METAL MATERIALS		0	$27	$0
INSTALL PIPE MATERIALS		0	$27	$0
SET EQUIPMENT.		2.5	$27	$68
BALANCE SYSTEM.		0	$27	$0
COORDINATION WITH OTHER TRADES		0	$27	$0
OTHER		0	$27	$0
OTHER		0	$27	$0
OTHER		0	$27	$0
OTHER		0	$27	$0
TOTAL LABOR		2.5	XXX	$68
EQUIPMENT RENTALS	(rates per day, 1 day min., except crane)	DAY	RATE	COST
MAN LIFT	(W/FUEL & DELIVERY)	0	$275	$0
SCISSOR LIFT	(W/FUEL & DELIVERY)	0	$275	$0
WELDER	(W/FUEL)	0	$50	$0
300A THREADER	(W/DIES-CUTTER-REAMER)	0	$25	$0
ELECT POWER TOOL	(PORT-A-BAND-ROTOR DRILL-GRINDER)	0	$10	$0
STORAGE TRAILER	(W/DELIVERY)	0	$15	$0
6000LB LULL	(W/FUEL & DELIVERY)	0	$450	$0
PLATE TAMP	(W/FUEL)	0	$150	$0
BACKHOE	(W/FUEL & DELIVERY)	0	$400	$0
MINI EXCAVATOR	(W/FUEL & DELIVERY)	0	$325	$0
CRANE (per hr.)	(4HR MIN.@$400 PER HR.)	0	$400	$0
OTHER		0	$0	$0
TOTAL EQUIPMENT .		XXX	XXX	$0
SUBCONTRACTORS		XXX	XXX	XXX
CONTROLS		XXX	XXX	$0
WIRING		XXX	XXX	$0
INSULATION		XXX	XXX	$0
AIR/WATER BALANCE		XXX	XXX	$0
WELDING	(WELDING BASED @ $60 HR or $500/Day)	0	$500	$0
Fire Stop Smoke Seal Sub		XXX	XXX	$315
TOTAL SUB.		XXX	XXX	$315

MECHWORKS

Job Name: Lee County Register of Deeds $ - $ - Labor Rate $ 27.00
Date: 10/25/2021 $ -

QTY	MATERIAL	UNIT COST	TOTAL COST	LABOR UNITS	TOTAL UNITS	TOTAL LABOR
	Sheet Metal Materials					
		$ -	$ -	0.00	0.00	$ -
		$ -	$ -	0.00	0.00	$ -
		$ -	$ -	0.00	0.00	$ -
		$ -	$ -	0.00	0.00	$ -
		$ -	$ -	0.00	0.00	$ -
		$ -	$ -	0.00	0.00	$ -
		$ -	$ -	0.00	0.00	$ -
		$ -	$ -	0.00	0.00	$ -
		$ -	$ -	0.00	0.00	$ -
		$ -	$ -	0.00	0.00	$ -
		$ -	$ -	0.00	0.00	$ -
		$ -	$ -	0.00	0.00	$ -
		$ -	$ -	0.00	0.00	$ -
		$ -	$ -	0.00	0.00	$ -
	Sub Total Sheet Metal Materials		$ -		0.00	$ -
	Piping Materials					
		$ -	$ -	0.00	0.00	$ -
		$ -	$ -	0.00	0.00	$ -
		$ -	$ -	0.00	0.00	$ -
		$ -	$ -	0.00	0.00	$ -
		$ -	$ -	0.00	0.00	$ -
		$ -	$ -	0.00	0.00	$ -
		$ -	$ -	0.00	0.00	$ -
		$ -	$ -	0.00	0.00	$ -
		$ -	$ -	0.00	0.00	$ -
		$ -	$ -	0.00	0.00	$ -
		$ -	$ -	0.00	0.00	$ -
		$ -	$ -	0.00	0.00	$ -
		$ -	$ -	0.00	0.00	$ -
		$ -	$ -	0.00	0.00	$ -
	Sub Total Piping Materials		$ -		0.00	$ -
	Equipment					
5	remove/relpace FCU panels	$ -	$ -	0.50	2.50	$ 67.50
		$ -	$ -	0.00	0.00	$ -
		$ -	$ -	0.00	0.00	$ -
		$ -	$ -	0.00	0.00	$ -
		$ -	$ -	0.00	0.00	$ -
		$ -	$ -	0.00	0.00	$ -
		$ -	$ -	0.00	0.00	$ -
		$ -	$ -	0.00	0.00	$ -
		$ -	$ -	0.00	0.00	$ -
		$ -	$ -	0.00	0.00	$ -
		$ -	$ -	0.00	0.00	$ -
		$ -	$ -	0.00	0.00	$ -
	Sub Total Equipment		$ -		2.50	$ 67.50

Total Material & Labor Hours and Cost	$ -		2.50	$ 68.00

Shipping and Receiving Costs	$ -

Specialty Construction Services, Inc.	President: Jeff Compton Cell: (919) 621-9337 Phone: (919) 550-4131 1828 Lancaster Drive Garner, NC 27529	Proposal NFPA January 24, 2022

SUBMITTED TO: Mechworks Mechanical Contractor, Inc.
3200 Glen Royal Road, Suite100
Raleigh, NC 27617
Attn: Shaun Hathaway

PROJECT: Lee County Government Center
LOCATION: 106 Hillcrest Drive
Sanford, NC 27330

DESCRIPTION: **CO#1: Phase 3-Additional Floor Blank Openings**

Smoke-seal an additional (4) 6" and (1) 4" floor blank openings using mineral wool and Hilti CP506 Smoke & Sound Sealant, per EJ# 537317a.

Labor: 3 @ 50.00: 150.00

(6) 20 oz. tubes of Hilti CP506 & misc. mineral wool (cost plus 15% mark-up and sales tax: 105.00

Truck charge (partial charge): 60.00

Total: $315.00

Notes and Exclusions:

1. Mechworks is responsible for providing removal/re-installation of HVAC unit cover panels.
2. SCS accepts no responsibility for any other firestopping or smoke-sealing on this project other than what is installed by SCS.

Jeff Compton, President
HILTI Firestop Specialty Contractor

AN

ENGINEERING JUDGMENT FIRESTOP DETAIL

PROJECT : LEE COUNTY BUILDING
CONTRACTOR : SCS FIRESTOP

CROSS-SECTIONAL VIEW

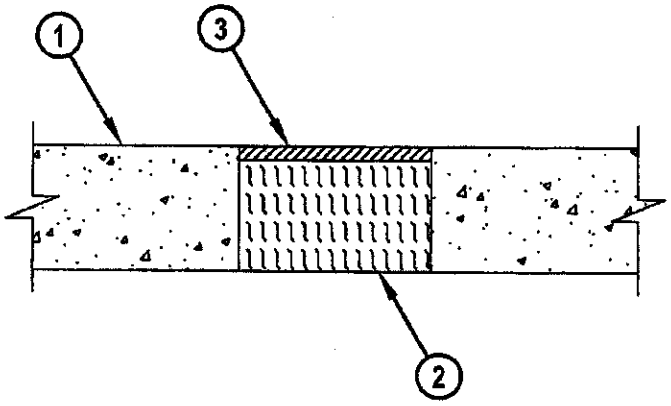

1. CONCRETE FLOOR ASSEMBLY (MINIMUM 4-1/2" THICK) (FIRE-RATED OR NON FIRE-RATED).
2. MINIMUM 4" THICKNESS MINERAL WOOL (MIN. 4 PCF DENSITY) TIGHTLY PACKED AND RECESSED TO ACCOMMODATE SEALANT.
3. MINIMUM 1/2" DEPTH HILTI CP 506 SMOKE AND ACOUSTIC SEALANT.

NOTES : 1. MAXIMUM DIAMETER OF OPENING = 7".
2. THIS SYSTEM IS DESIGNED AS A COLD SMOKE SEAL ONLY.

THIS ENGINEERING JUDGMENT REPRESENTS A FIRESTOP SYSTEM THAT WOULD BE EXPECTED TO PASS THE STATED RATINGS IF TESTED.
(REFERENCE : UL/cUL SYSTEM NO. C-AJ-0070)

HILTI Hilti Firestop Systems	HILTI, Inc. Plano, Texas USA (800) 879-8000 Designed by	Sheet 1 of 1 Scale 5/32" = 1" Date Oct. 27, 2021	Drawing No. 537317a

Saving Lives through Innovation and Education

BAR CONSTRUCTION COMPANY, INC. ESTABLISHED 1976

611-A INDUSTRIAL AVE. · GREENSBORO, NC 27406 · (336) 274-2477 · FAX (336) 274-8694

January 26, 2022

Mr. Santiago Giraldo
Lee County, North Carolina
408 Summit Drive
Sanford, NC 27331

Project: Lee County Courts and Government Center

COR #: 077.01 - Install LVT to the Governmental Center

Gentlemen:

In accordance with the proposed change order request, we have reviewed the cost involved and request a change order of **$92,289.00.**

This proposal is based on work being performed during regular work hours, 8:00 am to 4:30 pm Monday through Friday. No overtime work has been included.

Acceptance of this change order request will add zero (0) day to the contract time.

This change order proposal is firm for thirty days from this date, after which time it is subject to adjustment.

Sincerely,

Vice President

Architect Signature

Owner Signature

Project: Lee County Courts and Government Center

Description: Install LVT to the Governmental Center

Date: 01/26/2022
Job: 01-20-046
COR#: 077
No. of Days

Cost Code	Description	Quantity	Unit	Unit Price Mtl	Unit Price Lbr	Material	Labor	Subcontract	Total
						-	-		-
	Right Touch Interiors					-	-	-	-
	2nd Floor					-		54,500.00	54,500.00
	3rd Floor					-	-	26,227.00	26,227.00
						-	-		-
						-	-		-
						-	-		-

Right Touch Interiors

CELEBRATING 25 YEARS OF EXCELLENCE

807 Post St.
Greensboro, NC 27405
Phone 336-378-0033
www.righttouchinteriors.com

Attention: GREG TILLMAN
Manager: GREG GORDON
Estimator:
Admin:
Time: 7:23 AM
Revision #:

Proposal

53365

Date: 1/26/2022
Plan Date:
Bid Due Date: 1/26/2022
Addendums Read:

BAR CONSTRUCTION COMPANY, INC.
611-A INDUSTRIAL AVENUE
GREENSBORO, NC 27406

GREG TILLMAN
Phone: (336) 274-2477
Cell: (336) 453-5368
Fax: (336) 274-8694

Project

LEE COUNTY GOVERNMENT CENTER
, NC

Phone:
Cell:
Pager:
Fax:

Phone:
Cell:
Pager:
Fax:

2ND FLOOR

Line No.	Manufacturer / Style	Color Name / Color Number
1	**VT-A1 - VIYNL TILE SUPPLIED AND INSTALLED - ** 20 MIL PRODUCT PRICING ****	
	SHAW HARDSURFACES	TBD
	TERRAIN II 0454V 6"X48" 20 MIL	
2	**RB RUBBER BASE SUPPLIED AND INSTALLED -**	
	JOHNSONITE®	TBD
	WALL BASE (CB-XX)-VINYL 6" GROUP 3	TBD
3	**DEMO EXISTING -**	
	RIGHT TOUCH INTERIORS, LLC.	VCT
	DEMO	
4	**FLOOR PREP -**	
	RIGHT TOUCH INTERIORS, LLC.	MINOR FLOOR PREP
	FLOOR PREP	

TOTAL (APPLICABLE TAX INCLUDED) **$54,500.00**

3RD FLOOR

Line No.	Manufacturer / Style	Color Name / Color Number
1	**VT-A1 - VIYNL TILE SUPPLIED AND INSTALLED - ** 20 MIL PRODUCT PRICING ****	
	SHAW HARDSURFACES	TBD
	TERRAIN II 0454V 6"X48" 20 MIL	
2	**RB RUBBER BASE SUPPLIED AND INSTALLED -**	
	JOHNSONITE®	TBD
	WALL BASE (CB-XX)-VINYL 6" GROUP 3	TBD
3	**DEMO EXISTING -**	
	RIGHT TOUCH INTERIORS, LLC.	VCT
	DEMO	
4	**FLOOR PREP -**	
	RIGHT TOUCH INTERIORS, LLC.	MINOR FLOOR PREP
	FLOOR PREP	

TOTAL (APPLICABLE TAX INCLUDED) **$26,227.00**

Right Touch Interiors, LLC. will furnish, deliver, and install the above material in accordance with all transmitted plans, specifications and general conditions for the listed price. The price includes all applicable freight and taxes, unless otherwise noted. Unless specifically included in this proposal: excludes all demolition, repair or take-up of existing flooring; excludes vacuuming, damp mopping, buffing, waxing or floor protection; excludes floor floating, leveling or repair; excludes sealing of floor, cleaning or removal of oil, grease, solvents, paints, plaster or other foreign substances; excludes asbestos control/abatement; includes no attic stock of material beyond installation coverage; includes work only during regular hours and for a single phase job; excludes any furniture movement; excludes any addenda beyond the base bid; Per CRI-104-96, 6.3 site conditions: **The owner or general contractor must submit to the flooring contractor a written report on moisture and surface alkalinity of the slab to determine its suitability as a substrate for the material to be installed.** Floor preparation will be billed on a time and material basis at $50.00 per man-hour plus the cost of the materials. Client is subject to payment for stored materials. Right Touch Interiors, LLC. will not accept charge backs of damage or cleaning without the option to inspect claim(s) to repair or without the option to make arrangements for acceptable repairs at their expense. Right Touch Interiors, LLC. is not responsible for any claims that might result from product delivery date changes beyond their control. If a manufacturer requires a deposit to manufacture/ship certain items, client will pay that amount. Full payment is due ten (10) days from receipt of invoice unless otherwise specified. ***Right Touch Interiors, LLC strives to keep its prices as low as possible, therefore all quotes given are "Cash Price" and payment for all invoices is to be made via cash, check or money order only. Credit cards can be accepted, but the additional fees associated with making credit card payments can be up to 5% of the final invoice amount, depending on type of credit card used. See sales rep for more details. Thank you in advance for your understanding!***

DUE TO CURRENT MATERIAL SHORTAGES AND CONSTANTLY CHANGING PRICES, THIS PROPOSAL IS ONLY VALID FOR FIFTEEN (15) DAYS

RIGHT TOUCH

Signed: _____

GREG GORDON

_____

BAR CONSTRUCTION COMPANY, INC.

Signed: _____

Proposed Installation Start Date: _____

ITEM #: VI.A

LEE COUNTY AGENDA ABSTRACT
BOARD OF COMMISSIONERS - REGULAR

MEETING DATE: February 21, 2022

SUBJECT: County Managers Monthly Report for February 2022

DEPARTMENT: Administration

CONTACT PERSON: Jennifer Gamble, Deputy County Attorney/Clerk to the Board of Commissioners

TYPE: Information

REQUEST	County Manager John Crumpton will provide a monthly report for February 2022.
BUDGET IMPACT	None
ATTACHMENTS	County_Managers_Monthly_Report_Feb_21_2021.docx MONTHLY REPORT JANUARY 2022.pdf February TRC Agenda [02.02.22].pdf 2022 FEB_Library_Director_Report.pdf Monthly Tax Collection Managers Report January 2022.docx Parks and Rec Commission 1.24.22 Agenda.pdf
PRIOR BOARD ACTION	N/A
RECOMMENDATION	Information

SUMMARY

County Manager John Crumpton will provide a monthly report with updates regarding department activities, projects and county events.

County Manager's Interim Report – February 21, 2022

Ongoing Projects

Magnetti Marelli - CCCC – Five Commissioners and Eight CCCC Board of Trustee Members took part in the walking tours of the buildings at the Magnetti Marelli facility. After this report the facility will be named the E. Eugene Moore Manufacturing and Bio-Tech Solutions Center or the Moore Center for short. Overall, it appeared that everyone was impressed with the condition of the facility. Our environmental engineers, Terrquest completed soil sampling at the site on Friday, February 11. So far, the testing has gone well. Results from the tests should be completed in two to three weeks. After this, the engineer will be developing the plan for remediation and seek approval from NCDEQ. We will keep the Board up to date on progress.

Parks and Rec Projects – No update at this time.

Courthouse – Government Center Projects – The main courthouse project is nearing completion. The judge's chambers, jury room, grand jury room and magistrate's courtroom remain to be completed. These areas should be completed by March 1. Work continues in the Government Center. We anticipate 90 days before completion.

Parking Lot Projects – All projects are complete except the security gates at the courthouse and lights at the Douglas Drive – COLTS parking lot. On both projects the items have been ordered. We are waiting on delivery. We anticipate completing these projects in the next 30 to 60 days.

Other Items

COVID-19 Update – Daily new cases have dropped from over 200 per day to less than 50 per day over the last 3 weeks. Our positivity rate is around 21 percent, down from 38 percent 3 weeks ago. We are expecting these numbers to continue to improve over the next couple of weeks.

Reports

Tax – January 2021 Monthly Tax Collection Report

Community Development – Technical Review Committee Agenda – 02-02-2022

Building Inspections – Monthly Building Report – January 2021.

Parks and Recreation – The Parks and Recreation Advisory Board Agenda for their January 24, 2022 meeting is attached.

Library Board of Trustees did not meet in January or February. The Library Director's report for February is attached.

Upcoming Meetings/Events:

February 24 – SAGA All Boards Meeting – Civic Center – 5:30 pm.

March 7 – Monthly Commissioners Meeting – McSwain Center – 6:00 pm.

March 21 – Monthly Commissioners Meeting – Civic Center – 6:00 pm.

PERMITS ISSUED BY TYPE (01/03/2022 TO 01/31/2022)
FOR CITY OF SANFORD/LEE COUNTY/ BROADWAY

BUILDING (NON-RESIDENTIAL)

BLDC-011689-2021 **Type:** Building (Non-Residential) **District:** Sanford **Main Address:** 3215 Keller-Andrews Rd
Status: Issued **Workclass:** Addition **Project:** LIFE SPRINGS CHURCH EXPANSION **Parcel:** 9632-92-5021-00 Sanford, NC 27330
Application Date: 10/14/2021 **Issue Date:** 01/26/2022 **Expiration:** 07/25/2022 **Last Inspection:** **Finaled Date:**
Zone: R-12 R-12 Residential Mixed **Sq Ft:** 14,682 **Valuation:** $3,364,700.00 **Assigned To:** Samantha Miller
Additional Info:
Number of Stories: 2 **Corner Lot:** No **Assembly:** 14862 **Private Sewer:** No **Public Sewer:** Yes
Private Well: No **Public Water:** Yes **Reactivated:** No **Fire Plan Review Required:** Yes **Construction Type:** III-B
Subdivision: **Acres:** 8.45 **Power Co.:** DUKE
Description: ADDITION TO EXISTING CHURCH

BLDC-012132-2021 **Type:** Building (Non-Residential) **District:** Lee County (Unincorporated) **Main Address:** 4300 Oak Park Rd
Status: Issued **Workclass:** Alteration **Project:** **Parcel:** 9645-72-5175-00 Sanford, NC 27330
Application Date: 11/15/2021 **Issue Date:** 01/18/2022 **Expiration:** 07/17/2022 **Last Inspection:** **Finaled Date:**
Zone: LI LI Light Industrial **Sq Ft:** 0 **Valuation:** $5,102,200.00 **Assigned To:**
Additional Info:
Corner Lot: No **Private Sewer:** No **Public Sewer:** Yes **Private Well:** No **Public Water:** Yes
Reactivated: No **Fire Plan Review Required:** No **Construction Type:** V-A **Flood Zone:** AEFW, SHADED X, SHADED X, AE, SHADED X, SHADED X, **Subdivision:**
Acres: 107.124 **Power Co.:** DUKE
Description: INTERIOR RENOVATIONS TO MSAT LAB IN BUILDING 118

BLDC-012239-2021 **Type:** Building (Non-Residential) **District:** Sanford **Main Address:** 946 N Horner Blvd
Status: Issued **Workclass:** Accessory Structure **Project:** **Parcel:** 9643-34-3231-00 Sanford, NC 27330
Application Date: 11/24/2021 **Issue Date:** 01/04/2022 **Expiration:** 07/03/2022 **Last Inspection:** **Finaled Date:**
Zone: C-2 C-2 General Commercial **Sq Ft:** 4,380 **Valuation:** $140,000.00 **Assigned To:**
Additional Info:
Number of Stories: 1 **Corner Lot:** No **Business:** 0 **Private Sewer:** No **Public Sewer:** Yes
Private Well: No **Public Water:** Yes **Storage: Unheated:** 4380 **Utility/Miscellaneous: Unheated:** 0 **Reactivated:** No
Fire Plan Review Required: Yes **Subdivision:** **Acres:** 1.58054 **Power Co.:** DUKE
Description: PROPOSED 60'X73' ACC BLDG

BLDC-012283-2021 **Type:** Building (Non-Residential) **District:** Lee County (Unincorporated) **Main Address:** 3010 Jefferson Davis Hwy
Status: Issued **Workclass:** Other **Project:** **Parcel:** 9630-16-1360-00 Sanford, NC 27332
Application Date: 12/01/2021 **Issue Date:** 01/14/2022 **Expiration:** 07/13/2022 **Last Inspection:** **Finaled Date:**
Zone: HC HC Highway Commercial ct **Sq Ft:** 0 **Valuation:** $15,000.00 **Assigned To:**
Additional Info:
Corner Lot: No **Private Sewer:** No **Public Sewer:** Yes **Private Well:** No **Public Water:** Yes
Reactivated: No **Fire Plan Review Required:** No **Construction Type:** V-A **Subdivision:** **Acres:** 10.73
Power Co.: DUKE

Description: UPGRADING EQUIPMENT AT EXISTING CELL TOWER

BLDC-012309-2021 | **Type:** Building (Non-Residential) | **District:** Sanford | **Main Address:** 807 E Main St
Status: Issued | **Workclass:** Addition | **Project:** | **Parcel:** 9652-83-1636-00 | Sanford, NC 27330
Application Date: 12/02/2021 | **Issue Date:** 01/06/2022 | **Expiration:** 01/19/2023 | **Last Inspection:** 01/19/2022 | **Finaled Date:**
Zone: LI LI Light Industrial | **Sq Ft:** 390 | **Valuation:** $40,000.00 | **Assigned To:** Samantha Miller
Additional Info:
Corner Lot: No | **Private Sewer:** No | **Public Sewer:** Yes | **Private Well:** No | **Public Water:** Yes
Storage: Heated: 450 | **Reactivated:** No | **Fire Plan Review Required:** No | **Construction Type:** II-B | **Subdivision:**
Acres: 25.39 | **Power Co.:** DUKE
Description: ADDING 13' X 30' BREEZEWAY TO CONNECT EXISTING BUILDINGS

BLDC-012320-2021 | **Type:** Building (Non-Residential) | **District:** Sanford | **Main Address:** 3310 Nc 87 Hwy
Status: Issued | **Workclass:** Other | **Project:** | **Parcel:** 9661-16-2164-00 | Sanford, NC 27332
Application Date: 12/02/2021 | **Issue Date:** 01/13/2022 | **Expiration:** 07/12/2022 | **Last Inspection:** | **Finaled Date:**
Zone: CZ CZ | **Sq Ft:** 0 | **Valuation:** $294,060.00 | **Assigned To:**
Additional Info:
Number of Stories: 1 | **Corner Lot:** No | **Private Sewer:** No | **Public Sewer:** Yes | **Private Well:** No
Public Water: Yes | **Reactivated:** No | **Fire Plan Review Required:** No | **Construction Type:** V-A | **Subdivision:**
Acres: 25.2232 | **Power Co.:** DUKE
Description: WALMART RESTROOM REMODEL

BLDC-012354-2021 | **Type:** Building (Non-Residential) | **District:** Lee County (Unincorporated) | **Main Address:** 5008 Womack Rd
Status: Issued | **Workclass:** Other | **Project:** | **Parcel:** 9645-83-6601-00 | Sanford, NC 27330
Application Date: 12/06/2021 | **Issue Date:** 01/04/2022 | **Expiration:** 07/03/2022 | **Last Inspection:** | **Finaled Date:**
Zone: LI LI Light Industrial | **Sq Ft:** 1,584 | **Valuation:** $169,992.00 | **Assigned To:**
Additional Info:
Number of Stories: 1 | **Corner Lot:** No | **Private Sewer:** No | **Public Sewer:** Yes | **Private Well:** No
Public Water: Yes | **Reactivated:** No | **Fire Plan Review Required:** No | **Construction Type:** V-A | **Subdivision:**
Watershed: CAPE FEAR / LEE COUNTY | **Acres:** 17.2465 | **Power Co.:** DUKE
Description: INTERIOR RENOVATION OF 5008 BUILDING FOR NEW FREESTANDING PAINT OFFICE

BLDC-012460-2021 | **Type:** Building (Non-Residential) | **District:** Sanford | **Main Address:** 2919 Beechtree Dr
Status: Issued | **Workclass:** Other | **Project:** | **Parcel:** 9644-43-1973-00 | Sanford, NC 27330
Application Date: 12/14/2021 | **Issue Date:** 01/13/2022 | **Expiration:** 01/25/2023 | **Last Inspection:** 01/31/2022 | **Finaled Date:**
Zone: R-20 R-20 | **Sq Ft:** 3,588 | **Valuation:** $655,200.00 | **Assigned To:**
Additional Info:
Corner Lot: No | **Private Sewer:** No | **Public Sewer:** Yes | **Private Well:** No | **Public Water:** Yes
Reactivated: No | **Fire Plan Review Required:** Yes | **Construction Type:** V-A | **Subdivision:** | **Acres:** 17.95
Power Co.: DUKE
Description: PROPOSED INTERIOR RENOVATIONS TO 3RD FLOOR OF EXISTING MEDICAL OFFICE BUILDING

PERMITS ISSUED BY TYPE (01/03/2022 TO 01/31/2022)

BLDC-012463-2021 | **Type:** Building (Non-Residential) | **District:** Lee County (Unincorporated) | **Main Address:** 298 Copper Mine Dr
Status: Issued | **Workclass:** Other | **Project:** | **Parcel:** 9656-79-9956-00 | Sanford, NC 27330
Application Date: 12/14/2021 | **Issue Date:** 01/25/2022 | **Expiration:** 07/24/2022 | **Last Inspection:** | **Finaled Date:**
Zone: RA RA Residential Agricultural | **Sq Ft:** 0 | **Valuation:** $19,600.00 | **Assigned To:**
Additional Info:
Corner Lot: No | **Private Sewer:** No | **Public Sewer:** No | **Private Well:** No | **Public Water:** No
Reactivated: No | **Fire Plan Review Required:** No | **Construction Type:** V-A | **Subdivision:** | **Watershed:** CAPE FEAR / LEE COUNTY
Acres: 3.6933 | **Power Co.:** DUKE
Description: CELL TOWER UPGRADE

BLDC-012485-2021 | **Type:** Building (Non-Residential) | **District:** Sanford | **Main Address:** 2000 Boone Trl
Status: Issued | **Workclass:** Addition | **Project:** | **Parcel:** 9634-45-2199-00 | Sanford, NC 27330
Application Date: 12/15/2021 | **Issue Date:** 01/10/2022 | **Expiration:** 07/09/2022 | **Last Inspection:** | **Finaled Date:**
Zone: LI LI Light Industrial | **Sq Ft:** 1,248 | **Valuation:** $190,000.00 | **Assigned To:**
Additional Info:
Corner Lot: No | **Business:** 1248 | **Private Sewer:** Yes | **Public Sewer:** No | **Private Well:** Yes
Public Water: No | **Reactivated:** No | **Fire Plan Review Required:** No | **Subdivision:** | **Acres:** 10.3206
Power Co.: DUKE
Description: PROPOSED ADDITION OF 1,248 SQUARE FEET TP EXISTING INDUSTRIAL STRUCTURE

BLDC-012487-2021 | **Type:** Building (Non-Residential) | **District:** Sanford | **Main Address:** 724 Spring Ln
Status: Issued | **Workclass:** Other | **Project:** | **Parcel:** 9643-22-4413-00 | Sanford, NC 27330
Application Date: 12/15/2021 | **Issue Date:** 01/20/2022 | **Expiration:** 07/19/2022 | **Last Inspection:** | **Finaled Date:**
Zone: C-2 C-2 General Commercial | **Sq Ft:** 0 | **Valuation:** $179,683.00 | **Assigned To:**
Additional Info:
Corner Lot: No | **Private Sewer:** No | **Public Sewer:** Yes | **Private Well:** No | **Public Water:** Yes
Reactivated: No | **Fire Plan Review Required:** No | **Construction Type:** V-A | **Subdivision:** | **Acres:** 1.88292
Power Co.: DUKE
Description: INSTALLATION OF A RETAINING WALL

BLDC-012548-2021 | **Type:** Building (Non-Residential) | **District:** Sanford | **Main Address:** 1013 Carthage St
Status: Issued | **Workclass:** Other | **Project:** | **Parcel:** 9642-46-0686-00 | Sanford, NC 27330
Application Date: 12/21/2021 | **Issue Date:** 01/20/2022 | **Expiration:** 07/19/2022 | **Last Inspection:** | **Finaled Date:**
Zone: C-2 C-2 General Commercial | **Sq Ft:** 5,267 | **Valuation:** $90,385.20 | **Assigned To:**
Additional Info:
Corner Lot: No | **Private Sewer:** No | **Public Sewer:** No | **Private Well:** No | **Public Water:** No
Reactivated: No | **Fire Plan Review Required:** No | **Construction Type:** V-A | **Subdivision:** | **Acres:** 0.4
Power Co.: DUKE
Description: RETAINING WALL INSTALLATION - 3 WALLS (CAROLINA DIALYSIS)

BLDC-012549-2021 | **Type:** Building (Non-Residential) | **District:** Sanford | **Main Address:** 940 Table Mountain Way
Status: Issued | **Workclass:** Other | **Project:** | **Parcel:** 9631-44-0754-00 | Sanford, NC 27330
Application Date: 12/21/2021 | **Issue Date:** 01/20/2022 | **Expiration:** 07/19/2022 | **Last Inspection:** | **Finaled Date:**
Zone: MF-12-C MF-12-C Multifamily Conditional | **Sq Ft:** 5,386 | **Valuation:** $114,815.75 | **Assigned To:**
Additional Info:
Corner Lot: No | **Private Sewer:** No | **Public Sewer:** No | **Private Well:** No | **Public Water:** No
Reactivated: No | **Fire Plan Review Required:** No | **Construction Type:** V-A | **Subdivision:** | **Acres:** 14.5082
Power Co.: DUKE
Description: 5 RETAINING WALLS FOR PINE RESERVE APARTMENTS /940 TABLE MOUNTAIN WAY (WALL 1), 1050 TABLE MOUNTAIN WAY (WALL 2), 1159 MIDPINES DR. (WALL 3), 1139 MIDPINES DR. (WALL 4), 600 EASTERN WHITE LN. (WALL 5). PH

BLDC-012554-2021 | **Type:** Building (Non-Residential) | **District:** Sanford | **Main Address:** 225 E Weatherspoon St
Status: Issued | **Workclass:** Other | **Project:** | **Parcel:** 9643-73-7577-00 | Sanford, NC 27330
Application Date: 12/21/2021 | **Issue Date:** 01/03/2022 | **Expiration:** 01/24/2023 | **Last Inspection:** 01/24/2022 | **Finaled Date:**
Zone: LI LI Light Industrial | **Sq Ft:** 0 | **Valuation:** $7,752.98 | **Assigned To:**
Additional Info:
Corner Lot: No | **Private Sewer:** No | **Public Sewer:** Yes | **Private Well:** No | **Public Water:** Yes
Reactivated: No | **Fire Plan Review Required:** No | **Construction Type:** V-A | **Flood Zone:** AEFW, SHADED X, AE, AE | **Subdivision:**
Acres: 20.2503 | **Power Co.:** DUKE
Description: FLOOR REPAIR

BLDC-012664-2022 | **Type:** Building (Non-Residential) | **District:** Sanford | **Main Address:** 6074 Enterprise Park Dr
Status: Issued | **Workclass:** Other | **Project:** | **Parcel:** 9655-39-6205-00 | Sanford, NC 27330
Application Date: 01/05/2022 | **Issue Date:** 01/28/2022 | **Expiration:** 07/27/2022 | **Last Inspection:** | **Finaled Date:**
Zone: CZ CZ | **Sq Ft:** 0 | **Valuation:** $2,000,000.00 | **Assigned To:** Samantha Miller
Additional Info:
Corner Lot: No | **Private Sewer:** No | **Public Sewer:** Yes | **Private Well:** No | **Public Water:** Yes
Reactivated: No | **Fire Plan Review Required:** Yes | **Construction Type:** V-B | **Subdivision:** | **Watershed:** CAPE FEAR / LEE COUNTY
Acres: 15.35 | **Power Co.:** DUKE
Description: HAZMAT STORAGE BUILDING & INTERIOR RENOVATIONS

BLDC-012818-2022 | **Type:** Building (Non-Residential) | **District:** Sanford | **Main Address:** 1142 Boykin Ave
Status: Issued | **Workclass:** Other | **Project:** | **Parcel:** 9642-65-5117-00 | Sanford, NC 27330
Application Date: 01/18/2022 | **Issue Date:** 01/27/2022 | **Expiration:** 07/26/2022 | **Last Inspection:** | **Finaled Date:**
Zone: R-6 R-6 | **Sq Ft:** 0 | **Valuation:** $8,466.21 | **Assigned To:**
Additional Info:
Corner Lot: No | **Private Sewer:** No | **Public Sewer:** Yes | **Private Well:** No | **Public Water:** Yes
Reactivated: No | **Fire Plan Review Required:** No | **Construction Type:** V-A | **Subdivision:** | **Acres:** 0.160232
Power Co.: DUKE
Description: INSTALL 6 PUSH PIERS W/LOW PROFILE BRACKET

PERMITS ISSUED FOR BUILDING (NON-RESIDENTIAL): 16

BUILDING (RESIDENTIAL)

PERMITS ISSUED BY TYPE (01/03/2022 TO 01/31/2022)

BRES-011266-2021*
Status: Stop Work Order
Application Date: 09/08/2021
Zone: RR RR
Additional Info:
Construction Type: V-B
Corner Lot: No
Acres: 0.119842
Description: NEW SFD - LOT 1050

Type: Building (Residential)
Workclass: New
Issue Date: 01/06/2022
Sq Ft: 1,765
Basement: No
Power Supplier: Duke Energy (800) 452-2777
Power Co.: DUKE

District: Lee County (Unincorporated)
Project: CAROLINA TRACE
Expiration: 07/05/2022
Valuation: $196,740.00
Number of Bathrooms: 2
Existing Utilities: Public Sewer, Public Water

Main Address: 1050 Upland Reach Sanford, NC
Parcel: 9660-92-7185-00
Last Inspection:
Finaled Date:
Assigned To: Samantha Miller
Building Occupancy: Residential
Fire Plan Review Required: No
Lot Number: 1050
Subdivision: CAROLINA TRACE

BRES-012251-2021
Status: Issued
Application Date: 11/29/2021
Zone: R-14 R-14 Residential Single-Family
Additional Info:
Construction Type: V-B
Power Supplier: Duke Energy (800) 452-2777
Power Co.: DUKE
Description: HEATED ADDITION - 24' X 4' HALLWAY & 15' X 15' ROOM

Type: Building (Residential)
Workclass: Addition
Issue Date: 01/18/2022
Sq Ft: 321
Basement: No
Existing Utilities: Public Sewer, Public Water

District: Sanford
Project:
Expiration: 07/17/2022
Valuation: $43,525.00
Building Occupancy: Residential
Fire Plan Review Required: No

Main Address: 302 S Currie Dr Sanford, NC 27330
Parcel: 9632-84-2441-00
Last Inspection:
Finaled Date:
Assigned To: Samantha Miller
Heated Square Footage: 321
Subdivision: LONGVIEW ACRES
Corner Lot: No
Acres: 0.397013

BRES-012418-2021
Status: Complete
Application Date: 12/09/2021
Zone: R-12 R-12 Residential Mixed
Additional Info:
Construction Type: V-B
Power Supplier: Duke Energy (800) 452-2777
Power Co.: DUKE
Description: ADDITION OF CONCRETE & WOODEN DECK {12 X 16 X 29 }

Type: Building (Residential)
Workclass: Addition
Issue Date: 01/25/2022
Sq Ft: 192
Basement: No
Existing Utilities: Public Sewer, Public Water

District: Sanford
Project:
Expiration: 01/26/2023
Valuation: $5,000.00
Building Occupancy: Residential
Fire Plan Review Required: No

Main Address: 1407 Pinehurst St Sanford, NC 27330
Parcel: 9642-93-9153-00
Last Inspection: 01/26/2022
Finaled Date: 01/26/2022
Assigned To: Samantha Miller
Porch/Deck Square Footage: 192
Subdivision: PINEHURST
Corner Lot: No
Acres: 0.311974

BRES-012453-2021
Status: Issued
Application Date: 12/13/2021
Zone: RA RA Residential Agricultural
Additional Info:
Construction Type: V-A
Power Supplier: Central Electric (919) 774-4900
Acres: 2.51
Description: NEW SFD- LOT 47

Type: Building (Residential)
Workclass: New
Issue Date: 01/18/2022
Sq Ft: 4,530
Basement: No
Existing Utilities: Private Sewer System, Public Water
Power Co.: CEMC

District: Lee County (Unincorporated)
Project:
Expiration: 01/28/2023
Valuation: $400,000.00
Building Occupancy: Residential
Fire Plan Review Required: No

Main Address: 95 Eaker Dr Cameron, NC 28326
Parcel: 9546-19-1951-00
Last Inspection: 01/28/2022
Finaled Date:
Assigned To: Chyna Kitt
Lot Number: 47
Subdivision: KENWOOD
Corner Lot: No
Watershed: LITTLE RIVER / LEE COUNTY

BRES-012455-2021 | **Type:** Building (Residential) | **District:** Lee County (Unincorporated) | **Main Address:** 313 A Cricket Hearth Dr
Status: Issued | **Workclass:** New | **Project:** WINDING CREEK FARM | **Parcel:** 9623-20-9860-00 | Sanford, NC 27330
Application Date: 12/13/2021 | **Issue Date:** 01/07/2022 | **Expiration:** 01/14/2023 | **Last Inspection:** 01/14/2022 | **Finaled Date:**
Zone: RR RR | **Sq Ft:** 3,903 | **Valuation:** $175,000.00 | **Assigned To:** Chyna Kitt
Additional Info:
Construction Type: V-A | **Basement:** No | **Number of Stories:** 2 | **Number of Bathrooms:** 2.5 | **Building Occupancy:** Residential
Lot Number: 100 | **Corner Lot:** No | **Power Supplier:** Central Electric (919) 774-4900 | **Existing Utilities:** Private Sewer System, Public Water | **Fire Plan Review Required:** No
Subdivision: WINDING CREEK FARM | **Watershed:** DEEP RIVER / LEE COUNTY | **Acres:** 0.79 | **Power Co.:** CEMC
Description: NEW SFD-LOT 100

BRES-012456-2021 | **Type:** Building (Residential) | **District:** Lee County (Unincorporated) | **Main Address:** 413 Cricket Hearth Dr
Status: Issued | **Workclass:** New | **Project:** WINDING CREEK FARM | **Parcel:** 9623-10-8901-00 | Sanford, NC 27330
Application Date: 12/13/2021 | **Issue Date:** 01/07/2022 | **Expiration:** 01/13/2023 | **Last Inspection:** 01/13/2022 | **Finaled Date:**
Zone: RR RR | **Sq Ft:** 2,363 | **Valuation:** $160,000.00 | **Assigned To:** Chyna Kitt
Additional Info:
Construction Type: V-A | **Basement:** No | **Number of Stories:** 1 | **Number of Bathrooms:** 2 | **Building Occupancy:** Residential
Lot Number: 107 | **Corner Lot:** No | **Power Supplier:** Central Electric (919) 774-4900 | **Existing Utilities:** Private Sewer System, Public Water | **Fire Plan Review Required:** No
Subdivision: WINDING CREEK FARM | **Watershed:** DEEP RIVER / LEE COUNTY | **Acres:** 0.702089 | **Power Co.:** CEMC
Description: NEW SFD- LOT 107

BRES-012555-2021 | **Type:** Building (Residential) | **District:** Lee County (Unincorporated) | **Main Address:** 213 Kensington Dr
Status: Issued | **Workclass:** New | **Project:** LEXINGTON FARMS | **Parcel:** 9661-83-5476-00 | Sanford, NC 27330
Application Date: 12/21/2021 | **Issue Date:** 01/07/2022 | **Expiration:** 07/06/2022 | **Last Inspection:** | **Finaled Date:**
Zone: RR RR | **Sq Ft:** 2,991 | **Valuation:** $143,000.00 | **Assigned To:** Paulette Harmon
Additional Info:
Construction Type: V-A | **Basement:** No | **Number of Stories:** 1 | **Number of Bathrooms:** 3 | **Building Occupancy:** Residential
Lot Number: 30 | **Corner Lot:** No | **Fire Plan Review Required:** No | **Proposed Utilities:** Private Sewer System, Public Water | **Subdivision:** LEXINGTON FARMS
Acres: 0.78 | **Power Co.:** DUKE
Description: NEW SFD LOT - 30

BRES-012556-2021 | **Type:** Building (Residential) | **District:** Lee County (Unincorporated) | **Main Address:** 217 Kensington Dr
Status: Issued | **Workclass:** New | **Project:** LEXINGTON FARMS | **Parcel:** 9661-83-5514-00 | Sanford, NC 27330
Application Date: 12/21/2021 | **Issue Date:** 01/07/2022 | **Expiration:** 07/06/2022 | **Last Inspection:** | **Finaled Date:**
Zone: RR RR | **Sq Ft:** 2,463 | **Valuation:** $152,000.00 | **Assigned To:** Paulette Harmon
Additional Info:
Construction Type: V-A | **Basement:** No | **Number of Stories:** 1 | **Number of Bathrooms:** 2 | **Building Occupancy:** Residential
Lot Number: 29 | **Corner Lot:** No | **Fire Plan Review Required:** No | **Proposed Utilities:** Private Sewer System, Public Water | **Subdivision:** LEXINGTON FARMS
Acres: 0.75 | **Power Co.:** DUKE
Description: NEW SFD LOT-29

PERMITS ISSUED BY TYPE (01/03/2022 TO 01/31/2022)

BRES-012585-2021 | **Type:** Building (Residential) | **District:** Lee County (Unincorporated) | **Main Address:** 1032 S Franklin Dr
Status: Issued | **Workclass:** Accessory Structure | **Project:** | **Parcel:** 9621-78-4251-00 | Sanford, NC 27330
Application Date: 12/28/2021 | **Issue Date:** 01/18/2022 | **Expiration:** 07/17/2022 | **Last Inspection:** | **Finaled Date:**
Zone: RA RA Residential Agricultural | **Sq Ft:** 576 | **Valuation:** $40,320.00 | **Assigned To:** Samantha Miller
Additional Info:
Construction Type: V-B | **Basement:** No | **Building Occupancy:** Storage | **Corner Lot:** No | **Power Supplier:** Duke Energy (800) 452-2777
Existing Utilities: Private Sewer System, Public Water | **Fire Plan Review Required:** No | **Subdivision:** | **Acres:** 2.92 | **Power Co.:** DUKE
Description: 24' x 24' DETACHED GARAGE

BRES-012586-2021 | **Type:** Building (Residential) | **District:** Lee County (Unincorporated) | **Main Address:** 1032 S Franklin Dr
Status: Issued | **Workclass:** Addition | **Project:** | **Parcel:** 9621-78-4251-00 | Sanford, NC 27330
Application Date: 12/28/2021 | **Issue Date:** 01/18/2022 | **Expiration:** 07/17/2022 | **Last Inspection:** | **Finaled Date:**
Zone: RA RA Residential Agricultural | **Sq Ft:** 1,108 | **Valuation:** $77,220.00 | **Assigned To:** Samantha Miller
Additional Info:
Construction Type: V-B | **Basement:** No | **Number of Bathrooms:** 3.5 | **Building Occupancy:** Residential | **Heated Square Footage:** 708
Porch/Deck Square Footage: 400 | **Corner Lot:** No | **Power Supplier:** Duke Energy (800) 452-2777 | **Existing Utilities:** Private Sewer System, Public Water | **Fire Plan Review Required:** No
Subdivision: | **Acres:** 2.92 | **Power Co.:** DUKE
Description: DEN/MASTER BEDROOM ADDITION/ SUNROOM & DECK

BRES-012592-2021 | **Type:** Building (Residential) | **District:** Sanford ETJ | **Main Address:** 725 St. Andrews Church Rd
Status: Issued | **Workclass:** New | **Project:** | **Parcel:** 9651-03-0817-00 | Sanford, NC 27332
Application Date: 12/28/2021 | **Issue Date:** 01/11/2022 | **Expiration:** 01/31/2023 | **Last Inspection:** 01/31/2022 | **Finaled Date:**
Zone: R-20 R-20 | **Sq Ft:** 2,492 | **Valuation:** $150,000.00 | **Assigned To:** Chyna Kitt
Additional Info:
Construction Type: V-A | **Basement:** No | **Number of Stories:** 1 | **Number of Bathrooms:** 2 | **Building Occupancy:** Residential
Lot Number: 2 | **Corner Lot:** No | **Power Supplier:** Duke Energy (800) 452-2777 | **Existing Utilities:** Private Sewer System, Public Water | **Fire Plan Review Required:** No
Subdivision: WINSTEAD FARMS | **Acres:** 0.69 | **Power Co.:** DUKE
Description: NEW SFD- LOT 2

BRES-012599-2021 | **Type:** Building (Residential) | **District:** Lee County (Unincorporated) | **Main Address:** 432 E Harbor Trace
Status: Issued | **Workclass:** New | **Project:** CAROLINA TRACE | **Parcel:** 9670-01-4377-00 | Sanford, NC 27330
Application Date: 12/29/2021 | **Issue Date:** 01/12/2022 | **Expiration:** 01/19/2023 | **Last Inspection:** 01/19/2022 | **Finaled Date:**
Zone: RR RR | **Sq Ft:** 1,811 | **Valuation:** $125,000.00 | **Assigned To:** Paulette Harmon
Additional Info:
Construction Type: V-A | **Basement:** No | **Number of Stories:** 1 | **Number of Bathrooms:** 2 | **Building Occupancy:** Residential
Lot Number: 432 | **Corner Lot:** No | **Fire Plan Review Required:** No | **Proposed Utilities:** Public Sewer, Public Water | **Subdivision:** CAROLINA TRACE
Acres: 0.171994 | **Power Co.:** DUKE
Description: NEW SFD

PERMITS ISSUED BY TYPE (01/03/2022 TO 01/31/2022)

BRES-012618-2021 | **Type:** Building (Residential) | **District:** Lee County (Unincorporated) | **Main Address:** 436 Phil Johnson Rd
Status: Issued | **Workclass:** Renovations | **Project:** | **Parcel:** 9656-28-0671-00 | Sanford, NC 27330
Application Date: 12/30/2021 | **Issue Date:** 01/07/2022 | **Expiration:** 07/06/2022 | **Last Inspection:** | **Finaled Date:**
Zone: RA RA Residential Agricultural | **Sq Ft:** 0 | **Valuation:** $20,000.00 | **Assigned To:** Chyna Kitt
Additional Info:
Construction Type: V-A | **Basement:** No | **Number of Stories:** 1 | **Building Occupancy:** Residential | **Corner Lot:** No
Power Supplier: Duke Energy (800) 452-2777 | **Existing Utilities:** Private Sewer System, Public Water | **Fire Plan Review Required:** No | **Subdivision:** | **Acres:** 3.20525
Power Co.: DUKE
Description: PROPOSED ENCLOSURE OF EXSITING PORCH

BRES-012638-2022 | **Type:** Building (Residential) | **District:** Sanford | **Main Address:** 207 Wickfield Dr
Status: Complete | **Workclass:** Addition | **Project:** WICKFIELD DRIVE | **Parcel:** 9632-42-3097-00 | Sanford, NC 27330
Application Date: 01/04/2022 | **Issue Date:** 01/06/2022 | **Expiration:** 01/31/2023 | **Last Inspection:** 01/31/2022 | **Finaled Date:** 01/31/2022
Zone: R-20 R-20 | **Sq Ft:** 300 | **Valuation:** $13,000.00 | **Assigned To:** Chyna Kitt
Additional Info:
Construction Type: V-A | **Basement:** No | **Building Occupancy:** Residential | **Porch/Deck Square Footage:** 300 | **Corner Lot:** No
Power Supplier: Duke Energy (800) 452-2777 | **Existing Utilities:** Public Sewer, Public Water | **Fire Plan Review Required:** No | **Subdivision:** WEST LANDING | **Acres:** 0.486832
Power Co.: DUKE
Description: PROPOSED 15'X 20' DECK ADDITION

BRES-012639-2022 | **Type:** Building (Residential) | **District:** Sanford | **Main Address:** 320 Carbonton Rd
Status: Issued | **Workclass:** Renovations | **Project:** CARBONTON ROAD | **Parcel:** 9642-39-0067-00 | Sanford, NC 27330
Application Date: 01/04/2022 | **Issue Date:** 01/28/2022 | **Expiration:** 07/27/2022 | **Last Inspection:** | **Finaled Date:**
Zone: R-12 R-12 Residential Mixed | **Sq Ft:** 0 | **Valuation:** $36,500.00 | **Assigned To:** Chyna Kitt
Additional Info:
Basement: No | **Corner Lot:** No | **Fire Plan Review Required:** No | **Subdivision:** MCIVER PARK | **Acres:** 1.09749
Power Co.: DUKE
Description: PROPOSED BASEMENT RENOVATION OF EXISITNG SFD / UPDATED APP BROUGHT INTO OFFICE ON 01/18/2022 WITH CORRECT LICENSE NUMBER APP WILL BE PUT IN WITH REVIEW. PH 01/18/2022

BRES-012644-2022 | **Type:** Building (Residential) | **District:** Sanford | **Main Address:** 506 Cross St
Status: Complete | **Workclass:** Renovations | **Project:** CROSS STREET | **Parcel:** 9643-40-3397-00 | Sanford, NC 27330
Application Date: 01/04/2022 | **Issue Date:** 01/07/2022 | **Expiration:** 01/25/2023 | **Last Inspection:** 01/25/2022 | **Finaled Date:** 01/25/2022
Zone: R-6 R-6 | **Sq Ft:** 0 | **Valuation:** $1,500.00 | **Assigned To:** Chyna Kitt
Additional Info:
Construction Type: V-A | **Basement:** No | **Number of Stories:** 2 | **Number of Bathrooms:** 2 | **Building Occupancy:** Residential
Corner Lot: No | **Power Supplier:** Duke Energy (800) 452-2777 | **Existing Utilities:** Public Sewer, Public Water | **Fire Plan Review Required:** No | **Historic District:** ROSEMONT-MCKIVER
Subdivision: MCIVER PARK | **Acres:** 0.262743 | **Power Co.:** DUKE
Description: PROPOSED REMOVAL OF INTERIOR WALL & INTERIOR RENOVATION

BRES-012647-2022 | **Type:** Building (Residential) | **District:** Lee County (Unincorporated) | **Main Address:** 1906 Valley Rd
Status: Issued | **Workclass:** Accessory Structure | **Project:** | **Parcel:** 9624-93-0018-00 | Sanford, NC 27330
Application Date: 01/04/2022 | **Issue Date:** 01/07/2022 | **Expiration:** 07/06/2022 | **Last Inspection:** | **Finaled Date:**
Zone: RR RR | **Sq Ft:** 864 | **Valuation:** $63,000.00 | **Assigned To:** Chyna Kitt
Additional Info:
Construction Type: V-A | **Basement:** No | **Building Occupancy:** Residential | **Lot Number:** 2 | **Corner Lot:** No
Power Supplier: Duke Energy (800) 452-2777 | **Existing Utilities:** Private Sewer System, Public Water | **Fire Plan Review Required:** No | **Subdivision:** | **Acres:** 5.13212
Power Co.: DUKE
Description: PROPOSED DETACHED GARAGE

BRES-012651-2022 | **Type:** Building (Residential) | **District:** Lee County (Unincorporated) | **Main Address:** 824 St Andrews Church Rd
Status: Issued | **Workclass:** New | **Project:** | **Parcel:** 9651-03-0262-00 | Sanford, NC 27330
Application Date: 01/05/2022 | **Issue Date:** 01/13/2022 | **Expiration:** 01/26/2023 | **Last Inspection:** 01/26/2022 | **Finaled Date:**
Zone: | **Sq Ft:** 1,929 | **Valuation:** $156,250.00 | **Assigned To:** Samantha Miller
Additional Info:
Construction Type: V-B | **Basement:** No | **Number of Stories:** 2 | **Number of Bathrooms:** 2 | **Building Occupancy:** Residential
Heated Square Footage: 1427 | **Unheated Square Footage:** 0 | **Porch/Deck Square Footage:** 502 | **Lot Number:** 1 | **Corner Lot:** No
Power Supplier: Duke Energy (800) 452-2777 | **Fire Plan Review Required:** No | **Proposed Utilities:** Private Sewer System, Public Water | **Subdivision:** | **Acres:** 7.49743
Description: NEW SFD - LOT 1 ** ADDRESS CHANGED FROM 832 TO 824 ST ANDREWS CHURCH RD PER PLANNING AND ZONING ON 01/25/22 **

BRES-012655-2022 | **Type:** Building (Residential) | **District:** Lee County (Unincorporated) | **Main Address:** 2006 Sheriff Watson Rd
Status: Issued | **Workclass:** New | **Project:** | **Parcel:** 9559-07-7670-00 | Sanford, NC 27332
Application Date: 01/05/2022 | **Issue Date:** 01/14/2022 | **Expiration:** 01/31/2023 | **Last Inspection:** 01/31/2022 | **Finaled Date:**
Zone: RA RA Residential Agricultural | **Sq Ft:** 2,700 | **Valuation:** $225,000.00 | **Assigned To:** Chyna Kitt
Additional Info:
Construction Type: V-A | **Basement:** No | **Number of Stories:** 1 | **Number of Bathrooms:** 3 | **Building Occupancy:** Residential
Lot Number: 1 | **Corner Lot:** No | **Power Supplier:** Central Electric (919) 774-4900 | **Existing Utilities:** Private Sewer System, Public Water | **Fire Plan Review Required:** No
Subdivision: | **Acres:** 1.26 | **Power Co.:** CEMC
Description: NEW SFD- LOT 2

BRES-012656-2022 | **Type:** Building (Residential) | **District:** Lee County (Unincorporated) | **Main Address:** 1974 Sheriff Watson Rd
Status: Issued | **Workclass:** New | **Project:** | **Parcel:** 9559-07-7892-00 | Sanford, NC 27332
Application Date: 01/05/2022 | **Issue Date:** 01/14/2022 | **Expiration:** 01/31/2023 | **Last Inspection:** 01/31/2022 | **Finaled Date:**
Zone: RA RA Residential Agricultural | **Sq Ft:** 2,700 | **Valuation:** $225,000.00 | **Assigned To:** Chyna Kitt
Additional Info:
Construction Type: V-A | **Basement:** No | **Number of Stories:** 1 | **Number of Bathrooms:** 3 | **Building Occupancy:** Residential
Lot Number: 1 | **Corner Lot:** No | **Power Supplier:** Central Electric (919) 774-4900 | **Existing Utilities:** Private Sewer System, Public Water | **Fire Plan Review Required:** No
Subdivision: | **Acres:** 1.24 | **Power Co.:** CEMC
Description: NEW SFD- LOT 1

BRES-012658-2022 **Type:** Building (Residential) **District:** Lee County (Unincorporated) **Main Address:** 332 Bridges Rd
Status: Complete **Workclass:** Accessory Structure **Project:** **Parcel:** 9622-60-3540-00 Sanford, NC 27330
Application Date: 01/05/2022 **Issue Date:** 01/10/2022 **Expiration:** 01/11/2023 **Last Inspection:** 01/10/2022 **Finaled Date:** 01/11/2022
Zone: RR RR **Sq Ft:** 0 **Valuation:** $28,000.00 **Assigned To:** Samantha Miller
Additional Info:
Construction Type: V-B **Basement:** No **Building Occupancy:** Residential **Corner Lot:** No **Power Supplier:** Duke Energy (800) 452-2777
Existing Utilities: Private Sewer System, Public Water **Fire Plan Review Required:** No **Subdivision:** **Acres:** 2.03 **Power Co.:** DUKE
Description: 24' X 24' ACCESSORY BUILDING

BRES-012663-2022 **Type:** Building (Residential) **District:** Lee County (Unincorporated) **Main Address:** 8605 Harrington Pl
Status: Issued **Workclass:** Renovations **Project:** LAKE VILLANOW **Parcel:** 9519-88-1857-00 Sanford, NC 27332
Application Date: 01/05/2022 **Issue Date:** 01/12/2022 **Expiration:** 01/21/2023 **Last Inspection:** 01/21/2022 **Finaled Date:**
Zone: RR RR **Sq Ft:** 0 **Valuation:** $53,989.65 **Assigned To:** Samantha Miller
Additional Info:
Construction Type: V-B **Basement:** No **Building Occupancy:** Residential **Corner Lot:** No **Power Supplier:** Duke Energy (800) 452-2777
Existing Utilities: Private Sewer System, Public Water **Fire Plan Review Required:** No **Subdivision:** LAKE VILLANOW **Acres:** 1.96249 **Power Co.:** DUKE
Description: KITCHEN REMODEL

BRES-012690-2022 **Type:** Building (Residential) **District:** Lee County (Unincorporated) **Main Address:** 4911 Buckhorn Rd
Status: Issued **Workclass:** New **Project:** **Parcel:** 9693-07-7543-00 Sanford, NC 27330
Application Date: 01/07/2022 **Issue Date:** 01/24/2022 **Expiration:** 01/25/2023 **Last Inspection:** 01/25/2022 **Finaled Date:**
Zone: RA RA Residential Agricultural **Sq Ft:** 5,140 **Valuation:** $500,000.00 **Assigned To:** Chyna Kitt
Additional Info:
Construction Type: V-A **Basement:** No **Number of Stories:** 1 **Number of Bathrooms:** 4 **Building Occupancy:** Residential
Corner Lot: No **Power Supplier:** Central Electric (919) 774-4900 **Existing Utilities:** Private Sewer System, Public Water **Fire Plan Review Required:** No **Subdivision:**
Acres: 50.32 **Power Co.:** CEMC
Description: NEW SFD

BRES-012697-2022 **Type:** Building (Residential) **District:** Lee County (Unincorporated) **Main Address:** 833 Hancock Rd
Status: Issued **Workclass:** Manufactured Home **Project:** **Parcel:** 9528-26-3721-00 Cameron, NC 28326
Application Date: 01/10/2022 **Issue Date:** 01/10/2022 **Expiration:** 07/09/2022 **Last Inspection:** **Finaled Date:**
Zone: RA/MH RA/MH **Sq Ft:** 0 **Valuation:** $0.00 **Assigned To:** Chyna Kitt
Additional Info:
Public Sewer: No **Public Water:** Yes **Completed Manufactured Home Set Up Permit:** No **Manufactured Home Single-Wide:** 1 **Duke Energy:** No
Central EMC: Yes **Reactivated:** No **Septic Tank:** Yes **Well:** No **Watershed:** LITTLE RIVER / LEE COUNTY
Acres: 1.5 **Power Co.:** CEMC **Subdivision:**
Description: PROPOSED 14'X70' SINGLE-WIDE SET UP PERMIT

PERMITS ISSUED BY TYPE (01/03/2022 TO 01/31/2022)

BRES-012720-2022 | **Type:** Building (Residential) | **District:** Broadway | **Main Address:** 40 Green Acres Dr
Status: Issued | **Workclass:** New | **Project:** SEMINOLE FIELDS | **Parcel:** Broadway, NC 27505
Application Date: 01/11/2022 | **Issue Date:** 01/24/2022 | **Expiration:** 07/23/2022 | **Last Inspection:** | **Finaled Date:**
Zone: | **Sq Ft:** 2,634 | **Valuation:** $136,000.00 | **Assigned To:** Samantha Miller
Additional Info:
Construction Type: V-B | **Basement:** No | **Number of Stories:** 1 | **Number of Bathrooms:** 2.5 | **Building Occupancy:** Residential
Lot Number: 1A | **Corner Lot:** No | **Power Supplier:** Duke Energy (800) 452-2777 | **Fire Plan Review Required:** No | **Proposed Utilities:** Private Sewer System, Private Well
Description: NEW SFD - LOT 1A

BRES-012753-2022 | **Type:** Building (Residential) | **District:** Lee County (Unincorporated) | **Main Address:** 1641 Poplar Springs Church Rd
Status: Issued | **Workclass:** New | **Project:** | **Parcel:** 9663-73-5072-00 | Sanford, NC
Application Date: 01/12/2022 | **Issue Date:** 01/31/2022 | **Expiration:** 07/30/2022 | **Last Inspection:** | **Finaled Date:** 01/20/2022
Zone: RA RA Residential Agricultural | **Sq Ft:** 2,095 | **Valuation:** $250,000.00 | **Assigned To:** Chyna Kitt
Additional Info:
Construction Type: V-A | **Basement:** No | **Number of Stories:** 1 | **Number of Bathrooms:** 2 | **Building Occupancy:** Residential
Lot Number: 1 | **Corner Lot:** No | **Power Supplier:** Central Electric (919) 774-4900 | **Existing Utilities:** Private Sewer System, Public Water | **Fire Plan Review Required:** No
Subdivision: POPLAR SPRINGS ESTATES | **Watershed:** CAPE FEAR / LEE COUNTY | **Acres:** 1.35767 | **Power Co.:** CEMC
Description: NEW SFD - LOT-1 (POPLAR SPRINGS ESTATES)

BRES-012774-2022 | **Type:** Building (Residential) | **District:** Sanford | **Main Address:** 112 Balsam Ln
Status: Issued | **Workclass:** New | **Project:** BALSAM LN | **Parcel:** 9644-98-2056-00 | Sanford, NC 27330
Application Date: 01/13/2022 | **Issue Date:** 01/24/2022 | **Expiration:** 07/23/2022 | **Last Inspection:** | **Finaled Date:**
Zone: R-14 R-14 Residential Single-Family | **Sq Ft:** 2,305 | **Valuation:** $189,000.00 | **Assigned To:** Chyna Kitt
Additional Info:
Construction Type: V-A | **Basement:** No | **Number of Stories:** 1.5 | **Number of Bathrooms:** 2 | **Building Occupancy:** Residential
Lot Number: 8 PH 1 | **Corner Lot:** No | **Power Supplier:** Duke Energy (800) 452-2777 | **Existing Utilities:** Public Sewer, Public Water | **Fire Plan Review Required:** No
Flood Zone: SHADED X, AE | **Subdivision:** ARBOR GLEN | **Acres:** 0.400125 | **Power Co.:** DUKE
Description: NEW SFD- LOT 8 PH 1

BRES-012817-2022 | **Type:** Building (Residential) | **District:** Sanford | **Main Address:** 1221 Cedarhurst Dr
Status: Issued | **Workclass:** Other | **Project:** WOODBRIDGE FOREST | **Parcel:** 9650-89-4891-00 | Sanford, NC 27332
Application Date: 01/18/2022 | **Issue Date:** 01/27/2022 | **Expiration:** 07/26/2022 | **Last Inspection:** | **Finaled Date:**
Zone: R-10 R-10 Residential Mixed | **Sq Ft:** 0 | **Valuation:** $11,090.82 | **Assigned To:** Paulette Harmon
Additional Info:
Construction Type: V-A | **Basement:** No | **Number of Stories:** 1 | **Number of Bathrooms:** 2 | **Building Occupancy:** Residential
Lot Number: 415 | **Corner Lot:** No | **Existing Utilities:** Public Sewer, Public Water | **Fire Plan Review Required:** No | **Subdivision:** WOODBRIDGE FOREST
Acres: 0.321646 | **Power Co.:** DUKE
Description: INSTALLATION OF 3 SMART JACKS, REPLACE (25) 2X10 GIRDERS (WOOD REPAIR)

BRES-012849-2022 | **Type:** Building (Residential) | **District:** Lee County (Unincorporated) | **Main Address:** 4047 Cox Mill Rd
Status: Issued | **Workclass:** Accessory Structure | **Project:** | **Parcel:** 9671-12-5608-00 | Sanford, NC 27332
Application Date: 01/20/2022 | **Issue Date:** 01/20/2022 | **Expiration:** 07/19/2022 | **Last Inspection:** | **Finaled Date:**
Zone: RA RA Residential Agricultural | **Sq Ft:** 0 | **Valuation:** $0.00 | **Assigned To:** Paulette Harmon
Additional Info:
Basement: No | **Corner Lot:** No | **Fire Plan Review Required:** No | **Subdivision:** | **Acres:** 24.3186
Power Co.: DUKE
Description: WIRING OF ACCESSORY BUILDING ON BONAFIDE FARM

BRES-012870-2022 | **Type:** Building (Residential) | **District:** Lee County (Unincorporated) | **Main Address:** 2121 S Plank Rd
Status: Issued | **Workclass:** Manufactured Home | **Project:** | **Parcel:** 9602-60-2293-00 | Sanford, NC 27330
Application Date: 01/24/2022 | **Issue Date:** 01/24/2022 | **Expiration:** 07/23/2022 | **Last Inspection:** | **Finaled Date:**
Zone: RA RA Residential Agricultural | **Sq Ft:** 0 | **Valuation:** $0.00 | **Assigned To:** Samantha Miller
Additional Info:
Public Sewer: No | **Public Water:** No | **Completed Manufactured Home Set Up Permit:** No | **Manufactured Home Double-Wide:** 1 | **Duke Energy:** No
Central EMC: No | **Reactivated:** No | **Septic Tank:** No | **Well:** No | **Acres:** 21.5146
Power Co.: CEMC | **Subdivision:**
Description: SET UP OF DOUBLE WIDE

PERMITS ISSUED FOR BUILDING (RESIDENTIAL): 30

CHANGE OF OCCUPANCY

OCC-012882-2022 | **Type:** Change of Occupancy | **District:** Sanford | **Main Address:** 619 Glenwood Dr
Status: Complete | **Workclass:** Change of Occupancy | **Project:** | **Parcel:** 9634-41-2594-00 | Sanford, NC 27330
Application Date: 01/25/2022 | **Issue Date:** 01/25/2022 | **Expiration:** 01/27/2023 | **Last Inspection:** 01/27/2022 | **Finaled Date:** 01/28/2022
Zone: R-14 R-14 Residential Single-Family | **Sq Ft:** 0 | **Valuation:** $0.00 | **Assigned To:** Chris Riggins
Additional Info:
City/County Sewer: No | **City/County Water:** No | **Spectic Tank:** No | **Well:** No | **Public Water:** No
Acres: 0.546687 | **Power Co.:** DUKE | **Subdivision:** GLENWOOD
Description: CHANGE OF OCCUPANCY FROM RESIDENTIAL SFD TO MEGGIE'S FAMILY CARE HOME

PERMITS ISSUED FOR CHANGE OF OCCUPANCY: 1

DEMOLITION

DEMO-012718-2022 | **Type:** Demolition | **District:** Sanford | **Main Address:** 1801 Douglas Dr
Status: Issued | **Workclass:** Non-Residential | **Project:** | **Parcel:** 9643-05-6303-00 | Sanford, NC 27330
Application Date: 01/11/2022 | **Issue Date:** 01/26/2022 | **Expiration:** 07/25/2022 | **Last Inspection:** | **Finaled Date:**
Zone: OI OI | **Sq Ft:** 0 | **Valuation:** $0.00 | **Assigned To:** Samantha Miller
Additional Info:
Public Water: No | **Number of Buildings:** 0 | **Number of Dwellings:** 0 | **Acres:** 4.33168 | **Power Co.:** DUKE
Subdivision:
Description: DEMO PERMIT

DEMO-012788-2022 | **Type:** Demolition | **District:** Sanford | **Main Address:** 1301 Boykin Ave
Status: Issued | **Workclass:** Residential | **Project:** | **Parcel:** 9642-65-6088-00 | Sanford, NC 27330
Application Date: 01/14/2022 | **Issue Date:** 01/14/2022 | **Expiration:** 07/13/2022 | **Last Inspection:** | **Finaled Date:**
Zone: R-6 R-6 | **Sq Ft:** 0 | **Valuation:** $0.00 | **Assigned To:**
Additional Info:
Public Water: No | **Construction Type:** V-A | **Building Occupancy:** R-3 1 & 2 Family Dwellings | **Number of Buildings:** 0 | **Number of Dwellings:** 1
Acres: 0.138391 | **Power Co.:** DUKE | **Subdivision:** OAKVIEW
Description: DEMO PERMIT FOR RETAINING WALL

DEMO-012895-2022 | **Type:** Demolition | **District:** Lee County (Unincorporated) | **Main Address:** 989 White Hill Rd
Status: Issued | **Workclass:** Non-Residential | **Project:** | **Parcel:** 9529-78-9741-00 | Sanford, NC 27332
Application Date: 01/26/2022 | **Issue Date:** 01/26/2022 | **Expiration:** 07/25/2022 | **Last Inspection:** | **Finaled Date:**
Zone: RA RA Residential Agricultural | **Sq Ft:** 0 | **Valuation:** $0.00 | **Assigned To:**
Additional Info:
Public Water: No | **Building Occupancy:** A-3 Churches, Gymnasiums | **Number of Buildings:** 1 | **Number of Dwellings:** 0 | **Acres:** 8.29
Power Co.: DUKE | **Subdivision:**
Description: DEMOLITION PERMIT FOR SOLID ROCK COMMUNITY CHURCH

PERMITS ISSUED FOR DEMOLITION: 3

ELECTRICAL (NON-RESIDENTIAL)

ELEC-012587-2021 | **Type:** Electrical (Non-Residential) | **District:** Lee County (Unincorporated) | **Main Address:** 2702 Farrell Rd
Status: Issued | **Workclass:** Miscellaneous | **Project:** | **Parcel:** 9666-22-9006-00 | Sanford, NC 27330
Application Date: 12/28/2021 | **Issue Date:** 01/03/2022 | **Expiration:** 07/02/2022 | **Last Inspection:** | **Finaled Date:**
Zone: RA RA Residential Agricultural | **Sq Ft:** 0 | **Valuation:** $0.00 | **Assigned To:**
Additional Info:
Duke Energy: No | **Service Change Out: Up to 100 Amps:** No | **Service Change Out: 125 to 200 Amps:** No | **Electrical - Fire Alarm:** No | **Standalone Electrical Permit:** No
Progress Energy: No | **Central Electric (EMC):** No | **Watershed:** CAPE FEAR / LEE COUNTY | **Acres:** 9.96468 | **Power Co.:** DUKE
Subdivision:
Description: REPLACE NURSE CALL SYSTEM. LOW VOLTAGE EXPECTED

ELEC-012640-2022 | **Type:** Electrical (Non-Residential) | **District:** Lee County (Unincorporated) | **Main Address:** 1125 Dalrymple Farm Rd
Status: Issued | **Workclass:** Alteration | **Project:** | **Parcel:** 9683-10-0245-00 | Sanford, NC 27330
Application Date: 01/04/2022 | **Issue Date:** 01/04/2022 | **Expiration:** 07/03/2022 | **Last Inspection:** | **Finaled Date:**
Zone: RA RA Residential Agricultural | **Sq Ft:** 0 | **Valuation:** $0.00 | **Assigned To:**
Additional Info:
Duke Energy: No | **Service Change Out: Up to 100 Amps:** No | **Service Change Out: 125 to 200 Amps:** No | **Electrical - Fire Alarm:** No | **Standalone Electrical Permit:** Yes
Progress Energy: No | **Central Electric (EMC):** Yes | **Total Amperage:** 400 | **Acres:** 0.985486 | **Power Co.:** CEMC
Subdivision:
Description: 400 AMPS INSTALL FOR AGRICULTURE USE POLE BARN

ELEC-012717-2022 **Type:** Electrical (Non-Residential) **District:** Lee County (Unincorporated) **Main Address:** 4878 Carbonton Rd
Status: Complete **Workclass:** Miscellaneous **Project:** **Parcel:** 9613-77-3685-00 Sanford, NC 27330
Application Date: 01/11/2022 **Issue Date:** 01/12/2022 **Expiration:** 01/14/2023 **Last Inspection:** 01/14/2022 **Finaled Date:** 01/14/2022
Zone: RA RA Residential Agricultural **Sq Ft:** 0 **Valuation:** $0.00 **Assigned To:**
Additional Info:
Building Permit #: **Contractor PIN #:** 11335-U **Duke Energy:** No **Service Change Out: Up to 100 Amps:** No **Service Change Out: 125 to 200 Amps:** No
Number of Room Additions: 0 **Number of Modular Homes:** 0 **Number of Signs (Sign WC Only):** 0 **Electrical - Fire Alarm:** No **Standalone Electrical Permit:** Yes
Progress Energy: No **Central Electric (EMC):** Yes **Total Amperage:** 200 **Number of Special Outlets:** 0 **Number of Sub-panels:** 0
Watershed: DEEP RIVER / LEE COUNTY **Acres:** 5.96835 **Power Co.:** CEMC **Subdivision:**
Description: Installing meter on building. Building was fed from another building. Everything else in building is existing

---

ELEC-012723-2022 **Type:** Electrical (Non-Residential) **District:** Lee County (Unincorporated) **Main Address:** 200 Saintsbury Pl
Status: Complete **Workclass:** Sign **Project:** **Parcel:** 9519-69-1155-00 Sanford, NC 27332
Application Date: 01/11/2022 **Issue Date:** 01/13/2022 **Expiration:** 01/18/2023 **Last Inspection:** 01/18/2022 **Finaled Date:** 01/18/2022
Zone: RA RA Residential Agricultural **Sq Ft:** 0 **Valuation:** $0.00 **Assigned To:**
Additional Info:
Building Permit #: **Contractor PIN #:** 18985-L **Duke Energy:** No **Service Change Out: Up to 100 Amps:** No **Service Change Out: 125 to 200 Amps:** No
Number of Room Additions: 0 **Number of Modular Homes:** 0 **Number of Signs (Sign WC Only):** 1 **Electrical - Fire Alarm:** No **Standalone Electrical Permit:** Yes
Progress Energy: No **Central Electric (EMC):** No **Total Amperage:** 0 **Number of Special Outlets:** 0 **Number of Sub-panels:** 0
Acres: 2.28195 **Power Co.:** DUKE **Subdivision:** BOCA ESTATES
Description: re-apply power to existing 200amp/240 volt panel for signage at sub division

---

ELEC-012758-2022 **Type:** Electrical (Non-Residential) **District:** Sanford **Main Address:** 601 N Fifth St
Status: Issued **Workclass:** Miscellaneous **Project:** **Parcel:** 9643-83-6804-00 Sanford, NC 27330
Application Date: 01/13/2022 **Issue Date:** 01/13/2022 **Expiration:** 01/14/2023 **Last Inspection:** 01/14/2022 **Finaled Date:**
Zone: LI LI Light Industrial **Sq Ft:** 0 **Valuation:** $0.00 **Assigned To:**
Additional Info:
Duke Energy: Yes **Service Change Out: Up to 100 Amps:** No **Service Change Out: 125 to 200 Amps:** No **Electrical - Fire Alarm:** No **Standalone Electrical Permit:** Yes
Progress Energy: No **Central Electric (EMC):** No **Acres:** 12.3183 **Power Co.:** DUKE **Subdivision:**
Description: PROPOSED RELOCATION OF OUTLETS, RECEPTICLES, AND SWITCHES

ELEC-012779-2022 **Type:** Electrical (Non-Residential) **District:** Sanford **Main Address:** 2919 Beechtree Dr
Status: Issued **Workclass:** Alteration **Project:** **Parcel:** 9644-43-1973-00 Sanford, NC 27330
Application Date: 01/14/2022 **Issue Date:** 01/14/2022 **Expiration:** 01/25/2023 **Last Inspection:** 01/25/2022 **Finaled Date:**
Zone: R-20 R-20 **Sq Ft:** 3,588 **Valuation:** $655,200.00 **Assigned To:**
Additional Info:
Building Permit #: 12460 **Duke Energy:** Yes **Service Change Out: Up to 100 Amps:** No **Service Change Out: 125 to 200 Amps:** No **Electrical - Fire Alarm:** No
Standalone Electrical Permit: No **Progress Energy:** No **Central Electric (EMC):** No **Total Amperage:** 200 **Number of Sub-panels:** 1
Acres: 17.95 **Power Co.:** DUKE **Subdivision:**
Description: 200 AMPS AND 1 SUBPANEL INSTALL FOR PROPOSED INTERIOR RENOVATIONS TO 3RD FLOOR OF EXISTING MEDICAL OFFICE BUILDING

ELEC-012789-2022 **Type:** Electrical (Non-Residential) **District:** Sanford **Main Address:** 226 Linden Ave
Status: Issued **Workclass:** Alteration **Project:** **Parcel:** 9643-82-1136-00 Sanford, NC 27330
Application Date: 01/14/2022 **Issue Date:** 01/18/2022 **Expiration:** 01/26/2023 **Last Inspection:** 01/26/2022 **Finaled Date:**
Zone: R-6 R-6 **Sq Ft:** 0 **Valuation:** $0.00 **Assigned To:**
Additional Info:
Building Permit #: BLDC-009850-2021 **Contractor PIN #:** 31628-U **Duke Energy:** No **Service Change Out: Up to 100 Amps:** No **Service Change Out: 125 to 200 Amps:** No
Number of Room Additions: 0 **Number of Modular Homes:** 0 **Number of Signs (Sign WC Only):** 0 **Electrical - Fire Alarm:** No **Standalone Electrical Permit:** No
Progress Energy: No **Central Electric (EMC):** Yes **Total Amperage:** 400 **Number of Special Outlets:** 0 **Number of Sub-panels:** 6
Acres: 0.57 **Subdivision:**
Description: UPFIT OF AN EXISTING STRUCTURE

ELEC-012821-2022 **Type:** Electrical (Non-Residential) **District:** Sanford **Main Address:** 1924 S Horner Blvd
Status: Issued **Workclass:** Power Restoration **Project:** **Parcel:** 9652-43-3881-00 Sanford, NC 27330
Application Date: 01/18/2022 **Issue Date:** 01/18/2022 **Expiration:** 07/17/2022 **Last Inspection:** **Finaled Date:**
Zone: C-2 C-2 General Commercial **Sq Ft:** 0 **Valuation:** $0.00 **Assigned To:**
Additional Info:
Building Permit #: **Contractor PIN #:** 23150-U **Duke Energy:** Yes **Service Change Out: Up to 100 Amps:** No **Service Change Out: 125 to 200 Amps:** No
Number of Room Additions: 0 **Number of Modular Homes:** 0 **Number of Signs (Sign WC Only):** 0 **Electrical - Fire Alarm:** No **Standalone Electrical Permit:** Yes
Progress Energy: No **Central Electric (EMC):** No **Total Amperage:** 0 **Number of Special Outlets:** 0 **Number of Sub-panels:** 0
Acres: 7.4137 **Subdivision:**
Description: Power restoration

ELEC-012827-2022 **Type:** Electrical (Non-Residential) **District:** Sanford **Main Address:** 2720 Horner
Status: Issued **Workclass:** New Construction **Project:** **Parcel:** 9652-70-9795-00 Sanford, NC 27332
Application Date: 01/19/2022 **Issue Date:** 01/24/2022 **Expiration:** 07/23/2022 **Last Inspection:** **Finaled Date:**
Zone: LI LI Light Industrial **Sq Ft:** 0 **Valuation:** $0.00 **Assigned To:**
Additional Info:
Building Permit #: BLDC-012649-2022 **Contractor PIN #:** U34173 **Duke Energy:** No **Service Change Out: Up to 100 Amps:** No **Service Change Out: 125 to 200 Amps:** No
Number of Room Additions: 0 **Number of Modular Homes:** 0 **Number of Signs (Sign WC Only):** 0 **Electrical - Fire Alarm:** No **Standalone Electrical Permit:** No
Progress Energy: No **Central Electric (EMC):** No **Total Amperage:** 800 **Number of Special Outlets:** 0 **Number of Sub-panels:** 2
Acres: 1.08208 **Subdivision:**

ELEC-012851-2022 **Type:** Electrical (Non-Residential) **District:** Broadway ETJ **Main Address:** 691 Seminole Rd
Status: Issued **Workclass:** Repair **Project:** **Parcel:** Broadway, NC 27505
Application Date: 01/20/2022 **Issue Date:** 01/20/2022 **Expiration:** 07/19/2022 **Last Inspection:** **Finaled Date:**
Zone: **Sq Ft:** 0 **Valuation:** $0.00 **Assigned To:**
Additional Info:
Duke Energy: No **Service Change Out: Up to 100 Amps:** No **Service Change Out: 125 to 200 Amps:** No **Electrical - Fire Alarm:** No **Standalone Electrical Permit:** No
Progress Energy: No **Central Electric (EMC):** No
Description: PANEL MOVED/ REPAIR -- PARCEL #:9681-66-5991-00

ELEC-012880-2022 **Type:** Electrical (Non-Residential) **District:** Sanford **Main Address:** 3000 S Horner Blvd
Status: Issued **Workclass:** Alteration **Project:** **Parcel:** 9651-89-7216-00 Sanford, NC 27332
Application Date: 01/25/2022 **Issue Date:** 01/25/2022 **Expiration:** 07/24/2022 **Last Inspection:** **Finaled Date:**
Zone: C-2 C-2 General Commercial **Sq Ft:** 0 **Valuation:** $0.00 **Assigned To:**
Additional Info:
Building Permit #: **Contractor PIN #:** 23197 **Duke Energy:** Yes **Service Change Out: Up to 100 Amps:** No **Service Change Out: 125 to 200 Amps:** No
Number of Room Additions: 0 **Number of Modular Homes:** 0 **Number of Signs (Sign WC Only):** 0 **Electrical - Fire Alarm:** No **Standalone Electrical Permit:** Yes
Progress Energy: No **Central Electric (EMC):** No **Total Amperage:** 100 **Number of Special Outlets:** 0 **Number of Sub-panels:** 0
Acres: 22.81 **Power Co.:** DUKE **Subdivision:**
Description: Electrical disconnect/reconnect of atm

ELEC-012905-2022 **Type:** Electrical (Non-Residential) **District:** Sanford **Main Address:** 3105 Hal Siler Dr
Status: Complete **Workclass:** Miscellaneous **Project:** **Parcel:** 9651-97-4447-00 Sanford, NC 27332
Application Date: 01/26/2022 **Issue Date:** 01/26/2022 **Expiration:** 01/28/2023 **Last Inspection:** 01/28/2022 **Finaled Date:** 01/28/2022
Zone: LI LI Light Industrial **Sq Ft:** 0 **Valuation:** $0.00 **Assigned To:**
Additional Info:
Duke Energy: Yes **Service Change Out: Up to 100 Amps:** No **Service Change Out: 125 to 200 Amps:** No **Electrical - Fire Alarm:** No **Standalone Electrical Permit:** No
Progress Energy: No **Central Electric (EMC):** No **Acres:** 0.720014 **Power Co.:** DUKE **Subdivision:** WILSON, WALKER INDUSTRIAL PARK
Description: DISCONNECT METER TO REPLACE POLE STRUCTURE FOR RECONNECT

ELEC-012920-2022 **Type:** Electrical (Non-Residential) **District:** Sanford **Main Address:** 310 Court Sq
Status: Issued **Workclass:** Alteration **Project:** **Parcel:** 9652-14-3661-00 Sanford, NC 27330
Application Date: 01/28/2022 **Issue Date:** 01/28/2022 **Expiration:** 07/27/2022 **Last Inspection:** **Finaled Date:**
Zone: OI OI **Sq Ft:** 0 **Valuation:** $0.00 **Assigned To:**
Additional Info:
Duke Energy: No **Service Change Out: Up to 100 Amps:** No **Service Change Out: 125 to 200 Amps:** No **Electrical - Fire Alarm:** No **Standalone Electrical Permit:** No
Progress Energy: No **Central Electric (EMC):** No **Acres:** 0.246292 **Power Co.:** DUKE **Subdivision:** COURT SQUARE
Description: ADDING OUTLET FOR TANKLESS WATER HEATER

PERMITS ISSUED FOR ELECTRICAL (NON-RESIDENTIAL): 13

ELECTRICAL (RESIDENTIAL)

ELER-012367-2021 **Type:** Electrical (Residential) **District:** Broadway ETJ **Main Address:** 88 Green Acres Dr
Status: Issued **Workclass:** New Construction **Project:** **Parcel:** Broadway, NC 27505
Application Date: 12/07/2021 **Issue Date:** 01/06/2022 **Expiration:** 01/25/2023 **Last Inspection:** 01/25/2022 **Finaled Date:**
Zone: **Sq Ft:** 0 **Valuation:** $0.00 **Assigned To:**
Additional Info:
Building Permit #: 011998-2021 **Contractor PIN #:** u-31732 **Duke Energy:** No **Service Change Out: Up to 100 Amps:** No **Service Change Out: 125 to 200 Amps:** No
Number of Room Additions: 0 **Number of Modular Homes:** 0 **Number of Signs (Sign WC Only):** 0 **Electrical - Fire Alarm:** No **Full Name:** Melanie Fernandez
Standalone Electrical Permit: No **Progress Energy:** No **Central Electric (EMC):** No **Total Amperage:** 200 **Number of Special Outlets:** 0
Number of Sub-panels: 0

Description: wiring of new construction home

ELER-012368-2021 | **Type:** Electrical (Residential) | **District:** Broadway ETJ | **Main Address:** 72 Green Acres Dr
Status: Issued | **Workclass:** New Construction | **Project:** | **Parcel:** | Broadway, NC 27505
Application Date: 12/07/2021 | **Issue Date:** 01/06/2022 | **Expiration:** 01/18/2023 | **Last Inspection:** 01/18/2022 | **Finaled Date:**
Zone: | **Sq Ft:** 0 | **Valuation:** $0.00 | **Assigned To:**
Additional Info:
Building Permit #: BRES-011999-2021 | **Contractor PIN #:** u-31732 | **Duke Energy:** No | **Service Change Out: Up to 100 Amps:** No | **Service Change Out: 125 to 200 Amps:** No
Number of Room Additions: 0 | **Number of Modular Homes:** 0 | **Number of Signs (Sign WC Only):** 0 | **Electrical - Fire Alarm:** No | **Full Name:** Melanie Fernandez
Standalone Electrical Permit: No | **Progress Energy:** No | **Central Electric (EMC):** No | **Total Amperage:** 200 | **Number of Special Outlets:** 0
Number of Sub-panels: 0
Description: wiring of new construction home

ELER-012369-2021 | **Type:** Electrical (Residential) | **District:** Broadway | **Main Address:** 83 Green Acres Dr
Status: Issued | **Workclass:** New Construction | **Project:** | **Parcel:** | Broadway, NC 27505
Application Date: 12/07/2021 | **Issue Date:** 01/06/2022 | **Expiration:** 01/27/2023 | **Last Inspection:** 01/27/2022 | **Finaled Date:**
Zone: | **Sq Ft:** 0 | **Valuation:** $0.00 | **Assigned To:**
Additional Info:
Building Permit #: BRES-012204-2021 | **Contractor PIN #:** u-31732 | **Duke Energy:** No | **Service Change Out: Up to 100 Amps:** No | **Service Change Out: 125 to 200 Amps:** No
Number of Room Additions: 0 | **Number of Modular Homes:** 0 | **Number of Signs (Sign WC Only):** 0 | **Electrical - Fire Alarm:** No | **Full Name:** Melanie Fernandez
Standalone Electrical Permit: No | **Progress Energy:** No | **Central Electric (EMC):** No | **Total Amperage:** 200 | **Number of Special Outlets:** 0
Number of Sub-panels: 0
Description: wiring new construction home

ELER-012372-2021 | **Type:** Electrical (Residential) | **District:** Lee County (Unincorporated) | **Main Address:** 205 Kensington Dr
Status: Issued | **Workclass:** New Construction | **Project:** | **Parcel:** | Sanford, NC 27332
Application Date: 12/07/2021 | **Issue Date:** 01/13/2022 | **Expiration:** 01/19/2023 | **Last Inspection:** 01/19/2022 | **Finaled Date:**
Zone: | **Sq Ft:** 0 | **Valuation:** $0.00 | **Assigned To:**
Additional Info:
Building Permit #: BRES-012112-2021 | **Contractor PIN #:** 31732 | **Duke Energy:** No | **Service Change Out: Up to 100 Amps:** No | **Service Change Out: 125 to 200 Amps:** No
Number of Room Additions: 0 | **Number of Modular Homes:** 0 | **Number of Signs (Sign WC Only):** 0 | **Electrical - Fire Alarm:** No | **Full Name:** Melanie Fernandez
Standalone Electrical Permit: No | **Progress Energy:** No | **Central Electric (EMC):** No | **Total Amperage:** 200 | **Number of Special Outlets:** 0
Number of Sub-panels: 0
Description: wiring new construction home

ELER-012374-2021 | **Type:** Electrical (Residential) | **District:** Lee County (Unincorporated) | **Main Address:** 136 Lexington Dr
Status: Issued | **Workclass:** New Construction | **Project:** | **Parcel:** | Sanford, NC 27332
Application Date: 12/07/2021 | **Issue Date:** 01/13/2022 | **Expiration:** 07/12/2022 | **Last Inspection:** | **Finaled Date:**
Zone: | **Sq Ft:** 0 | **Valuation:** $0.00 | **Assigned To:**
Additional Info:
Building Permit #: BRES-012117-2021 | **Contractor PIN #:** 31732 | **Duke Energy:** No | **Service Change Out: Up to 100 Amps:** No | **Service Change Out: 125 to 200 Amps:** No
Number of Room Additions: 0 | **Number of Modular Homes:** 0 | **Number of Signs (Sign WC Only):** 0 | **Electrical - Fire Alarm:** No | **Full Name:** Melanie Fernandez
Standalone Electrical Permit: No | **Progress Energy:** No | **Central Electric (EMC):** No | **Total Amperage:** 200 | **Number of Special Outlets:** 0

Number of Sub-panels: 0
Description: wiring new construction home

ELER-012375-2021 | **Type:** Electrical (Residential) | **District:** Lee County (Unincorporated) | **Main Address:** 120 Lexington Dr
Status: Issued | **Workclass:** New Construction | **Project:** | **Parcel:** | Sanford, NC 27332
Application Date: 12/07/2021 | **Issue Date:** 01/13/2022 | **Expiration:** 01/18/2023 | **Last Inspection:** 01/18/2022 | **Finaled Date:**
Zone: | **Sq Ft:** 0 | **Valuation:** $0.00 | **Assigned To:**
Additional Info:
Building Permit #: BRES-012110-2021 | **Contractor PIN #:** 31732 | **Duke Energy:** No | **Service Change Out: Up to 100 Amps:** No | **Service Change Out: 125 to 200 Amps:** No
Number of Room Additions: 0 | **Number of Modular Homes:** 0 | **Number of Signs (Sign WC Only):** 0 | **Electrical - Fire Alarm:** No | **Full Name:** Melanie Fernandez
Standalone Electrical Permit: No | **Progress Energy:** No | **Central Electric (EMC):** No | **Total Amperage:** 200 | **Number of Special Outlets:** 0
Number of Sub-panels: 0
Description: wiring new construction home

ELER-012387-2021 | **Type:** Electrical (Residential) | **District:** Lee County (Unincorporated) | **Main Address:** 124 Lexington Dr
Status: Issued | **Workclass:** New Construction | **Project:** | **Parcel:** | Sanford, NC 27332
Application Date: 12/08/2021 | **Issue Date:** 01/13/2022 | **Expiration:** 01/27/2023 | **Last Inspection:** 01/27/2022 | **Finaled Date:**
Zone: | **Sq Ft:** 0 | **Valuation:** $0.00 | **Assigned To:**
Additional Info:
Building Permit #: BRES-012114-2021 | **Contractor PIN #:** u-31732 | **Duke Energy:** No | **Service Change Out: Up to 100 Amps:** No | **Service Change Out: 125 to 200 Amps:** No
Number of Room Additions: 0 | **Number of Modular Homes:** 0 | **Number of Signs (Sign WC Only):** 0 | **Electrical - Fire Alarm:** No | **Full Name:** Melanie Fernandez
Standalone Electrical Permit: No | **Progress Energy:** No | **Central Electric (EMC):** No | **Total Amperage:** 200 | **Number of Special Outlets:** 0
Number of Sub-panels: 0
Description: wiring new construction home

ELER-012389-2021 | **Type:** Electrical (Residential) | **District:** Lee County (Unincorporated) | **Main Address:** 220 Kensington Dr
Status: Issued | **Workclass:** New Construction | **Project:** | **Parcel:** | Sanford, NC 27332
Application Date: 12/08/2021 | **Issue Date:** 01/13/2022 | **Expiration:** 01/19/2023 | **Last Inspection:** 01/19/2022 | **Finaled Date:**
Zone: | **Sq Ft:** 0 | **Valuation:** $0.00 | **Assigned To:**
Additional Info:
Building Permit #: BRES-012113-2021 | **Contractor PIN #:** u-31732 | **Duke Energy:** No | **Service Change Out: Up to 100 Amps:** No | **Service Change Out: 125 to 200 Amps:** No
Number of Room Additions: 0 | **Number of Modular Homes:** 0 | **Number of Signs (Sign WC Only):** 0 | **Electrical - Fire Alarm:** No | **Full Name:** Melanie Fernandez
Standalone Electrical Permit: No | **Progress Energy:** No | **Central Electric (EMC):** No | **Total Amperage:** 200 | **Number of Special Outlets:** 0
Number of Sub-panels: 0
Description: wiring new construction home

ELER-012578-2021 | **Type:** Electrical (Residential) | **District:** Sanford | **Main Address:** 314 Queen Rd
Status: Complete | **Workclass:** Repair | **Project:** | **Parcel:** 9643-42-0384-00 | Sanford, NC 27330
Application Date: 12/27/2021 | **Issue Date:** 01/04/2022 | **Expiration:** 01/06/2023 | **Last Inspection:** 01/06/2022 | **Finaled Date:** 01/06/2022
Zone: R-12 R-12 Residential Mixed | **Sq Ft:** 0 | **Valuation:** $0.00 | **Assigned To:**
Additional Info:
Building Permit #: | **Contractor PIN #:** 15793 | **Duke Energy:** Yes | **Service Change Out: Up to 100 Amps:** Yes | **Service Change Out: 125 to 200 Amps:** No
Number of Room Additions: 0 | **Number of Modular Homes:** 0 | **Number of Signs (Sign WC Only):** 0 | **Electrical - Fire Alarm:** No | **Acknowledgment:** Yes

Full Name: ERIN VARNER | **Standalone Electrical Permit:** No | **Progress Energy:** No | **Central Electric (EMC):** No | **Total Amperage:** 100
Number of Special Outlets: 0 | **Number of Sub-panels:** 0 | **Acres:** 0.544939 | **Subdivision:**
Description: OVERHEAD SERVICE REPAIR
FUSE PANEL TO BE REPLACED WITH BREAKER PANEL.

ELER-012624-2022 | **Type:** Electrical (Residential) | **District:** Lee County (Unincorporated) | **Main Address:** 8049 Sheriff Watson Rd
Status: Issued | **Workclass:** Manufactured Home | **Project:** | **Parcel:** 9547-65-1210-00 | Sanford, NC 27332
Application Date: 01/03/2022 | **Issue Date:** 01/03/2022 | **Expiration:** 07/02/2022 | **Last Inspection:** | **Finaled Date:**
Zone: RA/MH RA/MH | **Sq Ft:** 0 | **Valuation:** $0.00 | **Assigned To:**
Additional Info:
Building Permit #: 012379 | **Duke Energy:** No | **Service Change Out: Up to 100 Amps:** No | **Service Change Out: 125 to 200 Amps:** No | **Manufactured Home Subclass:** Single-Wide
Electrical - Fire Alarm: No | **Standalone Electrical Permit:** No | **Progress Energy:** No | **Central Electric (EMC):** Yes | **Acres:** 1.87342
Power Co.: CEMC | **Subdivision:** HUNTERS RIDGE
Description: WIRING PROPOSED 14'X76' SINGLE-WIDE SET UP

ELER-012627-2022 | **Type:** Electrical (Residential) | **District:** Sanford | **Main Address:** 716 Bucktail Ln
Status: Issued | **Workclass:** New Construction | **Project:** | **Parcel:** 9632-19-5754-00 | Sanford, NC 27330
Application Date: 01/03/2022 | **Issue Date:** 01/03/2022 | **Expiration:** 01/19/2023 | **Last Inspection:** 01/19/2022 | **Finaled Date:**
Zone: CZ CZ | **Sq Ft:** 3,736 | **Valuation:** $395,000.00 | **Assigned To:**
Additional Info:
Duke Energy: No | **Service Change Out: Up to 100 Amps:** No | **Service Change Out: 125 to 200 Amps:** No | **Electrical - Fire Alarm:** No | **Standalone Electrical Permit:** No
Progress Energy: No | **Central Electric (EMC):** No | **Total Amperage:** 135 | **Watershed:** DEEP RIVER / LEE COUNTY | **Acres:** 0.629427
Power Co.: DUKE | **Subdivision:** CARBONTON COVE
Description: NEW SFD - LOT 18

ELER-012628-2022 | **Type:** Electrical (Residential) | **District:** Sanford | **Main Address:** 608 W Courtland Dr
Status: Issued | **Workclass:** New Construction | **Project:** LAWTON RIDGE | **Parcel:** 9652-03-6197-00 | Sanford, NC 27330
Application Date: 01/03/2022 | **Issue Date:** 01/03/2022 | **Expiration:** 07/02/2022 | **Last Inspection:** | **Finaled Date:**
Zone: R-12 R-12 Residential Mixed | **Sq Ft:** 2,291 | **Valuation:** $245,000.00 | **Assigned To:**
Additional Info:
Duke Energy: No | **Service Change Out: Up to 100 Amps:** No | **Service Change Out: 125 to 200 Amps:** No | **Electrical - Fire Alarm:** No | **Standalone Electrical Permit:** No
Progress Energy: No | **Central Electric (EMC):** No | **Total Amperage:** 135 | **Acres:** 0.5 | **Power Co.:** DUKE
Subdivision: LAWTON RIDGE
Description: NEW SFD - LOT 4

ELER-012629-2022 | **Type:** Electrical (Residential) | **District:** Sanford | **Main Address:** 602 W Courtland Dr
Status: Issued | **Workclass:** New Construction | **Project:** LAWTON RIDGE | **Parcel:** 9652-03-6286-00 | Sanford, NC 27330
Application Date: 01/03/2022 | **Issue Date:** 01/03/2022 | **Expiration:** 01/06/2023 | **Last Inspection:** 01/06/2022 | **Finaled Date:**
Zone: R-12 R-12 Residential Mixed | **Sq Ft:** 2,607 | **Valuation:** $245,000.00 | **Assigned To:**
Additional Info:
Duke Energy: No | **Service Change Out: Up to 100 Amps:** No | **Service Change Out: 125 to 200 Amps:** No | **Electrical - Fire Alarm:** No | **Standalone Electrical Permit:** No
Progress Energy: No | **Central Electric (EMC):** No | **Total Amperage:** 135 | **Acres:** 0.53 | **Power Co.:** DUKE

Subdivision: LAWTON RIDGE
Description: NEW SFD - LOT 6

ELER-012630-2022
Status: Issued
Application Date: 01/03/2022
Zone: R-12 R-12 Residential Mixed
Additional Info:
Duke Energy: No
Progress Energy: No
Subdivision: LAWTON RIDGE
Description: NEW SFD - LOT 5

Type: Electrical (Residential)
Workclass: New Construction
Issue Date: 01/03/2022
Sq Ft: 2,290
Service Change Out: Up to 100 Amps: No
Central Electric (EMC): No

District: Sanford
Project: LAWTON RIDGE
Expiration: 01/11/2023
Valuation: $245,000.00
Service Change Out: 125 to 200 Amps: No
Total Amperage: 135

Main Address: 604 W Courtland Dr Sanford, NC 27330
Parcel: 9652-03-6197-00
Last Inspection: 01/11/2022
Electrical - Fire Alarm: No
Acres: 0.5

Finaled Date:
Assigned To:
Standalone Electrical Permit: No
Power Co.: DUKE

ELER-012632-2022
Status: Issued
Application Date: 01/03/2022
Zone: RA RA Residential Agricultural
Additional Info:
Duke Energy: No
Progress Energy: No
Subdivision: BOCA ESTATES
Description: NEW SFD - LOT 29

Type: Electrical (Residential)
Workclass: New Construction
Issue Date: 01/03/2022
Sq Ft: 5,147
Service Change Out: Up to 100 Amps: No
Central Electric (EMC): No

District: Lee County (Unincorporated)
Project:
Expiration: 01/19/2023
Valuation: $228,769.00
Service Change Out: 125 to 200 Amps: No
Total Amperage: 200

Main Address: 253 Saintsbury Pl Sanford, NC 27330
Parcel: 9519-68-7998-00
Last Inspection: 01/19/2022
Electrical - Fire Alarm: No
Acres: 1.03276

Finaled Date:
Assigned To:
Standalone Electrical Permit: No
Power Co.: DUKE

ELER-012633-2022
Status: Issued
Application Date: 01/03/2022
Zone: R-20 R-20
Additional Info:
Duke Energy: No
Progress Energy: No
Subdivision: WOODBURY FARM
Description: NEW SFD- LOT 16

Type: Electrical (Residential)
Workclass: New Construction
Issue Date: 01/03/2022
Sq Ft: 3,072
Service Change Out: Up to 100 Amps: No
Central Electric (EMC): No

District: Lee County (Unincorporated)
Project: WOODBURY FARM
Expiration: 07/02/2022
Valuation: $125,000.00
Service Change Out: 125 to 200 Amps: No
Total Amperage: 200

Main Address: 165 Edgefield Dr Sanford, NC 27332
Parcel: 9650-69-3881-00
Last Inspection:
Electrical - Fire Alarm: No
Acres: 4.76

Finaled Date:
Assigned To:
Standalone Electrical Permit: No
Power Co.: DUKE

ELER-012634-2022
Status: Issued
Application Date: 01/03/2022
Zone: R-20 R-20
Additional Info:
Duke Energy: No
Progress Energy: No
Subdivision: WOODBURY FARM
Description: NEW SFD- LOT 17

Type: Electrical (Residential)
Workclass: New Construction
Issue Date: 01/03/2022
Sq Ft: 3,438
Service Change Out: Up to 100 Amps: No
Central Electric (EMC): No

District: Lee County (Unincorporated)
Project: WOODBURY FARMS
Expiration: 07/02/2022
Valuation: $0.00
Service Change Out: 125 to 200 Amps: No
Total Amperage: 200

Main Address: 160 Edgefield Dr Sanford, NC 27332
Parcel: 9650-69-5677-00
Last Inspection:
Electrical - Fire Alarm: No
Acres: 4.49

Finaled Date:
Assigned To:
Standalone Electrical Permit: No
Power Co.: DUKE

ELER-012635-2022 | **Type:** Electrical (Residential) | **District:** Lee County (Unincorporated) | **Main Address:** 735 Greenwood Rd
Status: Issued | **Workclass:** Alteration | **Project:** | **Parcel:** 9549-45-1267-00 | Sanford, NC 27332
Application Date: 01/04/2022 | **Issue Date:** 01/13/2022 | **Expiration:** 01/18/2023 | **Last Inspection:** 01/18/2022 | **Finaled Date:**
Zone: RR RR | **Sq Ft:** 0 | **Valuation:** $0.00 | **Assigned To:**
Additional Info:
Building Permit #: | **Contractor PIN #:** 17702-L | **Duke Energy:** No | **Service Change Out: Up to 100 Amps:** No | **Service Change Out: 125 to 200 Amps:** Yes
Number of Room Additions: 0 | **Number of Modular Homes:** 0 | **Number of Signs (Sign WC Only):** 0 | **Electrical - Fire Alarm:** No | **Acknowledgment:** Yes
Full Name: Malcolm David McCracken | **Standalone Electrical Permit:** Yes | **Progress Energy:** No | **Central Electric (EMC):** Yes | **Total Amperage:** 200
Number of Special Outlets: 0 | **Number of Sub-panels:** 1 | **Acres:** 0.698101 | **Subdivision:**
Description: Replace devices, fixtures, add smoke detectors, upgrade service to 200 amp with new interior panel, wiring for heat pump, water heater, stove and dryer. Some work had been started by others, replace as much existing wiring as possible

---

ELER-012645-2022 | **Type:** Electrical (Residential) | **District:** Broadway ETJ | **Main Address:** 102 Seminole Fields
Status: Issued | **Workclass:** New Construction | **Project:** | **Parcel:** | Broadway 27505
Application Date: 01/04/2022 | **Issue Date:** 01/05/2022 | **Expiration:** 01/06/2023 | **Last Inspection:** 01/06/2022 | **Finaled Date:**
Zone: | **Sq Ft:** 0 | **Valuation:** $0.00 | **Assigned To:**
Additional Info:
Building Permit #: BRES-011651-2021 | **Contractor PIN #:** u-31732 | **Duke Energy:** No | **Service Change Out: Up to 100 Amps:** No | **Service Change Out: 125 to 200 Amps:** No
Number of Room Additions: 0 | **Number of Modular Homes:** 0 | **Number of Signs (Sign WC Only):** 0 | **Electrical - Fire Alarm:** No | **Full Name:** Melanie Fernandez
Standalone Electrical Permit: No | **Progress Energy:** No | **Central Electric (EMC):** No | **Total Amperage:** 200 | **Number of Special Outlets:** 0
Number of Sub-panels: 0
Description: wiring new construction home

ELER-012652-2022* | **Type:** Electrical (Residential) | **District:** Lee County (Unincorporated) | **Main Address:** 166 Willow Creek Rd
Status: Issued | **Workclass:** Accessory Structure | **Project:** | **Parcel:** 9657-91-6092-00 | Sanford, NC 27330
Application Date: 01/05/2022 | **Issue Date:** 01/05/2022 | **Expiration:** 01/24/2023 | **Last Inspection:** 01/24/2022 | **Finaled Date:**
Zone: RA RA Residential Agricultural | **Sq Ft:** 1,188 | **Valuation:** $70,000.00 | **Assigned To:**
Additional Info:
Duke Energy: No | **Service Change Out: Up to 100 Amps:** No | **Service Change Out: 125 to 200 Amps:** No | **Electrical - Fire Alarm:** No | **Standalone Electrical Permit:** No
Progress Energy: No | **Central Electric (EMC):** No | **Watershed:** CAPE FEAR / LEE COUNTY | **Acres:** 9.65346 | **Power Co.:** DUKE
Subdivision: WILLOW CREEK
Description: WIRING 44'x27' DETACHED GARAGE (ACCESSORY BUILDING)

PERMIT EXPIRED ON 6/9/2021. OWNER CAME IN TO REACTIVATE PERMIT ON 1/5/2022. REACTIVATION FEE WILL APPLY. CG

ELER-012660-2022 | **Type:** Electrical (Residential) | **District:** Sanford | **Main Address:** 616 Sunset Dr
Status: Complete | **Workclass:** Repair | **Project:** | **Parcel:** 9642-39-5626-00 | Sanford, NC 27330
Application Date: 01/05/2022 | **Issue Date:** 01/05/2022 | **Expiration:** 01/05/2023 | **Last Inspection:** 01/05/2022 | **Finaled Date:** 01/06/2022
Zone: R-20 R-20 | **Sq Ft:** 0 | **Valuation:** $0.00 | **Assigned To:**
Additional Info:
Building Permit #: | **Contractor PIN #:** 15793L | **Duke Energy:** Yes | **Service Change Out: Up to 100 Amps:** No | **Service Change Out: 125 to 200 Amps:** No
Number of Room Additions: 0 | **Number of Modular Homes:** 0 | **Number of Signs (Sign WC Only):** 0 | **Electrical - Fire Alarm:** No | **Acknowledgment:** Yes
Full Name: Jason Howard | **Standalone Electrical Permit:** No | **Progress Energy:** No | **Central Electric (EMC):** No | **Total Amperage:** 0

Number of Special Outlets: 0 **Number of Sub-panels:** 0 **Acres:** 0.347477 **Subdivision:** MCIVER PARK
Description: Put back up overhead service mast.

ELER-012671-2022 **Type:** Electrical (Residential) **District:** Lee County (Unincorporated) **Main Address:** 436 Phil Johnson Rd
Status: Issued **Workclass:** Alteration **Project:** **Parcel:** 9656-28-0671-00 Sanford, NC 27330
Application Date: 01/06/2022 **Issue Date:** 01/07/2022 **Expiration:** 07/06/2022 **Last Inspection:** **Finaled Date:**
Zone: RA RA Residential Agricultural **Sq Ft:** 0 **Valuation:** $20,000.00 **Assigned To:**
Additional Info:
Duke Energy: No **Service Change Out: Up to 100 Amps:** No **Service Change Out: 125 to 200 Amps:** No **Electrical - Fire Alarm:** No **Standalone Electrical Permit:** No
Progress Energy: No **Central Electric (EMC):** No **Acres:** 3.20525 **Power Co.:** DUKE **Subdivision:**
Description: ELECTRICAL RACEWAY FOR PROPOSED ENCLOSURE OF EXSITING PORCH

ELER-012673-2022 **Type:** Electrical (Residential) **District:** Lee County (Unincorporated) **Main Address:** 3030 Henley Rd
Status: Issued **Workclass:** New Construction **Project:** **Parcel:** 9611-82-3288-00 Sanford, NC 27330
Application Date: 01/06/2022 **Issue Date:** 01/06/2022 **Expiration:** 07/05/2022 **Last Inspection:** **Finaled Date:**
Zone: RA RA Residential Agricultural **Sq Ft:** 4,105 **Valuation:** $340,000.00 **Assigned To:**
Additional Info:
Duke Energy: No **Service Change Out: Up to 100 Amps:** No **Service Change Out: 125 to 200 Amps:** No **Electrical - Fire Alarm:** No **Standalone Electrical Permit:** No
Progress Energy: No **Central Electric (EMC):** No **Total Amperage:** 200 **Acres:** 12.92 **Power Co.:** DUKE
Subdivision:
Description: NEW SFD - TRACT C
PER JEANETTE B. IN GIS, ADDRESS CHANGED TO 3030 FROM 3060 HENLEY RD. ON 4/19/2021. CG

ELER-012674-2022 **Type:** Electrical (Residential) **District:** Lee County (Unincorporated) **Main Address:** 196 Canyon Creek Dr
Status: Issued **Workclass:** New Construction **Project:** **Parcel:** 9611-51-3805-00 Sanford, NC 27330
Application Date: 01/06/2022 **Issue Date:** 01/06/2022 **Expiration:** 01/18/2023 **Last Inspection:** 01/18/2022 **Finaled Date:**
Zone: RR RR **Sq Ft:** 0 **Valuation:** $0.00 **Assigned To:**
Additional Info:
Building Permit #: 11819 **Contractor PIN #:** 27098 **Duke Energy:** Yes **Service Change Out: Up to 100 Amps:** No **Service Change Out: 125 to 200 Amps:** No
Number of Room Additions: 0 **Number of Modular Homes:** 0 **Number of Signs (Sign WC Only):** 0 **Electrical - Fire Alarm:** No **Acknowledgment:** Yes
Full Name: MICHAEL FRITTELLI **Standalone Electrical Permit:** No **Progress Energy:** No **Central Electric (EMC):** No **Total Amperage:** 200
Number of Special Outlets: 0 **Number of Sub-panels:** 0 **Acres:** 0.991048 **Subdivision:** CANYON CREEK
Description: WIRING OF NEW SFD (200AMPS)

ELER-012675-2022 **Type:** Electrical (Residential) **District:** Sanford ETJ **Main Address:** 708 Clearwater Dr
Status: Complete **Workclass:** Power Restoration **Project:** **Parcel:** 9652-39-9141-00 Sanford, NC 27330
Application Date: 01/06/2022 **Issue Date:** 01/06/2022 **Expiration:** 01/07/2023 **Last Inspection:** 01/07/2022 **Finaled Date:** 01/07/2022
Zone: R-6 R-6 **Sq Ft:** 0 **Valuation:** $0.00 **Assigned To:**
Additional Info:
Duke Energy: No **Service Change Out: Up to 100 Amps:** No **Service Change Out: 125 to 200 Amps:** No **Electrical - Fire Alarm:** No **Standalone Electrical Permit:** No
Progress Energy: No **Central Electric (EMC):** No **Acres:** 0.325389 **Power Co.:** DUKE **Subdivision:** FAIRVIEW VILLAGE
Description: POWER RESTORATION

ELER-012687-2022 **Type:** Electrical (Residential) **District:** Sanford **Main Address:** 307 W Chisholm St
Status: Issued **Workclass:** Alteration **Project:** **Parcel:** 9643-51-0071-00 Sanford, NC 27330
Application Date: 01/07/2022 **Issue Date:** 01/07/2022 **Expiration:** 07/06/2022 **Last Inspection:** **Finaled Date:**
Zone: R-6 R-6 **Sq Ft:** 0 **Valuation:** $50,000.00 **Assigned To:**
Additional Info:
Duke Energy: No **Service Change Out: Up to 100 Amps:** No **Service Change Out: 125 to 200 Amps:** No **Electrical - Fire Alarm:** No **Standalone Electrical Permit:** No
Progress Energy: No **Central Electric (EMC):** No **Acres:** 0.156876 **Power Co.:** DUKE **Historic District:** ROSEMONT-MCKIVER
Subdivision: ROSEMONT
Description: INTERIOR AND EXTERIOR RENOVATIONS********** THIS HOME IS WITHIN THE HISTORIC DISTRICT PLEASE ADVISE LIZ WHITMORE WHEN FINAL IS SCHEDULED

ELER-012688-2022 **Type:** Electrical (Residential) **District:** Lee County (Unincorporated) **Main Address:** 5189 Sugar Maple Rd
Status: Issued **Workclass:** New Construction **Project:** **Parcel:** 9538-19-2646-00 Sanford, NC 27332
Application Date: 01/07/2022 **Issue Date:** 01/07/2022 **Expiration:** 01/11/2023 **Last Inspection:** 01/11/2022 **Finaled Date:**
Zone: RA RA Residential Agricultural **Sq Ft:** 2,950 **Valuation:** $185,000.00 **Assigned To:**
Additional Info:
Duke Energy: No **Service Change Out: Up to 100 Amps:** No **Service Change Out: 125 to 200 Amps:** No **Electrical - Fire Alarm:** No **Standalone Electrical Permit:** No
Progress Energy: No **Central Electric (EMC):** No **Total Amperage:** 200 **Watershed:** LITTLE RIVER / LEE COUNTY **Acres:** 3.79
Power Co.: DUKE **Subdivision:**
Description: NEW SFD

ELER-012689-2022 **Type:** Electrical (Residential) **District:** Sanford **Main Address:** 1820 Sutphin
Status: Issued **Workclass:** Alteration **Project:** **Parcel:** 9633-71-5291-00 Sanford, NC 27330
Application Date: 01/07/2022 **Issue Date:** 01/07/2022 **Expiration:** 01/11/2023 **Last Inspection:** 01/11/2022 **Finaled Date:**
Zone: R-20 R-20 **Sq Ft:** 0 **Valuation:** $0.00 **Assigned To:**
Additional Info:
Building Permit #: 11970 **Contractor PIN #:** 32868 **Duke Energy:** Yes **Service Change Out: Up to 100 Amps:** No **Service Change Out: 125 to 200 Amps:** No
Number of Room Additions: 0 **Number of Modular Homes:** 0 **Number of Signs (Sign WC Only):** 0 **Electrical - Fire Alarm:** No **Acknowledgment:** Yes
Full Name: Jorge A Cerna **Standalone Electrical Permit:** Yes **Progress Energy:** No **Central Electric (EMC):** No **Total Amperage:** 0
Number of Special Outlets: 0 **Number of Sub-panels:** 0 **Acres:** 0.509494 **Subdivision:** CARBONTON HEIGHTS
Description: Electrical wiring for bath addition

ELER-012696-2022 **Type:** Electrical (Residential) **District:** Lee County (Unincorporated) **Main Address:** 584 Hickory House Rd
Status: Complete **Workclass:** Power Restoration **Project:** **Parcel:** 9641-11-3442-00 Sanford, NC 27332
Application Date: 01/10/2022 **Issue Date:** 01/11/2022 **Expiration:** 01/14/2023 **Last Inspection:** 01/14/2022 **Finaled Date:** 01/14/2022
Zone: RA RA Residential Agricultural **Sq Ft:** 0 **Valuation:** $0.00 **Assigned To:**
Additional Info:
Building Permit #: **Contractor PIN #:** 23150-U **Duke Energy:** Yes **Service Change Out: Up to 100 Amps:** No **Service Change Out: 125 to 200 Amps:** Yes
Number of Room Additions: 0 **Number of Modular Homes:** 0 **Number of Signs (Sign WC Only):** 0 **Electrical - Fire Alarm:** No **Acknowledgment:** Yes
Full Name: Elaine Stoner **Standalone Electrical Permit:** Yes **Progress Energy:** No **Central Electric (EMC):** No **Total Amperage:** 0
Number of Special Outlets: 0 **Number of Sub-panels:** 0 **Acres:** 8.54 **Power Co.:** DUKE **Subdivision:**

Description: 1. Upgrade existing 200-amp exterior meter base combination panel to a new 400-amp meter base combination panel.
2. Add a new 200-amp subpanel in upstairs unfinished area for future project, bedroom, game room, bathroom, and new HVAC system.

ELER-012705-2022 | **Type:** Electrical (Residential) | **District:** Sanford | **Main Address:** 2324 Radius Cir
Status: Complete | **Workclass:** Accessory Structure | **Project:** | **Parcel:** 9632-77-9478-00 | Sanford, NC 27330
Application Date: 01/10/2022 | **Issue Date:** 01/10/2022 | **Expiration:** 01/21/2023 | **Last Inspection:** 01/21/2022 | **Finaled Date:** 01/24/2022
Zone: R-20 R-20 | **Sq Ft:** 0 | **Valuation:** $34,000.00 | **Assigned To:**
Additional Info:
Duke Energy: No | **Service Change Out: Up to 100 Amps:** No | **Service Change Out: 125 to 200 Amps:** No | **Electrical - Fire Alarm:** No | **Standalone Electrical Permit:** No
Progress Energy: No | **Central Electric (EMC):** No | **Acres:** 1.25 | **Power Co.:** DUKE | **Subdivision:** COLONIAL ACRES
Description: METAL ACCESSORY BUILDING - GARAGE

ELER-012706-2022 | **Type:** Electrical (Residential) | **District:** Lee County (Unincorporated) | **Main Address:** 413 Cricket Hearth Dr
Status: Issued | **Workclass:** New Construction | **Project:** | **Parcel:** 9623-10-8901-00 | Sanford, NC 27330
Application Date: 01/10/2022 | **Issue Date:** 01/11/2022 | **Expiration:** 07/10/2022 | **Last Inspection:** | **Finaled Date:**
Zone: RR RR | **Sq Ft:** 0 | **Valuation:** $0.00 | **Assigned To:**
Additional Info:
Building Permit #: 012456 | **Contractor PIN #:** 27098 | **Duke Energy:** No | **Service Change Out: Up to 100 Amps:** No | **Service Change Out: 125 to 200 Amps:** No
Number of Room Additions: 0 | **Number of Modular Homes:** 0 | **Number of Signs (Sign WC Only):** 0 | **Electrical - Fire Alarm:** No | **Acknowledgment:** Yes
Full Name: MICHAEL FRITTELLI | **Standalone Electrical Permit:** No | **Progress Energy:** No | **Central Electric (EMC):** Yes | **Total Amperage:** 200
Number of Special Outlets: 0 | **Number of Sub-panels:** 0 | **Watershed:** DEEP RIVER / LEE COUNTY | **Acres:** 0.702089 | **Subdivision:** WINDING CREEK FARM
Description: WIRING OF NEW SFD (200AMPS)

ELER-012707-2022 | **Type:** Electrical (Residential) | **District:** Lee County (Unincorporated) | **Main Address:** 313 A Cricket Hearth Dr
Status: Issued | **Workclass:** New Construction | **Project:** | **Parcel:** 9623-30-1709-00 | Sanford, NC 27330
Application Date: 01/10/2022 | **Issue Date:** 01/12/2022 | **Expiration:** 07/11/2022 | **Last Inspection:** | **Finaled Date:**
Zone: RR RR | **Sq Ft:** 0 | **Valuation:** $0.00 | **Assigned To:**
Additional Info:
Building Permit #: 012455 | **Contractor PIN #:** 27098 | **Duke Energy:** No | **Service Change Out: Up to 100 Amps:** No | **Service Change Out: 125 to 200 Amps:** No
Number of Room Additions: 0 | **Number of Modular Homes:** 0 | **Number of Signs (Sign WC Only):** 0 | **Electrical - Fire Alarm:** No | **Acknowledgment:** Yes
Full Name: MICHAEL FRITTELLI | **Standalone Electrical Permit:** No | **Progress Energy:** No | **Central Electric (EMC):** Yes | **Total Amperage:** 200
Number of Special Outlets: 0 | **Number of Sub-panels:** 0 | **Watershed:** DEEP RIVER / LEE COUNTY | **Acres:** 0.676331 | **Subdivision:** WINDING CREEK FARM
Description: WIRING OF NEW SFD (200AMPS)

ELER-012708-2022 | **Type:** Electrical (Residential) | **District:** Sanford | **Main Address:** 209 Frazier Dr
Status: Complete | **Workclass:** Repair | **Project:** | **Parcel:** 9651-67-2463-00 | Sanford, NC 27332
Application Date: 01/10/2022 | **Issue Date:** 01/10/2022 | **Expiration:** 01/11/2023 | **Last Inspection:** 01/11/2022 | **Finaled Date:** 01/11/2022
Zone: R-12 R-12 Residential Mixed | **Sq Ft:** 0 | **Valuation:** $0.00 | **Assigned To:**
Additional Info:
Building Permit #: | **Contractor PIN #:** 15793-L | **Duke Energy:** Yes | **Service Change Out: Up to 100 Amps:** No | **Service Change Out: 125 to 200 Amps:** No
Number of Room Additions: 0 | **Number of Modular Homes:** 0 | **Number of Signs (Sign WC Only):** 0 | **Electrical - Fire Alarm:** No | **Acknowledgment:** Yes
Full Name: Jason Howard | **Standalone Electrical Permit:** No | **Progress Energy:** No | **Central Electric (EMC):** No | **Total Amperage:** 0

Number of Special Outlets: 0 **Number of Sub-panels:** 0 **Acres:** 0.667094 **Subdivision:**
Description: Meter base repair.

ELER-012716-2022 **Type:** Electrical (Residential) **District:** Sanford **Main Address:** 211 Carbonton Rd
Status: Complete **Workclass:** Alteration **Project:** **Parcel:** 9642-38-4521-00 Sanford, NC 27330
Application Date: 01/11/2022 **Issue Date:** 01/12/2022 **Expiration:** 01/13/2023 **Last Inspection:** 01/13/2022 **Finaled Date:** 01/13/2022
Zone: R-12 R-12 Residential Mixed **Sq Ft:** 0 **Valuation:** $0.00 **Assigned To:**
Additional Info:
Building Permit #: BRES-012175-2021 **Contractor PIN #:** 20334U **Duke Energy:** Yes **Service Change Out: Up to 100 Amps:** No **Service Change Out: 125 to 200 Amps:** No
Number of Room Additions: 0 **Number of Modular Homes:** 0 **Number of Signs (Sign WC Only):** 0 **Electrical - Fire Alarm:** No **Acknowledgment:** Yes
Full Name: Hunter Lewis **Standalone Electrical Permit:** No **Progress Energy:** No **Central Electric (EMC):** No **Total Amperage:** 0
Number of Special Outlets: 0 **Number of Sub-panels:** 0 **Acres:** 0.342631 **Subdivision:** DAVENPORT PARK
Description: installation of roof mounted solar panels (22 panels)

ELER-012721-2022 **Type:** Electrical (Residential) **District:** Lee County (Unincorporated) **Main Address:** 252 Lakeview Dr
Status: Issued **Workclass:** Addition **Project:** **Parcel:** 9660-73-7612-00 Sanford, NC 27332
Application Date: 01/11/2022 **Issue Date:** 01/11/2022 **Expiration:** 01/18/2023 **Last Inspection:** 01/18/2022 **Finaled Date:**
Zone: RR RR **Sq Ft:** 90 **Valuation:** $16,000.00 **Assigned To:**
Additional Info:
Duke Energy: No **Service Change Out: Up to 100 Amps:** No **Service Change Out: 125 to 200 Amps:** No **Number of Room Additions:** 1 **Electrical - Fire Alarm:** No
Standalone Electrical Permit: No **Progress Energy:** No **Central Electric (EMC):** No **Acres:** 0.745254 **Power Co.:** DUKE
Flood Zone: AE **Subdivision:** CAROLINA TRACE
Description: 10'X9' DECK EXPANSION ** UPDATED ON 09/09/21 - DECK EXPANSION WILL INCLUDE ROOF ** UPDATED PLANNING AND ZONING IS ATTACHED.

ELER-012725-2022 **Type:** Electrical (Residential) **District:** Lee County (Unincorporated) **Main Address:** 212 Maideline Ave
Status: Issued **Workclass:** New Construction **Project:** **Parcel:** 9640-34-2999-00 Sanford, NC 27332
Application Date: 01/11/2022 **Issue Date:** 01/11/2022 **Expiration:** 07/10/2022 **Last Inspection:** **Finaled Date:**
Zone: RA RA Residential Agricultural **Sq Ft:** 480 **Valuation:** $10,000.00 **Assigned To:**
Additional Info:
Duke Energy: No **Service Change Out: Up to 100 Amps:** No **Service Change Out: 125 to 200 Amps:** No **Electrical - Fire Alarm:** No **Standalone Electrical Permit:** No
Progress Energy: No **Central Electric (EMC):** No **Acres:** 0.898647 **Power Co.:** DUKE **Flood Zone:** AE
Subdivision: RAYS LANDING
Description: 12' X 48' ADDITION TO FRONT OF THE HOUSE ** ADDING RECEPTICLES, LIGHTS

ELER-012727-2022 **Type:** Electrical (Residential) **District:** Lee County (Unincorporated) **Main Address:** 202 Savage Ln
Status: Complete **Workclass:** Service Change **Project:** **Parcel:** 9529-63-6513-00 Sanford, NC 27332
Application Date: 01/11/2022 **Issue Date:** 01/11/2022 **Expiration:** 01/20/2023 **Last Inspection:** 01/20/2022 **Finaled Date:** 01/20/2022
Zone: RA RA Residential Agricultural **Sq Ft:** 0 **Valuation:** $0.00 **Assigned To:**
Additional Info:
Duke Energy: No **Service Change Out: Up to 100 Amps:** No **Service Change Out: 125 to 200 Amps:** Yes **Electrical - Fire Alarm:** No **Standalone Electrical Permit:** Yes
Progress Energy: No **Central Electric (EMC):** No **Watershed:** LITTLE RIVER / LEE COUNTY **Acres:** 2.19551 **Power Co.:** CEMC
Subdivision:

Description: PROPOSED 200 AMP SERVICE CHANGE FOR PROPERTY

ELER-012742-2022
Status: Complete
Application Date: 01/12/2022
Zone: R-12 R-12 Residential Mixed
Additional Info:
Building Permit #:
Number of Room Additions: 0
Full Name: Erin Varner
Number of Special Outlets: 0
Description: OH Service Repair 100amp Meter base

Type: Electrical (Residential)
Workclass: Miscellaneous
Issue Date: 01/12/2022
Sq Ft: 0
Contractor PIN #: 15793L
Number of Modular Homes: 0
Standalone Electrical Permit: Yes
Number of Sub-panels: 0

District: Sanford
Project:
Expiration: 01/12/2023
Valuation: $0.00
Duke Energy: Yes
Number of Signs (Sign WC Only): 0
Progress Energy: No
Acres: 0.211413

Main Address: 1604 Woodland Ave Sanford, NC 27330
Parcel: 9652-14-5084-00
Last Inspection: 01/12/2022
Service Change Out: Up to 100 Amps: Yes
Electrical - Fire Alarm: No
Central Electric (EMC): No
Subdivision: MONROE

Finaled Date: 01/13/2022
Assigned To:
Service Change Out: 125 to 200 Amps: No
Acknowledgment: Yes
Total Amperage: 100

ELER-012750-2022
Status: Complete
Application Date: 01/12/2022
Zone: R-6 R-6
Additional Info:
Duke Energy: No
Progress Energy: No
Subdivision: MCIVER PARK
Description: PROPOSED REMOVAL OF INTERIOR WALL & INTERIOR RENOVATION

Type: Electrical (Residential)
Workclass: Alteration
Issue Date: 01/12/2022
Sq Ft: 0
Service Change Out: Up to 100 Amps: No
Central Electric (EMC): No

District: Sanford
Project: CROSS STREET
Expiration: 01/25/2023
Valuation: $1,500.00
Service Change Out: 125 to 200 Amps: No
Acres: 0.262743

Main Address: 506 Cross St Sanford, NC 27330
Parcel: 9643-40-3397-00
Last Inspection: 01/25/2022
Electrical - Fire Alarm: No
Power Co.: DUKE

Finaled Date: 01/25/2022
Assigned To:
Standalone Electrical Permit: No
Historic District: ROSEMONT-MCKIVER

ELER-012757-2022
Status: Issued
Application Date: 01/13/2022
Zone: RR RR
Additional Info:
Building Permit #: 012041
Electrical - Fire Alarm: No
Power Co.: DUKE
Description: PROPOSED RE-WIRE OF HOME FOR INTERIOR REMODEL

Type: Electrical (Residential)
Workclass: Alteration
Issue Date: 01/13/2022
Sq Ft: 0
Duke Energy: Yes
Standalone Electrical Permit: No
Subdivision: CAROLINA TRACE

District: Lee County (Unincorporated)
Project:
Expiration: 07/12/2022
Valuation: $152,000.00
Service Change Out: Up to 100 Amps: No
Progress Energy: No

Main Address: 1417 W Carolina Dr Sanford, NC 27332
Parcel: 9670-25-6051-00
Last Inspection:
Service Change Out: 125 to 200 Amps: No
Central Electric (EMC): No

Finaled Date:
Assigned To:
Number of Room Additions: 1
Acres: 0.200135

ELER-012759-2022
Status: Issued
Application Date: 01/13/2022
Zone: R-10/MH R-10/MH
Additional Info:
Building Permit #: BRES-010251-2021
Standalone Electrical Permit: No
Power Co.: DUKE

Type: Electrical (Residential)
Workclass: New Construction
Issue Date: 01/13/2022
Sq Ft: 1,467
Duke Energy: No
Progress Energy: No
Subdivision: ACT II

District: Broadway
Project: ACT II
Expiration: 07/12/2022
Valuation: $150,000.00
Service Change Out: Up to 100 Amps: No
Central Electric (EMC): No

Main Address: 505 Hamlet Dr Broadway, NC 27505
Parcel: 9682-52-3467-00
Last Inspection:
Service Change Out: 125 to 200 Amps: No
Total Amperage: 200

Finaled Date:
Assigned To:
Electrical - Fire Alarm: No
Acres: 0.358094

Description: WIRING OF NEW SFD - LOT 13

ELER-012764-2022 | **Type:** Electrical (Residential) | **District:** Sanford | **Main Address:** 513 Summit Dr
Status: Complete | **Workclass:** Miscellaneous | **Project:** | **Parcel:** 9642-49-7558-00 | Sanford, NC 27330
Application Date: 01/13/2022 | **Issue Date:** 01/13/2022 | **Expiration:** 01/14/2023 | **Last Inspection:** 01/14/2022 | **Finaled Date:** 01/14/2022
Zone: R-12 R-12 Residential Mixed | **Sq Ft:** 0 | **Valuation:** $0.00 | **Assigned To:**
Additional Info:
Duke Energy: No | **Service Change Out: Up to 100 Amps:** No | **Service Change Out: 125 to 200 Amps:** No | **Electrical - Fire Alarm:** No | **Standalone Electrical Permit:** Yes
Progress Energy: No | **Central Electric (EMC):** No | **Acres:** 0.28603 | **Power Co.:** DUKE | **Historic District:** ROSEMONT-MCKIVER
Subdivision: MCIVER PARK
Description: REPAIR OF INSIDE PANEL

ELER-012778-2022 | **Type:** Electrical (Residential) | **District:** Lee County (Unincorporated) | **Main Address:** 8605 Harrington Pl
Status: Issued | **Workclass:** Alteration | **Project:** | **Parcel:** | Sanford, NC 27332
Application Date: 01/14/2022 | **Issue Date:** 01/14/2022 | **Expiration:** 01/21/2023 | **Last Inspection:** 01/21/2022 | **Finaled Date:**
Zone: | **Sq Ft:** 0 | **Valuation:** $0.00 | **Assigned To:**
Additional Info:
Building Permit #: 012663-2022 | **Contractor PIN #:** 338 03-I | **Duke Energy:** No | **Service Change Out: Up to 100 Amps:** No | **Service Change Out: 125 to 200 Amps:** No
Number of Room Additions: 0 | **Number of Modular Homes:** 0 | **Number of Signs (Sign WC Only):** 0 | **Electrical - Fire Alarm:** No | **Full Name:** Pavel Jirku
Standalone Electrical Permit: No | **Progress Energy:** No | **Central Electric (EMC):** No | **Total Amperage:** 0 | **Number of Special Outlets:** 10
Number of Sub-panels: 0
Description: Kitchen Remodel

ELER-012785-2022 | **Type:** Electrical (Residential) | **District:** Lee County (Unincorporated) | **Main Address:** 1741 S Plank Rd
Status: Issued | **Workclass:** Pool | **Project:** | **Parcel:** 9602-53-5955-00 | Sanford, NC 27330
Application Date: 01/14/2022 | **Issue Date:** 01/14/2022 | **Expiration:** 01/18/2023 | **Last Inspection:** 01/18/2022 | **Finaled Date:**
Zone: RA RA Residential Agricultural | **Sq Ft:** 0 | **Valuation:** $0.00 | **Assigned To:**
Additional Info:
Duke Energy: No | **Service Change Out: Up to 100 Amps:** No | **Service Change Out: 125 to 200 Amps:** No | **Electrical - Fire Alarm:** No | **Standalone Electrical Permit:** No
Progress Energy: No | **Central Electric (EMC):** No | **Acres:** 16.0394 | **Power Co.:** CEMC | **Subdivision:**
Description: 16' X 40' SWIMMING POOL

ELER-012794-2022 | **Type:** Electrical (Residential) | **District:** Lee County (Unincorporated) | **Main Address:** 61 Erma Thomas Ln
Status: Issued | **Workclass:** New Construction | **Project:** | **Parcel:** 9694-74-8328-00 | Sanford, NC 27330
Application Date: 01/18/2022 | **Issue Date:** 01/18/2022 | **Expiration:** 07/17/2022 | **Last Inspection:** | **Finaled Date:**
Zone: RA RA Residential Agricultural | **Sq Ft:** 3,582 | **Valuation:** $322,500.00 | **Assigned To:**
Additional Info:
Duke Energy: No | **Service Change Out: Up to 100 Amps:** No | **Service Change Out: 125 to 200 Amps:** No | **Electrical - Fire Alarm:** No | **Standalone Electrical Permit:** No
Progress Energy: No | **Central Electric (EMC):** No | **Total Amperage:** 200 | **Acres:** 2.08214 | **Power Co.:** CEMC
Subdivision: SHERRY ACRES
Description: NEW SFD - LOT 2

ELER-012795-2022 | **Type:** Electrical (Residential) | **District:** Sanford | **Main Address:** 2705 Piedmont Dr
Status: Complete | **Workclass:** Alteration | **Project:** | **Parcel:** 9643-19-7754-00 | Sanford, NC 27330
Application Date: 01/18/2022 | **Issue Date:** 01/18/2022 | **Expiration:** 01/19/2023 | **Last Inspection:** 01/19/2022 | **Finaled Date:** 01/19/2022
Zone: R-20 R-20 | **Sq Ft:** 0 | **Valuation:** $0.00 | **Assigned To:**
Additional Info:
Duke Energy: No | **Service Change Out: Up to 100 Amps:** No | **Service Change Out: 125 to 200 Amps:** No | **Electrical - Fire Alarm:** No | **Standalone Electrical Permit:** No
Progress Energy: No | **Central Electric (EMC):** No | **Acres:** 0.905247 | **Power Co.:** DUKE | **Subdivision:** FOREST HILLS
Description: REPLACING 200 AMP OVERHEAD SERVICE

ELER-012796-2022 | **Type:** Electrical (Residential) | **District:** Lee County (Unincorporated) | **Main Address:** 354 Harbor Trace West
Status: Complete | **Workclass:** Power Restoration | **Project:** | **Parcel:** 9660-91-5462-00 | Sanford, NC 27332
Application Date: 01/18/2022 | **Issue Date:** 01/18/2022 | **Expiration:** 01/18/2023 | **Last Inspection:** 01/18/2022 | **Finaled Date:** 01/18/2022
Zone: RR RR | **Sq Ft:** 0 | **Valuation:** $0.00 | **Assigned To:**
Additional Info:
Duke Energy: No | **Service Change Out: Up to 100 Amps:** No | **Service Change Out: 125 to 200 Amps:** No | **Electrical - Fire Alarm:** No | **Standalone Electrical Permit:** No
Progress Energy: No | **Central Electric (EMC):** No | **Acres:** 0.103379 | **Power Co.:** DUKE | **Subdivision:** CAROLINA TRACE
Description: POWER RESTORATION - HVAC AIR HANDLER FIRE - METER PULLED BY SFD

ELER-012799-2022 | **Type:** Electrical (Residential) | **District:** Lee County (Unincorporated) | **Main Address:** 435 Maggie Ln
Status: Issued | **Workclass:** Manufactured Home | **Project:** | **Parcel:** 9559-84-4470-00 | Sanford, NC 27332
Application Date: 01/18/2022 | **Issue Date:** 01/18/2022 | **Expiration:** 07/17/2022 | **Last Inspection:** | **Finaled Date:**
Zone: RA/MH RA/MH | **Sq Ft:** 0 | **Valuation:** $0.00 | **Assigned To:**
Additional Info:
Building Permit #: 012296 | **Duke Energy:** Yes | **Service Change Out: Up to 100 Amps:** No | **Service Change Out: 125 to 200 Amps:** No | **Manufactured Home Subclass:** Single-Wide
Electrical - Fire Alarm: No | **Standalone Electrical Permit:** No | **Progress Energy:** No | **Central Electric (EMC):** No | **Acres:** 1.99623
Power Co.: DUKE | **Subdivision:**
Description: WIRING SET UP OF SINGLE WIDE

ELER-012810-2022 | **Type:** Electrical (Residential) | **District:** Lee County (Unincorporated) | **Main Address:** 217 Kensington Dr
Status: Issued | **Workclass:** New Construction | **Project:** | **Parcel:** | Sanford, NC 27330
Application Date: 01/18/2022 | **Issue Date:** 01/19/2022 | **Expiration:** 07/18/2022 | **Last Inspection:** | **Finaled Date:**
Zone: | **Sq Ft:** 0 | **Valuation:** $0.00 | **Assigned To:**
Additional Info:
Building Permit #: BRES-012556-2021 | **Contractor PIN #:** u-31732 | **Duke Energy:** No | **Service Change Out: Up to 100 Amps:** No | **Service Change Out: 125 to 200 Amps:** No
Number of Room Additions: 0 | **Number of Modular Homes:** 0 | **Number of Signs (Sign WC Only):** 0 | **Electrical - Fire Alarm:** No | **Full Name:** Melanie Fernandez
Standalone Electrical Permit: No | **Progress Energy:** No | **Central Electric (EMC):** No | **Total Amperage:** 200 | **Number of Special Outlets:** 0
Number of Sub-panels: 0
Description: wiring new construction home

ELER-012811-2022 **Type:** Electrical (Residential) **District:** Lee County (Unincorporated) **Main Address:** 213 Kensington Dr
Status: Issued **Workclass:** New Construction **Project:** **Parcel:** Sanford, NC 27330
Application Date: 01/18/2022 **Issue Date:** 01/19/2022 **Expiration:** 07/18/2022 **Last Inspection:** **Finaled Date:**
Zone: **Sq Ft:** 0 **Valuation:** $0.00 **Assigned To:**
Additional Info:
Building Permit #: BRES-012555-2021 **Contractor PIN #:** u-31732 **Duke Energy:** No **Service Change Out: Up to 100 Amps:** No **Service Change Out: 125 to 200 Amps:** No
Number of Room Additions: 0 **Number of Modular Homes:** 0 **Number of Signs (Sign WC Only):** 0 **Electrical - Fire Alarm:** No **Full Name:** Melanie Fernandez
Standalone Electrical Permit: No **Progress Energy:** No **Central Electric (EMC):** No **Total Amperage:** 200 **Number of Special Outlets:** 0
Number of Sub-panels: 0
Description: wiring of new contruction home

ELER-012823-2022 **Type:** Electrical (Residential) **District:** Lee County (Unincorporated) **Main Address:** 2762 Steel Bridge Rd
Status: Issued **Workclass:** Miscellaneous **Project:** **Parcel:** 9612-82-2358-00 Sanford, NC 27330
Application Date: 01/19/2022 **Issue Date:** 01/19/2022 **Expiration:** 01/27/2023 **Last Inspection:** 01/27/2022 **Finaled Date:**
Zone: RA RA Residential Agricultural **Sq Ft:** 0 **Valuation:** $0.00 **Assigned To:**
Additional Info:
Building Permit #: **Contractor PIN #:** 21474 **Duke Energy:** No **Service Change Out: Up to 100 Amps:** No **Service Change Out: 125 to 200 Amps:** Yes
Number of Room Additions: 0 **Number of Modular Homes:** 0 **Number of Signs (Sign WC Only):** 0 **Electrical - Fire Alarm:** No **Acknowledgment:** Yes
Full Name: Joel Worsham **Standalone Electrical Permit:** No **Progress Energy:** No **Central Electric (EMC):** Yes **Total Amperage:** 200
Number of Special Outlets: 0 **Number of Sub-panels:** 0 **Acres:** 1.99507 **Subdivision:**
Description: install 20kw generator - power disconnection with 200 Amp Transfer switch - & gas line

---

ELER-012828-2022 **Type:** Electrical (Residential) **District:** Sanford **Main Address:** 2717 Bristol Way
Status: Issued **Workclass:** Miscellaneous **Project:** **Parcel:** 9623-83-3680-00 Sanford, NC 27330
Application Date: 01/19/2022 **Issue Date:** 01/24/2022 **Expiration:** 07/23/2022 **Last Inspection:** **Finaled Date:**
Zone: R-14 R-14 Residential Single-Family **Sq Ft:** 0 **Valuation:** $0.00 **Assigned To:**
Additional Info:
Building Permit #: **Contractor PIN #:** 26804 **Duke Energy:** No **Service Change Out: Up to 100 Amps:** No **Service Change Out: 125 to 200 Amps:** No
Number of Room Additions: 0 **Number of Modular Homes:** 0 **Number of Signs (Sign WC Only):** 0 **Electrical - Fire Alarm:** No **Acknowledgment:** Yes
Full Name: Christopher Conrad **Standalone Electrical Permit:** Yes **Progress Energy:** No **Central Electric (EMC):** No **Total Amperage:** 0
Number of Special Outlets: 0 **Number of Sub-panels:** 0 **Watershed:** DEEP RIVER / LEE COUNTY **Acres:** 1.38757 **Flood Zone:** AE
Subdivision: BROWNSTONE
Description: Installing 2 15 amp GFCI outlets

ELER-012829-2022 **Type:** Electrical (Residential) **District:** Broadway ETJ **Main Address:** 65 Green Acres Dr
Status: Issued **Workclass:** New Construction **Project:** **Parcel:** Sanford nc
Application Date: 01/19/2022 **Issue Date:** 01/24/2022 **Expiration:** 07/23/2022 **Last Inspection:** **Finaled Date:**
Zone: **Sq Ft:** 0 **Valuation:** $0.00 **Assigned To:**
Additional Info:
Building Permit #: BRES-012358-2021 **Contractor PIN #:** 31732 **Duke Energy:** No **Service Change Out: Up to 100 Amps:** No **Service Change Out: 125 to 200 Amps:** No
Number of Room Additions: 0 **Number of Modular Homes:** 0 **Number of Signs (Sign WC Only):** 0 **Electrical - Fire Alarm:** No **Full Name:** Melanie fernandez

Standalone Electrical Permit: No **Progress Energy:** No **Central Electric (EMC):** No **Total Amperage:** 200 **Number of Special Outlets:** 0
Number of Sub-panels: 0
Description: wiring of new construction home

ELER-012830-2022 **Type:** Electrical (Residential) **District:** Broadway **Main Address:** 35 Green Acres Drive
Status: Issued **Workclass:** New Construction **Project:** **Parcel:** Broadway 27505
Application Date: 01/19/2022 **Issue Date:** 01/19/2022 **Expiration:** 07/18/2022 **Last Inspection:** **Finaled Date:**
Zone: **Sq Ft:** 0 **Valuation:** $0.00 **Assigned To:**
Additional Info:
Building Permit #: BREA-012362-2021 **Contractor PIN #:** u-31732 **Duke Energy:** No **Service Change Out: Up to 100 Amps:** No **Service Change Out: 125 to 200 Amps:** No
Number of Room Additions: 0 **Number of Modular Homes:** 0 **Number of Signs (Sign WC Only):** 0 **Electrical - Fire Alarm:** No **Full Name:** Melanie Fernandez
Standalone Electrical Permit: No **Progress Energy:** No **Central Electric (EMC):** No **Total Amperage:** 200 **Number of Special Outlets:** 0
Number of Sub-panels: 0
Description: wiring new construction home

ELER-012833-2022 **Type:** Electrical (Residential) **District:** Lee County (Unincorporated) **Main Address:** 4078 Chris Cole Rd
Status: Complete **Workclass:** Power Restoration **Project:** **Parcel:** 9519-49-6437-00 Sanford, NC 27332
Application Date: 01/19/2022 **Issue Date:** 01/19/2022 **Expiration:** 01/20/2023 **Last Inspection:** 01/20/2022 **Finaled Date:** 01/20/2022
Zone: RA RA Residential Agricultural **Sq Ft:** 0 **Valuation:** $0.00 **Assigned To:**
Additional Info:
Duke Energy: Yes **Service Change Out: Up to 100 Amps:** No **Service Change Out: 125 to 200 Amps:** No **Electrical - Fire Alarm:** No **Standalone Electrical Permit:** Yes
Progress Energy: No **Central Electric (EMC):** No **Acres:** 17.6106 **Power Co.:** DUKE **Subdivision:**
Description: POWER RESTORATION PERMIT

ELER-012846-2022 **Type:** Electrical (Residential) **District:** Broadway ETJ **Main Address:** 691 Seminole Rd
Status: Issued **Workclass:** Repair **Project:** **Parcel:** Broadway, NC 27505
Application Date: 01/20/2022 **Issue Date:** 01/20/2022 **Expiration:** 07/19/2022 **Last Inspection:** **Finaled Date:**
Zone: **Sq Ft:** 0 **Valuation:** $0.00 **Assigned To:** Samantha Miller
Additional Info:
Duke Energy: No **Service Change Out: Up to 100 Amps:** No **Service Change Out: 125 to 200 Amps:** No **Electrical - Fire Alarm:** No **Standalone Electrical Permit:** No
Progress Energy: No **Central Electric (EMC):** No
Description: PANEL MOVED/ REPAIR

ELER-012850-2022 **Type:** Electrical (Residential) **District:** Lee County (Unincorporated) **Main Address:** 4047 Cox Mill Rd
Status: Complete **Workclass:** Accessory Structure **Project:** **Parcel:** 9671-12-5608-00 Sanford, NC 27332
Application Date: 01/20/2022 **Issue Date:** 01/20/2022 **Expiration:** 01/24/2023 **Last Inspection:** 01/24/2022 **Finaled Date:** 01/24/2022
Zone: RA RA Residential Agricultural **Sq Ft:** 0 **Valuation:** $0.00 **Assigned To:**
Additional Info:
Duke Energy: No **Service Change Out: Up to 100 Amps:** No **Service Change Out: 125 to 200 Amps:** No **Electrical - Fire Alarm:** No **Standalone Electrical Permit:** No
Progress Energy: No **Central Electric (EMC):** No **Acres:** 24.3186 **Power Co.:** DUKE **Subdivision:**
Description: WIRING OF ACCESSORY BUILDING ON BONAFIDE FARM

ELER-012852-2022 **Type:** Electrical (Residential) **District:** Lee County (Unincorporated) **Main Address:** 1906 Valley Rd
Status: Issued **Workclass:** Miscellaneous **Project:** **Parcel:** 9624-93-0018-00 Sanford, NC 27330
Application Date: 01/21/2022 **Issue Date:** 01/25/2022 **Expiration:** 07/24/2022 **Last Inspection:** **Finaled Date:**
Zone: RR RR **Sq Ft:** 0 **Valuation:** $0.00 **Assigned To:**
Additional Info:
Building Permit #: **Contractor PIN #:** 23150-U **Duke Energy:** Yes **Service Change Out: Up to 100 Amps:** No **Service Change Out: 125 to 200 Amps:** No
Number of Room Additions: 0 **Number of Modular Homes:** 0 **Number of Signs (Sign WC Only):** 0 **Electrical - Fire Alarm:** No **Acknowledgment:** Yes
Full Name: Elaine Stoner **Standalone Electrical Permit:** Yes **Progress Energy:** No **Central Electric (EMC):** No **Total Amperage:** 0
Number of Special Outlets: 0 **Number of Sub-panels:** 0 **Acres:** 5.13212 **Power Co.:** DUKE **Subdivision:**
Description: Install 24KW generator

ELER-012853-2022 **Type:** Electrical (Residential) **District:** Lee County (Unincorporated) **Main Address:** 4619 Hawkins Avenue
Status: Complete **Workclass:** Miscellaneous **Project:** **Parcel:** 9646-14-9377-00 Sanford, NC 27330
Application Date: 01/21/2022 **Issue Date:** 01/25/2022 **Expiration:** 01/31/2023 **Last Inspection:** 01/31/2022 **Finaled Date:** 01/31/2022
Zone: RA RA Residential Agricultural **Sq Ft:** 0 **Valuation:** $0.00 **Assigned To:**
Additional Info:
Building Permit #: **Contractor PIN #:** 23150-U **Duke Energy:** Yes **Service Change Out: Up to 100 Amps:** No **Service Change Out: 125 to 200 Amps:** No
Number of Room Additions: 0 **Number of Modular Homes:** 0 **Number of Signs (Sign WC Only):** 0 **Electrical - Fire Alarm:** No **Acknowledgment:** Yes
Full Name: Elaine Stoner **Standalone Electrical Permit:** Yes **Progress Energy:** No **Central Electric (EMC):** No **Total Amperage:** 0
Number of Special Outlets: 0 **Number of Sub-panels:** 0 **Acres:** 23.3673 **Power Co.:** DUKE **Flood Zone:** AE
Subdivision:
Description: Install interlock kit and new main breaker in panel

---

ELER-012868-2022 **Type:** Electrical (Residential) **District:** Sanford **Main Address:** 1711 Lynwood Circle
Status: Complete **Workclass:** Power Restoration **Project:** **Parcel:** 9633-63-7256-00 Sanford, NC 27330
Application Date: 01/24/2022 **Issue Date:** 01/25/2022 **Expiration:** 01/25/2023 **Last Inspection:** 01/25/2022 **Finaled Date:** 01/25/2022
Zone: R-20 R-20 **Sq Ft:** 0 **Valuation:** $0.00 **Assigned To:**
Additional Info:
Central Electric (EMC): No **Total Amperage:** 0 **Number of Special Outlets:** 0 **Number of Sub-panels:** 0 **Acres:** 0.508866
Power Co.: DUKE **Subdivision:** WESTLAKE VALLEY **Building Permit #:** **Contractor PIN #:** 23150-U **Duke Energy:** Yes
Service Change Out: Up to 100 Amps: No **Service Change Out: 125 to 200 Amps:** Yes **Number of Room Additions:** 0 **Number of Modular Homes:** 0 **Number of Signs (Sign WC Only):** 0
Electrical - Fire Alarm: No **Acknowledgment:** Yes **Full Name:** Elaine Stoner **Standalone Electrical Permit:** Yes **Progress Energy:** No
Description: Replace 200amp interior panel

ELER-012889-2022 **Type:** Electrical (Residential) **District:** Broadway **Main Address:** 40 Green Acres Dr
Status: Issued **Workclass:** New Construction **Project:** **Parcel:** Broadway 27505
Application Date: 01/26/2022 **Issue Date:** 01/27/2022 **Expiration:** 07/26/2022 **Last Inspection:** **Finaled Date:**
Zone: **Sq Ft:** 0 **Valuation:** $0.00 **Assigned To:**
Additional Info:
Building Permit #: BRES-012720-2022 **Contractor PIN #:** u-31732 **Duke Energy:** No **Service Change Out: Up to 100 Amps:** No **Service Change Out: 125 to 200 Amps:** No
Number of Room Additions: 0 **Number of Modular Homes:** 0 **Number of Signs (Sign WC Only):** 0 **Electrical - Fire Alarm:** No **Full Name:** Melanie Fernandez
Standalone Electrical Permit: No **Progress Energy:** No **Central Electric (EMC):** No **Total Amperage:** 200 **Number of Special Outlets:** 0

Number of Sub-panels: 0
Description: wiring of new construction home

ELER-012892-2022 | **Type:** Electrical (Residential) | **District:** Lee County (Unincorporated) | **Main Address:** 7704 Villanow Dr
Status: Issued | **Workclass:** Miscellaneous | **Project:** | **Parcel:** 9519-97-0455-00 | Sanford, NC 27332
Application Date: 01/26/2022 | **Issue Date:** 01/26/2022 | **Expiration:** 07/25/2022 | **Last Inspection:** | **Finaled Date:**
Zone: RR RR | **Sq Ft:** 0 | **Valuation:** $0.00 | **Assigned To:**
Additional Info:
Duke Energy: Yes | **Service Change Out: Up to 100 Amps:** No | **Service Change Out: 125 to 200 Amps:** No | **Electrical - Fire Alarm:** No | **Standalone Electrical Permit:** Yes
Progress Energy: No | **Central Electric (EMC):** No | **Acres:** 1.95 | **Power Co.:** DUKE | **Subdivision:** LAKE VILLANOW II
Description: RECEPTICLE INSTALL FOR GAS WATER HEATER

ELER-012896-2022 | **Type:** Electrical (Residential) | **District:** Lee County (Unincorporated) | **Main Address:** 7183 Sheriff Watson Rd
Status: Issued | **Workclass:** Addition | **Project:** | **Parcel:** 9557-05-1462-00 | Sanford, NC 27332
Application Date: 01/26/2022 | **Issue Date:** 01/26/2022 | **Expiration:** 07/25/2022 | **Last Inspection:** | **Finaled Date:**
Zone: RA RA Residential Agricultural | **Sq Ft:** 1,710 | **Valuation:** $20,000.00 | **Assigned To:**
Additional Info:
Duke Energy: No | **Service Change Out: Up to 100 Amps:** No | **Service Change Out: 125 to 200 Amps:** No | **Number of Room Additions:** 1 | **Electrical - Fire Alarm:** No
Standalone Electrical Permit: No | **Progress Energy:** No | **Central Electric (EMC):** No | **Number of Special Outlets:** 1 | **Acres:** 3.16463
Power Co.: CEMC | **Subdivision:** BARRYWOOD
Description: 30' X 57' ADDITION ** WORK HAS BEEN STARTED ** FOOTINGS HAVE BEEN DUG & CONCRETE POURED

ELER-012900-2022 | **Type:** Electrical (Residential) | **District:** Lee County (Unincorporated) | **Main Address:** 824 St Andrews Church Rd
Status: Issued | **Workclass:** New Construction | **Project:** | **Parcel:** | Sanford, NC 27330
Application Date: 01/26/2022 | **Issue Date:** 01/27/2022 | **Expiration:** 07/26/2022 | **Last Inspection:** | **Finaled Date:**
Zone: | **Sq Ft:** 0 | **Valuation:** $0.00 | **Assigned To:**
Additional Info:
Building Permit #: BRES-012651-2022 | **Contractor PIN #:** 27098 | **Duke Energy:** No | **Service Change Out: Up to 100 Amps:** No | **Service Change Out: 125 to 200 Amps:** No
Number of Room Additions: 0 | **Number of Modular Homes:** 0 | **Number of Signs (Sign WC Only):** 0 | **Electrical - Fire Alarm:** No | **Acknowledgment:** Yes
Full Name: MICHAEL FRITTELLI | **Standalone Electrical Permit:** No | **Progress Energy:** No | **Central Electric (EMC):** No | **Total Amperage:** 200
Number of Special Outlets: 0 | **Number of Sub-panels:** 0
Description: WIRING OF NEW SFD (200 AMPS)

ELER-012904-2022 | **Type:** Electrical (Residential) | **District:** Broadway | **Main Address:** 219 Beale Dr
Status: Issued | **Workclass:** New Construction | **Project:** | **Parcel:** 9682-50-5159-00 | Broadway, NC 27505
Application Date: 01/26/2022 | **Issue Date:** 01/26/2022 | **Expiration:** 07/25/2022 | **Last Inspection:** | **Finaled Date:**
Zone: R-20 R-20 | **Sq Ft:** 3,946 | **Valuation:** $250,000.00 | **Assigned To:**
Additional Info:
Building Permit #: 008778 | **Duke Energy:** Yes | **Service Change Out: Up to 100 Amps:** No | **Service Change Out: 125 to 200 Amps:** No | **Electrical - Fire Alarm:** No
Standalone Electrical Permit: No | **Progress Energy:** No | **Central Electric (EMC):** No | **Total Amperage:** 400 | **Acres:** 0.791008
Power Co.: DUKE | **Subdivision:** WATSON, E C
Description: WIRING NEW SFD (400 AMPS)

ELER-012917-2022 **Type:** Electrical (Residential) **District:** Lee County (Unincorporated) **Main Address:** 95 Eaker Dr
Status: Issued **Workclass:** New Construction **Project:** **Parcel:** 9546-19-1951-00 Cameron, NC 28326
Application Date: 01/28/2022 **Issue Date:** 01/28/2022 **Expiration:** 01/28/2023 **Last Inspection:** 01/28/2022 **Finaled Date:**
Zone: RA RA Residential Agricultural **Sq Ft:** 4,530 **Valuation:** $400,000.00 **Assigned To:**
Additional Info:
Duke Energy: No **Service Change Out: Up to 100 Amps:** No **Service Change Out: 125 to 200 Amps:** No **Electrical - Fire Alarm:** No **Standalone Electrical Permit:** No
Progress Energy: No **Central Electric (EMC):** No **Total Amperage:** 400 **Watershed:** LITTLE RIVER / LEE COUNTY **Acres:** 2.51
Power Co.: CEMC **Subdivision:** KENWOOD
Description: NEW SFD- LOT 47

ELER-012927-2022 **Type:** Electrical (Residential) **District:** Sanford **Main Address:** 1516 Brentwood Pl
Status: Issued **Workclass:** Addition **Project:** **Parcel:** 9633-73-7860-00 Sanford, NC 27330
Application Date: 01/28/2022 **Issue Date:** 01/28/2022 **Expiration:** 07/27/2022 **Last Inspection:** **Finaled Date:**
Zone: R-20 R-20 **Sq Ft:** 900 **Valuation:** $15,000.00 **Assigned To:**
Additional Info:
Duke Energy: No **Service Change Out: Up to 100 Amps:** No **Service Change Out: 125 to 200 Amps:** No **Electrical - Fire Alarm:** No **Standalone Electrical Permit:** No
Progress Energy: No **Central Electric (EMC):** No **Acres:** 1.87888 **Power Co.:** DUKE **Subdivision:** WESTLAKE VALLEY
Description: PROPOSED PATIO RENOVATION WITH A COVERED PORTION

ELER-012928-2022 **Type:** Electrical (Residential) **District:** Sanford **Main Address:** 216 Register St
Status: Issued **Workclass:** Alteration **Project:** **Parcel:** 9653-52-3441-00 Sanford, NC 27330
Application Date: 01/31/2022 **Issue Date:** 01/31/2022 **Expiration:** 07/30/2022 **Last Inspection:** **Finaled Date:**
Zone: R-6 R-6 **Sq Ft:** 0 **Valuation:** $10,000.00 **Assigned To:**
Additional Info:
Building Permit #: 008661-2021 **Duke Energy:** No **Service Change Out: Up to 100 Amps:** No **Service Change Out: 125 to 200 Amps:** No **Electrical - Fire Alarm:** No
Standalone Electrical Permit: No **Progress Energy:** No **Central Electric (EMC):** No **Watershed:** CAPE FEAR / LEE COUNTY **Acres:** 0.279188
Power Co.: DUKE **Subdivision:** HILLCREST
Description: INTERIOR RENOVATIONS - ADDING RECEPTACLES & LIGHT FIXTURES

PERMITS ISSUED FOR ELECTRICAL (RESIDENTIAL): 68

FIRE

FIRE-012672-2022 **Type:** Fire **District:** Sanford **Main Address:** 4492 Colon Rd
Status: Issued **Workclass:** Fire Operational **Project:** **Parcel:** 9656-30-2798-00 Sanford, NC 27330
Application Date: 01/06/2022 **Issue Date:** 01/06/2022 **Expiration:** 07/05/2022 **Last Inspection:** **Finaled Date:**
Zone: CZ CZ **Sq Ft:** 0 **Valuation:** $0.00 **Assigned To:**
Additional Info:
New Construction: No **Number of Explosives:** 1 **Re-Test:** No **Reactivation:** No **Renovations:** No
Standby Personnel Needed: No **Subdivision:** **Watershed:** CAPE FEAR / LEE COUNTY **Acres:** 9.9571 **Power Co.:** DUKE
Description: BLASTING PERMIT FOR GALVIN'S RIDGE

PERMITS ISSUED BY TYPE (01/03/2022 TO 01/31/2022)

FIRE-012752-2022 **Type:** Fire **District:** Sanford **Main Address:** 401-447 Fallon Ct
Status: Issued **Workclass:** Fire Alarm **Project:** **Parcel:** 9643-79-4577-00 Sanford, NC 27330
Application Date: 01/12/2022 **Issue Date:** 01/12/2022 **Expiration:** 07/11/2022 **Last Inspection:** **Finaled Date:**
Zone: R-20 R-20 **Sq Ft:** 31,310 **Valuation:** $1,605,398.00 **Assigned To:**
Additional Info:
New Construction: No **Re-Test:** No **Reactivation:** No **Renovations:** No **Standby Personnel Needed:** No
Subdivision: **Acres:** 18.45 **Power Co.:** DUKE
Description: HAWKINS WALK APARTMENTS - BUILDING 4

FIRE-012813-2022 **Type:** Fire **District:** Sanford **Main Address:** 226 Linden Ave
Status: Issued **Workclass:** Fire Suppression **Project:** **Parcel:** 9643-82-1136-00 Sanford, NC 27330
Application Date: 01/18/2022 **Issue Date:** 01/18/2022 **Expiration:** 07/17/2022 **Last Inspection:** **Finaled Date:**
Zone: R-6 R-6 **Sq Ft:** 3,328 **Valuation:** $1,265,122.00 **Assigned To:**
Additional Info:
New Construction: No **Re-Test:** No **Reactivation:** No **Renovations:** No **Standby Personnel Needed:** No
Number of Sprinkler Systems: 1 **Subdivision:** **Acres:** 0.57 **Power Co.:** DUKE
Description: SPRINKLER PERMIT APPLICATION FOR ALTERATION LEVEL III, CHANGE OF OCCUPANCY FROM DAYCARE TO MULTI FAMILY APT

FIRE-012877-2022 **Type:** Fire **District:** Sanford **Main Address:** 310 Mcneill Rd
Status: Complete **Workclass:** Fire Suppression **Project:** **Parcel:** 9634-80-3881-00 Sanford, NC 27330
Application Date: 01/25/2022 **Issue Date:** 01/25/2022 **Expiration:** 01/27/2023 **Last Inspection:** 01/27/2022 **Finaled Date:** 01/28/2022
Zone: LI LI Light Industrial **Sq Ft:** 863 **Valuation:** $0.00 **Assigned To:**
Additional Info:
New Construction: No **Re-Test:** No **Reactivation:** No **Renovations:** No **Standby Personnel Needed:** No
Number of Sprinkler Systems: 1 **Flood Zone:** SHADED X, AE **Subdivision:** **Acres:** 17.2081 **Power Co.:** DUKE
Description: SPRINKLER PERMIT MODIFICATION (863 SQ.FT)

FIRE-012878-2022 **Type:** Fire **District:** Sanford **Main Address:** 310 Mcneill Rd
Status: Complete **Workclass:** Fire Suppression **Project:** **Parcel:** 9634-80-3881-00 Sanford, NC 27330
Application Date: 01/25/2022 **Issue Date:** 01/25/2022 **Expiration:** 01/27/2023 **Last Inspection:** 01/27/2022 **Finaled Date:** 01/28/2022
Zone: LI LI Light Industrial **Sq Ft:** 115 **Valuation:** $0.00 **Assigned To:**
Additional Info:
New Construction: No **Re-Test:** No **Reactivation:** No **Renovations:** No **Standby Personnel Needed:** No
Number of Sprinkler Systems: 1 **Flood Zone:** SHADED X, AE **Subdivision:** **Acres:** 17.2081 **Power Co.:** DUKE
Description: SPRINKLER PERMIT MODIFICATIONS (115 SQ. FT)

FIRE-012891-2022 **Type:** Fire **District:** Sanford **Main Address:** 226 Linden Ave
Status: Issued **Workclass:** Fire Alarm **Project:** **Parcel:** 9643-82-1136-00 Sanford, NC 27330
Application Date: 01/26/2022 **Issue Date:** 01/26/2022 **Expiration:** 07/25/2022 **Last Inspection:** **Finaled Date:**
Zone: R-6 R-6 **Sq Ft:** 1,607 **Valuation:** $0.00 **Assigned To:** Samantha Miller
Additional Info:
New Construction: No **Re-Test:** No **Reactivation:** No **Renovations:** No **Standby Personnel Needed:** No
Subdivision: **Acres:** 0.57 **Power Co.:** DUKE
Description: FIRE ALARM

FIRE-012914-2022 | **Type:** Fire | **District:** Sanford ETJ | **Main Address:** 1313 Tramway Rd
Status: Issued | **Workclass:** Burn | **Project:** | **Parcel:** 9651-07-0981-00 | Sanford, NC 27332
Application Date: 01/27/2022 | **Issue Date:** 01/27/2022 | **Expiration:** 07/26/2022 | **Last Inspection:** | **Finaled Date:**
Zone: R-20 R-20 | **Sq Ft:** 0 | **Valuation:** $0.00 | **Assigned To:**
Additional Info:
New Construction: No | **Re-Test:** No | **Reactivation:** No | **Renovations:** No | **Standby Personnel Needed:** No
Subdivision: | **Acres:** 1.30777 | **Power Co.:** DUKE
Description: BURN PERMIT

PERMITS ISSUED FOR FIRE: 7

MECHANICAL

MECH-012196-2021 | **Type:** Mechanical | **District:** Broadway | **Main Address:** 406 Macbeth
Status: Complete | **Workclass:** Residential | **Project:** | **Parcel:** 9682-52-6081-00 | Broadway, NC 27505
Application Date: 11/22/2021 | **Issue Date:** 01/25/2022 | **Expiration:** 01/28/2023 | **Last Inspection:** 01/28/2022 | **Finaled Date:** 01/28/2022
Zone: R-10/MH R-10/MH | **Sq Ft:** 0 | **Valuation:** $0.00 | **Assigned To:**
Additional Info:
Is this a standalone Mechanical Permit?: Yes | **New Construction:** Yes | **Contractor PIN #:** 22024 | **Building Permit #:** | **Items Not Shown:** 0
Residential Ductwork Additions: No | **Number of Gas Accessory Units:** 0 | **Number of Gas Heating Unit w/ A/C Units:** 0 | **Number of Gas Logs/Fireplace Units:** 0 | **Number of Gas Pack Units:** 0
Number of Gas Piping/Pressure Test Units: 0 | **Number of Heat Pump Units:** 1 | **Number of Air Conditioning Units:** 0 | **Commercial Ductwork Additions:** No | **Number of Heating Units:** 0
Acres: 0.300783 | **Subdivision:** ACT II
Description: Install 2 Ton split Heat Pump. ductwork, dryer vent and bath exhaust fans.

MECH-012564-2021 | **Type:** Mechanical | **District:** Sanford | **Main Address:** 1007 Courtland Vlg
Status: Issued | **Workclass:** Residential | **Project:** | **Parcel:** 9652-01-2588-00 | Sanford, NC 27330
Application Date: 12/22/2021 | **Issue Date:** 01/04/2022 | **Expiration:** 07/03/2022 | **Last Inspection:** | **Finaled Date:**
Zone: R-12 R-12 Residential Mixed | **Sq Ft:** 0 | **Valuation:** $0.00 | **Assigned To:**
Additional Info:
Number of Heating Units: 0 | **Acres:** 5.55036 | **Power Co.:** DUKE | **Subdivision:** COURTLAND VILLAGE | **Is this a standalone Mechanical Permit?:** Yes
New Construction: No | **Contractor PIN #:** 4256 | **Building Permit #:** | **Items Not Shown:** 0 | **Residential Ductwork Additions:** No
Number of Gas Accessory Units: 0 | **Number of Gas Heating Unit w/ A/C Units:** 0 | **Number of Gas Logs/Fireplace Units:** 0 | **Number of Gas Pack Units:** 0 | **Number of Gas Piping/Pressure Test Units:** 0
Number of Heat Pump Units: 1 | **Number of Air Conditioning Units:** 0 | **Commercial Ductwork Additions:** No
Description: changeout 1.5ton split HP

MECH-012565-2021 | **Type:** Mechanical | **District:** Sanford | **Main Address:** 1015 Courtland Vlg
Status: Issued | **Workclass:** Residential | **Project:** | **Parcel:** 9652-01-2588-00 | Sanford, NC 27330
Application Date: 12/22/2021 | **Issue Date:** 01/04/2022 | **Expiration:** 07/03/2022 | **Last Inspection:** | **Finaled Date:**
Zone: R-12 R-12 Residential Mixed | **Sq Ft:** 0 | **Valuation:** $0.00 | **Assigned To:**
Additional Info:
Is this a standalone Mechanical Permit?: Yes | **New Construction:** No | **Contractor PIN #:** 4256 | **Building Permit #:** | **Items Not Shown:** 0
Residential Ductwork Additions: No | **Number of Gas Accessory Units:** 0

Number of Gas Heating Unit w/ A/C Units: 0 | **Number of Gas Logs/Fireplace Units:** 0 | **Number of Gas Pack Units:** 0 | **Number of Gas Piping/Pressure Test Units:** 0 | **Number of Heat Pump Units:** 1
Number of Air Conditioning Units: 0 | **Commercial Ductwork Additions:** No | **Number of Heating Units:** 0 | **Acres:** 5.55036 | **Power Co.:** DUKE
Subdivision: COURTLAND VILLAGE
Description: changeout 1.5ton split HP

MECH-012566-2021 | **Type:** Mechanical | **District:** Sanford | **Main Address:** 1018 Courtland Vlg
Status: Issued | **Workclass:** Residential | **Project:** | **Parcel:** 9652-01-2588-00 | Sanford, NC 27330
Application Date: 12/22/2021 | **Issue Date:** 01/04/2022 | **Expiration:** 07/03/2022 | **Last Inspection:** | **Finaled Date:**
Zone: R-12 R-12 Residential Mixed | **Sq Ft:** 0 | **Valuation:** $0.00 | **Assigned To:**
Additional Info:
Is this a standalone Mechanical Permit?: Yes | **New Construction:** No | **Contractor PIN #:** 4256 | **Building Permit #:** | **Items Not Shown:** 0
Residential Ductwork Additions: No | **Number of Gas Accessory Units:** 0 | **Number of Gas Heating Unit w/ A/C Units:** 0 | **Number of Gas Logs/Fireplace Units:** 0 | **Number of Gas Pack Units:** 0
Number of Gas Piping/Pressure Test Units: 0 | **Number of Heat Pump Units:** 1 | **Number of Air Conditioning Units:** 0 | **Commercial Ductwork Additions:** No | **Number of Heating Units:** 0
Acres: 5.55036 | **Power Co.:** DUKE | **Subdivision:** COURTLAND VILLAGE
Description: changeout 1.5ton split HP

MECH-012567-2021 | **Type:** Mechanical | **District:** Sanford | **Main Address:** 1023 Courtland Vlg
Status: Issued | **Workclass:** Residential | **Project:** | **Parcel:** 9652-01-2588-00 | Sanford, NC 27330
Application Date: 12/22/2021 | **Issue Date:** 01/04/2022 | **Expiration:** 07/03/2022 | **Last Inspection:** | **Finaled Date:**
Zone: R-12 R-12 Residential Mixed | **Sq Ft:** 0 | **Valuation:** $0.00 | **Assigned To:**
Additional Info:
Is this a standalone Mechanical Permit?: Yes | **New Construction:** No | **Contractor PIN #:** 4256 | **Building Permit #:** | **Items Not Shown:** 0
Residential Ductwork Additions: No | **Number of Gas Accessory Units:** 0 | **Number of Gas Heating Unit w/ A/C Units:** 0 | **Number of Gas Logs/Fireplace Units:** 0 | **Number of Gas Pack Units:** 0
Number of Gas Piping/Pressure Test Units: 0 | **Number of Heat Pump Units:** 1 | **Number of Air Conditioning Units:** 0 | **Commercial Ductwork Additions:** No | **Number of Heating Units:** 0
Acres: 5.55036 | **Power Co.:** DUKE | **Subdivision:** COURTLAND VILLAGE
Description: changeout 1.5ton split HP

MECH-012568-2021 | **Type:** Mechanical | **District:** Sanford | **Main Address:** 1033 Courtland Vlg
Status: Issued | **Workclass:** Residential | **Project:** | **Parcel:** 9652-01-2588-00 | Sanford, NC 27330
Application Date: 12/22/2021 | **Issue Date:** 01/04/2022 | **Expiration:** 07/03/2022 | **Last Inspection:** | **Finaled Date:**
Zone: R-12 R-12 Residential Mixed | **Sq Ft:** 0 | **Valuation:** $0.00 | **Assigned To:**
Additional Info:
Is this a standalone Mechanical Permit?: Yes | **New Construction:** No | **Contractor PIN #:** 4256 | **Building Permit #:** | **Items Not Shown:** 0
Residential Ductwork Additions: No | **Number of Gas Accessory Units:** 0 | **Number of Gas Heating Unit w/ A/C Units:** 0 | **Number of Gas Logs/Fireplace Units:** 0 | **Number of Gas Pack Units:** 0
Number of Gas Piping/Pressure Test Units: 0 | **Number of Heat Pump Units:** 1 | **Number of Air Conditioning Units:** 0 | **Commercial Ductwork Additions:** No | **Number of Heating Units:** 0
Acres: 5.55036 | **Power Co.:** DUKE | **Subdivision:** COURTLAND VILLAGE
Description: changeout 1.5ton split HP

MECH-012605-2021 **Type:** Mechanical **District:** Lee County (Unincorporated) **Main Address:** 61 Erma Thomas Ln
Status: Issued **Workclass:** Residential **Project:** **Parcel:** Sanford, NC 27330
Application Date: 12/29/2021 **Issue Date:** 01/28/2022 **Expiration:** 07/27/2022 **Last Inspection:** **Finaled Date:**
Zone: **Sq Ft:** 0 **Valuation:** $0.00 **Assigned To:**
Additional Info:
Is this a standalone Mechanical Permit?: No **New Construction:** Yes **Contractor PIN #:** NA **Building Permit #:** 011458 **Items Not Shown:** 0
Residential Ductwork Additions: No **Number of Gas Accessory Units:** 0 **Number of Gas Heating Unit w/ A/C Units:** 0 **Number of Gas Logs/Fireplace Units:** 1 **Number of Gas Pack Units:** 0
Number of Gas Piping/Pressure Test Units: 0 **Number of Heat Pump Units:** 0 **Number of Air Conditioning Units:** 0 **Commercial Ductwork Additions:** No **Number of Heating Units:** 0
Description: Gas fireplace

MECH-012615-2021 **Type:** Mechanical **District:** Lee County (Unincorporated) **Main Address:** 1417 W Carolina Dr
Status: Issued **Workclass:** Residential **Project:** **Parcel:** 9670-25-6051-00 Sanford, NC 27332
Application Date: 12/30/2021 **Issue Date:** 01/04/2022 **Expiration:** 07/03/2022 **Last Inspection:** **Finaled Date:**
Zone: RR RR **Sq Ft:** 0 **Valuation:** $0.00 **Assigned To:**
Additional Info:
Is this a standalone Mechanical Permit?: Yes **New Construction:** No **Contractor PIN #:** 23371 **Building Permit #:** **Items Not Shown:** 0
Residential Ductwork Additions: Yes **Number of Gas Accessory Units:** 0 **Number of Gas Heating Unit w/ A/C Units:** 0 **Number of Gas Logs/Fireplace Units:** 0 **Number of Gas Pack Units:** 0
Number of Gas Piping/Pressure Test Units: 0 **Number of Heat Pump Units:** 0 **Number of Air Conditioning Units:** 0 **Commercial Ductwork Additions:** No **Number of Heating Units:** 0
Acres: 0.200135 **Subdivision:** CAROLINA TRACE
Description: Relocate Air Handler along with rerouting and adding ductwork to service basement.

MECH-012620-2021 **Type:** Mechanical **District:** Lee County (Unincorporated) **Main Address:** 108 Marina Rd
Status: Complete **Workclass:** Residential **Project:** **Parcel:** 9640-34-2219-00 Sanford, NC 27332
Application Date: 12/31/2021 **Issue Date:** 01/05/2022 **Expiration:** 01/28/2023 **Last Inspection:** 01/28/2022 **Finaled Date:** 01/28/2022
Zone: RA RA Residential Agricultural **Sq Ft:** 0 **Valuation:** $0.00 **Assigned To:**
Additional Info:
Is this a standalone Mechanical Permit?: Yes **New Construction:** No **Contractor PIN #:** 31589 **Building Permit #:** **Items Not Shown:** 0
Residential Ductwork Additions: No **Number of Gas Accessory Units:** 0 **Number of Gas Heating Unit w/ A/C Units:** 0 **Number of Gas Logs/Fireplace Units:** 0 **Number of Gas Pack Units:** 0
Number of Gas Piping/Pressure Test Units: 0 **Number of Heat Pump Units:** 1 **Number of Air Conditioning Units:** 0 **Commercial Ductwork Additions:** No **Number of Heating Units:** 0
Acres: 0.905975 **Subdivision:** RAYS LANDING
Description: HVAC CHANGE OUT, REMOVE AND REPLACE EXISTING SYSTEM 3TON HEAT PUMP SPLIT W/ELECTRIC FURNACE, CHANGE BREAKER SIZE, RECONNECT ELECTRICAL, EQUIPMENT IN LAUNDRY ROOM

MECH-012621-2022 **Type:** Mechanical **District:** Sanford **Main Address:** 935 Wilkins Dr
Status: Complete **Workclass:** Residential **Project:** **Parcel:** 9633-91-3093-00 Sanford, NC 27330
Application Date: 01/03/2022 **Issue Date:** 01/03/2022 **Expiration:** 01/07/2023 **Last Inspection:** 01/07/2022 **Finaled Date:** 01/07/2022
Zone: R-20 R-20 **Sq Ft:** 0 **Valuation:** $0.00 **Assigned To:**
Additional Info:
Is this a standalone Mechanical Permit?: Yes **New Construction:** No **Residential Ductwork Additions:** No **Commercial Ductwork Additions:** No **Number of Heating Units:** 1

Acres: 0.557456 **Power Co.:** DUKE **Subdivision:**
Description: GAS FURNACE - 80000 BTU CHANGEOUT

MECH-012622-2022 **Type:** Mechanical **District:** Sanford **Main Address:** 514 Boulderbrook Pkwy
Status: Issued **Workclass:** Residential **Project:** **Parcel:** Sanford, NC 27330
Application Date: 01/03/2022 **Issue Date:** 01/03/2022 **Expiration:** 07/02/2022 **Last Inspection:** **Finaled Date:**
Zone: **Sq Ft:** 0 **Valuation:** $0.00 **Assigned To:**
Additional Info:
Is this a standalone Mechanical Permit?: No **New Construction:** Yes **Contractor PIN #:** 29077 **Building Permit #:** 009577 **Items Not Shown:** 0
Residential Ductwork Additions: No **Number of Gas Accessory Units:** 0 **Number of Gas Heating Unit w/ A/C Units:** 0 **Number of Gas Logs/Fireplace Units:** 0 **Number of Gas Pack Units:** 0
Number of Gas Piping/Pressure Test Units: 3 **Number of Heat Pump Units:** 1 **Number of Air Conditioning Units:** 0 **Commercial Ductwork Additions:** No **Number of Heating Units:** 0
Description: Installing a 4 Ton split heat pump and running gas lines for fireplace, range, & water heater.

MECH-012623-2022 **Type:** Mechanical **District:** Lee County (Unincorporated) **Main Address:** 160 Edgefield Dr
Status: Issued **Workclass:** Residential **Project:** **Parcel:** Sanford, NC 27332
Application Date: 01/03/2022 **Issue Date:** 01/04/2022 **Expiration:** 07/03/2022 **Last Inspection:** **Finaled Date:**
Zone: **Sq Ft:** 0 **Valuation:** $0.00 **Assigned To:**
Additional Info:
Is this a standalone Mechanical Permit?: Yes **New Construction:** Yes **Contractor PIN #:** 29077 **Building Permit #:** 012225 **Items Not Shown:** 0
Residential Ductwork Additions: No **Number of Gas Accessory Units:** 0 **Number of Gas Heating Unit w/ A/C Units:** 0 **Number of Gas Logs/Fireplace Units:** 0 **Number of Gas Pack Units:** 0
Number of Gas Piping/Pressure Test Units: 1 **Number of Heat Pump Units:** 1 **Number of Air Conditioning Units:** 0 **Commercial Ductwork Additions:** No **Number of Heating Units:** 0
Description: Installing a 3.5 Ton Split Heat Pump with a gas line for the fireplace.

MECH-012625-2022 **Type:** Mechanical **District:** Sanford **Main Address:** 526 Forrest Dr
Status: Complete **Workclass:** Residential **Project:** **Parcel:** 9643-55-6354-00 Sanford, NC 27330
Application Date: 01/03/2022 **Issue Date:** 01/04/2022 **Expiration:** 01/19/2023 **Last Inspection:** 01/19/2022 **Finaled Date:** 01/19/2022
Zone: R-12 R-12 Residential Mixed **Sq Ft:** 0 **Valuation:** $0.00 **Assigned To:**
Additional Info:
Is this a standalone Mechanical Permit?: Yes **New Construction:** No **Contractor PIN #:** 34460, SPPH 33565 **Building Permit #:** **Items Not Shown:** 0
Residential Ductwork Additions: No **Number of Gas Accessory Units:** 0 **Number of Gas Heating Unit w/ A/C Units:** 1 **Number of Gas Logs/Fireplace Units:** 0 **Number of Gas Pack Units:** 0
Number of Gas Piping/Pressure Test Units: 0 **Number of Heat Pump Units:** 0 **Number of Air Conditioning Units:** 0 **Commercial Ductwork Additions:** No **Number of Heating Units:** 0
Acres: 1.3 **Power Co.:** DUKE **Subdivision:** MCCRACKEN HEIGHTS
Description: install 3 ton split gas unit w/AC

MECH-012626-2022 **Type:** Mechanical **District:** Broadway **Main Address:** 206 Watson Lake Dr
Status: Complete **Workclass:** Residential **Project:** **Parcel:** 9681-68-3390-00 Broadway, NC 27505
Application Date: 01/03/2022 **Issue Date:** 01/04/2022 **Expiration:** 01/26/2023 **Last Inspection:** 01/26/2022 **Finaled Date:** 01/26/2022
Zone: R-20 R-20 **Sq Ft:** 0 **Valuation:** $0.00 **Assigned To:**
Additional Info:

Is this a standalone Mechanical Permit?: Yes | **New Construction:** No | **Contractor PIN #:** 28280 | **Building Permit #:** | **Items Not Shown:** 0
Residential Ductwork Additions: No | **Number of Gas Accessory Units:** 0 | **Number of Gas Heating Unit w/ A/C Units:** 0 | **Number of Gas Logs/Fireplace Units:** 0 | **Number of Gas Pack Units:** 0
Number of Gas Piping/Pressure Test Units: 0 | **Number of Heat Pump Units:** 1 | **Number of Air Conditioning Units:** 0 | **Commercial Ductwork Additions:** No | **Number of Heating Units:** 0
Acres: 0.568883 | **Subdivision:**
Description: HVAC Changeout

MECH-012637-2022 | **Type:** Mechanical | **District:** Lee County (Unincorporated) | **Main Address:** 5991 Carbonton Rd
Status: Issued | **Workclass:** Residential | **Project:** | **Parcel:** 9604-71-3500-00 | Sanford, NC 27330
Application Date: 01/04/2022 | **Issue Date:** 01/05/2022 | **Expiration:** 07/04/2022 | **Last Inspection:** | **Finaled Date:**
Zone: RA RA Residential Agricultural | **Sq Ft:** 0 | **Valuation:** $0.00 | **Assigned To:**
Additional Info:
Is this a standalone Mechanical Permit?: No | **New Construction:** Yes | **Contractor PIN #:** 23371 | **Building Permit #:** 011532 | **Items Not Shown:** 0
Residential Ductwork Additions: No | **Number of Gas Accessory Units:** 0 | **Number of Gas Heating Unit w/ A/C Units:** 0 | **Number of Gas Logs/Fireplace Units:** 0 | **Number of Gas Pack Units:** 0
Number of Gas Piping/Pressure Test Units: 0 | **Number of Heat Pump Units:** 1 | **Number of Air Conditioning Units:** 0 | **Commercial Ductwork Additions:** No | **Number of Heating Units:** 0
Watershed: GULF-GOLDSTON / DEEP RIVER | **Acres:** 3.45883 | **Subdivision:**
Description: Installation of a 3.5 ton split heat pump with ductwork.

MECH-012642-2022 | **Type:** Mechanical | **District:** Lee County (Unincorporated) | **Main Address:** 2394 Cotten Rd
Status: Issued | **Workclass:** Residential | **Project:** | **Parcel:** 9634-49-4478-00 | Sanford, NC 27330
Application Date: 01/04/2022 | **Issue Date:** 01/27/2022 | **Expiration:** 02/01/2023 | **Last Inspection:** 02/01/2022 | **Finaled Date:**
Zone: RR RR | **Sq Ft:** 0 | **Valuation:** $0.00 | **Assigned To:**
Additional Info:
Is this a standalone Mechanical Permit?: Yes | **New Construction:** No | **Contractor PIN #:** 24600 H2H3 | **Building Permit #:** | **Items Not Shown:** 0
Residential Ductwork Additions: No | **Number of Gas Accessory Units:** 0 | **Number of Gas Heating Unit w/ A/C Units:** 0 | **Number of Gas Logs/Fireplace Units:** 0 | **Number of Gas Pack Units:** 0
Number of Gas Piping/Pressure Test Units: 0 | **Number of Heat Pump Units:** 1 | **Number of Air Conditioning Units:** 0 | **Commercial Ductwork Additions:** No | **Number of Heating Units:** 0
Acres: 5.98452 | **Subdivision:**
Description: 1 Story home. 2 units and we replaced the one that is in the back of the house. The Air Hanlder is in the crawlspace and condensing unit outside. CB outside. No duct work.

MECH-012643-2022 | **Type:** Mechanical | **District:** Lee County (Unincorporated) | **Main Address:** 253 Saintsbury
Status: Issued | **Workclass:** Residential | **Project:** | **Parcel:** 9519-68-7998-00 | Sanford, NC 27332
Application Date: 01/04/2022 | **Issue Date:** 01/05/2022 | **Expiration:** 01/19/2023 | **Last Inspection:** 01/19/2022 | **Finaled Date:**
Zone: RA RA Residential Agricultural | **Sq Ft:** 0 | **Valuation:** $0.00 | **Assigned To:**
Additional Info:
Is this a standalone Mechanical Permit?: No | **New Construction:** Yes | **Contractor PIN #:** 20012 | **Building Permit #:** | **Items Not Shown:** 0
Residential Ductwork Additions: No | **Number of Gas Accessory Units:** 0 | **Number of Gas Heating Unit w/ A/C Units:** 0 | **Number of Gas Logs/Fireplace Units:** 0 | **Number of Gas Pack Units:** 0
Number of Gas Piping/Pressure Test Units: 2 | **Number of Heat Pump Units:** 2 | **Number of Air Conditioning Units:** 0 | **Commercial Ductwork Additions:** No | **Number of Heating Units:** 0
Acres: 1.03276 | **Subdivision:** BOCA ESTATES

Description: Install two 3 ton split system heat pumps and gas piping to the fireplace and range

---

MECH-012648-2022 | **Type:** Mechanical | **District:** Lee County (Unincorporated) | **Main Address:** 1095 Woodridge Sanford, NC 27332
Status: Complete | **Workclass:** Residential | **Project:** | **Parcel:** 9660-93-5445-00
Application Date: 01/04/2022 | **Issue Date:** 01/06/2022 | **Expiration:** 01/14/2023 | **Last Inspection:** 01/14/2022 | **Finaled Date:** 01/14/2022
Zone: RR RR | **Sq Ft:** 0 | **Valuation:** $0.00 | **Assigned To:**
Additional Info:
Is this a standalone Mechanical Permit?: No | **New Construction:** No | **Contractor PIN #:** 18855/21474 | **Building Permit #:** | **Items Not Shown:** 0
Residential Ductwork Additions: No | **Number of Gas Accessory Units:** 0 | **Number of Gas Heating Unit w/ A/C Units:** 0 | **Number of Gas Logs/Fireplace Units:** 0 | **Number of Gas Pack Units:** 0
Number of Gas Piping/Pressure Test Units: 0 | **Number of Heat Pump Units:** 1 | **Number of Air Conditioning Units:** 0 | **Commercial Ductwork Additions:** No | **Number of Heating Units:** 0
Acres: 0.545785 | **Subdivision:** CAROLINA TRACE
Description: c/o & r/c 4 Ton HP & AH 10 Zone System - Attic- Whole Home

---

MECH-012650-2022 | **Type:** Mechanical | **District:** Sanford | **Main Address:** 529 Boulderbrook Parkway Sanford, NC 27330
Status: Issued | **Workclass:** Residential | **Project:** | **Parcel:**
Application Date: 01/05/2022 | **Issue Date:** 01/13/2022 | **Expiration:** 07/12/2022 | **Last Inspection:** | **Finaled Date:**
Zone: | **Sq Ft:** 0 | **Valuation:** $0.00 | **Assigned To:**
Additional Info:
Is this a standalone Mechanical Permit?: No | **New Construction:** Yes | **Contractor PIN #:** 24294 | **Building Permit #:** 010336 | **Items Not Shown:** 0
Residential Ductwork Additions: No | **Number of Gas Accessory Units:** 0 | **Number of Gas Heating Unit w/ A/C Units:** 0 | **Number of Gas Logs/Fireplace Units:** 1 | **Number of Gas Pack Units:** 0
Number of Gas Piping/Pressure Test Units: 0 | **Number of Heat Pump Units:** 0 | **Number of Air Conditioning Units:** 0 | **Commercial Ductwork Additions:** No | **Number of Heating Units:** 0
Description: PRE-FAB FIREPLACE

MECH-012661-2022 | **Type:** Mechanical | **District:** Lee County (Unincorporated) | **Main Address:** 139 Minter School Sanford, NC 27332
Status: Issued | **Workclass:** Residential | **Project:** | **Parcel:** 9641-83-8315-00
Application Date: 01/05/2022 | **Issue Date:** 01/06/2022 | **Expiration:** 01/12/2023 | **Last Inspection:** 01/12/2022 | **Finaled Date:**
Zone: RA RA Residential Agricultural | **Sq Ft:** 0 | **Valuation:** $0.00 | **Assigned To:**
Additional Info:
Is this a standalone Mechanical Permit?: Yes | **New Construction:** No | **Contractor PIN #:** 23371 | **Building Permit #:** 010430 | **Items Not Shown:** 0
Residential Ductwork Additions: Yes | **Number of Gas Accessory Units:** 0 | **Number of Gas Heating Unit w/ A/C Units:** 0 | **Number of Gas Logs/Fireplace Units:** 0 | **Number of Gas Pack Units:** 0
Number of Gas Piping/Pressure Test Units: 0 | **Number of Heat Pump Units:** 1 | **Number of Air Conditioning Units:** 0 | **Commercial Ductwork Additions:** No | **Number of Heating Units:** 0
Acres: 8.56 | **Flood Zone:** AE | **Subdivision:** WINSTEAD FARMS
Description: 3.0 ton split heat pump with ductwork
GAS PIPING FEE ADDED ON 1/11/22. FEES WILL APPLY. CG
CONTRACTOR CALLED IN AND REQUESTED REFUND FOR DUCTWORK FEE FOR PERMIT. FEES WILL APPLY. CG 1/19/22

MECH-012665-2022 **Type:** Mechanical **District:** Lee County (Unincorporated) **Main Address:** 287 Petty Creek Rd
Status: Complete **Workclass:** Residential **Project:** **Parcel:** 9635-61-5073-00 Sanford, NC 27330
Application Date: 01/06/2022 **Issue Date:** 01/06/2022 **Expiration:** 01/14/2023 **Last Inspection:** 01/14/2022 **Finaled Date:** 01/14/2022
Zone: RA RA Residential Agricultural **Sq Ft:** 0 **Valuation:** $0.00 **Assigned To:**
Additional Info:
Is this a standalone Mechanical Permit?: No **New Construction:** No **Residential Ductwork Additions:** No **Number of Heat Pump Units:** 1 **Commercial Ductwork Additions:** No
Acres: 10.0412 **Power Co.:** CEMC **Flood Zone:** AE **Subdivision:** STONEYBROOK NORTH SEC 3
Description: 2.5 TON HEATPUMP CHANGEOUT

MECH-012666-2022 **Type:** Mechanical **District:** Sanford **Main Address:** 529 Boulderbrook Pkwy
Status: Issued **Workclass:** Residential **Project:** **Parcel:** 9634-21-4078-00 Sanford, NC 27330
Application Date: 01/06/2022 **Issue Date:** 01/06/2022 **Expiration:** 07/05/2022 **Last Inspection:** **Finaled Date:**
Zone: R-20 R-20 **Sq Ft:** 0 **Valuation:** $0.00 **Assigned To:**
Additional Info:
Is this a standalone Mechanical Permit?: No **New Construction:** Yes **Contractor PIN #:** 29077 **Building Permit #:** 10336 **Items Not Shown:** 0
Residential Ductwork Additions: No **Number of Gas Accessory Units:** 0 **Number of Gas Heating Unit w/ A/C Units:** 0 **Number of Gas Logs/Fireplace Units:** 0 **Number of Gas Pack Units:** 0
Number of Gas Piping/Pressure Test Units: 2 **Number of Heat Pump Units:** 1 **Number of Air Conditioning Units:** 0 **Commercial Ductwork Additions:** No **Number of Heating Units:** 0
Acres: 0.574159 **Power Co.:** DUKE **Flood Zone:** AE **Subdivision:** AUTUMNWOOD
Description: Installing a 4 Ton split heat pump and gas lines for fireplace and range.

MECH-012667-2022 **Type:** Mechanical **District:** Sanford **Main Address:** 525 Boulderbrook Pkwy
Status: Issued **Workclass:** Residential **Project:** **Parcel:** Sanford, NC 27330
Application Date: 01/06/2022 **Issue Date:** 01/10/2022 **Expiration:** 07/09/2022 **Last Inspection:** **Finaled Date:**
Zone: **Sq Ft:** 0 **Valuation:** $0.00 **Assigned To:**
Additional Info:
Is this a standalone Mechanical Permit?: Yes **New Construction:** Yes **Contractor PIN #:** 29077 **Building Permit #:** 010034 **Items Not Shown:** 0
Residential Ductwork Additions: No **Number of Gas Accessory Units:** 0 **Number of Gas Heating Unit w/ A/C Units:** 0 **Number of Gas Logs/Fireplace Units:** 0 **Number of Gas Pack Units:** 0
Number of Gas Piping/Pressure Test Units: 2 **Number of Heat Pump Units:** 1 **Number of Air Conditioning Units:** 0 **Commercial Ductwork Additions:** No **Number of Heating Units:** 0
Description: Installing a 4 Ton split heat pump and gas lines for fireplace & range.

MECH-012669-2022 **Type:** Mechanical **District:** Lee County (Unincorporated) **Main Address:** 165 Edgefield Dr
Status: Issued **Workclass:** Residential **Project:** **Parcel:** Sanford, NC 27332
Application Date: 01/06/2022 **Issue Date:** 01/06/2022 **Expiration:** 07/05/2022 **Last Inspection:** **Finaled Date:**
Zone: **Sq Ft:** 0 **Valuation:** $0.00 **Assigned To:**
Additional Info:
Is this a standalone Mechanical Permit?: Yes **New Construction:** Yes **Contractor PIN #:** 29077 **Building Permit #:** 012223 **Items Not Shown:** 0
Residential Ductwork Additions: No **Number of Gas Accessory Units:** 0 **Number of Gas Heating Unit w/ A/C Units:** 0 **Number of Gas Logs/Fireplace Units:** 0 **Number of Gas Pack Units:** 0
Number of Gas Piping/Pressure Test Units: 1 **Number of Heat Pump Units:** 1 **Number of Air Conditioning Units:** 0 **Commercial Ductwork Additions:** No **Number of Heating Units:** 0

Description: Installing a 3.5 Ton split heat pump and gas line for fireplace.

MECH-012670-2022 | **Type:** Mechanical | **District:** Sanford | **Main Address:** 531 Boulderbrook Pkwy
Status: Issued | **Workclass:** Residential | **Project:** | **Parcel:** | Sanford, NC 27330
Application Date: 01/06/2022 | **Issue Date:** 01/13/2022 | **Expiration:** 07/12/2022 | **Last Inspection:** | **Finaled Date:**
Zone: | **Sq Ft:** 0 | **Valuation:** $0.00 | **Assigned To:**
Additional Info:
Is this a standalone Mechanical Permit?: No | **New Construction:** Yes | **Contractor PIN #:** 24294 | **Building Permit #:** 010589 | **Items Not Shown:** 0
Residential Ductwork Additions: No | **Number of Gas Accessory Units:** 0 | **Number of Gas Heating Unit w/ A/C Units:** 0 | **Number of Gas Logs/Fireplace Units:** 1 | **Number of Gas Pack Units:** 0
Number of Gas Piping/Pressure Test Units: 0 | **Number of Heat Pump Units:** 0 | **Number of Air Conditioning Units:** 0 | **Commercial Ductwork Additions:** No | **Number of Heating Units:** 0
Description: PRE-FAB FIREPLACE

MECH-012681-2022 | **Type:** Mechanical | **District:** Sanford | **Main Address:** 408 Valley Rd
Status: Complete | **Workclass:** Residential | **Project:** | **Parcel:** 9633-67-9851-00 | Sanford, NC 27330
Application Date: 01/07/2022 | **Issue Date:** 01/07/2022 | **Expiration:** 01/20/2023 | **Last Inspection:** 01/20/2022 | **Finaled Date:** 01/20/2022
Zone: R-20 R-20 | **Sq Ft:** 0 | **Valuation:** $0.00 | **Assigned To:**
Additional Info:
Is this a standalone Mechanical Permit?: No | **New Construction:** No | **Contractor PIN #:** 18855/21474 | **Building Permit #:** | **Items Not Shown:** 0
Residential Ductwork Additions: No | **Number of Gas Accessory Units:** 0 | **Number of Gas Heating Unit w/ A/C Units:** 0 | **Number of Gas Logs/Fireplace Units:** 0 | **Number of Gas Pack Units:** 0
Number of Gas Piping/Pressure Test Units: 0 | **Number of Heat Pump Units:** 1 | **Number of Air Conditioning Units:** 0 | **Commercial Ductwork Additions:** No | **Number of Heating Units:** 0
Acres: 0.864257 | **Subdivision:** WESTLAKE VALLEY
Description: c/o & r/c 4 TON HP & AH 8KW/10KW - Crawlspace - Duct System Replacement

---

MECH-012682-2022 | **Type:** Mechanical | **District:** Sanford | **Main Address:** 608 Hughes St
Status: Complete | **Workclass:** Residential | **Project:** | **Parcel:** 9652-12-5564-00 | Sanford, NC 27330
Application Date: 01/07/2022 | **Issue Date:** 01/07/2022 | **Expiration:** 01/13/2023 | **Last Inspection:** 01/13/2022 | **Finaled Date:** 01/13/2022
Zone: R-12 R-12 Residential Mixed | **Sq Ft:** 0 | **Valuation:** $0.00 | **Assigned To:**
Additional Info:
Is this a standalone Mechanical Permit?: No | **New Construction:** No | **Residential Ductwork Additions:** No | **Number of Gas Pack Units:** 1 | **Commercial Ductwork Additions:** No
Acres: 0.384643 | **Power Co.:** DUKE | **Subdivision:** EDGEWOOD
Description: 2.5 TON GAS ELECTRIC PACKAGE UNIT

MECH-012683-2022 | **Type:** Mechanical | **District:** Lee County (Unincorporated) | **Main Address:** 6135 St Andrews Dr
Status: Complete | **Workclass:** Residential | **Project:** | **Parcel:** 9661-90-8982-00 | Sanford, NC 27332
Application Date: 01/07/2022 | **Issue Date:** 01/07/2022 | **Expiration:** 01/13/2023 | **Last Inspection:** 01/13/2022 | **Finaled Date:** 01/13/2022
Zone: RR RR | **Sq Ft:** 0 | **Valuation:** $0.00 | **Assigned To:**
Additional Info:
Is this a standalone Mechanical Permit?: No | **New Construction:** No | **Residential Ductwork Additions:** No | **Number of Heat Pump Units:** 1 | **Commercial Ductwork Additions:** No
Acres: 0.29 | **Power Co.:** DUKE | **Subdivision:** CAROLINA TRACE

Description: 3.5 TON HEAT PUMP CHANGEOUT

MECH-012685-2022 | **Type:** Mechanical | **District:** Sanford | **Main Address:** 328 Manning Dr
Status: Issued | **Workclass:** Residential | **Project:** | **Parcel:** 9660-09-8548-00 | Sanford, NC 27332
Application Date: 01/07/2022 | **Issue Date:** 01/10/2022 | **Expiration:** 01/11/2023 | **Last Inspection:** 01/11/2022 | **Finaled Date:**
Zone: R-14 R-14 Residential Single-Family | **Sq Ft:** 0 | **Valuation:** $0.00 | **Assigned To:**
Additional Info:
Is this a standalone Mechanical Permit?: Yes | **New Construction:** No | **Contractor PIN #:** 33164 | **Building Permit #:** | **Items Not Shown:** 0
Residential Ductwork Additions: No | **Number of Gas Accessory Units:** 0 | **Number of Gas Heating Unit w/ A/C Units:** 0 | **Number of Gas Logs/Fireplace Units:** 0 | **Number of Gas Pack Units:** 0
Number of Gas Piping/Pressure Test Units: 1 | **Number of Heat Pump Units:** 0 | **Number of Air Conditioning Units:** 0 | **Commercial Ductwork Additions:** No | **Number of Heating Units:** 0
Acres: 0.57 | **Subdivision:** PARK AT SOUTH PARK PH II
Description: install 2 - 100 lb cylinders, install gas line from cylinders to fireplace

---

MECH-012686-2022 | **Type:** Mechanical | **District:** Lee County (Unincorporated) | **Main Address:** 25 H M Godfrey Ln
Status: Issued | **Workclass:** Residential | **Project:** | **Parcel:** 9675-28-5455-00 | Sanford, NC 27330
Application Date: 01/07/2022 | **Issue Date:** 01/10/2022 | **Expiration:** 01/11/2023 | **Last Inspection:** 01/11/2022 | **Finaled Date:**
Zone: RA RA Residential Agricultural | **Sq Ft:** 0 | **Valuation:** $0.00 | **Assigned To:**
Additional Info:
Is this a standalone Mechanical Permit?: Yes | **New Construction:** No | **Contractor PIN #:** 33164 | **Building Permit #:** | **Items Not Shown:** 0
Residential Ductwork Additions: No | **Number of Gas Accessory Units:** 0 | **Number of Gas Heating Unit w/ A/C Units:** 0 | **Number of Gas Logs/Fireplace Units:** 1 | **Number of Gas Pack Units:** 0
Number of Gas Piping/Pressure Test Units: 1 | **Number of Heat Pump Units:** 0 | **Number of Air Conditioning Units:** 0 | **Commercial Ductwork Additions:** No | **Number of Heating Units:** 0
Watershed: CAPE FEAR / LEE COUNTY | **Acres:** 5.36552 | **Subdivision:**
Description: Install gas lines, set tank, install gas logs

MECH-012692-2022 | **Type:** Mechanical | **District:** Sanford | **Main Address:** 531 Boulderbrook Pkwy
Status: Issued | **Workclass:** Residential | **Project:** | **Parcel:** | Sanford, NC 27330
Application Date: 01/10/2022 | **Issue Date:** 01/10/2022 | **Expiration:** 07/09/2022 | **Last Inspection:** | **Finaled Date:**
Zone: | **Sq Ft:** 0 | **Valuation:** $0.00 | **Assigned To:**
Additional Info:
Is this a standalone Mechanical Permit?: Yes | **New Construction:** Yes | **Contractor PIN #:** 29077 | **Building Permit #:** 010589 | **Items Not Shown:** 0
Residential Ductwork Additions: No | **Number of Gas Accessory Units:** 0 | **Number of Gas Heating Unit w/ A/C Units:** 0 | **Number of Gas Logs/Fireplace Units:** 0 | **Number of Gas Pack Units:** 0
Number of Gas Piping/Pressure Test Units: 2 | **Number of Heat Pump Units:** 1 | **Number of Air Conditioning Units:** 0 | **Commercial Ductwork Additions:** No | **Number of Heating Units:** 0
Description: Installing a 4 Ton split heat pump and gas lines for firepladce and cooktop.

MECH-012693-2022 **Type:** Mechanical **District:** Lee County (Unincorporated) **Main Address:** 202 Savage Ln
Status: Complete **Workclass:** Residential **Project:** **Parcel:** 9529-63-6513-00 Sanford, NC 27332
Application Date: 01/10/2022 **Issue Date:** 01/10/2022 **Expiration:** 01/27/2023 **Last Inspection:** 01/27/2022 **Finaled Date:** 01/27/2022
Zone: RA RA Residential Agricultural **Sq Ft:** 0 **Valuation:** $0.00 **Assigned To:**
Additional Info:
Is this a standalone Mechanical Permit?: No **New Construction:** No **Residential Ductwork Additions:** No **Number of Heat Pump Units:** 1 **Commercial Ductwork Additions:** No
Watershed: LITTLE RIVER / LEE COUNTY **Acres:** 2.19551 **Power Co.:** CEMC **Subdivision:**
Description: 2 TON HEATPUMP CHANGEOUT

MECH-012694-2022 **Type:** Mechanical **District:** Lee County (Unincorporated) **Main Address:** 8031 Turnberry Cir
Status: Issued **Workclass:** Residential **Project:** **Parcel:** 9670-19-4806-00 Sanford, NC 27332
Application Date: 01/10/2022 **Issue Date:** 01/11/2022 **Expiration:** 07/10/2022 **Last Inspection:** **Finaled Date:**
Zone: RR RR **Sq Ft:** 0 **Valuation:** $0.00 **Assigned To:**
Additional Info:
Is this a standalone Mechanical Permit?: Yes **New Construction:** No **Contractor PIN #:** 28280 **Building Permit #:** **Items Not Shown:** 0
Residential Ductwork Additions: No **Number of Gas Accessory Units:** 0 **Number of Gas Heating Unit w/ A/C Units:** 0 **Number of Gas Logs/Fireplace Units:** 0 **Number of Gas Pack Units:** 0
Number of Gas Piping/Pressure Test Units: 0 **Number of Heat Pump Units:** 2 **Number of Air Conditioning Units:** 0 **Commercial Ductwork Additions:** No **Number of Heating Units:** 0
Acres: 0.45 **Subdivision:** CAROLINA TRACE
Description: HVAC Changeout - 2.0 & 2.5 ton heat pump split units as well as 2.5 ton duct system.

MECH-012695-2022 **Type:** Mechanical **District:** Lee County (Unincorporated) **Main Address:** 2834 Center Church Rd
Status: Complete **Workclass:** Residential **Project:** **Parcel:** 9620-37-4253-00 Sanford, NC 27330
Application Date: 01/10/2022 **Issue Date:** 01/10/2022 **Expiration:** 01/18/2023 **Last Inspection:** 01/18/2022 **Finaled Date:** 01/18/2022
Zone: RA RA Residential Agricultural **Sq Ft:** 0 **Valuation:** $0.00 **Assigned To:**
Additional Info:
Is this a standalone Mechanical Permit?: No **New Construction:** No **Residential Ductwork Additions:** No **Number of Heat Pump Units:** 1 **Commercial Ductwork Additions:** No
Acres: 1.23694 **Power Co.:** DUKE **Subdivision:**
Description: 2 TON HEATPUMP CHANGE OUT

MECH-012699-2022 **Type:** Mechanical **District:** Sanford **Main Address:** 1908 Holiday Rd
Status: Issued **Workclass:** Residential **Project:** **Parcel:** Sanford, NC 27330
Application Date: 01/10/2022 **Issue Date:** 01/13/2022 **Expiration:** 07/12/2022 **Last Inspection:** **Finaled Date:**
Zone: **Sq Ft:** 0 **Valuation:** $0.00 **Assigned To:**
Additional Info:
Is this a standalone Mechanical Permit?: No **New Construction:** Yes **Contractor PIN #:** 24294 **Building Permit #:** 009785 **Items Not Shown:** 0
Residential Ductwork Additions: No **Number of Gas Accessory Units:** 0 **Number of Gas Heating Unit w/ A/C Units:** 0 **Number of Gas Logs/Fireplace Units:** 1 **Number of Gas Pack Units:** 0
Number of Gas Piping/Pressure Test Units: 0 **Number of Heat Pump Units:** 0 **Number of Air Conditioning Units:** 0 **Commercial Ductwork Additions:** No **Number of Heating Units:** 0
Description: PRE-FAB FIREPLACE

MECH-012702-2022 **Type:** Mechanical **District:** Lee County (Unincorporated) **Main Address:** 113 Zion Church Rd
Status: Complete **Workclass:** Residential **Project:** **Parcel:** 9666-13-1039-00 Sanford, NC 27330
Application Date: 01/10/2022 **Issue Date:** 01/10/2022 **Expiration:** 01/19/2023 **Last Inspection:** 01/19/2022 **Finaled Date:** 01/19/2022
Zone: RA RA Residential Agricultural **Sq Ft:** 0 **Valuation:** $0.00 **Assigned To:**
Additional Info:
Is this a standalone Mechanical Permit?: No **New Construction:** No **Residential Ductwork Additions:** No **Number of Gas Piping/Pressure Test Units:** 1 **Commercial Ductwork Additions:** No
Watershed: CAPE FEAR / LEE COUNTY **Acres:** 6.80122 **Power Co.:** DUKE **Subdivision:**
Description: GAS PIPING FOR GENERATIOR

MECH-012712-2022 **Type:** Mechanical **District:** Broadway **Main Address:** 208 W Harrington Ave
Status: Issued **Workclass:** Residential **Project:** **Parcel:** Broadway, NC 27505
Application Date: 01/10/2022 **Issue Date:** 01/12/2022 **Expiration:** 01/13/2023 **Last Inspection:** 01/13/2022 **Finaled Date:**
Zone: **Sq Ft:** 0 **Valuation:** $0.00 **Assigned To:**
Additional Info:
Is this a standalone Mechanical Permit?: No **New Construction:** No **Contractor PIN #:** 24294 **Building Permit #:** 011615 **Items Not Shown:** 0
Residential Ductwork Additions: No **Number of Gas Accessory Units:** 0 **Number of Gas Heating Unit w/ A/C Units:** 0 **Number of Gas Logs/Fireplace Units:** 1 **Number of Gas Pack Units:** 0
Number of Gas Piping/Pressure Test Units: 0 **Number of Heat Pump Units:** 0 **Number of Air Conditioning Units:** 0 **Commercial Ductwork Additions:** No **Number of Heating Units:** 0
Description: pre-fab fireplace

MECH-012713-2022 **Type:** Mechanical **District:** Lee County (Unincorporated) **Main Address:** 196 Canyon Creek Dr
Status: Issued **Workclass:** Residential **Project:** **Parcel:** Sanford, NC 27330
Application Date: 01/10/2022 **Issue Date:** 01/13/2022 **Expiration:** 01/12/2023 **Last Inspection:** 01/12/2022 **Finaled Date:**
Zone: **Sq Ft:** 0 **Valuation:** $0.00 **Assigned To:**
Additional Info:
Is this a standalone Mechanical Permit?: No **New Construction:** No **Contractor PIN #:** 24294 **Building Permit #:** 011819 **Items Not Shown:** 0
Residential Ductwork Additions: No **Number of Gas Accessory Units:** 0 **Number of Gas Heating Unit w/ A/C Units:** 0 **Number of Gas Logs/Fireplace Units:** 1 **Number of Gas Pack Units:** 0
Number of Gas Piping/Pressure Test Units: 0 **Number of Heat Pump Units:** 0 **Number of Air Conditioning Units:** 0 **Commercial Ductwork Additions:** No **Number of Heating Units:** 0
Description: PRE-FAB FIREPLACE

MECH-012724-2022 **Type:** Mechanical **District:** Lee County (Unincorporated) **Main Address:** 212 Maideline Ave
Status: Issued **Workclass:** Residential **Project:** **Parcel:** 9640-34-2999-00 Sanford, NC 27332
Application Date: 01/11/2022 **Issue Date:** 01/11/2022 **Expiration:** 07/10/2022 **Last Inspection:** **Finaled Date:**
Zone: RA RA Residential Agricultural **Sq Ft:** 480 **Valuation:** $10,000.00 **Assigned To:**
Additional Info:
Is this a standalone Mechanical Permit?: No **New Construction:** No **Residential Ductwork Additions:** Yes **Number of Heat Pump Units:** 0 **Commercial Ductwork Additions:** No
Number of Heating Units: 1 **Acres:** 0.898647 **Power Co.:** DUKE **Flood Zone:** AE **Subdivision:** RAYS LANDING
Description: 12' X 48' ADDITION TO FRONT OF THE HOUSE

MECH-012729-2022 **Type:** Mechanical **District:** Lee County (Unincorporated) **Main Address:** 1106 Pineside Trl
Status: Issued **Workclass:** Residential **Project:** **Parcel:** Sanford, NC 27330
Application Date: 01/11/2022 **Issue Date:** 01/12/2022 **Expiration:** 01/12/2023 **Last Inspection:** 01/12/2022 **Finaled Date:**
Zone: **Sq Ft:** 0 **Valuation:** $0.00 **Assigned To:**
Additional Info:
Is this a standalone Mechanical Permit?: No **New Construction:** Yes **Contractor PIN #:** 20391 **Building Permit #:** BRES010828-2021 **Items Not Shown:** 0
Residential Ductwork Additions: No **Number of Gas Accessory Units:** 0 **Number of Gas Heating Unit w/ A/C Units:** 0 **Number of Gas Logs/Fireplace Units:** 0 **Number of Gas Pack Units:** 0
Number of Gas Piping/Pressure Test Units: 1 **Number of Heat Pump Units:** 1 **Number of Air Conditioning Units:** 0 **Commercial Ductwork Additions:** No **Number of Heating Units:** 0
Description: Install new HVAC system (HP and AHU) in new construction home. Vent bath fans, dryer, range hood and gas line for range. New Ductwork

---

MECH-012730-2022 **Type:** Mechanical **District:** Sanford **Main Address:** 309 Manning
Status: Issued **Workclass:** Residential **Project:** **Parcel:** 9660-09-8122-00 Sanford, NC 27332
Application Date: 01/11/2022 **Issue Date:** 01/13/2022 **Expiration:** 07/12/2022 **Last Inspection:** **Finaled Date:**
Zone: R-14 R-14 Residential Single-Family **Sq Ft:** 0 **Valuation:** $0.00 **Assigned To:**
Additional Info:
Is this a standalone Mechanical Permit?: No **New Construction:** Yes **Contractor PIN #:** 28846 **Building Permit #:** 9792 **Items Not Shown:** 0
Residential Ductwork Additions: No **Number of Gas Accessory Units:** 0 **Number of Gas Heating Unit w/ A/C Units:** 0 **Number of Gas Logs/Fireplace Units:** 0 **Number of Gas Pack Units:** 0
Number of Gas Piping/Pressure Test Units: 0 **Number of Heat Pump Units:** 1 **Number of Air Conditioning Units:** 0 **Commercial Ductwork Additions:** No **Number of Heating Units:** 0
Acres: 0.49 **Subdivision:** PARK AT SOUTH PARK PH II
Description: Install Goodman 3 Ton SHP
10KW Heat Strips
Mitsubishi 9k Mini Split
2x 50 CFM Bath Fans
All New Duct Work

MECH-012731-2022 **Type:** Mechanical **District:** Sanford **Main Address:** 301 Manning Dr
Status: Issued **Workclass:** Residential **Project:** **Parcel:** 9660-08-8956-00 Sanford, NC 27330
Application Date: 01/11/2022 **Issue Date:** 01/13/2022 **Expiration:** 07/12/2022 **Last Inspection:** **Finaled Date:**
Zone: R-14 R-14 Residential Single-Family **Sq Ft:** 0 **Valuation:** $0.00 **Assigned To:**
Additional Info:
Subdivision: PARK AT SOUTH PARK PH II **Is this a standalone Mechanical Permit?:** No **New Construction:** Yes **Contractor PIN #:** 28846 **Building Permit #:** 9789
Items Not Shown: 0 **Residential Ductwork Additions:** No **Number of Gas Accessory Units:** 0 **Number of Gas Heating Unit w/ A/C Units:** 0 **Number of Gas Logs/Fireplace Units:** 0
Number of Gas Pack Units: 0 **Number of Gas Piping/Pressure Test Units:** 0 **Number of Heat Pump Units:** 1 **Number of Air Conditioning Units:** 0 **Commercial Ductwork Additions:** No
Number of Heating Units: 0 **Acres:** 0.49

Description: Install Goodman 3 Ton SHP
10KW Heat Strips
4 x 50 CFM Bath Fans
Zone Controls
All New Duct Work

MECH-012732-2022 | **Type:** Mechanical | **District:** Sanford | **Main Address:** 305 Manning Dr
Status: Issued | **Workclass:** Residential | **Project:** | **Parcel:** 9660-09-8023-00 | Sanford, NC 27330
Application Date: 01/11/2022 | **Issue Date:** 01/13/2022 | **Expiration:** 07/12/2022 | **Last Inspection:** | **Finaled Date:**
Zone: R-14 R-14 Residential Single-Family | **Sq Ft:** 0 | **Valuation:** $0.00 | **Assigned To:**
Additional Info:
Is this a standalone Mechanical Permit?: No | **New Construction:** Yes | **Contractor PIN #:** 28846 | **Building Permit #:** 9791 | **Items Not Shown:** 0
Residential Ductwork Additions: No | **Number of Gas Accessory Units:** 0 | **Number of Gas Heating Unit w/ A/C Units:** 0 | **Number of Gas Logs/Fireplace Units:** 0 | **Number of Gas Pack Units:** 0
Number of Gas Piping/Pressure Test Units: 0 | **Number of Heat Pump Units:** 1 | **Number of Air Conditioning Units:** 0 | **Commercial Ductwork Additions:** No | **Number of Heating Units:** 0
Acres: 0.42 | **Subdivision:** PARK AT SOUTH PARK PH II

Description: Install Goodman 3.5 Ton SHP
10KW Heat Strips
5 x 50 CFM Bath Fans
Zone Controls
All New Duct Work

MECH-012733-2022 | **Type:** Mechanical | **District:** Lee County (Unincorporated) | **Main Address:** 4901 Hunter Rd
Status: Issued | **Workclass:** Residential | **Project:** | **Parcel:** 9640-41-1549-00 | Sanford, NC 27332
Application Date: 01/11/2022 | **Issue Date:** 01/13/2022 | **Expiration:** 07/12/2022 | **Last Inspection:** | **Finaled Date:**
Zone: RA/MH RA/MH | **Sq Ft:** 0 | **Valuation:** $0.00 | **Assigned To:**
Additional Info:
Is this a standalone Mechanical Permit?: No | **New Construction:** Yes | **Contractor PIN #:** 28846 | **Building Permit #:** 11656 | **Items Not Shown:** 0
Residential Ductwork Additions: No | **Number of Gas Accessory Units:** 0 | **Number of Gas Heating Unit w/ A/C Units:** 0 | **Number of Gas Logs/Fireplace Units:** 0 | **Number of Gas Pack Units:** 0
Number of Gas Piping/Pressure Test Units: 0 | **Number of Heat Pump Units:** 1 | **Number of Air Conditioning Units:** 0 | **Commercial Ductwork Additions:** No | **Number of Heating Units:** 0
Acres: 0.999179 | **Subdivision:** DEERFIELD

Description: Install Goodman 3 Ton SHP
10KW Heat Strips
3x 50 CFM Bath Fans
Zone Controls
All New Duct Work

MECH-012734-2022 | **Type:** Mechanical | **District:** Sanford | **Main Address:** 310 Mcneill Rd
Status: Complete | **Workclass:** Non-Residential | **Project:** | **Parcel:** 9634-80-3881-00 | Sanford, NC 27330
Application Date: 01/11/2022 | **Issue Date:** 01/14/2022 | **Expiration:** 01/25/2023 | **Last Inspection:** 01/25/2022 | **Finaled Date:** 01/25/2022
Zone: LI LI Light Industrial | **Sq Ft:** 0 | **Valuation:** $0.00 | **Assigned To:**
Additional Info:
Is this a standalone Mechanical Permit?: No | **New Construction:** No | **Contractor PIN #:** 19738 | **Building Permit #:** | **Boiler Tons:** 0

Chiller Tons: 0 **Gas Pack Tons:** 0 **Residential Ductwork Additions:** No **Heat Pump Tons:** 3.5 **Refrigeration Tons:** 0
Gas Appliance BTUs: 0 **Gas Heating Unit BTUs:** 0 **Gas Heating Units w/ A/C Unit BTUs:** 0 **Gas Piping/Pressure Test Units:** 0 **Commercial Ductwork Additions:** No
Canopy Hood Units: 0 **Acres:** 17.2081 **Power Co.:** DUKE **Flood Zone:** SHADED X, AE **Subdivision:**

MECH-012736-2022 **Type:** Mechanical **District:** Lee County (Unincorporated) **Main Address:** 2009 Cedar Lake Rd
Status: Issued **Workclass:** Residential **Project:** **Parcel:** 9657-40-0104-00 Sanford, NC 27330
Application Date: 01/11/2022 **Issue Date:** 01/28/2022 **Expiration:** 07/27/2022 **Last Inspection:** **Finaled Date:**
Zone: RA RA Residential Agricultural **Sq Ft:** 0 **Valuation:** $0.00 **Assigned To:**
Additional Info:
Is this a standalone Mechanical Permit?: Yes **New Construction:** No **Contractor PIN #:** 31596 **Building Permit #:** **Items Not Shown:** 0
Residential Ductwork Additions: Yes **Number of Gas Accessory Units:** 0 **Number of Gas Heating Unit w/ A/C Units:** 0 **Number of Gas Logs/Fireplace Units:** 0 **Number of Gas Pack Units:** 0
Number of Gas Piping/Pressure Test Units: 0 **Number of Heat Pump Units:** 0 **Number of Air Conditioning Units:** 0 **Commercial Ductwork Additions:** No **Number of Heating Units:** 0
Acres: 1.78262 **Subdivision:** CEDAR LAKE
Description: 3 TON DUCT SYSTEM

MECH-012737-2022 **Type:** Mechanical **District:** Sanford **Main Address:** 3509 Cameron Rd
Status: Complete **Workclass:** Residential **Project:** **Parcel:** 9651-87-8142-00 Sanford, NC 27332
Application Date: 01/11/2022 **Issue Date:** 01/12/2022 **Expiration:** 01/19/2023 **Last Inspection:** 01/19/2022 **Finaled Date:** 01/19/2022
Zone: LI LI Light Industrial **Sq Ft:** 0 **Valuation:** $0.00 **Assigned To:**
Additional Info:
Is this a standalone Mechanical Permit?: Yes **New Construction:** No **Contractor PIN #:** 18855/21474 **Building Permit #:** **Items Not Shown:** 0
Residential Ductwork Additions: No **Number of Gas Accessory Units:** 0 **Number of Gas Heating Unit w/ A/C Units:** 0 **Number of Gas Logs/Fireplace Units:** 0 **Number of Gas Pack Units:** 0
Number of Gas Piping/Pressure Test Units: 0 **Number of Heat Pump Units:** 1 **Number of Air Conditioning Units:** 0 **Commercial Ductwork Additions:** No **Number of Heating Units:** 0
Acres: 1.22267 **Subdivision:** JONESBORO INDUSTRIAL PARK
Description: c/o & r/c 2 Ton HP & AH - Attic/Above gym

MECH-012738-2022 **Type:** Mechanical **District:** Sanford **Main Address:** 915 Stoney Brook Dr
Status: Complete **Workclass:** Residential **Project:** **Parcel:** 9633-11-8294-00 Sanford, NC 27330
Application Date: 01/11/2022 **Issue Date:** 01/12/2022 **Expiration:** 01/28/2023 **Last Inspection:** 01/28/2022 **Finaled Date:** 01/28/2022
Zone: R-20 R-20 **Sq Ft:** 0 **Valuation:** $0.00 **Assigned To:**
Additional Info:
Is this a standalone Mechanical Permit?: Yes **New Construction:** No **Contractor PIN #:** 28280 **Building Permit #:** **Items Not Shown:** 0
Residential Ductwork Additions: No **Number of Gas Accessory Units:** 0 **Number of Gas Heating Unit w/ A/C Units:** 0 **Number of Gas Logs/Fireplace Units:** 0 **Number of Gas Pack Units:** 0
Number of Gas Piping/Pressure Test Units: 0 **Number of Heat Pump Units:** 1 **Number of Air Conditioning Units:** 0 **Commercial Ductwork Additions:** No **Number of Heating Units:** 0
Watershed: DEEP RIVER / LEE COUNTY **Acres:** 0.710217 **Subdivision:** WESTCROFT
Description: HVAC changeout in crawl space

MECH-012739-2022 **Type:** Mechanical **District:** Broadway ETJ **Main Address:** 72 Green Acres Dr
Status: Issued **Workclass:** Residential **Project:** **Parcel:** Broadway, NC 27505
Application Date: 01/12/2022 **Issue Date:** 01/12/2022 **Expiration:** 01/13/2023 **Last Inspection:** 01/13/2022 **Finaled Date:**
Zone: **Sq Ft:** 0 **Valuation:** $0.00 **Assigned To:**
Additional Info:
Is this a standalone Mechanical Permit?: No **New Construction:** Yes **Contractor PIN #:** 2680 **Building Permit #:** BRES-011999-2021 **Items Not Shown:** 0
Residential Ductwork Additions: No **Number of Gas Accessory Units:** 0 **Number of Gas Heating Unit w/ A/C Units:** 0 **Number of Gas Logs/Fireplace Units:** 0 **Number of Gas Pack Units:** 0
Number of Gas Piping/Pressure Test Units: 0 **Number of Heat Pump Units:** 1 **Number of Air Conditioning Units:** 0 **Commercial Ductwork Additions:** No **Number of Heating Units:** 0
Description: 3 ton heat pump

MECH-012740-2022 **Type:** Mechanical **District:** Broadway ETJ **Main Address:** 88 Green Acres Dr
Status: Issued **Workclass:** Residential **Project:** **Parcel:** Broadway, NC 27505
Application Date: 01/12/2022 **Issue Date:** 01/12/2022 **Expiration:** 01/20/2023 **Last Inspection:** 01/20/2022 **Finaled Date:**
Zone: **Sq Ft:** 0 **Valuation:** $0.00 **Assigned To:**
Additional Info:
Is this a standalone Mechanical Permit?: No **New Construction:** Yes **Contractor PIN #:** 2680 **Building Permit #:** BRES-011998-2021 **Items Not Shown:** 0
Residential Ductwork Additions: No **Number of Gas Accessory Units:** 0 **Number of Gas Heating Unit w/ A/C Units:** 0 **Number of Gas Logs/Fireplace Units:** 0 **Number of Gas Pack Units:** 0
Number of Gas Piping/Pressure Test Units: 0 **Number of Heat Pump Units:** 1 **Number of Air Conditioning Units:** 0 **Commercial Ductwork Additions:** No **Number of Heating Units:** 0
Description: 3 ton heat pump

MECH-012741-2022 **Type:** Mechanical **District:** Broadway **Main Address:** 83 Green Acres Dr
Status: Issued **Workclass:** Residential **Project:** **Parcel:** Broadway, NC 27505
Application Date: 01/12/2022 **Issue Date:** 01/12/2022 **Expiration:** 01/29/2023 **Last Inspection:** 01/29/2022 **Finaled Date:**
Zone: **Sq Ft:** 0 **Valuation:** $0.00 **Assigned To:**
Additional Info:
Is this a standalone Mechanical Permit?: No **New Construction:** Yes **Contractor PIN #:** 2680 **Building Permit #:** BRES-012204-2021 **Items Not Shown:** 0
Residential Ductwork Additions: No **Number of Gas Accessory Units:** 0 **Number of Gas Heating Unit w/ A/C Units:** 0 **Number of Gas Logs/Fireplace Units:** 0 **Number of Gas Pack Units:** 0
Number of Gas Piping/Pressure Test Units: 0 **Number of Heat Pump Units:** 1 **Number of Air Conditioning Units:** 0 **Commercial Ductwork Additions:** No **Number of Heating Units:** 0
Description: 3.5 ton heat pump

MECH-012743-2022 **Type:** Mechanical **District:** Lee County (Unincorporated) **Main Address:** 120 Lexington Dr
Status: Issued **Workclass:** Residential **Project:** **Parcel:** Sanford, NC 27332
Application Date: 01/12/2022 **Issue Date:** 01/13/2022 **Expiration:** 01/18/2023 **Last Inspection:** 01/18/2022 **Finaled Date:**
Zone: **Sq Ft:** 0 **Valuation:** $0.00 **Assigned To:**
Additional Info:
Is this a standalone Mechanical Permit?: No **New Construction:** Yes **Contractor PIN #:** 2680 **Building Permit #:** BRES-012110-2021 **Items Not Shown:** 0
Residential Ductwork Additions: No **Number of Gas Accessory Units:** 0 **Number of Gas Heating Unit w/ A/C Units:** 0 **Number of Gas Logs/Fireplace Units:** 0 **Number of Gas Pack Units:** 0
Number of Gas Piping/Pressure Test Units: 0 **Number of Heat Pump Units:** 1 **Number of Air Conditioning Units:** 0 **Commercial Ductwork Additions:** No **Number of Heating Units:** 0

Description: 3 ton heat pump

MECH-012744-2022 | **Type:** Mechanical | **District:** Lee County (Unincorporated) | **Main Address:** 124 Lexington Dr
Status: Issued | **Workclass:** Residential | **Project:** | **Parcel:** | Sanford, NC 27332
Application Date: 01/12/2022 | **Issue Date:** 01/14/2022 | **Expiration:** 01/27/2023 | **Last Inspection:** 01/27/2022 | **Finaled Date:**
Zone: | **Sq Ft:** 0 | **Valuation:** $0.00 | **Assigned To:**
Additional Info:
Is this a standalone Mechanical Permit?: No | **New Construction:** Yes | **Contractor PIN #:** 2680 | **Building Permit #:** BRES-012114-2021 | **Items Not Shown:** 0
Residential Ductwork Additions: No | **Number of Gas Accessory Units:** 0 | **Number of Gas Heating Unit w/ A/C Units:** 0 | **Number of Gas Logs/Fireplace Units:** 0 | **Number of Gas Pack Units:** 0
Number of Gas Piping/Pressure Test Units: 0 | **Number of Heat Pump Units:** 1 | **Number of Air Conditioning Units:** 0 | **Commercial Ductwork Additions:** No | **Number of Heating Units:** 0
Description: 3.5 ton heat pump

MECH-012745-2022 | **Type:** Mechanical | **District:** Lee County (Unincorporated) | **Main Address:** 205 Kensington Dr
Status: Issued | **Workclass:** Residential | **Project:** | **Parcel:** | Sanford, NC 27332
Application Date: 01/12/2022 | **Issue Date:** 01/13/2022 | **Expiration:** 01/14/2023 | **Last Inspection:** 01/14/2022 | **Finaled Date:**
Zone: | **Sq Ft:** 0 | **Valuation:** $0.00 | **Assigned To:**
Additional Info:
Is this a standalone Mechanical Permit?: No | **New Construction:** Yes | **Contractor PIN #:** 2680 | **Building Permit #:** BRES-012112-2021 | **Items Not Shown:** 0
Residential Ductwork Additions: No | **Number of Gas Accessory Units:** 0 | **Number of Gas Heating Unit w/ A/C Units:** 0 | **Number of Gas Logs/Fireplace Units:** 0 | **Number of Gas Pack Units:** 0
Number of Gas Piping/Pressure Test Units: 1 | **Number of Heat Pump Units:** 1 | **Number of Air Conditioning Units:** 0 | **Commercial Ductwork Additions:** No | **Number of Heating Units:** 0
Description: 3 ton heat pump with gas drop

MECH-012749-2022 | **Type:** Mechanical | **District:** Sanford | **Main Address:** 120 S Steele St
Status: Issued | **Workclass:** Non-Residential | **Project:** | **Parcel:** 9642-69-7701-00 | Sanford, NC 27330
Application Date: 01/12/2022 | **Issue Date:** 01/24/2022 | **Expiration:** 07/23/2022 | **Last Inspection:** | **Finaled Date:**
Zone: CBD CBD Central Business | **Sq Ft:** 0 | **Valuation:** $0.00 | **Assigned To:**
Additional Info:
Is this a standalone Mechanical Permit?: Yes | **New Construction:** No | **Contractor PIN #:** 28280 | **Building Permit #:** | **Boiler Tons:** 0
Chiller Tons: 0 | **Gas Pack Tons:** 0 | **Residential Ductwork Additions:** No | **Heat Pump Tons:** 7 | **Refrigeration Tons:** 0
Gas Appliance BTUs: 0 | **Gas Heating Unit BTUs:** 0 | **Gas Heating Units w/ A/C Unit BTUs:** 0 | **Gas Piping/Pressure Test Units:** 0 | **Commercial Ductwork Additions:** Yes
Canopy Hood Units: 0 | **Historic District:** DOWNTOWN | **Acres:** 0.0942514 | **Subdivision:**
Description: HP split systems - 7 tons total, 4 duct systems.

MECH-012751-2022 | **Type:** Mechanical | **District:** Lee County (Unincorporated) | **Main Address:** 600 Doe Run Dr
Status: Complete | **Workclass:** Residential | **Project:** | **Parcel:** 9667-34-7251-00 | Sanford, NC 27330
Application Date: 01/12/2022 | **Issue Date:** 01/12/2022 | **Expiration:** 01/19/2023 | **Last Inspection:** 01/19/2022 | **Finaled Date:** 01/19/2022
Zone: RR RR | **Sq Ft:** 0 | **Valuation:** $0.00 | **Assigned To:**
Additional Info:
Is this a standalone Mechanical Permit?: Yes | **New Construction:** No | **Residential Ductwork Additions:** No | **Number of Heat Pump Units:** 1 | **Commercial Ductwork Additions:** No
Watershed: CAPE FEAR / LEE COUNTY | **Acres:** 5.43658 | **Power Co.:** DUKE | **Subdivision:**

Description: PROPOSED 3.5 TON HEATPUMP INSTALL

MECH-012755-2022 | **Type:** Mechanical | **District:** Lee County (Unincorporated) | **Main Address:** 425 Panners Sanford, NC 27330
Status: Issued | **Workclass:** Residential | **Project:** | **Parcel:** 9666-36-2168-00
Application Date: 01/13/2022 | **Issue Date:** 01/19/2022 | **Expiration:** 07/18/2022 | **Last Inspection:** | **Finaled Date:**
Zone: RA RA Residential Agricultural | **Sq Ft:** 0 | **Valuation:** $0.00 | **Assigned To:**
Additional Info:
Is this a standalone Mechanical Permit?: Yes | **New Construction:** No | **Contractor PIN #:** 23348 | **Building Permit #:** | **Items Not Shown:** 0
Residential Ductwork Additions: No | **Number of Gas Accessory Units:** 0 | **Number of Gas Heating Unit w/ A/C Units:** 0 | **Number of Gas Logs/Fireplace Units:** 0 | **Number of Gas Pack Units:** 0
Number of Gas Piping/Pressure Test Units: 0 | **Number of Heat Pump Units:** 1 | **Number of Air Conditioning Units:** 0 | **Commercial Ductwork Additions:** No | **Number of Heating Units:** 0
Watershed: CAPE FEAR / LEE COUNTY | **Acres:** 1.03303 | **Subdivision:** COPPER RIDGE
Description: Install new 4.0 ton HP 16 seer (outside unit), 4.0 ton A/H, & 15 kw H/S. A/H installed in attic.

PLEASE COMPLETE AND ATTACH MECHANICAL PEMRIT APPLICATION TO CSS PORTAL

MECH-012761-2022 | **Type:** Mechanical | **District:** Sanford | **Main Address:** 601 N Fifth St Sanford, NC 27330
Status: Issued | **Workclass:** Non-Residential | **Project:** | **Parcel:** 9643-83-6804-00
Application Date: 01/13/2022 | **Issue Date:** 01/13/2022 | **Expiration:** 01/14/2023 | **Last Inspection:** 01/14/2022 | **Finaled Date:**
Zone: LI LI Light Industrial | **Sq Ft:** 0 | **Valuation:** $0.00 | **Assigned To:**
Additional Info:
Is this a standalone Mechanical Permit?: No | **New Construction:** Yes | **Contractor PIN #:** 23371 | **Building Permit #:** 11025 | **Boiler Tons:** 0
Chiller Tons: 0 | **Gas Pack Tons:** 0 | **Residential Ductwork Additions:** No | **Heat Pump Tons:** 0 | **Refrigeration Tons:** 0
Gas Appliance BTUs: 0 | **Gas Heating Unit BTUs:** 0 | **Gas Heating Units w/ A/C Unit BTUs:** 0 | **Gas Piping/Pressure Test Units:** 0 | **Commercial Ductwork Additions:** Yes
Canopy Hood Units: 0 | **Acres:** 12.3183 | **Subdivision:**
Description: Ductwork Alteration

MECH-012762-2022 | **Type:** Mechanical | **District:** Lee County (Unincorporated) | **Main Address:** 2328 Swanns Station Rd Sanford, NC 27332
Status: Issued | **Workclass:** Residential | **Project:** | **Parcel:** 9670-88-6530-00
Application Date: 01/13/2022 | **Issue Date:** 01/13/2022 | **Expiration:** 01/14/2023 | **Last Inspection:** 01/14/2022 | **Finaled Date:**
Zone: RA RA Residential Agricultural | **Sq Ft:** 0 | **Valuation:** $0.00 | **Assigned To:**
Additional Info:
Is this a standalone Mechanical Permit?: Yes | **New Construction:** No | **Contractor PIN #:** 33164 | **Building Permit #:** | **Items Not Shown:** 0
Residential Ductwork Additions: No | **Number of Gas Accessory Units:** 1 | **Number of Gas Heating Unit w/ A/C Units:** 0 | **Number of Gas Logs/Fireplace Units:** 0 | **Number of Gas Pack Units:** 0
Number of Gas Piping/Pressure Test Units: 1 | **Number of Heat Pump Units:** 0 | **Number of Air Conditioning Units:** 0 | **Commercial Ductwork Additions:** No | **Number of Heating Units:** 0
Acres: 55.2935 | **Subdivision:**
Description: Install gas range, install gas line from existing gas line to range

---

MECH-012763-2022 **Type:** Mechanical **District:** Sanford **Main Address:** 2919 Beechtree Dr
Status: Issued **Workclass:** Non-Residential **Project:** **Parcel:** Sanford, NC 27330
Application Date: 01/13/2022 **Issue Date:** 01/13/2022 **Expiration:** 01/31/2023 **Last Inspection:** 01/31/2022 **Finaled Date:**
Zone: **Sq Ft:** 0 **Valuation:** $0.00 **Assigned To:**
Additional Info:
Is this a standalone Mechanical Permit?: Yes **New Construction:** No **Contractor PIN #:** 33772 **Building Permit #:** 12460 **Boiler Tons:** 0
Chiller Tons: 0 **Gas Pack Tons:** 0 **Residential Ductwork Additions:** No **Heat Pump Tons:** 0 **Refrigeration Tons:** 0
Gas Appliance BTUs: 0 **Gas Heating Unit BTUs:** 0 **Gas Heating Units w/ A/C Unit BTUs:** 0 **Gas Piping/Pressure Test Units:** 0 **Commercial Ductwork Additions:** Yes
Canopy Hood Units: 0
Description: VAV Fan Powered Units. Ductwork Additions.

MECH-012765-2022 **Type:** Mechanical **District:** Lee County (Unincorporated) **Main Address:** 2721 Tramway Rd
Status: Issued **Workclass:** Non-Residential **Project:** **Parcel:** 9631-94-2157-00 Sanford, NC 27332
Application Date: 01/13/2022 **Issue Date:** 01/14/2022 **Expiration:** 01/19/2023 **Last Inspection:** 01/19/2022 **Finaled Date:**
Zone: LI LI Light Industrial **Sq Ft:** 0 **Valuation:** $0.00 **Assigned To:**
Additional Info:
Gas Appliance BTUs: 0 **Gas Heating Unit BTUs:** 0 **Gas Heating Units w/ A/C Unit BTUs:** 0 **Gas Piping/Pressure Test Units:** 0 **Commercial Ductwork Additions:** Yes
Canopy Hood Units: 0 **Acres:** 2.0433 **Subdivision:** **Is this a standalone Mechanical Permit?:** No **New Construction:** Yes
Contractor PIN #: 24751 **Building Permit #:** 011974-2021 **Boiler Tons:** 0 **Chiller Tons:** 0 **Gas Pack Tons:** 0
Residential Ductwork Additions: No **Heat Pump Tons:** 4 **Refrigeration Tons:** 0
Description: install of 4 ton VRF system with associated ductwork and ERV

MECH-012766-2022 **Type:** Mechanical **District:** Sanford **Main Address:** 1516 Brentwood Pl
Status: Issued **Workclass:** Residential **Project:** **Parcel:** 9633-73-7860-00 Sanford, NC 27330
Application Date: 01/13/2022 **Issue Date:** 01/13/2022 **Expiration:** 01/14/2023 **Last Inspection:** 01/14/2022 **Finaled Date:**
Zone: R-20 R-20 **Sq Ft:** 0 **Valuation:** $0.00 **Assigned To:**
Additional Info:
Is this a standalone Mechanical Permit?: Yes **New Construction:** No **Contractor PIN #:** 33164 **Building Permit #:** **Items Not Shown:** 0
Residential Ductwork Additions: No **Number of Gas Accessory Units:** 0 **Number of Gas Heating Unit w/ A/C Units:** 0 **Number of Gas Logs/Fireplace Units:** 0 **Number of Gas Pack Units:** 0
Number of Gas Piping/Pressure Test Units: 1 **Number of Heat Pump Units:** 0 **Number of Air Conditioning Units:** 0 **Commercial Ductwork Additions:** No **Number of Heating Units:** 0
Acres: 1.87888 **Subdivision:** WESTLAKE VALLEY
Description: install gas line to connect logs

MECH-012769-2022 **Type:** Mechanical **District:** Sanford **Main Address:** 1722 Wilkins Dr
Status: Issued **Workclass:** Residential **Project:** **Parcel:** 9633-83-7942-00 Sanford, NC 27330
Application Date: 01/13/2022 **Issue Date:** 01/14/2022 **Expiration:** 01/28/2023 **Last Inspection:** 01/28/2022 **Finaled Date:**
Zone: R-20 R-20 **Sq Ft:** 0 **Valuation:** $0.00 **Assigned To:**
Additional Info:
Is this a standalone Mechanical Permit?: Yes **New Construction:** No **Contractor PIN #:** 23371 **Building Permit #:** 010687 **Items Not Shown:** 0
Residential Ductwork Additions: No **Number of Gas Accessory Units:** 0 **Number of Gas Heating Unit w/ A/C Units:** 0 **Number of Gas Logs/Fireplace Units:** 0 **Number of Gas Pack Units:** 0

Number of Gas Piping/Pressure Test Units: 0 | **Number of Heat Pump Units:** 1 | **Number of Air Conditioning Units:** 0 | **Commercial Ductwork Additions:** No | **Number of Heating Units:** 0
Acres: 1.28767 | **Subdivision:**
Description: 3.0 ton split heat pump with ductwork

MECH-012775-2022 | **Type:** Mechanical | **District:** Sanford | **Main Address:** 539 Summit Dr
Status: Complete | **Workclass:** Residential | **Project:** | **Parcel:** 9642-49-1747-00 | Sanford, NC 27330
Application Date: 01/13/2022 | **Issue Date:** 01/14/2022 | **Expiration:** 01/28/2023 | **Last Inspection:** 01/28/2022 | **Finaled Date:** 01/28/2022
Zone: R-12 R-12 Residential Mixed | **Sq Ft:** 0 | **Valuation:** $0.00 | **Assigned To:**
Additional Info:
Is this a standalone Mechanical Permit?: Yes | **New Construction:** No | **Contractor PIN #:** 18855/21474 | **Building Permit #:** | **Items Not Shown:** 0
Residential Ductwork Additions: No | **Number of Gas Accessory Units:** 0 | **Number of Gas Heating Unit w/ A/C Units:** 0 | **Number of Gas Logs/Fireplace Units:** 0 | **Number of Gas Pack Units:** 0
Number of Gas Piping/Pressure Test Units: 0 | **Number of Heat Pump Units:** 1 | **Number of Air Conditioning Units:** 0 | **Commercial Ductwork Additions:** No | **Number of Heating Units:** 0
Acres: 0.214348 | **Subdivision:** MCIVER PARK
Description: c/o & r/c 1.5 Ton HP & AH 5KW - Attic/Upstairs

MECH-012781-2022 | **Type:** Mechanical | **District:** Sanford | **Main Address:** 412 Mcleod Dr
Status: Complete | **Workclass:** Residential | **Project:** | **Parcel:** 9632-77-9242-00 | Sanford, NC 27330
Application Date: 01/14/2022 | **Issue Date:** 01/18/2022 | **Expiration:** 01/20/2023 | **Last Inspection:** 01/20/2022 | **Finaled Date:** 01/20/2022
Zone: R-20 R-20 | **Sq Ft:** 0 | **Valuation:** $0.00 | **Assigned To:**
Additional Info:
Is this a standalone Mechanical Permit?: Yes | **New Construction:** No | **Contractor PIN #:** 23371 | **Building Permit #:** 012377 | **Items Not Shown:** 0
Residential Ductwork Additions: No | **Number of Gas Accessory Units:** 0 | **Number of Gas Heating Unit w/ A/C Units:** 0 | **Number of Gas Logs/Fireplace Units:** 0 | **Number of Gas Pack Units:** 0
Number of Gas Piping/Pressure Test Units: 0 | **Number of Heat Pump Units:** 1 | **Number of Air Conditioning Units:** 0 | **Commercial Ductwork Additions:** No | **Number of Heating Units:** 0
Acres: 0.509219 | **Subdivision:** COLONIAL ACRES
Description: Installation of a 12k mini split

MECH-012783-2022 | **Type:** Mechanical | **District:** Sanford | **Main Address:** 1908 Holiday Rd
Status: Issued | **Workclass:** Residential | **Project:** | **Parcel:** 9633-46-0284-00 | Sanford, NC 27330
Application Date: 01/14/2022 | **Issue Date:** 01/14/2022 | **Expiration:** 07/13/2022 | **Last Inspection:** | **Finaled Date:**
Zone: R-20 R-20 | **Sq Ft:** 4,846 | **Valuation:** $425,000.00 | **Assigned To:**
Additional Info:
Is this a standalone Mechanical Permit?: Yes | **New Construction:** No | **Building Permit #:** BRES-009785-2021 | **Residential Ductwork Additions:** No | **Number of Gas Heating Unit w/ A/C Units:** 2
Number of Gas Piping/Pressure Test Units: 6 | **Number of Heat Pump Units:** 1 | **Commercial Ductwork Additions:** No | **Acres:** 1.1705 | **Power Co.:** DUKE
Subdivision:
Description: NEW SFD

MECH-012784-2022 **Type:** Mechanical **District:** Lee County (Unincorporated) **Main Address:** 420 Cricket Hearth Rd
Status: Issued **Workclass:** Residential **Project:** **Parcel:** 9623-11-5285-00 Sanford, NC 27330
Application Date: 01/14/2022 **Issue Date:** 01/18/2022 **Expiration:** 07/17/2022 **Last Inspection:** **Finaled Date:**
Zone: RR RR **Sq Ft:** 0 **Valuation:** $0.00 **Assigned To:**
Additional Info:
Is this a standalone Mechanical Permit?: No **New Construction:** No **Contractor PIN #:** 18855/21474 **Building Permit #:** **Items Not Shown:** 0
Residential Ductwork Additions: No **Number of Gas Accessory Units:** 0 **Number of Gas Heating Unit w/ A/C Units:** 0 **Number of Gas Logs/Fireplace Units:** 0 **Number of Gas Pack Units:** 0
Number of Gas Piping/Pressure Test Units: 0 **Number of Heat Pump Units:** 1 **Number of Air Conditioning Units:** 0 **Commercial Ductwork Additions:** No **Number of Heating Units:** 0
Watershed: DEEP RIVER / LEE COUNTY **Acres:** 0.881774 **Subdivision:** WINDING CREEK FARM
Description: c/o & r/c 2 Ton HP & AH 5KW - Attic - Like for Like

---

MECH-012786-2022 **Type:** Mechanical **District:** Lee County (Unincorporated) **Main Address:** 1496 White Hill Rd
Status: Issued **Workclass:** Residential **Project:** **Parcel:** 9529-57-4780-00 Sanford, NC 27332
Application Date: 01/14/2022 **Issue Date:** 01/18/2022 **Expiration:** 07/17/2022 **Last Inspection:** **Finaled Date:**
Zone: RA RA Residential Agricultural **Sq Ft:** 0 **Valuation:** $0.00 **Assigned To:**
Additional Info:
Is this a standalone Mechanical Permit?: Yes **New Construction:** No **Contractor PIN #:** 23371 **Building Permit #:** **Items Not Shown:** 0
Residential Ductwork Additions: No **Number of Gas Accessory Units:** 0 **Number of Gas Heating Unit w/ A/C Units:** 0 **Number of Gas Logs/Fireplace Units:** 0 **Number of Gas Pack Units:** 0
Number of Gas Piping/Pressure Test Units: 0 **Number of Heat Pump Units:** 1 **Number of Air Conditioning Units:** 0 **Commercial Ductwork Additions:** No **Number of Heating Units:** 0
Acres: 1.48 **Subdivision:**
Description: 3.5 ton split heat pump with ductwork

MECH-012790-2022 **Type:** Mechanical **District:** Sanford **Main Address:** 108 Roundrock Ln
Status: Issued **Workclass:** Residential **Project:** **Parcel:** Sanford, NC 27330
Application Date: 01/17/2022 **Issue Date:** 01/18/2022 **Expiration:** 07/17/2022 **Last Inspection:** **Finaled Date:**
Zone: **Sq Ft:** 0 **Valuation:** $0.00 **Assigned To:**
Additional Info:
Is this a standalone Mechanical Permit?: Yes **New Construction:** Yes **Contractor PIN #:** 29077 **Building Permit #:** **Items Not Shown:** 0
Residential Ductwork Additions: No **Number of Gas Accessory Units:** 0 **Number of Gas Heating Unit w/ A/C Units:** 0 **Number of Gas Logs/Fireplace Units:** 0 **Number of Gas Pack Units:** 0
Number of Gas Piping/Pressure Test Units: 3 **Number of Heat Pump Units:** 1 **Number of Air Conditioning Units:** 0 **Commercial Ductwork Additions:** No **Number of Heating Units:** 0
Description: Installing a 3 ton split heat pump and gas lines for range, water heater, and fireplace.

MECH-012791-2022 **Type:** Mechanical **District:** Sanford **Main Address:** 2006 Lord Ashley Dr
Status: Issued **Workclass:** Residential **Project:** **Parcel:** 9633-44-3950-00 Sanford, NC 27330
Application Date: 01/18/2022 **Issue Date:** 01/18/2022 **Expiration:** 01/20/2023 **Last Inspection:** 01/20/2022 **Finaled Date:**
Zone: R-20 R-20 **Sq Ft:** 0 **Valuation:** $0.00 **Assigned To:**
Additional Info:
Is this a standalone Mechanical Permit?: Yes **New Construction:** No **Contractor PIN #:** 33164 **Building Permit #:** **Items Not Shown:** 0

Residential Ductwork Additions: No | **Number of Gas Accessory Units:** 0 | **Number of Gas Heating Unit w/ A/C Units:** 0 | **Number of Gas Logs/Fireplace Units:** 0 | **Number of Gas Pack Units:** 0
Number of Gas Piping/Pressure Test Units: 1 | **Number of Heat Pump Units:** 0 | **Number of Air Conditioning Units:** 0 | **Commercial Ductwork Additions:** No | **Number of Heating Units:** 0
Acres: 1.73058 | **Subdivision:** HOLIDAY LAKE
Description: Install gas line from tank to house

MECH-012792-2022 | **Type:** Mechanical | **District:** Lee County (Unincorporated) | **Main Address:** 6408 Reeves Dr
Status: Complete | **Workclass:** Residential | **Project:** | **Parcel:** 9539-95-3578-00 | Sanford, NC 27332
Application Date: 01/18/2022 | **Issue Date:** 01/18/2022 | **Expiration:** 01/28/2023 | **Last Inspection:** 01/28/2022 | **Finaled Date:** 01/28/2022
Zone: RR RR | **Sq Ft:** 0 | **Valuation:** $0.00 | **Assigned To:**
Additional Info:
Is this a standalone Mechanical Permit?: Yes | **New Construction:** No | **Contractor PIN #:** 18855/21474 | **Building Permit #:** | **Items Not Shown:** 0
Residential Ductwork Additions: No | **Number of Gas Accessory Units:** 0 | **Number of Gas Heating Unit w/ A/C Units:** 0 | **Number of Gas Logs/Fireplace Units:** 0 | **Number of Gas Pack Units:** 0
Number of Gas Piping/Pressure Test Units: 0 | **Number of Heat Pump Units:** 1 | **Number of Air Conditioning Units:** 0 | **Commercial Ductwork Additions:** No | **Number of Heating Units:** 0
Acres: 1.3843 | **Subdivision:** HIGH MEADOWS
Description: c/o & r/c 2 Ton HP & AH 5KW - Attic/Only

MECH-012793-2022 | **Type:** Mechanical | **District:** Lee County (Unincorporated) | **Main Address:** 220 Kensington Dr
Status: Issued | **Workclass:** Residential | **Project:** | **Parcel:** | Sanford, NC 27332
Application Date: 01/18/2022 | **Issue Date:** 01/18/2022 | **Expiration:** 01/31/2023 | **Last Inspection:** 01/31/2022 | **Finaled Date:**
Zone: | **Sq Ft:** 0 | **Valuation:** $0.00 | **Assigned To:**
Additional Info:
Is this a standalone Mechanical Permit?: No | **New Construction:** Yes | **Contractor PIN #:** 2680 | **Building Permit #:** BRES-012113-2021 | **Items Not Shown:** 0
Residential Ductwork Additions: No | **Number of Gas Accessory Units:** 0 | **Number of Gas Heating Unit w/ A/C Units:** 0 | **Number of Gas Logs/Fireplace Units:** 0 | **Number of Gas Pack Units:** 0
Number of Gas Piping/Pressure Test Units: 1 | **Number of Heat Pump Units:** 1 | **Number of Air Conditioning Units:** 0 | **Commercial Ductwork Additions:** No | **Number of Heating Units:** 0
Description: 3 ton heat pump with one gas drop

MECH-012797-2022 | **Type:** Mechanical | **District:** Sanford | **Main Address:** 516 Boulderbrook Pkwy
Status: Issued | **Workclass:** Residential | **Project:** | **Parcel:** | Sanford, NC 27330
Application Date: 01/18/2022 | **Issue Date:** 01/18/2022 | **Expiration:** 07/17/2022 | **Last Inspection:** | **Finaled Date:**
Zone: | **Sq Ft:** 0 | **Valuation:** $0.00 | **Assigned To:**
Additional Info:
Is this a standalone Mechanical Permit?: No | **New Construction:** Yes | **Contractor PIN #:** 24294 | **Building Permit #:** 9362 | **Items Not Shown:** 0
Residential Ductwork Additions: No | **Number of Gas Accessory Units:** 0 | **Number of Gas Heating Unit w/ A/C Units:** 0 | **Number of Gas Logs/Fireplace Units:** 1 | **Number of Gas Pack Units:** 0
Number of Gas Piping/Pressure Test Units: 0 | **Number of Heat Pump Units:** 0 | **Number of Air Conditioning Units:** 0 | **Commercial Ductwork Additions:** No | **Number of Heating Units:** 0
Description: PRE-FAB FIREPLACE

MECH-012798-2022 **Type:** Mechanical **District:** Sanford **Main Address:** 519 Boulderbrook Pkwy
Status: Issued **Workclass:** Residential **Project:** **Parcel:** Sanford, NC 27330
Application Date: 01/18/2022 **Issue Date:** 01/18/2022 **Expiration:** 07/17/2022 **Last Inspection:** **Finaled Date:**
Zone: **Sq Ft:** 0 **Valuation:** $0.00 **Assigned To:**
Additional Info:
Is this a standalone Mechanical Permit?: No **New Construction:** Yes **Contractor PIN #:** 24294 **Building Permit #:** 010586 **Items Not Shown:** 0
Residential Ductwork Additions: No **Number of Gas Accessory Units:** 0 **Number of Gas Heating Unit w/ A/C Units:** 0 **Number of Gas Logs/Fireplace Units:** 1 **Number of Gas Pack Units:** 0
Number of Gas Piping/Pressure Test Units: 0 **Number of Heat Pump Units:** 0 **Number of Air Conditioning Units:** 0 **Commercial Ductwork Additions:** No **Number of Heating Units:** 0
Description: PRE-FAB FIREPLACE

MECH-012800-2022 **Type:** Mechanical **District:** Sanford **Main Address:** 1206 Winterlocken Dr
Status: Complete **Workclass:** Residential **Project:** **Parcel:** 9632-51-3983-00 Sanford, NC 27330
Application Date: 01/18/2022 **Issue Date:** 01/18/2022 **Expiration:** 01/26/2023 **Last Inspection:** 01/26/2022 **Finaled Date:** 01/26/2022
Zone: R-20 R-20 **Sq Ft:** 0 **Valuation:** $0.00 **Assigned To:**
Additional Info:
Is this a standalone Mechanical Permit?: No **New Construction:** No **Residential Ductwork Additions:** No **Number of Heat Pump Units:** 1 **Commercial Ductwork Additions:** No
Acres: 0.494412 **Power Co.:** DUKE **Subdivision:** WEST LANDING
Description: 2 TON HEATPUMP CHANGEOUT

MECH-012804-2022 **Type:** Mechanical **District:** Lee County (Unincorporated) **Main Address:** 208 Kensington Dr
Status: Issued **Workclass:** Residential **Project:** **Parcel:** Sanford, NC 27330
Application Date: 01/18/2022 **Issue Date:** 01/18/2022 **Expiration:** 07/17/2022 **Last Inspection:** **Finaled Date:**
Zone: **Sq Ft:** 0 **Valuation:** $0.00 **Assigned To:**
Additional Info:
Is this a standalone Mechanical Permit?: No **New Construction:** No **Contractor PIN #:** 24294 **Building Permit #:** 011559 **Items Not Shown:** 0
Residential Ductwork Additions: No **Number of Gas Accessory Units:** 0 **Number of Gas Heating Unit w/ A/C Units:** 0 **Number of Gas Logs/Fireplace Units:** 1 **Number of Gas Pack Units:** 0
Number of Gas Piping/Pressure Test Units: 0 **Number of Heat Pump Units:** 0 **Number of Air Conditioning Units:** 0 **Commercial Ductwork Additions:** No **Number of Heating Units:** 0
Description: PRE-FAB FIREPLACE

MECH-012806-2022 **Type:** Mechanical **District:** Sanford **Main Address:** 105 Roundrock Ln
Status: Issued **Workclass:** Residential **Project:** **Parcel:** Sanford, NC 27330
Application Date: 01/18/2022 **Issue Date:** 01/19/2022 **Expiration:** 07/18/2022 **Last Inspection:** **Finaled Date:**
Zone: **Sq Ft:** 0 **Valuation:** $0.00 **Assigned To:**
Additional Info:
Is this a standalone Mechanical Permit?: Yes **New Construction:** Yes **Contractor PIN #:** 29077 **Building Permit #:** **Items Not Shown:** 0
Residential Ductwork Additions: No **Number of Gas Accessory Units:** 0 **Number of Gas Heating Unit w/ A/C Units:** 0 **Number of Gas Logs/Fireplace Units:** 0 **Number of Gas Pack Units:** 0
Number of Gas Piping/Pressure Test Units: 3 **Number of Heat Pump Units:** 2 **Number of Air Conditioning Units:** 0 **Commercial Ductwork Additions:** No **Number of Heating Units:** 0
Description: Installing 2 2.5 split heat pumps and gas lines for range, water heater, and fireplace.

MECH-012809-2022 | **Type:** Mechanical | **District:** Sanford ETJ | **Main Address:** 3128 Harward Dr
Status: Issued | **Workclass:** Residential | **Project:** | **Parcel:** 9651-05-2825-00 | Sanford, NC 27332
Application Date: 01/18/2022 | **Issue Date:** 01/25/2022 | **Expiration:** 07/24/2022 | **Last Inspection:** | **Finaled Date:**
Zone: R-20 R-20 | **Sq Ft:** 0 | **Valuation:** $0.00 | **Assigned To:**
Additional Info:
Is this a standalone Mechanical Permit?: No | **New Construction:** No | **Contractor PIN #:** 20688 | **Building Permit #:** | **Items Not Shown:** 0
Residential Ductwork Additions: No | **Number of Gas Accessory Units:** 0 | **Number of Gas Heating Unit w/ A/C Units:** 0 | **Number of Gas Logs/Fireplace Units:** 0 | **Number of Gas Pack Units:** 1
Number of Gas Piping/Pressure Test Units: 0 | **Number of Heat Pump Units:** 0 | **Number of Air Conditioning Units:** 0 | **Commercial Ductwork Additions:** No | **Number of Heating Units:** 0
Acres: 0.474509 | **Subdivision:** RIDGEVIEW
Description: Change out of a 2.5-ton gas pack. Reconnecting on the gas, Reconnecting on the electrical. The electrical box is in the Laundry Room. Replacing ductwork in the crawl space

---

MECH-012815-2022 | **Type:** Mechanical | **District:** Lee County (Unincorporated) | **Main Address:** 735 Greenwood Rd
Status: Issued | **Workclass:** Residential | **Project:** | **Parcel:** 9549-45-1267-00 | Sanford, NC 27332
Application Date: 01/18/2022 | **Issue Date:** 01/18/2022 | **Expiration:** 07/17/2022 | **Last Inspection:** | **Finaled Date:**
Zone: RR RR | **Sq Ft:** 0 | **Valuation:** $0.00 | **Assigned To:**
Additional Info:
Is this a standalone Mechanical Permit?: Yes | **New Construction:** No | **Residential Ductwork Additions:** No | **Number of Heat Pump Units:** 1 | **Commercial Ductwork Additions:** No
Acres: 0.698101 | **Power Co.:** DUKE | **Subdivision:**
Description: HP

MECH-012820-2022 | **Type:** Mechanical | **District:** Sanford | **Main Address:** 1811 Phillips Dr
Status: Issued | **Workclass:** Residential | **Project:** | **Parcel:** 9631-48-6999-00 | Sanford, NC 27330
Application Date: 01/18/2022 | **Issue Date:** 01/18/2022 | **Expiration:** 07/17/2022 | **Last Inspection:** | **Finaled Date:**
Zone: R-20 R-20 | **Sq Ft:** 800 | **Valuation:** $30,000.00 | **Assigned To:**
Additional Info:
Is this a standalone Mechanical Permit?: No | **New Construction:** No | **Residential Ductwork Additions:** No | **Number of Heat Pump Units:** 1 | **Commercial Ductwork Additions:** No
Acres: 0.452154 | **Power Co.:** DUKE | **Subdivision:** OWL'S NEST
Description: 20' X 40' ACCESSORY BUILDING

MECH-012822-2022 | **Type:** Mechanical | **District:** Lee County (Unincorporated) | **Main Address:** 2762 Steel Bridge
Status: Complete | **Workclass:** Residential | **Project:** | **Parcel:** 9612-82-2358-00 | Sanford, NC 27330
Application Date: 01/19/2022 | **Issue Date:** 01/24/2022 | **Expiration:** 01/27/2023 | **Last Inspection:** 01/27/2022 | **Finaled Date:** 01/27/2022
Zone: RA RA Residential Agricultural | **Sq Ft:** 0 | **Valuation:** $0.00 | **Assigned To:**
Additional Info:
Is this a standalone Mechanical Permit?: No | **New Construction:** No | **Contractor PIN #:** 18855/21474 | **Building Permit #:** | **Items Not Shown:** 0
Number of Changeout Units: 0 | **Residential Ductwork Additions:** No | **Number of Gas Accessory Units:** 0 | **Number of Gas Heating Unit w/ A/C Units:** 0 | **Number of Gas Logs/Fireplace Units:** 0
Number of Gas Pack Units: 0 | **Number of Gas Piping/Pressure Test Units:** 1 | **Number of Heat Pump Units:** 0 | **Number of Air Conditioning Units:** 0 | **Commercial Ductwork Additions:** No
Number of Heating Units: 0 | **Acres:** 1.99507 | **Subdivision:**
Description: install 20 KW Generator with 200 Amp Transfer Switch - Gas Piping & Power Disconnection

---

MECH-012831-2022 **Type:** Mechanical **District:** Lee County (Unincorporated) **Main Address:** 3931 Nicholson Rd
Status: Issued **Workclass:** Residential **Project:** **Parcel:** 9537-54-5316-00 Cameron, NC 28326
Application Date: 01/19/2022 **Issue Date:** 01/24/2022 **Expiration:** 01/25/2023 **Last Inspection:** 01/25/2022 **Finaled Date:**
Zone: RA RA Residential Agricultural **Sq Ft:** 0 **Valuation:** $0.00 **Assigned To:**
Additional Info:
Is this a standalone Mechanical Permit?: Yes **New Construction:** No **Contractor PIN #:** 33164 **Building Permit #:** **Items Not Shown:** 0
Residential Ductwork Additions: No **Number of Gas Accessory Units:** 0 **Number of Gas Heating Unit w/ A/C Units:** 0 **Number of Gas Logs/Fireplace Units:** 0 **Number of Gas Pack Units:** 0
Number of Gas Piping/Pressure Test Units: 1 **Number of Heat Pump Units:** 0 **Number of Air Conditioning Units:** 0 **Commercial Ductwork Additions:** No **Number of Heating Units:** 0
Watershed: LITTLE RIVER / LEE COUNTY **Acres:** 5.72 **Subdivision:**
Description: install gas line

MECH-012832-2022 **Type:** Mechanical **District:** Lee County (Unincorporated) **Main Address:** 8049 Sheriff Watson Rd
Status: Issued **Workclass:** Residential **Project:** **Parcel:** 9547-65-1210-00 Sanford, NC 27332
Application Date: 01/19/2022 **Issue Date:** 01/19/2022 **Expiration:** 07/18/2022 **Last Inspection:** **Finaled Date:**
Zone: RA/MH RA/MH **Sq Ft:** 0 **Valuation:** $0.00 **Assigned To:**
Additional Info:
Is this a standalone Mechanical Permit?: No **New Construction:** No **Building Permit #:** 012379 **Residential Ductwork Additions:** No **Number of Heat Pump Units:** 1
Commercial Ductwork Additions: No **Acres:** 1.87342 **Power Co.:** CEMC **Subdivision:** HUNTERS RIDGE
Description: HEATPUMP INSTALL FOR PROPOSED 14'X76' SINGLE-WIDE SET UP

MECH-012834-2022 **Type:** Mechanical **District:** Sanford **Main Address:** 512 Boulderbrook Parkway
Status: Issued **Workclass:** Residential **Project:** **Parcel:** Sanford, NC 27330
Application Date: 01/20/2022 **Issue Date:** 01/28/2022 **Expiration:** 07/27/2022 **Last Inspection:** **Finaled Date:**
Zone: **Sq Ft:** 0 **Valuation:** $0.00 **Assigned To:**
Additional Info:
Is this a standalone Mechanical Permit?: No **New Construction:** No **Contractor PIN #:** 24294 **Building Permit #:** BRES-009359-2021 **Items Not Shown:** 0
Residential Ductwork Additions: No **Number of Gas Accessory Units:** 0 **Number of Gas Heating Unit w/ A/C Units:** 0 **Number of Gas Logs/Fireplace Units:** 1 **Number of Gas Pack Units:** 0
Number of Gas Piping/Pressure Test Units: 0 **Number of Heat Pump Units:** 0 **Number of Air Conditioning Units:** 0 **Commercial Ductwork Additions:** No **Number of Heating Units:** 0
Description: PRE-FAB FIREPLACE

MECH-012836-2022 **Type:** Mechanical **District:** Sanford ETJ **Main Address:** 1018 Clearwater
Status: Issued **Workclass:** Residential **Project:** **Parcel:** 9652-79-0220-00 Sanford, NC 27330
Application Date: 01/20/2022 **Issue Date:** 01/20/2022 **Expiration:** 07/19/2022 **Last Inspection:** **Finaled Date:**
Zone: R-20 R-20 **Sq Ft:** 0 **Valuation:** $0.00 **Assigned To:**
Additional Info:
Is this a standalone Mechanical Permit?: No **New Construction:** No **Contractor PIN #:** 18855/21474 **Building Permit #:** **Items Not Shown:** 0
Residential Ductwork Additions: No **Number of Gas Accessory Units:** 0 **Number of Gas Heating Unit w/ A/C Units:** 0 **Number of Gas Logs/Fireplace Units:** 0 **Number of Gas Pack Units:** 0
Number of Gas Piping/Pressure Test Units: 0 **Number of Heat Pump Units:** 1 **Number of Air Conditioning Units:** 0 **Commercial Ductwork Additions:** No **Number of Heating Units:** 0

Watershed: CAPE FEAR / LEE COUNTY **Acres:** 0.663177 **Subdivision:** CLEARWATER FOREST
Description: c/o & r/c 5 Ton HP & AH Closet/Whole Home

MECH-012842-2022 **Type:** Mechanical **District:** Sanford **Main Address:** 528 Boulderbrook Parkway
Status: Issued **Workclass:** Residential **Project:** **Parcel:** Sanford 27330
Application Date: 01/20/2022 **Issue Date:** 01/24/2022 **Expiration:** 07/23/2022 **Last Inspection:** **Finaled Date:**
Zone: **Sq Ft:** 0 **Valuation:** $0.00 **Assigned To:**
Additional Info:
Is this a standalone Mechanical Permit?: No **New Construction:** Yes **Contractor PIN #:** 29077 **Building Permit #:** BRES-009364-2021 **Items Not Shown:** 0
Residential Ductwork Additions: No **Number of Gas Accessory Units:** 0 **Number of Gas Heating Unit w/ A/C Units:** 0 **Number of Gas Logs/Fireplace Units:** 0 **Number of Gas Pack Units:** 0
Number of Gas Piping/Pressure Test Units: 3 **Number of Heat Pump Units:** 2 **Number of Air Conditioning Units:** 0 **Commercial Ductwork Additions:** No **Number of Heating Units:** 0
Description: Installing 2 2.5 split heat pumps and gas lines for fireplace, range, and water heater.

MECH-012843-2022 **Type:** Mechanical **District:** Sanford **Main Address:** 519 Boulderbrook Parkway
Status: Issued **Workclass:** Residential **Project:** **Parcel:** Sanford 27330
Application Date: 01/20/2022 **Issue Date:** 01/24/2022 **Expiration:** 07/23/2022 **Last Inspection:** **Finaled Date:**
Zone: **Sq Ft:** 0 **Valuation:** $0.00 **Assigned To:**
Additional Info:
Is this a standalone Mechanical Permit?: Yes **New Construction:** Yes **Contractor PIN #:** 29077 **Building Permit #:** BRES-010586-2021 **Items Not Shown:** 0
Residential Ductwork Additions: No **Number of Gas Accessory Units:** 0 **Number of Gas Heating Unit w/ A/C Units:** 0 **Number of Gas Logs/Fireplace Units:** 0 **Number of Gas Pack Units:** 0
Number of Gas Piping/Pressure Test Units: 3 **Number of Heat Pump Units:** 2 **Number of Air Conditioning Units:** 0 **Commercial Ductwork Additions:** No **Number of Heating Units:** 0
Description: Installing 2 2.5 split heat pumps and gas lines for fireplace, range, & water heater.

MECH-012844-2022 **Type:** Mechanical **District:** Sanford **Main Address:** 516 Boulderbrook Parkway
Status: Issued **Workclass:** Residential **Project:** **Parcel:** Sanford 27330
Application Date: 01/20/2022 **Issue Date:** 01/24/2022 **Expiration:** 07/23/2022 **Last Inspection:** **Finaled Date:**
Zone: **Sq Ft:** 0 **Valuation:** $0.00 **Assigned To:**
Additional Info:
Is this a standalone Mechanical Permit?: Yes **New Construction:** Yes **Contractor PIN #:** 29077 **Building Permit #:** BRES-009362-2021 **Items Not Shown:** 0
Residential Ductwork Additions: No **Number of Gas Accessory Units:** 0 **Number of Gas Heating Unit w/ A/C Units:** 0 **Number of Gas Logs/Fireplace Units:** 0 **Number of Gas Pack Units:** 0
Number of Gas Piping/Pressure Test Units: 3 **Number of Heat Pump Units:** 2 **Number of Air Conditioning Units:** 0 **Commercial Ductwork Additions:** No **Number of Heating Units:** 0
Description: Installing 2 2.5 split heat pumps and gas lines for fireplace, range, and water heater.

MECH-012845-2022 **Type:** Mechanical **District:** Lee County (Unincorporated) **Main Address:** 7704 Villanow Dr
Status: Issued **Workclass:** Residential **Project:** **Parcel:** 9519-97-0455-00 Sanford, NC 27332
Application Date: 01/20/2022 **Issue Date:** 01/24/2022 **Expiration:** 01/25/2023 **Last Inspection:** 01/25/2022 **Finaled Date:**
Zone: RR RR **Sq Ft:** 0 **Valuation:** $0.00 **Assigned To:**
Additional Info:

Is this a standalone Mechanical Permit?: Yes | **New Construction:** No | **Contractor PIN #:** 33164 | **Building Permit #:** | **Items Not Shown:** 0
Residential Ductwork Additions: No | **Number of Gas Accessory Units:** 1 | **Number of Gas Heating Unit w/ A/C Units:** 0 | **Number of Gas Logs/Fireplace Units:** 1 | **Number of Gas Pack Units:** 0
Number of Gas Piping/Pressure Test Units: 1 | **Number of Heat Pump Units:** 0 | **Number of Air Conditioning Units:** 0 | **Commercial Ductwork Additions:** No | **Number of Heating Units:** 0
Acres: 1.95 | **Subdivision:** LAKE VILLANOW II
Description: install gas water heater and gas range, install gas lines to each

---

MECH-012848-2022 | **Type:** Mechanical | **District:** Lee County (Unincorporated) | **Main Address:** 6777 Old Jefferson Davis
Status: Issued | **Workclass:** Residential | **Project:** | **Parcel:** 9528-91-9603-00 | Cameron, NC 28326
Application Date: 01/20/2022 | **Issue Date:** 01/27/2022 | **Expiration:** 07/26/2022 | **Last Inspection:** | **Finaled Date:**
Zone: RA/MH RA/MH | **Sq Ft:** 0 | **Valuation:** $0.00 | **Assigned To:**
Additional Info:
Is this a standalone Mechanical Permit?: No | **New Construction:** Yes | **Contractor PIN #:** 28846 | **Building Permit #:** 11608 | **Items Not Shown:** 0
Residential Ductwork Additions: No | **Number of Gas Accessory Units:** 0 | **Number of Gas Heating Unit w/ A/C Units:** 0 | **Number of Gas Logs/Fireplace Units:** 0 | **Number of Gas Pack Units:** 0
Number of Gas Piping/Pressure Test Units: 0 | **Number of Heat Pump Units:** 1 | **Number of Air Conditioning Units:** 0 | **Commercial Ductwork Additions:** No | **Number of Heating Units:** 0
Watershed: LITTLE RIVER / LEE COUNTY | **Acres:** 1.28817 | **Subdivision:** SOUTH LEE ESTATES
Description: Install Goodman 3 Ton SHP
10KW Heat Strips
3x50 CFM BFEs
All New Ductwork

MECH-012854-2022 | **Type:** Mechanical | **District:** Lee County (Unincorporated) | **Main Address:** 7410 Chickadee Ct
Status: Issued | **Workclass:** Residential | **Project:** | **Parcel:** 9529-95-5049-00 | Sanford, NC 27332
Application Date: 01/21/2022 | **Issue Date:** 01/25/2022 | **Expiration:** 01/26/2023 | **Last Inspection:** 01/26/2022 | **Finaled Date:**
Zone: RR RR | **Sq Ft:** 0 | **Valuation:** $0.00 | **Assigned To:**
Additional Info:
Is this a standalone Mechanical Permit?: Yes | **New Construction:** No | **Contractor PIN #:** 33164 | **Building Permit #:** | **Items Not Shown:** 0
Residential Ductwork Additions: No | **Number of Gas Accessory Units:** 0 | **Number of Gas Heating Unit w/ A/C Units:** 0 | **Number of Gas Logs/Fireplace Units:** 1 | **Number of Gas Pack Units:** 0
Number of Gas Piping/Pressure Test Units: 1 | **Number of Heat Pump Units:** 0 | **Number of Air Conditioning Units:** 0 | **Commercial Ductwork Additions:** No | **Number of Heating Units:** 0
Watershed: LITTLE RIVER / LEE COUNTY | **Acres:** 0.553426 | **Subdivision:** QUAIL RIDGE
Description: install gas logs, install gas line from tanks to logs

---

MECH-012856-2022 | **Type:** Mechanical | **District:** Lee County (Unincorporated) | **Main Address:** 314 Hancock Crossing
Status: Issued | **Workclass:** Residential | **Project:** | **Parcel:** 9538-68-4779-00 | Sanford, NC 27332
Application Date: 01/24/2022 | **Issue Date:** 01/25/2022 | **Expiration:** 07/24/2022 | **Last Inspection:** | **Finaled Date:**
Zone: RA RA Residential Agricultural | **Sq Ft:** 0 | **Valuation:** $0.00 | **Assigned To:**
Additional Info:
Is this a standalone Mechanical Permit?: No | **New Construction:** No | **Contractor PIN #:** 13341 | **Building Permit #:** BRES-012221-2021 | **Items Not Shown:** 0
Residential Ductwork Additions: No | **Number of Gas Accessory Units:** 0 | **Number of Gas Heating Unit w/ A/C Units:** 0 | **Number of Gas Logs/Fireplace Units:** 0 | **Number of Gas Pack Units:** 0

Number of Gas Piping/Pressure Test Units: 0 | **Number of Heat Pump Units:** 1 | **Number of Air Conditioning Units:** 0 | **Commercial Ductwork Additions:** No | **Number of Heating Units:** 0
Acres: 2.00254 | **Subdivision:**
Description: Install HVAC equipment

MECH-012857-2022 | **Type:** Mechanical | **District:** Sanford | **Main Address:** 1721 Owls Nest Rd
Status: Issued | **Workclass:** Residential | **Project:** | **Parcel:** 9632-31-5570-00 | Sanford, NC 27330
Application Date: 01/24/2022 | **Issue Date:** 01/24/2022 | **Expiration:** 07/23/2022 | **Last Inspection:** | **Finaled Date:**
Zone: R-20 R-20 | **Sq Ft:** 0 | **Valuation:** $0.00 | **Assigned To:**
Additional Info:
Is this a standalone Mechanical Permit?: No | **New Construction:** No | **Residential Ductwork Additions:** No | **Number of Heat Pump Units:** 1 | **Commercial Ductwork Additions:** No
Acres: 0.554995 | **Power Co.:** DUKE | **Subdivision:** OWL'S NEST
Description: 3 TON HEAT PUMP CHANGEOUT

MECH-012858-2022 | **Type:** Mechanical | **District:** Lee County (Unincorporated) | **Main Address:** 3108 Chipping Wedge
Status: Issued | **Workclass:** Residential | **Project:** | **Parcel:** 9660-98-7125-00 | Sanford, NC 27332
Application Date: 01/24/2022 | **Issue Date:** 01/24/2022 | **Expiration:** 07/23/2022 | **Last Inspection:** | **Finaled Date:**
Zone: RR RR | **Sq Ft:** 0 | **Valuation:** $0.00 | **Assigned To:**
Additional Info:
Is this a standalone Mechanical Permit?: No | **New Construction:** No | **Residential Ductwork Additions:** No | **Number of Heat Pump Units:** 1 | **Commercial Ductwork Additions:** No
Acres: 0.654075 | **Power Co.:** DUKE | **Subdivision:** CAROLINA TRACE
Description: 3.5 TON HEAT PUMP CHANGEOUT

MECH-012863-2022 | **Type:** Mechanical | **District:** Lee County (Unincorporated) | **Main Address:** 5184 Carbonton Rd
Status: Issued | **Workclass:** Residential | **Project:** | **Parcel:** 9613-48-7818-00 | Sanford, NC 27330
Application Date: 01/24/2022 | **Issue Date:** 01/24/2022 | **Expiration:** 07/23/2022 | **Last Inspection:** | **Finaled Date:**
Zone: RA RA Residential Agricultural | **Sq Ft:** 0 | **Valuation:** $0.00 | **Assigned To:**
Additional Info:
Is this a standalone Mechanical Permit?: Yes | **New Construction:** No | **Contractor PIN #:** 28280 | **Building Permit #:** | **Items Not Shown:** 0
Residential Ductwork Additions: No | **Number of Gas Accessory Units:** 0 | **Number of Gas Heating Unit w/ A/C Units:** 0 | **Number of Gas Logs/Fireplace Units:** 0 | **Number of Gas Pack Units:** 0
Number of Gas Piping/Pressure Test Units: 0 | **Number of Heat Pump Units:** 1 | **Number of Air Conditioning Units:** 0 | **Commercial Ductwork Additions:** No | **Number of Heating Units:** 0
Watershed: DEEP RIVER / LEE COUNTY | **Acres:** 9.54124 | **Subdivision:**
Description: Heat pump split system 3.5 ton - Crawl

MECH-012864-2022 | **Type:** Mechanical | **District:** Sanford | **Main Address:** 603 Bragg St
Status: Issued | **Workclass:** Non-Residential | **Project:** | **Parcel:** 9653-20-8053-00 | Sanford, NC 27330
Application Date: 01/24/2022 | **Issue Date:** 01/25/2022 | **Expiration:** 07/24/2022 | **Last Inspection:** | **Finaled Date:**
Zone: C-2 C-2 General Commercial | **Sq Ft:** 0 | **Valuation:** $0.00 | **Assigned To:**
Additional Info:
Is this a standalone Mechanical Permit?: No | **New Construction:** No | **Contractor PIN #:** 28280 | **Building Permit #:** BLDC-012008-2021 | **Boiler Tons:** 0
Chiller Tons: 0 | **Gas Pack Tons:** 0 | **Residential Ductwork Additions:** No | **Heat Pump Tons:** 0 | **Refrigeration Tons:** 0

Gas Appliance BTUs: 0 **Gas Heating Unit BTUs:** 0 **Gas Heating Units w/ A/C Unit BTUs:** 27000 **Gas Piping/Pressure Test Units:** 0 **Commercial Ductwork Additions:** No
Canopy Hood Units: 0 **Acres:** 1.03459 **Subdivision:**
Description: Ductless Mini Split - 27K BTUH

MECH-012866-2022 **Type:** Mechanical **District:** Sanford **Main Address:** 1322 Fernridge Dr
Status: Issued **Workclass:** Residential **Project:** **Parcel:** 9650-79-7951-00 Sanford, NC 27332
Application Date: 01/24/2022 **Issue Date:** 01/24/2022 **Expiration:** 07/23/2022 **Last Inspection:** **Finaled Date:**
Zone: R-10 R-10 Residential Mixed **Sq Ft:** 0 **Valuation:** $0.00 **Assigned To:**
Additional Info:
Is this a standalone Mechanical Permit?: Yes **New Construction:** No **Contractor PIN #:** 28280 **Building Permit #:** **Items Not Shown:** 0
Residential Ductwork Additions: No **Number of Gas Accessory Units:** 0 **Number of Gas Heating Unit w/ A/C Units:** 0 **Number of Gas Logs/Fireplace Units:** 0 **Number of Gas Pack Units:** 0
Number of Gas Piping/Pressure Test Units: 0 **Number of Heat Pump Units:** 1 **Number of Air Conditioning Units:** 0 **Commercial Ductwork Additions:** No **Number of Heating Units:** 0
Acres: 0.362293 **Subdivision:** WOODBRIDGE FOREST
Description: HVAC Changeout - 2.0 ton / Crawl and full duct system replacement

---

MECH-012869-2022 **Type:** Mechanical **District:** Sanford ETJ **Main Address:** 4116 Hunt Springs
Status: Issued **Workclass:** Residential **Project:** **Parcel:** 9651-11-7446-00 Sanford, NC 27332
Application Date: 01/24/2022 **Issue Date:** 01/25/2022 **Expiration:** 07/24/2022 **Last Inspection:** **Finaled Date:**
Zone: R-20 R-20 **Sq Ft:** 0 **Valuation:** $0.00 **Assigned To:**
Additional Info:
Is this a standalone Mechanical Permit?: Yes **New Construction:** No **Contractor PIN #:** 29147 **Building Permit #:** **Items Not Shown:** 0
Residential Ductwork Additions: No **Number of Gas Accessory Units:** 0 **Number of Gas Heating Unit w/ A/C Units:** 0 **Number of Gas Logs/Fireplace Units:** 0 **Number of Gas Pack Units:** 0
Number of Gas Piping/Pressure Test Units: 0 **Number of Heat Pump Units:** 1 **Number of Air Conditioning Units:** 0 **Commercial Ductwork Additions:** No **Number of Heating Units:** 0
Acres: 0.564251 **Subdivision:** ST ANDREWS
Description: REPLACING WHOLE HOUSE HEAT PUMP PACK OUTSIDE

MECH-012871-2022 **Type:** Mechanical **District:** Sanford **Main Address:** 716 Mcleod
Status: Issued **Workclass:** Residential **Project:** **Parcel:** 9632-88-5376-00 Sanford, NC 27330
Application Date: 01/24/2022 **Issue Date:** 01/25/2022 **Expiration:** 07/24/2022 **Last Inspection:** **Finaled Date:**
Zone: R-20 R-20 **Sq Ft:** 0 **Valuation:** $0.00 **Assigned To:**
Additional Info:
Is this a standalone Mechanical Permit?: Yes **New Construction:** No **Contractor PIN #:** 29147 **Building Permit #:** **Items Not Shown:** 0
Residential Ductwork Additions: No **Number of Gas Accessory Units:** 0 **Number of Gas Heating Unit w/ A/C Units:** 1 **Number of Gas Logs/Fireplace Units:** 0 **Number of Gas Pack Units:** 0
Number of Gas Piping/Pressure Test Units: 0 **Number of Heat Pump Units:** 0 **Number of Air Conditioning Units:** 0 **Commercial Ductwork Additions:** No **Number of Heating Units:** 0
Acres: 1.90012 **Subdivision:** COLONIAL ACRES
Description: REPLACING UPPER & LOWER SPLIT GAS/AC SYSTEM IN ATTIC & CRAWLSPACE

MECH-012872-2022 **Type:** Mechanical **District:** Lee County (Unincorporated) **Main Address:** 617 Prospectors
Status: Issued **Workclass:** Residential **Project:** **Parcel:** 9666-26-4013-00 Sanford, NC 27330
Application Date: 01/24/2022 **Issue Date:** 01/25/2022 **Expiration:** 07/24/2022 **Last Inspection:** **Finaled Date:**
Zone: RA RA Residential Agricultural **Sq Ft:** 0 **Valuation:** $0.00 **Assigned To:**
Additional Info:
Is this a standalone Mechanical Permit?: Yes **New Construction:** No **Contractor PIN #:** 29147 **Building Permit #:** **Items Not Shown:** 0
Residential Ductwork Additions: No **Number of Gas Accessory Units:** 0 **Number of Gas Heating Unit w/ A/C Units:** 0 **Number of Gas Logs/Fireplace Units:** 0 **Number of Gas Pack Units:** 0
Number of Gas Piping/Pressure Test Units: 0 **Number of Heat Pump Units:** 1 **Number of Air Conditioning Units:** 0 **Commercial Ductwork Additions:** No **Number of Heating Units:** 0
Watershed: CAPE FEAR / LEE COUNTY **Acres:** 1.09282 **Subdivision:** COPPER RIDGE
Description: REPLACING WHOLE HOUSE SPLIT HEAT PUMP SYSTEM IN ATTIC

MECH-012874-2022 **Type:** Mechanical **District:** Lee County (Unincorporated) **Main Address:** 128 Edgefield Dr
Status: Issued **Workclass:** Residential **Project:** **Parcel:** Sanford, NC 27332
Application Date: 01/25/2022 **Issue Date:** 01/25/2022 **Expiration:** 07/24/2022 **Last Inspection:** **Finaled Date:**
Zone: **Sq Ft:** 0 **Valuation:** $0.00 **Assigned To:**
Additional Info:
Is this a standalone Mechanical Permit?: No **New Construction:** No **Contractor PIN #:** 31005 **Building Permit #:** BRES-010622-2021 **Items Not Shown:** 0
Residential Ductwork Additions: No **Number of Gas Accessory Units:** 0 **Number of Gas Heating Unit w/ A/C Units:** 0 **Number of Gas Logs/Fireplace Units:** 0 **Number of Gas Pack Units:** 0
Number of Gas Piping/Pressure Test Units: 0 **Number of Heat Pump Units:** 1 **Number of Air Conditioning Units:** 0 **Commercial Ductwork Additions:** No **Number of Heating Units:** 0

MECH-012884-2022 **Type:** Mechanical **District:** Lee County (Unincorporated) **Main Address:** 4300 Oak Park Rd
Status: Issued **Workclass:** Non-Residential **Project:** **Parcel:** 9645-72-5175-00 Sanford, NC 27330
Application Date: 01/25/2022 **Issue Date:** 01/26/2022 **Expiration:** 07/25/2022 **Last Inspection:** **Finaled Date:**
Zone: LI LI Light Industrial **Sq Ft:** 0 **Valuation:** $0.00 **Assigned To:**
Additional Info:
Is this a standalone Mechanical Permit?: Yes **New Construction:** No **Contractor PIN #:** 08299 **Building Permit #:** **Boiler Tons:** 0
Chiller Tons: 0 **Gas Pack Tons:** 0 **Residential Ductwork Additions:** No **Heat Pump Tons:** 0 **Refrigeration Tons:** 0
Gas Appliance BTUs: 0 **Gas Heating Unit BTUs:** 0 **Gas Heating Units w/ A/C Unit BTUs:** 0 **Gas Piping/Pressure Test Units:** 0 **Commercial Ductwork Additions:** Yes
Canopy Hood Units: 0 **Acres:** 107.124 **Subdivision:**
Description: Replace AHU

MECH-012890-2022 **Type:** Mechanical **District:** Sanford **Main Address:** 501 Snow Cir
Status: Issued **Workclass:** Residential **Project:** **Parcel:** 9632-63-7116-00 Sanford, NC 27330
Application Date: 01/26/2022 **Issue Date:** 01/27/2022 **Expiration:** 07/26/2022 **Last Inspection:** **Finaled Date:**
Zone: R-20 R-20 **Sq Ft:** 0 **Valuation:** $0.00 **Assigned To:**
Additional Info:
Is this a standalone Mechanical Permit?: Yes **New Construction:** No **Contractor PIN #:** 29147 **Building Permit #:** **Items Not Shown:** 0
Residential Ductwork Additions: No **Number of Gas Accessory Units:** 0 **Number of Gas Heating Unit w/ A/C Units:** 1 **Number of Gas Logs/Fireplace Units:** 0 **Number of Gas Pack Units:** 0

Number of Gas Piping/Pressure Test Units: 0 | **Number of Heat Pump Units:** 0 | **Number of Air Conditioning Units:** 0 | **Commercial Ductwork Additions:** No | **Number of Heating Units:** 0
Acres: 0.341189 | **Subdivision:** WINTERLOCKEN FOREST
Description: REPLACING WHOLE HOUSE SPLIT GAS/AC SYSTEM IN ATTIC

MECH-012899-2022 | **Type:** Mechanical | **District:** Sanford | **Main Address:** 634 Sunset Dr
Status: Issued | **Workclass:** Residential | **Project:** | **Parcel:** 9642-39-1512-00 | Sanford, NC 27330
Application Date: 01/26/2022 | **Issue Date:** 01/26/2022 | **Expiration:** 07/25/2022 | **Last Inspection:** | **Finaled Date:**
Zone: R-20 R-20 | **Sq Ft:** 0 | **Valuation:** $0.00 | **Assigned To:**
Additional Info:
Is this a standalone Mechanical Permit?: No | **New Construction:** No | **Residential Ductwork Additions:** No | **Commercial Ductwork Additions:** No | **Number of Heating Units:** 1
Acres: 0.71208 | **Power Co.:** DUKE | **Subdivision:** MCIVER PARK
Description: 120k BTU GAS FURNACE

MECH-012908-2022 | **Type:** Mechanical | **District:** Lee County (Unincorporated) | **Main Address:** 607 Henley Rd
Status: Issued | **Workclass:** Residential | **Project:** | **Parcel:** 9621-94-0652-00 | Sanford, NC 27330
Application Date: 01/27/2022 | **Issue Date:** 01/27/2022 | **Expiration:** 07/26/2022 | **Last Inspection:** | **Finaled Date:**
Zone: RA RA Residential Agricultural | **Sq Ft:** 0 | **Valuation:** $0.00 | **Assigned To:**
Additional Info:
Is this a standalone Mechanical Permit?: Yes | **New Construction:** No | **Residential Ductwork Additions:** No | **Number of Air Conditioning Units:** 1 | **Commercial Ductwork Additions:** No
Acres: 47.9559 | **Power Co.:** DUKE | **Subdivision:**
Description: 2.5 TON CONDENSING UNIT SYSTEM W/ AH

MECH-012909-2022 | **Type:** Mechanical | **District:** Broadway | **Main Address:** 219 Beale Dr
Status: Issued | **Workclass:** Residential | **Project:** | **Parcel:** 9682-50-5159-00 | Broadway, NC 27505
Application Date: 01/27/2022 | **Issue Date:** 01/27/2022 | **Expiration:** 07/26/2022 | **Last Inspection:** | **Finaled Date:**
Zone: R-20 R-20 | **Sq Ft:** 3,946 | **Valuation:** $250,000.00 | **Assigned To:**
Additional Info:
Is this a standalone Mechanical Permit?: No | **New Construction:** No | **Residential Ductwork Additions:** No | **Number of Heat Pump Units:** 1 | **Commercial Ductwork Additions:** No
Acres: 0.791008 | **Power Co.:** DUKE | **Subdivision:** WATSON, E C
Description: NEW SFD

MECH-012910-2022 | **Type:** Mechanical | **District:** Sanford | **Main Address:** 512 Boulderbrook Parkway
Status: Issued | **Workclass:** Residential | **Project:** | **Parcel:** | Sanford 27330
Application Date: 01/27/2022 | **Issue Date:** 01/28/2022 | **Expiration:** 07/27/2022 | **Last Inspection:** | **Finaled Date:**
Zone: | **Sq Ft:** 0 | **Valuation:** $0.00 | **Assigned To:**
Additional Info:
Is this a standalone Mechanical Permit?: Yes | **New Construction:** Yes | **Contractor PIN #:** 29077 | **Building Permit #:** BRES-0009359-2021 | **Items Not Shown:** 0
Residential Ductwork Additions: No | **Number of Gas Accessory Units:** 0 | **Number of Gas Heating Unit w/ A/C Units:** 0 | **Number of Gas Logs/Fireplace Units:** 0 | **Number of Gas Pack Units:** 0
Number of Gas Piping/Pressure Test Units: 2 | **Number of Heat Pump Units:** 1 | **Number of Air Conditioning Units:** 0 | **Commercial Ductwork Additions:** No | **Number of Heating Units:** 0

Description: Installing a 3 Ton split heat pump and gas lines for range and fireplace

---

MECH-012916-2022 | **Type:** Mechanical | **District:** Lee County (Unincorporated) | **Main Address:** 3926 Carbonton Rd
Status: Issued | **Workclass:** Residential | **Project:** | **Parcel:** 9623-52-0377-00 | Sanford, NC 27330
Application Date: 01/27/2022 | **Issue Date:** 01/31/2022 | **Expiration:** 07/30/2022 | **Last Inspection:** | **Finaled Date:**
Zone: RR RR | **Sq Ft:** 0 | **Valuation:** $0.00 | **Assigned To:**
Additional Info:
Is this a standalone Mechanical Permit?: No | **New Construction:** Yes | **Contractor PIN #:** NA | **Building Permit #:** BRES-011867-2021 | **Items Not Shown:** 0
Residential Ductwork Additions: No | **Number of Gas Accessory Units:** 0 | **Number of Gas Heating Unit w/ A/C Units:** 0 | **Number of Gas Logs/Fireplace Units:** 1 | **Number of Gas Pack Units:** 0
Number of Gas Piping/Pressure Test Units: 0 | **Number of Heat Pump Units:** 0 | **Number of Air Conditioning Units:** 0 | **Commercial Ductwork Additions:** No | **Number of Heating Units:** 0
Watershed: DEEP RIVER / LEE COUNTY | **Acres:** 3.76 | **Power Co.:** CEMC | **Subdivision:**
Description: gas fireplace install

MECH-012924-2022 | **Type:** Mechanical | **District:** Lee County (Unincorporated) | **Main Address:** 246 Saintsbury Pl
Status: Issued | **Workclass:** Residential | **Project:** BOCA ESTATES | **Parcel:** 9519-78-1428-00 | Sanford, NC 27330
Application Date: 01/28/2022 | **Issue Date:** 01/28/2022 | **Expiration:** 07/27/2022 | **Last Inspection:** | **Finaled Date:**
Zone: RA RA Residential Agricultural | **Sq Ft:** 4,121 | **Valuation:** $478,000.00 | **Assigned To:**
Additional Info:
Is this a standalone Mechanical Permit?: No | **New Construction:** No | **Residential Ductwork Additions:** No | **Number of Heat Pump Units:** 2 | **Commercial Ductwork Additions:** No
Acres: 1.51654 | **Power Co.:** DUKE | **Subdivision:** BOCA ESTATES
Description: NEW SFD LOT -10

MECH-012930-2022 | **Type:** Mechanical | **District:** Lee County (Unincorporated) | **Main Address:** 22 Traceway North
Status: Issued | **Workclass:** Residential | **Project:** | **Parcel:** 9660-63-3534-00 | Sanford, NC 27332
Application Date: 01/31/2022 | **Issue Date:** 01/31/2022 | **Expiration:** 07/30/2022 | **Last Inspection:** | **Finaled Date:**
Zone: RR RR | **Sq Ft:** 0 | **Valuation:** $0.00 | **Assigned To:**
Additional Info:
Is this a standalone Mechanical Permit?: No | **New Construction:** No | **Residential Ductwork Additions:** No | **Number of Heat Pump Units:** 1 | **Commercial Ductwork Additions:** No
Acres: 0.672731 | **Power Co.:** DUKE | **Subdivision:** CAROLINA TRACE
Description: 4 TON HEATPUMP CHANGEOUT

MECH-012932-2022 | **Type:** Mechanical | **District:** Broadway | **Main Address:** 304 S Main St
Status: Issued | **Workclass:** Residential | **Project:** | **Parcel:** 9681-49-7818-00 | Broadway, NC 27505
Application Date: 01/31/2022 | **Issue Date:** 01/31/2022 | **Expiration:** 07/30/2022 | **Last Inspection:** | **Finaled Date:**
Zone: R-20 R-20 | **Sq Ft:** 0 | **Valuation:** $0.00 | **Assigned To:**
Additional Info:
Is this a standalone Mechanical Permit?: No | **New Construction:** No | **Residential Ductwork Additions:** No | **Number of Heat Pump Units:** 1 | **Commercial Ductwork Additions:** No
Acres: 0.812879 | **Power Co.:** DUKE | **Subdivision:**
Description: 3 TON HEATPUMP CHANGEOUT

MECH-012934-2022 **Type:** Mechanical **District:** Lee County (Unincorporated) **Main Address:**
Status: Void **Workclass:** Non-Residential **Project:** **Parcel:** 9644-57-4266-00
Application Date: 01/31/2022 **Issue Date:** 01/31/2022 **Expiration:** 07/30/2022 **Last Inspection:** **Finaled Date:** 01/31/2022
Zone: RR RR **Sq Ft:** 0 **Valuation:** $8,000.00 **Assigned To:**
Additional Info:
Is this a standalone Mechanical Permit?: No **New Construction:** No **Residential Ductwork Additions:** No **Heat Pump Tons:** 0 **Gas Heating Unit BTUs:** 120000
Commercial Ductwork Additions: No **Acres:** 2.66461 **Power Co.:** DUKE **Subdivision:**

MECH-012937-2022 **Type:** Mechanical **District:** Lee County (Unincorporated) **Main Address:** 104 Perkinson Rd
Status: Issued **Workclass:** Non-Residential **Project:** **Parcel:** 9644-57-4266-00 Sanford, NC 27330
Application Date: 01/31/2022 **Issue Date:** 01/31/2022 **Expiration:** 07/30/2022 **Last Inspection:** **Finaled Date:**
Zone: RA RA Residential Agricultural **Sq Ft:** 0 **Valuation:** $0.00 **Assigned To:**
Additional Info:
Is this a standalone Mechanical Permit?: No **New Construction:** No **Residential Ductwork Additions:** No **Gas Heating Unit BTUs:** 120000 **Commercial Ductwork Additions:** No
Acres: 2.66461 **Power Co.:** DUKE **Subdivision:**
Description: 120K BTU FURNACE

PERMITS ISSUED FOR MECHANICAL: 113

PLUMBING (NON-RESIDENTIAL)

PLMC-012579-2021 **Type:** Plumbing (Non-Residential) **District:** Sanford **Main Address:** 3310 Nc 87 Hwy
Status: Issued **Workclass:** Other **Project:** **Parcel:** 9661-16-2164-00 Sanford, NC 27332
Application Date: 12/27/2021 **Issue Date:** 01/19/2022 **Expiration:** 07/18/2022 **Last Inspection:** **Finaled Date:**
Zone: CZ CZ **Sq Ft:** 0 **Valuation:** $0.00 **Assigned To:**
Additional Info:
Contractor PIN #: 29877 **Number of Bathtubs:** 0 **Number of Lanundry Tubs:** 0 **Number of Spa Tubs:** 0 **Number of Showers:** 0
Number of Lavatories: 12 **Number of Water Closets:** 17 **Number of Urinals:** 6 **Number of Catch Basins:** 0 **Number of Dental Chairs:** 0
Number of Sewer Lines: 0 **Number of Water Fountains:** 2 **Number of Water Lines:** 0 **Number of Water Heaters - Gas:** 0 **Number of Water Heaters - Electric:** 0
Number of Water Softners: 0 **Number of Kitchen Sinks:** 0 **Number of Can Wash Sinks:** 0 **Number of Water Tanks:** 0 **Number of Feed Water Treatments:** 0
Number of Other Sinks: 0 **Number of Bidets:** 0 **Number of Washing Machines:** 0 **Number of Interceptors:** 0 **Number of Dishwashers:** 0
Number of Roof Leaders: 0 **Number of Garbage Disposals:** 0 **Number of Gas Pipings:** 0 **Other:** 0 **Number of Floor Drains:** 9
Reactivated: No **Plumber to Install Water & Sewer:** No **Standalone Plumbing Permit:** No **Subdivision:** **Acres:** 25.2232
Description: Interior Remodel of existing restrooms. Remove & reinstall exiting fixtures.
** BUILDING PERMIT HAS NOT BEEN ISSUED AS OF YET. ALSO MUST ATTACH COMPLETED PLUMBING PERMIT PDF APPLICATION TO CSS PORTAL**

PLMC-012780-2022 **Type:** Plumbing (Non-Residential) **District:** Sanford **Main Address:** 603 Bragg St
Status: Issued **Workclass:** Other **Project:** **Parcel:** 9653-20-8053-00 Sanford, NC 27330
Application Date: 01/14/2022 **Issue Date:** 01/14/2022 **Expiration:** 01/25/2023 **Last Inspection:** 01/25/2022 **Finaled Date:**
Zone: C-2 C-2 General Commercial **Sq Ft:** 0 **Valuation:** $0.00 **Assigned To:**
Additional Info:
Number of Lavatories: 1 **Number of Water Closets:** 2 **Number of Kitchen Sinks:** 1 **Reactivated:** No **Building Permit #:** 012008
Plumber to Install Water & Sewer: No **Standalone Plumbing Permit:** No **Subdivision:** **Acres:** 1.03459 **Power Co.:** DUKE

Description: PROPOSED 4 FIXTURES (1 KITCHEN SINK, 1 LAV, 2 WATER CLOSETS) INSTALL FOR PROPOSED INTERIOR RENOVATION TO CONVERT BUILDING INTO ROOFING BUSINESS OFFICE SPACE (FLOORING, DRYWALL, PAINTING, CEILING REPAIR, PLUMBING AND ELECTRICAL MINOR REPAIRS)

PLMC-012787-2022 | **Type:** Plumbing (Non-Residential) | **District:** Sanford | **Main Address:** 3216 Nc 87 Hwy
Status: Complete | **Workclass:** Other | **Project:** | **Parcel:** 9661-07-8227-00 | Sanford, NC 27332
Application Date: 01/14/2022 | **Issue Date:** 01/18/2022 | **Expiration:** 01/26/2023 | **Last Inspection:** 01/26/2022 | **Finaled Date:** 01/26/2022
Zone: CZ CZ | **Sq Ft:** 0 | **Valuation:** $0.00 | **Assigned To:**
Additional Info:
Contractor PIN #: P24095 | **Number of Bathtubs:** 0 | **Number of Lanundry Tubs:** 0 | **Number of Spa Tubs:** 0 | **Number of Showers:** 0
Number of Lavatories: 0 | **Number of Water Closets:** 0 | **Number of Urinals:** 0 | **Number of Catch Basins:** 0 | **Number of Dental Chairs:** 0
Number of Sewer Lines: 0 | **Number of Water Fountains:** 0 | **Number of Water Lines:** 0 | **Number of Water Heaters - Gas:** 0 | **Number of Water Heaters - Electric:** 1
Number of Water Softners: 0 | **Number of Kitchen Sinks:** 0 | **Number of Can Wash Sinks:** 0 | **Number of Water Tanks:** 0 | **Number of Feed Water Treatments:** 0
Number of Other Sinks: 0 | **Number of Bidets:** 0 | **Number of Washing Machines:** 0 | **Number of Interceptors:** 0 | **Number of Dishwashers:** 0
Number of Roof Leaders: 0 | **Number of Garbage Disposals:** 0 | **Number of Gas Pipings:** 0 | **Other:** 0 | **Number of Floor Drains:** 0
Reactivated: No | **Plumber to Install Water & Sewer:** No | **Standalone Plumbing Permit:** Yes | **Subdivision:** | **Acres:** 4.2
Power Co.: DUKE
Description: Replacement of hotwater heater

PLMC-012855-2022 | **Type:** Plumbing (Non-Residential) | **District:** Sanford | **Main Address:** 724 Spring Lane
Status: Issued | **Workclass:** New | **Project:** | **Parcel:** | Sanford, NC 27330
Application Date: 01/21/2022 | **Issue Date:** 01/26/2022 | **Expiration:** 07/25/2022 | **Last Inspection:** | **Finaled Date:**
Zone: | **Sq Ft:** 0 | **Valuation:** $0.00 | **Assigned To:**
Additional Info:
Contractor PIN #: 16813 | **Number of Bathtubs:** 0 | **Number of Lanundry Tubs:** 0 | **Number of Spa Tubs:** 0 | **Number of Showers:** 0
Number of Lavatories: 0 | **Number of Water Closets:** 0 | **Number of Urinals:** 0 | **Number of Catch Basins:** 0 | **Number of Dental Chairs:** 0
Number of Sewer Lines: 1 | **Number of Water Fountains:** 0 | **Number of Water Lines:** 0 | **Number of Water Heaters - Gas:** 0 | **Number of Water Heaters - Electric:** 0
Number of Water Softners: 0 | **Number of Kitchen Sinks:** 0 | **Number of Can Wash Sinks:** 0 | **Number of Water Tanks:** 0 | **Number of Feed Water Treatments:** 0
Number of Other Sinks: 0 | **Number of Bidets:** 0 | **Number of Washing Machines:** 0 | **Number of Interceptors:** 0 | **Number of Dishwashers:** 0
Number of Roof Leaders: 0 | **Number of Garbage Disposals:** 0 | **Number of Gas Pipings:** 0 | **Other:** 0 | **Number of Floor Drains:** 0
Reactivated: No | **Building Permit #:** BLDC-010794-2021 | **Plumber to Install Water & Sewer:** No | **Standalone Plumbing Permit:** No
Description: Sewer Line for 724 Shell Building and suites

PLMC-012913-2022 | **Type:** Plumbing (Non-Residential) | **District:** Sanford | **Main Address:** 310 Court Sq
Status: Complete | **Workclass:** Other | **Project:** | **Parcel:** 9652-14-3661-00 | Sanford, NC 27330
Application Date: 01/27/2022 | **Issue Date:** 01/27/2022 | **Expiration:** 01/31/2023 | **Last Inspection:** 01/31/2022 | **Finaled Date:** 01/31/2022
Zone: OI OI | **Sq Ft:** 0 | **Valuation:** $0.00 | **Assigned To:**
Additional Info:
Number of Water Heaters - Gas: 1 | **Number of Gas Pipings:** 1 | **Reactivated:** No | **Plumber to Install Water & Sewer:** No | **Standalone Plumbing Permit:** Yes
Subdivision: COURT SQUARE | **Acres:** 0.246292 | **Power Co.:** DUKE
Description: PROPOSED TANKLESS GAS WATER HEATER INSTALL, WATER LINE AND GAS PIPING

PLMC-012921-2022 | **Type:** Plumbing (Non-Residential) | **District:** Sanford | **Main Address:** 133 S Steele St
Status: Issued | **Workclass:** Other | **Project:** | **Parcel:** 9642-69-9705-00 | Sanford, NC 27330
Application Date: 01/28/2022 | **Issue Date:** 01/28/2022 | **Expiration:** 07/27/2022 | **Last Inspection:** | **Finaled Date:**
Zone: CBD CBD Central Business | **Sq Ft:** 0 | **Valuation:** $3,500.00 | **Assigned To:**
Additional Info:
Number of Water Heaters - Gas: 1 | **Reactivated:** No | **Plumber to Install Water & Sewer:** No | **Standalone Plumbing Permit:** No | **Historic District:** DOWNTOWN
Subdivision: | **Acres:** 0.0583001 | **Power Co.:** DUKE
Description: PROPOSED INTERIOR UPFIT OF EXISTING BUILDING INCLUDING KITCHEN UPGRADES, FLOORING AND STORAGE FOR MINS ICHIBAN BISTRO

PLMC-012926-2022 | **Type:** Plumbing (Non-Residential) | **District:** Sanford | **Main Address:** 2919 Beechtree Dr
Status: Issued | **Workclass:** Other | **Project:** | **Parcel:** 9644-43-1973-00 | Sanford, NC 27330
Application Date: 01/28/2022 | **Issue Date:** 01/28/2022 | **Expiration:** 01/31/2023 | **Last Inspection:** 01/31/2022 | **Finaled Date:**
Zone: R-20 R-20 | **Sq Ft:** 0 | **Valuation:** $0.00 | **Assigned To:**
Additional Info:
Number of Can Wash Sinks: 0 | **Number of Water Tanks:** 0 | **Number of Feed Water Treatments:** 0 | **Number of Other Sinks:** 4 | **Number of Bidets:** 0
Number of Washing Machines: 0 | **Number of Interceptors:** 0 | **Number of Dishwashers:** 0 | **Number of Roof Leaders:** 0 | **Number of Garbage Disposals:** 0
Number of Gas Pipings: 0 | **Number of Grease Traps:** 0 | **Other:** 0 | **Number of Floor Drains:** 2 | **Reactivated:** No
Building Permit #: 012460 | **Plumber to Install Water & Sewer:** No | **Standalone Plumbing Permit:** No | **Subdivision:** | **Acres:** 17.95
Contractor PIN #: 11987 | **Number of Bathtubs:** 0 | **Number of Lanundry Tubs:** 0 | **Number of Spa Tubs:** 0 | **Number of Showers:** 0
Number of Lavatories: 3 | **Number of Water Closets:** 3 | **Number of Urinals:** 0 | **Number of Catch Basins:** 0 | **Number of Dental Chairs:** 0
Number of Sewer Lines: 0 | **Number of Water Fountains:** 0 | **Number of Water Lines:** 0 | **Number of Water Heaters - Gas:** 0 | **Number of Water Heaters - Electric:** 0
Number of Water Softners: 0 | **Number of Kitchen Sinks:** 0
Description: Upfit Plumbing system for new MOB

PLMC-012938-2022 | **Type:** Plumbing (Non-Residential) | **District:** Sanford | **Main Address:** 1319 Gormly Cir
Status: Issued | **Workclass:** Other | **Project:** | **Parcel:** 9633-65-6014-00 | Sanford, NC 27330
Application Date: 01/31/2022 | **Issue Date:** 01/31/2022 | **Expiration:** 07/30/2022 | **Last Inspection:** | **Finaled Date:**
Zone: R-20 R-20 | **Sq Ft:** 0 | **Valuation:** $0.00 | **Assigned To:**
Additional Info:
Reactivated: No | **Plumber to Install Water & Sewer:** No | **Standalone Plumbing Permit:** Yes | **Subdivision:** | **Acres:** 4.77
Power Co.: DUKE
Description: PROPOSED WATER LINE INSTALL FOR WESTLAKE VALLEY POOL & RAQUET CLUB

PERMITS ISSUED FOR PLUMBING (NON-RESIDENTIAL): 8

PLUMBING (RESIDENTIAL)

PLMR-012413-2021 | **Type:** Plumbing (Residential) | **District:** Sanford | **Main Address:** 716 Bucktail Ln
Status: Issued | **Workclass:** New | **Project:** | **Parcel:** 9632-19-5754-00 | Sanford, NC 27330
Application Date: 12/09/2021 | **Issue Date:** 01/18/2022 | **Expiration:** 01/19/2023 | **Last Inspection:** 01/19/2022 | **Finaled Date:**
Zone: CZ CZ | **Sq Ft:** 3,736 | **Valuation:** $395,000.00 | **Assigned To:**
Additional Info:
Number of Full Baths: 3 | **Reactivated:** No | **Plumber to Install Water & Sewer:** Yes | **Standalone Plumbing Permit:** No | **Subdivision:** CARBONTON COVE
Watershed: DEEP RIVER / LEE COUNTY | **Acres:** 0.629427 | **Power Co.:** DUKE

Description: NEW SFD - LOT 18

PLMR-012457-2021 | **Type:** Plumbing (Residential) | **District:** Lee County (Unincorporated) | **Main Address:** 235 Saintsbury Place
Status: Issued | **Workclass:** New | **Project:** | **Parcel:** | Sanford 27332
Application Date: 12/14/2021 | **Issue Date:** 01/03/2022 | **Expiration:** 01/05/2023 | **Last Inspection:** 01/05/2022 | **Finaled Date:**
Zone: | **Sq Ft:** 0 | **Valuation:** $0.00 | **Assigned To:**
Additional Info:
Contractor PIN #: P1-33428 | **Number of Bathtubs:** 0 | **Number of Lanundry Tubs:** 0 | **Number of Spa Tubs:** 0 | **Number of Full Baths:** 3
Number of Showers: 0 | **Number of Half Baths:** 0 | **Number of Lavatories:** 0 | **Manufactured Home Single-Wide:** 0 | **Number of Water Closets:** 0
Manufactured Home Double-Wide: 0 | **Number of Urinals:** 0 | **Manufactured Home Triple-Wide:** 0 | **Number of Catch Basins:** 0 | **Number of Dental Chairs:** 0
Number of Sewer Lines: 0 | **Number of Water Fountains:** 0 | **Number of Water Lines:** 0 | **Number of Water Heaters - Gas:** 0 | **Number of Water Heaters - Electric:** 0
Number of Water Softners: 0 | **Number of Kitchen Sinks:** 0 | **Number of Can Wash Sinks:** 0 | **Number of Water Tanks:** 0 | **Number of Feed Water Treatments:** 0
Number of Other Sinks: 0 | **Number of Bidets:** 0 | **Number of Washing Machines:** 0 | **Number of Interceptors:** 0 | **Number of Dishwashers:** 0
Number of Roof Leaders: 0 | **Number of Garbage Disposals:** 0 | **Number of Gas Pipings:** 0 | **Other:** 0 | **Number of Floor Drains:** 0
Reactivated: No | **Building Permit #:** 010936 | **Plumber to Install Water & Sewer:** No | **Standalone Plumbing Permit:** No

---

PLMR-012613-2021 | **Type:** Plumbing (Residential) | **District:** Lee County (Unincorporated) | **Main Address:** 1730 Blackstone
Status: Issued | **Workclass:** New | **Project:** | **Parcel:** 9611-31-5629-00 | Sanford, NC 27330
Application Date: 12/30/2021 | **Issue Date:** 01/03/2022 | **Expiration:** 01/12/2023 | **Last Inspection:** 01/12/2022 | **Finaled Date:**
Zone: RA RA Residential Agricultural | **Sq Ft:** 0 | **Valuation:** $0.00 | **Assigned To:**
Additional Info:
Contractor PIN #: 34800 | **Number of Bathtubs:** 0 | **Number of Lanundry Tubs:** 0 | **Number of Spa Tubs:** 0 | **Number of Full Baths:** 2
Number of Showers: 0 | **Number of Half Baths:** 1 | **Number of Lavatories:** 0 | **Manufactured Home Single-Wide:** 0 | **Number of Water Closets:** 0
Manufactured Home Double-Wide: 0 | **Number of Urinals:** 0 | **Manufactured Home Triple-Wide:** 0 | **Number of Catch Basins:** 0 | **Number of Dental Chairs:** 0
Number of Sewer Lines: 0 | **Number of Water Fountains:** 0 | **Number of Water Lines:** 0 | **Number of Water Heaters - Gas:** 0 | **Number of Water Heaters - Electric:** 0
Number of Water Softners: 0 | **Number of Kitchen Sinks:** 0 | **Number of Can Wash Sinks:** 0 | **Number of Water Tanks:** 0 | **Number of Feed Water Treatments:** 0
Number of Other Sinks: 0 | **Number of Bidets:** 0 | **Number of Washing Machines:** 0 | **Number of Interceptors:** 0 | **Number of Dishwashers:** 0
Number of Roof Leaders: 0 | **Number of Garbage Disposals:** 0 | **Number of Gas Pipings:** 0 | **Other:** 0 | **Number of Floor Drains:** 0
Reactivated: No | **Building Permit #:** | **Plumber to Install Water & Sewer:** No | **Standalone Plumbing Permit:** No | **Subdivision:**
Acres: 1
Description: NEW CONSTRUCTION HOME

PLMR-012614-2021 | **Type:** Plumbing (Residential) | **District:** Lee County (Unincorporated) | **Main Address:** 2614 Broadway Rd
Status: Complete | **Workclass:** Other | **Project:** | **Parcel:** 9672-63-8814-00 | Sanford, NC 27332
Application Date: 12/30/2021 | **Issue Date:** 01/07/2022 | **Expiration:** 01/19/2023 | **Last Inspection:** 01/19/2022 | **Finaled Date:** 01/19/2022
Zone: RA RA Residential Agricultural | **Sq Ft:** 0 | **Valuation:** $0.00 | **Assigned To:**
Additional Info:
Contractor PIN #: 31056 | **Number of Bathtubs:** 0 | **Number of Lanundry Tubs:** 0 | **Number of Spa Tubs:** 0 | **Number of Full Baths:** 0
Number of Showers: 0 | **Number of Half Baths:** 0 | **Number of Lavatories:** 0 | **Manufactured Home Single-Wide:** 0 | **Number of Water Closets:** 0
Manufactured Home Double-Wide: 0 | **Number of Urinals:** 0 | **Manufactured Home Triple-Wide:** 0 | **Number of Catch Basins:** 0 | **Number of Dental Chairs:** 0
Number of Sewer Lines: 0 | **Number of Water Fountains:** 0 | **Number of Water Lines:** 0 | **Number of Water Heaters - Gas:** 0 | **Number of Water Heaters - Electric:** 0
Number of Water Softners: 0 | **Number of Kitchen Sinks:** 0 | **Number of Can Wash Sinks:** 0 | **Number of Water Tanks:** 0 | **Number of Feed Water Treatments:** 0
Number of Other Sinks: 0 | **Number of Bidets:** 0 | **Number of Washing Machines:** 0 | **Number of Interceptors:** 0 | **Number of Dishwashers:** 0
Number of Roof Leaders: 0 | **Number of Garbage Disposals:** 0 | **Number of Gas Pipings:** 0 | **Other:** 1 | **Number of Floor Drains:** 0

Reactivated: No | **Building Permit #:** | **Plumber to Install Water & Sewer:** No | **Standalone Plumbing Permit:** No | **Subdivision:**
Acres: 2.41
Description: Replacing septic drain lines

PLMR-012616-2021 | **Type:** Plumbing (Residential) | **District:** Lee County (Unincorporated) | **Main Address:** 1780 Blackstone Rd Sanford, NC 27330
Status: Issued | **Workclass:** New | **Project:** | **Parcel:** 9611-31-4541-00
Application Date: 12/30/2021 | **Issue Date:** 01/04/2022 | **Expiration:** 01/12/2023 | **Last Inspection:** 01/12/2022 | **Finaled Date:**
Zone: RA RA Residential Agricultural | **Sq Ft:** 0 | **Valuation:** $0.00 | **Assigned To:**
Additional Info:
Contractor PIN #: 34800 | **Number of Bathtubs:** 0 | **Number of Lanundry Tubs:** 0 | **Number of Spa Tubs:** 0 | **Number of Full Baths:** 2
Number of Showers: 0 | **Number of Half Baths:** 1 | **Number of Lavatories:** 0 | **Manufactured Home Single-Wide:** 0 | **Number of Water Closets:** 0
Manufactured Home Double-Wide: 0 | **Number of Urinals:** 0 | **Manufactured Home Triple-Wide:** 0 | **Number of Catch Basins:** 0 | **Number of Dental Chairs:** 0
Number of Sewer Lines: 0 | **Number of Water Fountains:** 0 | **Number of Water Lines:** 0 | **Number of Water Heaters - Gas:** 0 | **Number of Water Heaters - Electric:** 0
Number of Water Softners: 0 | **Number of Kitchen Sinks:** 0 | **Number of Can Wash Sinks:** 0 | **Number of Water Tanks:** 0 | **Number of Feed Water Treatments:** 0
Number of Other Sinks: 0 | **Number of Bidets:** 0 | **Number of Washing Machines:** 0 | **Number of Interceptors:** 0 | **Number of Dishwashers:** 0
Number of Roof Leaders: 0 | **Number of Garbage Disposals:** 0 | **Number of Gas Pipings:** 0 | **Other:** 0 | **Number of Floor Drains:** 0
Reactivated: No | **Building Permit #:** 11870 | **Plumber to Install Water & Sewer:** Yes | **Standalone Plumbing Permit:** No | **Subdivision:**
Acres: 1
Description: NEW CONSTRUCTION HOME

PLMR-012617-2021 | **Type:** Plumbing (Residential) | **District:** Lee County (Unincorporated) | **Main Address:** 1706 Blackstone Rd Sanford, NC 27330
Status: Issued | **Workclass:** New | **Project:** | **Parcel:** 9611-31-2725-00
Application Date: 12/30/2021 | **Issue Date:** 01/03/2022 | **Expiration:** 01/12/2023 | **Last Inspection:** 01/12/2022 | **Finaled Date:**
Zone: RA RA Residential Agricultural | **Sq Ft:** 0 | **Valuation:** $0.00 | **Assigned To:**
Additional Info:
Contractor PIN #: 34800 | **Number of Bathtubs:** 0 | **Number of Lanundry Tubs:** 0 | **Number of Spa Tubs:** 0 | **Number of Full Baths:** 2
Number of Showers: 0 | **Number of Half Baths:** 1 | **Number of Lavatories:** 0 | **Manufactured Home Single-Wide:** 0 | **Number of Water Closets:** 0
Manufactured Home Double-Wide: 0 | **Number of Urinals:** 0 | **Manufactured Home Triple-Wide:** 0 | **Number of Catch Basins:** 0 | **Number of Dental Chairs:** 0
Number of Sewer Lines: 0 | **Number of Water Fountains:** 0 | **Number of Water Lines:** 0 | **Number of Water Heaters - Gas:** 0 | **Number of Water Heaters - Electric:** 0
Number of Water Softners: 0 | **Number of Kitchen Sinks:** 0 | **Number of Can Wash Sinks:** 0 | **Number of Water Tanks:** 0 | **Number of Feed Water Treatments:** 0
Number of Other Sinks: 0 | **Number of Bidets:** 0 | **Number of Washing Machines:** 0 | **Number of Interceptors:** 0 | **Number of Dishwashers:** 0
Number of Roof Leaders: 0 | **Number of Garbage Disposals:** 0 | **Number of Gas Pipings:** 0 | **Other:** 0 | **Number of Floor Drains:** 0
Reactivated: No | **Building Permit #:** 11871 | **Plumber to Install Water & Sewer:** Yes | **Standalone Plumbing Permit:** No | **Subdivision:**
Acres: 1.63
Description: NEW CONSTRUCTION HOME

PLMR-012631-2022 | **Type:** Plumbing (Residential) | **District:** Sanford | **Main Address:** 1820 Sutphin Dr Sanford, NC 27330
Status: Issued | **Workclass:** Alteration | **Project:** | **Parcel:** 9633-71-5291-00
Application Date: 01/03/2022 | **Issue Date:** 01/05/2022 | **Expiration:** 01/19/2023 | **Last Inspection:** 01/19/2022 | **Finaled Date:**
Zone: R-20 R-20 | **Sq Ft:** 0 | **Valuation:** $39,360.00 | **Assigned To:**
Additional Info:
Number of Bathtubs: 1 | **Number of Showers:** 1 | **Number of Lavatories:** 2 | **Number of Water Closets:** 1 | **Reactivated:** No
Plumber to Install Water & Sewer: No | **Standalone Plumbing Permit:** No | **Subdivision:** CARBONTON HEIGHTS | **Acres:** 0.509494 | **Power Co.:** DUKE

Description: INTERIOR & EXTERIOR REMODEL

PLMR-012636-2022 | **Type:** Plumbing (Residential) | **District:** Lee County (Unincorporated) | **Main Address:** 735 Greenwood Rd
Status: Issued | **Workclass:** Alteration | **Project:** | **Parcel:** 9549-45-1267-00 | Sanford, NC 27332
Application Date: 01/04/2022 | **Issue Date:** 01/13/2022 | **Expiration:** 01/18/2023 | **Last Inspection:** 01/18/2022 | **Finaled Date:**
Zone: RR RR | **Sq Ft:** 0 | **Valuation:** $0.00 | **Assigned To:**
Additional Info:
Contractor PIN #: 29173 | **Number of Bathtubs:** 1 | **Number of Lanundry Tubs:** 0 | **Number of Spa Tubs:** 0 | **Number of Full Baths:** 0
Number of Showers: 1 | **Number of Half Baths:** 0 | **Number of Lavatories:** 2 | **Manufactured Home Single-Wide:** 0 | **Number of Water Closets:** 2
Manufactured Home Double-Wide: 0 | **Number of Urinals:** 0 | **Manufactured Home Triple-Wide:** 0 | **Number of Catch Basins:** 0 | **Number of Dental Chairs:** 0
Number of Sewer Lines: 0 | **Number of Water Fountains:** 0 | **Number of Water Lines:** 0 | **Number of Water Heaters - Gas:** 0 | **Number of Water Heaters - Electric:** 1
Number of Water Softners: 0 | **Number of Kitchen Sinks:** 1 | **Number of Can Wash Sinks:** 0 | **Number of Water Tanks:** 0 | **Number of Feed Water Treatments:** 0
Number of Other Sinks: 0 | **Number of Bidets:** 0 | **Number of Washing Machines:** 1 | **Number of Interceptors:** 0 | **Number of Dishwashers:** 1
Number of Roof Leaders: 0 | **Number of Garbage Disposals:** 0 | **Number of Gas Pipings:** 0 | **Other:** 0 | **Number of Floor Drains:** 0
Reactivated: No | **Building Permit #:** | **Plumber to Install Water & Sewer:** No | **Standalone Plumbing Permit:** Yes | **Subdivision:**
Acres: 0.698101
Description: replace all DWV piping and water distribution piping as allowed where not concealed. Work had been stated by others, completed DWV and water piping in crawl space. Water heater, 2 bathrooms, kitchen and laundry

---

PLMR-012641-2022 | **Type:** Plumbing (Residential) | **District:** Lee County (Unincorporated) | **Main Address:** 1387 Avents Ferry Rd
Status: Issued | **Workclass:** Alteration | **Project:** | **Parcel:** 9672-59-4273-00 | Sanford, NC 27330
Application Date: 01/04/2022 | **Issue Date:** 01/04/2022 | **Expiration:** 01/05/2023 | **Last Inspection:** 01/05/2022 | **Finaled Date:**
Zone: RA RA Residential Agricultural | **Sq Ft:** 0 | **Valuation:** $0.00 | **Assigned To:**
Additional Info:
Number of Water Heaters - Gas: 1 | **Number of Gas Pipings:** 1 | **Other:** 0 | **Reactivated:** No | **Plumber to Install Water & Sewer:** No
Standalone Plumbing Permit: Yes | **Subdivision:** | **Watershed:** CAPE FEAR / LEE COUNTY | **Acres:** 17.0006 | **Power Co.:** CEMC
Description: PROPOSED TANKLESS WATER HEATER AND GAS PIPING TO GENERATOR INSTALL

PLMR-012653-2022 | **Type:** Plumbing (Residential) | **District:** Lee County (Unincorporated) | **Main Address:** 435 Maggie Ln
Status: Issued | **Workclass:** Manufactured Home | **Project:** | **Parcel:** 9559-84-4470-00 | Sanford, NC 27332
Application Date: 01/05/2022 | **Issue Date:** 01/05/2022 | **Expiration:** 07/04/2022 | **Last Inspection:** | **Finaled Date:**
Zone: RA/MH RA/MH | **Sq Ft:** 0 | **Valuation:** $0.00 | **Assigned To:**
Additional Info:
Manufactured Home Single-Wide: 1 | **Reactivated:** No | **Plumber to Install Water & Sewer:** No | **Standalone Plumbing Permit:** No | **Subdivision:**
Acres: 1.99623 | **Power Co.:** DUKE
Description: SET UP OF SINGLE WIDE

PLMR-012657-2022 | **Type:** Plumbing (Residential) | **District:** Sanford | **Main Address:** 600 N Currie Dr
Status: Issued | **Workclass:** Alteration | **Project:** BROOKWOOD | **Parcel:** 9632-87-8895-00 | Sanford, NC 27330
Application Date: 01/05/2022 | **Issue Date:** 01/05/2022 | **Expiration:** 07/04/2022 | **Last Inspection:** | **Finaled Date:**
Zone: R-20 R-20 | **Sq Ft:** 0 | **Valuation:** $42,000.00 | **Assigned To:**
Additional Info:
Number of Bathtubs: 1 | **Number of Showers:** 1 | **Number of Lavatories:** 3 | **Number of Water Closets:** 2 | **Number of Kitchen Sinks:** 1
Number of Washing Machines: 1 | **Number of Dishwashers:** 1 | **Reactivated:** No | **Building Permit #:** 12068 | **Plumber to Install Water & Sewer:** No
Standalone Plumbing Permit: No | **Subdivision:** BROOKWOOD | **Acres:** 0.729357 | **Power Co.:** DUKE

Description: PLUMBING OF 10 FIXTURES (KITCHEN SINK, WASHING MACHINE, DISH WASHER, BATH TUB, SHOWER, 3 LAVS AND 2 WATER CLOSETS) FOR KITCHEN & BATH REMODEL (MASTER BATH - HALL BATH- KITCHEN)

PLMR-012684-2022 | **Type:** Plumbing (Residential) | **District:** Lee County (Unincorporated) | **Main Address:** 253 Saintsbury Pl
Status: Issued | **Workclass:** New | **Project:** | **Parcel:** 9519-68-7998-00 | Sanford, NC 27332
Application Date: 01/07/2022 | **Issue Date:** 01/10/2022 | **Expiration:** 01/11/2023 | **Last Inspection:** 01/11/2022 | **Finaled Date:**
Zone: RA RA Residential Agricultural | **Sq Ft:** 0 | **Valuation:** $0.00 | **Assigned To:**
Additional Info:
Contractor PIN #: 34800 | **Number of Bathtubs:** 0 | **Number of Lanundry Tubs:** 0 | **Number of Spa Tubs:** 0 | **Number of Full Baths:** 3
Number of Showers: 0 | **Number of Half Baths:** 1 | **Number of Lavatories:** 0 | **Manufactured Home Single-Wide:** 0 | **Number of Water Closets:** 0
Manufactured Home Double-Wide: 0 | **Number of Urinals:** 0 | **Manufactured Home Triple-Wide:** 0 | **Number of Catch Basins:** 0 | **Number of Dental Chairs:** 0
Number of Sewer Lines: 0 | **Number of Water Fountains:** 0 | **Number of Water Lines:** 0 | **Number of Water Heaters - Gas:** 0 | **Number of Water Heaters - Electric:** 0
Number of Water Softners: 0 | **Number of Kitchen Sinks:** 0 | **Number of Can Wash Sinks:** 0 | **Number of Water Tanks:** 0 | **Number of Feed Water Treatments:** 0
Number of Other Sinks: 0 | **Number of Bidets:** 0 | **Number of Washing Machines:** 0 | **Number of Interceptors:** 0 | **Number of Dishwashers:** 0
Number of Roof Leaders: 0 | **Number of Garbage Disposals:** 0 | **Number of Gas Pipings:** 0 | **Other:** 0 | **Number of Floor Drains:** 0
Reactivated: No | **Building Permit #:** 010505 | **Plumber to Install Water & Sewer:** Yes | **Standalone Plumbing Permit:** No | **Subdivision:** BOCA ESTATES
Acres: 1.03276 | **Power Co.:** DUKE
Description: new construction plumbing

PLMR-012698-2022 | **Type:** Plumbing (Residential) | **District:** Sanford | **Main Address:** 2009 Jasany St
Status: Issued | **Workclass:** Other | **Project:** | **Parcel:** 9633-25-8907-00 | Sanford, NC 27330
Application Date: 01/10/2022 | **Issue Date:** 01/11/2022 | **Expiration:** 01/19/2023 | **Last Inspection:** 01/19/2022 | **Finaled Date:**
Zone: R-20 R-20 | **Sq Ft:** 0 | **Valuation:** $0.00 | **Assigned To:**
Additional Info:
Contractor PIN #: 10924 | **Number of Bathtubs:** 0 | **Number of Lanundry Tubs:** 0 | **Number of Spa Tubs:** 0 | **Number of Full Baths:** 0
Number of Showers: 0 | **Number of Half Baths:** 0 | **Number of Lavatories:** 0 | **Manufactured Home Single-Wide:** 0 | **Number of Water Closets:** 0
Manufactured Home Double-Wide: 0 | **Number of Urinals:** 0 | **Manufactured Home Triple-Wide:** 0 | **Number of Catch Basins:** 0 | **Number of Dental Chairs:** 0
Number of Sewer Lines: 0 | **Number of Water Fountains:** 0 | **Number of Water Lines:** 0 | **Number of Water Heaters - Gas:** 0 | **Number of Water Heaters - Electric:** 0
Number of Water Softners: 0 | **Number of Kitchen Sinks:** 0 | **Number of Can Wash Sinks:** 0 | **Number of Water Tanks:** 0 | **Number of Feed Water Treatments:** 0
Number of Other Sinks: 0 | **Number of Bidets:** 0 | **Number of Washing Machines:** 0 | **Number of Interceptors:** 0 | **Number of Dishwashers:** 0
Number of Roof Leaders: 0 | **Number of Garbage Disposals:** 0 | **Number of Gas Pipings:** 0 | **Other:** 0 | **Number of Floor Drains:** 0
Reactivated: No | **Building Permit #:** | **Plumber to Install Water & Sewer:** No | **Standalone Plumbing Permit:** Yes | **Subdivision:** WESTWINDS
Acres: 1.15351 | **Power Co.:** DUKE
Description: sewer line to city tap

PLMR-012701-2022 | **Type:** Plumbing (Residential) | **District:** Lee County (Unincorporated) | **Main Address:** 5189 Sugar Maple Rd
Status: Issued | **Workclass:** New | **Project:** | **Parcel:** 9538-19-2646-00 | Sanford, NC 27332
Application Date: 01/10/2022 | **Issue Date:** 01/10/2022 | **Expiration:** 01/11/2023 | **Last Inspection:** 01/11/2022 | **Finaled Date:**
Zone: RA RA Residential Agricultural | **Sq Ft:** 2,950 | **Valuation:** $185,000.00 | **Assigned To:**
Additional Info:
Number of Bathtubs: 1 | **Number of Showers:** 1 | **Number of Lavatories:** 2 | **Number of Water Closets:** 2 | **Number of Sewer Lines:** 1
Number of Water Lines: 1 | **Number of Kitchen Sinks:** 1 | **Number of Washing Machines:** 1 | **Number of Dishwashers:** 1 | **Reactivated:** No
Plumber to Install Water & Sewer: No | **Standalone Plumbing Permit:** No | **Subdivision:** | **Watershed:** LITTLE RIVER / LEE COUNTY | **Acres:** 3.79
Power Co.: DUKE

Description: NEW SFD

PLMR-012703-2022
Status: Issued
Application Date: 01/10/2022
Zone: RR RR
Additional Info:
Type: Plumbing (Residential)
Workclass: New
Issue Date: 01/11/2022
Sq Ft: 0
District: Lee County (Unincorporated)
Project:
Expiration: 07/10/2022
Valuation: $0.00
Main Address: 217 Kensington Dr Sanford, NC 27330
Parcel: 9661-83-5514-00
Last Inspection:
Finaled Date:
Assigned To:

Contractor PIN #: 32853
Number of Bathtubs: 0
Number of Lanundry Tubs: 0
Number of Spa Tubs: 0
Number of Full Baths: 2
Number of Showers: 0
Number of Half Baths: 0
Number of Lavatories: 0
Manufactured Home Single-Wide: 0
Number of Water Closets: 0
Manufactured Home Double-Wide: 0
Number of Urinals: 0
Manufactured Home Triple-Wide: 0
Number of Catch Basins: 0
Number of Dental Chairs: 0
Number of Sewer Lines: 0
Number of Water Fountains: 0
Number of Water Lines: 0
Number of Water Heaters - Gas: 0
Number of Water Heaters - Electric: 0
Number of Water Softners: 0
Number of Kitchen Sinks: 0
Number of Can Wash Sinks: 0
Number of Water Tanks: 0
Number of Feed Water Treatments: 0
Number of Other Sinks: 0
Number of Bidets: 0
Number of Washing Machines: 0
Number of Interceptors: 0
Number of Dishwashers: 0
Number of Roof Leaders: 0
Number of Garbage Disposals: 0
Number of Gas Pipings: 0
Other: 0
Number of Floor Drains: 0
Reactivated: No
Building Permit #: BRES-012556-2021
Plumber to Install Water & Sewer: Yes
Standalone Plumbing Permit: No
Subdivision: LEXINGTON FARMS
Acres: 0.75
Power Co.: DUKE
Description: Full Bath-2
Half Bath-0

PLMR-012704-2022
Status: Issued
Application Date: 01/10/2022
Zone:
Additional Info:
Type: Plumbing (Residential)
Workclass: New
Issue Date: 01/11/2022
Sq Ft: 0
District: Lee County (Unincorporated)
Project:
Expiration: 07/10/2022
Valuation: $0.00
Main Address: 213 Kensington Dr Sanford, NC 27330
Parcel:
Last Inspection:
Finaled Date:
Assigned To:

Contractor PIN #: 32853
Number of Bathtubs: 0
Number of Lanundry Tubs: 0
Number of Spa Tubs: 0
Number of Full Baths: 3
Number of Showers: 0
Number of Half Baths: 0
Number of Lavatories: 0
Manufactured Home Single-Wide: 0
Number of Water Closets: 0
Manufactured Home Double-Wide: 0
Number of Urinals: 0
Manufactured Home Triple-Wide: 0
Number of Catch Basins: 0
Number of Dental Chairs: 0
Number of Sewer Lines: 0
Number of Water Fountains: 0
Number of Water Lines: 0
Number of Water Heaters - Gas: 0
Number of Water Heaters - Electric: 0
Number of Water Softners: 0
Number of Kitchen Sinks: 0
Number of Can Wash Sinks: 0
Number of Water Tanks: 0
Number of Feed Water Treatments: 0
Number of Other Sinks: 0
Number of Bidets: 0
Number of Washing Machines: 0
Number of Interceptors: 0
Number of Dishwashers: 0
Number of Roof Leaders: 0
Number of Garbage Disposals: 0
Number of Gas Pipings: 0
Other: 0
Number of Floor Drains: 0
Reactivated: No
Building Permit #: BRES-012555-2021
Plumber to Install Water & Sewer: Yes
Standalone Plumbing Permit: No
Description: Full Bath-3
Half Bath-0

PLMR-012746-2022
Status: Issued
Application Date: 01/12/2022
Zone:
Additional Info:
Type: Plumbing (Residential)
Workclass: New
Issue Date: 01/13/2022
Sq Ft: 0
District: Lee County (Unincorporated)
Project:
Expiration: 07/12/2022
Valuation: $0.00
Main Address: 160 Edgefield Dr Sanford, NC 27332
Parcel:
Last Inspection:
Finaled Date:
Assigned To:

Contractor PIN #: 21649
Number of Bathtubs: 0
Number of Lanundry Tubs: 0
Number of Spa Tubs: 0
Number of Full Baths: 2
Number of Showers: 0
Number of Half Baths: 1
Number of Lavatories: 0
Manufactured Home Single-Wide: 0
Number of Water Closets: 0
Manufactured Home Double-Wide: 0
Number of Urinals: 0
Manufactured Home Triple-Wide: 0
Number of Catch Basins: 0
Number of Dental Chairs: 0
Number of Sewer Lines: 0
Number of Water Fountains: 0
Number of Water Lines: 0
Number of Water Heaters - Gas: 0
Number of Water Heaters - Electric: 0
Number of Water Softners: 0
Number of Kitchen Sinks: 0
Number of Can Wash Sinks: 0
Number of Water Tanks: 0
Number of Feed Water Treatments: 0

Number of Other Sinks: 0 **Number of Bidets:** 0 **Number of Washing Machines:** 0 **Number of Interceptors:** 0 **Number of Dishwashers:** 0
Number of Roof Leaders: 0 **Number of Garbage Disposals:** 0 **Number of Gas Pipings:** 0 **Other:** 0 **Number of Floor Drains:** 0
Reactivated: No **Building Permit #:** **Plumber to Install Water & Sewer:** No **Standalone Plumbing Permit:** Yes
Description: plumbing rough in and trim out

PLMR-012748-2022 **Type:** Plumbing (Residential) **District:** Lee County (Unincorporated) **Main Address:** 611 Pine Forrest Rd
Status: Complete **Workclass:** Alteration **Project:** **Parcel:** 9537-37-2760-00 Cameron, NC 28326
Application Date: 01/12/2022 **Issue Date:** 01/21/2022 **Expiration:** 01/24/2023 **Last Inspection:** 01/24/2022 **Finaled Date:** 01/24/2022
Zone: RA RA Residential Agricultural **Sq Ft:** 0 **Valuation:** $0.00 **Assigned To:**
Additional Info:
Contractor PIN #: 18781 **Number of Bathtubs:** 0 **Number of Lanundry Tubs:** 0 **Number of Spa Tubs:** 0 **Number of Full Baths:** 0
Number of Showers: 0 **Number of Half Baths:** 0 **Number of Lavatories:** 0 **Manufactured Home Single-Wide:** 0 **Number of Water Closets:** 0
Manufactured Home Double-Wide: 0 **Number of Urinals:** 0 **Manufactured Home Triple-Wide:** 0 **Number of Catch Basins:** 0 **Number of Dental Chairs:** 0
Number of Sewer Lines: 0 **Number of Water Fountains:** 0 **Number of Water Lines:** 0 **Number of Water Heaters - Gas:** 0 **Number of Water Heaters - Electric:** 0
Number of Water Softners: 1 **Number of Kitchen Sinks:** 0 **Number of Can Wash Sinks:** 0 **Number of Water Tanks:** 0 **Number of Feed Water Treatments:** 0
Number of Other Sinks: 0 **Number of Bidets:** 0 **Number of Washing Machines:** 0 **Number of Interceptors:** 0 **Number of Dishwashers:** 0
Number of Roof Leaders: 0 **Number of Garbage Disposals:** 0 **Number of Gas Pipings:** 0 **Other:** 0 **Number of Floor Drains:** 0
Reactivated: No **Building Permit #:** **Plumber to Install Water & Sewer:** No **Standalone Plumbing Permit:** Yes **Subdivision:**
Watershed: LITTLE RIVER / LEE COUNTY **Acres:** 92.74
Description: Install water softener to main water line and install Reverse Osmosis to kitchen sink

---

PLMR-012756-2022 **Type:** Plumbing (Residential) **District:** Lee County (Unincorporated) **Main Address:** 6050 Homestead Cv
Status: Issued **Workclass:** New **Project:** **Parcel:** Sanford, NC 27332
Application Date: 01/13/2022 **Issue Date:** 01/13/2022 **Expiration:** 01/14/2023 **Last Inspection:** 01/14/2022 **Finaled Date:**
Zone: **Sq Ft:** 0 **Valuation:** $0.00 **Assigned To:**
Additional Info:
Contractor PIN #: 28648 **Number of Bathtubs:** 0 **Number of Lanundry Tubs:** 0 **Number of Spa Tubs:** 0 **Number of Full Baths:** 2
Number of Showers: 0 **Number of Half Baths:** 0 **Number of Lavatories:** 0 **Manufactured Home Single-Wide:** 0 **Number of Water Closets:** 0
Manufactured Home Double-Wide: 0 **Number of Urinals:** 0 **Manufactured Home Triple-Wide:** 0 **Number of Catch Basins:** 0 **Number of Dental Chairs:** 0
Number of Sewer Lines: 0 **Number of Water Fountains:** 0 **Number of Water Lines:** 0 **Number of Water Heaters - Gas:** 0 **Number of Water Heaters - Electric:** 0
Number of Water Softners: 0 **Number of Kitchen Sinks:** 0 **Number of Can Wash Sinks:** 0 **Number of Water Tanks:** 0 **Number of Feed Water Treatments:** 0
Number of Other Sinks: 0 **Number of Bidets:** 0 **Number of Washing Machines:** 0 **Number of Interceptors:** 0 **Number of Dishwashers:** 0
Number of Roof Leaders: 0 **Number of Garbage Disposals:** 0 **Number of Gas Pipings:** 0 **Other:** 0 **Number of Floor Drains:** 0
Reactivated: No **Building Permit #:** 011285 **Plumber to Install Water & Sewer:** No **Standalone Plumbing Permit:** No
Description: Plumb in new house
New construction

PLMR-012767-2022 **Type:** Plumbing (Residential) **District:** Lee County (Unincorporated) **Main Address:** 165 Edgefield Dr
Status: Issued **Workclass:** New **Project:** **Parcel:** Sanford, NC 27332
Application Date: 01/13/2022 **Issue Date:** 01/13/2022 **Expiration:** 01/14/2023 **Last Inspection:** 01/14/2022 **Finaled Date:**
Zone: **Sq Ft:** 0 **Valuation:** $0.00 **Assigned To:**
Additional Info:
Contractor PIN #: 21649 **Number of Bathtubs:** 0 **Number of Lanundry Tubs:** 0 **Number of Spa Tubs:** 0 **Number of Full Baths:** 3
Number of Showers: 0 **Number of Half Baths:** 0 **Number of Lavatories:** 0 **Manufactured Home Single-Wide:** 0 **Number of Water Closets:** 0

Manufactured Home Double-Wide: 0 **Number of Urinals:** 0 **Manufactured Home Triple-Wide:** 0 **Number of Catch Basins:** 0 **Number of Dental Chairs:** 0
Number of Sewer Lines: 0 **Number of Water Fountains:** 0 **Number of Water Lines:** 0 **Number of Water Heaters - Gas:** 0 **Number of Water Heaters - Electric:** 0
Number of Water Softners: 0 **Number of Kitchen Sinks:** 0 **Number of Can Wash Sinks:** 0 **Number of Water Tanks:** 0 **Number of Feed Water Treatments:** 0
Number of Other Sinks: 0 **Number of Bidets:** 0 **Number of Washing Machines:** 0 **Number of Interceptors:** 0 **Number of Dishwashers:** 0
Number of Roof Leaders: 0 **Number of Garbage Disposals:** 0 **Number of Gas Pipings:** 0 **Other:** 0 **Number of Floor Drains:** 0
Reactivated: No **Building Permit #:** 012223 **Plumber to Install Water & Sewer:** Yes **Standalone Plumbing Permit:** No
Description: PLUMBING ROUGH IN AND TRIM OUT PLUMBING

PLMR-012771-2022 **Type:** Plumbing (Residential) **District:** Lee County (Unincorporated) **Main Address:** 1417 W Carolina Dr
Status: Issued **Workclass:** Alteration **Project:** **Parcel:** 9670-25-6051-00 Sanford, NC 27332
Application Date: 01/13/2022 **Issue Date:** 01/13/2022 **Expiration:** 07/12/2022 **Last Inspection:** **Finaled Date:**
Zone: RR RR **Sq Ft:** 0 **Valuation:** $152,000.00 **Assigned To:**
Additional Info:
Number of Bathtubs: 1 **Number of Showers:** 1 **Number of Lavatories:** 1 **Number of Water Closets:** 1 **Number of Washing Machines:** 2
Reactivated: No **Building Permit #:** 12041 **Plumber to Install Water & Sewer:** No **Standalone Plumbing Permit:** No **Subdivision:** CAROLINA TRACE
Acres: 0.200135 **Power Co.:** DUKE
Description: PROPOSED (6) FIXTURES INSTALL (2 WASHING MACHINES, 1 BATH TUB, 1 SHOWER, 1 LAV AND 1 WATER CLOSET) FOR INTERIOR REMODEL

PLMR-012808-2022 **Type:** Plumbing (Residential) **District:** Lee County (Unincorporated) **Main Address:** 95 Eaker Dr
Status: Issued **Workclass:** New **Project:** **Parcel:** 9546-19-1951-00 Cameron, NC 28326
Application Date: 01/18/2022 **Issue Date:** 01/18/2022 **Expiration:** 01/20/2023 **Last Inspection:** 01/20/2022 **Finaled Date:**
Zone: RA RA Residential Agricultural **Sq Ft:** 4,530 **Valuation:** $400,000.00 **Assigned To:**
Additional Info:
Number of Full Baths: 4 **Reactivated:** No **Plumber to Install Water & Sewer:** No **Standalone Plumbing Permit:** No **Subdivision:** KENWOOD
Watershed: LITTLE RIVER / LEE COUNTY **Acres:** 2.51 **Power Co.:** CEMC
Description: NEW SFD- LOT 47

PLMR-012824-2022 **Type:** Plumbing (Residential) **District:** Lee County (Unincorporated) **Main Address:** 8605 Harrington Pl
Status: Issued **Workclass:** Alteration **Project:** **Parcel:** 9519-88-1857-00 Sanford, NC 27332
Application Date: 01/19/2022 **Issue Date:** 01/20/2022 **Expiration:** 01/21/2023 **Last Inspection:** 01/21/2022 **Finaled Date:**
Zone: RR RR **Sq Ft:** 0 **Valuation:** $0.00 **Assigned To:**
Additional Info:
Contractor PIN #: 32096 **Number of Bathtubs:** 0 **Number of Lanundry Tubs:** 0 **Number of Spa Tubs:** 0 **Number of Full Baths:** 0
Number of Showers: 0 **Number of Half Baths:** 0 **Number of Lavatories:** 0 **Manufactured Home Single-Wide:** 0 **Number of Water Closets:** 0
Manufactured Home Double-Wide: 0 **Number of Urinals:** 0 **Manufactured Home Triple-Wide:** 0 **Number of Catch Basins:** 0 **Number of Dental Chairs:** 0
Number of Sewer Lines: 0 **Number of Water Fountains:** 0 **Number of Water Lines:** 0 **Number of Water Heaters - Gas:** 0 **Number of Water Heaters - Electric:** 0
Number of Water Softners: 0 **Number of Kitchen Sinks:** 1 **Number of Can Wash Sinks:** 0 **Number of Water Tanks:** 0 **Number of Feed Water Treatments:** 0
Number of Other Sinks: 0 **Number of Bidets:** 0 **Number of Washing Machines:** 0 **Number of Interceptors:** 0 **Number of Dishwashers:** 0
Number of Roof Leaders: 0 **Number of Garbage Disposals:** 0 **Number of Gas Pipings:** 0 **Number of Grease Traps:** 0 **Other:** 0
Number of Floor Drains: 0 **Reactivated:** No **Building Permit #:** 012663-21 **Plumber to Install Water & Sewer:** No **Standalone Plumbing Permit:** No
Subdivision: LAKE VILLANOW **Acres:** 1.96249
Description: Moving kitchen sink 2ft

PLMR-012825-2022 **Type:** Plumbing (Residential) **District:** Sanford **Main Address:** 401 N Vance St
Status: Issued **Workclass:** New **Project:** **Parcel:** 9643-40-3730-00 Sanford, NC 27330
Application Date: 01/19/2022 **Issue Date:** 01/19/2022 **Expiration:** 01/26/2023 **Last Inspection:** 01/26/2022 **Finaled Date:**
Zone: R-12 R-12 Residential Mixed **Sq Ft:** 0 **Valuation:** $210,000.00 **Assigned To:**
Additional Info:
Number of Bathtubs: 1 **Number of Lavatories:** 2 **Number of Water Closets:** 1 **Number of Kitchen Sinks:** 1 **Number of Washing Machines:** 1
Reactivated: No **Plumber to Install Water & Sewer:** No **Standalone Plumbing Permit:** No **Historic District:** ROSEMONT-MCKIVER **Subdivision:** ROSEMONT
Acres: 0.252492 **Power Co.:** DUKE
Description: REPAIR FROM FIRE DAMAGE

PLMR-012826-2022 **Type:** Plumbing (Residential) **District:** Lee County (Unincorporated) **Main Address:** 314 Hancock Crossing
Status: Issued **Workclass:** New **Project:** **Parcel:** 9538-68-4779-00 Sanford, NC 27332
Application Date: 01/19/2022 **Issue Date:** 01/27/2022 **Expiration:** 01/28/2023 **Last Inspection:** 01/28/2022 **Finaled Date:**
Zone: RA RA Residential Agricultural **Sq Ft:** 0 **Valuation:** $0.00 **Assigned To:**
Additional Info:
Contractor PIN #: 20809 **Number of Bathtubs:** 0 **Number of Lanundry Tubs:** 0 **Number of Spa Tubs:** 0 **Number of Full Baths:** 3
Number of Showers: 0 **Number of Half Baths:** 0 **Number of Lavatories:** 0 **Manufactured Home Single-Wide:** 0 **Number of Water Closets:** 0
Manufactured Home Double-Wide: 0 **Number of Urinals:** 0 **Manufactured Home Triple-Wide:** 0 **Number of Catch Basins:** 0 **Number of Dental Chairs:** 0
Number of Sewer Lines: 0 **Number of Water Fountains:** 0 **Number of Water Lines:** 0 **Number of Water Heaters - Gas:** 0 **Number of Water Heaters - Electric:** 0
Number of Water Softners: 0 **Number of Kitchen Sinks:** 0 **Number of Can Wash Sinks:** 0 **Number of Water Tanks:** 0 **Number of Feed Water Treatments:** 0
Number of Other Sinks: 0 **Number of Bidets:** 0 **Number of Washing Machines:** 0 **Number of Interceptors:** 0 **Number of Dishwashers:** 0
Number of Roof Leaders: 0 **Number of Garbage Disposals:** 0 **Number of Gas Pipings:** 0 **Number of Grease Traps:** 0 **Other:** 0
Number of Floor Drains: 0 **Reactivated:** No **Building Permit #:** BRES-012221-2021 **Plumber to Install Water & Sewer:** Yes **Standalone Plumbing Permit:** No
Subdivision: **Acres:** 2.00254
Description: Single Family new construction

PLMR-012861-2022 **Type:** Plumbing (Residential) **District:** Lee County (Unincorporated) **Main Address:** 7704 Villanow Dr
Status: Issued **Workclass:** Alteration **Project:** **Parcel:** 9519-97-0455-00 Sanford, NC 27332
Application Date: 01/24/2022 **Issue Date:** 01/24/2022 **Expiration:** 07/23/2022 **Last Inspection:** **Finaled Date:**
Zone: RR RR **Sq Ft:** 0 **Valuation:** $0.00 **Assigned To:**
Additional Info:
Number of Water Heaters - Gas: 1 **Reactivated:** No **Plumber to Install Water & Sewer:** No **Standalone Plumbing Permit:** No **Subdivision:** LAKE VILLANOW II
Acres: 1.95 **Power Co.:** DUKE
Description: GAS WATER HEATER

PLMR-012867-2022 **Type:** Plumbing (Residential) **District:** Lee County (Unincorporated) **Main Address:** 5100 Quail Hollow Rd
Status: Issued **Workclass:** New **Project:** **Parcel:** 9670-28-3163-00 Sanford, NC 27332
Application Date: 01/24/2022 **Issue Date:** 01/24/2022 **Expiration:** 01/31/2023 **Last Inspection:** 01/31/2022 **Finaled Date:**
Zone: RR RR **Sq Ft:** 1,689 **Valuation:** $243,275.00 **Assigned To:**
Additional Info:
Number of Full Baths: 2 **Reactivated:** No **Plumber to Install Water & Sewer:** No **Standalone Plumbing Permit:** No **Subdivision:** CAROLINA TRACE
Acres: 0.19 **Power Co.:** DUKE
Description: NEW SFD - LOT 5100 **PARTIAL REFUND -SEE NOTES -SRM

PERMITS ISSUED BY TYPE (01/03/2022 TO 01/31/2022)

PLMR-012881-2022 | **Type:** Plumbing (Residential) | **District:** Lee County (Unincorporated) | **Main Address:** 5991 Carbonton Rd
Status: Issued | **Workclass:** New | **Project:** | **Parcel:** 9604-71-3500-00 | Sanford, NC 27330
Application Date: 01/25/2022 | **Issue Date:** 01/25/2022 | **Expiration:** 07/24/2022 | **Last Inspection:** | **Finaled Date:**
Zone: RA RA Residential Agricultural | **Sq Ft:** 625 | **Valuation:** $58,985.00 | **Assigned To:**
Additional Info:
Number of Showers: 1 | **Number of Lavatories:** 2 | **Number of Water Closets:** 1 | **Reactivated:** No | **Plumber to Install Water & Sewer:** No
Standalone Plumbing Permit: No | **Subdivision:** | **Watershed:** GULF-GOLDSTON / DEEP RIVER | **Acres:** 3.45883 | **Power Co.:** CEMC
Description: PROPOSED 27'X20' MASTER SUITE ADDITION

PLMR-012883-2022 | **Type:** Plumbing (Residential) | **District:** Sanford | **Main Address:** 540 W Chisholm St
Status: Issued | **Workclass:** Other | **Project:** | **Parcel:** 9643-30-5109-00 | Sanford, NC 27330
Application Date: 01/25/2022 | **Issue Date:** 01/26/2022 | **Expiration:** 01/28/2023 | **Last Inspection:** 01/28/2022 | **Finaled Date:**
Zone: R-12 R-12 Residential Mixed | **Sq Ft:** 0 | **Valuation:** $0.00 | **Assigned To:**
Additional Info:
Contractor PIN #: 31056 | **Number of Bathtubs:** 0 | **Number of Lanundry Tubs:** 0 | **Number of Spa Tubs:** 0 | **Number of Full Baths:** 0
Number of Showers: 0 | **Number of Half Baths:** 0 | **Number of Lavatories:** 0 | **Manufactured Home Single-Wide:** 0 | **Number of Water Closets:** 0
Manufactured Home Double-Wide: 0 | **Number of Urinals:** 0 | **Manufactured Home Triple-Wide:** 0 | **Number of Catch Basins:** 0 | **Number of Dental Chairs:** 0
Number of Sewer Lines: 0 | **Number of Water Fountains:** 0 | **Number of Water Lines:** 0 | **Number of Water Heaters - Gas:** 0 | **Number of Water Heaters - Electric:** 0
Number of Water Softners: 0 | **Number of Kitchen Sinks:** 0 | **Number of Can Wash Sinks:** 0 | **Number of Water Tanks:** 0 | **Number of Feed Water Treatments:** 0
Number of Other Sinks: 0 | **Number of Bidets:** 0 | **Number of Washing Machines:** 0 | **Number of Interceptors:** 0 | **Number of Dishwashers:** 0
Number of Roof Leaders: 0 | **Number of Garbage Disposals:** 0 | **Number of Gas Pipings:** 0 | **Number of Grease Traps:** 0 | **Other:** 1
Number of Floor Drains: 0 | **Reactivated:** No | **Building Permit #:** | **Plumber to Install Water & Sewer:** No | **Standalone Plumbing Permit:** Yes
Subdivision: MCIVER PARK | **Acres:** 0.194247
Description: Replace sewer line from city ROW to house and install cleanouts.

PLMR-012886-2022 | **Type:** Plumbing (Residential) | **District:** Broadway | **Main Address:** 40 Green Acres Drive
Status: Issued | **Workclass:** New | **Project:** | **Parcel:** | Broadway 27505
Application Date: 01/25/2022 | **Issue Date:** 01/27/2022 | **Expiration:** 07/26/2022 | **Last Inspection:** | **Finaled Date:**
Zone: | **Sq Ft:** 0 | **Valuation:** $0.00 | **Assigned To:**
Additional Info:
Contractor PIN #: 32853 | **Number of Bathtubs:** 0 | **Number of Lanundry Tubs:** 0 | **Number of Spa Tubs:** 0 | **Number of Full Baths:** 2
Number of Showers: 0 | **Number of Half Baths:** 1 | **Number of Lavatories:** 0 | **Manufactured Home Single-Wide:** 0 | **Number of Water Closets:** 0
Manufactured Home Double-Wide: 0 | **Number of Urinals:** 0 | **Manufactured Home Triple-Wide:** 0 | **Number of Catch Basins:** 0 | **Number of Dental Chairs:** 0
Number of Sewer Lines: 0 | **Number of Water Fountains:** 0 | **Number of Water Lines:** 0 | **Number of Water Heaters - Gas:** 0 | **Number of Water Heaters - Electric:** 0
Number of Water Softners: 0 | **Number of Kitchen Sinks:** 0 | **Number of Can Wash Sinks:** 0 | **Number of Water Tanks:** 0 | **Number of Feed Water Treatments:** 0
Number of Other Sinks: 0 | **Number of Bidets:** 0 | **Number of Washing Machines:** 0 | **Number of Interceptors:** 0 | **Number of Dishwashers:** 0
Number of Roof Leaders: 0 | **Number of Garbage Disposals:** 0 | **Number of Gas Pipings:** 0 | **Number of Grease Traps:** 0 | **Other:** 0
Number of Floor Drains: 0 | **Reactivated:** No | **Building Permit #:** BRES-012720-2022 | **Plumber to Install Water & Sewer:** Yes | **Standalone Plumbing Permit:** No
Description: Full Bath-2
Half Bath-1

PLMR-012888-2022 **Type:** Plumbing (Residential) **District:** Sanford **Main Address:** 410 Arlington Cir
Status: Complete **Workclass:** Other **Project:** **Parcel:** 9632-77-4687-00 Sanford, NC 27330
Application Date: 01/26/2022 **Issue Date:** 01/27/2022 **Expiration:** 01/31/2023 **Last Inspection:** 01/31/2022 **Finaled Date:** 01/31/2022
Zone: R-20 R-20 **Sq Ft:** 0 **Valuation:** $0.00 **Assigned To:**
Additional Info:
Contractor PIN #: 31056 **Number of Bathtubs:** 0 **Number of Lanundry Tubs:** 0 **Number of Spa Tubs:** 0 **Number of Full Baths:** 0
Number of Showers: 0 **Number of Half Baths:** 0 **Number of Lavatories:** 0 **Manufactured Home Single-Wide:** 0 **Number of Water Closets:** 0
Manufactured Home Double-Wide: 0 **Number of Urinals:** 0 **Manufactured Home Triple-Wide:** 0 **Number of Catch Basins:** 0 **Number of Dental Chairs:** 0
Number of Sewer Lines: 0 **Number of Water Fountains:** 0 **Number of Water Lines:** 0 **Number of Water Heaters - Gas:** 0 **Number of Water Heaters - Electric:** 0
Number of Water Softners: 0 **Number of Kitchen Sinks:** 0 **Number of Can Wash Sinks:** 0 **Number of Water Tanks:** 0 **Number of Feed Water Treatments:** 0
Number of Other Sinks: 0 **Number of Bidets:** 0 **Number of Washing Machines:** 0 **Number of Interceptors:** 0 **Number of Dishwashers:** 0
Number of Roof Leaders: 0 **Number of Garbage Disposals:** 0 **Number of Gas Pipings:** 0 **Other:** 1 **Number of Floor Drains:** 0
Reactivated: No **Building Permit #:** **Plumber to Install Water & Sewer:** No **Standalone Plumbing Permit:** Yes **Subdivision:** BRENTWOOD
Acres: 0.70378
Description: New water service from meter to house

PLMR-012897-2022 **Type:** Plumbing (Residential) **District:** Lee County (Unincorporated) **Main Address:** 7183 Sheriff Watson Rd
Status: Issued **Workclass:** Addition **Project:** **Parcel:** 9557-05-1462-00 Sanford, NC 27332
Application Date: 01/26/2022 **Issue Date:** 01/26/2022 **Expiration:** 07/25/2022 **Last Inspection:** **Finaled Date:**
Zone: RA RA Residential Agricultural **Sq Ft:** 1,710 **Valuation:** $20,000.00 **Assigned To:**
Additional Info:
Number of Showers: 1 **Number of Washing Machines:** 1 **Reactivated:** No **Plumber to Install Water & Sewer:** No **Standalone Plumbing Permit:** No
Subdivision: BARRYWOOD **Acres:** 3.16463 **Power Co.:** CEMC
Description: 30' X 57' ADDITION ** WORK HAS BEEN STARTED ** FOOTINGS HAVE BEEN DUG & CONCRETE POURED

PLMR-012898-2022 **Type:** Plumbing (Residential) **District:** Broadway **Main Address:** 505 Hamlet Dr
Status: Issued **Workclass:** New **Project:** ACT II **Parcel:** 9682-52-3467-00 Broadway, NC 27505
Application Date: 01/26/2022 **Issue Date:** 01/26/2022 **Expiration:** 01/27/2023 **Last Inspection:** 01/27/2022 **Finaled Date:**
Zone: R-10/MH R-10/MH **Sq Ft:** 1,467 **Valuation:** $150,000.00 **Assigned To:**
Additional Info:
Number of Full Baths: 2 **Reactivated:** No **Building Permit #:** 10251 **Plumber to Install Water & Sewer:** Yes **Standalone Plumbing Permit:** No
Subdivision: ACT II **Acres:** 0.358094 **Power Co.:** DUKE
Description: PLUMBING OF NEW SFD - LOT 13 (2 FULL BATHS)

PLMR-012902-2022 **Type:** Plumbing (Residential) **District:** Lee County (Unincorporated) **Main Address:** 1974 Sherrif Watson Rd
Status: Issued **Workclass:** New **Project:** **Parcel:** Sanford NC 27
Application Date: 01/26/2022 **Issue Date:** 01/27/2022 **Expiration:** 07/26/2022 **Last Inspection:** **Finaled Date:**
Zone: **Sq Ft:** 0 **Valuation:** $0.00 **Assigned To:**
Additional Info:
Contractor PIN #: 34800 **Number of Bathtubs:** 0 **Number of Lanundry Tubs:** 0 **Number of Spa Tubs:** 0 **Number of Full Baths:** 2
Number of Showers: 0 **Number of Half Baths:** 0 **Number of Lavatories:** 0 **Manufactured Home Single-Wide:** 0 **Number of Water Closets:** 0
Manufactured Home Double-Wide: 0 **Number of Urinals:** 0 **Manufactured Home Triple-Wide:** 0 **Number of Catch Basins:** 0 **Number of Dental Chairs:** 0
Number of Sewer Lines: 0 **Number of Water Fountains:** 0 **Number of Water Lines:** 0 **Number of Water Heaters - Gas:** 0 **Number of Water Heaters - Electric:** 0
Number of Water Softners: 0 **Number of Kitchen Sinks:** 0 **Number of Can Wash Sinks:** 0 **Number of Water Tanks:** 0 **Number of Feed Water Treatments:** 0
Number of Other Sinks: 0 **Number of Bidets:** 0 **Number of Washing Machines:** 0 **Number of Interceptors:** 0 **Number of Dishwashers:** 0

Number of Roof Leaders: 0 **Number of Garbage Disposals:** 0 **Number of Gas Pipings:** 0 **Other:** 0 **Number of Floor Drains:** 0
Reactivated: No **Building Permit #:** BRES-012656-2022 **Plumber to Install Water & Sewer:** Yes **Standalone Plumbing Permit:** No
Description: NEW CONSTUCCION

PLMR-012903-2022 **Type:** Plumbing (Residential) **District:** Lee County (Unincorporated) **Main Address:** 2006 Sherrif Watson Road
Status: Issued **Workclass:** New **Project:** **Parcel:** Sanford nc 27
Application Date: 01/26/2022 **Issue Date:** 01/27/2022 **Expiration:** 07/26/2022 **Last Inspection:** **Finaled Date:**
Zone: **Sq Ft:** 0 **Valuation:** $0.00 **Assigned To:**
Additional Info:
Contractor PIN #: 34800 **Number of Bathtubs:** 0 **Number of Lanundry Tubs:** 0 **Number of Spa Tubs:** 0 **Number of Full Baths:** 2
Number of Showers: 0 **Number of Half Baths:** 1 **Number of Lavatories:** 0 **Manufactured Home Single-Wide:** 0 **Number of Water Closets:** 0
Manufactured Home Double-Wide: 0 **Number of Urinals:** 0 **Manufactured Home Triple-Wide:** 0 **Number of Catch Basins:** 0 **Number of Dental Chairs:** 0
Number of Sewer Lines: 0 **Number of Water Fountains:** 0 **Number of Water Lines:** 0 **Number of Water Heaters - Gas:** 0 **Number of Water Heaters - Electric:** 0
Number of Water Softners: 0 **Number of Kitchen Sinks:** 0 **Number of Can Wash Sinks:** 0 **Number of Water Tanks:** 0 **Number of Feed Water Treatments:** 0
Number of Other Sinks: 0 **Number of Bidets:** 0 **Number of Washing Machines:** 0 **Number of Interceptors:** 0 **Number of Dishwashers:** 0
Number of Roof Leaders: 0 **Number of Garbage Disposals:** 0 **Number of Gas Pipings:** 0 **Other:** 0 **Number of Floor Drains:** 0
Reactivated: No **Building Permit #:** BRES-012655-2022 **Plumber to Install Water & Sewer:** Yes **Standalone Plumbing Permit:** No
Description: new construction plumbing

PLMR-012911-2022 **Type:** Plumbing (Residential) **District:** Sanford **Main Address:** 1908 Holiday Rd
Status: Issued **Workclass:** New **Project:** **Parcel:** 9633-46-0284-00 Sanford, NC 27330
Application Date: 01/27/2022 **Issue Date:** 01/27/2022 **Expiration:** 01/28/2023 **Last Inspection:** 01/28/2022 **Finaled Date:**
Zone: R-20 R-20 **Sq Ft:** 4,846 **Valuation:** $425,000.00 **Assigned To:**
Additional Info:
Number of Full Baths: 6 **Reactivated:** No **Building Permit #:** 009785 **Plumber to Install Water & Sewer:** Yes **Standalone Plumbing Permit:** No
Subdivision: **Acres:** 1.1705 **Power Co.:** DUKE
Description: PLUMBING OF NEW SFD- (6 BATHS)

PLMR-012922-2022 **Type:** Plumbing (Residential) **District:** Lee County (Unincorporated) **Main Address:** 246 Saintsbury Pl
Status: Issued **Workclass:** New **Project:** BOCA ESTATES **Parcel:** 9519-78-1428-00 Sanford, NC 27330
Application Date: 01/28/2022 **Issue Date:** 01/28/2022 **Expiration:** 07/27/2022 **Last Inspection:** **Finaled Date:**
Zone: RA RA Residential Agricultural **Sq Ft:** 4,121 **Valuation:** $478,000.00 **Assigned To:**
Additional Info:
Number of Full Baths: 3 **Reactivated:** No **Plumber to Install Water & Sewer:** No **Standalone Plumbing Permit:** No **Subdivision:** BOCA ESTATES
Acres: 1.51654 **Power Co.:** DUKE
Description: NEW SFD LOT -10

PLMR-012923-2022 **Type:** Plumbing (Residential) **District:** Lee County (Unincorporated) **Main Address:** 3030 Henley Rd
Status: Issued **Workclass:** New **Project:** **Parcel:** 9611-82-3288-00 Sanford, NC 27330
Application Date: 01/28/2022 **Issue Date:** 01/28/2022 **Expiration:** 07/27/2022 **Last Inspection:** **Finaled Date:**
Zone: RA RA Residential Agricultural **Sq Ft:** 4,105 **Valuation:** $340,000.00 **Assigned To:**
Additional Info:
Number of Full Baths: 3 **Number of Half Baths:** 1 **Reactivated:** No **Plumber to Install Water & Sewer:** No **Standalone Plumbing Permit:** No
Subdivision: **Acres:** 12.92 **Power Co.:** DUKE

Description: NEW SFD - TRACT C
PER JEANETTE B. IN GIS, ADDRESS CHANGED TO 3030 FROM 3060 HENLEY RD. ON 4/19/2021. CG

PLMR-012929-2022 | **Type:** Plumbing (Residential) | **District:** Sanford | **Main Address:** 216 Register St
Status: Issued | **Workclass:** Alteration | **Project:** | **Parcel:** 9653-52-3441-00 | Sanford, NC 27330
Application Date: 01/31/2022 | **Issue Date:** 01/31/2022 | **Expiration:** 07/30/2022 | **Last Inspection:** | **Finaled Date:**
Zone: R-6 R-6 | **Sq Ft:** 0 | **Valuation:** $10,000.00 | **Assigned To:**
Additional Info:
Number of Bathtubs: 2 | **Number of Lanundry Tubs:** 1 | **Number of Showers:** 1 | **Number of Kitchen Sinks:** 1 | **Number of Washing Machines:** 1
Number of Dishwashers: 1 | **Number of Garbage Disposals:** 1 | **Reactivated:** No | **Plumber to Install Water & Sewer:** No | **Standalone Plumbing Permit:** No
Subdivision: HILLCREST | **Watershed:** CAPE FEAR / LEE COUNTY | **Acres:** 0.279188 | **Power Co.:** DUKE
Description: INTERIOR RENOVATIONS

PERMITS ISSUED FOR PLUMBING (RESIDENTIAL): 39

POOL

POOL-011601-2021 | **Type:** Pool | **District:** Lee County (Unincorporated) | **Main Address:** 1741 S Plank Rd
Status: Issued | **Workclass:** Residential | **Project:** | **Parcel:** 9602-53-5955-00 | Sanford, NC 27330
Application Date: 10/06/2021 | **Issue Date:** 01/05/2022 | **Expiration:** 07/04/2022 | **Last Inspection:** | **Finaled Date:**
Zone: RA RA Residential Agricultural | **Sq Ft:** 0 | **Valuation:** $0.00 | **Assigned To:**
Additional Info:
Number of Pools: 1 | **Number of Gallons:** 0 | **Pool Length:** 0 | **Pool Width:** 0 | **Pool Height:** 0
Pool Diameter: 0 | **Acres:** 16.0394 | **Power Co.:** CEMC | **Subdivision:**
Description: 16' X 40' SWIMMING POOL

PERMITS ISSUED FOR POOL: 1

SIGN

SIGN-012057-2021 | **Type:** Sign | **District:** Sanford ETJ | **Main Address:** 1821 Keller-Andrews Rd
Status: Issued | **Workclass:** Other | **Project:** | **Parcel:** 9631-69-7358-00 | Sanford, NC 27330
Application Date: 11/09/2021 | **Issue Date:** 01/31/2022 | **Expiration:** 07/30/2022 | **Last Inspection:** | **Finaled Date:**
Zone: R-12 R-12 Residential Mixed | **Sq Ft:** 0 | **Valuation:** $0.00 | **Assigned To:** Samantha Miller
Additional Info:
Awning: No | **Banner (Temporary):** No | **Billboard:** No | **Canopy:** No | **Construction:** No
Directory: No | **Free Standing Ground:** Yes | **Identification:** No | **Lighted:** Yes | **Monument:** No
Multiple Business: No | **Parapet:** No | **Permanent:** No | **Pylon:** No | **Temporary:** No
Wall: Yes | **Number of Signs:** 1 | **Surface Area (SQ.FT.):** 40 | **Tenant/Bldg Front (LN.FT.):** 60 | **Total Signage on Premises (SQ.FT.):** 2
Subdivision: | **Acres:** 2.11815 | **Power Co.:** DUKE
Description: UNITED REFRIGERATION SIGN PACKAGE. (1) INTERNALLY ILLUMINATED WALL SIGN AND (1) GROUND SIGN REFACE

PERMITS ISSUED BY TYPE (01/03/2022 TO 01/31/2022)

SIGN-012359-2021 | **Type:** Sign | **District:** Sanford | **Main Address:** 1135 Spring Ln
Status: Issued | **Workclass:** New | **Project:** | **Parcel:** 9633-92-8481-00 | Sanford, NC 27330
Application Date: 12/06/2021 | **Issue Date:** 01/12/2022 | **Expiration:** 07/11/2022 | **Last Inspection:** | **Finaled Date:**
Zone: C-2 C-2 General Commercial | **Sq Ft:** 0 | **Valuation:** $0.00 | **Assigned To:**
Additional Info:
Awning: No | **Banner (Temporary):** No | **Billboard:** No | **Canopy:** No | **Construction:** No
Directory: No | **Free Standing Ground:** No | **Identification:** No | **Lighted:** No | **Monument:** No
Multiple Business: No | **Parapet:** No | **Permanent:** No | **Pylon:** No | **Temporary:** No
Wall: Yes | **Number of Signs:** 1 | **Flood Zone:** AEFW, SHADED X, AE | **Subdivision:** | **Acres:** 0.94
Power Co.: DUKE
Description: 1 WALL MOUNTED SIGN

SIGN-012907-2022 | **Type:** Sign | **District:** Sanford | **Main Address:** 129 Chatham St
Status: Issued | **Workclass:** New | **Project:** | **Parcel:** 9643-70-5005-00 | Sanford, NC 27330
Application Date: 01/27/2022 | **Issue Date:** 01/31/2022 | **Expiration:** 07/30/2022 | **Last Inspection:** | **Finaled Date:**
Zone: CBD CBD Central Business | **Sq Ft:** 0 | **Valuation:** $0.00 | **Assigned To:**
Additional Info:
Awning: No | **Banner (Temporary):** No | **Billboard:** No | **Canopy:** No | **Construction:** No
Directory: No | **Free Standing Ground:** No | **Identification:** No | **Lighted:** No | **Monument:** No
Multiple Business: No | **Parapet:** No | **Permanent:** No | **Pylon:** No | **Temporary:** No
Wall: Yes | **Number of Signs:** 2 | **Surface Area (SQ.FT.):** 21.71 | **Tenant/Bldg Front (LN.FT.):** 22 | **Total Signage on Premises (SQ.FT.):** 2
Flood Zone: SHADED X, AE | **Historic District:** DOWNTOWN | **Subdivision:** | **Acres:** 0.0543635 | **Power Co.:** DUKE
Description: SIGN PERMIT FOR FBIS A BANKER INSURANCE COMPANY

PERMITS ISSUED FOR SIGN: 3

GRAND TOTAL OF PERMITS: 302

** Indicates active hold(s) on this permit*

Sanford/Lee County Zoning & Design Review Dept.

115 Chatham Street, Sanford, NC 27330 Phone 919-718-4656

SANFORD / LEE COUNTY / BROADWAY
TECHNICAL REVIEW COMMITTEE (TRC) MEMO

TO: SANFORD / LEE COUNTY / BROADWAY (TRC) MEMBERS

Sanford/Lee Co. Community Development Dept.: Marshall Downey, Director
Sanford/Lee Co. Community Development Dept.: David Montgomery, Long Range-Transportation Planner
Sanford/Lee Co. Zoning & Design Review Dept.: Thomas Mierisch, Planner1
Sanford/Lee Co. Zoning & Design Review Dept.: Amy J. McNeill, Zoning Administrator
Sanford/Lee County Building Inspections Dept.: Chris Riggins, Inspections Administrator
Sanford Public Works Dept. / Engineering Division: Mary DePina, Civil Engineer II
Sanford Public Works Dept. / Engineering Division: Fedd Walker, Public Works Manager
Sanford Fire Dept.: Wayne Barber, Chief & Ken Cotten, Deputy Chief / Fire Marshal
Sanford Police Dept.: Jamie Thomas, Assistant Police Chief
Lee County Office of Emergency Services: Kevin Smith, Deputy Fire Marshal
Lee County Strategic Services Dept.: Don Kovasckitz, GIS Administrator
Lee County Schools: Reid Cagle, Transportation Director & Dr. Andy Bryan, Lee Co. Schools Superintendent
NCDOT: Janet James, Assistant District Engineer, Division 8, District 2
CC: TRC "CC" Members, Project Managers/Designers

FROM: SANFORD/LEE COUNTY ZONING & DESIGN REVIEW DEPT.
DATE: 02.02.2022

RE: TRC agenda for February 24, 2021. There will be a **virtual meeting held** among staff and applicants via HD Meeting (Office Suite). Please send in all comments pertaining to these projects to me by **March 10, 2022** (thomas.mierisch@sanfordnc.net):

TRC-02-08-22
Modwash Car Wash at 2220 Jefferson Davis Hwy – Commercial Plan Review
LOCATION: 2220 Jefferson Davis Hwy (currently the Harbour Car Wash)
LEE CO. PIN NO.: 9631-55-0032-00
ZONING: C-2
ACRES: 1.02 +/-
DESCRIPTION: Proposed demolition and removal of the existing building to construct a new automated carwash facility.
UTILITIES: Existing access to public water and public sewer.
STREET(s): Existing access along both Cox Maddox Road, which is NCDOT-maintained.
JURISDICTION: Subject property is within the City of Sanford's corporate limits.
APPLICANT: Jan Pass | 423.800.5350 | jan.pass@stantec.com
PROJECT MANAGER: Josh Ligon | 423.521.0653 | jligon@hutton.build
PLANNER: Tanner O'Quin | 919.718.4656 ext. 5398 | tanner.oquin@sanfordnc.net

TRC-02-09-22
S. Moore Street Warehouse Development – Concept Plan Review
LOCATION: 315 & 318 S. Moore Street (intersection of S. Moore St. and E. Pearl St.)
LEE CO. PIN NO.: 9642-78-6913-00
ZONING: LI (Light Industrial)
ACRES: 3.0 +/-
DESCRIPTION: Proposed renovations to existing warehouse structures and additional construction of a new 10,000sf warehouse building with associated site improvements.

UTILITIES: Existing access to public water and public sewer along E. Pearl St.
STREET(s): Existing access along S. Moore St. / E. Pearl St.
JURISDICTION: Subject property is in the City of Sanford's corporate limits.
APPLICANT: Jeremy Thomas | 919.777.6010 | jthomas@jthomasengineering.com
PROJECT MANAGER: Travis Thompson | 919.851.1611 | tthompson@jmthompson.com
PLANNER: Tanner O'Quin | 919.718.4656 ext. 5398 | tanner.oquin@sanfordnc.net

TRC-02-10-22
Washington Avenue Subdivision – Major Subdivision Review
LOCATION: 2220 Jefferson Davis Hwy (currently the Harbour Car Wash)
LEE CO. PIN NO.: 9642-63-2855-00
ZONING: R-6
ACRES: 15.45+/-
DESCRIPTION: Proposed 44-lot single-family residential subdivision with city-maintained streets for the purposes of creating more affordable housing within Sanford.
UTILITIES: Existing access to public water along Washington Avenue and public sewer access from both Washington Avenue and Hooker Street to the north.
STREET(s): Existing access from Washington Avenue, the portion serving this site being NCDOT-maintained.
JURISDICTION: Subject property is within corporate limits of the City of Sanford.
APPLICANT: Kerry Bashaw | 919.775.2300 | kbashaw@bc-cdc.org
PROJECT MANAGER: Ken Bright | 919.356.46871.0653 | jligon@hutton.build
PLANNER: Thomas Mierisch | 919.718.4656 ext. 5396 | thomas.mierisch@sanfordnc.net

TRC-02-11-22
Tramway South Apartments – Conceptual Plan Review
LOCATION: 0 Marketplace Drive (near intersection of Tramway Road and Jefferson Davis Hwy, behind Bojangles and CVS)
LEE CO. PIN NO.: 9631-53-6433-00 and 9631-62-1820-00
ZONING: C-2 (General Commercial)
ACRES: 25.60 +/-
DESCRIPTION: Proposal to develop the subject property with a multi-family apartment home community, consisting of 12 apartment buildings, an amenity center, and a pool.
UTILITIES: Existing access to public water along Marketplace Drive, existing public sewer mains installed along Marketplace Drive, too
STREET(s): Existing access from Marketplace Drive, which is a privately-maintained street, and Pegg St. and Cheshire Dr, which are both NCDOT-maintained streets.
JURISDICTION: Subject property is within corporate limits of the City of Sanford.
APPLICANT: Jacob Hudson | 919.367.8790, ext. 110 | jacob@cegroupinc.com
PROJECT MANAGER: John Parker | 910.944.0881 | john@rhetson.com
PLANNER: Thomas Mierisch | 919.718.4656 ext. 5396 | thomas.mierisch@sanfordnc.net
Note: Subject property must be rezoned in order to be developed as proposed.

TRC-02-12-22
Marelli Subdivision – Major Subdivision Plan Review
LOCATION: 0 Broadway Road / NC 42 Hwy (near the intersection of Broadway Road and Rosser Road)
LEE CO. PIN NO.: 9652-84-7852-00 and 9652-97-1020-00
ZONING: R-6-C (Marelli Conditional Zoning District) [Rezoned in November, 2021]
ACRES: 116.4 +/-
DESCRIPTION: Proposed 356-lot residential major subdivision for single-family attached homes (townhomes).
UTILITIES: Existing access to public water along Broadway Road, existing public sewer main that bisects the property.
STREET(s): Existing access along Broadway Road / NC 42 Hwy.
JURISDICTION: Subject properties are within City of Sanford corporate limits.

APPLICANT: Beth Blackmon | 919.866.4509 | beth.blackmon@timmons.com
PROJECT MANAGER: Mark Lyczkowski | 919.842.0334 | mark@fig.llc
PLANNER: Thomas Mierisch | 919.718.4656 ext. 5396 | thomas.mierisch@sanfordnc.net

TRC-02-13-22
Autumnwood Subdivision – Conceptual Plan Review
LOCATION: 0 Cool Springs Road (intersection of Cool Springs Road and Valley Road)
LEE CO. PIN NO.: 9634-11-5000-00
ZONING: R-20 (Residential Single-Family)
ACRES: 146.51 +/-
DESCRIPTION: Completion of a previously-approved and partially-developed residential major subdivision for single-family homes. The last plat was recorded in 2010, and a previous request for preliminary plat approval extension was approved in 2020, and expired as of February 5, 2022.
UTILITIES: Existing access to public water along Valley Road and Cool Springs Road, and internal public streets, as well as public sewer that extends through the subject property.
STREET(s): Existing access along Cool Springs Road and Valley Road, which are NCDOT-maintained roads, as well as internal connections along Redwood Drive, Clovermist Court, and Roundrock Lane, which are city-maintained streets.
JURISDICTION: Subject properties are within City of Sanford corporate limits.
APPLICANT: Brad Haertling | 919.605.5562 | bhaertling@american-ea.com
PROJECT MANAGER: Brad Haertling | 919.605.5562 | bhaertling@american-ea.com
PLANNER: Thomas Mierisch | 919.718.4656 ext. 5396 | thomas.mierisch@sanfordnc.net

REPORT OF LIBRARY ACTIVITY
MONTH OF: JANUARY 2022
Respectfully submitted by: Beth List, Library Director
Report Date: Wednesday, February 9th, 2022

Useful Stats	DECEMBER 2020	DECEMBER 2021	JANUARY 2021	JANUARY 2022
Circulations:	4114	6361	5496	7106
Door Count:	793	2708	1047	Will update
Curbside Pick-Ups:	197	31	294	52
e-Inc Check Outs:	1917	2106	2082	2252
NC Kids Check Outs:	615	463	751	649
Website Views:	2665	2364	2825	2430
WiFi Use:	362	446	339	545

Other:
Facebook Followers: 1,779 Instagram Followers: 775 YouTube subscribers: 139

Programs & Community Outreach

- **Story Times:** Library story times were offered virtually for the month of January. Miss Sarah offered four Facebook live story times which were all uploaded to our YouTube channel. Themes included "Bubble Bath", "Citizen Science", "Astronauts", and "Let it Snow".
- **Banned Book Club:** 4 (4 adults-4 Virtual), 01/18/22, 6pm, online only The club met to talk about Alice in Wonderland by Lewis Carroll. February title is "American Psycho" by Bret Easton Ellis.
- **Artist in Residence:** January 2022 featured artist was Dexter Morrill. February 2022 artist is being set up now.
- **Outreach programs:** include delivery to 12 county organizations receiving a selection of either rotating library books or donations from our collection. We currently have 10 residents participating in our homebound delivery program. Outreach story times and programs were suspended for the month of January.
- **Online Programming:** Our YouTube channel had 374 views in January 2022.
    - "Bundle Up" Online Story Time posted 1/21 at 10 AM
    - STEAM Club—Unboxing Our Citizen Science Kits posted 1/20 at 10 AM
        - Miss Sarah explored the Citizen Science Kits showing viewers what each contains and the corresponding activities.
    - History Club—Chinese New Year posted 1/27 at 10 AM
        - Theme was "Chinese New Year" and featured the guest speaker Tom Martineau, the director of Chinese Programs at Go Global NC.
    - Getting Crafty for Adults and Teens posted 1/28
        - We made tile hot plates. Perfect for that hot bowl of soup this winter!8

* *Website: http://library.leecountync.gov*
* *Facebook: http://facebook.com/LeeCountyLibrarySanfordNC*
* *Youtube: Lee County Libraries NC*
* *Instagram: @leecountylibrariesnc*

Patron Services & NC Cardinal

- NC Cardinal established a contract with FedEx and resource sharing has resumed. Currently we are receiving shipments every day with our ship-out dates as Tuesdays and Thursdays.
- Public access hours are Monday/Wednesday/Friday from 9 AM – 5 PM, Tuesday/Thursday from 9 AM – 8 PM, and Saturdays from 12 PM – 4 PM.
- Curbside Pick-up Service is offered whenever the library is open.
- "Print from home" is available to patrons through our website. Free WiFi through the library or through WiFi offered through our Park and Learn Grant with NC Student Connect is available 24/7 in our parking lots.
- Book drops are open 24/7. The main library book drop is emptied daily.
- Currently the Broadway branch remains closed; we continue to monitor the book drop and pull holds from the collection.
- We were closed three days during the month for inclement weather.

Collections

- Top circulating location for January 2022 was Adult Fiction. The next top 3 locations were: Easy Books (picture books); Adult Large Print Fiction; and Adult Non-Fiction.
- New materials are finally coming in after a lull in shipping. New shelves are full and our request for acquisitions are being fulfilled.
- Staff performed diversity audit of adult romance collection.
- Citizen Science Scistarter kits are available and circulating to patrons.
- Sanford Herald Microfilming project for 2021 is completed.

Personnel, Meetings & Training

- We welcome Carla Lemus as our new Library Assistant I effective 1/18/22.
- Amanda Hinds resigned her position as Library Assistant I effective 12/29/21.
- We welcome Elaine Wilderson and Catherin Hildreth to our part-time Library Assistant staff. Both will begin in February.
- Brittany Newman, Beth List, Allison Sills and Jeremy Mullins attended a webinar on Library Violence Prevention and De-Escalation.
- Brittany Newman attended the webinars: "Crafting Your Story with Data Visualizations Tools You Can Use"; "Friends and Foundations Working Effectively with the Library".
- Sarah attended ReadSquared Trainings; Leap into Science Trainings; NC SciFest Partner Meeting: Science for All; Sci Starter Collaboration Meeting.
- Beth List and Brittany Newman attended the webinar: "Introducing: Strategic Planning for Public Libraries".
- Sarah Wall, Delisa Williams and Brittany Newman attended the webinars: "Creating Interactive Story Times with Music, Play & More" and "If You Have Emotions and You Know it Shout Hooray: Presenting Social Emotional Learning in Storytime".

- Delisa Williams and Brittany Newman attended the webinar: "Collaborative Literacy Learning Services- Creating Self Led Foundation Literacy Kits for Children".
- Delisa Williams attended an 8-part webinar on Library Outreach.
- Staff continues to work on Northstar Academy assessments for computer skills, and learning about the various resources offered through NCLive. Staff is required to learn/practice/test in various computer skills and library resources and submit successful completion to admin. for their professional development files.

Library Space & Safety Improvements

- Work will begin at the Broadway Library to reopen in April 2022. The collection will be cleaned up, the floor will be rearranged, and the entire interior will be painted.
- Delisa, Laura, and Sarah created some wonderful displays in January. They included: Martin Luther King Jr. Day; 2021 YA Title Goodreads Winners; Snowmen in the Children's Department; and our three barrel displays (New Years Resolution; Winter Thrillers; and Citizen Science).

Important Dates to remember:

- *Next Board Meeting is tentatively scheduled for Wednesday, March 9th, 2022 at 5:30PM*

Memo

To: John Crumpton, County Manager

From: Michael Brown, Tax Administrator

Date: February 2, 2022

Re: Monthly Forced Collection Efforts report for January 2022

January 2022	
Accounts researched	1,004
Accounts Updated with Collection info	327
January **total** collections (all)	$ 7,505,952.40
January collections for **county only** (G01)	$ 4,692,544.24
Debt Setoff Updated	2,221 bills totaling $912,381.24
Funds Received from Debt Setoff	$ 0.00
Garnishments/Attachments Issued	219
Employee List Requested	7
Employee List Entered	5

P.O. Box 1968 | 106 Hillcrest Dr. | Sanford, NC 27330 | (919) 718-4662

Parks and Recreation Advisory Committee

Meeting Agenda

Location: Bob Hales Center 147 McIver Street, Sanford NC 27330

Time: 5:30pm

Date: January 24th, 2022

I. MEETING CALLED TO ORDER

II. AGENDA ADJUSTMENTS / APPROVAL OF AGENDA

III. CONSENT

a) **Meeting Minutes November 29th, 2021**

IV. PUBLIC COMMENT

V. OLD BUSINESS

a) **Basketball update**

VI. NEW BUSINESS

a) **Introduction to Kacey Blackmon**
b) **Request from Brush and Palette Club**
c) **Request from Family, Youth and Sports Programs**

VII. Additional Comments

VIII. Adjournment

.