Lehi City Council Meeting
Agenda
July 22, 2025

4:45 PM - Lehi City Council Chambers (153 N. 100 E., Lehi, Utah)

<u>Tour- Dry Creek Lake, 4:45 p.m.</u>

Pre-Council, 5:30 p.m.

1. Welcome and Opening Comment

2. Presentations and Reports

   2.1. Presentation and Discussion of Pressurized Irrigation Water Rates- Finance Department

   2.2. Presentation of Financial Impact Analysis- Thanksgiving Point

   2.3. Discussion of the Draft SHAR Overlay Ordinance- Planning Department
   SHAR Proposal 07.16.25 - To City Council.docx

3. Agenda Questions
   The Mayor and City Council discuss and ask questions on items on the Regular Session agenda.

4. Administrative Report

5. Mayor and Council Reports
   Calendar items and outside Committee reports

Regular Session, 7:00 p.m.

1. Welcome, Roll Call, Pledge of Allegiance

2. Presentations and Reports

   2.1. Water Wise Yard of the Month Presentation

3. 20 Minute Citizen Input
   (for public comments on items not listed on the agenda. Comments limited to 3 minutes per person with a time limit not to exceed 20 minutes for this item.)

4. Consent Agenda

4.1. Approve Purchase Orders
PO Index.docx
Wheeler Machine PO.pdf
Stuart C Irby Co-$315859.89.pdf

Regular Agenda

5. Consideration of Ordinance #44-2025 adopting Title 6 Chapter 5 Section 8, Bridge Safety. - *This item has been pulled from the agenda.*
Petitioner: Lehi City

6. Consideration of a Grading Permit approval for the Upper Inverness Grading Permit on 693.4 acres.
Petitioner: DR Horton
CC Staff Report Upper Inverness Grading 07.22.25.docx
Upper Inverness Grading Permit DRC 06.11.25.docx
Upper Inverness Grading Permit.pdf

7. Consideration of Resolution #2025-49 approving a Construction Agreement with Rino Excavation for the construction of the Lambert Basin Strom Drain.
Petitioner: Lehi City
Res 2025-49.docx
Agreement (Owner & Contractor) - Rino Excavating LLC.pdf

8. Consideration of Resolution # 2025-50 approving a Master Agreement with UDOT for the construction of water, sewer, irrigation, and storm drain improvement as part of the 2100 N Project.
Petitioner: Lehi City
Res 2025-50.docx
13420_UTIL_LehiCityWater_IR_Master_Agreement_20250715-from UDOT for Council.pdf

9. Consideration of Resolution #2025-51 approving a Supplemental Agreement with UDOT for water, sewer, irrigation, and storm drain improvements related to the 2100 N Project.
Petitioner: Lehi City
Res 2025-51.docx
13420_UTIL_LehiCityWater_IR_Agreement-from UDOT for Council.pdf

10. Consideration of Resolution #2025-53 approving and Agreement with UDOT for the construction of an asphalt trail connection through Holbrook Part 2 from the Jordan River pedestrian bridge to Waterbury Drive.
Petitioner: Lehi City

Res 2025-53.docx
13420_Lehi City_Holbrook Trail Betterment_Agreement-from UDOT for Council.pdf

11. Consideration of Resolution #2025-54 approving an agreement with UDOT for the construction of an access road connection from 2100 North and Thanksgiving Way to the park and ride lot.
    Petitioner: Lehi City
    Res 2025-54.docx
    13420_Lehi City_ParkandRide_Agreement-from UDOT for Council.pdf

12. Consideration of Resolution #2025-52 appointing a Member to the Board of Trustees of the Metropolitan Water District of Lehi.
    Petitioner: Lehi City
    Res 2025-52.docx

13. Consideration of Resolution #2025-55 approving the American Fork-Dry Creek Watershed Agreement with the Natural Resources Conservation Service, U.S. Department of Agriculture.
    Petitioner: Lehi City
    Res 2025-55.docx
    AF-Dry Creek Watershed Agreement Clean Copy.pdf

14. Consideration of holding a Closed Meeting to discuss pending or reasonably imminent litigation.

15. Adjournment

- Public is invited to attend all City Council Meetings
- In compliance with the Americans with Disabilities Act, persons in need of special accommodations should contact the City Recorder at 385-201-2269
- This agenda has been properly posted and a copy provided to the local news media.

Agenda Item No: 2.1

City Council Agenda Item Report

Meeting Date: July 22, 2025
Submitted By: Teisha WIlson
Submitting Department:
Item Type: Presentation
Agenda Section: Presentations and Reports

Subject:
Presentation and Discussion of Pressurized Irrigation Water Rates- Finance Department

Suggested Action:

Attachments:

Agenda Item No: 2.2

City Council Agenda Item Report

Meeting Date: July 22, 2025
Submitted By: Teisha WIlson
Submitting Department:
Item Type: Presentation
Agenda Section: Presentations and Reports

Subject:
Presentation of Financial Impact Analysis- Thanksgiving Point

Suggested Action:

Attachments:

Agenda Item No: 2.3

City Council Agenda Item Report

Meeting Date: July 22, 2025
Submitted By: Teisha WIlson
Submitting Department:
Item Type: Presentation
Agenda Section: Presentations and Reports

Subject:
Discussion of the Draft SHAR Overlay Ordinance- Planning Department

Suggested Action:

Attachments:

SHAR Proposal 07.16.25 - To City Council.docx

Chapter 5-A

Starter Home Attainable Residential (SHAR)

Section 5A.010. Purpose and Definitions.

Section 5A.020. Applicability and Extra Density.

Section 5A.030. Attainability Requirements and Potential Reductions.

Section 5A.040. Process for Approval.

Section 5A.010 Purpose and Definitions.

Housing has become increasingly unaffordable for Lehi residents and those who would like to live in Lehi. The purpose of this chapter is to provide a zoning tool to help lower the cost of housing through smaller homes on small lots. The intention of SHAR Developments is to add smaller lots and homes intermixed into existing neighborhoods, providing for a mixture of housing types, life cycle housing, and affordability. The SHAR primarily focuses on first time home buyers or moderate-income households. However, SHAR can benefit a much larger demographic and fill many needs in the community.

1. Below are definitions applicable to Chapter 5A
    a) **SHAR Development**- the overall subdivision including standard and attainable units.
    b) **Standard Units**- the units allowed based on the current zoning.
    c) **Attainable Units**- all the extra units from the 50 percent density bonus, and any additional units the applicant chooses to designate as attainable from those allowed as standard units.

Section 5A.020 Applicability and Extra Density.

Any residential subdivision can apply and qualify for SHAR. There is no minimum or maximum acreage or number of units to qualify for SHAR.

The maximum number of units for a SHAR development will be the number of units per acre allowed in the existing zoning district multiplied by the project acreage (this number represents the standard units) and then multiplied by one and a half (1.5). The number will then be rounded up to the nearest whole number, and be used as the maximum number of units allowed within the SHAR Development.

The standard units shall be designed to meet requirements of the existing zone district, but will be allowed flexibility with the minimum lot size, width, and depth requirements.

Section 5A.030 Attainability Requirements and Potential Reductions.

All attainable units shall meet the following requirements:

1. Be detached single family homes.
2. Lot size shall be less than 6,000 square feet.
3. Homes shall be a maximum of 1,200 square feet of finished floor area if they do not include a basement; and a maximum of 1,000 square feet of finished floor area if they include an unfinished basement.
4. Lots shall have a minimum frontage of 50-feet.
5. The minimum setbacks for the lots shall be as follows:
    a. 5-foot minimum side yard setback on one side and a 12-foot minimum setback on the other side if there is no carport or garage. This 12-foot minimum setback is required to allow for a carport or garage to be added in the future and to provide adequate space for a vehicle to park off street.
    b. 5-foot minimum side yard setback on each side of the home if the home does contain a carport or garage.
    c. 20-foot side yard setback on corner lots
    d. 20-foot front yard setback
    e. 20-foot rear yard setback with the initial build. After 2 years the rear

yard setback will be reduced to 15 feet for any additions to the home.

f. The Reviewing Departments and City Council may consider alternative side yard setbacks, including up to a zero-lot line side yard setback.

a. The goal is to provide a home to first time homebuyers or moderate-income households for a maximum price of $400,000. However, the City Council may approve an alternative maximum price range based upon current housing, economic or other justifiable circumstances and that still meets the goal of attainable home ownership for first-time home buyers or moderate-income households.

b. SHAR homes shall be of a similar design and exterior materials as the other homes in the subdivision.

c. SHAR homes shall be deed restricted in perpetuity to require owner occupancy to prevent them from becoming investment properties.

d. To promote affordability garages are discouraged as part of the initial construction but can be built if the homes still meet the price requirements outlined in 5A.030.f. If the proposal does not include a garage, the applicant shall show how a garage could be added on the lot later.

1. The City may grant the following reductions as part of the SHAR approval process.
    a. A reduced public right of way on new streets at the discretion of the Engineering Department. The minimum right of way shall be 44 feet and include:
        i. 30-feet of asphalt.
        ii. 5-foot sidewalks, integral with the curb and gutter.
        iii. Rolled curb and gutters.
        iv. A 15-foot Public Utility Easement (PUE) behind the sidewalk.

Section 5A.040 Process for Approval.

1. Applicants shall submit a concept plan for review. The concept plan shall include:
    a. The proposed layout of the subdivision including lot sizes and widths.
    b. The dimensions for the public right of way.
    c. Building elevations (or conceptual elevations such as images of similar homes) for both the standard and attainable units and other units.
    d. The proposed sales price for the attainable units, including justification for the price if the proposed sales price is greater than $400,000.
2. The concept plan will be reviewed by the Reviewing Departments to ensure it meets all applicable Code requirements, and adequate utility capacity exists (including power, roadways, sewer, culinary and pressured irrigation). Following review by the Reviewing Departments, it will be scheduled for a City Council meeting. The City Council may either approve, approve with conditions, or deny the proposed concept. If approved, they will direct Staff to write a Development Agreement that identifies the terms and requirements for the SHAR development. The Concept and Development Agreement will be reviewed by the the Reviewing Departments, and will then be scheduled for review and recommendation by the Planning Commission with a public hearing City Council will provide final approval.
3. Approval for the preliminary and final subdivision can be combined and approved by the Reviewing Departments as long as all of the requirements of this Code and the Development Agreement are met.

Agenda Item No: 2.1

City Council Agenda Item Report

Meeting Date: July 22, 2025
Submitted By: Teisha WIlson
Submitting Department:
Item Type: Presentation
Agenda Section: Presentations and Reports

Subject:
Water Wise Yard of the Month Presentation

Suggested Action:

Attachments:

Agenda Item No: 4.1

City Council Agenda Item Report

Meeting Date: July 22, 2025
Submitted By: Teisha WIlson
Submitting Department:
Item Type: Action Item
Agenda Section: Consent Agenda

Subject:
Approve Purchase Orders

Suggested Action:

Attachments:

PO Index.docx

Wheeler Machine PO.pdf

Stuart C Irby Co-$315859.89.pdf

LEHI CITY
CITY COUNCIL AGENDA
July 22, 2025

Consent Agenda: Approval of Purchase Orders

INFORMATION:

Company	Description	P O Amount	Budget Balance (before PO)
Wheeler	CAT 938 Wheel Loader	$231,742.00	
Stuart C. Irby Co.	Power Department Materials	$315,859.89	Inventory

Lehi City Purchase Requisition Request

Supplier	**Name**	Wheeler		**Vendor#**	
	Street	4901West 2100 South		**Date**	**7/17/2025**
	City	Salt Lake City	**State**	Utah	
	Zip	84120	**Phone**	435-251-8415	

Dean Lundell

Fleet	64-40-53	Jeremy Estes
Requesting Department	**Dept. Account No.**	**Department Head Signature**

Quanity	Unit	Materials and Description	Price	Total
		CAT 938 Wheel Loader		$231,742.00
		Total		$231,742.00

Justification:	Price Determination	
State Contract #MA3383	Verbal Quote	
	Informal Bid	
	Written Bid	$231,742.00
	State Bid	
	Other	

148890-02

March 14, 2025

LEHI CITY CORPORATION

153 N 100 E
LEHI, UT84043

Attention: Todd King

Machine pictured may not reflect specifications quoted.

Todd King,

Thank you for this opportunity to quote Caterpillar products for your business needs. We are pleased to quote the following for your purchase consideration.

One (1) New Caterpillar Model: 938 QC Wheel Loaders with all standard equipment in addition to the additional specifications listed below:

STOCK NUMBER: BCP03502 **SERIAL NUMBER:** 0EZY01658 **YEAR:** 2025 **SMU:** 5

Thank you for your interest in Wheeler Machinery and Caterpillar products for your business needs. This quotation is valid for 30 days, after which time we reserve the right to re-quote. If there are any questions, please do not hesitate to contact me.

Sincerely,

Trevor Shuman
Machine Sales Representative
tshuman@wheelercat.com
801-209-1882

One (1) New Caterpillar Model: 938 QC Wheel Loaders with all standard equipment in addition to the additional specifications listed below:

STANDARD EQUIPMENT
MACHINE SPECIFICATIONS

938 14A WHEEL LOADER	579-7703	MIRRORS, HEAT, ELEC ADJUST	578-1409
CHASSIS AR-938	579-7707	SEAT, DELUXE, TILT AND TELE	593-8962
ELECTRICAL AR	579-7708	LIGHTS, STD, HALOGEN	590-8902
HYDRAULIC AR	579-7712	LIGHTS, ROADING, HALOGEN, RH	633-0624
POWER TRAIN AR	593-8992	STANDARD RADIO (12V)	590-8872
INSTALLATION AR	593-8999	PRODUCT LINK, CELLULAR PLE643	573-8455
ELECTRONICS AR-M	595-9693	FILM GP, WARNING, PL, ANSI	638-5475
LANE 2 ORDER	0P-9002	WINDSHIELD ACCESS STEPS, NONE	612-1012
PREP PACK, UNITED STATES	593-8900	TIRES,20.5R25 MX XHA2 * L3	366-6882
STANDARD LIFT, COUPLER READY	593-8941	FENDERS, STANDARD	593-8951
HYDRAULICS, 2V	593-8942	CTWT, STD,3064LBS, 5PCS	470-6570
HYDRAULICS, STANDARD	536-5284	TOOLBOX AUX, NONE	519-8081
STEERING WHEEL, STANDARD	579-7718	HYDRAULIC OIL, STANDARD	619-8439
JOYSTICK 2V, STEERING WHEEL	593-8915	SERIALIZED TECHNICAL MEDIA KIT	421-8926
DIFFERENTIAL, OPEN REAR	349-8014	LINES, AUX 3RD, NONE	536-5329
ENVIRONMENT, MEDIUM DEBRIS	579-7722	RIDE CONTROL	579-7697
WEATHER, COLD START 120V	579-7731	GUARD, POWERTRAIN, LOWER	349-8165
CAB, STANDARD	578-1363	PACK, DOMESTIC TRUCK	0P-0210
AIR CONDITIONING, R134A REF	579-7735	QUICK COUPLER,FUSION,HIGH VIS	536-5314
ENGINE	593-8993	JUMPER LINES, NONE	536-5339
PUSH START, PASSCODE SECURITY	579-7738	GENERAL PURPOSE BUCKET - BCP03502B	417-4929
CAMERA, REAR VIEW	579-7761		

SELL PRICE	$380,146.00
STATE CONTRACT MA3383 DISCOUNT	**($148,404.00)**
AFTER DISCOUNT BALANCE	**$231,742.00**

WARRANTY & COVERAGE

Standard Warranty: 12 Months / Unlimited Hours - Premier

Extended Warranty: 48 months 2000 hrs PT&HYD&Tech

F.O.B/TERMS:
Lehi City

PAYMENT TERMS
Lease Terms

BALANCE TO LEASE	**TERM**	PERIOD **PAYMENT**	**RATE**	**BUY-OUT**	**DOCUMENT FEE**
$232,142.00	(4 Annual)	$51,518.89	5.49%	$51,518.89	$400.00

The above lease is based on the following:

- If the machine is not purchased at the end, then it must be returned in average condition with normal wear-and-tear
- The customer is responsible for all maintenance and repairs on the machine using genuine Cat parts only
- Tires, undercarriage, and all ground engaging tools (i.e. teeth, cutting edges) must be at 50% remaining, minimum, if the unit is not purchased at the end of the lease
- The above is subject to approval by Caterpillar Finance

BUYBACK OPTION:

Wheeler Machinery will purchase back this quoted loader after 2 years for $227,742 Machine must have 600 hours or less, no damage, all wearables must be at 50% or greater, and all maintenance must be performed per OMM. Over hours billed at $50 per hour. Subject to availability. Subject to agreement by participating parties. Subject to purchase of new Cat Loader.

Lehi City Purchase Requisition Request

Supplier	**Name**	STUART C. IRBY CO.	**Vender #**	
	Street	PO BOX 843959	**Date**	**9/17/2024**
	City	DALLAS	**State**	TX
	Zip	75284	**Phone**	801-724-3000

Dean Lundell

POWER	53-14-15	
Requesting Department	**Dept. Account No.**	**Department Head Signature**

Quanity	Unit	Materials and Description	Price	Total
45,598		OKON 162-23-3081 4/0-19X AL F/S 220M EPR	$4.68	$213,398.64
		15KV 11X14 2750'(+/-)		
		IN STOCK IN SALT LAKE CITY,UTAH		
23,025		OKON 162-23-3072 1/0-19X AL F/S 220M EPR	$4.45	$102,461.25
		15KV 11X14 2500' (+/-)		
		IN STOCK IN SALT LAKE CITY,UTAH		
		UPCOMING PROJECTS FOR POWER DEPT.		
		ALTA VISTA APPARTMENTS,BEACON POINT		
		INNOVATION PARK PH-2,SKYE PLAT 4,		
		LEHI UTAH TEMPLE,STAKE CENTER		
		SKYE HORTON WAY,INVERNESS PLAT6,		
		SKYE PLAT 3,SMITHS MARKETPLACE,SILICON		
		SLOPES MEDICAL BLDG,RIVER POINT PHASE 6		
		WILLOW PARK CHURCH,WILLOW PARK CHURCH		
		LOT 3,INVERNESS 4 APARTMENTS		
		EXCHANGE OFFICE BLDG		
				$315,859.89

Justification:	Price Determination	
SEE ATT. LETTER	Verbal Quote	
	Informal Bid	
	Written Bid	*
	State Bid	
	Other	

Quotation

irby
A Sonepar Company

STUART C IRBY BR1223
16245 NORCO WAY
SUITE 102
NAMPA ID 83687

QUOTE DATE	ORDER NUMBER
07/17/25	S014320023

REMIT TO:	PAGE NO.
STUART C. IRBY CO. POST OFFICE BOX 843959 DALLAS TX 75284	1

SOLD TO:
LEHI CITY CORP
153 NO 100 EAST
LEHI, UT 84043

SHIP TO:
LEHI CITY CORP
560 WEST GLENN CARTER DRIVE
LEHI, UT 84043
801-768-7100

ORDERED BY: KENNY

CUSTOMER NUMBER	CUSTOMER ORDER NUMBER	JOB/RELEASE NUMBER	OUTSIDE SALESPERSON
222013	1/0 AND 4/0		Gregory J McPhie

INSIDE SALESPERSON		REQD DATE	FRGHT ALLWD	SHIP VIA
JOSEPH C RHO		07/17/25	Yes	OT OUR TRUCK

ORDER QTY	SHIP QTY	LINE	DESCRIPTION	Prc/Uom	Ext.Amt
			********* Shipping Instructions **********		
			* SCOTT PECK 801-494-9684 *		
			* KENNY 385-201-2612 OFC *		
			* 801-655-3042 MBL *		
			**********		
2551FT		1	OKON 163-23-3072 1/0-19X AL F/S 220M EPR 15KV 16X14 2500' (+/-)	4450.000M	11351.95
2551FT		2	OKON 163-23-3072 1/0-19X AL F/S 220M EPR 15KV 16X14 2500' (+/-)	4450.000M	11351.95
2551FT		3	OKON 163-23-3072 1/0-19X AL F/S 220M EPR 15KV 16X14 2500' (+/-)	4450.000M	11351.95
2551FT		4	OKON 163-23-3072 1/0-19X AL F/S 220M EPR 15KV 16X14 2500' (+/-)	4450.000M	11351.95
2553FT		5	OKON 163-23-3072 1/0-19X AL F/S 220M EPR 15KV 16X14 2500' (+/-)	4450.000M	11360.85
2553FT		6	OKON 163-23-3072 1/0-19X AL F/S 220M EPR 15KV 16X14 2500' (+/-)	4450.000M	11360.85
2553FT		7	OKON 163-23-3072 1/0-19X AL F/S 220M EPR 15KV 16X14 2500' (+/-)	4450.000M	11360.85
2553FT		8	OKON 163-23-3072 1/0-19X AL F/S 220M EPR 15KV 16X14 2500' (+/-)	4450.000M	11360.85
2609FT		9	OKON 163-23-3072 1/0-19X AL F/S 220M EPR 15KV 16X14 2500' (+/-)	4450.000M	11610.05
2585FT		10	OKON 162-23-3081 4/0-19X AL F/S 220M EPR 15KV 11X14 2500' (+/-)	4680.000M	12097.80
2585FT		11	OKON 162-23-3081 4/0-19X AL F/S 220M EPR 15KV 11X14 2500' (+/-)	4680.000M	12097.80
2585FT		12	OKON 162-23-3081 4/0-19X AL F/S 220M EPR 15KV 11X14 2500' (+/-)	4680.000M	12097.80
*** Continued	on		Next Page ***		

** Reprint ** Reprint ** Reprint **

Quotation

STUART C IRBY BR1223
16245 NORCO WAY
SUITE 102
NAMPA ID 83687

QUOTE DATE	ORDER NUMBER
07/17/25	S014320023

REMIT TO:	PAGE NO.
STUART C. IRBY CO. POST OFFICE BOX 843959 DALLAS TX 75284	2

SOLD TO:
LEHI CITY CORP
153 NO 100 EAST
LEHI, UT 84043

SHIP TO:
LEHI CITY CORP
560 WEST GLENN CARTER DRIVE
LEHI, UT 84043
801-768-7100

ORDERED BY: KENNY

CUSTOMER NUMBER	CUSTOMER ORDER NUMBER	JOB/RELEASE NUMBER	OUTSIDE SALESPERSON
222013	1/0 AND 4/0		Gregory J McPhie

INSIDE SALESPERSON		REQD DATE	FRGHT ALLWD	SHIP VIA
JOSEPH C RHO		07/17/25	Yes	OT OUR TRUCK

ORDER QTY	SHIP QTY	LINE	DESCRIPTION	Prc/Uom	Ext.Amt
2612FT		13	OKON 162-23-3081 4/0-19X AL F/S 220M EPR 15KV 11X14 2500' (+/-)	4680.000M	12224.16
2505FT		14	OKON 162-23-3081 4/0-19X AL F/S 220M EPR 15KV 11X14 2500' (+/-)	4680.000M	11723.40
2582FT		15	OKON 162-23-3081 4/0-19X AL F/S 220M EPR 15KV 11X14 2500' (+/-)	4680.000M	12083.76
2500FT		16	OKON 162-23-3081 4/0-19X AL F/S 220M EPR 15KV 11X14 2500' (+/-)	4680.000M	11700.00
2500FT		17	OKON 162-23-3081 4/0-19X AL F/S 220M EPR 15KV 11X14 2500' (+/-)	4680.000M	11700.00
2500FT		18	OKON 162-23-3081 4/0-19X AL F/S 220M EPR 15KV 11X14 2500' (+/-)	4680.000M	11700.00

*** This is a quotation ***

Prices firm for acceptance within 30 days with the exception of commodity prices which are subject to change daily. Quotation is void if changed. Complete quote must be used unless authorized in writing.

All transactions are subject to and exclusively governed by our Terms and Conditions of Sale, which are incorporated herein and available at: https://www.irbyutilities.com/terms. Additional or conflicting terms are rejected, void, and of no force or effect.

Subtotal	209885.97
S&H CHGS	0.00
Sales Tax	0.00
TOTAL	209885.97

** Reprint ** Reprint ** Reprint **

Quotation

irby
A Sonepar Company

STUART C IRBY BR1223
16245 NORCO WAY
SUITE 102
NAMPA ID 83687

QUOTE DATE	ORDER NUMBER
07/17/25	S014320023

REMIT TO:	PAGE NO.
STUART C. IRBY CO. POST OFFICE BOX 843959 DALLAS TX 75284	3

SOLD TO:
LEHI CITY CORP
153 NO 100 EAST
LEHI, UT 84043

SHIP TO:
LEHI CITY CORP
560 WEST GLENN CARTER DRIVE
LEHI, UT 84043
801-768-7100

ORDERED BY: KENNY

CUSTOMER NUMBER	CUSTOMER ORDER NUMBER	JOB/RELEASE NUMBER	OUTSIDE SALESPERSON
222013	1/0 AND 4/0		Gregory J McPhie

INSIDE SALESPERSON		REQD DATE	FRGHT ALLWD	SHIP VIA
JOSEPH C RHO		07/17/25	Yes	OT OUR TRUCK

Terms and Conditions of Sale for Quotes
A. Seller assumes no responsibility whatsoever for any interpretation of bid documents, plans, or specifications provided to Seller (i.e., customer shall be solely responsible for ensuring interpretation of such documents, plans and/or specifications and for conformity and appropriateness of all goods and services ordered in comparison to same).
B. Prices are subject to change at any time prior to shipment unless otherwise agreed in writing signed by an authorized Seller representative.
C. Pricing and estimated delivery dates are based solely on the quantities and specific products and/or scope of services identified in this quote. Seller may refuse, terminate, or change pricing, estimated dates, and other terms of its offer if customer requests changes or deviations from the original quote. Unless an authorized Seller representative accepts customer's proposed deviations in an explicit signed agreement modifying this quotation, any such proposed deviations are automatically rejected, void, and of no force or effect.
D. Quotation does not include special mounting or installation hardware, equipment options, accessories, samples, spares, or mock-up equipment unless otherwise noted.
E. Seller is not responsible for the design of the project or any goods supplied.
F. Seller reserves the right to increase the pricing quoted herein to account for force majeure events, the imposition of new or increased tariffs, shipping costs, import/export fees, duties, customs, or taxes, currency fluctuations, or increases in commodity or market pricing.
G. Pre-shipment of anchor bolts is plus freight.
H. Where applicable, fabrication and shipment of goods can only be made after Seller receives the following: (i) purchase order conforming to this Quotation, (ii) customer's verification and approval of technical information, (iii) approved Submittal Drawings, and (iv) credit approval.
I. Lead times are strictly estimates. Seller is not responsible for ship dates beyond estimated dates unless Seller's President or VP Finance otherwise explicitly agrees in a signed writing as part of this Quotation and then only to the extent so agreed.
J. All orders are FCA Shipping Point, prepaid and billed, unless otherwise noted in quote.
K. Logistic solutions, storage, handling, kitting, expedited or special delivery, testing, including, but not limited to, infrared scanning and NETA testing, spares, start-up, installation, commissioning, arc flash studies, and other services are excluded unless otherwise specified in this quote. Please contact your Seller representative for additional information on any such services if desired.
L. This quotation and all related transactions are also subject to the applicable manufacturer's published warranties, including all applicable disclaimers, exclusions, and limitations.
M. This quotation constitutes Seller's confidential information, and customer shall not share or distribute this quotation to third parties other than to the extent reasonably necessary to process the transactions contemplated herein with Seller.
N. Unless otherwise expressly agreed in a separate writing signed by Seller's President or VP Finance, Seller does not agree and is not subject to any contractual flow-down or pass-through terms from customer, including, but not limited to, DFARs, FARs, Prime Contracts, Minority Business requirements, Buy America Act, etc.

** Reprint ** Reprint ** Reprint **

LEHI CITY
POWER DEPARTMENT

7/17/2025

To: Jason Walker
Cc: Dean Lundell
From: Joel Eves
Re: Okonite Primary Wire

We have an immediate need for the Okonite Primary Wire for work on Commercial & Residential projects currently underway in the city.

We would like to continue purchasing this wire from Irby based on the following reasons:

- Currently they are the only vendor that stock and carry this wire.
- Okonite wire is 90% of the wire on our system,
- To keep our system standardized.
- Ensure safety of lineman.

While there may be other companies who could possibly provide this wire. At the present time Irby is the only company we can purchase Okonite wire from and receive in a timely manner.

Sincerely,

Joel Eves
Lehi City Corporation
Power Department Director

Quotation

irby
A Sonepar Company

STUART C IRBY BR 1093 SALT LAKE CTY
6312 WEST BEAGLEY ROAD
WEST VALLEY CITY UT 84128
385-285-3199

QUOTE DATE	ORDER NUMBER
07/17/25	S014320355

REMIT TO:	PAGE NO.
STUART C. IRBY CO. POST OFFICE BOX 843959 DALLAS TX 75284	1

SOLD TO:
LEHI CITY CORP
153 NO 100 EAST
LEHI, UT 84043

SHIP TO:
LEHI CITY CORP
560 WEST GLENN CARTER DRIVE
LEHI, UT 84043
801-768-7100

ORDERED BY: KENNY

CUSTOMER NUMBER	CUSTOMER ORDER NUMBER	JOB/RELEASE NUMBER	OUTSIDE SALESPERSON
222013	4/0		Gregory J McPhie

INSIDE SALESPERSON		REQD DATE	FRGHT ALLWD	SHIP VIA
JOSEPH C RHO		07/17/25	Yes	120 UTAH COUNTY

ORDER QTY	SHIP QTY	LINE	DESCRIPTION	Prc/Uom	Ext.Amt
			********* Shipping Instructions *********		
			* SCOTT PECK 801-494-9684 *		
			* KENNY 385-201-2612 OFC *		
			* 801-655-3042 MBL *		
			**********		
2525FT		1	OKON 162-23-3081 4/0-19X AL F/S 220M EPR 15KV 11X14 2500' (+/-)	4680.000M	11817.00
2517FT		2	OKON 162-23-3081 4/0-19X AL F/S 220M EPR 15KV 11X14 2500' (+/-)	4680.000M	11779.56
2517FT		3	OKON 162-23-3081 4/0-19X AL F/S 220M EPR 15KV 11X14 2500' (+/-)	4680.000M	11779.56
2517FT		4	OKON 162-23-3081 4/0-19X AL F/S 220M EPR 15KV 11X14 2500' (+/-)	4680.000M	11779.56
2517FT		5	OKON 162-23-3081 4/0-19X AL F/S 220M EPR 15KV 11X14 2500' (+/-)	4680.000M	11779.56
2517FT		6	OKON 162-23-3081 4/0-19X AL F/S 220M EPR 15KV 11X14 2500' (+/-)	4680.000M	11779.56
2517FT		7	OKON 162-23-3081 4/0-19X AL F/S 220M EPR 15KV 11X14 2500' (+/-)	4680.000M	11779.56
2517FT		8	OKON 162-23-3081 4/0-19X AL F/S 220M EPR 15KV 11X14 2500' (+/-)	4680.000M	11779.56
2500FT		9	OKON 162-23-3081 4/0-19X AL F/S 220M EPR 15KV 11X14 2500' (+/-)	4680.000M	11700.00

*** This is a quotation ***

Prices firm for acceptance within 30 days with the exception of commodity prices which are subject to change daily. Quotation is void if changed. Complete quote must be used unless authorized in writing.

All transactions are subject to and exclusively governed by our Terms and Conditions of Sale, which are incorporated herein and available at: https://www.irbyutilities.com/terms. Additional or conflicting terms are rejected, void, and of no force or effect.

Subtotal	105973.92
S&H CHGS	0.00
Sales Tax	0.00
TOTAL	105973.92

** Reprint ** Reprint ** Reprint **

Quotation

irby
A Sonepar Company

STUART C IRBY BR 1093 SALT LAKE CTY
6312 WEST BEAGLEY ROAD
WEST VALLEY CITY UT 84128
385-285-3199

QUOTE DATE	ORDER NUMBER
07/17/25	S014320355

REMIT TO:	PAGE NO.
STUART C. IRBY CO. POST OFFICE BOX 843959 DALLAS TX 75284	2

SOLD TO:
LEHI CITY CORP
153 NO 100 EAST
LEHI, UT 84043

SHIP TO:
LEHI CITY CORP
560 WEST GLENN CARTER DRIVE
LEHI, UT 84043
801-768-7100

ORDERED BY: KENNY

CUSTOMER NUMBER	CUSTOMER ORDER NUMBER	JOB/RELEASE NUMBER	OUTSIDE SALESPERSON
222013	4/0		Gregory J McPhie

INSIDE SALESPERSON		REQD DATE	FRGHT ALLWD	SHIP VIA
JOSEPH C RHO		07/17/25	Yes	120 UTAH COUNTY

Terms and Conditions of Sale for Quotes
A. Seller assumes no responsibility whatsoever for any interpretation of bid documents, plans, or specifications provided to Seller (i.e., customer shall be solely responsible for ensuring interpretation of such documents, plans and/or specifications and for conformity and appropriateness of all goods and services ordered in comparison to same).
B. Prices are subject to change at any time prior to shipment unless otherwise agreed in writing signed by an authorized Seller representative.
C. Pricing and estimated delivery dates are based solely on the quantities and specific products and/or scope of services identified in this quote. Seller may refuse, terminate, or change pricing, estimated dates, and other terms of its offer if customer requests changes or deviations from the original quote. Unless an authorized Seller representative accepts customer's proposed deviations in an explicit signed agreement modifying this quotation, any such proposed deviations are automatically rejected, void, and of no force or effect.
D. Quotation does not include special mounting or installation hardware, equipment options, accessories, samples, spares, or mock-up equipment unless otherwise noted.
E. Seller is not responsible for the design of the project or any goods supplied.
F. Seller reserves the right to increase the pricing quoted herein to account for force majeure events, the imposition of new or increased tariffs, shipping costs, import/export fees, duties, customs, or taxes, currency fluctuations, or increases in commodity or market pricing.
G. Pre-shipment of anchor bolts is plus freight.
H. Where applicable, fabrication and shipment of goods can only be made after Seller receives the following: (i) purchase order conforming to this Quotation, (ii) customer's verification and approval of technical information, (iii) approved Submittal Drawings, and (iv) credit approval.
I. Lead times are strictly estimates. Seller is not responsible for ship dates beyond estimated dates unless Seller's President or VP Finance otherwise explicitly agrees in a signed writing as part of this Quotation and then only to the extent so agreed.
J. All orders are FCA Shipping Point, prepaid and billed, unless otherwise noted in quote.
K. Logistic solutions, storage, handling, kitting, expedited or special delivery, testing, including, but not limited to, infrared scanning and NETA testing, spares, start-up, installation, commissioning, arc flash studies, and other services are excluded unless otherwise specified in this quote. Please contact your Seller representative for additional information on any such services if desired.
L. This quotation and all related transactions are also subject to the applicable manufacturer's published warranties, including all applicable disclaimers, exclusions, and limitations.
M. This quotation constitutes Seller's confidential information, and customer shall not share or distribute this quotation to third parties other than to the extent reasonably necessary to process the transactions contemplated herein with Seller.
N. Unless otherwise expressly agreed in a separate writing signed by Seller's President or VP Finance, Seller does not agree and is not subject to any contractual flow-down or pass-through terms from customer, including, but not limited to, DFARs, FARs, Prime Contracts, Minority Business requirements, Buy America Act, etc.

** Reprint ** Reprint ** Reprint **

Agenda Item No: 5

City Council Agenda Item Report

Meeting Date: July 22, 2025
Submitted By: Teisha WIlson
Submitting Department:
Item Type: Ordinance
Agenda Section: Regular Agenda

Subject:
Consideration of Ordinance #44-2025 adopting Title 6 Chapter 5 Section 8, Bridge Safety. - *This item has been pulled from the agenda.*

Suggested Action:

Attachments:

Agenda Item No: 6

City Council Agenda Item Report

Meeting Date: July 22, 2025
Submitted By: Teisha WIlson
Submitting Department:
Item Type: Action Item
Agenda Section: Regular Agenda

Subject:
Consideration of a Grading Permit approval for the Upper Inverness Grading Permit on 693.4 acres.

Suggested Action:

Attachments:

CC Staff Report Upper Inverness Grading 07.22.25.docx

Upper Inverness Grading Permit DRC 06.11.25.docx

Upper Inverness Grading Permit.pdf

UPPER INVERNESS GRADING PERMIT

CITY COUNCIL REPORT

Applicant	DR Horton
Meeting Date	July 22, 2025
Requested Action/Purpose	Public hearing and approval of a proposed grading permit
Existing Zoning	Planned Community
General Plan Designation	Low Density, Medium Density, Public Facility, Open Space
Existing Land Use	Undeveloped Hillside
Date of DRC Review	June 11, 2025
Assigned Planner	Brittney Harris

REQUIRED ACTION

Planning Commission	Public hearing and recommendation
City Council	Final approval

APPLICABLE DEVELOPMENT CODE REGULATIONS

Section 12-B.050 Grading Permit Issuance.

(a) When considering the approval of the grading permit the Public Works Director, Reviewing Departments, and (when applicable), Planning Commission and City Council, will verify that all of the following criteria are met (in addition to other applicable requirements of this code and other city codes):

(i) Approval of the proposal will not pose a threat to or be detrimental to the public health, safety, and welfare, nor be materially detrimental to fish and wildlife habitat and/or water resources as determined by an expert consultant.

(ii) The proposal is not in a sensitive lands area, as defined by Sections 12.060 (J) (K) of the Lehi City Development Code.

(iii) All subdivision~~s~~ plats and/or site plans must have at least a preliminary approval prior to issuance of a grading permit

PROPERTY HISTORY

December 11, 2012	City Council approved the Micron Area Plan
April 8, 2022	This property came into Lehi as the Micron East Annexation
August 23, 2022	City Council approved the Skye Area Plan amending the Micron Area Plan
September 19, 2023	City Council approved the Skye Area Plan Second Amendment
April 10, 2025	City Council approved the Inverness Plat D Preliminary Subdivision

REPORT ANALYSIS

The applicant requests review and recommendation for the Upper Inverness Grading Permit including approximately 693 acres in the upper area of Inverness. This will be the final grading taking place in Inverness and encompasses the right of way area of Inverness Preliminary Plat D. The applicant explained that part of getting this ready for grading is to allow for a place to bring in fill from other areas in Inverness. There will not be off-site disposal.

DRC had one redline comment to provide information on the reseeding and the erosion control plan.

SCOPE OF APPROVAL

Grading is an administrative item, as long as they meet the requirements of the Code, it must be approved.

POSSIBLE MOTIONS AND FINDINGS

The City Council may move to approve or deny the proposed grading permit. Any motion should include findings. Possible findings include:

1. The proposed grading meets the plans for the Inverness Preliminary Plat D
2. The proposed grading allows for on-site use of material from other phases of Inverness.
3. The proposed use, at the proposed location, will/will not be detrimental or injurious to property or improvements in the vicinity.
4. The proposed use will be located and conducted in a manner in compliance with the goals and policies of the Lehi City General Plan and the purposes of this Code.
5. Additional findings based upon information presented during the public hearing.

PLANNING COMMISSION RECOMMENDATION

The Planning Commission reviewed the proposed grading permit on July 10, 2025 and recommended approval subject to all DRC comments. The minutes and motion from that meeting were not available at the time this report was written.

Upper Inverness Grading Permit
DRC Redline Comments

DR Horton- requests review of the Upper Inverness Grading Permit including 693.4 acres.

DRC Members Present: Glade Kirkham, Garion Rowett, Ryan Allred, Shelbey Brewer, Kim Struthers, Gary Smith, Gary Ellis, James Farnsworth, Luke Seegmiller, Brad Wilbur
Assigned Planner: Brittney Harris
Representatives of the Applicant Present: Scott Bishop, Ben Tuckett, Landon Larsen
Date of Plans Reviewed: 05/20/25
Time Start: 1:14pm
Time End: 1:23pm

DRC REDLINE COMMENTS:
Glade – Power: No comments
Brad – Fiber: No comments
Garion – Fire: No comments
Ryan – Water/Sewer: No comments
James – Parks: No comments
Gary S. – Building/Inspections:
Building permits will be required for any retaining walls over 4 feet in height.
Shelbey – Public Works:
Update SWPPP maps prior to precon
Gary E. – Engineering:
1. Provide a reseeding and erosion control plan with an engineer's estimate if needed

Luke – Traffic: No comments
Kim – Planning:
Consider with the grading the trail that needs to connect between the upper area and the lower area. The trail needs to be shown at the time of preliminary as well.

THIS ITEM WILL BE SCHEDULED FOR PLANNING COMMISSION ON JULY 10th

PRECON MEETING REQUIRED? (FULL)

PRIOR TO PRECONSTRUCTION MEETING
1. Update SWPPP to include this area or submit new SWPPP
2. Provide an engineer's cost estimate for the cost of all improvements to Lehi City Engineering. (Stefanie Daggs- Sdaggs@lehi-ut.gov or 385-201-2523)
3. 10% Warranty Escrow Bond or Letter of Credit and Public/Private Improvement Agreement for all public and private improvements must be in place (from a financial institution with a branch in Utah).
4. Pay all necessary inspection fees and any up-front supply costs required by the City for power supplies, water system supplies, public signs (stop signs, address signs, etc.) and any other associated costs so that the City can order all necessary supplies for the development.
5. Include surveyor's and engineer's stamps and signatures on the construction drawings.
6. Obtain PLSS (Public Land Survey System) clearance letter from the Utah County Surveyor Office. If there are PLSS monuments located on or adjacent to property a monument excavation permit may be required.
   Per Utah Code 17-23-14 and 17-23-15. Contact info. Email surveyor@utahcounty.gov Address 2855 South State Street, Provo, UT 84606 (801) 851-8671 or (801) 851-8669.

Note: This list of corrections and deficiencies should not be considered as an all-inclusive or final list. The items listed need to be corrected and resolved and a new set of information submitted for review by the DRC. Further corrections and deficiencies may still be noted as the DRC further reviews the resubmitted information.

Inverness North Side Grading Permit Narrative

1. **The project is a hillside development and will be graded for typical residential development.**
    a. **Approximately 189k yards of cut and 551k yards of fill, subject to change to better balance the site.**
    b. **Significant efforts will be made to keep all material on site.**
    c. **Completion date 24 to 36 months after approval**
    d. **Water truck on site to control dust**
    e. **Track out and SWPPP will be in place – fencing and signage to keep unauthorized people offsite**
2. **Non-disturbance areas are shown on the maps and will be marked in the field to ensure the native hillside vegetation remains intact.**
3. **Vicinity map attached**
4. **Legal description attached**
5. **Map of subject area – attached**
6. **No off site haul routes needed**
7. **Some retaining walls 4' or higher may be needed**
8. **There is an existing ravine in this phase that conveys upstream runoff. The proposed grading and roadway (Horton Way) will cross this ravine in one location. Piping will be included at this crossing to provide pass-through capabilities for the upstream runoff.**
9. **SWPPP will be done with Silverleaf prior to pre-con**
10. **Utah State Notice of Intent will be in place prior to pre-con**

NORTH

SCALE: 1"=250'

250 125 0 250

NOTES

1. WATER MUST BE PROVIDED FOR FIRE PROTECTION WHILE GRADING IN THE WILDLAND URBAN INTERFACE.
2. ANY DISTURBED GROUND THAT WILL REMAIN AS NATIVE OPEN SPACE SHALL BE RE-SEEDED WITH A NATIVE SEED MIX AS SHOWN IN THE DETAIL BELOW.

RE-VEGETATIVE SEED MIX

SPECIES	%
SLENDER WHEATGRASS	15
WESTERN WHEATGRASS	17.5
BLUEBUNCH WHEATGRASS	16.25
SHEEP FESCUE	3.5
SANDBERG BLUEGRASS	2.75
INDIAN RICEGRASS	10
RUBBER RABBIT BRUSH	5
WESTERN SAGE	5
BLANKET FLOWER	5
BLUE FLAX	10
CALIFORNIA POPPY	10

NOTES:
1 SEEDING RATE IS 20 LBS PER ACRE
2 SEEDMIX PROVIDED BY GRANITE SEED, LEHI, UT

GRADING PERMIT BOUNDARY

Located in the Northeast, Southeast, Southwest and Northwest Quarters of Section 21, the Southwest Quarter and Northwest Quarter of Section 22, and the Northeast Quarter and Northwest Quarter of Section 28, Township 4 South, Range 1 East, Salt Lake Base and Meridian, described as follows:

Beginning at a point located N89°52'57"E along the section line 837.48 feet and North 80.48 feet from the Northwest Corner of Section 27, Township 4 South, Range 1 East, Salt Lake Base and Meridian; thence West 713.30 feet; thence S66°28'03"W 80.96 feet; thence N89°51'23"W 1562.01 feet; thence S00°01'55"E 1001.52 feet; thence S66°34'08"W 204.99 feet; thence S65°52'12"W 197.66 feet; thence S71°41'45"W 2350.46 feet; thence S74°14'17"W 247.88 feet; thence S58°17'16"W 96.39 feet; thence S88°33'32"W 118.92 feet; thence along the arc of a non-tangent curve to the left 91.78 feet with a radius of 2536.00 feet through a central angle of 02°04'25", chord: N02°29'40"W 91.78 feet; thence N03°31'53"W 90.84 feet; thence along the arc of a curve to the right 94.97 feet with a radius of 305.00 feet through a central angle of 17°50'26", chord: N05°23'20"E 94.59 feet; thence N14°18'33"E 161.30 feet; thence along the arc of a curve to the left 141.87 feet with a radius of 395.00 feet through a central angle of 20°34'42", chord: N04°01'12"E 141.11 feet; thence N06°16'09"W 282.17 feet; thence along the arc of a curve to the right 83.92 feet with a radius of 355.00 feet through a central angle of 13°33'38", chord: N00°30'10"E 83.72 feet; thence N07°16'29"E 344.23 feet; thence N88°03'00"E 141.56 feet; thence N38°46'33"E 116.45 feet; thence N51°04'20"E 208.19 feet; thence N17°20'29"E 352.44 feet; thence N47°46'04"E 65.00 feet; thence N11°47'43"E 164.55 feet; thence N19°02'53"W 238.66 feet; thence S88°04'15"W 1267.89 feet to the west line of Section 21; thence N00°13'47"E along the section line 2368.24 feet to the West Quarter Corner of Section 21; thence N00°13'28"E along the section line 1346.52 feet; thence N89°59'41"E 3420.94 feet; thence S00°00'19"E 715.98 feet; thence N89°59'41"E 2900.00 feet; thence N73°56'41"E 899.58 feet; thence S19°19'38"E 2148.33 feet; thence S51°15'30"W 2266.85 feet to the point of beginning.

Contains: ±693.40 Acres

LEI
- A Utah Corporation -
ENGINEERS
SURVEYORS
PLANNERS
3302 N. Main Street
Spanish Fork, UT 84660
Phone: 801.798.0555
Fax: 801.798.9393
office@lei-eng.com
www.lei-eng.com

NOT FOR CONSTRUCTION

INVERNESS
LEHI, UTAH

NORTH GRADING PERMIT

REVISIONS
1 -
2 -
3 -
4 -
5 -

LEI PROJECT #: 2020-0067
DRAWN BY: DSE
DESIGNED BY: BCT
SCALE: 1"=250'
DATE: 05/14/2025
SHEET
COVER

Cut/Fill Summary

Name	Cut Factor	Fill Factor	2d Area	Cut	Fill	Net
NORTH VOLUME	1.000	1.000	3288219.33 Sq. Ft.	189062.21 Cu. Yd.	550819.04 Cu. Yd.	361756.82 Cu. Yd.<Fill>
Totals			3288219.33 Sq. Ft.	189062.21 Cu. Yd.	550819.04 Cu. Yd.	361756.82 Cu. Yd.<Fill>

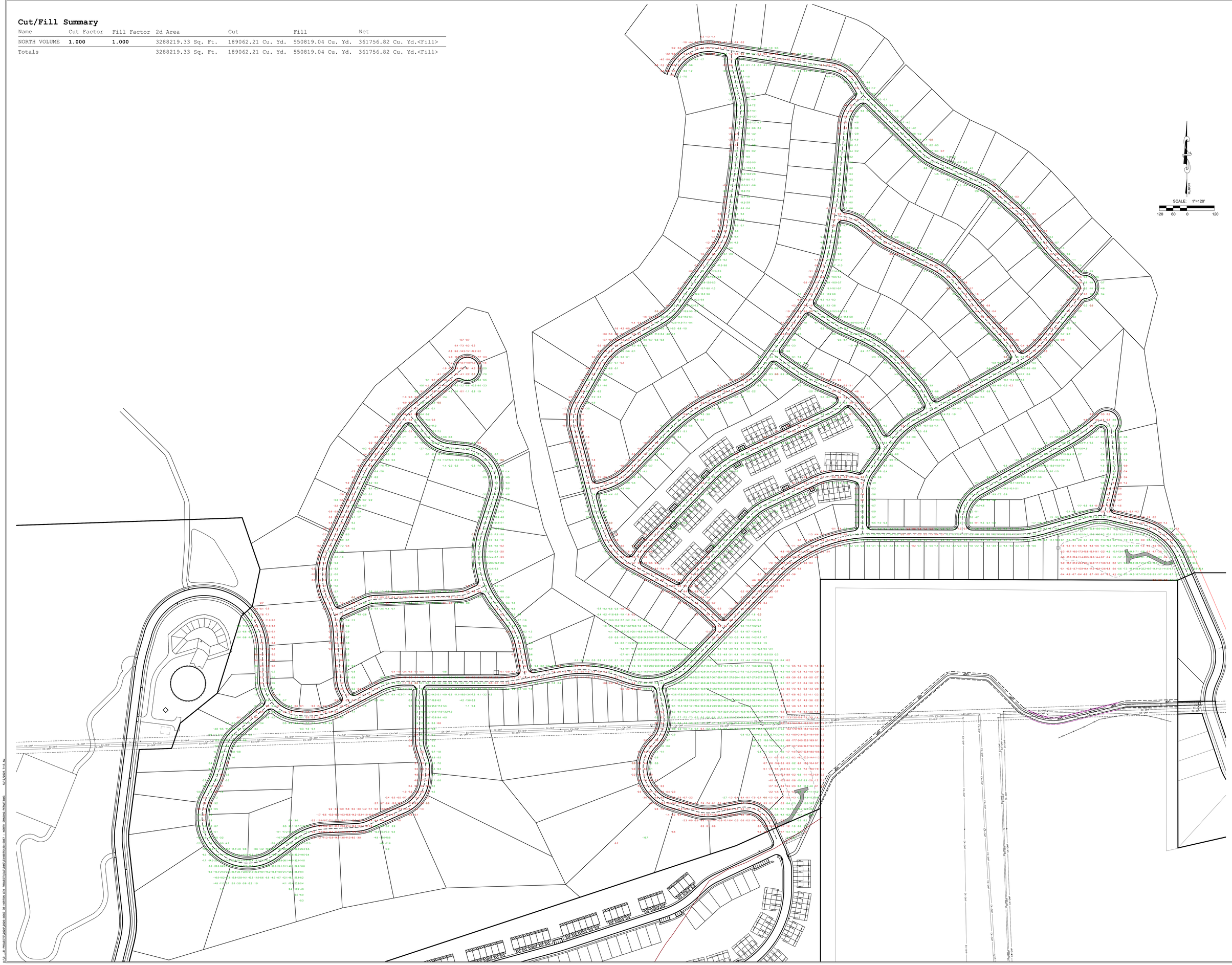

LEI
- A Utah Corporation -
ENGINEERS
SURVEYORS
PLANNERS
3302 N. Main Street
Spanish Fork, UT 84660
Phone: 801.798.0555
Fax: 801.798.9393
office@lei-eng.com
www.lei-eng.com

NOT FOR CONSTRUCTION

INVERNESS
LEHI, UTAH

MASS GRADING CUT/FILL - NG TO SUBGRADE

REVISIONS
1 -
2 -
3 -
4 -
5 -

LEI PROJECT #: 2020-0067
DRAWN BY: DSE
DESIGNED BY: BCT
SCALE: 1"=120'
DATE: 05/14/2025
SHEET 1

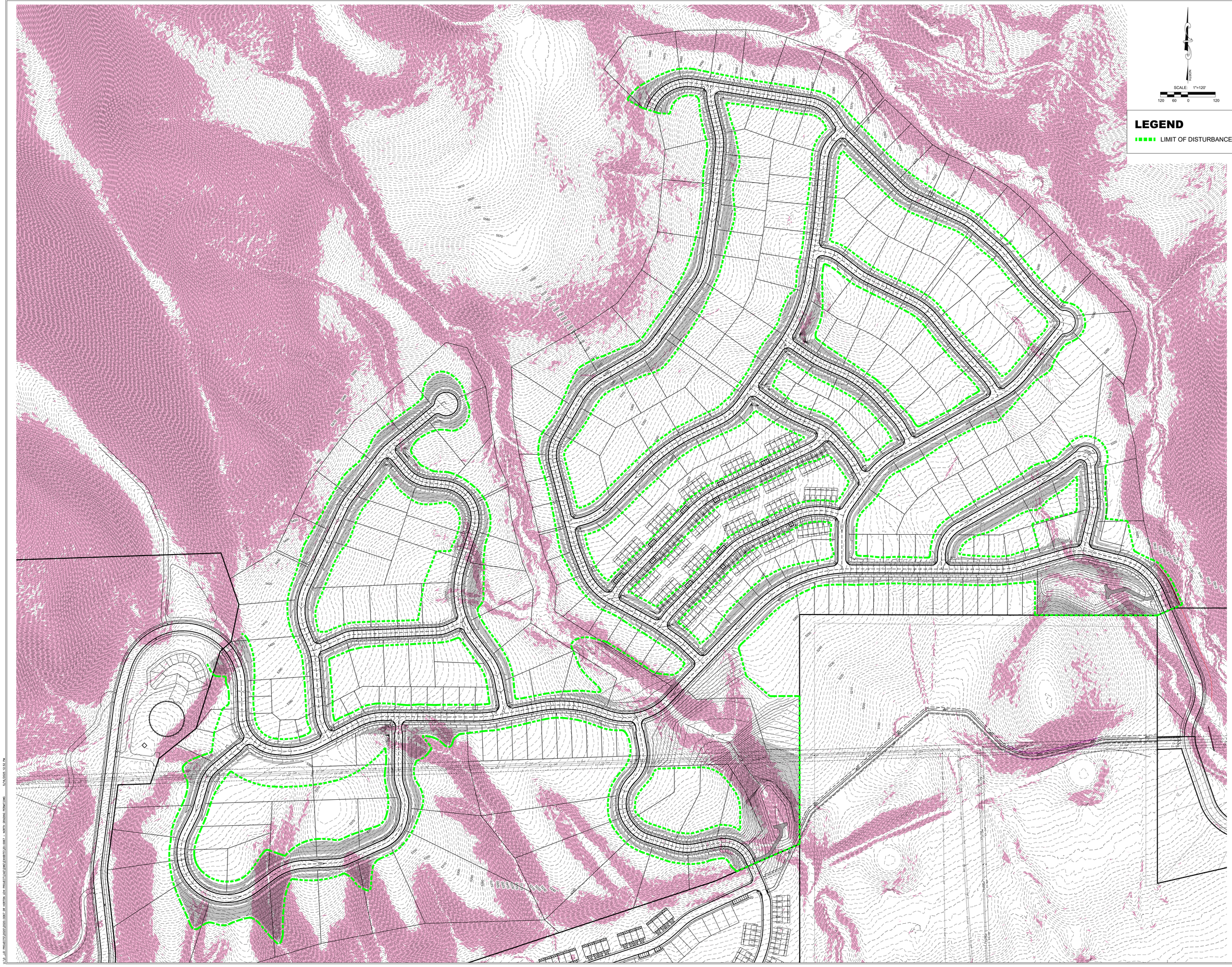

LEGEND

LIMIT OF DISTURBANCE

LEI
- A Utah Corporation -
ENGINEERS
SURVEYORS
PLANNERS
3302 N. Main Street
Spanish Fork, UT 84660
Phone: 801.798.0555
Fax: 801.798.9393
office@lei-eng.com
www.lei-eng.com

NOT FOR CONSTRUCTION

INVERNESS

LEHI, UTAH

MASS GRADING - CONTOURS

REVISIONS
1 -
2 -
3 -
4 -
5 -

LEI PROJECT #: 2020-0067
DRAWN BY: DSE
DESIGNED BY: BCT
SCALE: 1"=120'
DATE: 05/14/2025
SHEET 2

Agenda Item No: 7

City Council Agenda Item Report

Meeting Date: July 22, 2025
Submitted By: Teisha WIlson
Submitting Department:
Item Type: Resolution
Agenda Section: Regular Agenda

Subject:
Consideration of Resolution #2025-49 approving a Construction Agreement with Rino Excavation for the construction of the Lambert Basin Strom Drain.

Suggested Action:

Attachments:

Res 2025-49.docx

Agreement (Owner & Contractor) - Rino Excavating LLC.pdf

RESOLUTION NO. 2025-49

A RESOLUTION OF THE LEHI CITY COUNCIL APPROVING A CONSTRUCTION AGREEMENT RINO EXCAVATION LLC FOR THE CONSTRUCTION OF THE LAMBERT BASIN STORM DRAIN

WHEREAS, Lehi City ("City") City desires to contract for the construction of the LAMBERT BASIN STORM DRAIN (the "Work"); and

WHEREAS, City issued RFP 2025-_____ and Rino Excavation LLC, submitted a Response to RFP 2025____ which City determined to be the lowest responsive and most responsible proposal and the City desires to contract with Rino Excavation LLC, to perform the Work.

WHEREAS, on July 22, 2025, the Lehi City Council held a duly-noticed public meeting to ascertain the facts regarding this matter, which facts and comments are found in the meeting record; and,

WHEREAS, after considering the facts and comments presented to the City Council, the Council finds: (i) that it should approve the Lambert Basin Storm Drain Construction Services Agreement with Rino Excavation LLC; and (ii) such action furthers the health, safety and welfare of the citizens of Lehi.

NOW, THEREFORE, be it resolved by the City Council of Lehi City, Utah, as follows:

1. The Agreement between Lehi City and Rino Excavation LLC attached hereto as Exhibit "A" is hereby approved and the Mayor is authorized to execute the Agreement and take all other such action as is necessary to make it effective.

2. This resolution shall take effect immediately.

Approved and Adopted by the City Council of Lehi City, Utah this 22nd day of July, 2025.

LEHI CITY

_____

Mark Johnson, Mayor

ATTEST

_____

Teisha Wilson, City Recorder

EXHIBIT “A”

AGREEMENT BETWEEN OWNER & CONTRACTOR

THIS AGREEMENT is by and between Lehi City Corporation ("Owner") and

RINO EXCAVATING LLC ("Contractor").

Owner and Contractor hereby agree as follows:

ARTICLE 1 – WORK

1.01 Contractor shall complete all Work as specified or indicated in the Contract Documents. The Work is generally described as follows:

The work is comprised of the construction of a new 48" reinforced concrete pipe storm drain line, located approximately 700 northward along Digital Drive from the nearest posted address of 4651 North Digital Drive, Lehi, Utah (Ut County Parcel No. 58:002:0110); including manholes, cast-in-place boxes, site grading, and rail road removal and replacement.

ARTICLE 2 – THE PROJECT

The Project, of which the Work under the Contract Documents is a part, is generally described as follows: Construction of a new 48" RCP Storm Drain.

ARTICLE 3 – ENGINEER

3.01 Work shown on the attached plan sheets has been designed by various engineers as shown on the individual plan sheets.

ARTICLE 4 – CONTRACT TIMES

4.01 Time of the Essence

A. All time limits for Milestones, if any, Substantial Completion, and completion and readiness for final payment as stated in the Contract Documents are of the essence of the Contract.

4.02 Contract Times: Dates

A. The Work will be substantially completed on or before: **April 30th, 2026**, or as extended by mutual agreement through approved change orders, and completed and ready for final payment in accordance with Paragraph 15.06 of the General Conditions on or before: **May 31st, 2026**, or as extended by mutual agreement through approved change orders.

4.03 Liquidated Damages

A. Contractor and Owner recognize that time is of the essence as stated in Paragraph 4.01 above and that Owner will suffer financial and other losses if the Work is not completed and Milestones not achieved within the times specified in Paragraph 4.02 above, plus any extensions thereof allowed in accordance with the Contract. The parties also recognize the delays, expense, and difficulties involved in proving in a legal or arbitration proceeding the actual loss suffered by Owner if the Work is not completed on time. Accordingly, instead of requiring any such proof, Owner and Contractor agree that as liquidated damages for delay (but not as a penalty):

1. Substantial Completion: Contractor shall pay Owner $500.00 for each day that expires after the time (as duly adjusted pursuant to the Contract) specified in Paragraph 4.02.A above for Substantial Completion until the Work is substantially complete.

ARTICLE 5 – CONTRACT PRICE

5.01 Owner shall pay Contractor for completion of the Work in accordance with the Contract Documents the amounts that follow, subject to adjustment under the Contract:

A. OWNER shall pay CONTRACTOR for performance of the Work in accordance with the Contract Documents in current funds as follows:

$500,890.00
(Figures)

FIVE HUNDRED THOUSAND EIGHT HUNDRED NINETY AND 00/100
(Writing)

B. CONTRACTOR'S Bid Form is included in the Bidding Requirements of the Project Manual and is hereby designated as an Exhibit to this Agreement as described in Article 9 hereunder.

The extended prices for Unit Price Work set forth as of the Effective Date of the Contract are based on estimated quantities. As provided in Paragraph 13.03 of the General Conditions, estimated quantities are not guaranteed, and determinations of actual quantities and classifications are to be made by Engineer.

ARTICLE 6 – PAYMENT PROCEDURES

6.01 Submittal and Processing of Payments

A. Contractor shall submit Applications for Payment in accordance with Article 15 of the General Conditions. Applications for Payment will be processed by Engineer as provided in the General Conditions.

6.02 Progress Payments; Retainage

A. Owner shall make progress payments once each month on account of the Contract Price on the basis of Contractor's Applications for Payment as recommended by the Engineer. All progress payments will be on the basis of the progress of work, less 5% retainage withheld by Owner.

6.03 Final Payment

A. Upon final completion and acceptance of the Work in accordance with Paragraph 15.06 of the General Conditions, Owner shall pay the remainder of the Contract Price as recommended by Engineer as provided in said Paragraph 15.06.

ARTICLE 7 – INTEREST

7.01 All amounts not paid when due shall bear interest at the maximum rate allowed by law at the place of the project.

ARTICLE 8 – CONTRACTOR'S REPRESENTATIONS

8.01 In order to induce Owner to enter into this Contract, Contractor makes the following

representations:

A. Contractor has examined and carefully studied the Contract Documents, and any data and reference items identified in the Contract Documents.

B. Contractor has visited the Site, conducted a thorough, alert visual examination of the Site and adjacent areas, and become familiar with and is satisfied as to the general, local, and Site conditions that may affect cost, progress, and performance of the Work.

C. Contractor is familiar with and is satisfied as to all Laws and Regulations that may affect cost, progress, and performance of the Work.

D. Contractor has considered the information known to Contractor itself; information commonly known to contractors doing business in the locality of the Site; information and observations obtained from visits to the Site; the Contract Documents; and the Site-related reports and drawings identified in the Contract Documents, with respect to the effect of such information, observations, and documents on (1) the cost, progress, and performance of the Work; (2) the means, methods, techniques, sequences, and procedures of construction to be employed by Contractor; and (3) Contractor's safety precautions and programs.

E. Based on the information and observations referred to in the preceding paragraph, Contractor agrees that no further examinations, investigations, explorations, tests, studies, or data are necessary for the performance of the Work at the Contract Price, within the Contract Times, and in accordance with the other terms and conditions of the Contract.

F. Contractor is aware of the general nature of work to be performed by Owner and others at the Site that relates to the Work as indicated in the Contract Documents.

G. Contractor has given Engineer written notice of all conflicts, errors, ambiguities, or discrepancies that Contractor has discovered in the Contract Documents, and the written resolution thereof by Engineer is acceptable to Contractor.

H. The Contract Documents are generally sufficient to indicate and convey understanding of all terms and conditions for performance and furnishing of the Work.

I. Contractor's entry into this Contract constitutes an incontrovertible representation by Contractor that without exception all prices in the Agreement are premised upon performing and furnishing the Work required by the Contract Documents.

ARTICLE 9 – CONTRACT DOCUMENTS

9.01 Contents

A. The Contract Documents consist of the following:

1. This Agreement (pages 1 to 7, inclusive).

2. Performance bond (pages 1 to 3, inclusive).

3. Payment bond (pages 1 to 3, inclusive).

4. General Conditions (pages 1 to 69, inclusive).

5. Supplementary Conditions (pages 1 to 5, inclusive).

6. Specifications as listed in the table of contents of the Project Manual.

7. Drawings (not attached but incorporated by reference) consisting of 11 sheets with each sheet bearing the following general title: LAMBERT DETENTION BASIN STORM DRAIN

8. Addenda (numbers **01** to **01**, inclusive).

9. Exhibits to this Agreement (enumerated as follows):

   a. Contractor's Bid (pages **1** to **11**, inclusive).

10. The following which may be delivered or issued on or after the Effective Date of the Contract and are not attached hereto:

   a. Notice to Proceed.

   b. Change Orders.

B. The documents listed in Paragraph 9.01.A are attached to this Agreement (except as expressly noted otherwise above).

C. There are no Contract Documents other than those listed above in this Article 9.

D. The Contract Documents may only be amended, modified, or supplemented as provided in the General Conditions.

ARTICLE 10 – MISCELLANEOUS

10.01 Terms

A. Terms used in this Agreement will have the meanings stated in the General Conditions and the Supplementary Conditions.

10.02 Assignment of Contract

A. Unless expressly agreed to elsewhere in the Contract, no assignment by a party hereto of any rights under or interests in the Contract will be binding on another party hereto without the written consent of the party sought to be bound; and, specifically but without limitation, money that may become due and money that is due may not be assigned without such consent (except to the extent that the effect of this restriction may be limited by law), and unless specifically stated to the contrary in any written consent to an assignment, no assignment will release or discharge the assignor from any duty or responsibility under the Contract Documents.

10.03 Successors and Assigns

A. Owner and Contractor each binds itself, its successors, assigns, and legal representatives to the other party hereto, its successors, assigns, and legal representatives in respect to all covenants, agreements, and obligations contained in the Contract Documents.

10.04 Severability

A. Any provision or part of the Contract Documents held to be void or unenforceable under any Law or Regulation shall be deemed stricken, and all remaining provisions shall continue to be valid and binding upon Owner and Contractor, who agree that the Contract Documents shall be reformed to replace such stricken provision or part thereof with a valid and enforceable provision that comes as close as possible to expressing the intention of the stricken provision.

10.05 Contractor's Certifications

A. Contractor certifies that it has not engaged in corrupt, fraudulent, collusive, or coercive practices in competing for or in executing the Contract. For the purposes of this Paragraph 10.05:

1. "corrupt practice" means the offering, giving, receiving, or soliciting of anything of value likely to influence the action of a public official in the bidding process or in the Contract execution;

2. "fraudulent practice" means an intentional misrepresentation of facts made (a) to influence the bidding process or the execution of the Contract to the detriment of Owner, (b) to establish Bid or Contract prices at artificial non-competitive levels, or (c) to deprive Owner of the benefits of free and open competition;

3. "collusive practice" means a scheme or arrangement between two or more Bidders, with or without the knowledge of Owner, a purpose of which is to establish Bid prices at artificial, non-competitive levels; and

4. "coercive practice" means harming or threatening to harm, directly or indirectly, persons or their property to influence their participation in the bidding process or affect the execution of the Contract.

10.06 Indemnification

A. To the fullest extent permitted by law the CONTRACTOR shall indemnify, defend and hold harmless the OWNER and its officers, agents, representatives and employees from any and all claims, demands, liabilities, damages, injuries, causes of action, costs and expenses, including attorney's fees, arising out of or in any way related to the performance of the Work caused in whole or in part by any negligent act or omission of the CONTRACTOR, or anyone directly or indirectly employed by CONTRACTOR.

10.07 Termination

A. OWNER, upon written notice, may terminate this Agreement, or any part hereof, as a result of the CONTRACTOR'S failure to render to the satisfaction of OWNER, the material, work and/or services required of it, including progress of the work and such abandonment or termination shall not be deemed a breach by OWNER. The CONTRACTOR shall not be entitled, nor shall OWNER give any consideration to claims for any costs or for loss of anticipated revenue(s), including overhead and profit, due to the abandonment or termination of this Agreement, or any part hereof, by OWNER for cause.

10.08 Force Majeure

A. "Force Majeure" shall be considered to be an act of God, nature, fire, or explosion that, due to its consequences, threatens to delay the timely performance of the parties' obligations hereunder. Whenever either party has knowledge of any event of Force Majeure or other situation that is delaying or threatens to delay the timely performance of any obligation called for by this Agreement, that party shall immediately give written notice thereof, including all relevant information with respect thereto, to the other party. Neither party to this Agreement shall be liable for delay or failure to perform pursuant to the terms of this Agreement that is caused by a Force Majeure event.

IN WITNESS WHEREOF, Owner and Contractor have signed this Agreement.

This Agreement will be effective on _____ (which is the Effective Date of the Contract).

OWNER:

Lehi City Corporation

By: _____

Title: _____

Attest: _____

Title: _____

Address for giving notices:

153 North 100 East

PO Box 255

Lehi, Ut 84043

(If Owner is a corporation, attach evidence of authority to sign. If Owner is a public body, attach evidence of authority to sign and resolution or other documents authorizing execution of this Agreement.)

CONTRACTOR:

RINO EXCAVATING LLC

By: _____

Title: _____

(If Contractor is a corporation, a partnership, or a joint venture, attach evidence of authority to sign.)

Attest: _____

Title: _____

Address for giving notices:

_____

_____

_____

License No.: _____
(where applicable)

END OF SECTION

Agenda Item No: 8

City Council Agenda Item Report

Meeting Date: July 22, 2025
Submitted By: Teisha WIlson
Submitting Department:
Item Type: Resolution
Agenda Section: Regular Agenda

Subject:
Consideration of Resolution # 2025-50 approving a Master Agreement with UDOT for the construction of water, sewer, irrigation, and storm drain improvement as part of the 2100 N Project.

Suggested Action:

Attachments:

Res 2025-50.docx

13420_UTIL_LehiCityWater_IR_Master_Agreement_20250715-from UDOT for Council.pdf

RESOLUTION NO. 2025-50

A RESOLUTION OF THE LEHI CITY COUNCIL APPROVING A MASTER AGREEMENT WITH UDOT FOR THE RELCOATION, PROTECTION OR ADJUSTMENT OF WATER, SEWER, IRRIGATION, AND STORM DRAIN IMPROVEMENTS AS PART OF THE 2100 N. PROJECT.

WHEREAS, UDOT has identified city-owned water, sewer, irrigation and storm drain facilities which may need to be relocated, protected, or adjusted as part of its 2100 North expansion project;

WHEREAS, UDOT is willing to design and perform the third-party work on City infrastructure necessitated by the expansion of 2100 North;

WHEREAS, the City will perform the necessary design review and inspection to accommodate UDOT's expansion project;

WHEREAS, on July 22, 2025, the Lehi City Council held a duly-noticed public meeting to ascertain the facts regarding this matter, which facts and comments are found in the meeting record; and,

WHEREAS, after considering the facts and comments presented to the City Council, the Council finds: (i) that it should approve a Master Agreement with UDOT for water, sewer, irrigation and storm drain facilities; and (ii) such action furthers the health, safety and welfare of the citizens of Lehi.

NOW, THEREFORE, be it resolved by the City Council of Lehi City, Utah, as follows:

1. The Master Agreement between Lehi City and UDOT attached hereto as Exhibit "A" is hereby approved and the Mayor is authorized to execute the Agreement and take all other such action as is necessary to make it effective.

2. This resolution shall take effect immediately.

Approved and Adopted by the City Council of Lehi City, Utah this 22nd day of July, 2025.

LEHI CITY ATTEST

_____ _____

Mark Johnson, Mayor Teisha Wilson, City Recorder

EXHIBIT “A”

LEHI CITY WATER, SEWER, IRRIGATION, STORM DRAIN MASTER AGREEMENT

THIS MASTER AGREEMENT is made by and between the **Utah Department of Transportation**, ("UDOT"), and Lehi City, a Political Subdivision of the State of Utah, ("City"). Each as party, ("Party"), and together as parties, ("Parties").

RECITALS

WHEREAS, UDOT is preparing to request proposals for and award a design-build contract for the highway project identified as Project Number S-0194(6)0, SR-194; Lehi 2100 N Freeway in Utah County, Utah, ("Project"); and

WHEREAS, the design-build contractor will complete the design and administer construction of the Project ("Design-Builder"); and

WHEREAS, UDOT has identified City water, sewer, irrigation, and storm drain facilities ("Facility or Facilities") within the limits of the Project which may necessitate the relocation, protection, or adjustment of the Facilities ("Third-Party Work"); and

WHEREAS, the City desires for UDOT to design and perform the Third-Party Work on the Facilities necessitated by the Project; and

WHEREAS, the City will perform the necessary design review and inspection to accommodate the Project; and

WHEREAS, for the purpose of expediting any required Third-Party Work and reimbursement, the Parties are entering into this Master Agreement with the understanding that future Supplemental Agreements to this Agreement will be entered into covering the specific Third-Party Work to be accomplished by UDOT for each specific impact location.

THIS AGREEMENT is made to set out the terms and conditions for the Third-Party Work that shall be performed.

AGREEMENT

NOW THEREFORE, in consideration of the foregoing recitals, which by this reference are incorporated into this Agreement, and for the terms set forth below, the Parties agree as follows:

1. **PROJECT RESPONSIBLE FOR COST**

UDOT is responsible for 100% of the cost of the Third-Party Work of Facilities for those costs that comply with Utah Administrative Code R930-8 and are not located within the interstate system. Utah Code § 72-6-116(3)(a)(ii).

2. **CONTACT INFORMATION**

UDOT's Project Representative is Marshall Terry, Utility and Railroad Lead, telephone number (801) 227-8014, and e-mail mjterry@utah.gov.

UDOT's Consultant Utility Coordinator is Rachael Blackburn, telephone number (801)928-0212, and email rachael@dserio.com.

UDOT's Third Party Utility Quality Lead is Brandon Wilson, telephone number (385) 235-0800, and e-mail brandon@dserio.com.

UDOT's Resident Engineer is Matt Parker, telephone number (801) 222-3420, and e-mail mattparker@utah.gov, or their designated representative, as assigned.

UDOT's Field Representative contact person will be identified in subsequent Supplemental Agreements.

City's contact person is Greg Allred, telephone number (385) 201-2425 and e-mail gallred@lehi-ut.gov.

After awarding the Project, UDOT will provide the City with the Design-Builder contact information, ("Design-Builder Project Representative").

3. **AUTHORIZATION FOR DESIGN WORK**

In order to facilitate coordination and obtain technical information about the Facilities and City's requirements for inclusion in this Agreement and the Project Request for Proposals, UDOT gave the City authorization for preliminary design engineering on June 8, 2024.

4. **SUBSURFACE UTILITY ENGINEERING**

UDOT has performed Subsurface Utility Engineering (SUE) within the limits of the Project. Additional SUE work to determine the precise location of underground facilities at specific, critical locations on the Project will be reviewed with the City.

5. PROJECT COORDINATION

During the development of the Project design, the City and UDOT, along with its Design-Builder, shall consult as necessary in an effort to determine if conflicts with the Facilities can be avoided.

If Third-Party Work is required by the Project, UDOT will be responsible to identify the conflicts and to design and construct the Third-Party Work. The City will perform the necessary design reviews prior to the start of Third-Party Work. UDOT's Project Representative will be responsible for coordinating with other third-parties as it relates to Facilities.

6. CITY REQUIREMENTS

UDOT will comply with the following City requirements**:**

a. Follow City's storm water Best Management Practices, included in Exhibit "A" that is incorporated by reference.
b. Coordinate Third-Party Work per the requirements of this Master Agreement.
c. City water and pressurized irrigation lines provide service to customers and must remain in service at all times during construction with the exception of short period shutdowns that shall not exceed a maximum duration of 10 hours.
d. Water and pressurized irrigation shutdown requests shall be hand delivered to the City, in writing, 2 weeks prior to the shutdown date.
e. Shutdowns need to be preapproved by the City, in writing, and coordinated through the City.
f. Weekday shutdowns shall be performed between the hours of 10pm and 8am. Weekend shutdowns shall be performed between Friday at 10pm and Monday at 8am.
g. Notify the City engineer and/or City inspectors two weeks prior to making any changes to the plans or prior to constructing any Facilities not in the plans.
h. Access to existing Facilities shall be maintained and provided without permit for the duration of the Project.
i. Upsize 14-inch pipe to 16-inch ductile iron pipe when relocation is necessary, City no longer uses 14-inch pipe due to material availability.
j. Maximum bury depth on water and irrigation lines is six feet to top of pipe unless approved otherwise by the City. Minimum bury depth on water and irrigation lines is four feet to top of pipe unless approved otherwise by the City. All existing water and irrigation crossings must be kept for redundancy; crossings may not be combined. Only one water and irrigation crossing may be out of service at any time. Construct blow off valves including fire hydrants that are used as pressurized irrigation blow off valves at a maximum of 1,000-foot intervals for waterline relocations.
k. Vertical risers at walls and abutments are not allowed.

l. Sewer relocations and modifications must be designed and constructed as gravity flow in accordance with City standards and specifications. Sewer siphons and sewer lift stations are not allowed. Ensure crown elevations of each pipe match where smaller diameter pipes connect to larger diameter pipes.

m. All relocated City utility facilities must be in a City exclusive easement; facilities may not be relocated in a Public Utility Easement.

n. City utility design review must be submitted to the City Development Review Committee (DRC). DRC meetings are held each Wednesday; submissions are due by 5 P.M. Tuesday a minimum of one week prior to DRC review meeting. Contact Katie Bussell: kbussell@lehi-ut.gov to submit designs to be reviewed by the DRC. City review may take longer than one week depending on submittal size and City workload.

o. Utilities crossing SR194 and I-15 shall meet UDOT R930-7-4 and City casing requirements. Place valves far enough from casing end sections so that casings may be used for future carrier pipe installations. Other facility encasements may be required dependent upon final design.

p. City will not accept any settlement on their facilities.

q. Supply as-constructed plans, in a PDF format, upon completion of any required Third-Party Work.

r. Split casings are not allowed where steel casings are required.

7. **UDOT TO DESIGN AND CONSTRUCT THIRD-PARTY WORK**

UDOT will schedule and meet with the City to review the design and scheduling of the Third-Party Work to ensure maximum lead time for advance order of materials and workforce scheduling.

a. UDOT will design the Third-Party Work in accordance with City's standards regularly followed by the City in its own work and not considered a betterment. In the event of a conflict between UDOT and City standards, the higher standard will be applied. The City standards in effect at the time of the signing of this Agreement, are attached as Exhibit "B", and incorporated by reference, shall be the standards required for this Project.

b. Existing City facilities crossing UDOT right-of-way shall be relocated and installed inside a casing (per City standards).See Exhibit "A" for Utility Casing detail.

   i. Casing shall terminate a minimum of 5' past UDOT NA Line.

   ii. Both pipes inside of the casing must be locking, restrained, or fused joints.

c. Specific Utility Crossing Requirements:

   i. **Irrigation Crossing SR-194 at Ashton Boulevard:** Provide steel casings and Class 350 ductile iron pipe with restrained or locking pipe within the casing.

   ii. **Ashton Boulevard:** Relocate the sewer to eliminate manholes from within the NA Line. Provide fused PVC pipe in casing.

iii. **Irrigation and Water crossing SR194 at Pointe Meadow Drive:** Provide steel casings and Class 350 ductile iron pipe with restrained or locking pipe within the casing.

iv. **Pointe Meadow Drive:** If the sewer crossing SR194 at Pointe Meadow Dr. is impacted or requires relocation, realign the sewer line outside of the NA line or encase in steel pipe with fused PVC carrier pipe.

v. **East of I-15 at 900 W:** Remove sewer manhole from within NA Line and realign sewer lines within City utility easement. Extend irrigation and sewer casings. Cut and cap existing irrigation line under I-15 and install fire hydrant on end of active line. Terminate abandoned water, irrigation and sewer service laterals in accordance with Lehi City Standards.

vi. **West of I-15 at 900 W:** Cut and cap existing irrigation line under I-15 and install fire hydrant on end of active line.

vii. **Waterbury Drive:** Protect existing irrigation and waterlines in place. Casings are not required

viii. **1200 W. at State Street:** Protect existing irrigation line and water line in place. Casings are not required.

ix. **2100 N and 1050 W:** Protect existing irrigation line and water line in place.

x. **2100 N and 2300 W:** Relocate the existing sewer. Sewer pipe material shall be PVC equivalent to SDR 35, 42-inch minimum inside diameter, minimum slope of .05% to be approved by Lehi City. Sewer pipe material crossing of 2100 N. shall be Hobas pipe. Provide 3 feet minimum cover over casing, see deviation for depth of bury in Part 6, provide flow fill over sewer that does not meet Lehi City minimum depth of cover of 4-feet. Line new manholes with Structure Guard, Raven or similar material approved by Lehi City. Provide 15-foot-wide maintenance road for sewer facilities with 2% maximum cross slope and 10% maximum longitudinal slope. Provide 32" precast barrier protection where side slope is steeper than 5:1. Provide asphalt pavement for first 20 feet of maintenance road entrance and exit to frontage road. Provide 10 inches of untreated base course for remainder of maintenance road. Access road must meet Lehi City Standard Drawing Road-14.

xi. **2100 N and 2300 W:** If the irrigation and water crossing 2100 N are impacted or require relocation, provide steel casings and Class 350 ductile iron pipe with joint restraints within the casing.

xii. **Slipstream and I-15:** Extension of water and irrigation casings require relocating existing vertical bends.

xiii. **Thanksgiving Way and 2100 N Eastbound Frontage Road:** reconstruct detention basin and associated storm drainage facilities.

d. UDOT will secure permits required for Third-Party Work.

e. UDOT will notify the City at least **2 business days** in advance of beginning any Third-Party Work covered by any Supplemental Agreements, to allow the City time to schedule an inspector to be present during the Third-Party Work. Subsequent notification of when and where Third-Party Work will be performed will be given on a day-to-day basis.

8. **RIGHT-OF-WAY**

The Third-Party shall submit to UDOT all conveyances, vesting documents, or other evidence of title to real property related to the potential relocation of Facilities as early as possible.

Any easements or replacement right-of-way required in conjunction with the Third-Party Work will be acquired by UDOT in accordance with the requirements of Utah Administrative Code R930-8.

9. **BETTERMENT WORK**

If the City desires to include betterment work in the Project at any specific location, UDOT may agree to the betterment work provided the difference in costs between the functionally equivalent required Third-Party Work and the City's desired betterment work shall be at the sole cost of the City, and the betterment work can reasonably be accommodated without delaying the Project. UDOT has the sole discretion to determine whether the betterment work will be included in the Project. Betterment work, including details and costs for accommodating the betterment work, will be addressed by a separate local government betterment agreement between UDOT and the City.

The City has requested water and irrigation betterment work be added to the Project as described in attached Exhibit "C". City will have 2 weeks to review and approve betterment cost within two weeks of receipt. If the City does not respond within two weeks' time or does not accept the betterment cost, the betterment will be eliminated from the Project Work. Upon City acceptance of the betterment cost, the City and UDOT will enter into a Supplemental Agreement detailing approved betterment cost and the City will be invoiced for the betterment.

10. **SUPPLEMENTAL AGREEMENTS**

UDOT and the City shall enter into Supplemental Agreements to cover Third-Party Work at specific Project locations. UDOT will provide design plans and Third-Party Work schedules for review and approval by the City prior to start of the Third-Party Work. A copy of the format of the proposed Supplemental Agreement is marked Exhibit "D" that is incorporated by reference.

The City will review and provide comments within 2 weeks of receiving the agreement. Third-Party will process for signature, approved final Supplemental Agreement **within 2 weeks**.

In the event there are changes in the scope of the Third-Party Work, extra Third-Party Work, or changes in the planned Third-Party Work covered by a Supplemental Agreement, a modification to the Supplemental Agreement approved in writing by the Parties is required prior to the start of Third-Party Work on the changes or additions.

11. CITY TO NOTIFY UDOT

The City's personnel shall notify UDOT's Field Representative upon arriving and leaving the Project site for verification of inspecting Third-Party Work. City's personnel will comply with all applicable OSHA and Project safety requirements while within the Project limits.

12. INSPECTION

The City shall provide on-call engineering support by the City engineer or appropriate representative for design review, schedule coordination, or to correct or

clarify issues during Third-Party Work, and to perform the necessary inspection on the Facilities installed by UDOT.

a. The City engineer and/or inspector shall work with and through UDOT's Project and Field Representative and shall give no orders directly to UDOT's Design-Builder unless authorized in writing to do so. UDOT will accomplish the Third-Party Work on Facilities in accordance with the plans and specifications provided and/or approved by the City including changes or additions to the plans and specifications, which are approved by the Parties hereto.
b. The City shall immediately notify UDOT's Project and Field Representative of any deficiencies in the Third-Party Work on the Facilities. The City shall follow up with written detail to UDOT's Project and Field Representative of its findings within 24-hours of making its initial notification.
c. UDOT will respond to City's concerns within 24-hours of written notification.
d. The City, through its inspection of the Third-Party Work, will provide UDOT's Project and Field Representative with information covering any problems or concerns the City may have with acceptance of the facilities upon completion of the Third-Party Work.
e. Any periodic plan and specification review or construction inspection performed by UDOT arising out of the performance of the Third-Party Work does not relieve the City of its duty in the performance of the Third-Party Work or to ensure compliance with acceptable standards.

13. DAILY RECORDKEEPING

UDOT and the City will each keep daily records of onsite activities. The City's daily records will be completed on a form that has been preapproved by UDOT.'s Contracts, Compliance and Certification Manager. The daily records shall be signed by UDOT's Field Representative or their authorized representatives and by the City or its

authorized representatives. Copies of the daily records shall be retained by the Parties to this Agreement.

14. **REIMBURSEMENT**

UDOT will not reimburse the City for costs incurred by City personnel for design review, observation, inspection, and operation of valves performed as part of their regularly assigned duties. Should it become necessary for the City to procure outside professional services to perform design review, observation, or inspection to accommodate the Third-Party Work and Project schedule, the City shall notify UDOT. Upon concurrence by UDOT, a Supplemental Agreement for the cost of the services will be executed at which time the City may procure outside services through appropriate procurement. The City shall determine any need for outside professional services prior to providing estimates and include these costs in the estimates. UDOT will not reimburse for any testing, as UDOT will perform the required testing.

15. **SUBMITTAL OF ITEMIZED BILLS**

The City shall submit itemized bills covering the actual costs incurred for outside services to perform design review, oversight, and inspection work covered by Supplemental Agreements to:

UDOT Contracts and Compliance Specialist
constructionpayments@utah.gov
or hard copy mailed to
4501 South 2700 West
Construction Office, Box 148220
Salt Lake City, Utah 84114-8220

Itemized bills shall bear the Project number, Supplemental Agreement number, supporting sheets, and a complete billing statement of all actual costs incurred, following the order of the items in the detailed estimates contained in the Supplemental Agreement and be submitted to UDOT within **6 months** following completion of outside services by the City on the Project. Otherwise, previous payments to the City may be considered final, except as agreed to between the Parties in advance.

UDOT will reimburse the City within **60 days** after receipt of the billings, but only for items complying fully with the provisions of Utah Administrative Code R930-8. Failure on the part of the City to submit final billings within **6 months** of the completion of outside services will result in UDOT's disallowance of that portion of outside services performed by the City.

16. **SALVAGED MATERIALS**

All materials from existing Facilities which are recovered by UDOT while performing the Third-Party Work and not reused on this Project shall become the property of the Design-Builder unless otherwise agreed to in advance by the Parties hereto.

17. **RIGHT TO AUDIT**

UDOT and the Federal Highway Administration shall have the right to audit all cost records and accounts of the City pertaining to this Project in accordance with the auditing procedure of the Federal Highway Administration and 23 C.F.R. § 645, subpart A. Should this audit disclose that the City has been underpaid, the City will be reimbursed by UDOT within **60 days** upon submission of additional billing to cover the underpayment. Should this audit disclose that the City has been overpaid, the City will reimburse UDOT within **60 days** of notification of audit findings in the amount of the overpayment. For purpose of audit the City is required to keep and maintain its records of outsides services covered herein for a minimum of 3 years after final payment is received by the City from UDOT.

18. **ACCEPTANCE AND MAINTENANCE**

UDOT will provide notification to the City for acceptance of the Third-Party Work upon completion of the final inspection. City will have **60 days** to respond in writing to UDOT with any additional comments in regards to the Third-Party Work. After 60 days the City accepts the Third-Party Work. Upon completion of the Third-Party Work of Facilities by UDOT, the City will accept, own, and maintain Facilities. The City shall be the sole owner of the Facilities upon completion of the Project unless otherwise agreed to by the Parties. To the extent it may lawfully do so, City further agrees to relieve UDOT

from any responsibility or liability that may result from its new Facilities or the operation thereof.

19. **ACCESS FOR MAINTENANCE**

Access for maintenance and servicing of Facilities located on the right-of-way of the Project will be allowed only by permit issued by UDOT. The City will obtain the permit and abide by conditions thereof for policing and other controls in conformance with Utah

Administrative Code R930-7. If access during the Project is needed, the City shall coordinate access with the UDOT Resident Engineer.

20. **INDEMNIFICATION**

UDOT and the City are both governmental entities subject to the Governmental Immunity Act. Each Party agrees to indemnify, defend, and save harmless the other

from and against all claims, suits and costs, including attorneys' fees for injury or damage of any kind, arising out of its negligent acts, errors or omissions of its officers, agents, contractors or employees in the performance of this Agreement, and from and against all claims, suits, and costs, including attorneys' fees for injury or damage of any kind. Nothing in this paragraph is intended to create additional rights to third parties or to waive any of the provisions of the Governmental Immunity Act. The obligation to indemnify is limited to the dollar amounts set forth in the

Governmental Immunity Act, provided the Act applies to the action or omission giving rise to the protections in this paragraph. The indemnification in this paragraph shall survive the expiration or termination of this Agreement.

21. **MISCELLANEOUS**

a. Each Party agrees to undertake and perform all further acts that are reasonably necessary to carry out the intent and purpose of this Agreement at the request of the other Party.
b. This Agreement in no way creates any type of agency relationship, joint venture, or partnership between UDOT and City.
c. The failure of either Party to insist upon strict compliance of any of the terms and conditions, or failure or delay by either Party to exercise any rights or remedies provided in this Agreement, or by law, will not release either Party from any obligations arising under this Agreement.
d. This Agreement shall be deemed to be made under and shall be governed by the laws of the State of Utah in all respects. Each person signing this Agreement warrants that the person has full legal capacity, power and authority to execute this Agreement for and on behalf of the respective Party and to bind such Party. This Agreement may be executed in one or more counterparts, each of which shall be an original, with the same effect as if the signatures were made upon the same instrument. This Agreement may be delivered by facsimile or electronic mail.
e. If any provision or part of a provision of this Agreement is held invalid, illegal or unenforceable in any respect, such invalidity, illegality or unenforceability shall not affect any other provision. Each provision shall be deemed to be enforceable to the fullest extent under applicable law.
f. This Agreement may be executed in one or more counterparts, each of which shall be an original, with the same effect as if the signatures were made upon the same instrument. This Agreement may be delivered by facsimile or electronic mail.
g. This Agreement shall constitute the entire agreement and understanding of the Parties with respect to the subject matter hereof, and shall supersede all offers, negotiations and other agreements with respect thereto. Any amendment to this Agreement must be in writing and executed by authorized representatives of each Party.
h. The date of this agreement is the date this agreement is signed by the last Party.

IN WITNESS WHEREOF, the parties hereto have caused these presents to be executed by their duly authorized officers.

ATTEST:

Lehi City

_____ _____

Title: _____ **Title:** _____

Date: _____ **Date:** _____

(IMPRESS SEAL)

. . . . . .

Recommended For Approval:

_____

Title: Utility and Railroad Leader

Date: _____

Utah Department of Transportation

_____

Title: Project Director

Date: _____

Comptroller Office

_____

Title: Contract Administrator

Date: _____

EXHIBIT A

BMP: Benching — BE

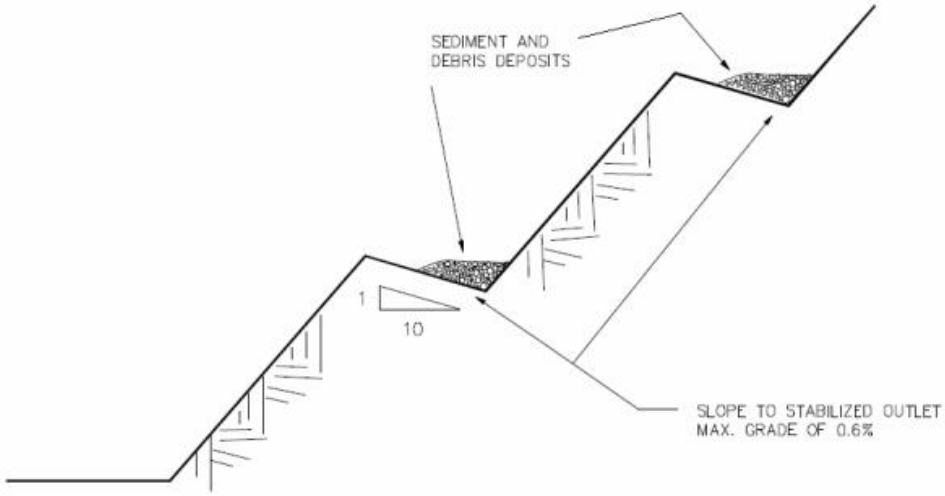

Description:

Slope construction with benches spaced at regular intervals perpendicular to the slope which intercept and collect sheet flow and direct it to a stable outfall point.

Application:

- Unstabilized cut and fill slopes
- Large stockpiles
- Existing unstable slopes

Installation / Application Criteria:

- Benches should be formed as slope in constructed and graded to the outlet point
- Stabilized outlet with sediment controls should be in place prior to slope construction

Limitations:

- Construction slope design must accommodate benching
- Not appropriate for sandy or rocky soil
- Only effective if suitable outlet provide

Maintenance:

- Inspect after major storm events and at least biannually; repair damaged areas
- Remove debris blocking water flow
- Inspect outlet, repair/replace sediment controls and remove sediment build up

Objectives

☐ Housekeeping Practices
☐ Contain Waste
☐ Minimize Disturbed Areas
☒ Stabilize Disturbed Areas
☒ Protect Slopes/Channels
☐ Control Site Perimeter
☐ Control Internal Erosion

Targeted Pollutants

	H	M	L
Sediment	☒	☐	☐
Nutrients	☐	☐	☒
Heavy Metals	☐	☐	☒
Toxic Materials	☐	☐	☒
Oil & Grease	☐	☐	☒
Floatable Materials	☐	☒	☐
Bacteria & Viruses	☐	☐	☒
Other Waste	☐	☐	☒

Implementation Requirements

	H	M	L
Capital Costs	☐	☒	☐
O&M Costs	☐	☐	☒
Maintenance	☐	☒	☐
Training	☐	☐	☒
Staffing	☐	☐	☒
Administrative	☐	☐	☒

H=High **M**=Medium **L**=Low

LEHI CITY
PIONEERING UTAH'S FUTURE

153 North 100 East
Lehi, UT 84043

Materials Adapted from Salt Lake County Engineering Division Guidance Document and Other Sources

EXHIBIT A

BMP: Brush or Rock Filter — BRF

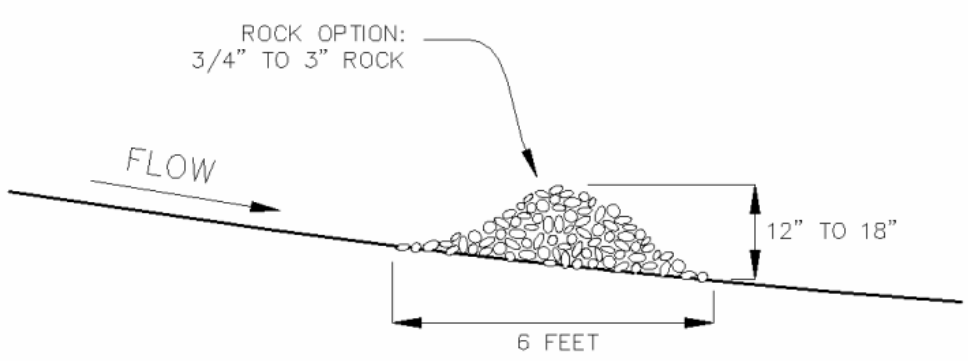

Description:

A rock filter is made of rock ¾" – 3" in diameter and placed along a level contour. A brush filter is composed of brush (usually obtained during the site cleaning) wrapped in filter cloth and anchored to the toe of the slope. If properly anchored brush or rock filters may be used for sediment trapping and velocity reduction.

Application:

- As check dams across mildly sloped construction roads
- Below the toe of slopes
- Along the site perimeter
- In areas where sheet flow occurs
- Around temporary spoil areas
- At sediment traps or culvert/pipe outlets

Installation / Application Criteria:

- If placed where concentrated flows occur, use larger rock and place in a staked, woven wire sheathing
- Install along a level contour
- Leave area behind berm where runoff can pond and sediment can settle
- Drainage areas should not exceed 5 acres

Limitations:

- Rock berms may be difficult to remove
- Removal problems limit their usefulness in landscaped areas
- Runoff will pond upstream of the filter, possibly causing flooding if sufficient space does not exist

Maintenance:

- Inspect after each rainfall and at a minimum of once every two weeks
- If berm is damaged, reshape and replace lost/dislodged rock
- Remove sediment when depth reaches 1/3 of berm height or 1 ft

Objectives

☐ Housekeeping Practices
☐ Contain Waste
☐ Minimize Disturbed Areas
☐ Stabilize Disturbed Areas
☒ Protect Slopes/Channels
☒ Control Site Perimeter
☒ Control Internal Erosion

Targeted Pollutants

	H	M	L
Sediment	☒	☐	☐
Nutrients	☐	☐	☒
Heavy Metals	☐	☐	☒
Toxic Materials	☐	☐	☒
Oil & Grease	☐	☐	☒
Floatable Materials	☐	☐	☒
Bacteria & Viruses	☐	☐	☒
Other Waste	☐	☐	☒

Implementation Requirements

	H	M	L
Capital Costs	☒	☐	☐
O&M Costs	☐	☒	☐
Maintenance	☐	☐	☒
Training	☐	☐	☒
Staffing	☐	☐	☒
Administrative	☐	☐	☒

H=High **M**=Medium **L**=Low

LEHI CITY

153 North 100 East
Lehi, UT 84043

Materials Adapted from Salt Lake County Engineering Division Guidance Document and Other Sources

EXHIBIT A

BMP: Catch Basin Cleaning — CBC

Description:

Maintain catch basins and stormwater inlets on a regular basis to remove pollutants, reduce high pollutant concentrations during the first flush of storms, prevent clogging of the downstream conveyance system, and restore the catch basin's sediment trapping capacity. A catch basin is distinguished from a stormwater inlet by having at its base a sediment sump designed to catch and retain sediments below the overflow point. This information sheet focuses on the cleaning of accumulated sediments from catch basins.

Approach:

Regular maintenance of catch basins and inlets is necessary to ensure their proper functioning. Clogged catch basins are not only useless but may act as a source of sediments and pollutants. In general, the keys to effective catch basins are:

- Inspect annually at a minimum
- Prioritize maintenance to clean catch basins and inlets with the highest pollutant loading most frequently
- Clean catch basins in high pollutant load areas just before the wet season to remove sediments and debris accumulated during the summer
- Keep accurate logs of the number of catch basins cleaned
- Record the amount of waste collected

Limitations:

There are no major limitations to this best management practice.

Maintenance:

Regular maintenance of public and private catch basins and inlets is necessary to ensure their proper functioning. Clogged catch basins are not only useless but may act as a source of sediments and pollutants. In general, they keys to effective catch basins are:

- Inspect annually at a minimum to ensure systems are properly maintained
- Keep logs of the number of catch basins cleaned
- Record the amount of waste collected

Objectives

☒ Housekeeping Practices
☐ Contain Waste
☐ Minimize Disturbed Areas
☐ Stabilize Disturbed Areas
☐ Protect Slopes/Channels
☐ Control Site Perimeter
☐ Control Internal Erosion

Targeted Pollutants

	H	M	L
Sediment	☒	☐	☐
Nutrients	☐	☒	☐
Heavy Metals	☒	☐	☐
Toxic Materials	☐	☐	☒
Oil & Grease	☐	☒	☐
Floatable Materials	☐	☒	☐
Bacteria & Viruses	☐	☐	☒
Other Waste	☐	☒	☐

Implementation Requirements

	H	M	L
Capital Costs	☐	☒	☐
O&M Costs	☒	☐	☐
Maintenance	☐	☐	☐
Training	☐	☒	☐
Staffing	☒	☐	☐
Administrative	☐	☒	☐

H=High **M**=Medium **L**=Low

LEHI CITY

153 North 100 East
Lehi, UT 84043

Materials Adapted from Salt Lake County Engineering Division Guidance Document and Other Sources

EXHIBIT A

BMP: Check Dams — CD

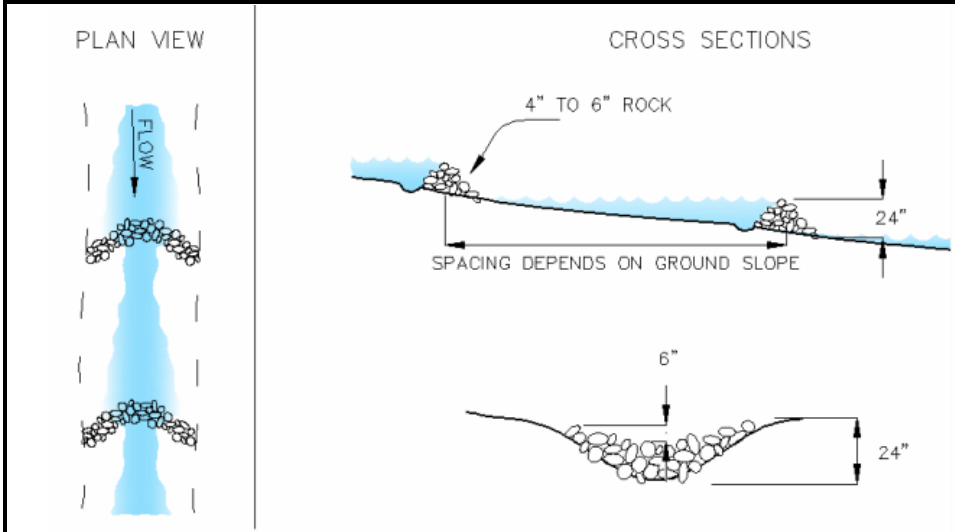

Description:

Small, temporary dams constructed across a drainage ditch to reduce velocity of concentrated storm water flows thereby reducing the erosion of the ditch.

Application:

- Temporary drainage paths
- Permanent drainage ways not yet stabilized
- Existing drainage paths receiving increased flows due to construction

Installation / Application Criteria:

- Prepare location of dam by removing any debris and rough grading any irregularities in channel bottom
- Place rocks by hand or with appropriate machinery; do not dump
- Space dams to make the base of the upstream dam the same elevation as the top of the next lower dam
- Construct dam with center lower to create a weir effect
- Construct 50% side slopes on dams

Limitations:

- Maximum recommended drainage area is 10 acres
- Maximum recommended height is 24"
- Do not use in running streams

Maintenance:

- Inspect dams daily during prolonged rainfall, after each major rain event, and at a minimum of once every two weeks
- Remove any large debris and repair any damage to dam, channel, or sideslopes
- Remove accumulated sediment when it reaches one half the height of the dam

Objectives

☐ Housekeeping Practices
☐ Contain Waste
☐ Minimize Disturbed Areas
☒ Stabilize Disturbed Areas
☒ Protect Slopes/Channels
☐ Control Site Perimeter
☐ Control Internal Erosion

Targeted Pollutants

H	M	L	
☒	☐	☐	Sediment
☐	☐	☒	Nutrients
☐	☐	☒	Heavy Metals
☐	☐	☒	Toxic Materials
☐	☐	☒	Oil & Grease
☐	☐	☒	Floatable Materials
☐	☐	☒	Bacteria & Viruses
☐	☐	☒	Other Waste

Implementation Requirements

H	M	L	
☐	☒	☐	Capital Costs
☐	☐	☒	O&M Costs
☐	☒	☐	Maintenance
☐	☐	☒	Training
☐	☐	☒	Staffing
☐	☐	☒	Administrative

H=High **M**=Medium **L**=Low

LEHI CITY
PIONEERING UTAH'S FUTURE

153 North 100 East
Lehi, UT 84043

Materials Adapted from Salt Lake County Engineering Division Guidance Document and Other Sources

EXHIBIT A

BMP: Contaminated or Erodible Surface Areas — CESA

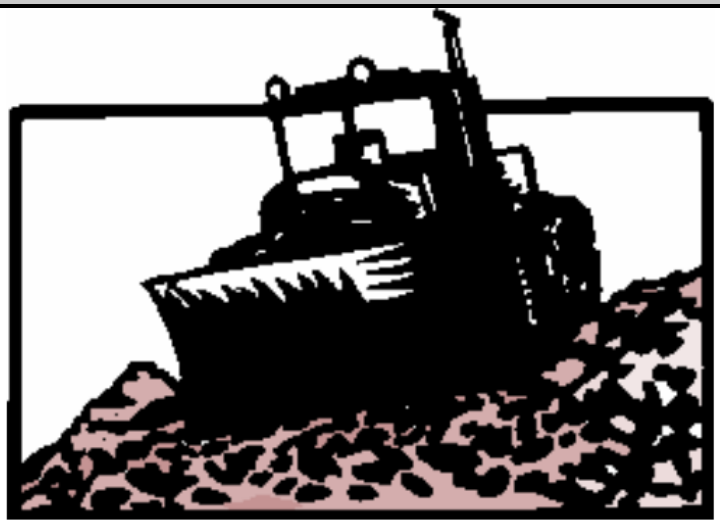

Description:

Prevent or reduce the discharge of pollutants to storm water from contaminated or erodible surface areas by leaving as much vegetation on-site as possible, minimizing soil exposure time, stabilizing exposed soils, and preventing storm water runon and runoff.

Application:

This BMP addresses soils which are not so contaminated as to exceed criteria, but the soil is eroding and carrying pollutants off in the storm water.

Installation / Application Criteria:

Contaminated or erodible surface areas can be controlled by:

- Preservation of natural vegetation, revegetation, chemical stabilization, removal of contaminated soils, or geosynthetics

Limitations:

Disadvantages of preserving natural vegetation or re-vegetating include:

- Requires substantial planning to preserve and maintain the existing vegetation
- May not be cost-effective with high land costs
- Lack of rainfall and/or poor soils may limit the success of re-vegetated areas

Disadvantages of chemical stabilization include:

- Creation of impervious surfaces
- May cause harmful effects on water quality
- Is usually more expensive that vegetative cover

Maintenance:

Maintenance should be minimal, except possibly if irrigation of vegetation is necessary

Objectives

☒ Housekeeping Practices
☐ Contain Waste
☐ Minimize Disturbed Areas
☐ Stabilize Disturbed Areas
☐ Protect Slopes/Channels
☐ Control Site Perimeter
☐ Control Internal Erosion

Targeted Pollutants

	H	M	L
Sediment	☒	☐	☐
Nutrients	☒	☐	☐
Heavy Metals	☒	☐	☐
Toxic Materials	☒	☐	☐
Oil & Grease	☒	☐	☐
Floatable Materials	☒	☐	☐
Bacteria & Viruses	☒	☐	☐
Other Waste	☒	☐	☐

Implementation Requirements

	H	M	L
Capital Costs	☐	☒	☐
O&M Costs	☐	☒	☐
Maintenance	☐	☐	☒
Training	☐	☐	☒
Staffing	☐	☐	☒
Administrative	☐	☐	☒

H=High **M**=Medium **L**=Low

LEHI CITY

153 North 100 East
Lehi, UT 84043

Materials Adapted from Salt Lake County Engineering Division Guidance Document and Other Sources

EXHIBIT A

BMP: Construction Road Stabilization — CR

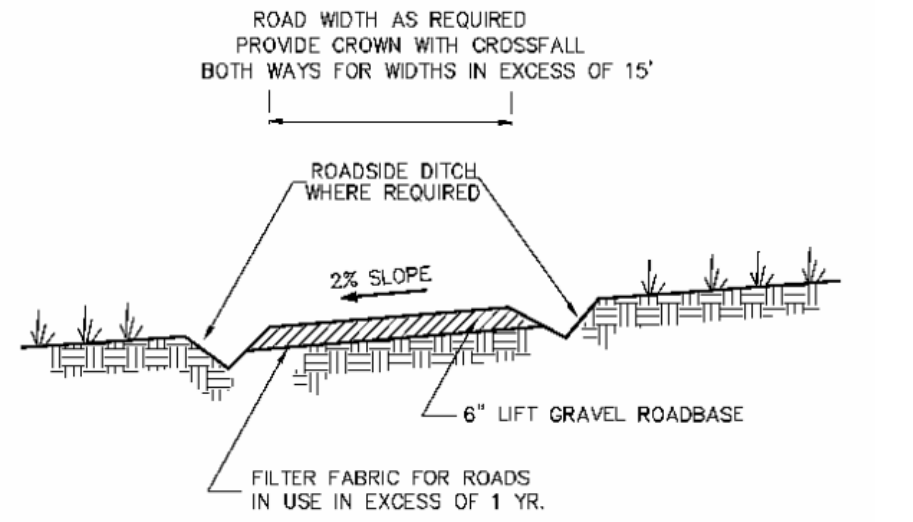

Description:

Temporary stabilization of on-site roadway by placement of gravel roadbase

Application:

- On-site roadways used daily by construction traffic (may not apply to gravelly type soils)
- Parking or staging areas susceptible to erosion due to traffic use

Installation / Application Criteria:

- Grade temporary access roads with 2% cross fall. For two-way width provide crown
- Provide roadside ditch and outlet controls where required
- Place 6 inches of 2-inch to 4-inch crushed rock on driving area

Limitations:

- May require removal of gravel roadbase at completion of activities if final cover is not impervious
- May require controls for surface storm water runoff

Maintenance:

- Inspect after major rainfall events and at a minimum of once every two weeks
- Place additional gravel as needed and repair any damaged areas
- Maintain any roadside drainage controls

Objectives

☒ Housekeeping Practices
☐ Contain Waste
☒ Minimize Disturbed Areas
☒ Stabilize Disturbed Areas
☒ Protect Slopes/Channels
☐ Control Site Perimeter
☐ Control Internal Erosion

Targeted Pollutants

H M L
☒☐☐ Sediment
☐☐☒ Nutrients
☐☐☒ Heavy Metals
☐☐☒ Toxic Materials
☐☐☒ Oil & Grease
☐☐☒ Floatable Materials
☐☐☒ Bacteria & Viruses
☐☐☒ Other Waste

Implementation Requirements

H M L
☐☒☐ Capital Costs
☐☒☐ O&M Costs
☐☒☐ Maintenance
☐☐☒ Training
☐☐☒ Staffing
☐☐☒ Administrative

H=High **M**=Medium **L**=Low

LEHI CITY
PIONEERING UTAH'S FUTURE

153 North 100 East
Lehi, UT 84043

Materials Adapted from Salt Lake County Engineering Division Guidance Document and Other Sources

EXHIBIT A

BMP: Curb Sedimentation Trap — CST

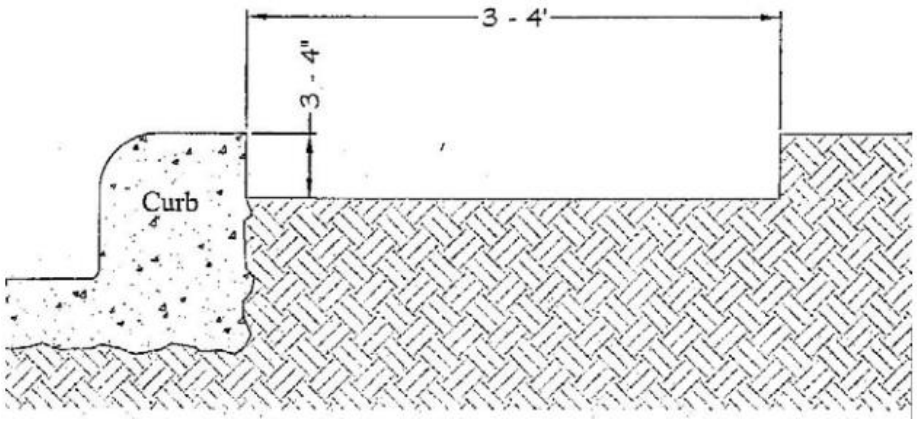

Description:

A temporary sediment trap formed by excavation behind the curb.

Application:

- Interception of runoff containing sediment from the lot during construction
- Retain sediment on the lot during construction

Installation / Application Criteria:

- Excavate soil behind the curb to a depth of 3-4 inches
- Extend excavation 3-4 feet behind the curb to form sediment trap

Limitations:

No limitations

Maintenance:

- Inspect after each rainfall event and at a minimum of once every two weeks
- Remove accumulated sediment as it reaches 2/3 height of available storage
- May require additional excavation if dirt from construction fills in the trap

Objectives

☐ Housekeeping Practices
☐ Contain Waste
☐ Minimize Disturbed Areas
☐ Stabilize Disturbed Areas
☐ Protect Slopes/Channels
☒ Control Site Perimeter
☒ Control Internal Erosion

Targeted Pollutants

	H	M	L
Sediment	☒	☐	☐
Nutrients	☐	☐	☒
Heavy Metals	☐	☐	☒
Toxic Materials	☐	☒	☐
Oil & Grease	☐	☐	☒
Floatable Materials	☐	☒	☐
Bacteria & Viruses	☐	☐	☒
Other Waste	☐	☐	☒

Implementation Requirements

	H	M	L
Capital Costs	☐	☒	☐
O&M Costs	☐	☐	☒
Maintenance	☐	☒	☐
Training	☐	☐	☒
Staffing	☐	☐	☒
Administrative	☐	☐	☒

H=High **M**=Medium **L**=Low

LEHI CITY
PIONEERING UTAH'S FUTURE

153 North 100 East
Lehi, UT 84043

Materials Adapted from Salt Lake County Engineering Division Guidance Document and Other Sources

EXHIBIT A

BMP: Constructed Wetlands — CW

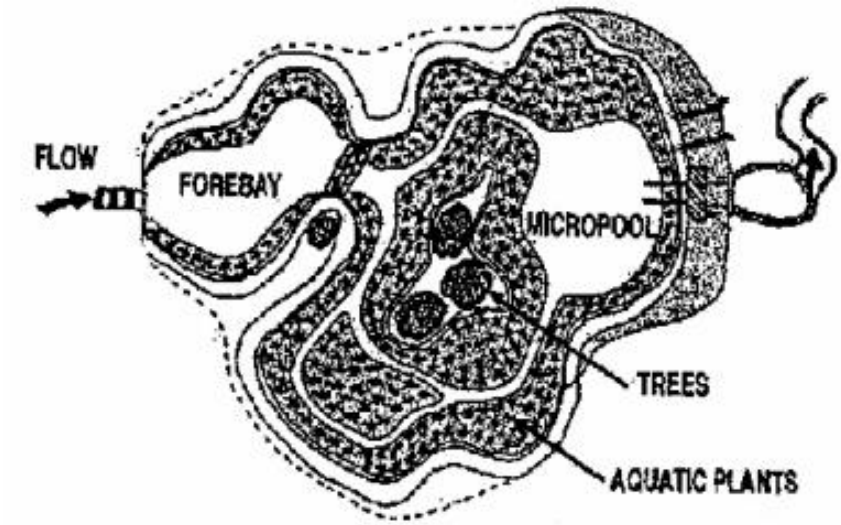

Description:

Constructed wetlands have a significant percentage of the facility covered by wetland vegetation.

Application:

- Use in areas that need to achieve high level of particulate and some dissolved contaminant removal
- Ideal for large, regional tributary areas
- Multiple benefits of passive recreation and wildlife

Installation / Application Criteria:

- Suitable soils for wetland vegetation are required
- Surface area equal to at least 1% and preferable 2% of the tributary watershed.
- Involve a qualified wetland ecologist to design and install wetland vegetation
- Establishing wetland vegetation may be difficult

Limitations:

- Concern for mosquitos
- Cannot be place on steep unstable slopes
- Need base flow to maintain water levels
- Not feasible in densely developed areas
- Nutrient release may occur during winter
- Overgrowth can lead to reduced hydraulic capacity
- Regulatory agencies may limit water quality to constructed wetlands

Maintenance:

- Remove foreign debris and sediment build-up
- Areas of bank erosion should be repaired
- Remove nuisance species
- Control mosquitos

Objectives

☐ Housekeeping Practices
☐ Contain Waste
☐ Minimize Disturbed Areas
☒ Stabilize Disturbed Areas
☒ Protect Slopes/Channels
☐ Control Site Perimeter
☒ Control Internal Erosion

Targeted Pollutants

	H	M	L
Sediment	☒	☐	☐
Nutrients	☒	☐	☐
Heavy Metals	☒	☐	☐
Toxic Materials	☒	☐	☐
Oil & Grease	☒	☐	☐
Floatable Materials	☒	☐	☐
Bacteria & Viruses	☐	☒	☐
Other Waste	☐	☒	☐

Implementation Requirements

	H	M	L
Capital Costs	☒	☐	☐
O&M Costs	☐	☒	☐
Maintenance	☐	☒	☐
Training	☐	☐	☒
Staffing	☐	☐	☒
Administrative	☐	☐	☒

H=High **M**=Medium **L**=Low

LEHI CITY
PIONEERING UTAH'S FUTURE

153 North 100 East
Lehi, UT 84043

Materials Adapted from Salt Lake County Engineering Division Guidance Document and Other Sources

EXHIBIT A

BMP: Concrete Waste Management — CWM

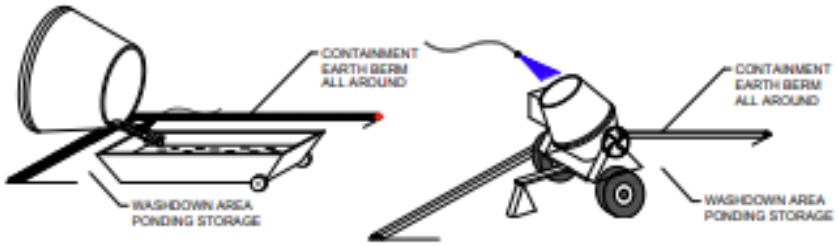

Option A — Option B

CONCRETE WASTE MANAGEMENT

Locate 50' from nearest inlet structure

Description:

Prevent or reduce the discharge of pollutants to storm water from concrete waste by conducting washout off-site, performing on-site washout in a designated area, and training employees and subcontractors.

Application:

This technique is applicable to all types of sites

Installation / Application Criteria:

- Store dry materials under cover, away from drainage areas
- Minimize excess mixing of fresh concrete, mortar or cement on site
- Perform washout of concrete trucks in designated areas located at least 50' from the nearest inlet structure
- Do not wash out concrete trucks into storm drains, open ditches, streets, or streams.
- Concrete, stucco, mortar, plaster, and grout rinse water must be contained in a rigid, leak proof container or leak proof lined pit designed so that no overflows can occur due to inadequate sizing or precipitation
- When washing concrete to remove fine particles and expose the aggregate, avoid creating runoff by draining the water within a bermed or level area (6" tall by 6" wide)
- Train employees and subcontractors in proper concrete waste management

Maintenance:

- Inspect subcontractors to ensure that concrete wastes are being properly managed
- Concrete washout containers must be emptied or replaced when they reach 75% of capacity

Objectives

☐ Housekeeping Practices
☒ Contain Waste
☐ Minimize Disturbed Areas
☐ Stabilize Disturbed Areas
☐ Protect Slopes/Channels
☐ Control Site Perimeter
☐ Control Internal Erosion

Targeted Pollutants

	H	M	L	
	☐	☐	☒	Sediment
	☐	☐	☒	Nutrients
	☐	☐	☒	Heavy Metals
	☒	☐	☐	Toxic Materials
	☐	☐	☒	Oil & Grease
	☐	☐	☒	Floatable Materials
	☐	☐	☒	Bacteria & Viruses
	☒	☐	☐	Other Waste

Implementation Requirements

	H	M	L	
	☐	☐	☒	Capital Costs
	☐	☐	☒	O&M Costs
	☐	☒	☐	Maintenance
	☐	☒	☐	Training
	☐	☐	☒	Staffing
	☐	☐	☒	Administrative

H=High **M**=Medium **L**=Low

LEHI CITY
PIONEERING UTAH'S FUTURE

153 North 100 East
Lehi, UT 84043

Materials Adapted from Salt Lake County Engineering Division Guidance Document and Other Sources

EXHIBIT A

BMP: Dust Controls — DC

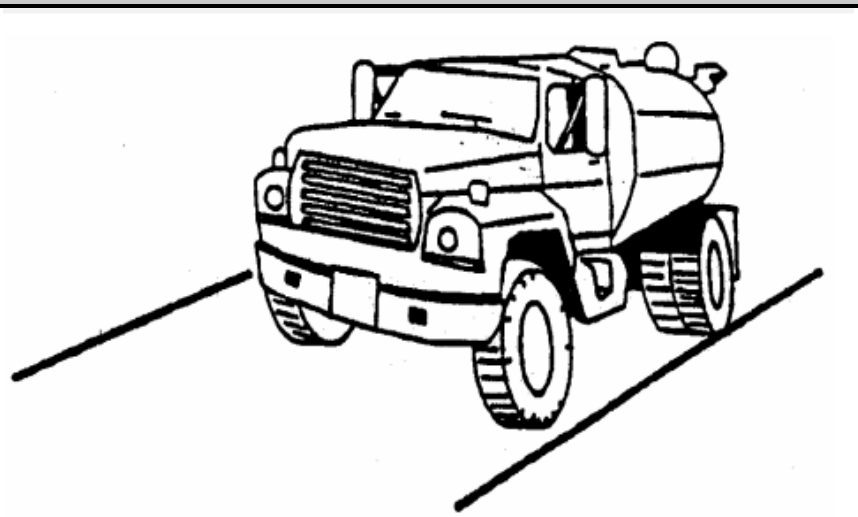

Description:

Dust control measures are used to stabilize soil from wind erosion and reduce dust from construction activities.

Application:

Dust control is useful in any process area, loading and unloading area, material handling area, or transfer area where dust is generated.

Installation / Application Criteria:

- Mechanical dust collection systems are designed according to the size of dust particles and the amount of air to be processed. Manufacturer's recommendations should be followed for installation (as well as the design of the equipment.
- Water used to control dust should be used sparingly to prevent non-storm water discharges
- Mechanical equipment should be operated according to the manufacturers' recommendations and should be inspected regularly.

Limitations:

- More elaborate equipment may be impossible to maintain by plant personnel
- Is labor and equipment intensive and may not be effective for all pollutants

Maintenance:

If water sprayers are used, dust-contaminated waters should be collected and taken for treatment. Areas will probably need to be resprayed to keep dust from spreading.

Objectives

☒ Housekeeping Practices
☐ Contain Waste
☐ Minimize Disturbed Areas
☒ Stabilize Disturbed Areas
☐ Protect Slopes/Channels
☐ Control Site Perimeter
☐ Control Internal Erosion

Targeted Pollutants

	H	M	L
Sediment	☒	☐	☐
Nutrients	☐	☐	☒
Heavy Metals	☐	☐	☒
Toxic Materials	☐	☐	☒
Oil & Grease	☐	☐	☒
Floatable Materials	☐	☐	☒
Bacteria & Viruses	☐	☐	☒
Other Waste	☐	☐	☒

Implementation Requirements

	H	M	L
Capital Costs	☐	☒	☐
O&M Costs	☐	☐	☒
Maintenance	☐	☒	☐
Training	☐	☒	☐
Staffing	☐	☐	☒
Administrative	☐	☐	☒

H=High **M**=Medium **L**=Low

LEHI CITY

153 North 100 East
Lehi, UT 84043

Materials Adapted from Salt Lake County Engineering Division Guidance Document and Other Sources

EXHIBIT A

BMP: Minimizing DCIAs — DCIA

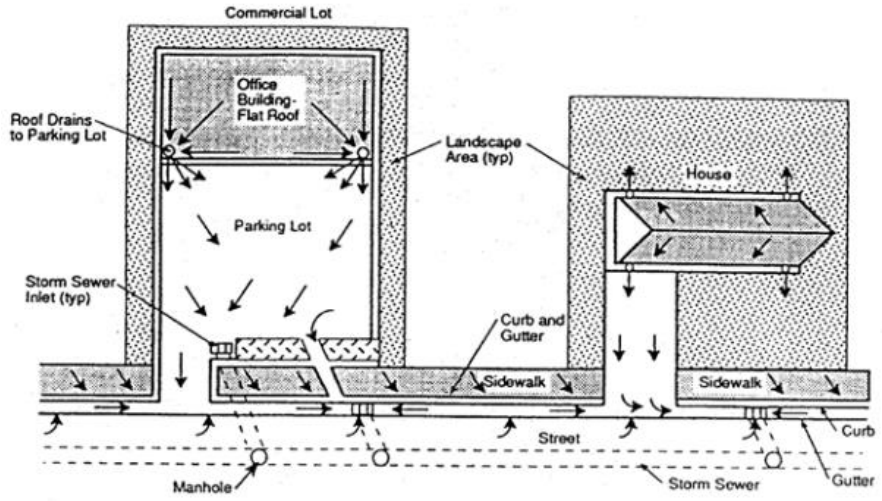

Description:

Minimizing directly connected impervious areas (DCIAs) is a structural BMP strategy that requires a basic change in drainage design philosophy. The basic principle is to direct stormwater runoff to landscaped areas, grass buffer strips, and vegetated swales to slow down the rate of runoff, reduce runoff volumes, attenuate peak flows, and encourage filtering and infiltration of stormwater.

Application:

Can be made an integral part of drainage planning for any development.

Installation / Application Criteria:

- Use on sites with general terrain slopes flatter that 3-4%
- Design the site drainage flowpath to maximize flow over vegetated areas before leaving a site
- Minimize ground slopes to limit erosion and slow down water flow
- Select vegetation that will not only survive, but also enhance water quality

Limitations:

- Potential increase in site open space requirements over the traditional development systems
- Introduction of a nonconventional development design strategy
- Infiltration of water near building foundations and parking lots is a concern
- Will likely result in increased maintenance along the swales

Maintenance:

- Maintain grass and other vegetation
- Pick up debris
- Conduct ongoing inspections for potential erosion problems and changes in drainage patterns
- Remove sediment buildup and replace damaged grass cover

Objectives

☐ Housekeeping Practices
☒ Contain Waste
☐ Minimize Disturbed Areas
☐ Stabilize Disturbed Areas
☐ Protect Slopes/Channels
☐ Control Site Perimeter
☐ Control Internal Erosion

Targeted Pollutants

H M L
☒☐☐ Sediment
☐☐☒ Nutrients
☐☒☐ Heavy Metals
☐☐☒ Toxic Materials
☐☐☒ Oil & Grease
☐☒☐ Floatable Materials
☐☐☒ Bacteria & Viruses
☐☐☒ Other Waste

Implementation Requirements

H M L
☐☒☐ Capital Costs
☐☒☐ O&M Costs
☐☒☐ Maintenance
☐☐☒ Training
☐☐☒ Staffing
☐☐☒ Administrative

H=High **M**=Medium **L**=Low

LEHI CITY
PIONEERING UTAH'S FUTURE

153 North 100 East
Lehi, UT 84043

Materials Adapted from Salt Lake County Engineering Division Guidance Document and Other Sources

EXHIBIT A

BMP: Diversion Dike — DD

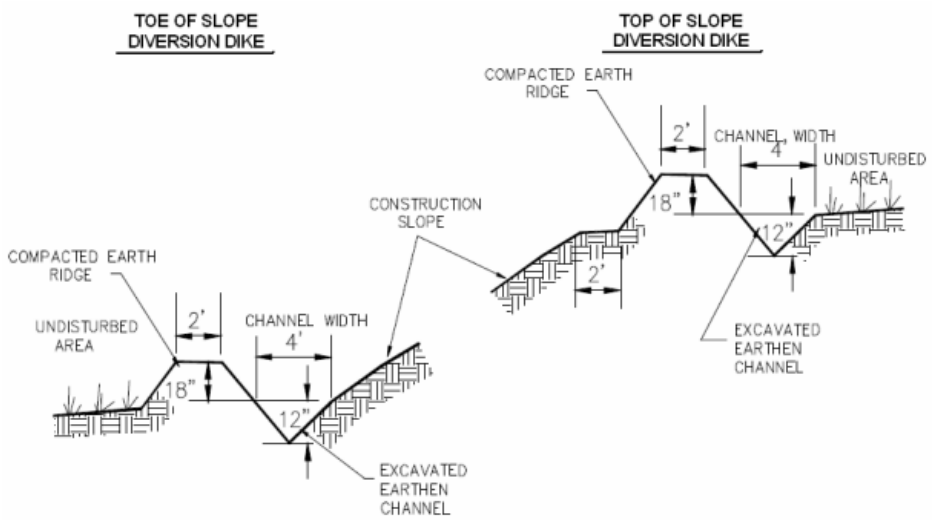

Description:

A temporary sediment barrier and storm runoff conveyance consisting of an excavation channel and compacted earth ridge.

Application:

- Construct along top of construction slope to intercept upgradient runoff and convey around construction site
- Construct along toe of construction to divert sediment laden runoff
- Construct along midpoint of construction slope to intercept runoff and channel to controlled discharge point
- Construct around base of soil stockpiles to capture sediment
- Construct around perimeter of disturbed areas to capture sediment

Installation / Application Criteria:

- Clear and grub area for dike construction
- Excavate channel and place soil on downgradient side
- Shape and machine compact excavated soil to form ridge
- Place erosion protection (riprap, mulch) at outlet
- Stabilize channel and ridge as required with mulch, gravel, or vegetative cover

Limitations:

- Recommended maximum drainage area of 5 acres
- Recommended maximum sideslopes of 2:1 (50%)
- Recommend maximum slope of 1% on channel

Maintenance:

- Inspect immediately after any rainfall and at least daily during prolonged rainfall
- Look for runoff breaching dike or eroding channel or sideslopes
- Check discharge point for erosion or bypassing of flows
- Repair and stabilize as necessary
- Inspect daily during vehicular activity on slope, check for and repair any traffic damage

Objectives

☐ Housekeeping Practices
☒ Contain Waste
☐ Minimize Disturbed Areas
☐ Stabilize Disturbed Areas
☒ Protect Slopes/Channels
☒ Control Site Perimeter
☒ Control Internal Erosion

Targeted Pollutants

H M L
☒☐☐ Sediment
☐☐☒ Nutrients
☐☐☒ Heavy Metals
☐☐☒ Toxic Materials
☐☐☒ Oil & Grease
☐☐☒ Floatable Materials
☐☐☒ Bacteria & Viruses
☐☐☒ Other Waste

Implementation Requirements

H M L
☐☒☐ Capital Costs
☐☐☒ O&M Costs
☐☒☐ Maintenance
☐☐☒ Training
☐☐☒ Staffing
☐☐☒ Administrative

H=High **M**=Medium **L**=Low

LEHI CITY

153 North 100 East
Lehi, UT 84043

Materials Adapted from Salt Lake County Engineering Division Guidance Document and Other Sources

EXHIBIT A

BMP: Detention Infiltration Device Maintenance — DIDM

Description:

Proper maintenance and siltation removal is required on both a routine and corrective basis to promote effective stormwater pollutant removal efficiencies for wet/dry detention pond and infiltrative devices.

Installation / Application Criteria:

- Remove silt after sufficient accumulation
- Periodically clean accumulated sediment and silt out of pre-treatment inlets
- Infiltration device silt removal should occur when the infiltration rate drops below ½ inch per hour
- Removal of accumulated paper, trash, and debris should occur every six months or as needed to prevent clogging of control devices
- Vegetation growth should not be allowed to exceed 18 inches in height
- Mow the slopes periodically and check for clogging, erosion, and tree growth on the embankment
- Corrective maintenance may require more frequent attention (as required)
- Create a public education campaign to explain the function of wet/dry detention ponds/infiltration device and their operation requirements for proper effectiveness
- Encourage the public to report wet/dry detention pond/infiltration devices needing maintenance

Limitations:

- Wet detention pond dredging can produce slurried waste that often exceeds the requirements of many landfills
- Frequent sediment removal is labor and cost intensive

Objectives

☒ Housekeeping Practices
☐ Contain Waste
☐ Minimize Disturbed Areas
☐ Stabilize Disturbed Areas
☐ Protect Slopes/Channels
☐ Control Site Perimeter
☐ Control Internal Erosion

Targeted Pollutants

	H	M	L	
	☒	☐	☐	Sediment
	☐	☒	☐	Nutrients
	☒	☐	☐	Heavy Metals
	☐	☐	☒	Toxic Materials
	☐	☐	☒	Oil & Grease
	☐	☐	☒	Floatable Materials
	☐	☒	☐	Bacteria & Viruses
	☐	☒	☐	Other Waste

Implementation Requirements

	H	M	L
Capital Costs	☐	☒	☐
O&M Costs	☒	☐	☐
Maintenance	☐	☐	☒
Training	☐	☐	☒
Staffing	☐	☒	☐
Administrative	☐	☐	☒

H=High **M**=Medium **L**=Low

LEHI CITY

153 North 100 East
Lehi, UT 84043

Materials Adapted from Salt Lake County Engineering Division Guidance Document and Other Sources

EXHIBIT A

BMP: Earth Berm Barrier — EBB

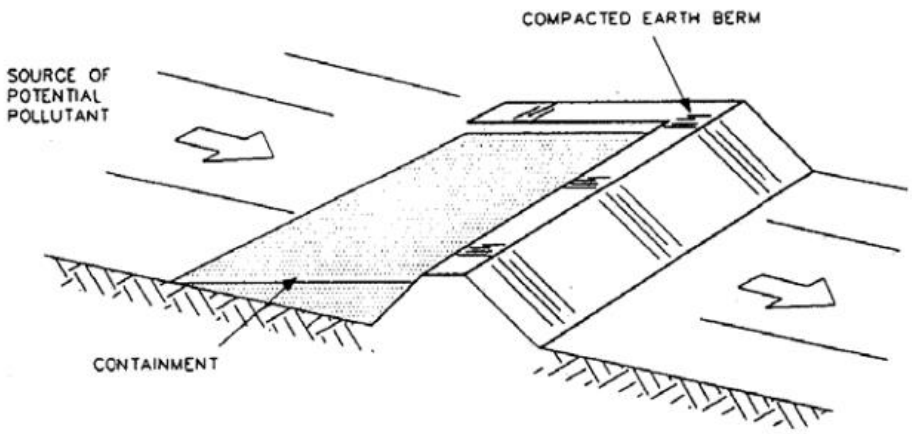

Description:

A temporary containment control constructed of compacted soil.

Application:

- Construct around waste materials storage area
- Construct around staging and maintenance areas
- Construct around vehicle parking and servicing areas

Installation / Application Criteria:

- Construct an earthen berm downhill of the area to be controlled. The berm should surround fueling facilities and maintenance areas on three sides to provide containment
- Berm needs to be sized for application and be compacted by compact equipment

Limitations:

- Not effective on steep slopes
- Limits access to controlled area
- Personnel need to quickly respond to spills with remedial actions

Maintenance:

- Observe daily for any non-stormwater discharge
- Look for runoff bypassing ends of berms or undercutting berms
- Repair or replace damaged areas of the berm and remove accumulated sediment
- Recompact soil around berm as necessary to prevent piping

Objectives

☐ Housekeeping Practices
☒ Contain Waste
☐ Minimize Disturbed Areas
☐ Stabilize Disturbed Areas
☐ Protect Slopes/Channels
☒ Control Site Perimeter
☐ Control Internal Erosion

Targeted Pollutants

H	M	L	
☐	☐	☒	Sediment
☐	☐	☒	Nutrients
☐	☐	☒	Heavy Metals
☒	☐	☐	Toxic Materials
☐	☐	☒	Oil & Grease
☒	☐	☐	Floatable Materials
☐	☐	☒	Bacteria & Viruses
☐	☐	☒	Other Waste

Implementation Requirements

H	M	L	
☐	☒	☐	Capital Costs
☐	☐	☒	O&M Costs
☐	☒	☐	Maintenance
☐	☐	☒	Training
☐	☐	☒	Staffing
☐	☐	☒	Administrative

H=High **M**=Medium **L**=Low

LEHI CITY
PIONEERING UTAH'S FUTURE
153 North 100 East
Lehi, UT 84043

Materials Adapted from Salt Lake County Engineering Division Guidance Document and Other Sources

EXHIBIT A

BMP: Erosion Control Blankets — ECB

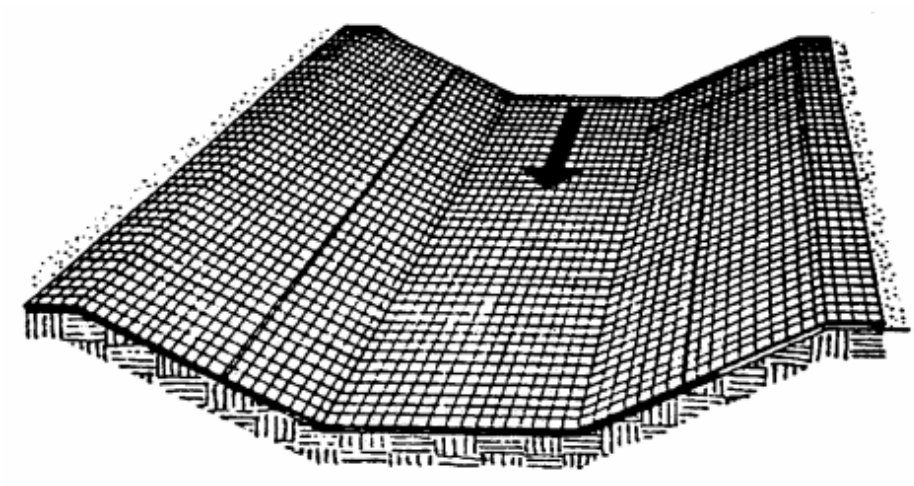

Description:

Erosion control blankets are used on areas of high velocity runoff and/or steep grade, to aid in controlling erosion on critical areas by protecting young vegetation.

Application:

- Where vegetation is likely to grow too slowly to provide adequate stabilization
- In areas subject to high winds where mulch would not be effective

Installation / Application Criteria:

- Install erosion control blankets parallel to the direction of the slope
- In ditches, apply in direction of the flow
- Place erosion control blankets loosely on soil – do not stretch
- Ends of blankets should be buried no less than six inches deep
- Staple the edges of the blanket at least every three feet – per manufacturers' specifications

Limitations:

- Not recommended in areas which are still under construction

Maintenance:

- Check for erosion and undermining periodically, particularly after rainstorms
- Repair dislocations or failures immediately
- If washouts occur, reinstall after repairing slope damage
- Monitor until permanently stabilized

Objectives

☐ Housekeeping Practices
☐ Contain Waste
☐ Minimize Disturbed Areas
☒ Stabilize Disturbed Areas
☒ Protect Slopes/Channels
☐ Control Site Perimeter
☐ Control Internal Erosion

Targeted Pollutants

	H	M	L
Sediment	☒	☐	☐
Nutrients	☐	☒	☐
Heavy Metals	☐	☐	☒
Toxic Materials	☐	☐	☒
Oil & Grease	☐	☐	☒
Floatable Materials	☐	☐	☒
Bacteria & Viruses	☐	☐	☒
Other Waste	☐	☐	☒

Implementation Requirements

	H	M	L
Capital Costs	☒	☐	☐
O&M Costs	☐	☒	☐
Maintenance	☐	☒	☐
Training	☐	☐	☒
Staffing	☐	☐	☒
Administrative	☐	☐	☒

H=High **M**=Medium **L**=Low

LEHI CITY

153 North 100 East
Lehi, UT 84043

Materials Adapted from Salt Lake County Engineering Division Guidance Document and Other Sources

EXHIBIT A

BMP: Equipment and Vehicle Wash Down Area — EVWA

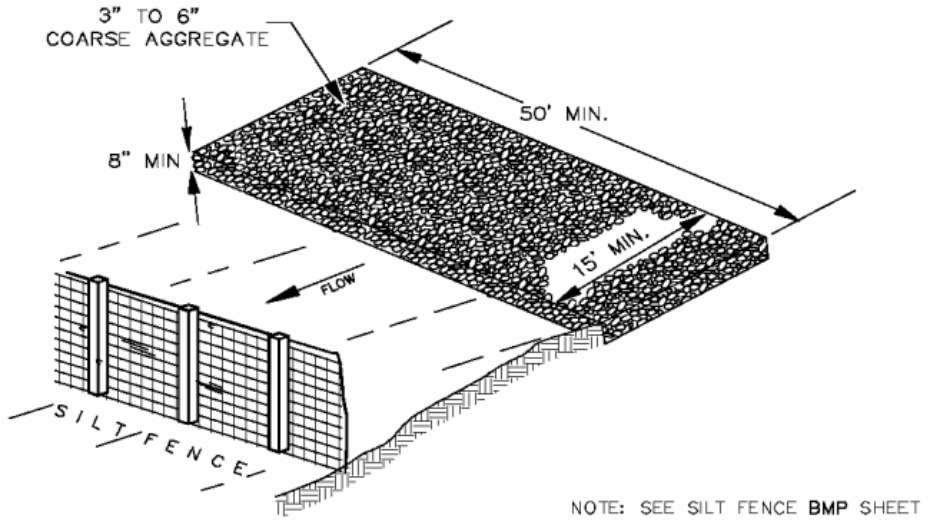

Description:

A stabilized pad of crushed stone for general washing of equipment and construction vehicles.

Application:

At any site where regular washing of vehicles and equipment will occur. May also be used as a filling point for water trucks to limit erosion caused by overflow or spillage of water.

Installation / Application Criteria:

- Clear and grub area and grade to provide maximum slope of 1%
- Compact subgrade and place filter fabric if desired (recommended for wash areas to remain in use for more than 3 months)
- Place coarse aggregate, 1 to 2-1/2 inches in size, to a minimum depth of 8 inches
- Install silt fence downgradient (see silt fence BMP information sheet)

Limitations:

Cannot be utilized for washing equipment or vehicles that may cause contamination of runoff such as fertilizer equipment or concrete equipment. Solely used to control sediment in wash water.

Maintenance:

- Inspect daily for loss of gravel or sediment buildup
- Inspect adjacent area for sediment deposits and install additional controls as necessary
- Repair area and replace gravel as required to maintain control in good working condition
- Expand stabilized area as required to accommodate activities
- Maintain silt fence as outlined in specific silt fence BMP information sheet

Objectives

☒ Housekeeping Practices
☒ Contain Waste
☐ Minimize Disturbed Areas
☐ Stabilize Disturbed Areas
☐ Protect Slopes/Channels
☐ Control Site Perimeter
☐ Control Internal Erosion

Targeted Pollutants

	H	M	L
Sediment	☒	☐	☐
Nutrients	☐	☐	☒
Heavy Metals	☐	☐	☒
Toxic Materials	☒	☐	☐
Oil & Grease	☒	☐	☐
Floatable Materials	☐	☐	☒
Bacteria & Viruses	☐	☐	☒
Other Waste	☐	☐	☒

Implementation Requirements

	H	M	L
Capital Costs	☐	☒	☐
O&M Costs	☐	☒	☐
Maintenance	☐	☒	☐
Training	☐	☐	☒
Staffing	☐	☐	☒
Administrative	☐	☐	☒

H=High **M**=Medium **L**=Low

LEHI CITY
PIONEERING UTAH'S FUTURE

153 North 100 East
Lehi, UT 84043

Materials Adapted from Salt Lake County Engineering Division Guidance Document and Other Sources

EXHIBIT A

BMP: Fiber Rolls — FR

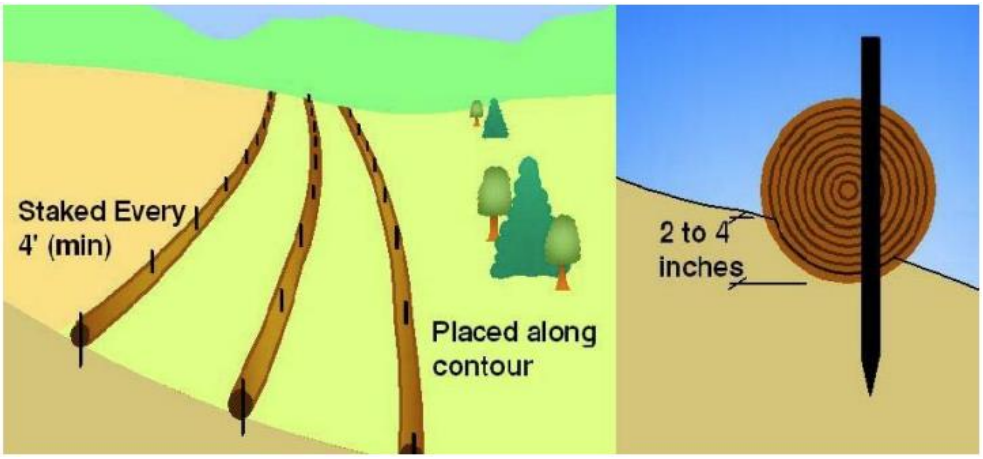

Description:

Commercial products can be made from various types of fibers and shavings that are rolled up and used as sediment barriers.

Application:

- Good for sites with long slopes, generally flatter that 10:1

Installation / Application Criteria:

- Must be trenches into the ground 2 to 4 inches
- Must be staked every 4 feet (maximum)
- Manufacturer's instructions must be followed for installation of product

Limitations:

- Not applicable for high velocity flows
- Only use for a time period within the expected lifespan of the product (Check with manufacturer)

Maintenance:

- Must be inspected regularly to ensure that runoff does not run under or bypass the fiber rolls
- Sediment buildup must also be checked, and excess sediment must be removed

Objectives

☐ Housekeeping Practices
☐ Contain Waste
☐ Minimize Disturbed Areas
☐ Stabilize Disturbed Areas
☒ Protect Slopes/Channels
☒ Control Site Perimeter
☐ Control Internal Erosion

Targeted Pollutants

	H	M	L	
	☒	☐	☐	Sediment
	☐	☐	☒	Nutrients
	☐	☐	☒	Heavy Metals
	☐	☐	☒	Toxic Materials
	☐	☐	☒	Oil & Grease
	☐	☐	☒	Floatable Materials
	☐	☐	☒	Bacteria & Viruses
	☐	☐	☒	Other Waste

Implementation Requirements

	H	M	L
	☐	☒	☐	Capital Costs
	☐	☐	☒	O&M Costs
	☐	☐	☒	Maintenance
	☐	☐	☒	Training
	☐	☐	☒	Staffing
	☐	☐	☒	Administrative

H=High **M**=Medium **L**=Low

LEHI CITY
PIONEERING UTAH'S FUTURE

153 North 100 East
Lehi, UT 84043

Materials Adapted from Salt Lake County Engineering Division Guidance Document and Other Sources

EXHIBIT A

BMP: Filter Strips/Grassed Swales — FS

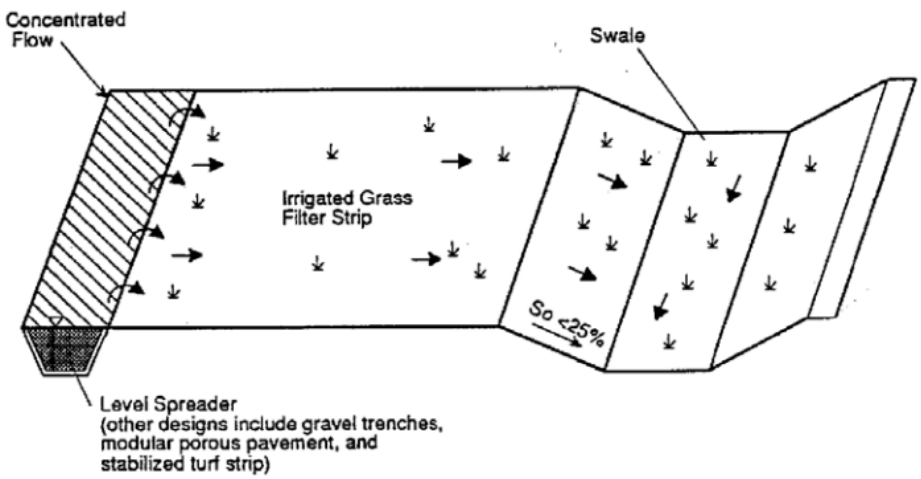

Description:

Filter strips are 20-foot-wide strips of natural or planted vegetation around a construction site. They are designed to cause deposition of sediments within the vegetation layer. Grassed swales are designed to treat and attenuate storm water runoff. Storm water is treated through filtering by the vegetation in the channel, filtering through a subsoil matrix, and/or infiltration into the underlying soils.

Application:

- Suited for areas where the soils are well drained or moderately well drained
- Areas where the bedrock and the water table are well below the surface
- Swales are well suited for treating highway or residential road runoff because they are linear
- Grassed swales should be used on sites with relatively flat slopes of less than 4 percent.

Installation / Application Criteria:

- Make sure the vegetative cover is dense enough to protect the underlying soil while causing sediment to settle
- Filter strip must be approximately 20 feet wide to function well
- The length should be approximately 50 to 75 feet. Where slopes become steeper the length of the strip must be increased
- Swales should have the capacity to pass a 10 year storm safely

Limitations:

- Only applicable in areas where vegetation is previously established or where sod is added
- Vegetated filter strips will not function well on steep slopes, in hilly areas, or in highly paved areas
- Sites with slopes of 15 percent or more may not be suitable for filtering storm water flows
- Wet swales may become a nuisance due to mosquito breeding*

Maintenance:

- Check for channels and repair
- Provide rock aprons to aid in slowing flow if necessary
- Maintain vegetation at optimal height and thickness

Objectives

☐ Housekeeping Practices
☐ Contain Waste
☐ Minimize Disturbed Areas
☒ Stabilize Disturbed Areas
☒ Protect Slopes/Channels
☒ Control Site Perimeter
☐ Control Internal Erosion

Targeted Pollutants

H	M	L	
☒	☐	☐	Sediment
☐	☒	☐	Nutrients
☐	☐	☒	Heavy Metals
☐	☐	☒	Toxic Materials
☐	☐	☒	Oil & Grease
☐	☐	☒	Floatable Materials
☐	☐	☒	Bacteria & Viruses
☐	☐	☒	Other Waste

Implementation Requirements

H	M	L	
☒	☐	☐	Capital Costs
☐	☒	☐	O&M Costs
☐	☒	☐	Maintenance
☐	☐	☒	Training
☐	☐	☒	Staffing
☐	☐	☒	Administrative

H=High **M**=Medium **L**=Low

LEHI CITY
PIONEERING UTAH'S FUTURE

153 North 100 East
Lehi, UT 84043

Materials Adapted from Salt Lake County Engineering Division Guidance Document and Other Sources

EXHIBIT A

BMP: Grading Practices — GP

Soils exposed from land grading activities are very vulnerable to erosion

Description:

Control soil erosion by minimizing the exposure of bare soil to erosive forces. This is done by:

- Limiting the amount of land disturbed at one time in preparation for construction
- Limiting the amount of time between the disturbance of soil and protection or stabilization of disturbed soils, and
- Using grading practices to protect exposed soils susceptible to storm water runoff

Related practices include construction sequencing, preservation of existing vegetation, erosion control practices and sediment control practices.

Approach:

- Limit the area of disturbance to those areas requiring grading. This preserves existing vegetation and reduces the vulnerability of soil to erosion
- Based on erosion potential and sediment control measures on the site, establish what areas are to be graded at one time.
- An undisturbed buffer zone containing vegetation at the lowest elevation of a construction site can reduce the transport of sediment off site.
- Initiate soil protection measures during the course of work to minimize the length of time soil is exposed to erosive forces
- Conduct work in stages so that construction or soil stabilization occurs promptly after disturbance of soil
- Establish a schedule governing the stabilization of disturbed slopes, both in terms of passage of time since commencement and completion of disturbance and in terms of planting season
- Leaving the surface of the disturbed soil graded in a roughened condition (not smooth) can reduce the quantity and velocity of storm water runoff
- Prevent storm water runoff from running onto steep slopes from above
- Avoid long, steep cut or fill slopes that allow runoff water of sufficient quantity or velocity to cut into and erode the slope.

Limitations:

The specific approach to grading on a particular site depends on the conditions of the site and surrounding land: engineering judgment is required to design the approach best suited for each site.

Maintenance:

Practices may need to vary from the approved plan if erosion problems appear when storm water runoff occurs.

Objectives

☐ Housekeeping Practices
☐ Contain Waste
☒ Minimize Disturbed Areas
☒ Stabilize Disturbed Areas
☒ Protect Slopes/Channels
☐ Control Site Perimeter
☒ Control Internal Erosion

Targeted Pollutants

	H	M	L	
	☒	☐	☐	Sediment
	☐	☐	☒	Nutrients
	☐	☐	☒	Heavy Metals
	☐	☐	☒	Toxic Materials
	☐	☐	☒	Oil & Grease
	☐	☐	☒	Floatable Materials
	☐	☐	☒	Bacteria & Viruses
	☐	☐	☒	Other Waste

Implementation Requirements

	H	M	L
	☐	☒	☐	Capital Costs
	☐	☐	☒	O&M Costs
	☐	☐	☒	Maintenance
	☒	☐	☐	Training
	☐	☐	☒	Staffing
	☐	☐	☒	Administrative

H=High **M**=Medium **L**=Low

LEHI CITY
PIONEERING UTAH'S FUTURE

153 North 100 East
Lehi, UT 84043

Materials Adapted from Salt Lake County Engineering Division Guidance Document and Other Sources

EXHIBIT A

BMP: Hydromulching — HM

Description:

A combination of wood fiber mulch, processed grass, or hay or straw mulch and a tacking agent. It is made into a slurry, then applied to bare slopes or other bare areas to provide temporary stabilization.

Application:

- Small roadside slopes
- Large, relatively flat areas

Installation / Application Criteria:

- Legume seeds should be pellet inoculated with the appropriate bacteria.
- The seed should not remain in the hydromulcher tank for more than 30 minutes
- Wood fiber may be dyed to aid in uniform application
- Slurry should be uniformly applied until an adequate coverage is achieved
- The applicator should not be directed at one location for a long period of time or erosion will occur

Limitations:

- Will lose effectiveness after 1 year
- Can only be used on physically stable slopes (at natural angle of repose, or less)

Maintenance:

- Periodically inspect for damage caused by wind, water, or human disturbance
- Promptly repair damaged areas

Objectives

☐ Housekeeping Practices
☐ Contain Waste
☐ Minimize Disturbed Areas
☒ Stabilize Disturbed Areas
☒ Protect Slopes/Channels
☐ Control Site Perimeter
☐ Control Internal Erosion

Targeted Pollutants

H	M	L	
☐	☒	☐	Sediment
☐	☐	☒	Nutrients
☐	☐	☒	Heavy Metals
☐	☐	☒	Toxic Materials
☐	☐	☒	Oil & Grease
☒	☐	☐	Floatable Materials
☐	☐	☒	Bacteria & Viruses
☐	☐	☒	Other Waste

Implementation Requirements

H	M	L	
☐	☒	☐	Capital Costs
☐	☐	☐	O&M Costs
☐	☒	☐	Maintenance
☐	☒	☐	Training
☐	☐	☒	Staffing
☐	☐	☒	Administrative

H=High **M**=Medium **L**=Low

LEHI CITY

153 North 100 East
Lehi, UT 84043

Materials Adapted from Salt Lake County Engineering Division Guidance Document and Other Sources

EXHIBIT A

BMP: Hazardous Waste Materials — HWM

Description:

Prevent or reduce the discharge of pollutants to stormwater from hazardous waste through proper material use, waste disposal, and training of employees and subcontractors.

Application:

Many of the chemicals used on-site can be hazardous materials which become hazardous waste upon disposal. These wastes may include:

- Paints and solvents; petroleum products such as oils, fuels, and grease; herbicides and pesticides; acids for cleaning masonry; and concrete curing compounds

In addition, sites with existing structures may contain wastes which must be disposed of in accordance with Federal, State, and local regulations, including:

- Sandblasting grit mixed with lead, cadmium, or chromium-based paints; asbestos; and PCB's

Installation / Application Criteria:

The following steps will help reduce storm water pollution from hazardous wastes:

- Use all of the product before disposing of the container
- Do not remove the original product label, it contains important safety and disposal information
- Do not over-apply herbicides and pesticides. Prepare only the amount needed. Follow the recommended usage instructions. Apply surface dressings in several smaller applications, as opposed to on large application, to allow time for infiltration and to avoid excess material being carried off-site by runoff. Do not apply these chemicals just before it rains. People applying pesticides must be certified in accordance with Federal and State regulations.

Limitations:

Hazardous waste that cannot be reused or recycled must be disposed of by a licensed hazardous waste hauler.

Maintenance:

- Inspect hazardous waste receptacles and area regularly
- Arrance for regular hazardous waste collection

Objectives

☐ Housekeeping Practices
☒ Contain Waste
☐ Minimize Disturbed Areas
☐ Stabilize Disturbed Areas
☐ Protect Slopes/Channels
☐ Control Site Perimeter
☐ Control Internal Erosion

Targeted Pollutants

	H	M	L	
	☐	☐	☒	Sediment
	☐	☐	☒	Nutrients
	☐	☐	☒	Heavy Metals
	☐	☒	☐	Toxic Materials
	☐	☐	☒	Oil & Grease
	☐	☐	☒	Floatable Materials
	☐	☐	☒	Bacteria & Viruses
	☐	☐	☒	Other Waste

Implementation Requirements

	H	M	L	
	☐	☐	☒	Capital Costs
	☐	☐	☒	O&M Costs
	☐	☒	☐	Maintenance
	☐	☒	☐	Training
	☐	☐	☒	Staffing
	☐	☐	☒	Administrative

H=High **M**=Medium **L**=Low

LEHI CITY
PIONEERING UTAH'S FUTURE

153 North 100 East
Lehi, UT 84043

Materials Adapted from Salt Lake County Engineering Division Guidance Document and Other Sources

EXHIBIT A

BMP: Illegal Dumping Controls — IDC

Description:

Implement measures to detect, correct, and enforce against illegal dumping of pollutants on streets, into the storm drain system, and into creeks. Substances illegally dumped on streets, into the storm drain system, and into creeks include paints, used oil and other automotive fluids, construction debris, chemicals, fresh concrete, leaves, grass clippings, and pet wastes. All of these wastes can cause storm water and receiving water quality problems as well as clog the storm drain system.

Approach:

One of the keys to success is increasing the general public's awareness of the problem and to at least identify the incident, if not correct it. There are a number of ways of accomplishing this:

- Train municipal staff from all departments to recognize and report incidents.
- Deputize municipal staff who may come into contact with illegal dumping with the authority to write illegal dumping tickets for offenders caught in the act.
- Educate the public.
- Provide the public with a mechanism for reporting such as a hotline

Establish system for track incidents which will identify:

- Illegal dumping "hot spots"
- Types and quantities (in some cases) of wastes,
- Patterns in time of occurrence (time of day/night, month, or year)
- Mode of dumping (abandoned containers, "midnight dumping" from moving vehicles, direct dumping of materials, accidents/spills)
- Responding parties

A tracking systems also helps manage the program by indicating trends, and identifying who, what, when, and where efforts should be concentrated.

Limitations:

The elimination of illegal dumping is dependent on the availability, convenience, and cost of alternative means of disposal.

Objectives

☒ Housekeeping Practices
☒ Contain Waste
☐ Minimize Disturbed Areas
☐ Stabilize Disturbed Areas
☐ Protect Slopes/Channels
☐ Control Site Perimeter
☐ Control Internal Erosion

Targeted Pollutants

H	M	L	
☐	☒	☐	Sediment
☐	☐	☒	Nutrients
☐	☒	☐	Heavy Metals
☒	☐	☐	Toxic Materials
☒	☐	☐	Oil & Grease
☒	☐	☐	Floatable Materials
☐	☒	☐	Bacteria & Viruses
☒	☐	☐	Other Waste

Implementation Requirements

H	M	L	
☐	☐	☒	Capital Costs
☐	☒	☐	O&M Costs
☐	☐	☒	Maintenance
☒	☐	☐	Training
☐	☒	☐	Staffing
☐	☐	☒	Administrative

H=High **M**=Medium **L**=Low

LEHI CITY
PIONEERING UTAH'S FUTURE

153 North 100 East
Lehi, UT 84043

Materials Adapted from Salt Lake County Engineering Division Guidance Document and Other Sources

EXHIBIT A

BMP: Inlet Protection – Concrete Block IP

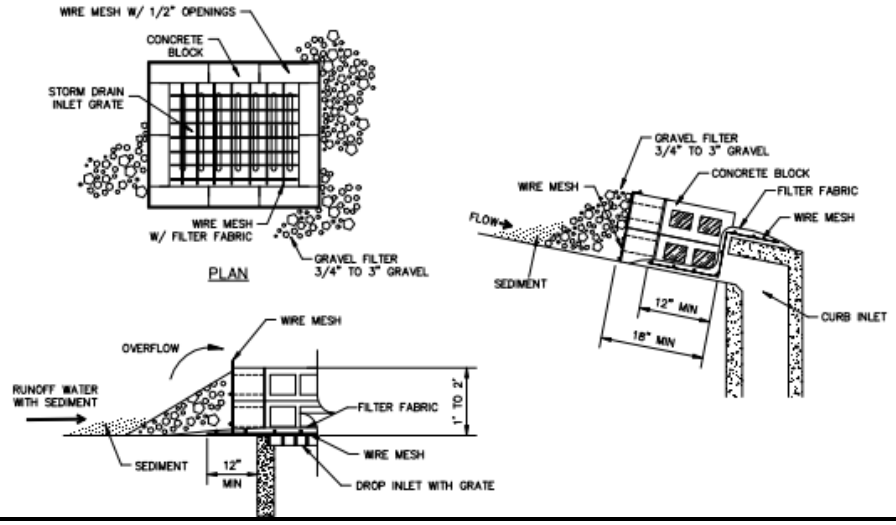

Description:

Concrete block and gravel filter placed over inlet to storm drain system.

Application:

Constructed at inlets in paved or unpaved areas where upgradient area is to be disturbed by construction activities.

Installation / Application Criteria:

- Place wire mesh (with ½ inch openings) over the inlet grate extending one foot past the grate in all directions
- Place concrete blocks around the inlet with openings facing outward. Stack blocks to minimum heigh of 12-inches and maximum height of 24-inches
- Place wire mesh around outside of blocks
- Place gravel (3/4" to 3") around blocks

Limitations:

- Recommended for maximum drainage area of one acre
- Excess flows may bypass the inlet, requiring down gradient controls
- Ponding will occur at inlet

Maintenance:

- Inspect inlet protection after every large storm event and at a minimum of once monthly
- Remove sediment accumulated when it reaches 4-inches in depth
- Replace filter fabric and clean or replace gravel if clogging is apparent

Objectives

☐ Housekeeping Practices
☐ Contain Waste
☐ Minimize Disturbed Areas
☐ Stabilize Disturbed Areas
☐ Protect Slopes/Channels
☒ Control Site Perimeter
☒ Control Internal Erosion

Targeted Pollutants

	H	M	L
Sediment	☒	☐	☐
Nutrients	☐	☐	☒
Heavy Metals	☐	☐	☒
Toxic Materials	☐	☐	☒
Oil & Grease	☐	☐	☒
Floatable Materials	☒	☐	☐
Bacteria & Viruses	☐	☐	☒
Other Waste	☐	☐	☒

Implementation Requirements

	H	M	L
Capital Costs	☐	☒	☐
O&M Costs	☐	☐	☒
Maintenance	☐	☒	☐
Training	☐	☐	☒
Staffing	☐	☐	☒
Administrative	☐	☐	☒

H=High **M**=Medium **L**=Low

LEHI CITY

153 North 100 East
Lehi, UT 84043

Materials Adapted from Salt Lake County Engineering Division Guidance Document and Other Sources

EXHIBIT A

BMP: Inlet Protection - Excavated — IP-E

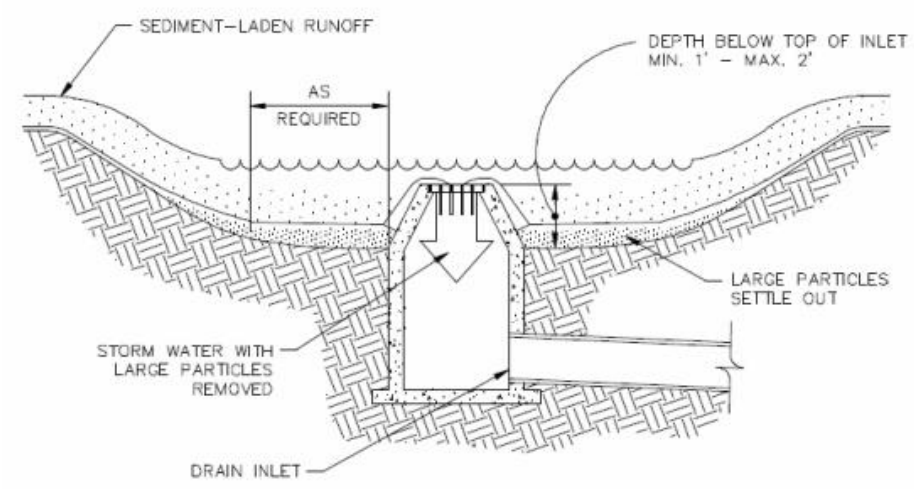

Description:

An area excavated around a storm drain inlet to impound water below the inlet.

Application:

- Construct at storm drainage inlets located downgradient of areas to be disturbed by construction (for inlets in paved areas see other information sheets for inlet protection)

Installation / Application Criteria:

- Provide upgradient sediment controls, such as silt fence during construction of inlet
- When construction of inlet is complete, excavate adjacent area 1 to 2 feet lower than the grate elevation. Size of excavated area should be based on soil type and contributing acreage

Limitations:

- Recommended maximum contributing drainage area of one acre
- Limited to inlets located in open unpaved areas
- Requires flat area adjacent to inlet

Maintenance:

- Inspect inlet protection following storm event and at a minimum of once monthly
- Remove accumulated sediment when it reaches one half of the excavated sump below the grate
- Repair side slopes as required

Objectives

☐ Housekeeping Practices
☐ Contain Waste
☐ Minimize Disturbed Areas
☐ Stabilize Disturbed Areas
☐ Protect Slopes/Channels
☒ Control Site Perimeter
☒ Control Internal Erosion

Targeted Pollutants

	H	M	L
Sediment	☒	☐	☐
Nutrients	☐	☐	☒
Heavy Metals	☐	☐	☒
Toxic Materials	☐	☒	☐
Oil & Grease	☐	☐	☒
Floatable Materials	☒	☐	☐
Bacteria & Viruses	☐	☐	☒
Other Waste	☐	☐	☒

Implementation Requirements

	H	M	L
Capital Costs	☐	☐	☒
O&M Costs	☐	☐	☒
Maintenance	☐	☒	☐
Training	☐	☐	☒
Staffing	☐	☐	☒
Administrative	☐	☐	☒

H=High **M**=Medium **L**=Low

LEHI CITY

153 North 100 East
Lehi, UT 84043

Materials Adapted from Salt Lake County Engineering Division Guidance Document and Other Sources

EXHIBIT A

BMP: Inlet Protection - Gravel — IP

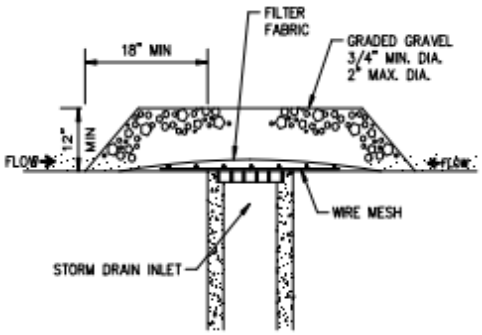

DROP INLET PROTECTION-GRAVEL

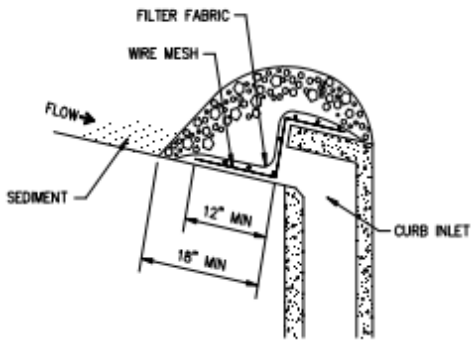

CURB INLET PROTECTION-GRAVEL

Description:

Placement of gravel filter over inlet to storm drain to filter storm water runoff

Application:

Construct at inlets in paved or unpaved areas where upgradient area is to be disturbed by construction activities.

Installation / Application Criteria:

- Place wire mesh (with ½ inch openings) over the inlet grate extending one foot past the grate in all directions
- Place filter fabric over the mesh. Filter fabric should be selected based on soil type
- Place graded gravel, to a minimum depth of 12-inches, over the filter fabric and extending 18-inches past the grate in all directions

Limitations:

- Recommended for maximum drainage area of one acre
- Excess flows may bypass the inlet requiring down gradient controls
- Ponding will occur at inlet

Maintenance:

- Inspect inlet protection after every large storm even and at a minimum of once every two weeks
- Remove sediment accumulated when it reaches 4-inches in depth
- Replace filter fabric and clean or replace gravel if clogging is apparent

Objectives

☐ Housekeeping Practices
☐ Contain Waste
☐ Minimize Disturbed Areas
☐ Stabilize Disturbed Areas
☐ Protect Slopes/Channels
☒ Control Site Perimeter
☒ Control Internal Erosion

Targeted Pollutants

H M L
☒☐☐ Sediment
☐☐☒ Nutrients
☐☐☒ Heavy Metals
☐☐☒ Toxic Materials
☐☐☒ Oil & Grease
☒☐☐ Floatable Materials
☐☐☒ Bacteria & Viruses
☐☐☒ Other Waste

Implementation Requirements

H M L
☐☒☐ Capital Costs
☐☐☒ O&M Costs
☐☒☐ Maintenance
☐☐☒ Training
☐☐☒ Staffing
☐☐☒ Administrative

H=High **M**=Medium **L**=Low

LEHI CITY
PIONEERING UTAH'S FUTURE

153 North 100 East
Lehi, UT 84043

Materials Adapted from Salt Lake County Engineering Division Guidance Document and Other Sources

EXHIBIT A

BMP: Inlet Protection – Gravel Bags IP-GB

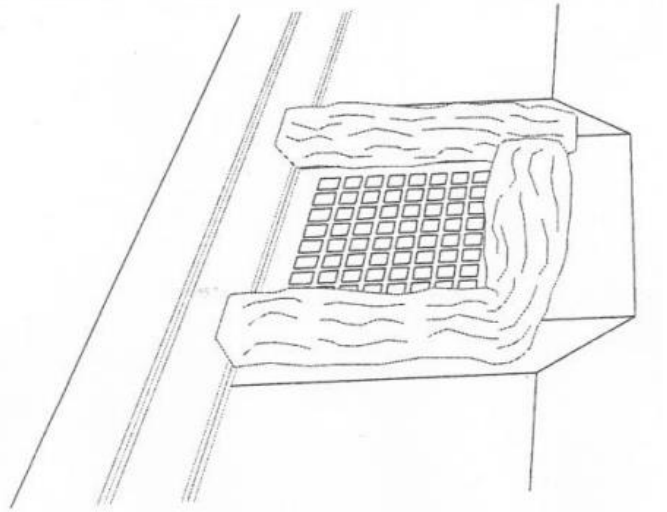

Description:

Sediment barrier erected around storm drain inlet.

Application:

Construct at storm drainage inlets located down-gradient of areas to be disturbed by construction

Installation / Application Criteria:

- Provide up-gradient sediment controls, such as silt fence during construction of inlet
- When construction of curb and gutter and roadway is complete, install gravel filled bags around perimeter of inlet
- Fill to recommended levels to reduce splitting of bags

Limitations:

- Recommended maximum contributing drainage area of one acre
- Requires shallow slopes adjacent to inlet

Maintenance:

- Inspect inlet protection following storm event and at a minimum of once every 14 days
- Remove accumulated sediment when it reaches half the height of the bag
- Look for bypassing or undercutting and repair or realign as needed
- Replace and clean up spilled gravel when bags split

Objectives

☒ Housekeeping Practices
☐ Contain Waste
☐ Minimize Disturbed Areas
☐ Stabilize Disturbed Areas
☐ Protect Slopes/Channels
☐ Control Site Perimeter
☐ Control Internal Erosion

Targeted Pollutants

	H	M	L
Sediment	☒	☐	☐
Nutrients	☐	☐	☒
Heavy Metals	☐	☐	☒
Toxic Materials	☐	☐	☒
Oil & Grease	☐	☐	☒
Floatable Materials	☒	☐	☐
Bacteria & Viruses	☐	☐	☒
Other Waste	☒	☐	☐

Implementation Requirements

	H	M	L
Capital Costs	☐	☒	☐
O&M Costs	☐	☐	☒
Maintenance	☐	☒	☐
Training	☐	☐	☒
Staffing	☐	☐	☒
Administrative	☐	☐	☒

H=High **M**=Medium **L**=Low

LEHI CITY

153 North 100 East
Lehi, UT 84043

Materials Adapted from Salt Lake County Engineering Division Guidance Document and Other Sources

EXHIBIT A

BMP: Inlet Protection – Silt Bags IP-SB

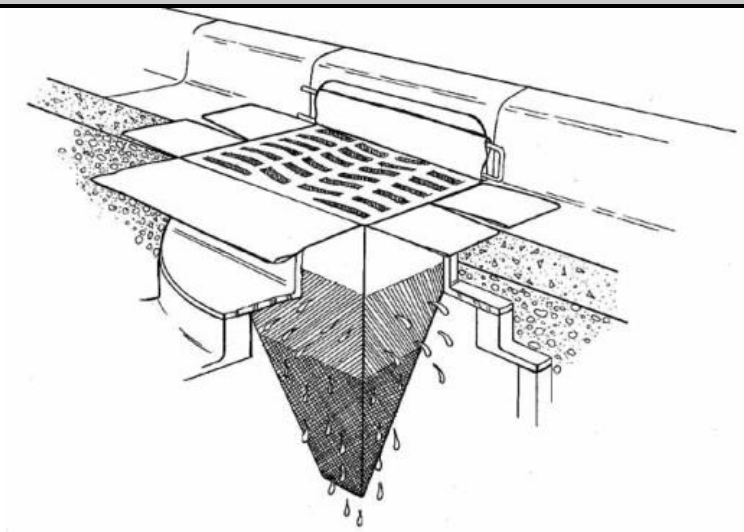

Description:

Collect and trap sediment and debris entering catch basins form either grated or curb inlets. Insert is made of fabric and is placed in the drain inlet around the perimeter of the grate. Runoff passes through the bag before discharging into the drain outlet pipe. Overflow holes are usually provided to pass larger flows without causing a backwater at the grate. Certain manufactured products include polymers intended to increase pollutant removal effectiveness.

Application:

- Storm drain inlet boxes

Installation / Application Criteria:

- Regular maintenance is necessary
- Evaluation of the device chosen should be balanced with cost
- Hydraulic capacity controls effectiveness
- Most useful in small drainage areas (< 1 acre)
- Ideal in combination with other BMPs

Limitations:

- Cost
- Maintenance required to prevent plugging and to remain effective

Maintenance:

- Inspect inlet protection following storm event and at a minimum of once every 14 days
- Remove bag and empty accumulated sediment as necessary

Objectives

☐ Housekeeping Practices
☒ Contain Waste
☐ Minimize Disturbed Areas
☐ Stabilize Disturbed Areas
☐ Protect Slopes/Channels
☐ Control Site Perimeter
☐ Control Internal Erosion

Targeted Pollutants

	H	M	L
Sediment	☒	☐	☐
Nutrients	☐	☐	☒
Heavy Metals	☐	☐	☒
Toxic Materials	☐	☐	☒
Oil & Grease	☐	☐	☒
Floatable Materials	☒	☐	☐
Bacteria & Viruses	☐	☐	☒
Other Waste	☐	☐	☒

Implementation Requirements

	H	M	L
Capital Costs	☐	☒	☐
O&M Costs	☐	☒	☐
Maintenance	☒	☐	☐
Training	☐	☒	☐
Staffing	☐	☐	☒
Administrative	☐	☐	☒

H=High **M**=Medium **L**=Low

LEHI CITY

153 North 100 East
Lehi, UT 84043

Materials Adapted from Salt Lake County Engineering Division Guidance Document and Other Sources

EXHIBIT A

BMP: Inlet Protection – Silt Fence or Straw Bale — IP-SF

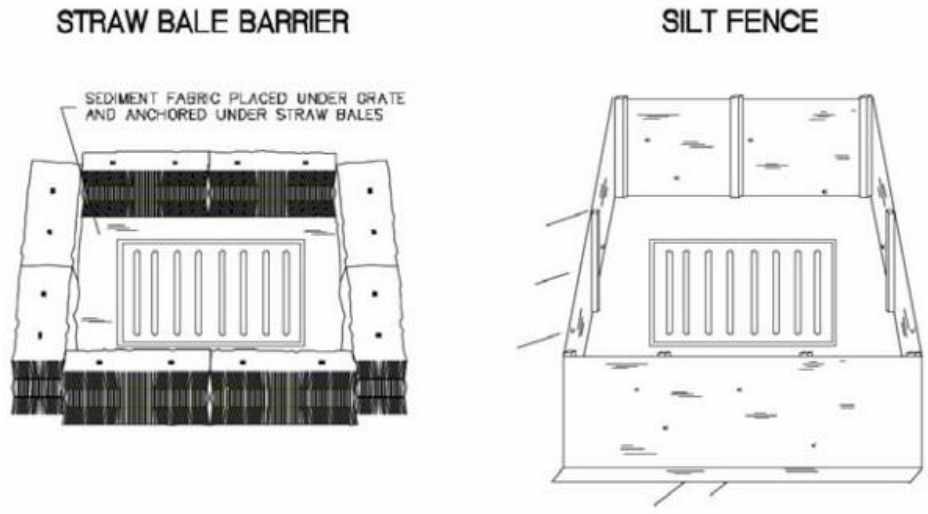

Description:

Sediment barrier erected around storm drain inlet.

Application:

Construct at storm drainage inlets located downgradient of areas to be disturbed by construction (for inlets in paved areas see other information sheets for inlet protection)

Installation / Application Criteria:

- Provide upgradient sediment controls, such as silt fence during construction of inlet
- When construction of inlet is complete, erect straw bale barrier or silt fence surrounding perimeter of inlet. Follow instructions and guidelines on individual BMP information sheets for straw bale barrier and silt fence construction

Limitations:

- Recommended maximum contributing drainage area of one acre
- Limited to inlets located in open unpaved areas
- Requires shallow slopes adjacent to inlet

Maintenance:

- Inspect inlet protection following storm event and at a minimum of once every 14 days
- Removed accumulated sediment when it reaches 4" in depth
- Repair or realign barrier/fence as needed
- Look for bypassing or undercutting and recompact soil around barrier/fence as required

Objectives

☐ Housekeeping Practices
☐ Contain Waste
☐ Minimize Disturbed Areas
☐ Stabilize Disturbed Areas
☐ Protect Slopes/Channels
☒ Control Site Perimeter
☒ Control Internal Erosion

Targeted Pollutants

	H	M	L
Sediment	☒	☐	☐
Nutrients	☐	☐	☒
Heavy Metals	☐	☐	☒
Toxic Materials	☐	☐	☒
Oil & Grease	☐	☐	☒
Floatable Materials	☒	☐	☐
Bacteria & Viruses	☐	☐	☒
Other Waste	☐	☐	☒

Implementation Requirements

	H	M	L
Capital Costs	☐	☒	☐
O&M Costs	☐	☐	☒
Maintenance	☐	☒	☐
Training	☐	☐	☒
Staffing	☐	☐	☒
Administrative	☐	☐	☒

H=High **M**=Medium **L**=Low

LEHI CITY

153 North 100 East
Lehi, UT 84043

Materials Adapted from Salt Lake County Engineering Division Guidance Document and Other Sources

EXHIBIT A

BMP: Mulching — ML

Material	Application	Depth	Comments
Gravel: Washed 1/4" to 1-1/2"	9 cy/1000 sf	3 inches	Good for traffic areas Good for short slopes
Straw: Air-dried, free of seeds and coarse material	2-3 bales /1000 sf	2 inches min.	Subject to wind blowing Tack down or keep moist
Wood Fiber Cellulose: Free from growth inhibitors; dyed green	35 lb/1000 sf	1 inch	For critical areas, double application rate; Limit to slopes < 3% and < 150 feet

Description:

Placement of material such as straw, grass, woodchips, wood fibers, or fabricated matting over open area.

Application:

- Any exposed area to remain untouched longer that 14 days and that will be exposed less that 60 days (seed areas to be exposed in excess of 60 days)
- Areas that have been seeded
- Stockpiled soil material

Installation / Application Criteria:

- Roughen area to receive mulch to create depressions that mulch material can settle into
- Apply mulch to required thickness and anchor as necessary
- Ensure material used is weed free and does not contain any constituents that will inhibit plant growth

Limitations:

- Anchoring may be required to prevent migration of mulch material
- Downgradient control may be required to prevent mulch material being transported to storm water system

Maintenance:

- Inspect mulched areas after every rainfall event and at a minimum of every 14 days
- Replace mulch on any bare areas and re-anchor as necessary
- Clean and replace downgradient controls as necessary

Objectives

☐ Housekeeping Practices
☐ Contain Waste
☐ Minimize Disturbed Areas
☒ Stabilize Disturbed Areas
☒ Protect Slopes/Channels
☐ Control Site Perimeter
☐ Control Internal Erosion

Targeted Pollutants

H	M	L	
☒	☐	☐	Sediment
☐	☒	☐	Nutrients
☐	☐	☒	Heavy Metals
☒	☐	☐	Toxic Materials
☐	☐	☒	Oil & Grease
☐	☐	☒	Floatable Materials
☐	☐	☒	Bacteria & Viruses
☐	☐	☒	Other Waste

Implementation Requirements

H	M	L	
☐	☒	☐	Capital Costs
☐	☒	☐	O&M Costs
☐	☒	☐	Maintenance
☐	☐	☒	Training
☐	☐	☒	Staffing
☐	☐	☒	Administrative

H=High **M**=Medium **L**=Low

LEHI CITY
PIONEERING UTAH'S FUTURE

153 North 100 East
Lehi, UT 84043

Materials Adapted from Salt Lake County Engineering Division Guidance Document and Other Sources

EXHIBIT A

BMP: Materials Storage — MS

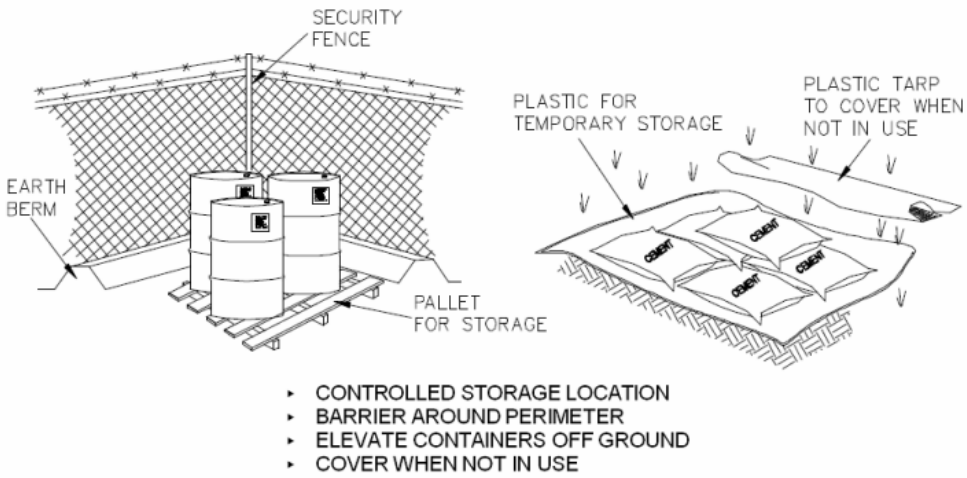

Description:

Controlled storage of on-site materials.

Application:

- Storage of hazardous, toxic, and all chemical substances
- Any construction site with outside storage of materials

Installation / Application Criteria:

- Designate a secured area with limited access as the storage location. Ensure no waterways or drainage paths are nearby
- Construct compacted earthen berm (see earth berm barrier information sheet), or similar perimeter containment around storage location for impoundment in the case of spills
- Ensure all on-site personnel utilize designated storage area. Do not store excessive amounts of material that will not be utilized on site
- For active use of materials away from the storage area, ensure materials are not set directly on the ground and are covered when not in use.

Limitations:

- Does not prevent contamination due to mishandling of products
- Spill Prevention and Response Plan still required
- Only effective if materials are actively stored in controlled location

Maintenance:

- Inspect daily and repair any damage to perimeter impoundment or security fencing
- Check that material are being correctly stored (i.e. standing upright, in labeled containers, tightly capped) and that no materials are being stored away from the designated location

Objectives

☒ Housekeeping Practices
☒ Contain Waste
☐ Minimize Disturbed Areas
☐ Stabilize Disturbed Areas
☐ Protect Slopes/Channels
☐ Control Site Perimeter
☐ Control Internal Erosion

Targeted Pollutants

	H	M	L	
	☐	☐	☒	Sediment
	☐	☐	☒	Nutrients
	☐	☐	☒	Heavy Metals
	☒	☐	☐	Toxic Materials
	☐	☐	☒	Oil & Grease
	☐	☐	☒	Floatable Materials
	☐	☐	☒	Bacteria & Viruses
	☐	☒	☐	Other Waste

Implementation Requirements

	H	M	L
Capital Costs	☐	☒	☐
O&M Costs	☐	☒	☐
Maintenance	☐	☒	☐
Training	☒	☐	☐
Staffing	☐	☐	☒
Administrative	☐	☐	☒

H=High **M**=Medium **L**=Low

LEHI CITY

153 North 100 East
Lehi, UT 84043

Materials Adapted from Salt Lake County Engineering Division Guidance Document and Other Sources

EXHIBIT A

BMP: Outlet Protection — OP

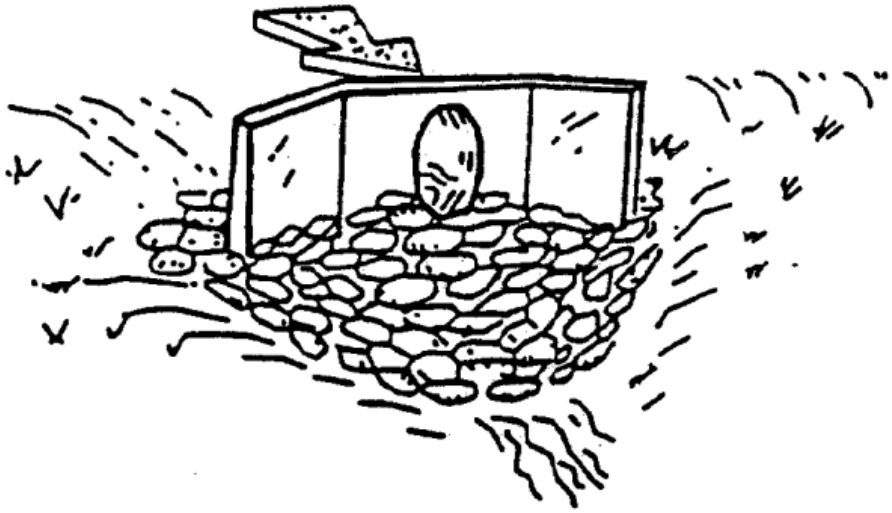

Description:

A rock outlet protection is a physical device composed of rock or grouted riprap which is placed at the outlet of a pipe to prevent scour of the soil caused by high pipe flow velocities, and to absorb flow energy to produce nonerosive velocities.

Application:

- Wherever discharge velocities and energies at the outlets of culverts, conduits, or channels are sufficient to erode the next downstream reach
- Rock outlet protection is best suited for temporary use during construction because it is usually less expensive and easier to install than concrete aprons or energy dissipators
- A sediment trap below the pipe outlet is recommended if runoff is sediment laden
- Permanent rock riprap protection should be designed and sized by the engineer as part of the culvert, conduit, or channel design
- Grouted riprap should be avoided in areas of freeze and thaw because the grout will break up

Installation / Application Criteria:

Rock outlet protection is effective when the rock is sized and placed properly. When this is accomplished, rock outlets do much to limit erosion at pipe outlets. Rock size should be increased for high velocity flows. Best results are obtained when sound, durable, angular rock is used.

Limitations:

- Large storms often wash away the rock outlet protection and leave the area susceptible to erosion
- Sediment captured by the rock outlet protection may be difficult to remove without removing the rock
- Outlet protection may negatively impact the channel habitat

Maintenance:

- Inspect after each significant rain for erosion and/or disruption of the rock, and repair immediately
- Grouted or wire-tied rock riprap can minimize maintenance requirements

Objectives

☐ Housekeeping Practices
☐ Contain Waste
☐ Minimize Disturbed Areas
☐ Stabilize Disturbed Areas
☒ Protect Slopes/Channels
☐ Control Site Perimeter
☒ Control Internal Erosion

Targeted Pollutants

	H	M	L
Sediment	☒	☐	☐
Nutrients	☐	☐	☒
Heavy Metals	☐	☐	☒
Toxic Materials	☐	☐	☒
Oil & Grease	☐	☐	☒
Floatable Materials	☐	☐	☒
Bacteria & Viruses	☐	☐	☒
Other Waste	☐	☐	☒

Implementation Requirements

	H	M	L
Capital Costs	☐	☒	☐
O&M Costs	☐	☐	☒
Maintenance	☐	☒	☐
Training	☐	☐	☒
Staffing	☐	☐	☒
Administrative	☐	☐	☒

H=High **M**=Medium **L**=Low

LEHI CITY

153 North 100 East
Lehi, UT 84043

Materials Adapted from Salt Lake County Engineering Division Guidance Document and Other Sources

EXHIBIT A

BMP: Oil/Water Separators and Water Quality Inlets — OWS

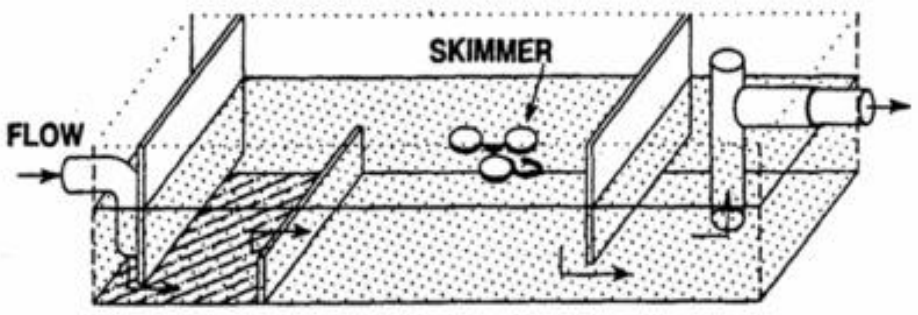

Description:

Oil/water separators are designed to remove a specific group of contaminants: petroleum compounds and grease. However, separators will also remove floatable debris and settleable solids. Two general types of oil/water separators are used: conventional gravity separator and the coalescing plate interceptor (CPI).

Application:

- Applicable to situations where the concentration of oil and grease related compounds is abnormally high and source control cannot provide effective control. The general types of businesses where this situation is likely are truck, car, and equipment maintenance and washing businesses, as well as businesses that perform maintenance on their own equipment and vehicles
- Public facilities where separators may be required include marine ports, airfields, fleet vehicle maintenance and washing facilities, and mass transit park-and-ride lots
- Conventional separators are capable of removing oil droplets with diameters equal to or greater than 150 microns
- A CPI separator should be used if smaller droplets must be removed

Installation / Application Criteria:

- Sizing relates to anticipated influent oil concentration, water temperature and velocity, and the effluent goal.
- To maintain a reasonable separator size, it should be designed to bypass flows in excess of first flush.

Limitations:

- The lack of data on oil characteristics in stormwater leads to considerable uncertainty about performance
- An air quality permit may be required

Maintenance:

Clean accumulated oil, grease, and floating debris frequently.

Objectives

☐ Housekeeping Practices
☐ Contain Waste
☐ Minimize Disturbed Areas
☐ Stabilize Disturbed Areas
☐ Protect Slopes/Channels
☐ Control Site Perimeter
☐ Control Internal Erosion

Targeted Pollutants

H	M	L	
☐	☒	☐	Sediment
☐	☒	☐	Nutrients
☐	☒	☐	Heavy Metals
☐	☒	☐	Toxic Materials
☒	☐	☐	Oil & Grease
☒	☐	☐	Floatable Materials
☐	☐	☒	Bacteria & Viruses
☐	☒	☐	Other Waste

Implementation Requirements

H	M	L	
☒	☐	☐	Capital Costs
☐	☒	☐	O&M Costs
☐	☒	☐	Maintenance
☐	☐	☒	Training
☐	☐	☒	Staffing
☐	☐	☒	Administrative

H=High **M**=Medium **L**=Low

LEHI CITY
PIONEERING UTAH'S FUTURE

153 North 100 East
Lehi, UT 84043

Materials Adapted from Salt Lake County Engineering Division Guidance Document and Other Sources

EXHIBIT A

BMP: Preservation of Existing Vegetation — PEV

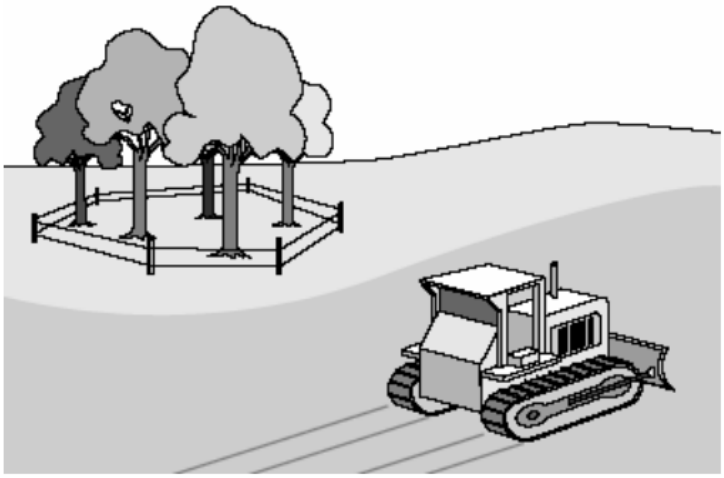

Description:

Carefully planned preservation of existing vegetation minimizes the potential of removing or injuring existing trees, vines, shrubs, and/or grasses that serve as erosion controls.

Application:

This technique is applicable to all types of sites. Areas where preserving vegetation can be particularly beneficial are floodplains, wetlands, stream banks, steep slopes, and other areas where erosion controls would be difficult to establish, install, or maintain.

Installation / Application Criteria:

- Clearly mark, flag, or fence vegetation or areas where vegetation should be preserved
- Prepare landscaping plans which include as much existing vegetation as possible and state proper care during and after construction
- Define and protect a setback area from vegetation to be preserved with berms, fencing, signs, etc.
- Propose landscaping plans which do not include plant species that compete with the existing vegetation
- Do not locate construction traffic routes, spoil piles, etc. where significant adverse impact on existing vegetation may occur.

Limitations:

- Requires forward planning by the owner/developer, contractor, and design staff
- For sites with diverse topography, it is often difficult and expensive to save existing trees while grading the site satisfactorily for the planned development
- May not be cost effective with high land costs

Maintenance:

- Inspection and maintenance requirements for protection of vegetation are low
- Maintenance of native trees or vegetation should conform to landscape plan specifications

Objectives

☐ Housekeeping Practices
☐ Contain Waste
☒ Minimize Disturbed Areas
☒ Stabilize Disturbed Areas
☒ Protect Slopes/Channels
☒ Control Site Perimeter
☐ Control Internal Erosion

Targeted Pollutants

H	M	L	
☒	☐	☐	Sediment
☐	☐	☒	Nutrients
☐	☐	☒	Heavy Metals
☐	☐	☒	Toxic Materials
☐	☐	☒	Oil & Grease
☐	☐	☒	Floatable Materials
☐	☐	☒	Bacteria & Viruses
☐	☐	☒	Other Waste

Implementation Requirements

H	M	L	
☐	☐	☒	Capital Costs
☐	☐	☒	O&M Costs
☐	☐	☒	Maintenance
☐	☐	☒	Training
☐	☐	☒	Staffing
☐	☐	☒	Administrative

H=High **M**=Medium **L**=Low

LEHI CITY
PIONEERING UTAH'S FUTURE

153 North 100 East
Lehi, UT 84043

Materials Adapted from Salt Lake County Engineering Division Guidance Document and Other Sources

EXHIBIT A

BMP: Parking Lot Design — PLD

Description:

Consider available design options to reduce the quantity and improve the quality of storm water runoff from parking lots. Related practices include filter strips, biofilters, grassed swales, and sediment traps.

Considerations:

- Shared parking reduces the total number of parking spaces needed for businesses adjacent to each other. Businesses having parking demand during the day on weekdays (such as office buildings) can often share parking spaces with businesses having weekend or evening parking demands (such as restaurants or movie theaters)
- The use of landscaped islands in parking lots reduces to the total impervious area of the parking lot, reducing the quantity of storm water runoff
- Some parking lots can be designed such that storm water runoff flows across a landscaped area prior to being collected. This can both reduce the quantity of runoff and improve the quality of runoff
- Include structural practices in parking lot design to reduce storm water runoff contamination. Examples include sediment traps in inlet boxes, oil/water separators, water quality inlets, and passing storm water over vegetation
- Parking lots should not be larger than is necessary – they should provide adequate, but not excessive, parking
- Technologies are available that allow for a natural turf surface on parking lots. Such surfaces support traffic loads and can be plowed of snow in the winter. They are generally used for overflow parking but can be used for primary parking as well. Grass pavement can both reduce storm water runoff and improve storm water runoff quality

Limitations:

- Parking lot design is specific to each development site; some considerations may not apply on some sites
- Shared parking is only viable where complimentary businesses are located adjacent to one another

Objectives

☐ Housekeeping Practices
☐ Contain Waste
☐ Minimize Disturbed Areas
☐ Stabilize Disturbed Areas
☐ Protect Slopes/Channels
☐ Control Site Perimeter
☐ Control Internal Erosion

Targeted Pollutants

H	M	L	
☒	☐	☐	Sediment
☐	☐	☒	Nutrients
☐	☒	☐	Heavy Metals
☐	☐	☒	Toxic Materials
☒	☐	☐	Oil & Grease
☐	☒	☐	Floatable Materials
☐	☐	☒	Bacteria & Viruses
☐	☐	☒	Other Waste

Implementation Requirements

H	M	L	
☐	☒	☐	Capital Costs
☐	☐	☒	O&M Costs
☐	☐	☒	Maintenance
☐	☐	☒	Training
☐	☐	☒	Staffing
☐	☐	☒	Administrative

H=High **M**=Medium **L**=Low

LEHI CITY
PIONEERING UTAH'S FUTURE

153 North 100 East
Lehi, UT 84043

Materials Adapted from Salt Lake County Engineering Division Guidance Document and Other Sources

EXHIBIT A

BMP: Portable Toilets — PT

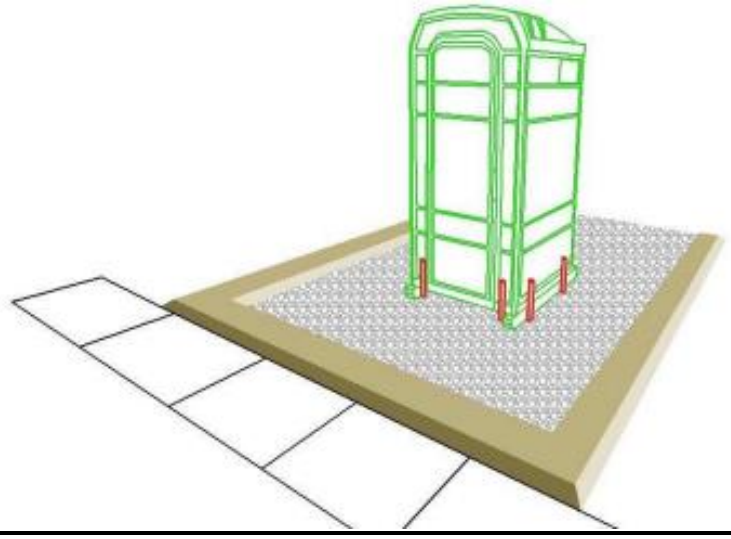

Description:

Temporary on-site sanitary facilities for construction personnel.

Application:

All sites with no permanent sanitary facilities or where permanent facility is too far from activities.

Installation / Application Criteria:

- Locate portable toilets at least 10 feet from any storm water conveyance, inlet, curb and gutter, or conduit to a waterway
- If it is not possible to maintain at least 10 feet of separation, additional controls such as secondary containment, additional surface preparation, or berms may be needed
- Portable toilets should be secured so they will not tip over

Limitations:

No limitations

Maintenance:

- Portable toilets should be maintained in good working order by licensed service with daily observation for leak detection
- Regular waste collection should be arranged with licensed service
- All waste should be deposited in sanitary sewer system for treatment with appropriate agency approval

Objectives

☒ Housekeeping Practices
☒ Contain Waste
☐ Minimize Disturbed Areas
☐ Stabilize Disturbed Areas
☐ Protect Slopes/Channels
☐ Control Site Perimeter
☐ Control Internal Erosion

Targeted Pollutants

	H	M	L	
	☐	☐	☒	Sediment
	☐	☐	☒	Nutrients
	☐	☐	☒	Heavy Metals
	☒	☐	☐	Toxic Materials
	☐	☐	☒	Oil & Grease
	☐	☐	☒	Floatable Materials
	☒	☐	☐	Bacteria & Viruses
	☒	☐	☐	Other Waste

Implementation Requirements

	H	M	L
Capital Costs	☐	☒	☐
O&M Costs	☐	☒	☐
Maintenance	☐	☒	☐
Training	☐	☐	☒
Staffing	☐	☐	☒
Administrative	☐	☐	☒

H=High **M**=Medium **L**=Low

LEHI CITY

153 North 100 East
Lehi, UT 84043

Materials Adapted from Salt Lake County Engineering Division Guidance Document and Other Sources

EXHIBIT A

BMP: Riprap — RR

Description:

Riprap is a permanent, erosion-resistant protective layer made of loose stones. It is intended to protect soil from erosion in areas of concentrated runoff. Riprap may also be used to stabilize slopes that are unstable because of seepage problems.

Application:

- Riprap is normally used at locations where erosive forces from water flow exceed the ability of the soil or vegetative cover to resist those forces
- Riprap can be used for pipe outlet protection, channel lining, scour protection, etc.
- Riprap is commonly used for wave protection on lakes

Installation / Application Criteria:

- For slopes steeper that 2:1, consider using materials other than riprap for erosion protection
- If riprap is being planned for the bottom of a permanently flowing channel, the bottom can be modified to enhance fish habitat. This can be done by construction riffles and pools which simulate natural conditions
- When working within flowing streams, measures should be taken to prevent excessive turbidity and erosion during construction. Bypassing base flows or temporarily blocking base flows are two possible methods. Work should be done during a period of low flow.

In designing riprap consider the following:

- Use durable rock, such as granite, and a variety or rock sizes
- The thickness of riprap layers should be at least 1.25 times the max stone diameter
- Filter material is usually required between riprap and the underlying soil surface

Limitations:

- Riprap may be unstable on very steep slopes
- The placement of a riprap in streams requires a state stream alteration permit

Maintenance:

- Riprap should be inspected annually and after major storms
- If riprap has been damaged, repairs should be made promptly to prevent a progressive failure
- If repairs are needed repeatedly at one location, the site should be evaluated to see if original design conditions have changed

Objectives

☐ Housekeeping Practices
☐ Contain Waste
☐ Minimize Disturbed Areas
☐ Stabilize Disturbed Areas
☒ Protect Slopes/Channels
☐ Control Site Perimeter
☒ Control Internal Erosion

Targeted Pollutants

	H	M	L
Sediment	☒	☐	☐
Nutrients	☐	☐	☒
Heavy Metals	☐	☐	☒
Toxic Materials	☐	☐	☒
Oil & Grease	☐	☐	☒
Floatable Materials	☐	☐	☒
Bacteria & Viruses	☐	☐	☒
Other Waste	☐	☐	☒

Implementation Requirements

	H	M	L
Capital Costs	☐	☐	☐
O&M Costs	☐	☐	☐
Maintenance	☐	☐	☐
Training	☐	☐	☐
Staffing	☐	☐	☐
Administrative	☐	☐	☐

H=High **M**=Medium **L**=Low

LEHI CITY

153 North 100 East
Lehi, UT 84043

Materials Adapted from Salt Lake County Engineering Division Guidance Document and Other Sources

EXHIBIT A

BMP: Sediment Basin — SB

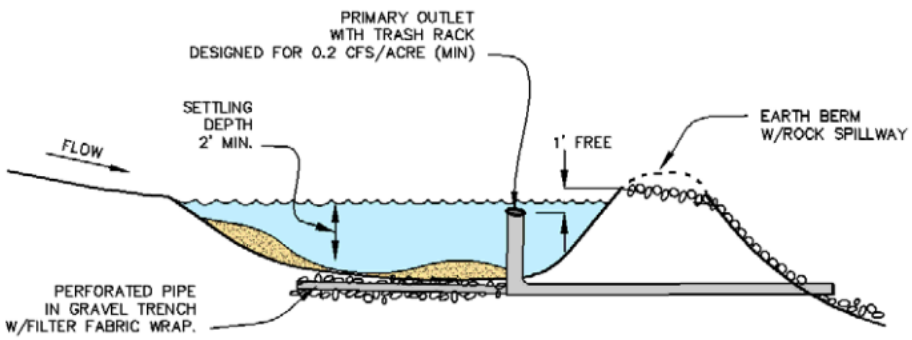

Description:

A pond created by excavation or construction of an embankment designed to retain or detain runoff sufficiently to allow excessive sediment to settle.

Application:

- At the outlet of all disturbed watersheds 10 acres or larger
- At the outlet of smaller disturbed watersheds, as necessary
- Where post construction detention basins will be located

Installation / Application Criteria:

- Design basin for site specific location, maintain effective flow length 2 times width
- Excavate basin or construct compacted berm containment; ensure no downgradient hazard if failure should occur. (Provide minimum of 67 cy. per acre of drainage area)

Limitations:

- Should be sized based on anticipated runoff, sediment loading and drainage area size
- May require silt fence at outlet for entrapment of very fine silts and clays
- May require safety fencing to prevent public access
- Height restrictions for embankments is regulated by Utah Division of Dam Safety

Maintenance:

- Inspect after each rainfall event and at a minimum of once every two weeks
- Repair any damage to berm, spillway or sidewalls
- Remove accumulated sediment as it reaches 2/3 height of available storage
- Check outlet for sedimentation/erosion of downgradient area and remediate as necessary. Install silt fence if sedimentation is apparent

Objectives

☐ Housekeeping Practices
☐ Contain Waste
☐ Minimize Disturbed Areas
☐ Stabilize Disturbed Areas
☐ Protect Slopes/Channels
☐ Control Site Perimeter
☒ Control Internal Erosion

Targeted Pollutants

H	M	L	
☒	☐	☐	Sediment
☐	☐	☒	Nutrients
☐	☐	☒	Heavy Metals
☐	☒	☐	Toxic Materials
☐	☐	☒	Oil & Grease
☐	☒	☐	Floatable Materials
☐	☐	☒	Bacteria & Viruses
☐	☐	☒	Other Waste

Implementation Requirements

H	M	L	
☒	☐	☐	Capital Costs
☐	☒	☐	O&M Costs
☐	☒	☐	Maintenance
☐	☐	☒	Training
☐	☐	☒	Staffing
☐	☐	☒	Administrative

H=High **M**=Medium **L**=Low

LEHI CITY
PIONEERING UTAH'S FUTURE

153 North 100 East
Lehi, UT 84043

Materials Adapted from Salt Lake County Engineering Division Guidance Document and Other Sources

EXHIBIT A

BMP: Sand Bag Barrier — SBB

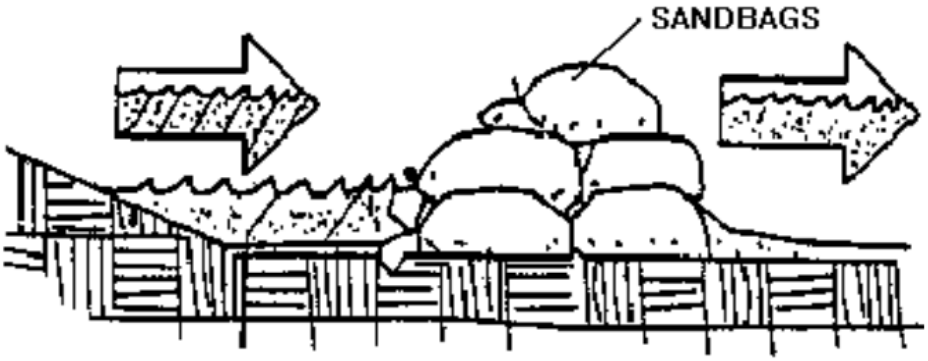

Description:

Stacking sand bags along a level contour creates a barrier which detains sediment-laden water, ponding water upstream of the barrier and promoting sedimentation.

Application:

- Along the perimeter of the site
- May be used in drainage areas up to 5 acres
- Along streams and channels
- Across swales with small catchments
- Around temporary spoil areas
- Below the toe of a cleared slope

Installation / Application Criteria:

- Install along a level contour
- Base of sand bag barrier should be at least 48" wide
- Height of sand bag barrier should be at least 18" high
- 4" PVC pipe may be installed between the top layer of sand bags to drain large flood flows
- Provide area behind barrier for runoff to pond and sediment to settle
- Place below to toe of a slope
- UV resistant bags should be used

Limitations:

- Sand bags are more expensive than other barriers, but also more durable
- Burlap should not be used

Maintenance:

- Inspect after each rain event and a minimum of once every two weeks
- Reshape or replace damaged sand bags immediately
- Remove buildup of sediment

Objectives

☐ Housekeeping Practices
☐ Contain Waste
☐ Minimize Disturbed Areas
☐ Stabilize Disturbed Areas
☒ Protect Slopes/Channels
☒ Control Site Perimeter
☒ Control Internal Erosion

Targeted Pollutants

	H	M	L	
	☒	☐	☐	Sediment
	☐	☐	☒	Nutrients
	☐	☐	☒	Heavy Metals
	☐	☐	☒	Toxic Materials
	☐	☐	☒	Oil & Grease
	☐	☐	☒	Floatable Materials
	☐	☐	☒	Bacteria & Viruses
	☐	☐	☒	Other Waste

Implementation Requirements

	H	M	L	
	☒	☐	☐	Capital Costs
	☐	☐	☒	O&M Costs
	☐	☐	☒	Maintenance
	☐	☐	☒	Training
	☐	☐	☒	Staffing
	☐	☐	☒	Administrative

H=High **M**=Medium **L**=Low

LEHI CITY

153 North 100 East
Lehi, UT 84043

Materials Adapted from Salt Lake County Engineering Division Guidance Document and Other Sources

EXHIBIT A

BMP: Straw Bale Barrier — SBB

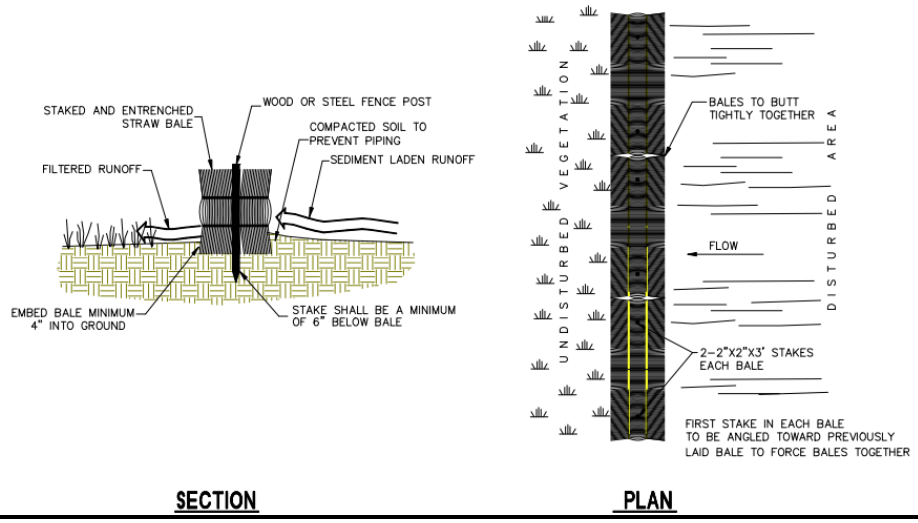

Description:

Temporary sediment barrier consisting of a row of entrenched and anchored straw bales.

Application:

- Perimeter Control: place barrier at downgradient limits of disturbance
- Sediment Barrier: place barrier at toe of slope or soil stockpile
- Protection of Existing Waterways: place barrier at top of stream bank
- Inlet Protection

Installation / Application Criteria:

- Excavate a 4" minimum deep trench along contour line, i.e., parallel to slope, removing all grass and other material that may allow underflow
- Place bales in trench with ends tightly abutting; fill any gaps by wedging loose straw into openings
- Anchor each bale and compact to prevent piping; backing on uphill side to be built up 4" above ground at the barrier

Limitations:

- Recommended maximum area of 0.5 acre per 100' of barrier
- Recommended maximum upgradient slope length of 150 feet
- Recommended maximum uphill grade of 2:1 (50%)
- Maximum duration of use is 6 months

Maintenance:

- Inspect immediately after any rainfall event and at least daily during prolonged rainfall
- Look for runoff bypassing ends of barriers or undercutting barriers
- Repair or replace damaged areas of the barrier and remove accumulated sediment
- Realign bales as necessary to provide continuous barrier and fill gaps
- Recompact soil around barrier as necessary to prevent piping

Objectives

☐ Housekeeping Practices
☐ Contain Waste
☐ Minimize Disturbed Areas
☐ Stabilize Disturbed Areas
☒ Protect Slopes/Channels
☒ Control Site Perimeter
☒ Control Internal Erosion

Targeted Pollutants

H	M	L	
☒	☐	☐	Sediment
☐	☐	☒	Nutrients
☐	☐	☒	Heavy Metals
☐	☐	☒	Toxic Materials
☐	☐	☒	Oil & Grease
☐	☐	☒	Floatable Materials
☐	☐	☒	Bacteria & Viruses
☐	☐	☒	Other Waste

Implementation Requirements

H	M	L	
☐	☒	☐	Capital Costs
☐	☐	☒	O&M Costs
☐	☒	☐	Maintenance
☐	☐	☒	Training
☐	☐	☒	Staffing
☐	☐	☒	Administrative

H=High **M**=Medium **L**=Low

LEHI CITY
PIONEERING UTAH'S FUTURE

153 North 100 East
Lehi, UT 84043

Materials Adapted from Salt Lake County Engineering Division Guidance Document and Other Sources

EXHIBIT A

BMP: Street Cleaning — SC

Description:

Prevent sediment from entering storm water by sweeping the streets near construction activities.

Application:

- Useful for any paved streets near construction sites where sediment is blown, tracked, or spilled onto the streets

Installation / Application Criteria:

- The equipment used should be appropriate for the conditions. Vacuum sweepers work more effectively when the area is dry. Brush sweepers work better when the sediment is wet or stuck to the surface
- Mechanical equipment should be operated and maintained according to the manufacturer's recommendations

Limitations:

- Is labor and equipment intensive
- May cause dust

Maintenance:

The street should be checked daily for any sediment deposits. Street sweeping should be implemented whenever sediment from construction activity is found on the streets.

Objectives

☒ Housekeeping Practices
☐ Contain Waste
☐ Minimize Disturbed Areas
☐ Stabilize Disturbed Areas
☐ Protect Slopes/Channels
☒ Control Site Perimeter
☐ Control Internal Erosion

Targeted Pollutants

	H	M	L	
	☒	☐	☐	Sediment
	☐	☐	☒	Nutrients
	☐	☐	☒	Heavy Metals
	☐	☐	☒	Toxic Materials
	☐	☐	☒	Oil & Grease
	☐	☐	☒	Floatable Materials
	☐	☐	☒	Bacteria & Viruses
	☐	☐	☒	Other Waste

Implementation Requirements

	H	M	L	
	☐	☐	☒	Capital Costs
	☐	☒	☐	O&M Costs
	☒	☐	☐	Maintenance
	☐	☐	☒	Training
	☐	☐	☒	Staffing
	☐	☐	☒	Administrative

H=High **M**=Medium **L**=Low

LEHI CITY

153 North 100 East
Lehi, UT 84043

Materials Adapted from Salt Lake County Engineering Division Guidance Document and Other Sources

EXHIBIT A

BMP: Stabilized Construction Entrance — SCE

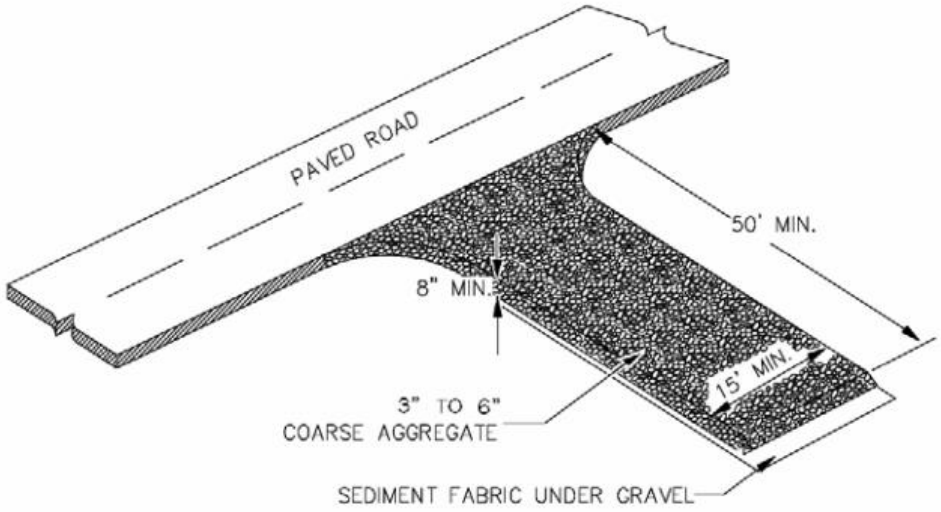

Description:

A stabilized pad of crushed stone located where construction traffic enters or leaves the site from or to paved surfaces.

Application:

At any point of ingress and egress at a construction site where adjacent traveled way is paved. Generally applies to sites over 2 acres unless special conditions exist.

Installation / Application Criteria:

- Clear and grub area and grade to provide maximum slope of 2%
- Compact subgrade and place filter fabric if desired (recommended for entrances to remain for more than 3 months
- Place coarse aggregate, 3-6 inches in size, to a minimum depth of 8 inches

Limitations:

- Requires periodic top dressing with additional stones
- Should be used in conjunction with street sweeping on adjacent public right-of-way

Maintenance:

- Inspect daily for loss of gravel or sediment buildup
- Inspect adjacent roadway for sediment deposit and clean by sweeping or shoveling
- Repair entrance and replace gravel as required to maintain control in good working condition
- Expand stabilized area as required to accommodate traffic and prevent erosion at driveways

Objectives

☒ Housekeeping Practices
☐ Contain Waste
☐ Minimize Disturbed Areas
☐ Stabilize Disturbed Areas
☐ Protect Slopes/Channels
☒ Control Site Perimeter
☐ Control Internal Erosion

Targeted Pollutants

H	M	L	
☒	☐	☐	Sediment
☐	☐	☒	Nutrients
☐	☐	☒	Heavy Metals
☐	☐	☒	Toxic Materials
☐	☐	☒	Oil & Grease
☐	☐	☒	Floatable Materials
☐	☐	☒	Bacteria & Viruses
☐	☐	☒	Other Waste

Implementation Requirements

H	M	L	
☐	☒	☐	Capital Costs
☐	☒	☐	O&M Costs
☐	☒	☐	Maintenance
☐	☐	☒	Training
☐	☐	☒	Staffing
☐	☐	☒	Administrative

H=High **M**=Medium **L**=Low

LEHI CITY
PIONEERING UTAH'S FUTURE

153 North 100 East
Lehi, UT 84043

Materials Adapted from Salt Lake County Engineering Division Guidance Document and Other Sources

EXHIBIT A

BMP: Spill Clean-Up — SCU

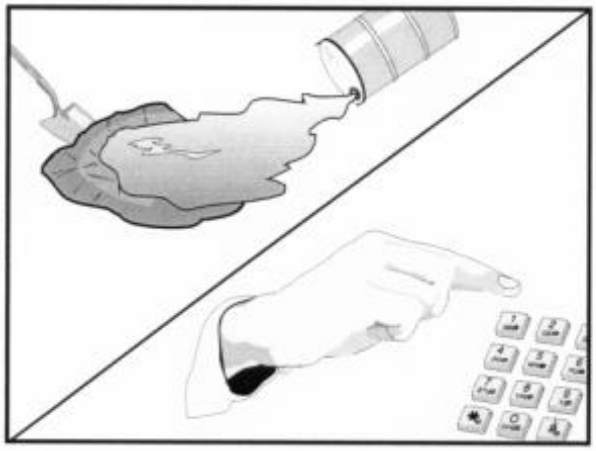

Standard Symbol

BMP Objectives

- ○Soil Stabilization
- ○Sediment Control
- ○Tracking Control
- ○Wind Erosion Control
- ●Non-Storm Water Management
- ●Materials and Waste Management

Description:

Practices to clean-up leakage/spillage of on-site materials that may be harmful to receiving waters.

Application:

All sites

General:

- Store controlled materials within a storage area
- Educate personnel on prevention and clean-up
- Designate an Emergency Coordinator responsible for providing spill response
- Maintain a supply of clean-up equipment on-site as well as a list of response agencies with phone numbers

Methods:

- Clean-up spills/leaks immediately and remediate cause
- Use as little water as possible. NEVER HOSE DOWN OR BURY SPILL CONTAMINATED MATERIAL
- Use rags or absorbent material for clean-up. Excavate contaminated soils. Dispose of clean-up material and soil as hazardous waste
- Document all spills with date, location, substance, volume, actions taken, and other pertinent data
- Contact local fire department and state division of environmental response and remediation for any spill of reportable quantity

Objectives

☒ Housekeeping Practices
☒ Contain Waste
☐ Minimize Disturbed Areas
☐ Stabilize Disturbed Areas
☐ Protect Slopes/Channels
☐ Control Site Perimeter
☐ Control Internal Erosion

Targeted Pollutants

	H	M	L	
	☐	☐	☒	Sediment
	☐	☐	☒	Nutrients
	☐	☐	☒	Heavy Metals
	☒	☐	☐	Toxic Materials
	☐	☒	☐	Oil & Grease
	☐	☐	☒	Floatable Materials
	☐	☐	☒	Bacteria & Viruses
	☐	☐	☒	Other Waste

Implementation Requirements

	H	M	L
	☐	☒	☐	Capital Costs
	☐	☐	☒	O&M Costs
	☐	☐	☒	Maintenance
	☒	☐	☐	Training
	☐	☐	☒	Staffing
	☐	☐	☒	Administrative

H=High **M**=Medium **L**=Low

LEHI CITY

153 North 100 East
Lehi, UT 84043

Materials Adapted from Salt Lake County Engineering Division Guidance Document and Other Sources

EXHIBIT A

BMP: Slope Drain — SD

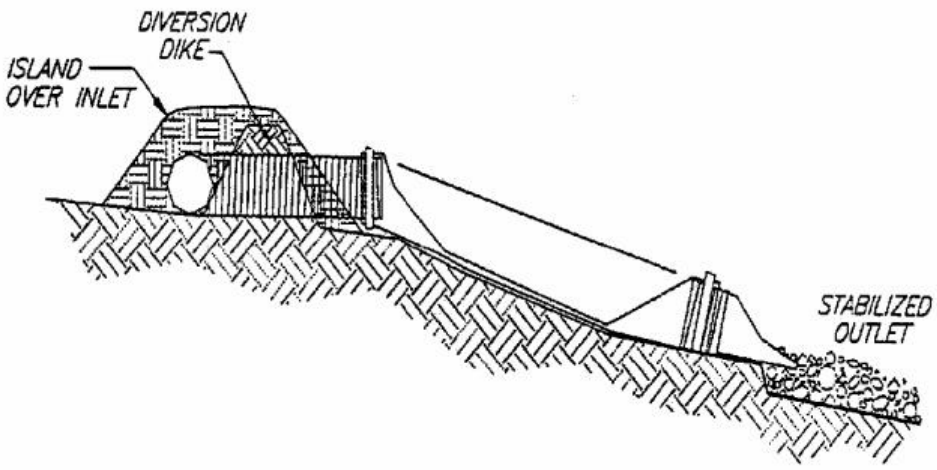

Description:

A temporary pipe or lined channel that drains the top of a slope to a stable discharge point at the bottom of a slope without causing erosion.

Application:

- Where concentrated flow or surface runoff must be conveyed down a slope in order to prevent erosion
- Emergency spillway for a sediment basin

Installation / Application Criteria:

- Secure inlet and surround with dikes to prevent gully erosion, and anchor pipe to slope
- Size to convey at least the peak of a 10-year storm event
- Stabilize outlet (See Outlet Protection BMP)

Limitations:

- Maximum drainage area per slope drain is 5 acres
- Clogged slope drains will force water around the pipe and cause slope erosion
- Dissipation of high flow velocities at the pipe outlet is required to avoid downstream erosion
- Failure can result in flooding and severe erosion

Maintenance:

- Structure must be inspected weekly and after storms
- Inlet must be protected from undercutting and no water should circumvent the entry
- Outlet should not produce erosion; velocity dissipators must be maintained
- Pipe anchors must be checked to ensure that the pipe remains anchored to the slope

Objectives

☐ Housekeeping Practices
☐ Contain Waste
☐ Minimize Disturbed Areas
☐ Stabilize Disturbed Areas
☒ Protect Slopes/Channels
☐ Control Site Perimeter
☒ Control Internal Erosion

Targeted Pollutants

H	M	L	
☒	☐	☐	Sediment
☐	☐	☒	Nutrients
☐	☐	☒	Heavy Metals
☐	☐	☒	Toxic Materials
☐	☐	☒	Oil & Grease
☐	☐	☒	Floatable Materials
☐	☐	☒	Bacteria & Viruses
☐	☐	☒	Other Waste

Implementation Requirements

H	M	L	
☒	☐	☐	Capital Costs
☐	☐	☒	O&M Costs
☐	☒	☐	Maintenance
☐	☐	☒	Training
☐	☐	☒	Staffing
☐	☐	☒	Administrative

H=High **M**=Medium **L**=Low

LEHI CITY
PIONEERING UTAH'S FUTURE

153 North 100 East
Lehi, UT 84043

Materials Adapted from Salt Lake County Engineering Division Guidance Document and Other Sources

EXHIBIT A

BMP: Storm Drain Flushing — SDF

Description:

A storm drain is "flushed" with water to suspend and remove deposited materials. Flushing is particularly beneficial for storm drain pipes with grades too flat to be self-scouring. Flushing helps ensure pipes convey design flows and remove pollutants from the storm drain system.

Approach:

- Locate reaches of storm drain with deposit problems and develop a flushing schedule that keeps the pipe clear of excessive buildup
- Whenever possible, flushed effluent should be collected, decanted, evaporated, and disposed of in a landfill

Limitations:

- Most effective in small diameter pipes (36-inch diameter pipe or less, depending on water supply and sediment collection capacity)
- Water source must be available
- May have difficulty finding downstream area to collect sediments
- Requires liquid/sediment disposal

Objectives

☒ Housekeeping Practices
☐ Contain Waste
☐ Minimize Disturbed Areas
☐ Stabilize Disturbed Areas
☐ Protect Slopes/Channels
☐ Control Site Perimeter
☐ Control Internal Erosion

Targeted Pollutants

	H	M	L	
	☒	☐	☐	Sediment
	☐	☒	☐	Nutrients
	☐	☒	☐	Heavy Metals
	☐	☐	☒	Toxic Materials
	☐	☐	☒	Oil & Grease
	☐	☐	☒	Floatable Materials
	☒	☐	☐	Bacteria & Viruses
	☐	☒	☐	Other Waste

Implementation Requirements

	H	M	L	
	☐	☒	☐	Capital Costs
	☒	☐	☐	O&M Costs
	☐	☐	☒	Maintenance
	☐	☒	☐	Training
	☒	☐	☐	Staffing
	☐	☐	☒	Administrative

H=High **M**=Medium **L**=Low

LEHI CITY

153 North 100 East
Lehi, UT 84043

Materials Adapted from Salt Lake County Engineering Division Guidance Document and Other Sources

EXHIBIT A

BMP: Storm Drain System Signs — SDSS

Description:

Stenciling of the storm drain system (inlets, catch basins, channels, and creeks) with prohibitive language/graphic icons discourages the illegal dumping of unwanted materials.

Approach:

- Create a volunteer work force to stencil storm drain inlets
- An important aspect of a stenciling program is the distribution of informational flyers that educate the neighborhood (business and residential) about stormwater pollution, the storm drain system, and the watershed. The flyers should also provide information on alternatives such as recycling, household hazardous waste disposal, and safer products
- Because a stenciling program primarily involves volunteer services, liability release forms and volunteer identification notices should also be administered
- Readability of stencils is critical to their effectiveness. Wherever possible, stencils should be painted on a smooth surface such as cement, as opposed to asphalt
- Use municipal staff to erect signs near drainage channels and creeks
- An effectively implemented stenciling program encourages change in personal behavior and helps minimize non-point source pollutants from entering the storm drain system. An additional benefit is that waste and catch basin maintenance is minimized through the reduction of disposed materials into storm drain inlets. Finally, a well implemented stenciling program encourages the use of household hazardous waste collection and used oil recycling programs

Limitations:

- Private property access limits stenciling to publicly owned areas
- Program is highly dependent on volunteer response
- Storm drain inlets that are physically blocked will be missed or require follow-up
- High traffic/commercial/industrial zones are the responsibility of city staff
- Ongoing maintenance is needed to maintain readable signs

Objectives

☒ Housekeeping Practices
☐ Contain Waste
☐ Minimize Disturbed Areas
☐ Stabilize Disturbed Areas
☐ Protect Slopes/Channels
☐ Control Site Perimeter
☐ Control Internal Erosion

Targeted Pollutants

H	M	L	
☐	☐	☒	Sediment
☐	☒	☐	Nutrients
☐	☐	☒	Heavy Metals
☒	☐	☐	Toxic Materials
☐	☒	☐	Oil & Grease
☐	☒	☐	Floatable Materials
☐	☐	☒	Bacteria & Viruses
☒	☐	☐	Other Waste

Implementation Requirements

H	M	L	
☐	☐	☒	Capital Costs
☐	☒	☐	O&M Costs
☐	☐	☒	Maintenance
☐	☒	☐	Training
☐	☐	☒	Staffing
☐	☐	☒	Administrative

H=High **M**=Medium **L**=Low

LEHI CITY
PIONEERING UTAH'S FUTURE

153 North 100 East
Lehi, UT 84043

Materials Adapted from Salt Lake County Engineering Division Guidance Document and Other Sources

EXHIBIT A

BMP: Silt Fence — SF

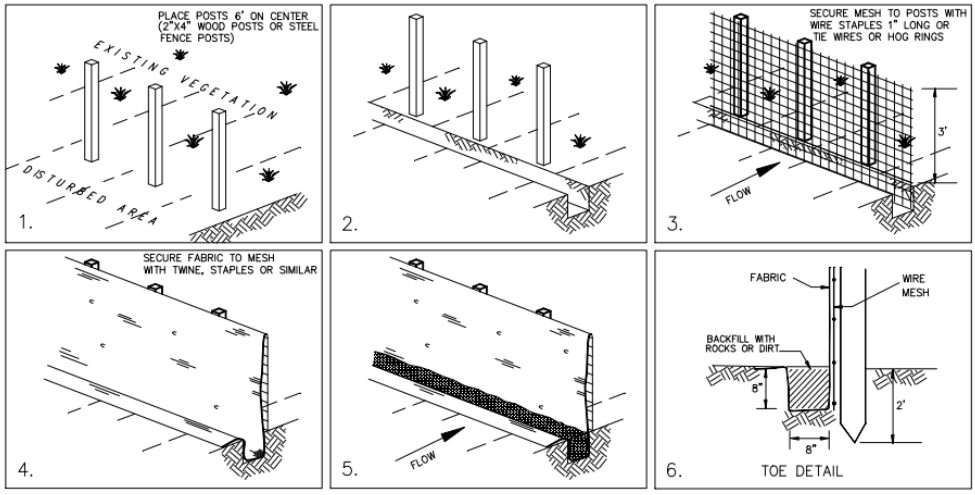

Description:

A temporary sediment barrier consisting of entrenched filter fabric stretched across and secured to supporting posts.

Application:

- Perimeter control: place barrier at downgradient limits of disturbance
- Sediment barrier: place barrier at toe of slope or soil stockpile
- Protection of existing waterways: place barrier at top of stream bank
- Inlet protection: place fence surrounding catch basins

Installation / Application Criteria:

- Place posts 6′ apart on center along contour (or use preassembled unit) and drive 2′ minimum into ground. Excavate an anchor trench immediately up gradient of posts
- Cut fabric to required width, unroll along length of barrier and drape over barrier. Secure fabric to mesh with twine, staples, or similar, with trailing edge extending into anchor trench
- Backfill trench over fabric to anchor
- Fabric must have 85% minimum sediment removal efficiency

Limitations:

- Recommended maximum drainage area of 0.5 acres per 100 feet
- Recommended maximum upgradient slope length of 150′
- Recommended maximum uphill grade of 2:1 (50%)
- Recommended maximum flow rate of 0.5 cfs
- Ponding should not be allowed behind fence

Maintenance:

- Inspect immediately after any rainfall and at least daily during prolonged rainfall
- Look for runoff bypassing ends of barriers or undercutting barriers
- Repair or replace damaged areas of the barrier and remove accumulated sediment
- Re-anchor fence as necessary to prevent shortcutting
- Remove accumulated sediment when it reaches ½ the height of the fence

Objectives

☐ Housekeeping Practices
☐ Contain Waste
☐ Minimize Disturbed Areas
☐ Stabilize Disturbed Areas
☒ Protect Slopes/Channels
☒ Control Site Perimeter
☒ Control Internal Erosion

Targeted Pollutants

	H	M	L	
	☒	☐	☐	Sediment
	☐	☐	☒	Nutrients
	☐	☐	☒	Heavy Metals
	☐	☐	☒	Toxic Materials
	☐	☐	☒	Oil & Grease
	☐	☐	☒	Floatable Materials
	☐	☐	☒	Bacteria & Viruses
	☐	☐	☒	Other Waste

Implementation Requirements

	H	M	L
	☐	☒	☐	Capital Costs
	☐	☒	☐	O&M Costs
	☐	☒	☐	Maintenance
	☐	☐	☒	Training
	☐	☐	☒	Staffing
	☐	☐	☒	Administrative

H=High **M**=Medium **L**=Low

LEHI CITY
PIONEERING UTAH'S FUTURE
153 North 100 East
Lehi, UT 84043

Materials Adapted from Salt Lake County Engineering Division Guidance Document and Other Sources

EXHIBIT A

BMP: Stockpile Management — SM

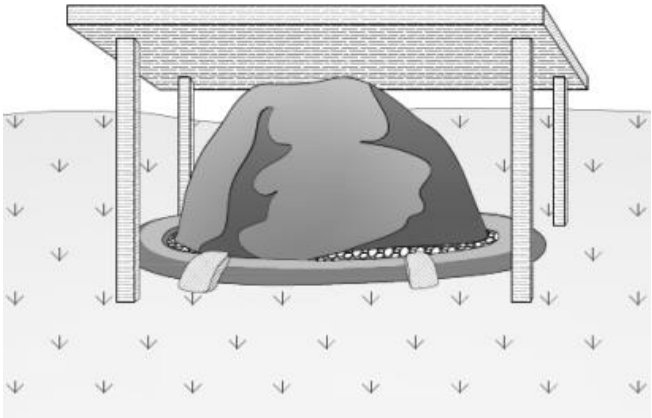

Description:

Proper storage and management practices for stockpiles will reduce the potential for these materials to discharge into waterways.

Application:

Construction sites with stockpiles material.

Installation / Application Criteria:

- Locate stockpiles a least 100 feet from any storm water conveyance
- Follow CGP and air quality permit requirements for managing material stockpiles and minimizing dust generation
- Locate stockpiles on permeable surfaces where possible
- Do not stockpile materials in areas subject to ponding or standing water
- Use perimeter controls such as berms, fiber rolls, gravel bags, etc. to protect stockpiles from stormwater run-on and to minimize potential sediment discharges
- Water soluble materials (e.g., salt or lime) must not be stockpiled uncovered. Soluble chemicals must be stored indoors, or at a minimum fully covered with plastic sheeting, tarps, or other suitable protection at all times to prevent contact with precipitation and stormwater runoff
- Treated wood stockpiles shall be stored off the ground surface and covered to minimize exposure to precipitation and stormwater runoff
- Do not hose down or sweep waste stockpile materials into any waterway or stormwater conveyance
- Limit quantities of materials stockpiled onsite at any given time. Material should be staged and ordered in quantities that minimize the amount stored onsite

Maintenance:

- Inspect stockpile protection following material use, following a rain event, and at least biweekly
- Monitor the weather forecast to determine the need to cover stockpiles materials
- Maintain or replace stockpile covers and controls as needed

Objectives

☒ Housekeeping Practices
☒ Contain Waste
☐ Minimize Disturbed Areas
☐ Stabilize Disturbed Areas
☐ Protect Slopes/Channels
☐ Control Site Perimeter
☐ Control Internal Erosion

Targeted Pollutants

	H	M	L
Sediment	☒	☐	☐
Nutrients	☐	☒	☐
Heavy Metals	☐	☐	☒
Toxic Materials	☐	☐	☒
Oil & Grease	☐	☐	☒
Floatable Materials	☐	☐	☒
Bacteria & Viruses	☐	☐	☒
Other Waste	☐	☒	☐

Implementation Requirements

	H	M	L
Capital Costs	☐	☒	☐
O&M Costs	☐	☐	☒
Maintenance	☐	☒	☐
Training	☐	☐	☒
Staffing	☐	☐	☒
Administrative	☐	☐	☒

H=High **M**=Medium **L**=Low

LEHI CITY

153 North 100 East
Lehi, UT 84043

Materials Adapted from Salt Lake County Engineering Division Guidance Document and Other Sources

EXHIBIT A

BMP: Seeding and Planting — SP

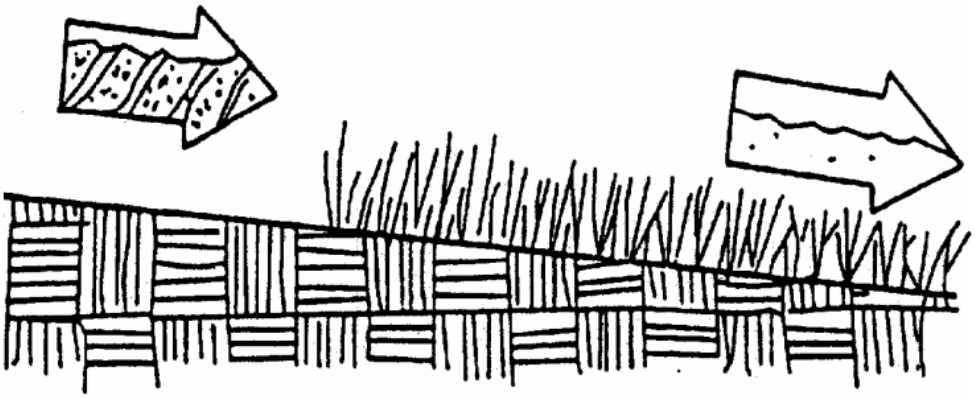

Description:

Seeding of grass and plantings of trees, shrubs, vines, and ground covers provide long-term stabilization of soil. In some areas, with suitable climates, grasses can be planted for temporary stabilization.

Application:

- Appropriate for site stabilization both during construction and post-construction
- Any graded/cleared areas where construction activities have ceased
- Open space cut and fill areas
- Steep slopes, spoil piles, vegetated swales, landscape corridors, stream banks. Use in conjunction with matting, mulch, or blanketing where appropriate.

Installation / Application Criteria:

Types of vegetation, site and seedbed preparation, planting time, fertilization and water requirement should be considered for each application.

Grasses:

- Ground preparations: fertilize and mechanically stabilize the soil
- Tolerant of short-term temperature extremes and waterlogged soil composition
- Appropriate soil conditions: shallow soil base, good drainage, slope 2:1 or flatter
- Mowing, irrigating, and fertilizing are vital for promoting vigorous grass growth

Trees and Shrubs:

- Selection criteria: vigor, species, size, shape, and wildlife food source
- Soil conditions: select species appropriate for soil, drainage, and acidity
- Other factors: wind/exposure, temperature extremes, and irrigation needs

Vines and Ground Covers:

- Ground preparation: lime and fertilizer preparation
- Use proper seeding rates
- Appropriate soil conditions: drainage, acidity, and slopes
- Generally avoid species requiring irrigation

Objectives

☐ Housekeeping Practices
☐ Contain Waste
☐ Minimize Disturbed Areas
☐ Stabilize Disturbed Areas
☒ Protect Slopes/Channels
☒ Control Site Perimeter
☐ Control Internal Erosion

Targeted Pollutants

	H	M	L	
	☒	☐	☐	Sediment
	☐	☒	☐	Nutrients
	☐	☐	☒	Heavy Metals
	☐	☒	☐	Toxic Materials
	☐	☐	☒	Oil & Grease
	☐	☐	☒	Floatable Materials
	☐	☐	☒	Bacteria & Viruses
	☐	☐	☒	Other Waste

Implementation Requirements

	H	M	L
Capital Costs	☐	☒	☐
O&M Costs	☐	☒	☐
Maintenance	☐	☒	☐
Training	☐	☐	☒
Staffing	☐	☐	☒
Administrative	☐	☐	☒

H=High **M**=Medium **L**=Low

LEHI CITY
PIONEERING UTAH'S FUTURE

153 North 100 East
Lehi, UT 84043

Materials Adapted from Salt Lake County Engineering Division Guidance Document and Other Sources

EXHIBIT A

BMP: Surface Roughening — SR

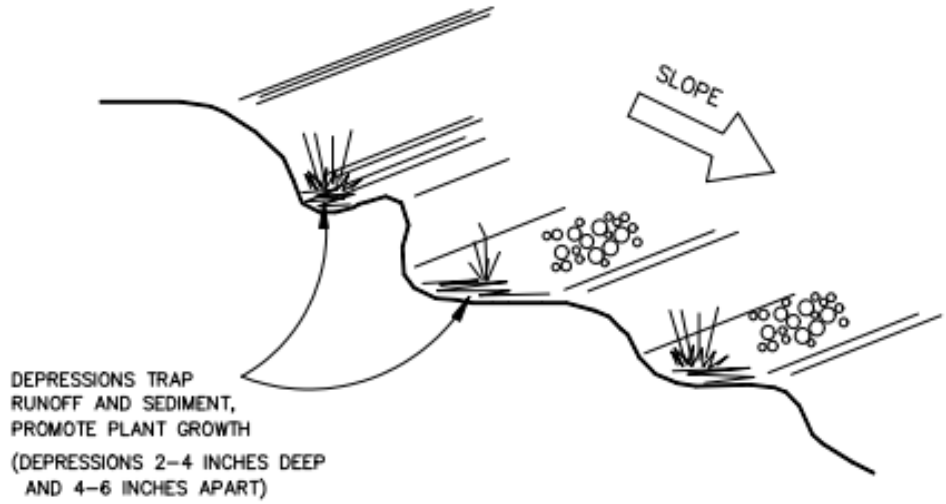

Description:

Rough preparation of working areas leaving depressions and uneven surfaces. Depressions should be done parallel to contours.

Application:

Surface roughening is appropriate for all construction that will not be receiving impervious cover within 14 days and that will be exposed less than 60 days (seed areas to be open in excess of 60 days).

Installation / Application Criteria:

- Surface should be left in rough condition during initial earthwork activity
- Surfaces that have become smoothed or compacted due to equipment traffic should be roughened by use of disks, spring harrows, teeth on front end of loader, or similar, operating along the contours of the slope. Tracking (by crawler tractor driving along slope) may also be used to provide depressions parallel to contours
- Avoid compaction of soils during roughening as this inhibits plant growth and promotes storm water runoff. Limit tracked machinery to sandy soil
- Seed or much areas to be exposed in excess of 60 days
- Employ dust controls (see Dust Control Detail Sheet if appropriate)

Limitations:

- Will not withstand heavy rainfall
- Slopes steeper than 2:1 (50%) should be benched (see Benching Detail Sheet)

Maintenance:

- Inspect following any storm event and at a minimum of weekly
- If erosion in the form of rills (small waterways formed by runoff) is evident, perform machine roughening of area
- For vegetated slopes, reseed areas that are bare or have been reworked

Objectives

☐ Housekeeping Practices
☐ Contain Waste
☐ Minimize Disturbed Areas
☒ Stabilize Disturbed Areas
☒ Protect Slopes/Channels
☐ Control Site Perimeter
☒ Control Internal Erosion

Targeted Pollutants

H	M	L	
☒	☐	☐	Sediment
☐	☐	☒	Nutrients
☐	☐	☒	Heavy Metals
☐	☐	☒	Toxic Materials
☐	☐	☒	Oil & Grease
☐	☐	☒	Floatable Materials
☐	☐	☒	Bacteria & Viruses
☐	☐	☒	Other Waste

Implementation Requirements

H	M	L	
☐	☒	☐	Capital Costs
☐	☒	☐	O&M Costs
☐	☒	☐	Maintenance
☐	☐	☒	Training
☐	☐	☒	Staffing
☐	☐	☒	Administrative

H=High **M**=Medium **L**=Low

LEHI CITY
PIONEERING UTAH'S FUTURE

153 North 100 East
Lehi, UT 84043

Materials Adapted from Salt Lake County Engineering Division Guidance Document and Other Sources

EXHIBIT A

BMP: Sediment Trap — ST

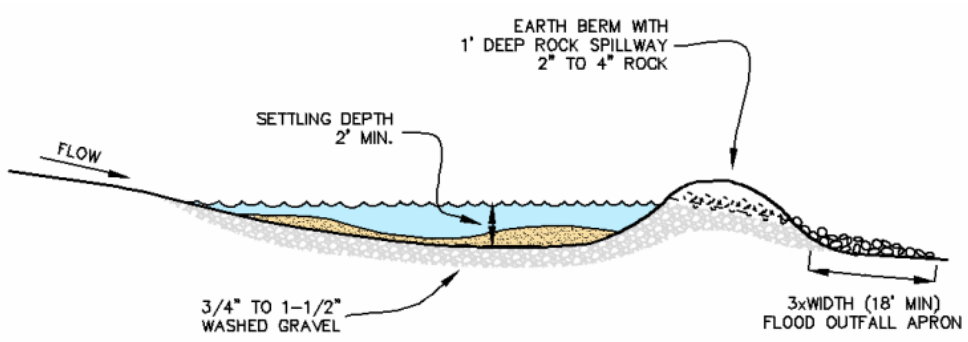

Description:

A sediment trap is a small excavated or bermed area where runoff from small drainage areas is detained and sediment can settle.

Application:

- Temporary control for runoff from disturbed areas of less than 3 acres
- Temporary control for discharge from diversion dike, surface benching, or other temporary drainage measures

Installation / Application Criteria:

- Design basin for site specific location
- Excavate basin or construct compacted berm containment
- Construct outfall spillway with apron
- Provide downstream silt fence if necessary

Limitations:

- Should be sized based on anticipated runoff, sediment loading, and drainage area size
- May require silt fence at outlet for entrapment of very fine silts and clays

Maintenance:

- Inspect after each rainfall event and at a minimum of once every two weeks
- Repair any damage to berm, spillway, or sidewalls
- Remove accumulated sediment as it reaches 2/3 height of available storage
- Check outlet for sedimentation/erosion of downgradient area and remediate as necessary. Install silt fence if sedimentation is apparent

Objectives

☐ Housekeeping Practices
☐ Contain Waste
☐ Minimize Disturbed Areas
☐ Stabilize Disturbed Areas
☐ Protect Slopes/Channels
☐ Control Site Perimeter
☒ Control Internal Erosion

Targeted Pollutants

	H	M	L	
	☒	☐	☐	Sediment
	☐	☐	☒	Nutrients
	☐	☐	☒	Heavy Metals
	☐	☒	☐	Toxic Materials
	☐	☐	☒	Oil & Grease
	☐	☐	☒	Floatable Materials
	☐	☐	☒	Bacteria & Viruses
	☐	☐	☒	Other Waste

Implementation Requirements

	H	M	L
	☐	☒	☐	Capital Costs
	☐	☒	☐	O&M Costs
	☐	☐	☒	Maintenance
	☐	☐	☒	Training
	☐	☐	☒	Staffing
	☐	☐	☒	Administrative

H=High **M**=Medium **L**=Low

LEHI CITY
PIONEERING UTAH'S FUTURE

153 North 100 East
Lehi, UT 84043

Materials Adapted from Salt Lake County Engineering Division Guidance Document and Other Sources

EXHIBIT A

BMP: Temporary Drains and Swales — TDS

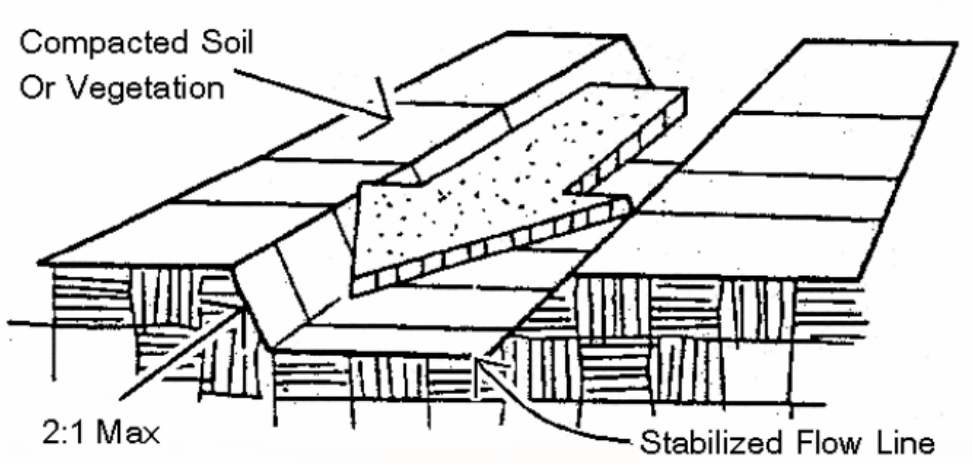

Description:

Temporary drains and swales are used to divert off-site runoff around the construction site or divert runoff from stabilized areas around disturbed areas.

Application:

- Temporary drains and swales are appropriate for diverting upslope runoff around unstabilized or disturbed areas of the construction site
- Prevent slope failures, prevent damage to adjacent property, prevent erosion and transport of sediments into water ways, increases the potential for infiltration, or divert sediment-laden runoff into sediment basins or traps

Installation / Application Criteria:

- Temporary drainage swales will effectively convey runoff and avoid erosion if built properly
- Size temporary drainage swales using local drainage design criteria. A permanent drainage channel must be designed by a professional engineer (see the local drainage design criteria for proper design)
- At a minimum, the drain/swale should conform to predevelopment drainage patterns and capacities
- Construct the drain/swale with an uninterrupted positive grade to a stabilized outlet. Provide erosion protection or energy dissipation measures if the flow out of the drain or swale can reach an erosive velocity

Limitations:

- Temporary drains and swales or any other diversion of runoff should not adversely impact upstream or downstream properties
- Temporary drains and swales must conform to local floodplain management requirements

Maintenance:

- Inspect weekly and after each rainfall event
- Repair any erosion immediately
- Remove any sediment that builds up in the swale and restricts its flow capacity

Objectives

☐ Housekeeping Practices
☐ Contain Waste
☐ Minimize Disturbed Areas
☐ Stabilize Disturbed Areas
☒ Protect Slopes/Channels
☒ Control Site Perimeter
☒ Control Internal Erosion

Targeted Pollutants

	H	M	L	
	☒	☐	☐	Sediment
	☐	☐	☒	Nutrients
	☐	☐	☒	Heavy Metals
	☐	☐	☒	Toxic Materials
	☐	☐	☒	Oil & Grease
	☐	☐	☒	Floatable Materials
	☐	☐	☒	Bacteria & Viruses
	☐	☐	☒	Other Waste

Implementation Requirements

	H	M	L	
	☐	☒	☐	Capital Costs
	☐	☐	☒	O&M Costs
	☐	☐	☒	Maintenance
	☐	☐	☒	Training
	☐	☐	☒	Staffing
	☐	☐	☒	Administrative

H=High **M**=Medium **L**=Low

LEHI CITY
PIONEERING UTAH'S FUTURE

153 North 100 East
Lehi, UT 84043

Materials Adapted from Salt Lake County Engineering Division Guidance Document and Other Sources

EXHIBIT A

BMP: Temporary and Permanent Seeding — TPS

Description:

Temporary seeding/establishment of short-term cover by application of rapidly germinating seed mix (alternatively hydroseeding may be utilized). Permanent seeding/establishment of final term cover by application of perennial seed mix (alternatively sod may be utilized).

Application:

Disturbed areas that are at final grade and which will not be disturbed by continuing activities on site. Alo areas that are not at final grade, but which will be left untouched in excess of one year.

Recommended Seed Mix:

The recommended seed mix will be dependent on site specific information such as elevation, exposure, soils, water available and topography. Check with the County Extension Service for recommended mixes for site specific conditions:

Utah State University Extension Service

28 E. State Street (Room 20D)

Farmington, Utah 84025

Phone: (801) 451-3412

Limitations:

- Limited to areas that will not be subject to traffic or high usage
- May require irrigation and fertilizer which creates potential for impacting runoff quality
- May only be applied during appropriate planting season, temporary cover is required until that time

Installation:

- Roughen soil to a depth of 2 inches. Add fertilizer, manure, or topsoil as necessary
- Evenly distribute seed using a commonly accepted method such as; breast seeding, drilling, hydroseeding
- Use a seed mix appropriate for soil and location that will provide rapid germination and growth. Check with County for recommended mix and application rate.
- Cover area with mulch if required due to steep slopes or unsuitable weather conditions

Maintenance:

- Provide irrigation as required to establish growth and to maintain plant cover through duration of project
- Reseed as necessary to provide 75% coverage
- Remediate any areas damaged by erosion or traffic
- When 75% coverage is achieved, inspect monthly for damage and remediate as necessary

Objectives

☐ Housekeeping Practices
☐ Contain Waste
☐ Minimize Disturbed Areas
☒ Stabilize Disturbed Areas
☒ Protect Slopes/Channels
☐ Control Site Perimeter
☐ Control Internal Erosion

Targeted Pollutants

	H	M	L
Sediment	☒	☐	☐
Nutrients	☒	☐	☐
Heavy Metals	☐	☐	☒
Toxic Materials	☐	☐	☒
Oil & Grease	☐	☐	☒
Floatable Materials	☐	☐	☒
Bacteria & Viruses	☐	☐	☒
Other Waste	☐	☐	☒

Implementation Requirements

	H	M	L
Capital Costs	☐	☒	☐
O&M Costs	☐	☐	☒
Maintenance	☐	☒	☐
Training	☐	☐	☒
Staffing	☐	☐	☒
Administrative	☐	☐	☒

H=High **M**=Medium **L**=Low

LEHI CITY

153 North 100 East
Lehi, UT 84043

Materials Adapted from Salt Lake County Engineering Division Guidance Document and Other Sources

EXHIBIT A

BMP: Temporary Stream Crossing — TSC

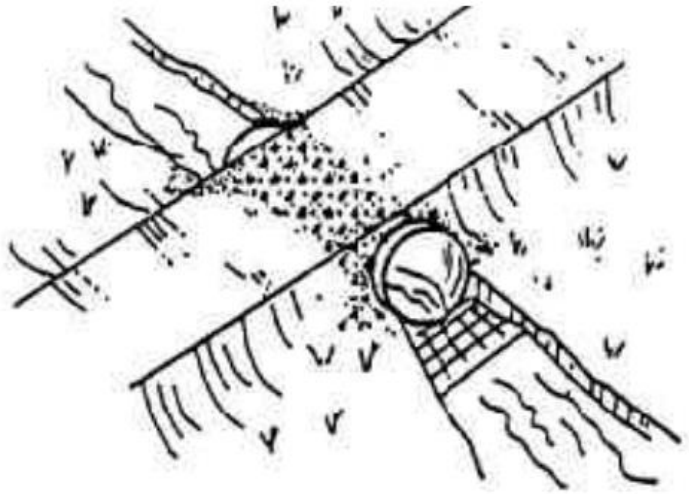

Description:

A temporary access stream crossing is a temporary culvert, ford, or bridge placed across a waterway to provide access for construction purposes for a period of less than one year. Temporary access crossings are not intended to be used to maintain traffic for the general public.

Application:

Temporary stream crossings should be installed at all designated crossings of perennial and intermittent streams on the construction site, as well as for dry channels which may be significantly eroded by construction traffic.

Installation / Application Criteria:

Requires knowledge of stream flows and soil strength and should be designed under the direction of a Utah registered engineer with knowledge of both hydraulics and construction loading requirements for structures.

Limitations:

- May be expensive for a temporary improvement
- Requires other BMPs to minimize soil disturbance during installation and removal
- Fords should only be used in dry weather
- A stream alteration permit may be required, contact the Utah Division of Water Rights before implementation

Maintenance:

- Inspect weekly and after each significant rainfall, including assessment of foundations
- Periodically remove silt from crossings
- Replace lost aggregate from inlets and outlets of culverts

Objectives

☒ Housekeeping Practices
☐ Contain Waste
☒ Minimize Disturbed Areas
☒ Stabilize Disturbed Areas
☒ Protect Slopes/Channels
☐ Control Site Perimeter
☐ Control Internal Erosion

Targeted Pollutants

	H	M	L
Sediment	☒	☐	☐
Nutrients	☐	☐	☒
Heavy Metals	☐	☐	☒
Toxic Materials	☐	☐	☒
Oil & Grease	☐	☒	☐
Floatable Materials	☐	☒	☐
Bacteria & Viruses	☐	☐	☒
Other Waste	☐	☐	☒

Implementation Requirements

	H	M	L
Capital Costs	☐	☒	☐
O&M Costs	☐	☐	☒
Maintenance	☐	☒	☐
Training	☐	☐	☒
Staffing	☐	☐	☒
Administrative	☐	☐	☒

H=High **M**=Medium **L**=Low

LEHI CITY

153 North 100 East
Lehi, UT 84043

Materials Adapted from Salt Lake County Engineering Division Guidance Document and Other Sources

EXHIBIT A

BMP: Vehicle and Equipment Cleaning — VEC

Description:

Prevent or reduce the discharge of pollutants to storm water from vehicle and equipment cleaning by using off-site facilities, washing in designated and contained areas only, eliminating discharges to the storm drain by infiltrating or recycling the wash water, and/or training employees and subcontractors.

Installation / Application Criteria:

- Use off-site commercial washing businesses as much as possible. Washing vehicles and equipment outdoors or in areas where wash water flows onto paved surfaces or into drainage pathways can pollute storm water. If you wash large numbers of vehicles or pieces of equipment, consider conducting this work at an off-site commercial business. These businesses are better equipped to handle and dispose of the wash waters properly. Performing this work off-site can also be economical by eliminating the need for a separate washing operation at your site.
- If washing must occur on-site, use designated, bermed wash areas to prevent wash water contact with storm water, creeks, rivers, and other water bodies. The wash area can be sloped for wash water collection and subsequent infiltration into the ground.
- Use as little water as possible to avoid having to install erosion and sediment controls for the wash area. Use phosphate-free biodegradable soaps. Educate employees and subcontractors on pollution prevention measures. Do not permit steam cleaning on-site. Steam cleaning can generate significant pollutant concentrations.

Limitations:

- Even phosphate-free, biodegradable soaps have been shown to be toxic to fish before the soap degrades
- Sending vehicles/equipment off-site should be done in conjunction with Stabilized Construction Entrance

Maintenance:

- Minimal, some berm repair may be necessary

Objectives

☒ Housekeeping Practices
☐ Contain Waste
☐ Minimize Disturbed Areas
☐ Stabilize Disturbed Areas
☐ Protect Slopes/Channels
☒ Control Site Perimeter
☒ Control Internal Erosion

Targeted Pollutants

	H	M	L	
	☐	☐	☒	Sediment
	☐	☐	☒	Nutrients
	☐	☐	☒	Heavy Metals
	☐	☒	☐	Toxic Materials
	☐	☒	☐	Oil & Grease
	☐	☐	☒	Floatable Materials
	☐	☐	☒	Bacteria & Viruses
	☐	☐	☒	Other Waste

Implementation Requirements

	H	M	L
Capital Costs	☐	☒	☐
O&M Costs	☐	☐	☒
Maintenance	☐	☒	☐
Training	☐	☐	☒
Staffing	☐	☐	☒
Administrative	☐	☐	☒

H=High **M**=Medium **L**=Low

LEHI CITY

153 North 100 East
Lehi, UT 84043

Materials Adapted from Salt Lake County Engineering Division Guidance Document and Other Sources

EXHIBIT A

BMP: Vehicle and Equipment Fueling — VEF

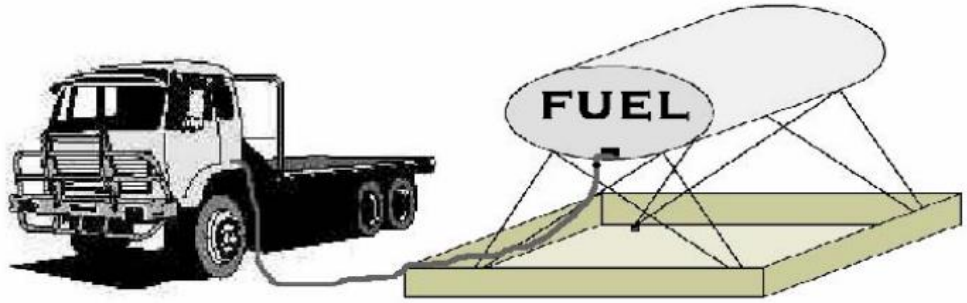

Description:

Prevent fuel spills and leaks and reduce their impacts to storm water by using offsite facilities, fueling in designated areas only, enclosing or covering stored fuel, implementing spill controls, and training employees and subcontractors.

Installation / Application Criteria:

- Use off-site fueling stations as much as possible. Fueling vehicles and equipment outdoors or in areas where fuel may spill/leak onto paved surfaces or into drainage pathways can pollute storm water. If you fuel a large number of vehicles or pieces of equipment, consider using an off-site fueling station. These businesses are better equipped to handle fuel and spills properly. Performing this work off-site can also be economical by eliminating the need for a separate fueling area at your site.
- If fueling must occur on-site, use designated areas, located away from drainage courses, to prevent the run on of storm water and the runoff of spills. Discourage "topping-off" of fuel tanks.
- Always use secondary containment, such as a drain pan or drop cloth, when fueling to catch spills/leaks. Place a stockpile of spill cleanup materials where it will be readily accessible. Use adsorbent materials on small spills rather than hosing down or burying the spill. Remove the adsorbent materials promptly and dispose of properly.
- Carry out all Federal and State requirements regarding stationary above ground storage tanks. (40 CF Sub. J) Avoid mobile fueling of mobile construction equipment around the site; rather, transport the equipment to designated fueling area. With the exception of tracked equipment such as bulldozers and perhaps forklifts, most vehicles should be able to travel to a designated area with little lost time. Train employees and subcontractors in proper fueling and cleanup procedures.

Limitations:

Sending vehicles/equipment off-site should be done in conjunction with Stabilized Construction Entrance.

Maintenance:

- Keep ample supplies of spill cleanup materials on-site
- Inspect fueling areas and storage tanks on a regular schedule

Objectives

☒ Housekeeping Practices
☐ Contain Waste
☐ Minimize Disturbed Areas
☐ Stabilize Disturbed Areas
☐ Protect Slopes/Channels
☐ Control Site Perimeter
☐ Control Internal Erosion

Targeted Pollutants

	H	M	L	
	☐	☐	☒	Sediment
	☐	☐	☒	Nutrients
	☐	☐	☒	Heavy Metals
	☐	☒	☐	Toxic Materials
	☐	☒	☐	Oil & Grease
	☐	☐	☒	Floatable Materials
	☐	☐	☒	Bacteria & Viruses
	☐	☐	☒	Other Waste

Implementation Requirements

	H	M	L
Capital Costs	☐	☒	☐
O&M Costs	☐	☐	☒
Maintenance	☐	☒	☐
Training	☐	☒	☐
Staffing	☐	☐	☒
Administrative	☐	☐	☒

H=High **M**=Medium **L**=Low

LEHI CITY
PIONEERING UTAH'S FUTURE

153 North 100 East
Lehi, UT 84043

Materials Adapted from Salt Lake County Engineering Division Guidance Document and Other Sources

EXHIBIT A

BMP: Waste Disposal — WD

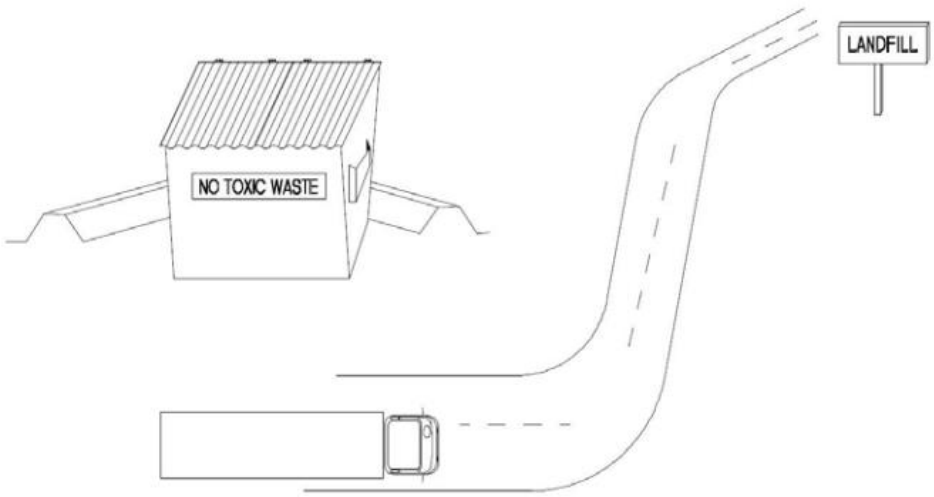

Description:

Controlled storage and disposal of solid waste generated by construction activities.

Application:

All construction sites.

Installation / Application Criteria:

- Designate one or several waste collection areas with easy access for construction vehicles and personnel. Ensure no waterways or storm drainage inlets are located near the waste collection areas
- Construct compacted earthen berm (See Earth Berm Barrier Information Sheet), or similar perimeter containment around collection area for impoundment in the case of spills
- Ensure all on site personnel are aware of and utilize designated waste collection area properly and for intended use only (e.g. all toxic, hazardous, or recyclable materials shall be properly disposed of separately from general construction waste)
- Arrange for periodic pickup, transfer and disposal of collected waste at an authorized disposal location. Include regular portable toilet service is water management activities.

Limitations:

On-site personnel are responsible for correct disposal of waste.

Maintenance:

- Discuss waste management procedures at progress meetings
- Collect site trash daily and deposit in containers at designated collection areas
- Randomly check disposed materials for any unauthorized waste (e.g., toxic materials).

Objectives

☒ Housekeeping Practices
☒ Contain Waste
☐ Minimize Disturbed Areas
☐ Stabilize Disturbed Areas
☐ Protect Slopes/Channels
☐ Control Site Perimeter
☐ Control Internal Erosion

Targeted Pollutants

H	M	L	
☐	☐	☐	Sediment
☐	☐	☐	Nutrients
☐	☐	☐	Heavy Metals
☒	☐	☐	Toxic Materials
☐	☒	☐	Oil & Grease
☒	☐	☐	Floatable Materials
☐	☐	☐	Bacteria & Viruses
☒	☐	☐	Other Waste

Implementation Requirements

H	M	L	
☒	☐	☐	Capital Costs
☒	☐	☐	O&M Costs
☐	☒	☐	Maintenance
☒	☐	☐	Training
☐	☐	☒	Staffing
☐	☐	☒	Administrative

H=High **M**=Medium **L**=Low

LEHI CITY
PIONEERING UTAH'S FUTURE

153 North 100 East
Lehi, UT 84043

Materials Adapted from Salt Lake County Engineering Division Guidance Document and Other Sources

EXHIBIT B

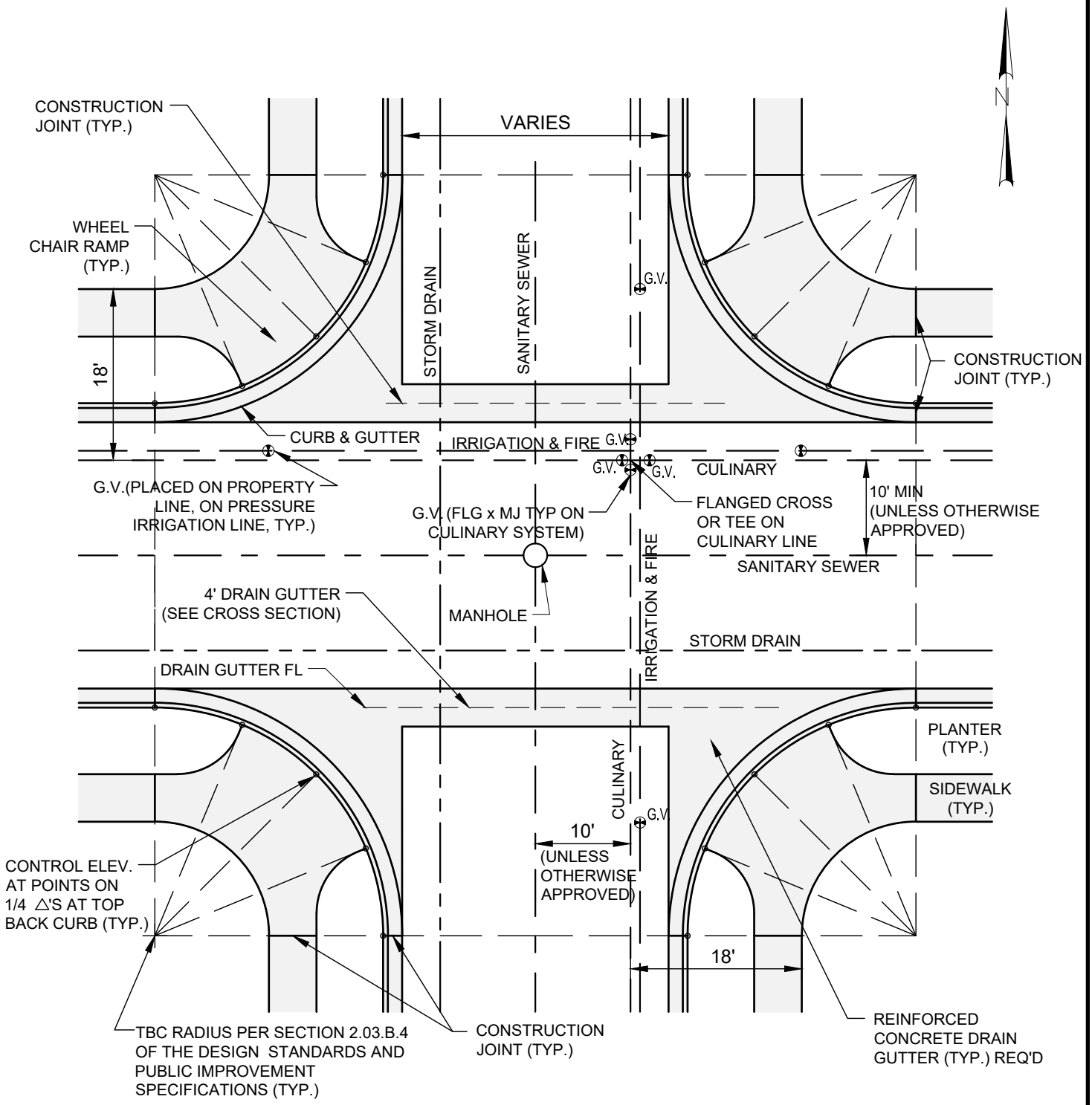

LEHI CITY

LEHI CITY STANDARD DETAIL

STREET INTERSECTION & UTILITY LOCATION

RD-01

DATE: JANUARY 2022

EXHIBIT B

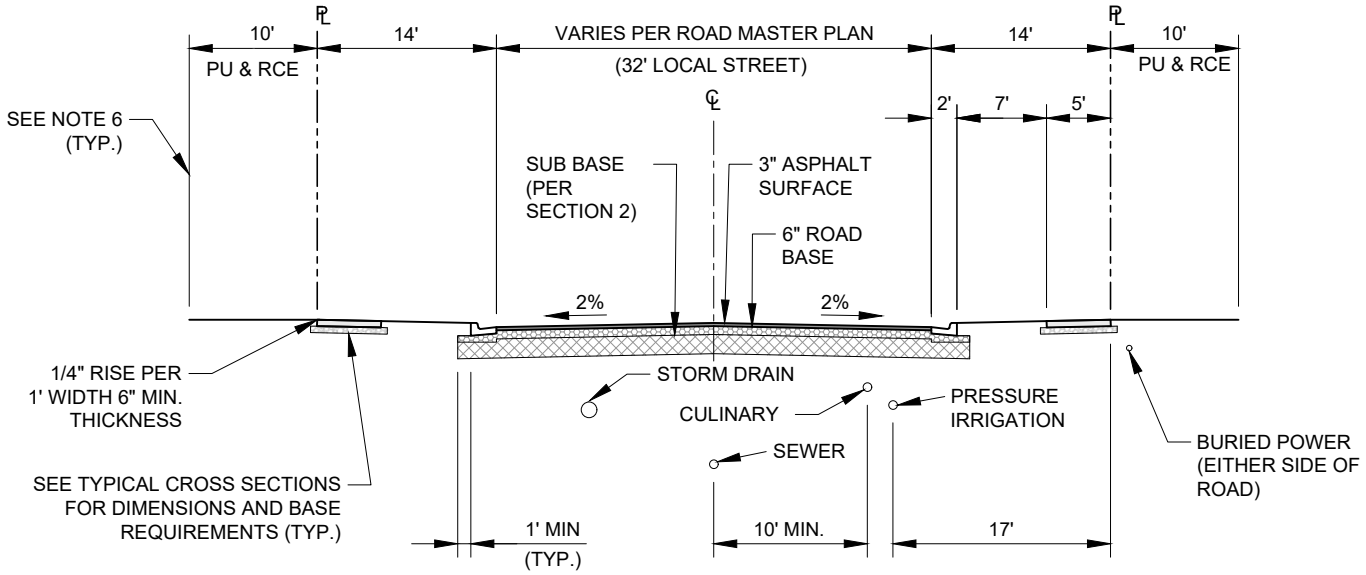

STANDARD STREET SECTION

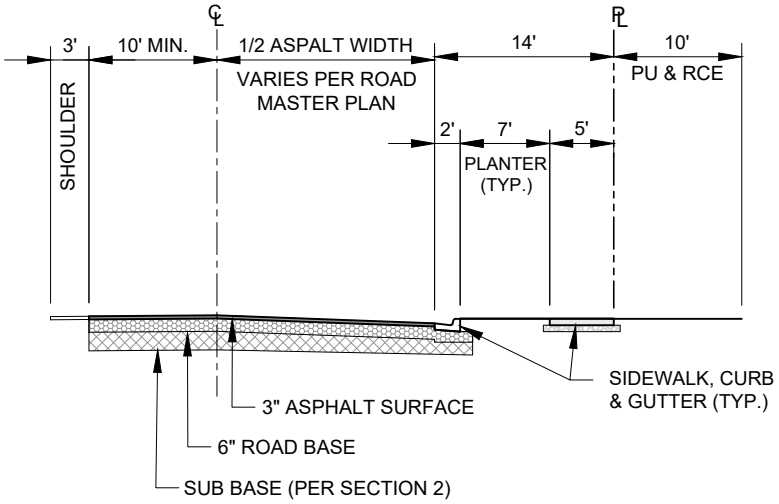

HALF WIDTH STREET SECTION

NOTES:

1. VARIANCES TO THE UTILITY LOCATIONS OR CROSS SECTION SHOWN MUST BE APPROVED BY LEHI CITY.
2. SLOPE EASEMENTS REQUIRED FOR CUT OR FILL SLOPES WHICH EXTEND OUTSIDE RIGHT-OF-WAY.
3. SELECT GRAVEL SUBBASE AS REQUIRED BY SECTION 2.
4. FIRE HYDRANTS, BLOWOFFS, MAIL BOXES, ETC. MUST BE PLACED IN PLANTER STRIP OR FOR ROADWAYS WITHOUT PLANTERS, THESE ITEMS MUST BE PLACED BEHIND BACK OF SIDEWALK AS PER APPROPRIATE STANDARD DETAILS.
5. CURB AND SIDEWALK SHALL REMAIN UNOBSTRUCTED.
6. PUBLIC UTILITY AND ROADWAY CONSTRUCTION EASEMENT (PU & RCE).
7. REQUIREMENTS FOR SIDEWALK MAY BE WAIVED FOR DEVELOPMENTS WITHIN LIGHT INDUSTRIAL OR INDUSTRIAL ZONING DISTRICTS OR WITHIN NON-RESENTIAL P.U.D.'S AS DEEMED APPROPRIATE BY THE DEVELOPMENT REVIEW COMMITTEE AND PLANNING COMMISSION.

LEHI CITY

LEHI CITY STANDARD DETAIL

STANDARD STREET CROSS SECTION & UTILITY LOCATIONS

RD-02

DATE: *MAY 2024*

EXHIBIT B

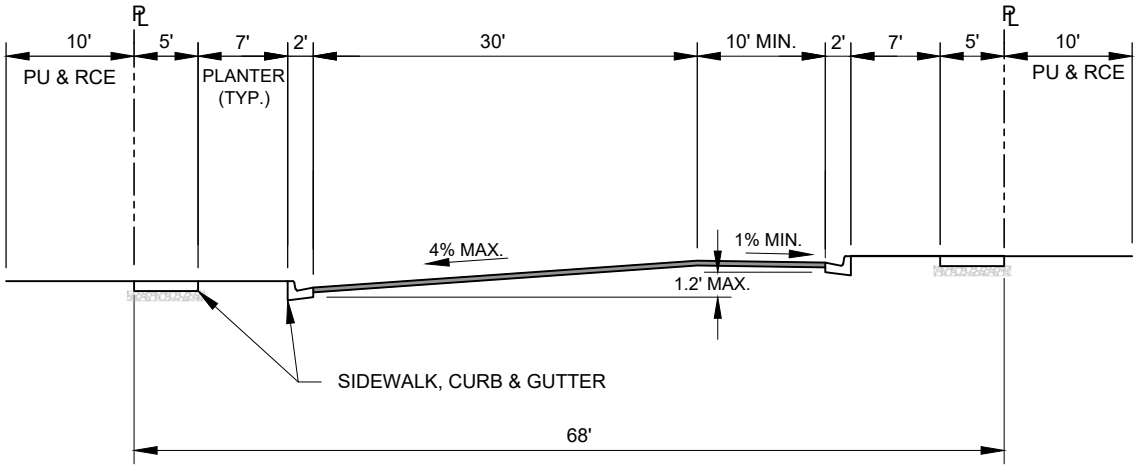

COLLECTOR ROAD

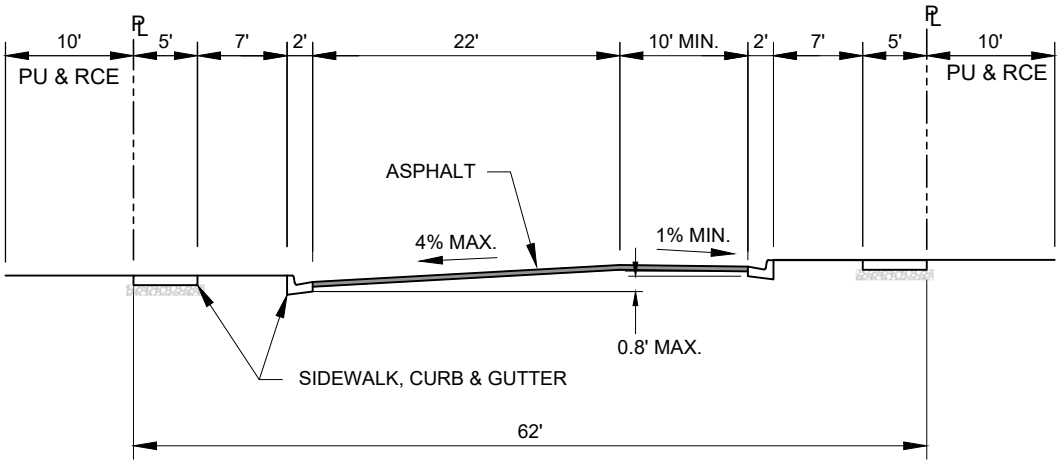

MINOR STREET

NOTES:

1. THE USE OF THESE CROSS SECTIONS IS SUBJECT TO THE APPROVAL OF THE CITY ENGINEER.
2. PUBLIC UTILITY AND ROADWAY CONSTRUCTION EASEMENT (PU & RCE).

LEHI CITY

LEHI CITY STANDARD DETAIL

CURBS AT UNEQUAL ELEVATIONS

RD-03

DATE: *MAY 2024*

EXHIBIT B

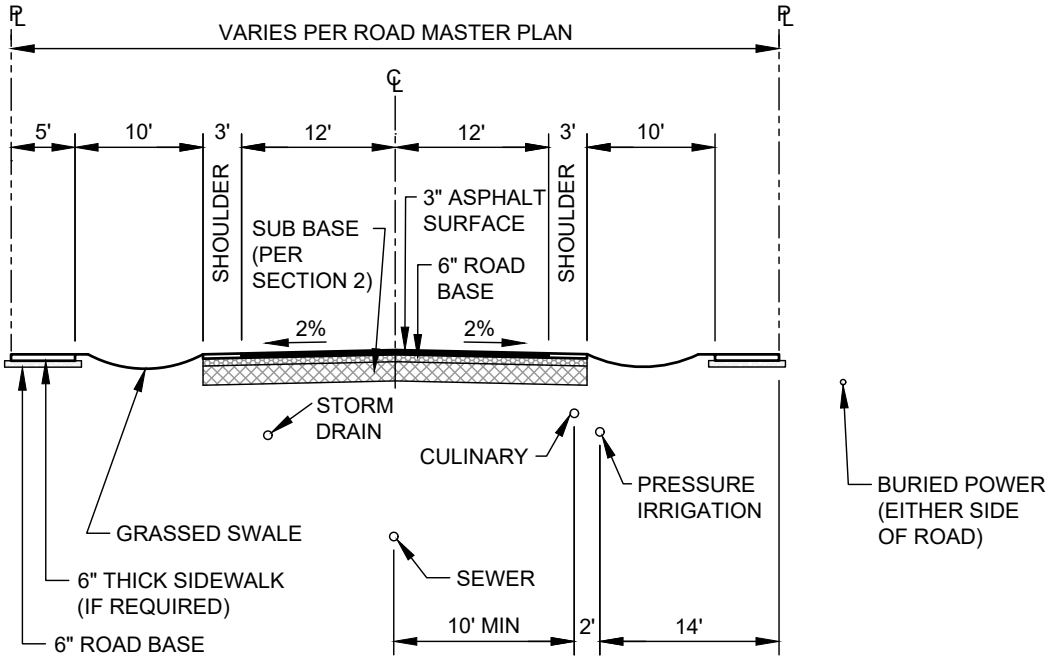

RURAL STREET SECTION

LEHI CITY

LEHI CITY STANDARD DETAIL	
RURAL STREET CROSS SECTION AND UTILITY LOCATIONS	
RD-04	DATE: *JANUARY 20*

EXHIBIT B

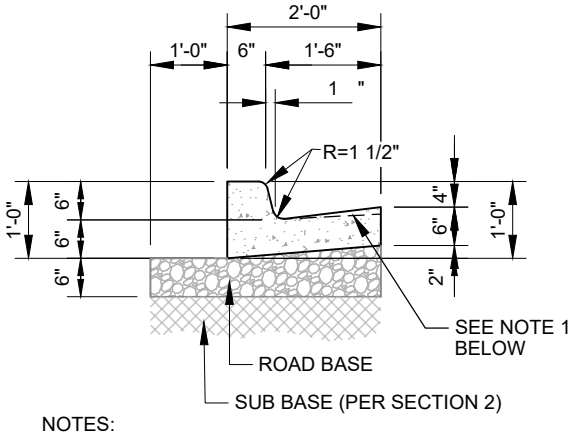

NOTES:
1. PAN OF GUTTER SHALL BE FLATTENED TO A 5% MAX. GRADE WITHIN "CLEAR SPACE" OF ADA RAMPS

HIGH BACK CURB & GUTTER

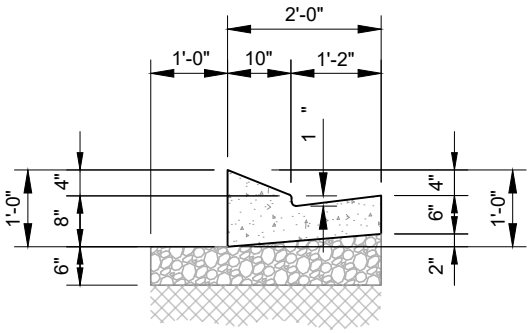

NOTES:
1. THIS CROSS SECTION IS ONLY FOR COMMERCIAL, INDUSTRIAL ZONES AND TEMPORARY TURNAROUNDS.
2. THE USE OF THIS CROSS SECTION IS SUBJECT TO APPROVAL OF THE CITY ENGINEER

MODIFIED CURB & GUTTER (MOUNTABLE TYPE)

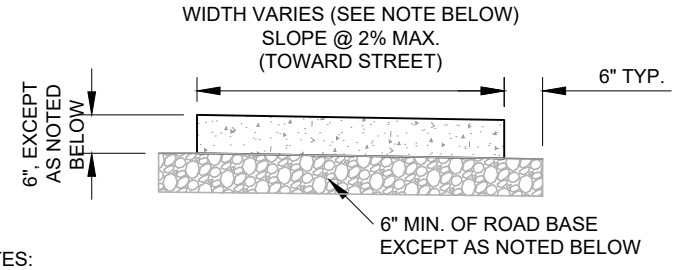

NOTES:
1. 5' SIDEWALK WIDTH WHEN USED IN CONJUNCTION WITH PLANTER.
   5' SIDEWALK WIDTH AGAINST CURB & GUTTER.
   6' SIDEWALK WIDTH WHEN USED AGAINST A CURB & GUTTER WITHIN A PARKING LOT.
2. SIDEWALK THICKNESS MAY BE 5" AND ROAD BASE THICKNESS 4" OUTSIDE OF SUBDIVISIONS IN AREA WITH NO ACCESSES AS APPROVED BY THE REVIEWING DEPARTMENTS.

SIDEWALK

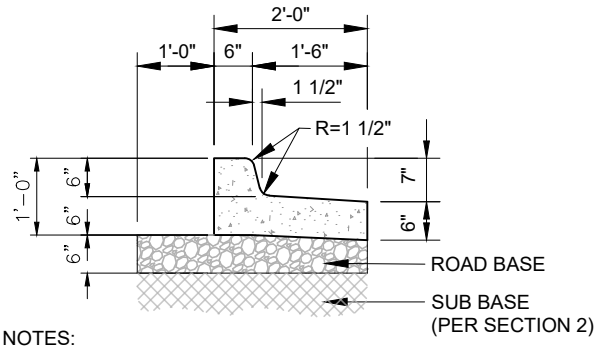

NOTES:
1. THE USE OF THIS CROSS SECTION IS SUBJECT TO APPROVAL OF THE CITY ENGINEER

REVERSE SLOPE CURB & GUTTER

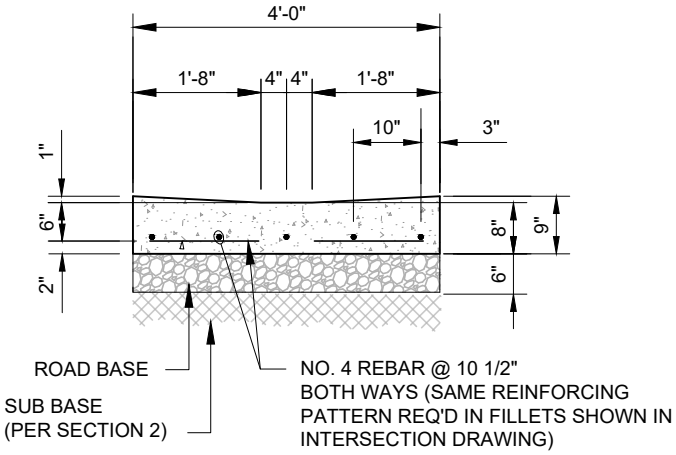

4' DRAIN GUTTER

NOTES:

1. PLACE EXPANSION JOINTS (JOINT FILLER MATERIAL) EVERY 50' ALONG CURB, GUTTER & SIDEWALK SECTIONS. JOINTS TO BE PLACED THE FULL DEPTH OF CONCRETE PLUS 1", FLUSH WITH TOP OF CONCRETE.
2. CONTRACTION JOINTS ALONG CURB & GUTTER SECTIONS SHOULD BE PLACED AT INTERVALS NOT TO EXCEED 10'.
3. CONTRACTION JOINTS ALONG SIDEWALK SECTIONS SHOULD BE PLACED AT INTERVALS MATCHING THE SIDEWALK WIDTH, EXCEPT WITH VERY WIDE CONCRETE SECTIONS WHERE CONTRACTION JOINT SPACING SHALL NOT EXCEED 2 TIMES THE SLAB THICKNESS IN FEET. FOR EXAMPLE THE MAXIMUM JOINT SPACING FOR A 4" THICK CONCRETE SLAB WOULD BE 8 FEET.
4. WHEN CURB, GUTTER OR SIDEWALK MUST BE REMOVED & REPLACED, FOLLOW WRITTEN GUIDELINES IN SECTION 5.

LEHI CITY

LEHI CITY STANDARD DETAIL	
CURB, GUTTER AND SIDEWALK	
RD-05	DATE: *JUNE 202*

EXHIBIT B

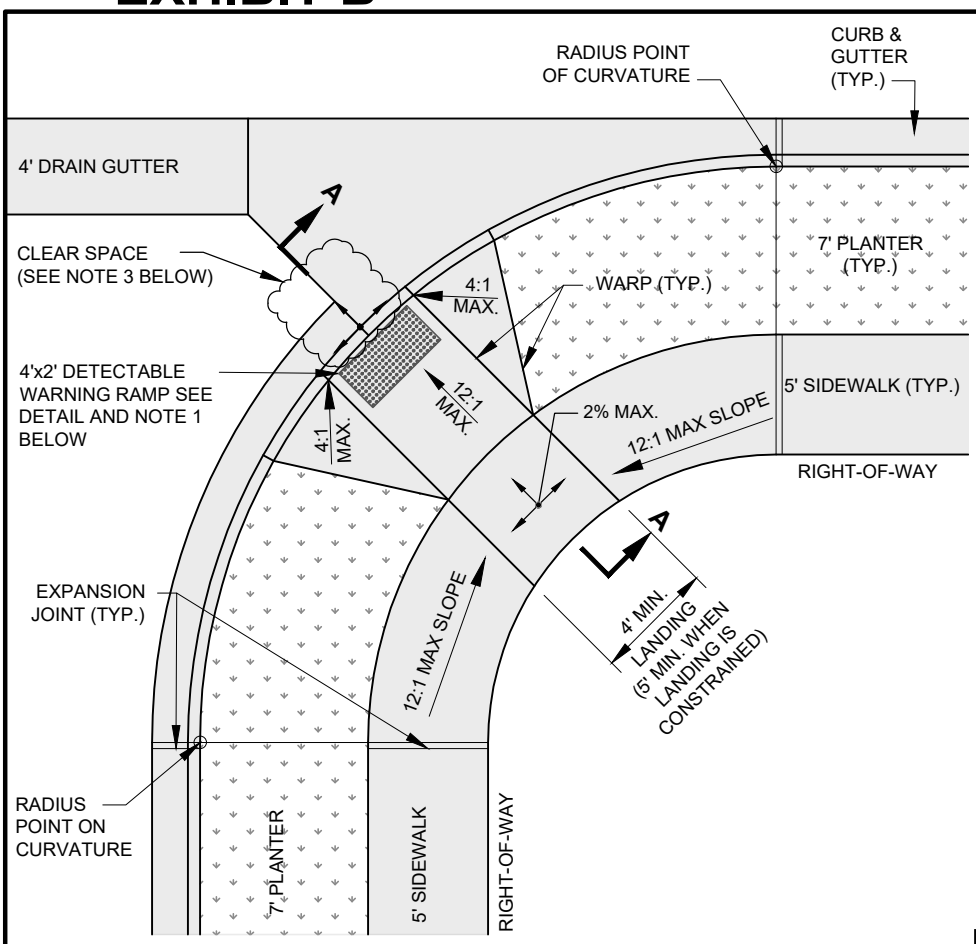

PLAN VIEW

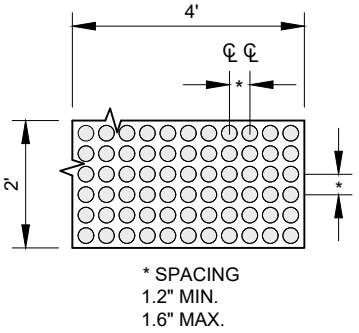

DETECTABLE RAMP DETAIL

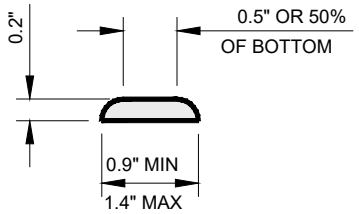

RAISED TRUNCATED DOME DETAIL

PUBLIC WORKS DEPARTMENT MUST APPROVE TYPES AND COLOR OF DETECTABLE WARNING DEVICES USED.

DETECTABLE WARNING DETAILS

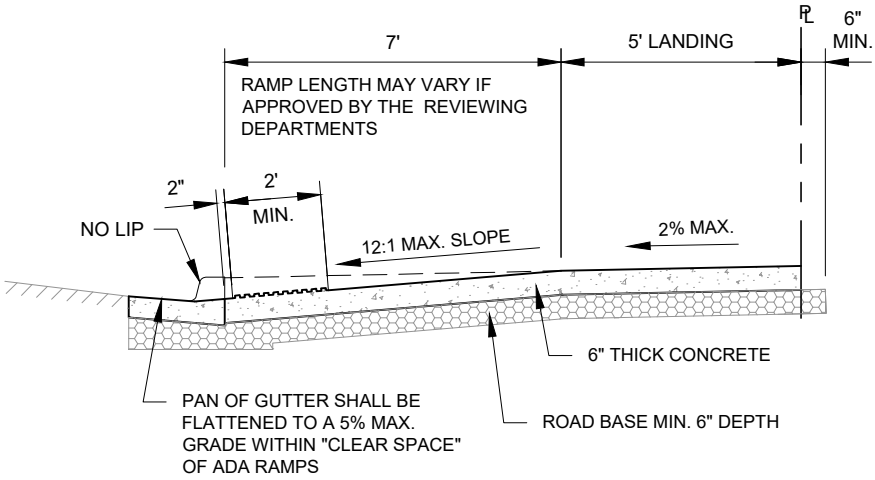

SECTION A-A

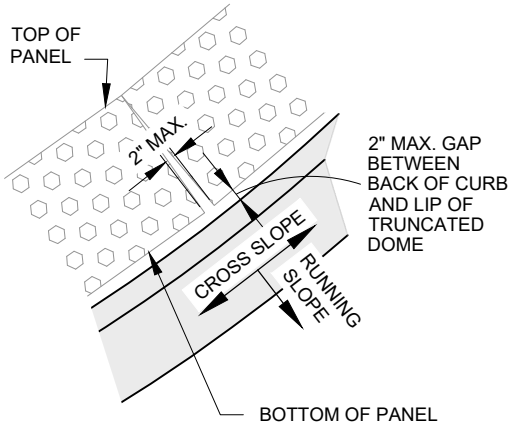

DETECTABLE WARNING SURFACE PANEL GAP DETAIL

GENERAL NOTES:

1. ROAD/FIELD GRADES MAY REQUIRE ADJUSTMENT AS PER APPROVAL BY PUBLIC WORKS DEPARTMENT
2. DETECTABLE WARNING SURFACES SHALL EXTEND (24 IN) MINIMUM IN THE DIRECTION OF TRAVEL AND THE FULL WIDTH OF THE CURB RAMP (EXCLUSIVE OF FLARES), THE LANDING, OR THE BLENDED TRANSITION.
3. 4'x4' MIN. CLEAR SPACE REQUIRED.
   a. MAX. 5% GRADE ALONG RUNNING SLOPE.
   b. CROSS SLOPE WITHIN CLEAR SPACE
      i. MAX. 2% GRADE WHEN EITHER LEG OF INTERSECTION IS STOP CONTROLLED
      ii. MAX. 5% GRADE WHEN INTERSECTION IS UNCONTROLLED OR SIGNAL CONTROLLED
4. PEDESTRIAN BUTTON (OR RELATED APPURTENANCES) SHALL BE 40" - 44" ABOVE LANDING AND A MAXIMUM OF 10" FROM THE LANDING.

LEHI CITY

LEHI CITY STANDARD DETAIL	
ADA RAMP PLANTER STRIP (AT INTERSECTION)	
RD-06	DATE: *JUNE 202*

EXHIBIT B

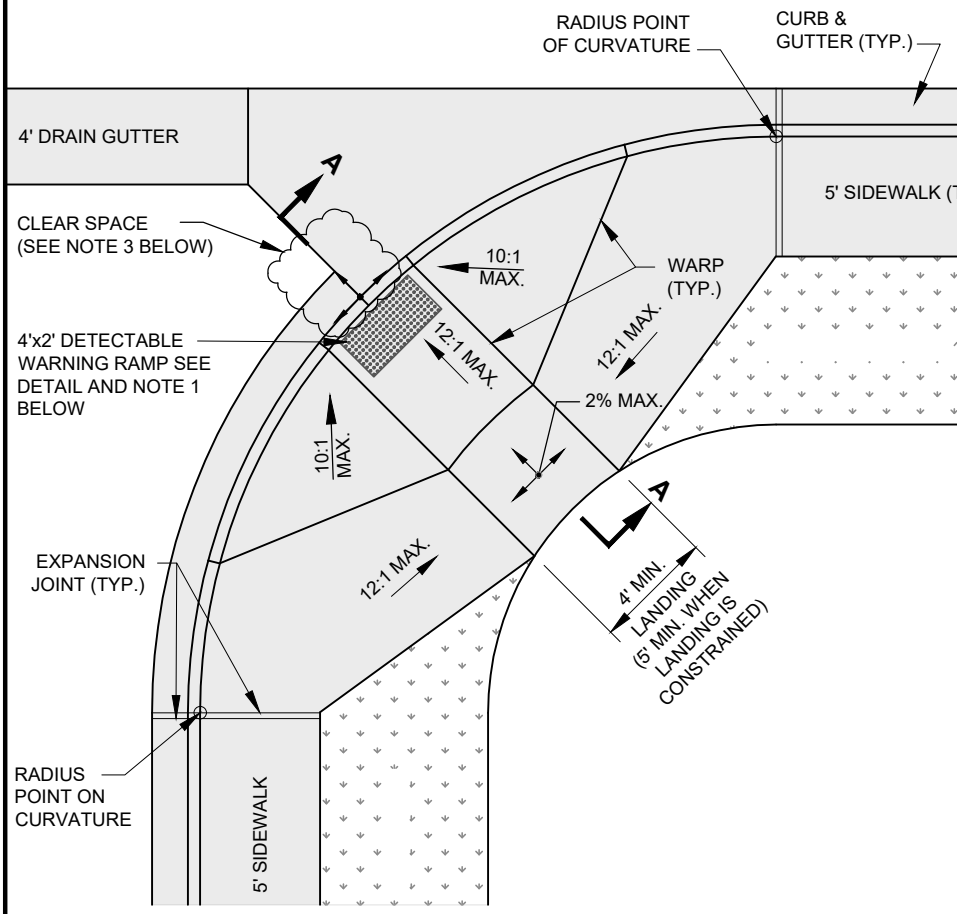

PLAN VIEW

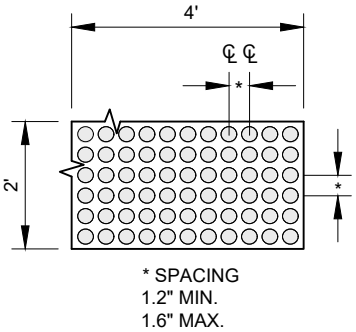

DETECTABLE RAMP DETAIL

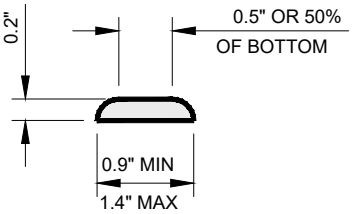

RAISED TRUNCATED DOME DETAIL

PUBLIC WORKS DEPARTMENT MUST APPROVE TYPES AND COLOR OF DETECTABLE WARNING DEVICES USED.

DETECTABLE WARNING DETAILS

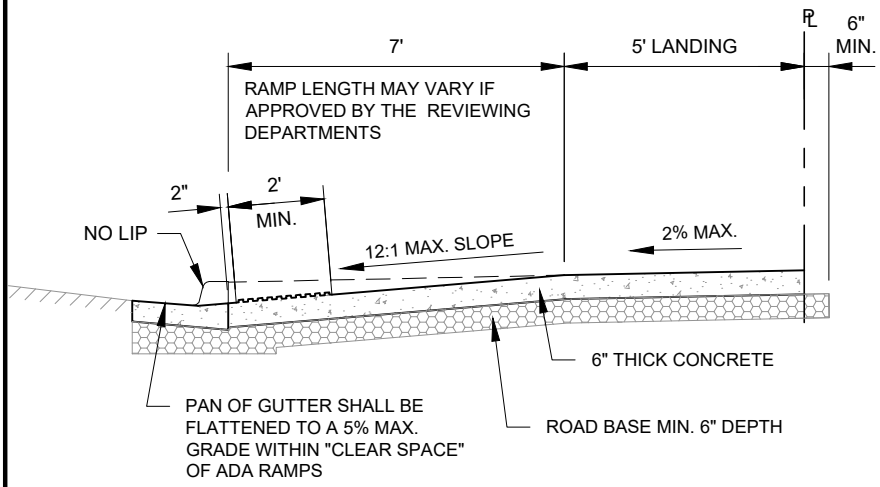

SECTION A-A

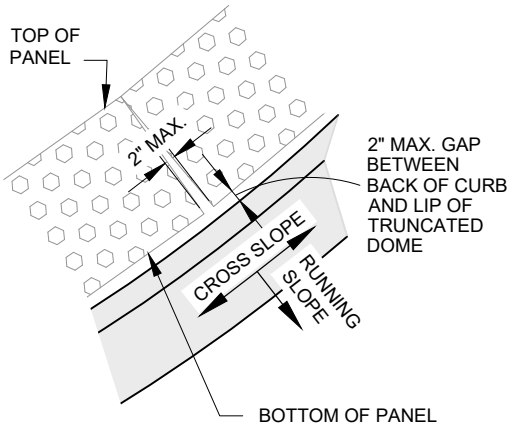

DETECTABLE WARNING SURFACE PANEL GAP DETAIL

GENERAL NOTES:

1. ROAD/FIELD GRADES MAY REQUIRE ADJUSTMENT AS PER APPROVAL BY PUBLIC WORKS DEPARTMENT
2. DETECTABLE WARNING SURFACES SHALL EXTEND (24 IN) MINIMUM IN THE DIRECTION OF TRAVEL AND THE FULL WIDTH OF THE CURB RAMP (EXCLUSIVE OF FLARES), THE LANDING, OR THE BLENDED TRANSITION.
3. 4'x4' MIN. CLEAR SPACE REQUIRED.
   a. MAX. 5% GRADE ALONG RUNNING SLOPE.
   b. CROSS SLOPE WITHIN CLEAR SPACE
      i. MAX. 2% GRADE WHEN EITHER LEG OF INTERSECTION IS STOP CONTROLLED
      ii. MAX. 5% GRADE WHEN INTERSECTION IS UNCONTROLLED OR SIGNAL CONTROLLED
4. PEDESTRIAN BUTTON (OR RELATED APPURTENANCES) SHALL BE 40" - 44" ABOVE LANDING AND A MAXIMUM OF 10" FROM THE LANDING.

LEHI CITY

LEHI CITY STANDARD DETAIL	
ADA RAMP COMBINATION CURB, GUTTER & SIDEWALK (AT INTERSECTION)	
RD-07	DATE: *JUNE 202*

EXHIBIT B

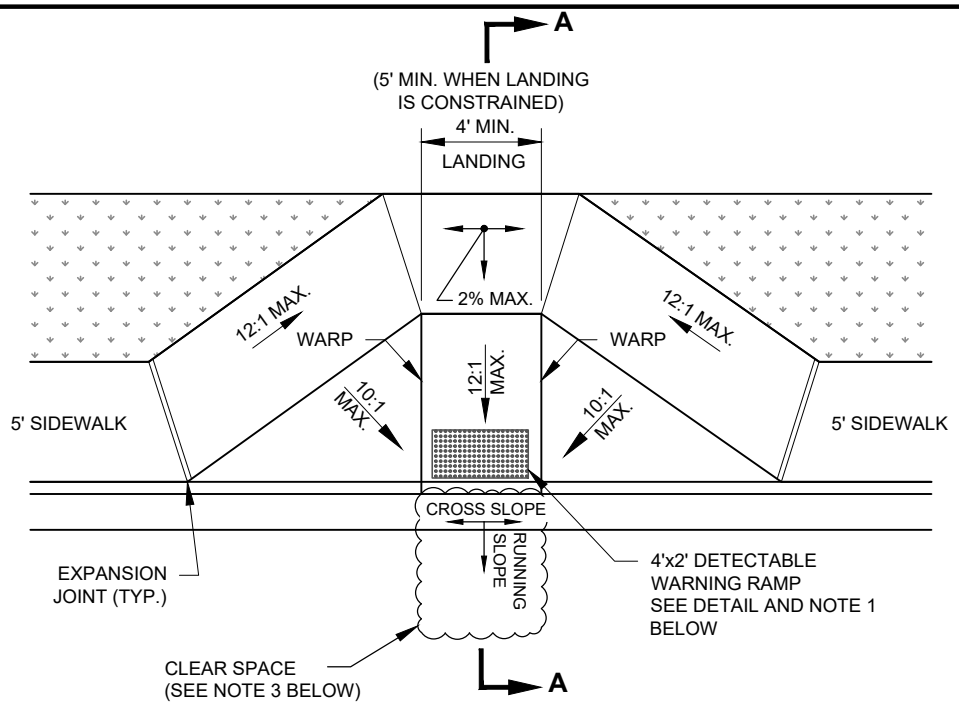

PLAN VIEW

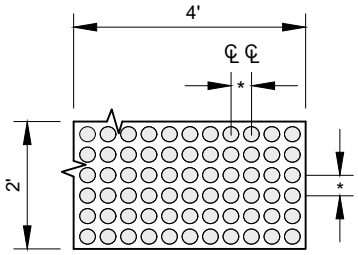

* SPACING
1.2" MIN.
1.6" MAX.

DETECTABLE RAMP DETAIL

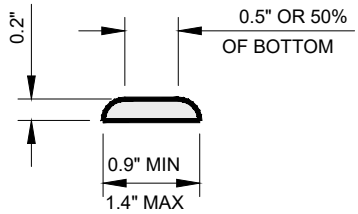

PUBLIC WORKS DEPARTMENT MUST APPROVE TYPES AND COLOR OF DETECTABLE WARNING DEVICES USED.

DETECTABLE WARNING DETAILS

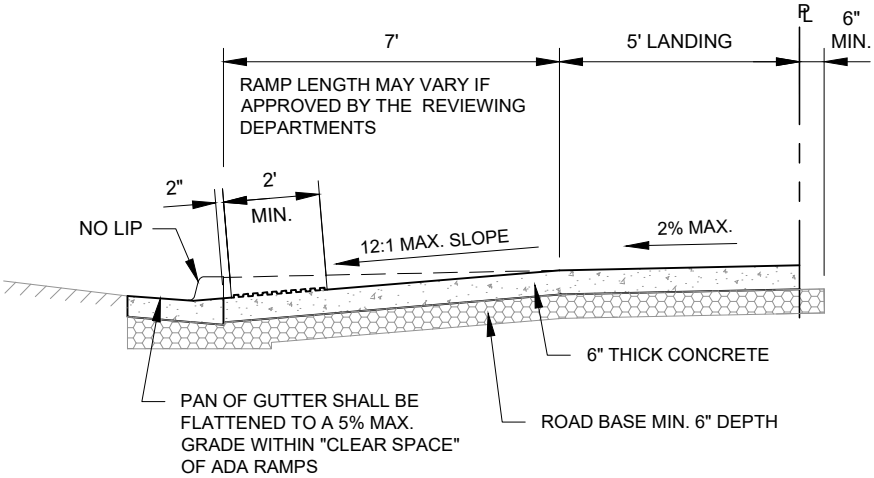

SECTION A-A

GENERAL NOTES:

1. ROAD/FIELD GRADES MAY REQUIRE ADJUSTMENT AS PER APPROVAL BY PUBLIC WORKS DEPARTMENT
2. DETECTABLE WARNING SURFACES SHALL EXTEND (24 IN) MINIMUM IN THE DIRECTION OF TRAVEL AND THE FULL WIDTH OF THE CURB RAMP (EXCLUSIVE OF FLARES), THE LANDING, OR THE BLENDED TRANSITION.
3. 4'x4' MIN. CLEAR SPACE REQUIRED.
   a. MAX. 5% GRADE ALONG RUNNING SLOPE.
   b. CROSS SLOPE WITHIN CLEAR SPACE
      i. MAX. 2% GRADE WHEN EITHER LEG OF INTERSECTION IS STOP CONTROLLED
      ii. MAX. 5% GRADE WHEN INTERSECTION IS UNCONTROLLED OR SIGNAL CONTROLLED
4. PEDESTRIAN BUTTON (OR RELATED APPURTENANCES) SHALL BE 40" - 44" ABOVE LANDING AND A MAXIMUM OF 10" FROM THE LANDING.

LEHI CITY

LEHI CITY STANDARD DETAIL	
ADA RAMP COMBINATION CURB, GUTTER & SIDEWALK (MID BLOCK)	
RD-08	DATE: *JUNE 202*

EXHIBIT B

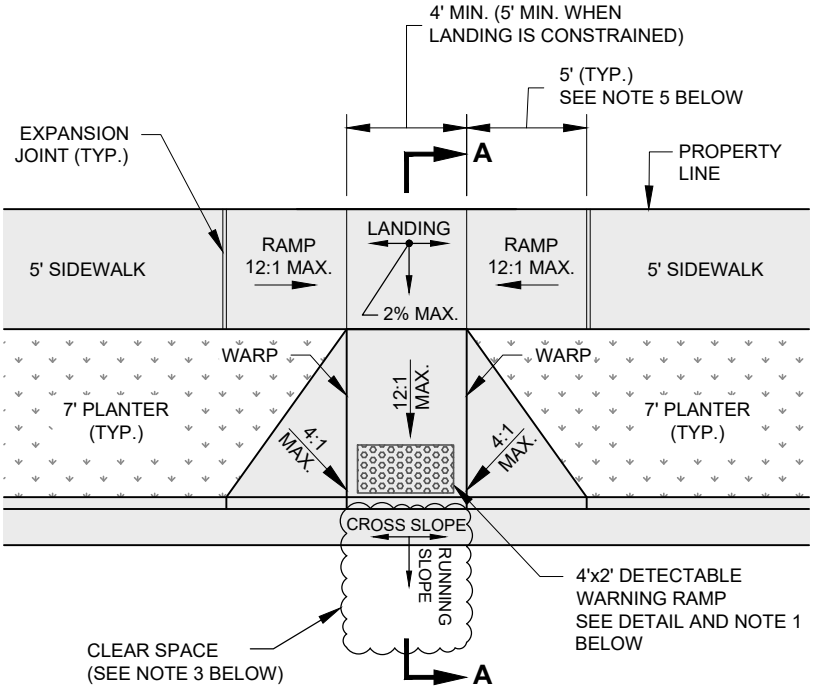

PLAN VIEW

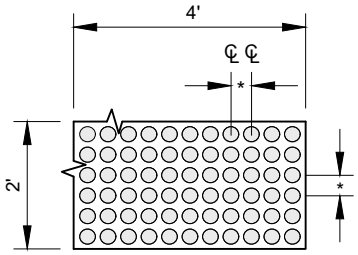

* SPACING
1.2" MIN.
1.6" MAX.

DETECTABLE RAMP DETAIL

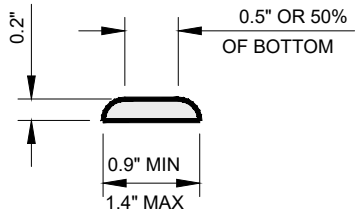

PUBLIC WORKS DEPARTMENT MUST APPROVE TYPES AND COLOR OF DETECTABLE WARNING DEVICES USED.

DETECTABLE WARNING DETAILS

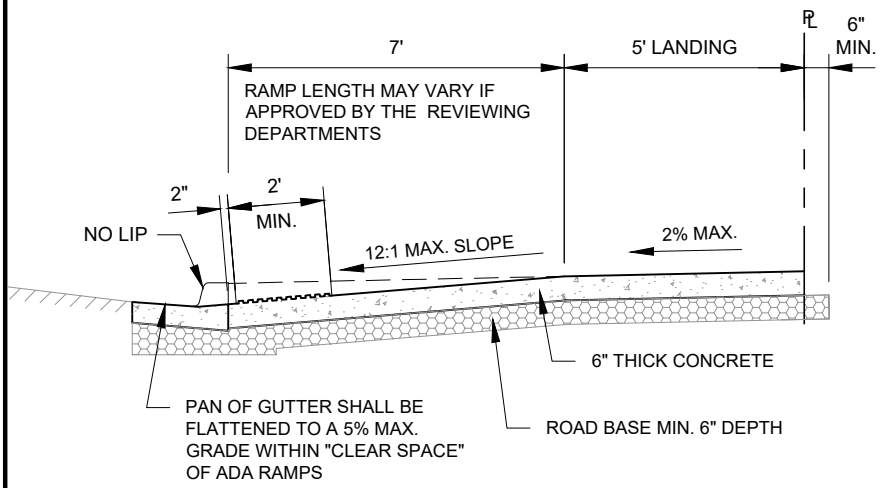

SECTION A-A

GENERAL NOTES:

1. ROAD/FIELD GRADES MAY REQUIRE ADJUSTMENT AS PER APPROVAL BY PUBLIC WORKS DEPARTMENT
2. DETECTABLE WARNING SURFACES SHALL EXTEND (24 IN) MINIMUM IN THE DIRECTION OF TRAVEL AND THE FULL WIDTH OF THE CURB RAMP (EXCLUSIVE OF FLARES), THE LANDING, OR THE BLENDED TRANSITION.
3. 4'x4' MIN. CLEAR SPACE REQUIRED.
   a. MAX. 5% GRADE ALONG RUNNING SLOPE.
   b. CROSS SLOPE WITHIN CLEAR SPACE
      i. MAX. 2% GRADE WHEN EITHER LEG OF INTERSECTION IS STOP CONTROLLED
      ii. MAX. 5% GRADE WHEN INTERSECTION IS UNCONTROLLED OR SIGNAL CONTROLLED
4. PEDESTRIAN BUTTON (OR RELATED APPURTENANCES) SHALL BE 40" - 44" ABOVE LANDING AND A MAXIMUM OF 10" FROM THE LANDING.
5. WHEN SIDEWALK GRADE EXCEEDS 12:1 (8.33%), SIDEWALK RAMP LENGTH SHALL BE 15' MIN.

LEHI CITY

LEHI CITY STANDARD DETAIL	
ADA RAMP PLANTER STRIP (MID BLOCK)	
RD-09	DATE: *JUNE 202*

EXHIBIT B

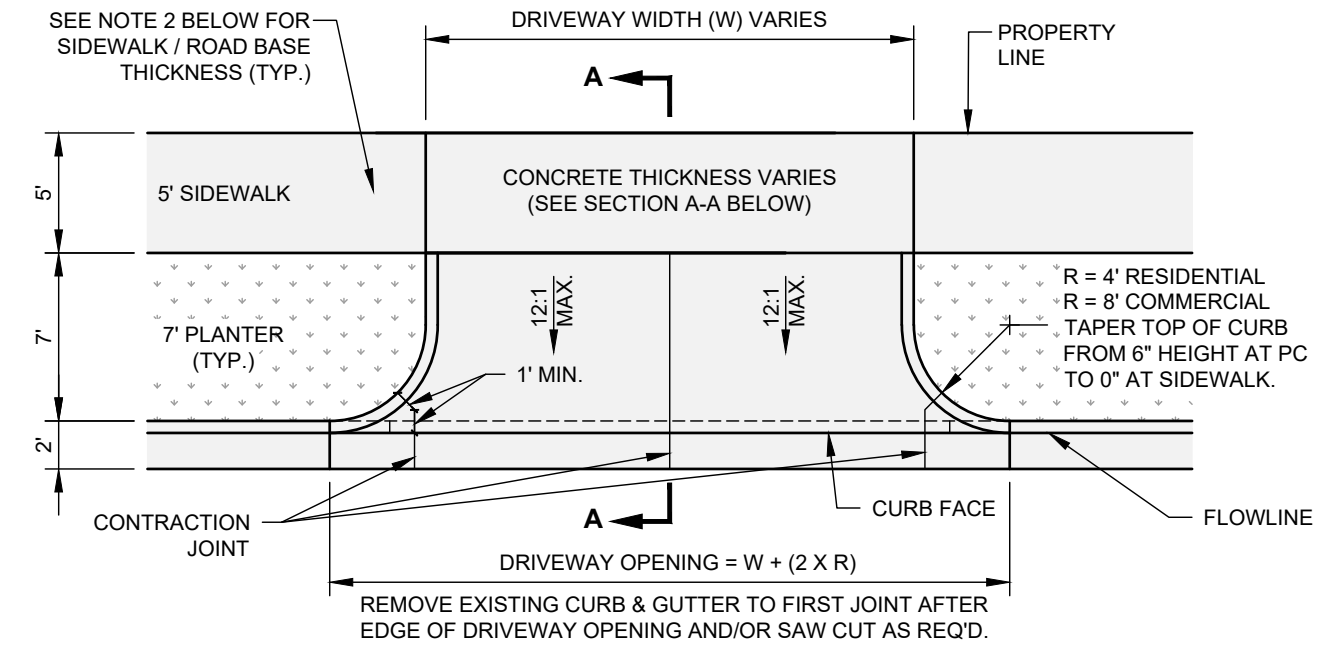

PLAN VIEW

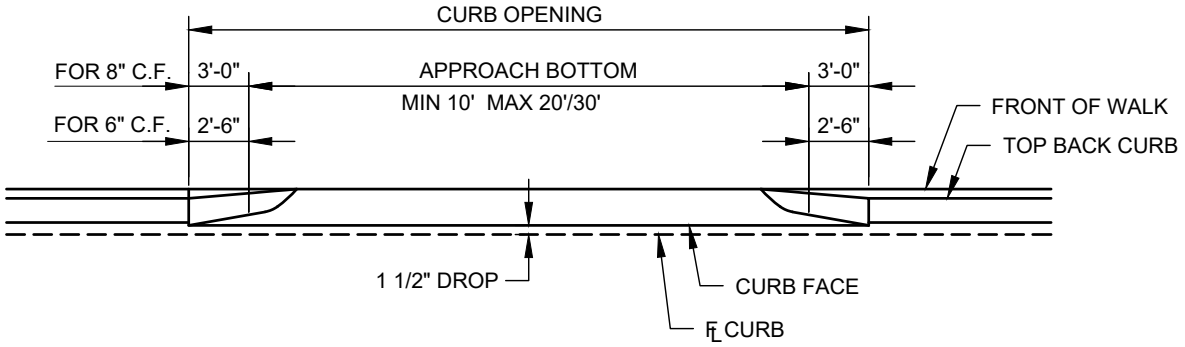

ELEVATION VIEW

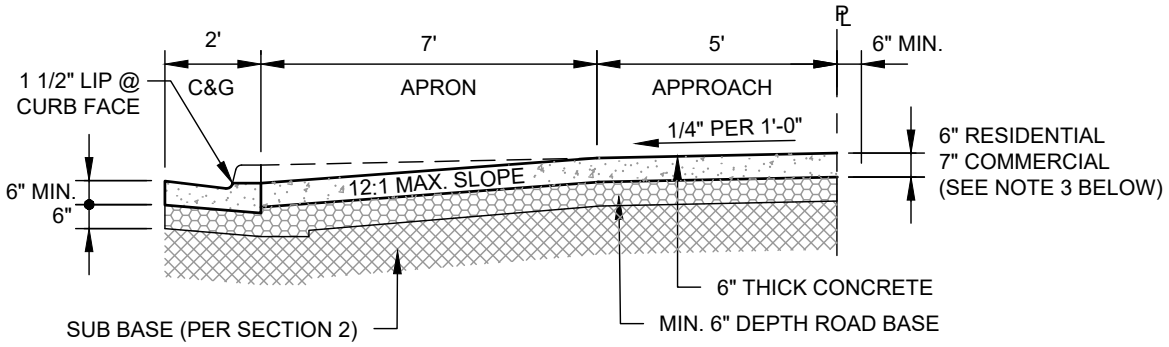

SECTION A-A

GENERAL NOTES:

1. ALL PROPOSED DRIVEWAY PLACEMENTS SHALL BE INSPECTED BY THE LEHI CITY STREET DEPARTMENT PRIOR TO POURING OF CONCRETE.
2. IN THE EVENT THAT SIDEWALKS ARE INSTALLED PRIOR TO THE INSTALLATION OF DRIVE APPROACHES, AND THEY ARE NOT CONSTRUCTED TO MEET THE STANDARDS ABOVE, ALL NON-COMPLIANT SIDEWALK SECTIONS SHALL BE REMOVED & REPLACED AS PART OF THE DRIVE APPROACH CONSTRUCTION.
3. MESH, REBAR AND/OR A THICKER CONCRETE AND ROAD BASE SECTION MAY BE REQUIRED BASED UPON ANTICIPATED TRAFFIC LOADS.

LEHI CITY

LEHI CITY STANDARD DETAIL

RADIUS DRIVE APPROACH

RD-10

DATE: JANUARY 20

EXHIBIT B

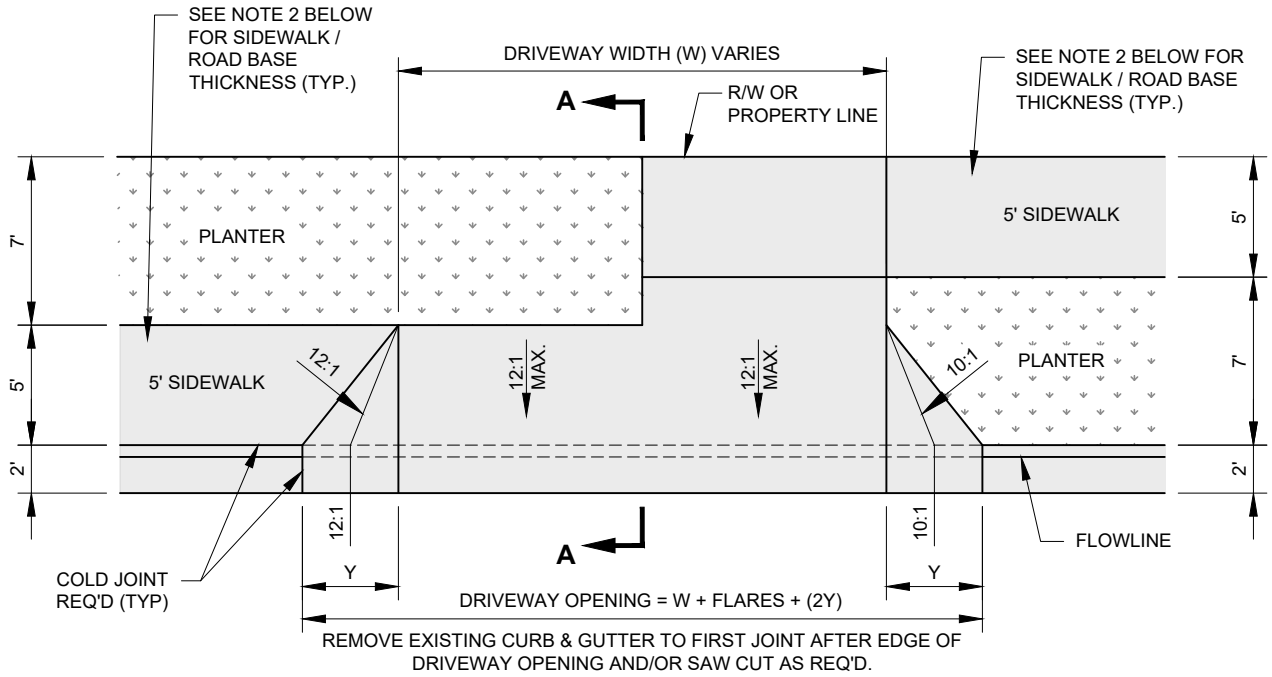

PLAN VIEW

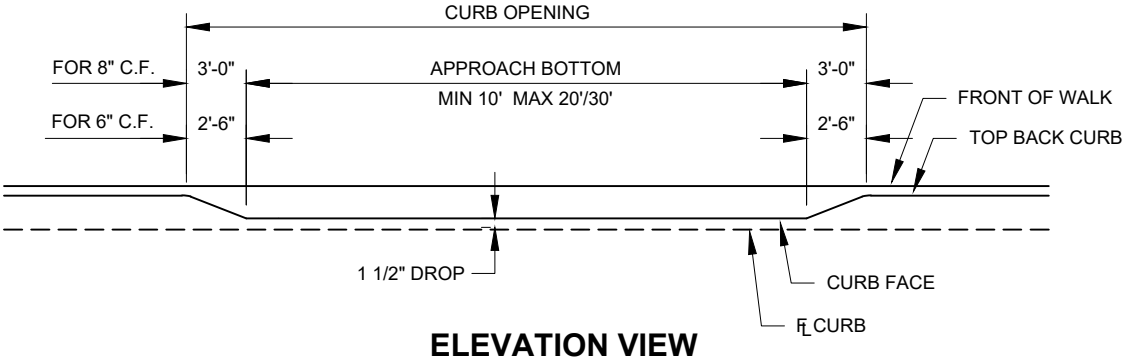

ELEVATION VIEW

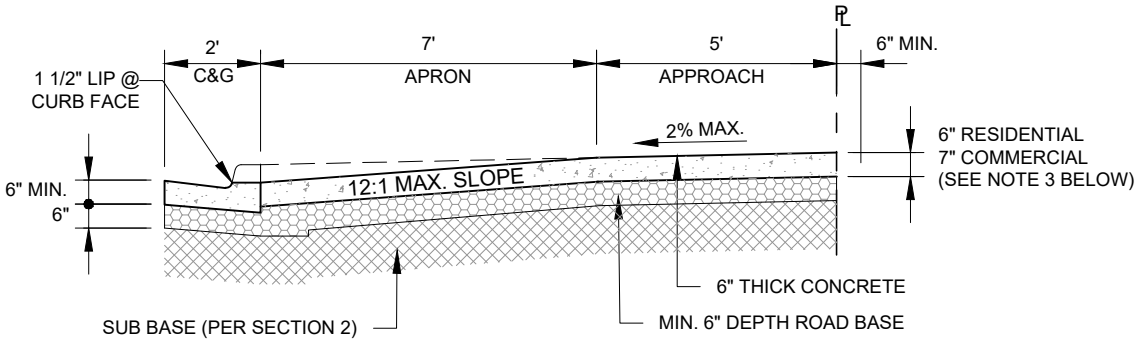

SECTION A-A

GENERAL NOTES:

1. ALL PROPOSED DRIVEWAY PLACEMENTS SHALL BE INSPECTED BY THE LEHI CITY STREET DEPARTMENT PRIOR TO POURING OF CONCRETE.
2. IN THE EVENT THAT SIDEWALKS ARE INSTALLED PRIOR TO THE INSTALLATION OF DRIVE APPROACHES, AND THEY ARE NOT CONSTRUCTED TO MEET THE STANDARDS ABOVE, ALL NON-COMPLIANT SIDEWALK SECTIONS SHALL BE REMOVED & REPLACED AS PART OF THE DRIVE APPROACH CONSTRUCTION.
3. MESH, REBAR AND/OR A THICKER CONCRETE AND ROAD BASE SECTION MAY BE REQUIRED BASED UPON ANTICIPATED TRAFFIC LOADS
4. MAX. DRIVEWAY WIDTH 20' FOR 2 CAR GARAGE, 30' FOR 3 CAR GARAGE
5. FLARED DRIVE APPROACH MAY BE ALLOWED AND/OR REQUIRED FOR PRIVATE ACCESSES WHERE ROADWAY OR PRIVATE ACCESS VOLUMES ARE LOW (SEE ACCESS MANAGEMENT STANDARDS WITHIN SECTION 2 OF THE LEHI CITY STANDARDS & PUBLIC IMPROVEMENT SPECIFICATIONS.)

LEHI CITY

LEHI CITY STANDARD DETAIL

FLARED DRIVE APPROACH

RD-11

DATE: *JUNE 202*

EXHIBIT B

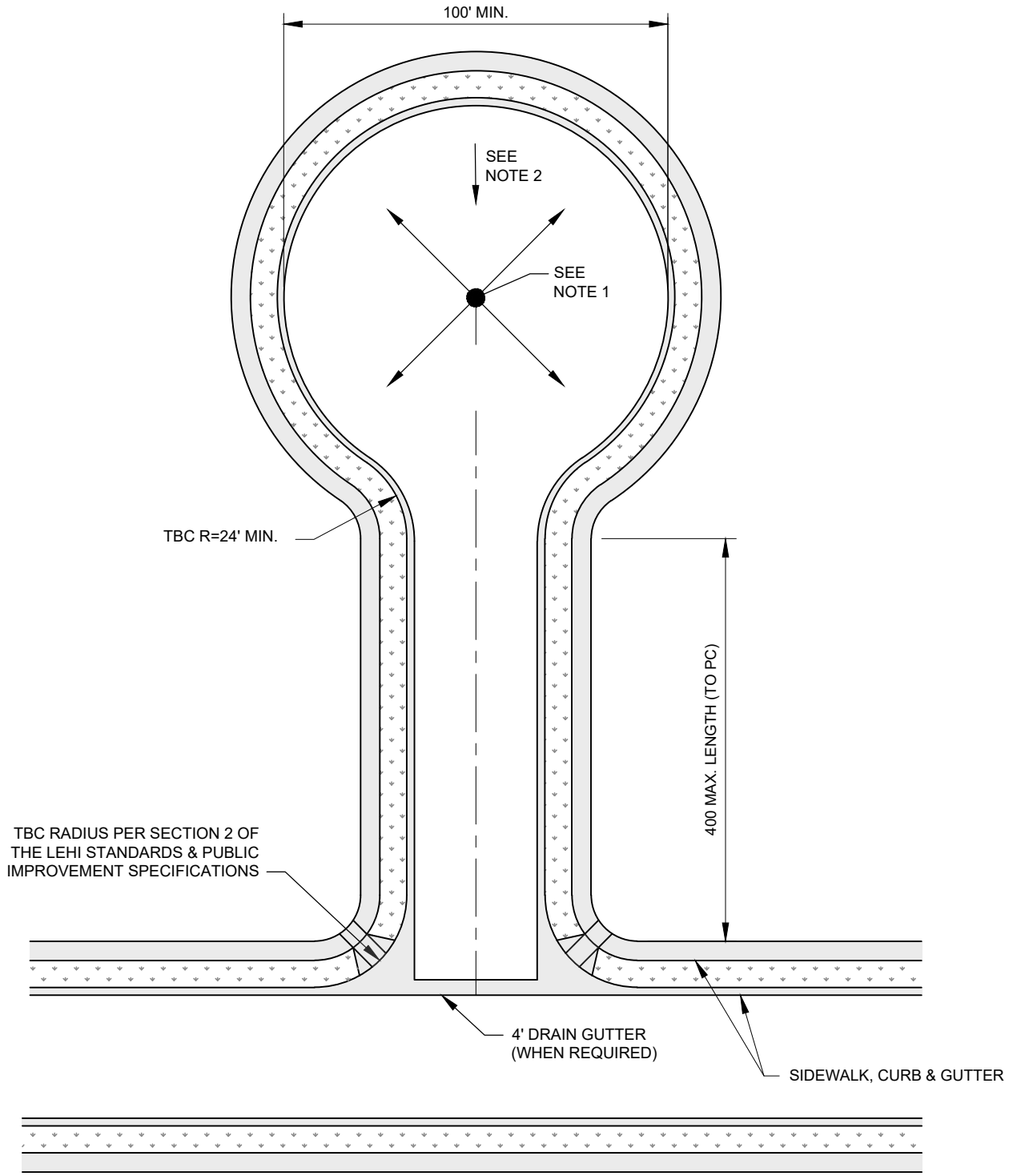

NOTES:

1. CUL-DE-SAC SHALL GRADE OUTWARD FROM RADIUS POINT TO CURB & GUTTER AT 2% MIN. SLOPE
2. ALTERNATE CUL-DE-SAC GRADING MAY BE PROPOSED FOR REVIEW & APPROVAL BY CITY ENGINEER. (MAXIMUM SLOPE 5% ACROSS THE CUL-DE-SAC).

LEHI CITY

LEHI CITY STANDARD DETAIL

CUL-DE-SAC

RD-12

DATE: *MAY 2024*

EXHIBIT B

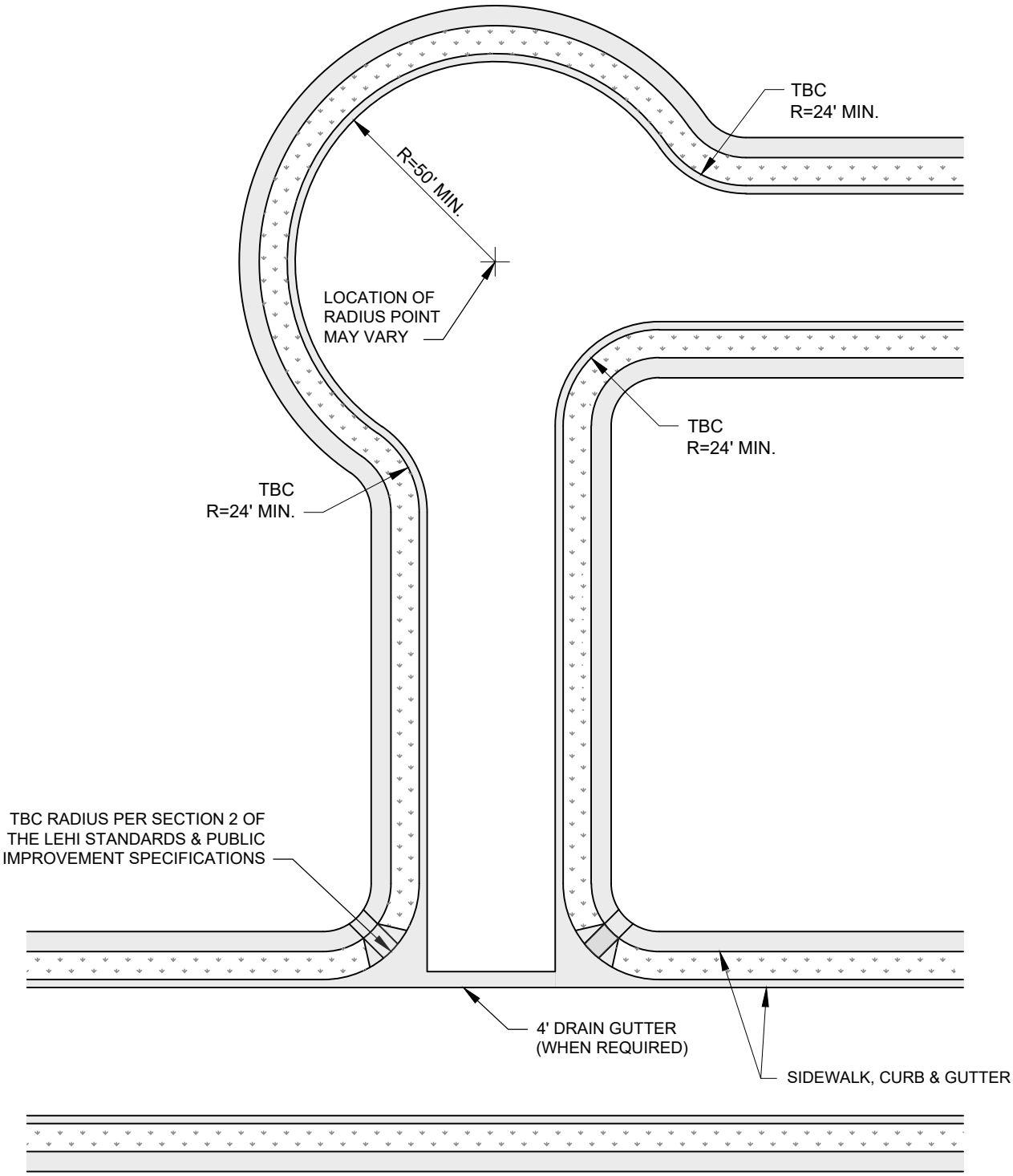

LEHI CITY

LEHI CITY STANDARD DETAIL	
KNUCKLE	
RD-13	DATE: *MAY 2024*

EXHIBIT B

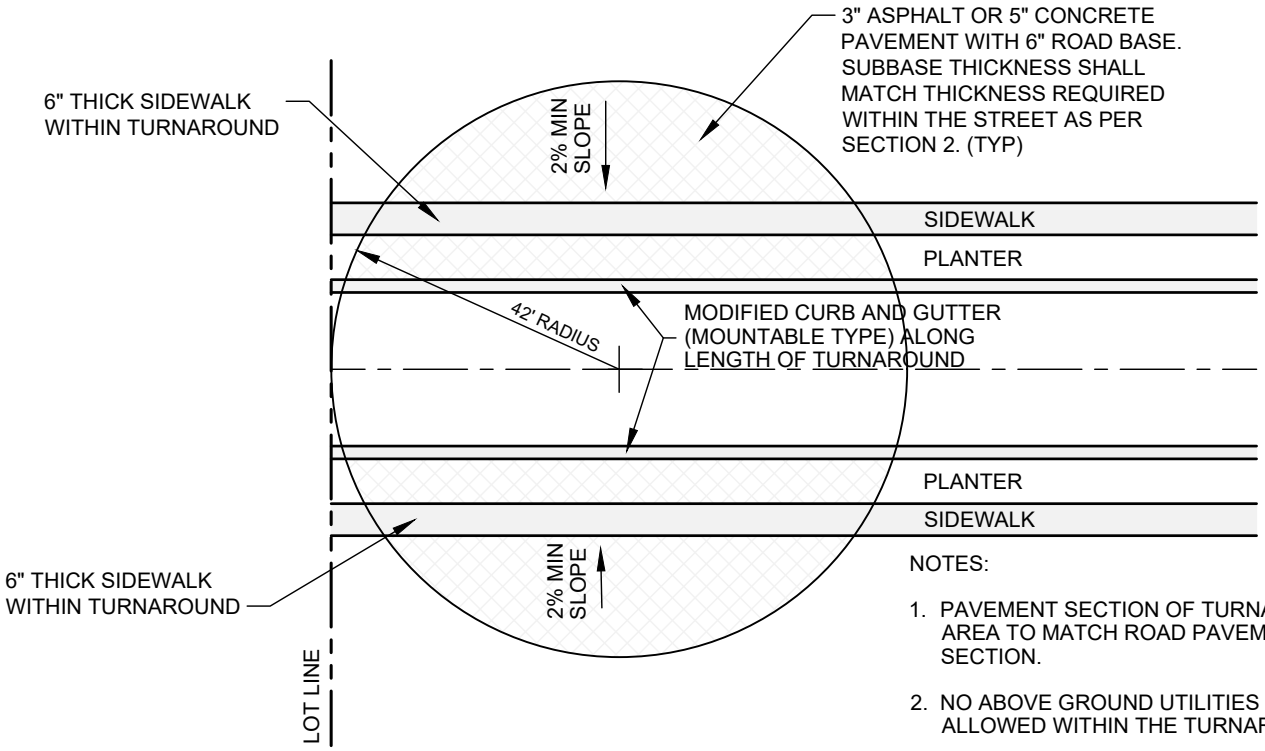

NOTES:

1. PAVEMENT SECTION OF TURNAROUND AREA TO MATCH ROAD PAVEMENT SECTION.
2. NO ABOVE GROUND UTILITIES SHALL BE ALLOWED WITHIN THE TURNAROUND.
3. A TEMPORARY EASEMENT SHALL BE PROVIDED FOR AREA OUTSIDE OF THE CITY STREET RIGHT-OF-WAY.
4. NO PARKING SIGNS REQUIRED. 3 SIGNS LOCATED AS PER FIRE MARSHAL REVIEW.

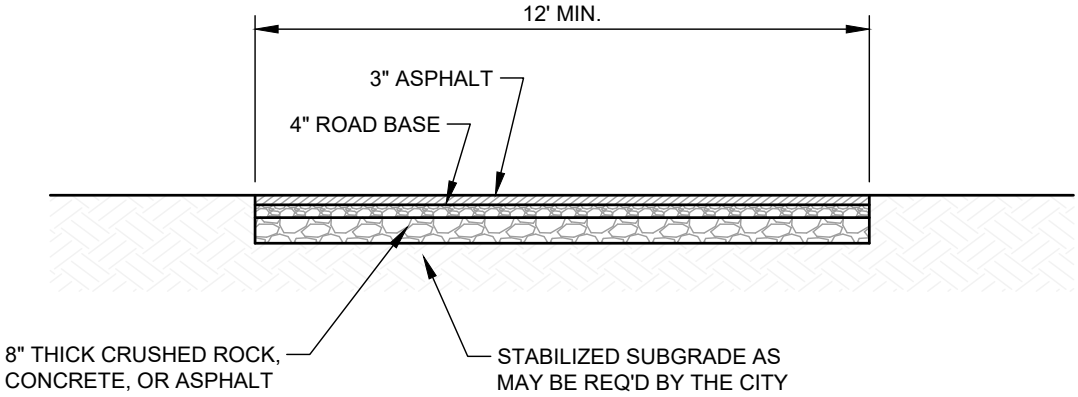

MAINTENANCE ACCESS WITH ASPHALT TRAIL ABOVE

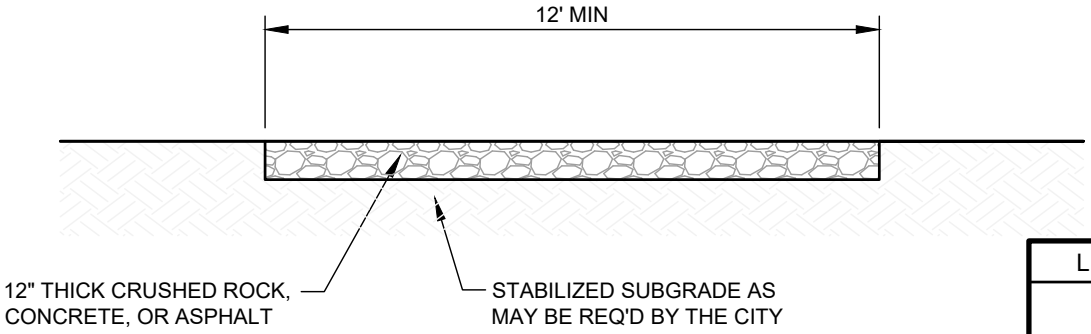

ALL WEATHER ACCESS

LEHI CITY

LEHI CITY STANDARD DETAIL

TEMPORARY TURNAROUND AND ACCESS ROADS

RD-14

DATE: *JANUARY 20*

EXHIBIT B

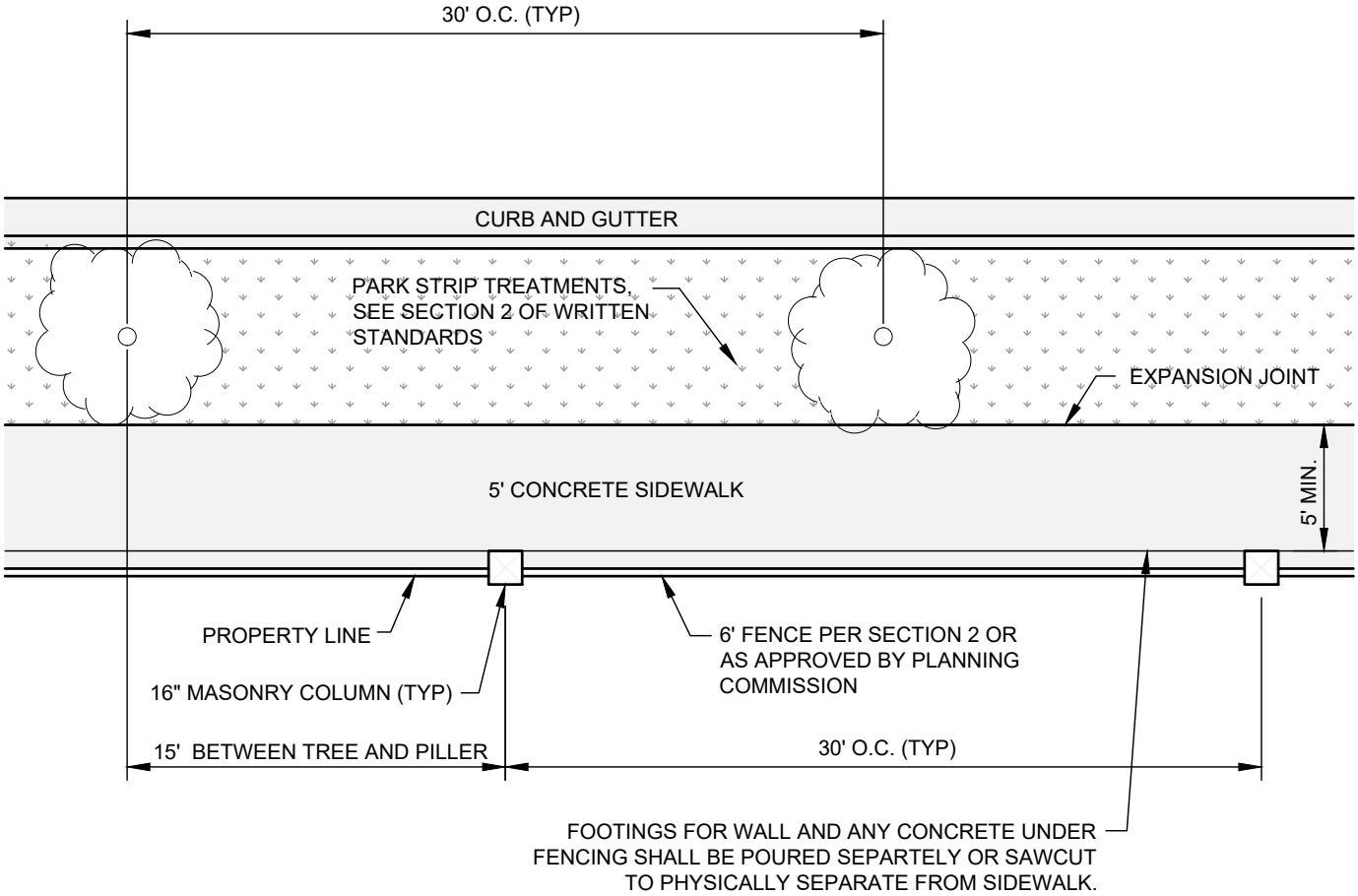

NOTES:

1. TREES IN THE PLANTER AREA SHALL BE OF A SPECIES THAT WILL NOT CAUSE ROOT DAMAGE TO CURB, GUTTER, SIDEWALK, OR ROADWAY PAVEMENT AND WILL NOT OBSTRUCT ROADWAY VISION. (TREE SPECIES TO BE APPROVED BY LEHI CITY PARKS MANAGER).
2. PROVIDE DRIP IRRIGATION SYSTEM. INSTALLATION TO BE COORDINATED BY DEVELOPER WITH LEHI CITY.
3. PROVIDE COLUMN FOOTING (30" MIN FROM GROUND SURFACE TO BOTTOM OF FOOTING)
4. TREES MAY BE CLUSTERED IN LIEU OF LINEAR SPACING.
5. IT IS STRONGLY ENCOURAGED IN THE CASE OF A SUBDIVISION WITH DOUBLE FRONTAGE LOTS THAT UP TO SIX (6) FEET OF ADDITIONAL PROPERTY IS DEDICATED AS RIGHT-OF-WAY FOR ADDITIONAL PARKWAY WIDTH. SEE SECTION 2.05 OF WRITTEN STANDARDS.

LEHI CITY

LEHI CITY STANDARD DETAIL	
FENCING & PLANTER STRIP IMPROVEMENTS ALONG LIMITED ACCESS ROADWAYS	
RD-15	DATE: *JANUARY 20*

EXHIBIT B

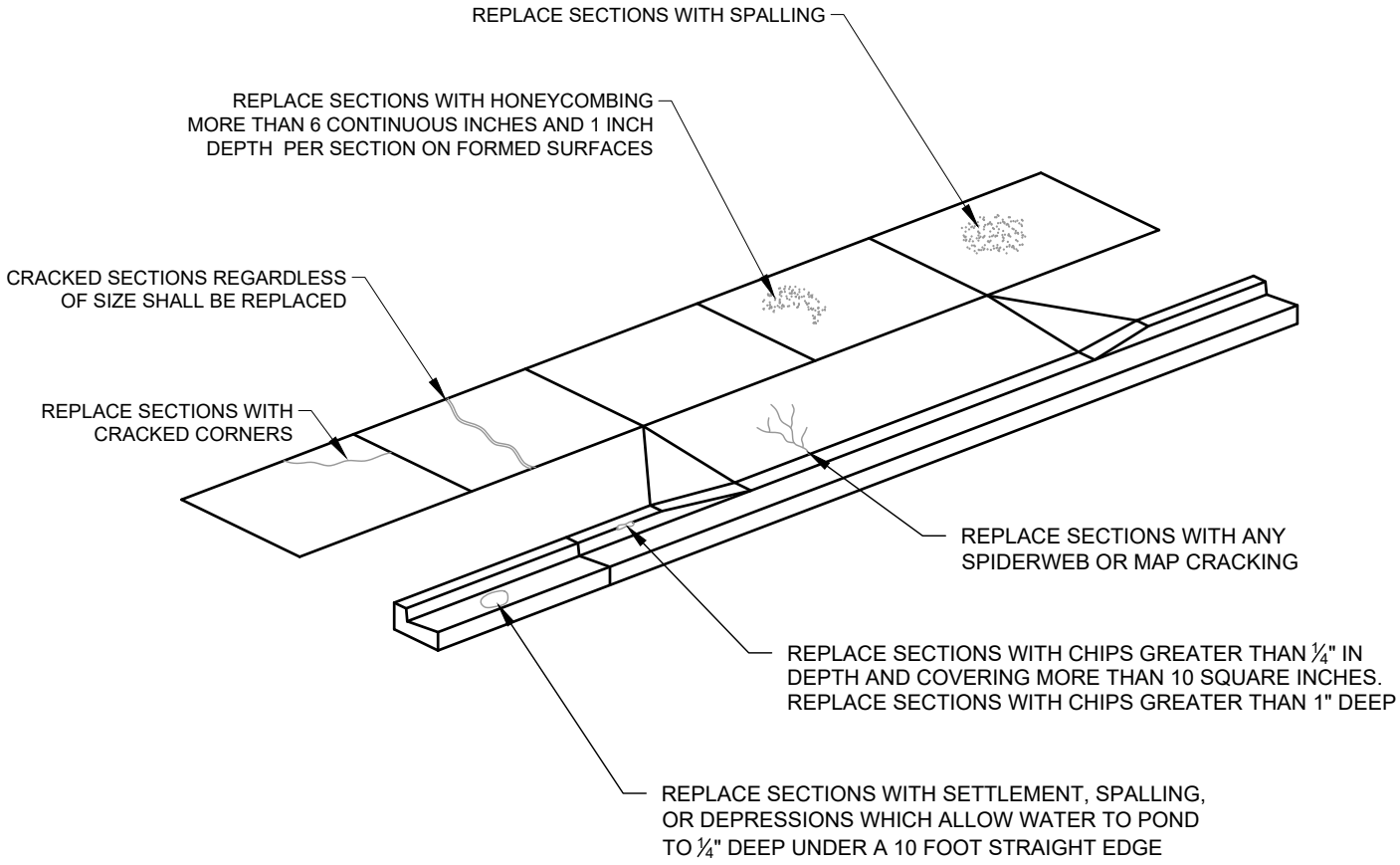

NOTES:

1. REPLACEMENT OF A COMPLETE SECTION OF SIDEWALK, CURB AND GUTTER, OR OTHER ITEM IS REQUIRED IF ONE OR MORE OF THE CONDITIONS NOTED ABOVE ARE FOUND.
2. CONDITIONS NOT SHOWN SHALL BE REPAIRED PER THE STREETS DEPARTMENT DIRECTOR RECOMMENDATIONS.
3. ALL CRACKS WITHIN SIDEWALK SECTIONS REQUIRE REPLACEMENT.
4. REPLACEMENT CONCRETE SHALL COMPLY WITH LEHI CITY DESIGN AND CONSTRUCTION STANDARDS.
5. REPLACEMENT SHALL BE DONE IN COMPLETE SECTIONS. NO PATCHING.

LEHI CITY

LEHI CITY STANDARD DETAIL

CONCRETE REPLACEMENT CRITERIA

RD-16

DATE: *JANUARY 20*

EXHIBIT B

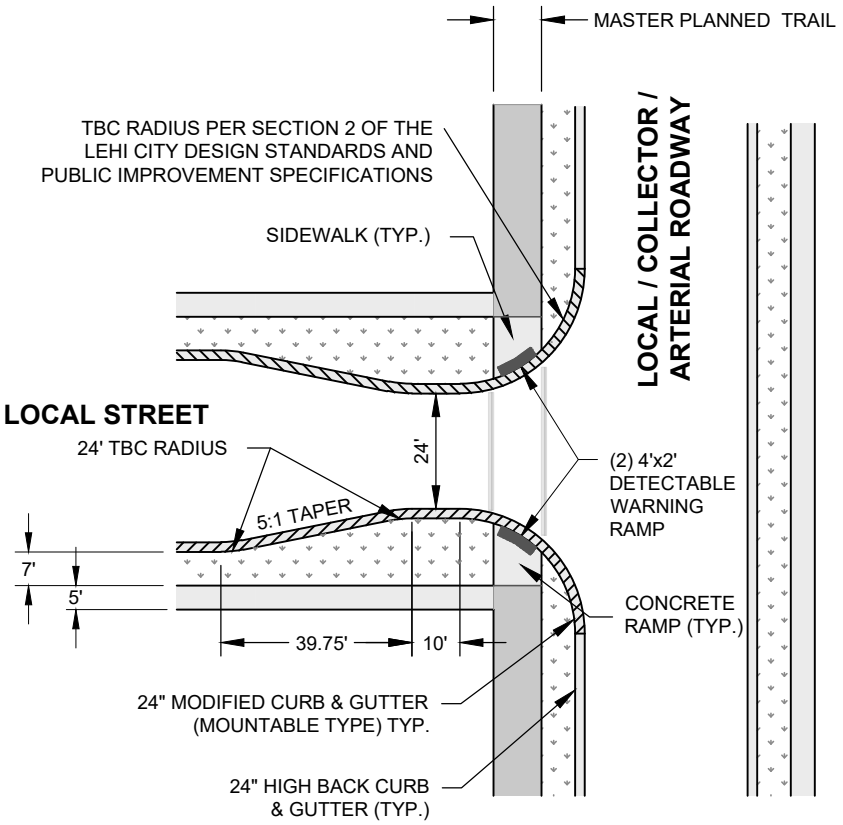

INTERSECTION TRAIL CROSSING

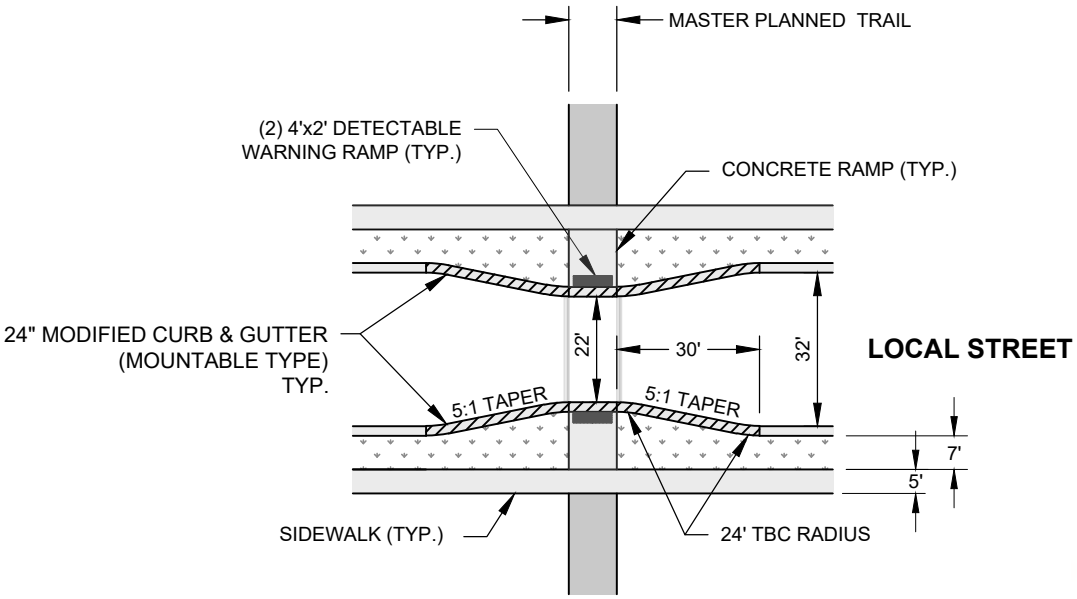

MID-BLOCK TRAIL CROSSING

LEHI CITY

LEHI CITY STANDARD DETAIL

MASTER PLANNED TRAIL CROSSING AT LOCAL STREET

RD-17

DATE: *MAY 2024*

GENERAL NOTES:

1. DETECTABLE WARNING SURFACES SHALL BE PLACED WITHIN CONCRETE AND EXTEND 24 INCHES MINIMUM IN THE DIRECTION OF TRAVEL AND THE FULL WIDTH OF THE CURB RAMP (EXCLUSIVE OF FLARES), THE LANDING, OR THE BLENDED TRANSITION.

EXHIBIT B

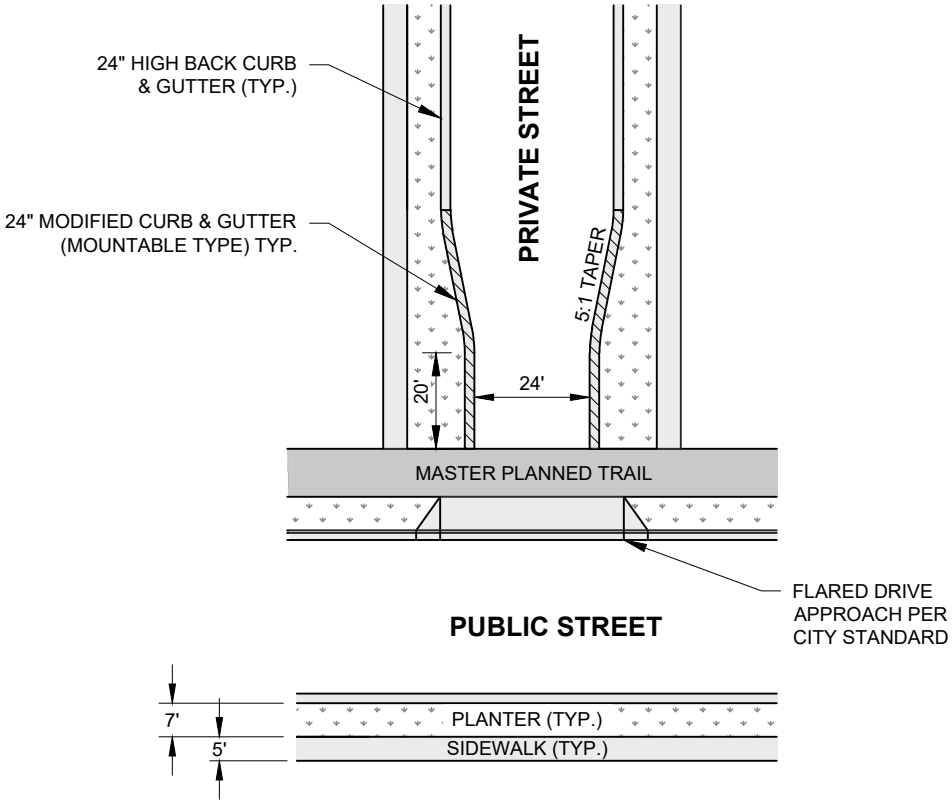

GENERAL NOTES:

1. THE USE OF THIS CROSS SECTION IS SUBJECT TO THE APPROVAL OF THE CITY ENGINEER.

LEHI CITY

LEHI CITY STANDARD DETAIL

CONTINUOUS TRAIL CROSSING (PRIVATE STREETS ONLY)

RD-18

DATE: *MAY 2024*

EXHIBIT B

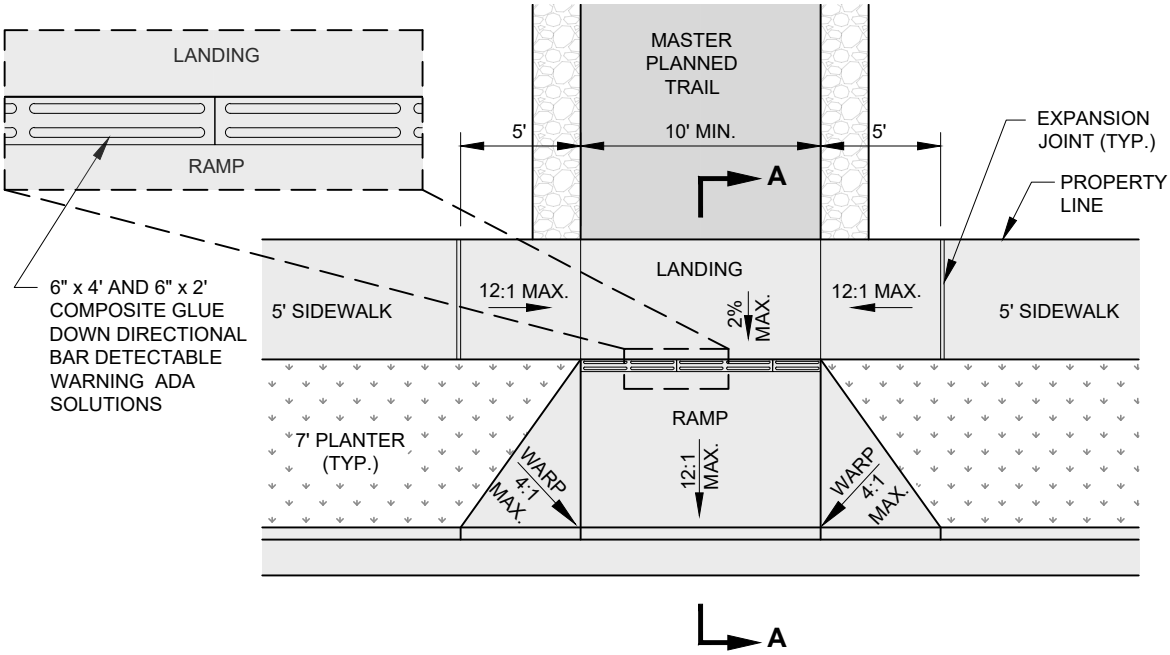

PLAN VIEW

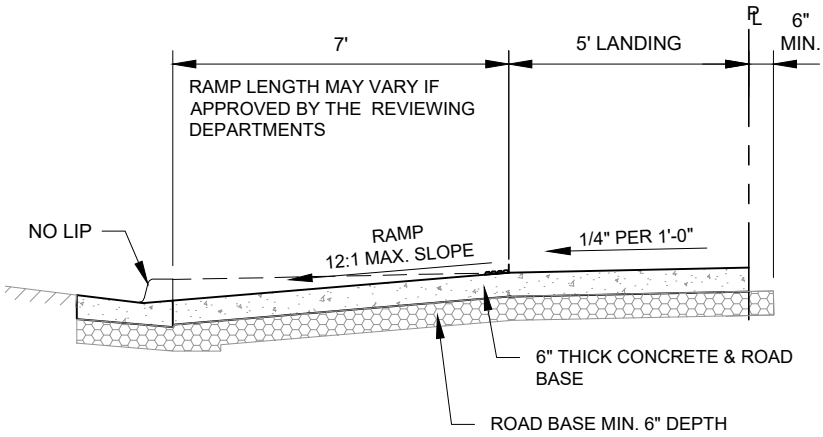

SECTION A-A

GENERAL NOTES:

1. ROAD/FIELD GRADES MAY REQUIRE ADJUSTMENT AS PER APPROVAL BY PUBLIC WORKS DEPARTMENT
2. DETECTABLE WARNING SURFACES SHALL BE PLACED IN CONCRETE AND EXTEND THE FULL WIDTH OF THE RAMP (EXCLUSIVE OF FLARES, THE LANDING, OR THE BLENDED TRANSITION.)
3. PUBLIC WORKS DEPARTMENT MUST APPROVE TYPES AND COLOR OF DETECTABLE WARNING DEVICES USED.

LEHI CITY

LEHI CITY STANDARD DETAIL	
TRAIL RAMP (BIKE-TO-STREET ACCESS ONLY)	
RD-19	DATE: *MAY 2024*

EXHIBIT B

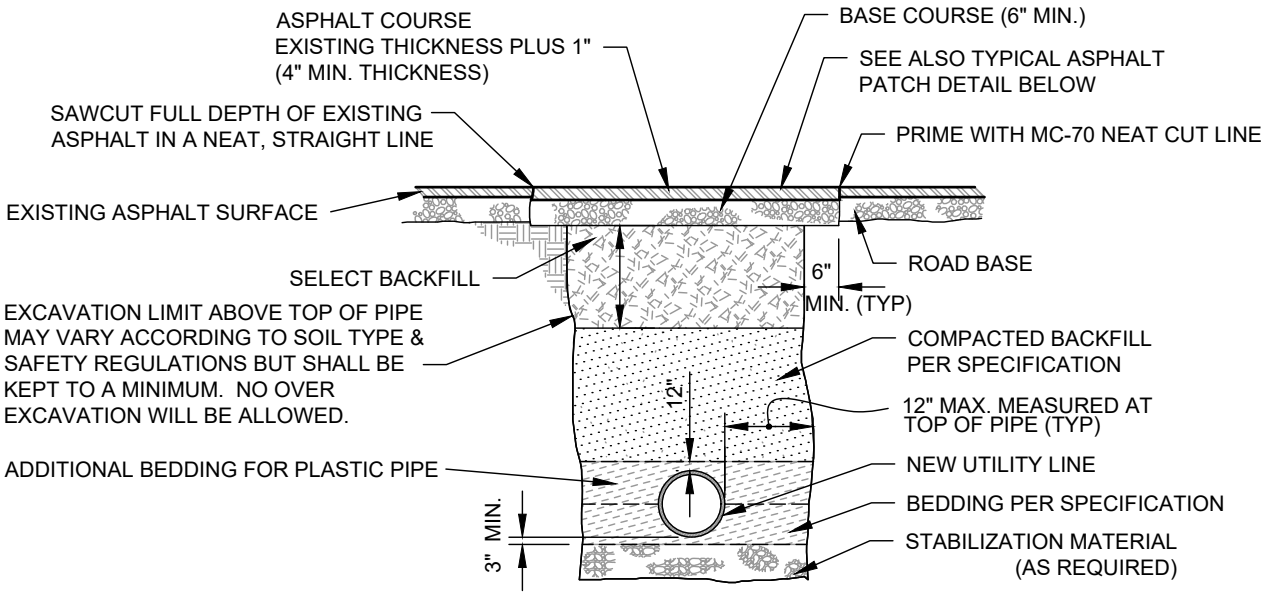

UTILITY INSTALLATION AND ROAD REPAIR

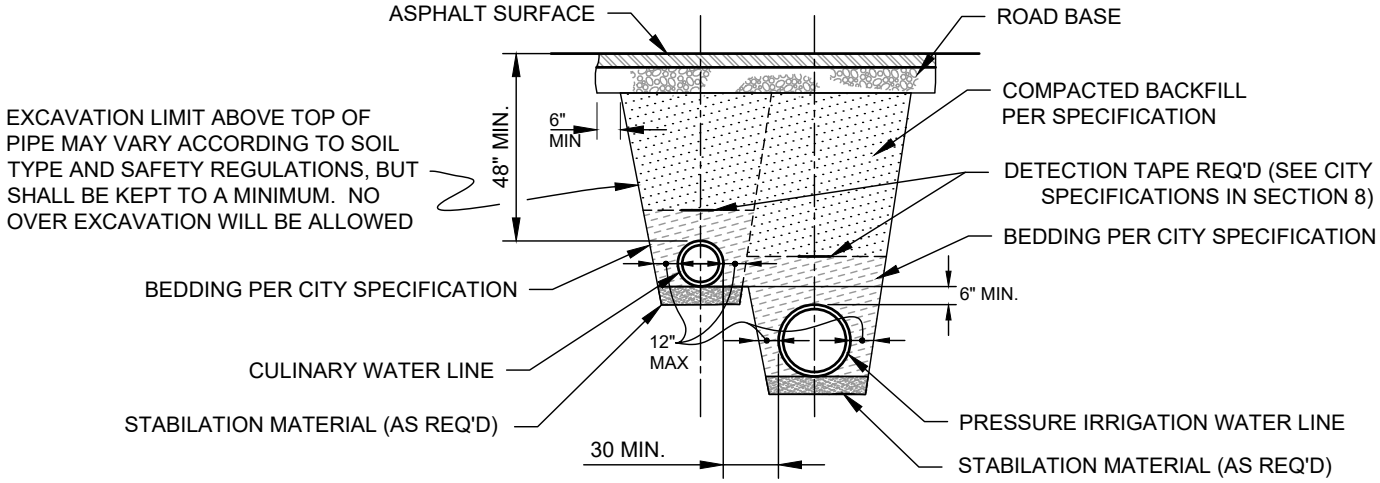

TYPICAL DUAL PIPE INSTALLATION

(IRR. AND CUL)

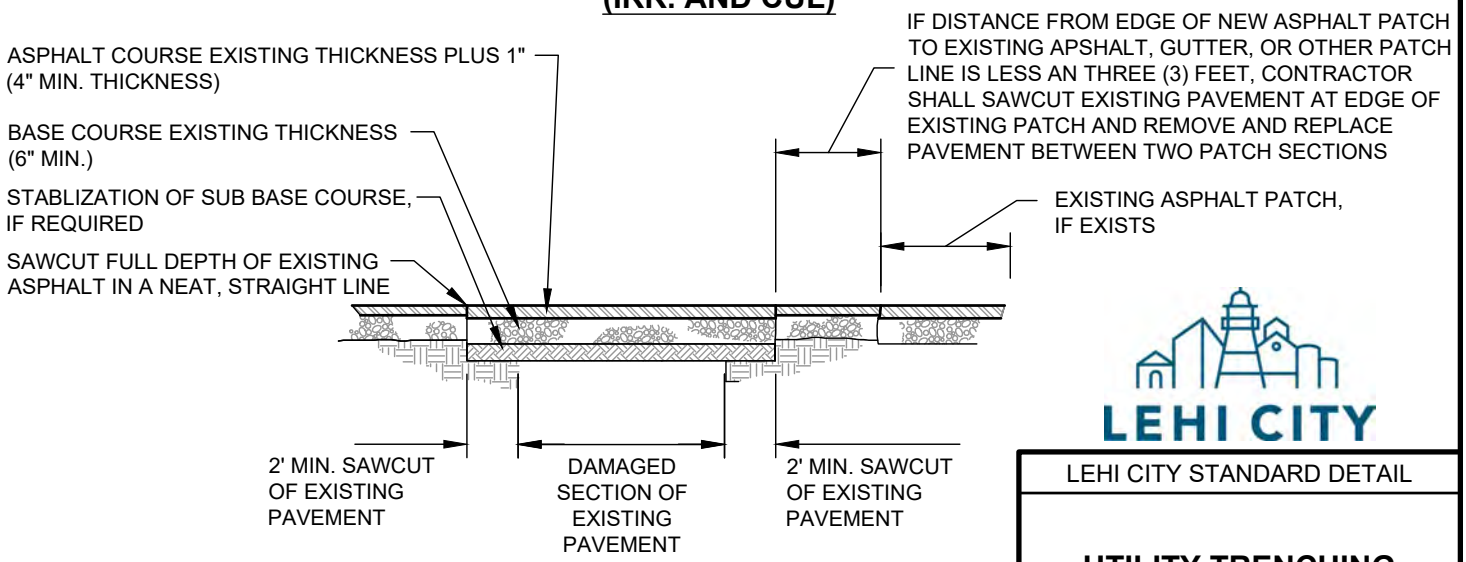

TYPICAL ASPHALT PATCH DETAIL

LEHI CITY

LEHI CITY STANDARD DETAIL	
UTILITY TRENCHING	
WT-01	DATE: *JANUARY 20*

EXHIBIT B

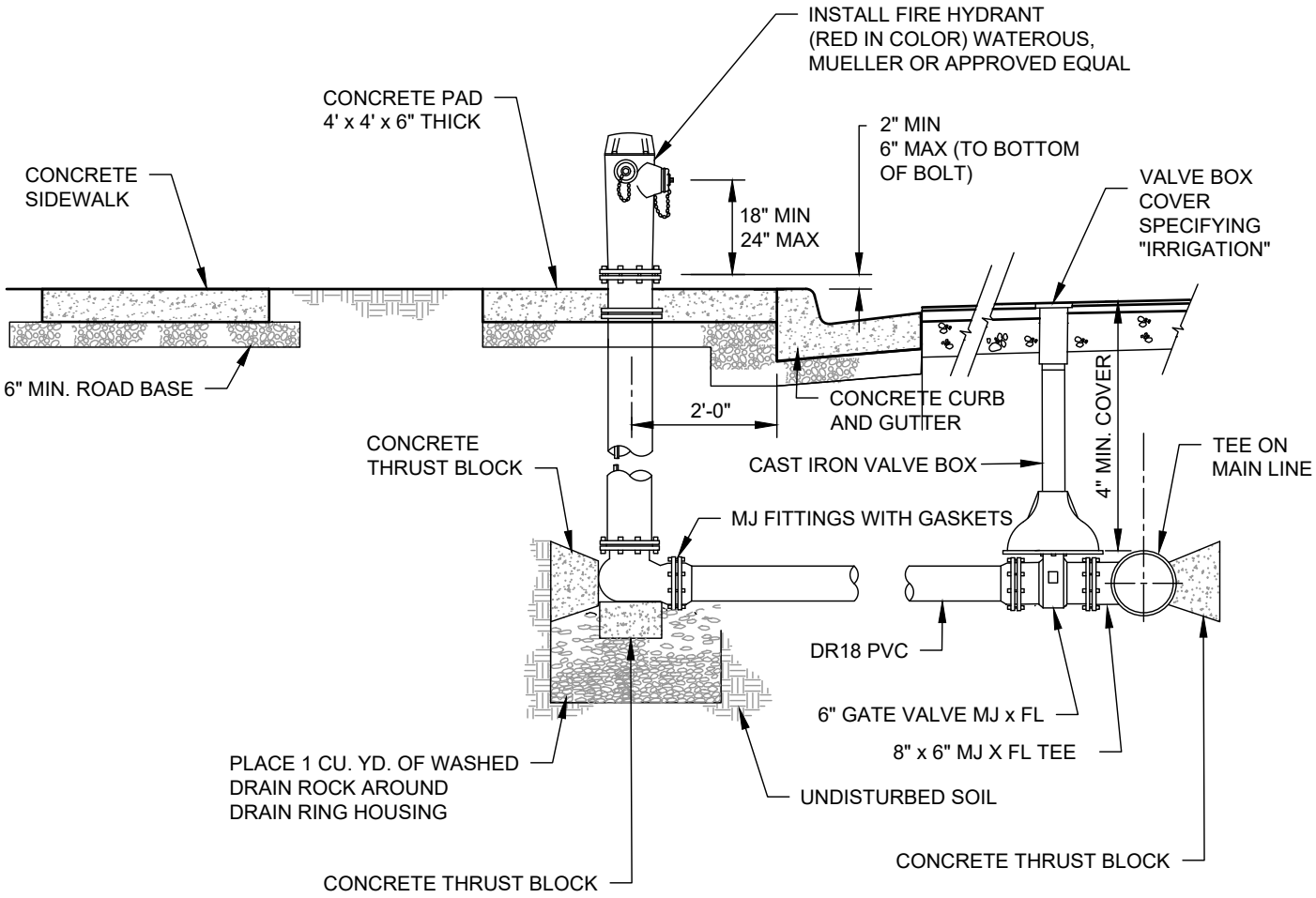

FIRE HYDRANT WITH VALVE

NOTES:

1. ALL BOLTS SHALL BE FREE FROM CONCRETE AND FULLY ACCESSIBLE.
2. HYDRANT SHALL BE INSTALLED 2' BEHIND THE WALK WITH CONCRETE PAD WHEN THERE IS NO PLANTER.
3. WHEN INSTALLING CONCRETE PAD AROUND FIRE HYDRANT, CONTRACTOR SHALL PLACE CRACK CONTROL JOINTS DIAGONALLY FROM THE HYDRANT TO THE CORNERS OF SAID PAD.
4. A THREE (3) FOOT HORIZONTAL CLEARANCE MUST BE MAINTAINED AROUND THE OUTSIDE OF ALL FIRE HYDRANTS.
5. STEAMER OUTLET SHALL FACE THE ROAD.

LEHI CITY

LEHI CITY STANDARD DETAIL	
FIRE HYDRANT	
WT-02	DATE: JANUARY 20[illegible]

EXHIBIT B

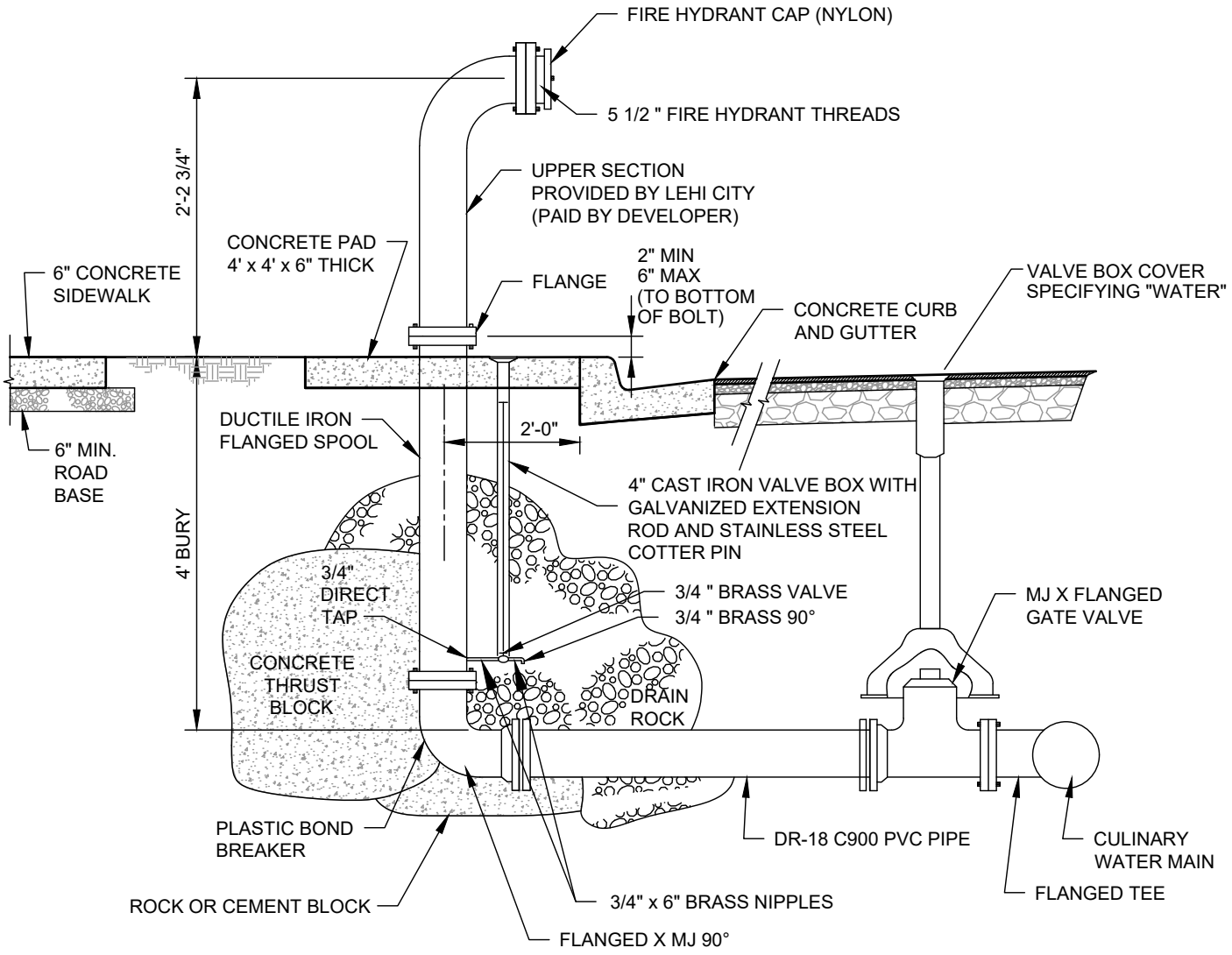

NOTE:

1. 4" SIZE FOR 8" OR SMALLER LINES 6" SIZE FOR 10" OR LARGER LINES OTHER SIZES AS DIRECTED BY THE WATER DEPARTMENT DIRECTOR.
2. BLOWOFF SHALL BE INSTALLED 2' BEHIND THE WALK WITH CONCRETE PAD WHEN THERE IS NO PLANTER.
3. WHEN INSTALLING CONCRETE PAD AROUND BLOW-OFF, CONTRACTOR SHALL PLACE CRACK CONTROL JOINTS DIAGONALLY FROM THE BLOW-OFF TO THE CORNERS OF SAID PAD.
4. A THREE (3) FOOT HORIZONTAL CLEARANCE MUST BE MAINTAINED AROUND THE OUTSIDE OF ALL BLOW-OFFS.
5. BLOWOFF TOP, ADAPTOR, AND CAP TO BE SUPPLIED BY LEHI CITY WATER DEPARTMENT.

LEHI CITY

LEHI CITY STANDARD DETAIL	
BLOW-OFF	
WT-03	DATE: *JANUARY 20*

EXHIBIT B

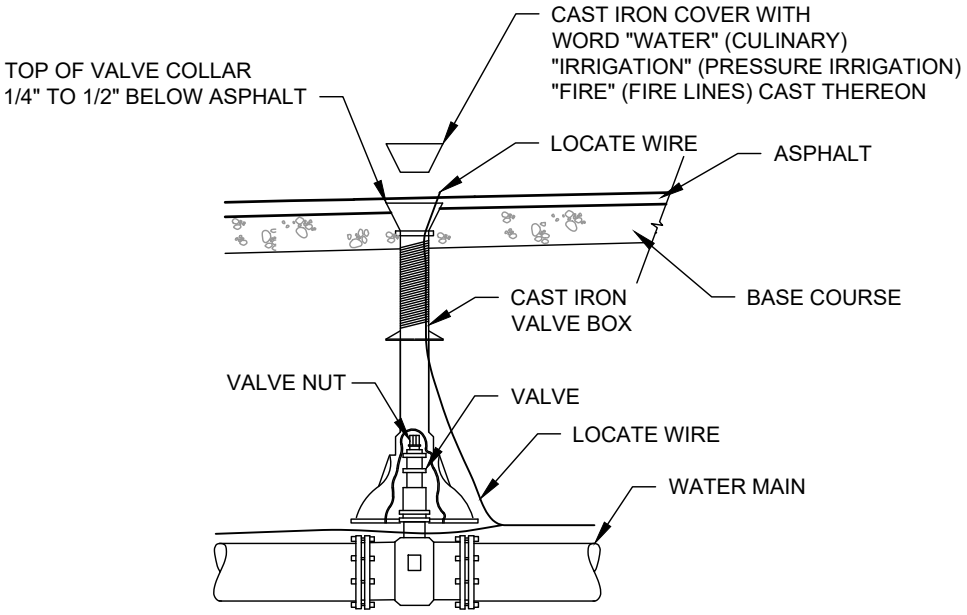

NOTES:

1. TOP OF VALVE COLLAR SHALL BE SET TO FINAL GRADE PRIOR TO PAVING. CONCRETE COLLARS MAY BE ALLOWED ONLY AFTER PRIOR APPROVAL OF LEHI CITY STREET DEPARTMENT. IF APPROVED, VALVE COLLARS SHALL BE 12" MIN. WIDE (FROM EDGE OF COLLAR), 12" THICK AND 1/4" TO 1/2" BELOW ASPHALT.

2. IN NON PAVED AND PLANTER STRIP AREAS, A 4' x 4' x 6" THICK CONCRETE PAD MUST BE PROVIDED FLUSH WITH THE TOP OF THE VALVE BOX.

LEHI CITY

LEHI CITY STANDARD DETAIL

VALVE BOX

WT-04

DATE:
JANUARY 20

EXHIBIT B

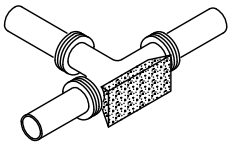

THRUST BLOCK TYPICAL

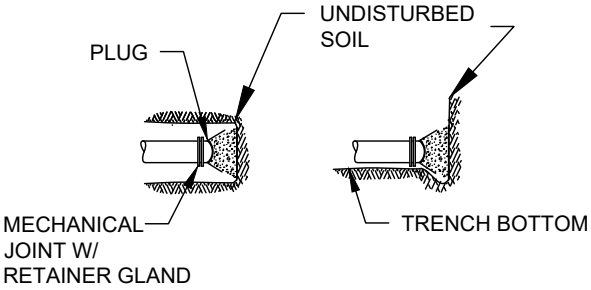

PLAN **ELEVATION**

PLUG DETAIL

SIZE	BENDS				TEES *	GATE VALVES	DEAD ENDS	CROSS W/ 1 BRANCH PLUGGED	CROSS W/ 2 BRANCH PLUGGED
	30°	45°	22 1/2°	11 1/4°					
3	1.0	0.6	0.3	0	0.7	0.5	0.7	0.7	0.7
4	1.8	1.0	0.5	0	1.3	0.5	1.3	1.3	1.3
6	4.0	2.2	1.1	0	2.8	0.7	2.8	2.8	2.8
8	7.1	3.8	2.0	1.0	5.0	2.4	5.0	5.0	5.0
10	11.1	6.0	3.0	1.5	7.8	4.5	7.8	7.8	7.8
12	16.0	8.6	4.4	2.2	11.3	7.3	11.3	11.3	11.3
14	21.7	11.8	6.0	3.0	15.4	11.0	15.4	15.4	15.4
15	25.0	13.5	7.0	3.5	17.6	SPECIAL DESIGN	17.6	17.6	17.6
16	28.4	15.3	8.0	4.0	20.0		20.0	20.0	20.0
18	36.0	19.4	10.0	5.0	25.4		25.4	25.4	25.4
20	44.2	24.0	12.2	6.1	31.4		31.4	31.4	31.4
21	49.0	26.5	13.5	6.8	34.6		34.6	34.6	34.6
22	54.0	29.0	14.8	7.4	38.0		38.0	38.0	38.0
24	64.0	34.5	17.7	8.8	45.0		45.0	45.0	45.0
30	100.0	54.0	27.6	13.8	71.0		71.0	71.0	71.0
36	144.0	78.0	40.0	20	102.0		102.0	102.0	102.0

* SIZE IS BRANCH SIZE

AREAS GIVEN IN TABLE ARE BASED UPON AN INTERNAL STATIC PRESSURE OF 100 P.S.I. AND A SOIL BEARING CAPACITY OF 1000 LBS. PER SQ. FT. BEARING AREAS FOR ANY PRESSURE AND SOIL BEARING CAPACITY MAY BE OBTAINED BY MULTIPLYING THE TABULATED VALUES BY A CORRECTION FACTOR "F".

$$F = \frac{\text{ACTUAL SPECIFIED TEST PRESSURE IN HUNDREDS OF LBS/SQ. IN.}}{\text{ACTUAL SOIL BEARING CAPACITY IN THOUSANDS OF LBS.}}$$

TABLE OF BEARING AREAS IN SQ. FT. FOR CONCRETE THRUST BLOCKING

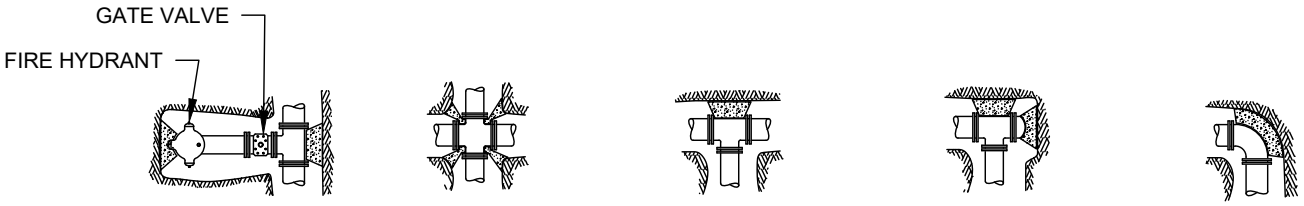

FIRE HYDRANT **CROSS** **TEE** **TEE (PLUGGED)** **ELBOW**

FOR 100 P.S.I. INTERNAL STATIC PRESSURE AND 1000 LBS. PER SQ. FT. SOIL BEARING CAPACITY.

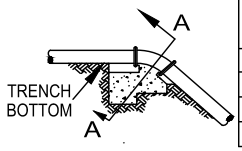

TOP OF VERT. BEND

BAR SIZES FOR 100 PSI		MIN. LENGTH OF EMBED-MENT
LESS THAN	NO. OF BARS & SIZE	
60 CF	NO. 4	8"
90 CF	NO. 5	12"
133 CF	NO. 6	16"

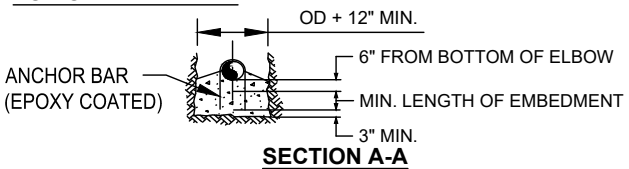

SECTION A-A

SIZE	BENDS		
	45°	22 1/2°	11 1/2°
3	3.7	1.9	1.4
4	6.5	3.3	1.7
6	14.6	7.5	3.7
8	26.0	13.2	6.6
10	40.5	20.7	10.3
12	58.5	30.0	14.8
14	79.5	40.7	20.2
15	91.0	46.6	23.2
16	104.0	53.0	26.5
18	SPECIAL DESIGN REQUIRED	67.3	33.4
20		83.0	41.0
21			45.5
22			50.0
24			59.5
30			
36			

REQ'D FOR VERT. BEND ANCHOR BLOCKS FOR 100 P.S.I. PRESSURE ADJUST VOLUMES BY MULTIPLYING TABULATED VALUES BY A CORRECTION FACTOR "F".

$$F = \frac{\text{ACTUAL SPECIFIED TEST PRESSURE}}{100}$$

TABLE OF VOLUMES OF CONCRETE (IN CU. FT.)

NOTES:

1. ALL FITTINGS SHALL BE COVERED WITH PLASTIC OR OTHER APPROVED MATERIAL PRIOR TO POURING THE THRUST BLOCK
2. FM GRADE GREASE SHALL BE USED FOR ALL BOLTED FITTINGS.
3. ALL TRUST BLOCKS AGAINST NON-NATIVE MATERIALS SHALL BE UPSIZED UNLESS A BEARING PRESSURE OF 1000 LBS. PER SQ.FT. IS PROVIDED.
4. POST MIX OR SAC-CRETE IS NOT ALLOWED FOR THRUST BLOCKS.

LEHI CITY

LEHI CITY STANDARD DETAIL

THRUST BLOCKING

WT-05

DATE: JANUARY 20

EXHIBIT B

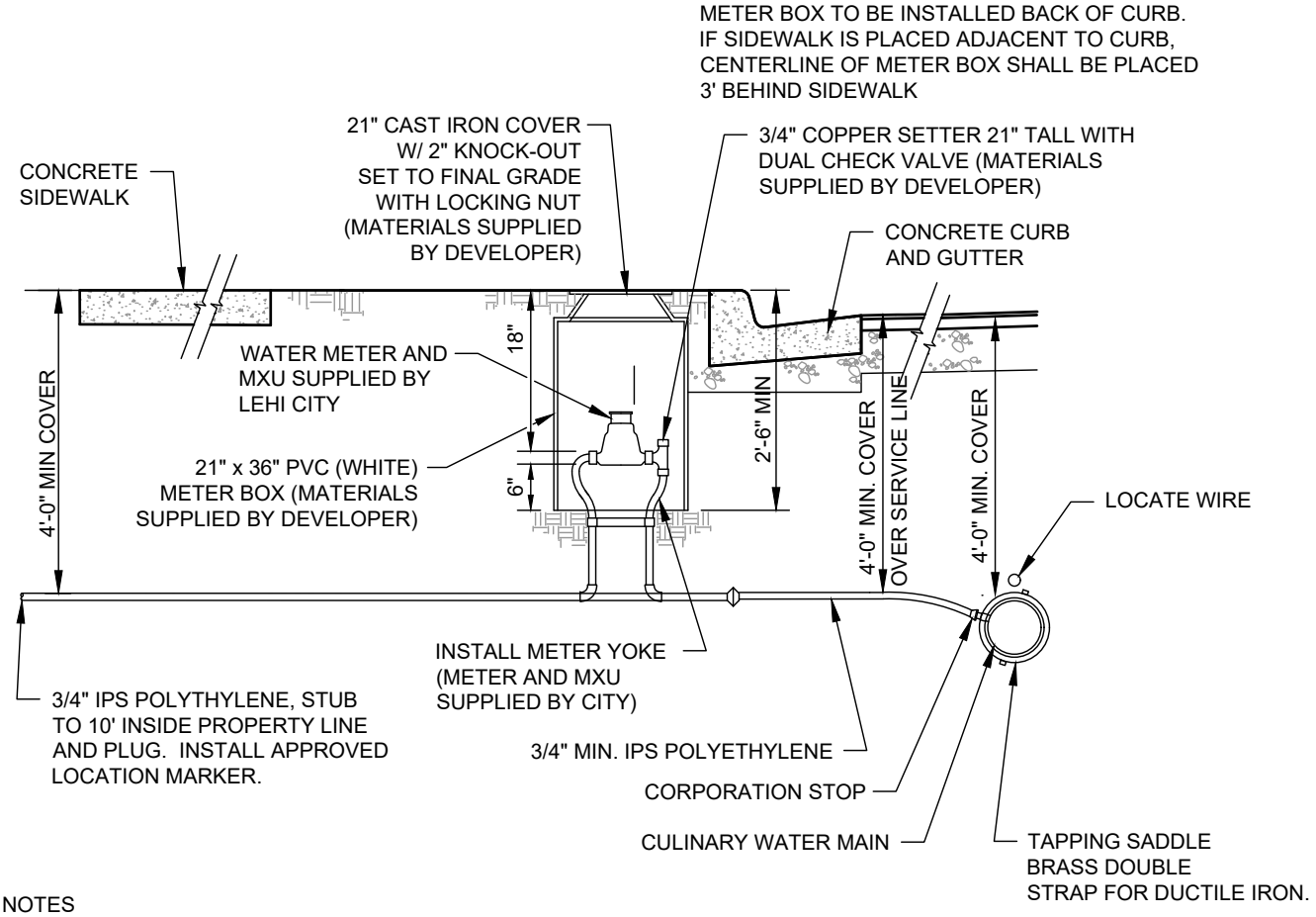

GENERAL NOTES

1. 10'-0" EDGE TO EDGE HORIZONTAL CLEARANCE IS REQUIRED BETWEEN WATER AND SEWER LATERAL SERVICE LINES.

2. WHERE WATER AND SEWER LATERALS MUST CROSS, WATER LATERAL SHALL BE 18" ABOVE THE SEWER LATERAL AS MEASURED FROM THE BOTTOM OF THE WATER LATERAL TO THE TOP OF THE SEWER LATERAL. THIS SEPARATION SHALL BE MAINTAINED FOR A MINIMUM OF 10'-0" EITHER SIDE OF THE CROSSING POINT.

3. ALL CULINARY WATER METERS SHALL BE CONSTRUCTED BEHIND PROPOSED CURB AND GUTTER, AND SHALL BE SERVICEABLE FROM THE STREET, REGARDLESS OF WHETHER OR NOT THE TYPICAL STREET CROSS SECTION CONTAINS A PLANTER STRIP.

4. COORDINATE PLACEMENT OF WATER METER WITH LEHI WATER DEPARTMENT.

5. TEFLON TAPE REQUIRED ON ALL THREADED CONNECTIONS.

6. CULINARY WATER METERS SHALL NOT BE PLACED WITHIN DRIVABLE AREAS UNLESS OTHERWISE APPROVED BY WATER DEPARTMENT.

7. ALL PIPING, FITTINGS, ECT WILL BE PROVIDED BY DEVELOPER AND INSPECTED BY LEHI CITY WATER INSPECTOR.

8. METER AND MXU WILL BE SUPPLIED BY LEHI CITY.

9. ALL BRASS FITTINGS, VALVES, ETC. SHALL BE MANUFACTURED IN ACCORDANCE WITH AWWA STANDARD C-800, LATEST REVISION. ALL BRASS PRODUCTS ARE TO BE CERTIFIED TO THE REQUIREMENTS OF NSF / ANSI 61 ANNEX F&G AND NSF / ANSI 372.

10. HOMES WITH FIRE SPRINKLERS REQUIRE A 1" OR LARGER WATER SERVICE AS REQUIRED BY FIRE SPRINKLER DESIGN.

11. NO SPLICES OR FITTINGS ALLOWED BETWEEN THE CORPORATION STOP AND THE METER SETTER.

12. METERS THAT FALL WITHIN DRIVEWAYS MAY BE RELOCATED A MAXIMUM OF 3' LATERALLY, OTHERWISE THE SERVICE MUST BE TERMINATED AT THE MAIN AND REINSTALLED OUTSIDE OF THE DRIVEWAY.

LEHI CITY

LEHI CITY STANDARD DETAIL

CULINARY SERVICE CONNECTION

WT-06

DATE: *JANUARY 20*

EXHIBIT B

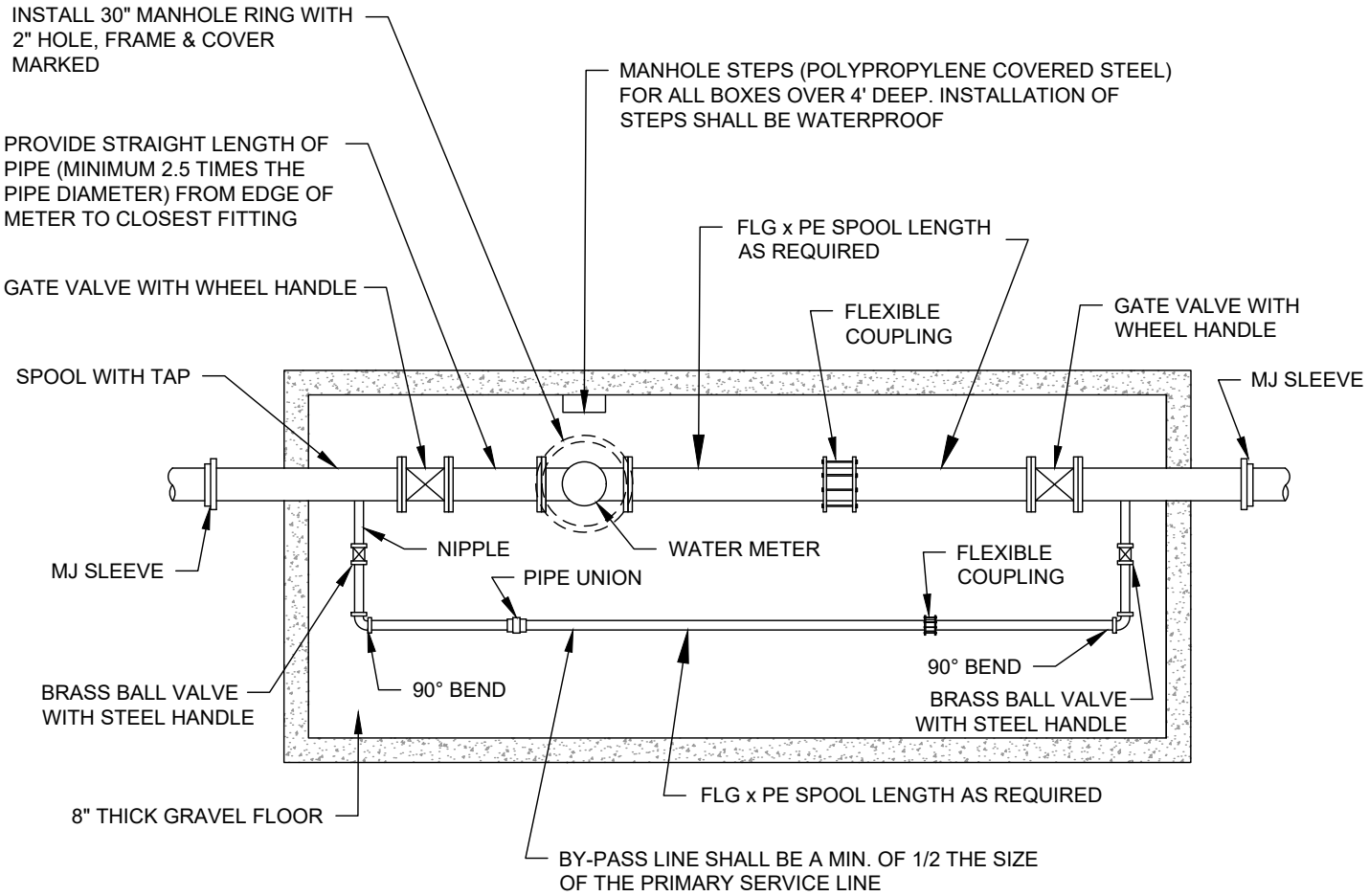

NOTES

1. AN ENGINEERED PRECAST BOX MAY BE ALLOWED AS APPROVED BY THE CITY.
2. STRUCTURAL DESIGN (REINFORCING AND CONCRETE THICKNESS FOR WALLS, FOOTINGS, AND ROOF) WILL DEPEND ON FINAL BOX SIZE.
3. COORDINATE METER BOX PLACEMENT AND OVERALL METER DIMENSIONS WITH LEHI WATER METERING DEPARTMENTS PRIOR TO INSTALLATION.
4. CHANGES DUE TO PIPE SIZE SHALL BE AS APPROVED BY THE CITY WATER SUPERINTENDENT.
5. METER AND MXU SUPPLIED BY LEHI CITY.
6. VAULT LID AND INTERNAL PIPING PROVIDED BY DEVELOPER

LEHI CITY

LEHI CITY STANDARD DETAIL	
CONCRETE METER BOX	
WT-07	DATE: *JANUARY 20*

EXHIBIT B

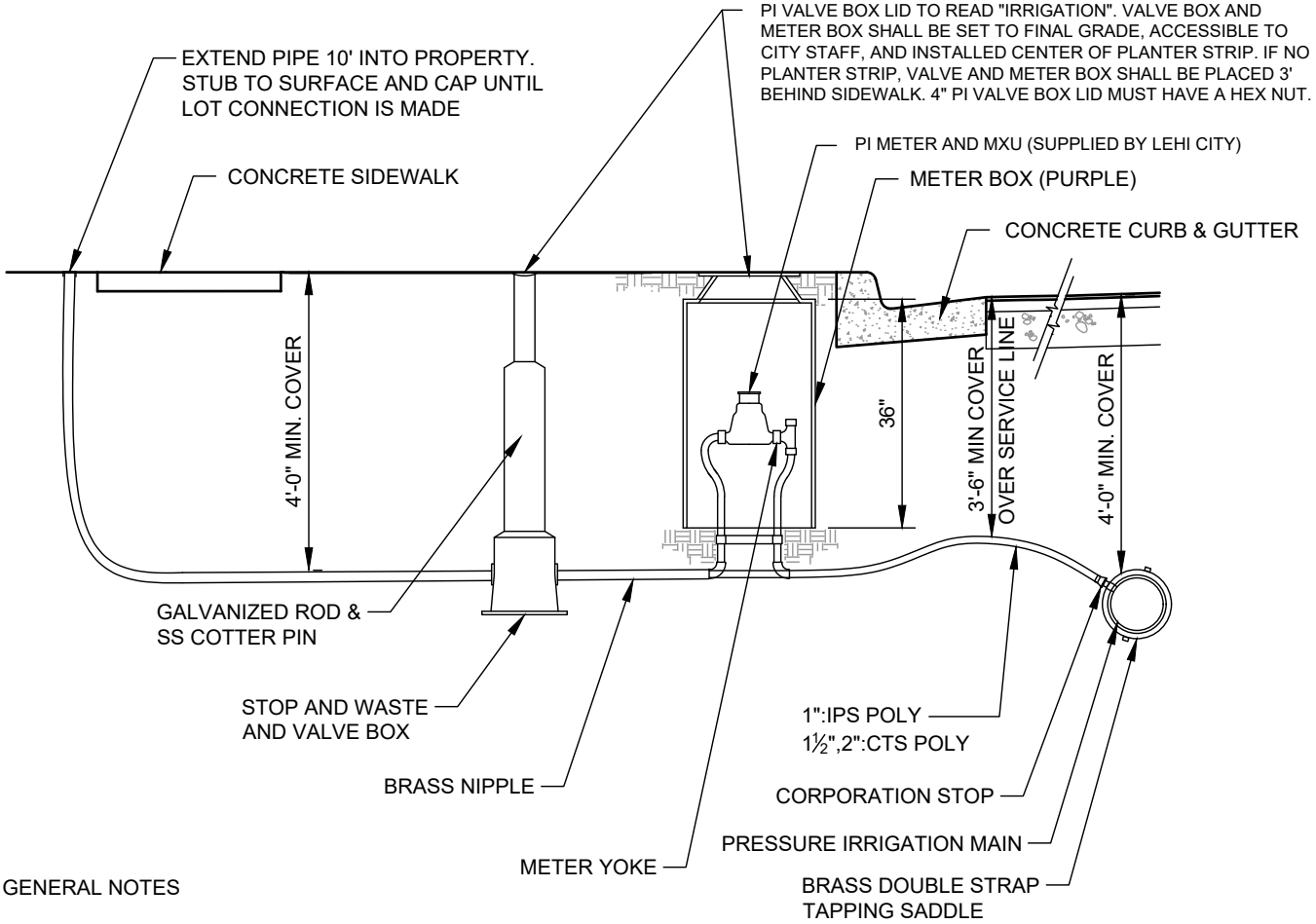

GENERAL NOTES

1. 10'-0" EDGE TO EDGE HORIZONTAL CLEARANCE IS REQUIRED BETWEEN WATER AND SEWER LATERAL SERVICE LINES.

2. WHERE WATER AND SEWER LATERALS MUST CROSS, WATER LATERAL SHALL BE 18" ABOVE THE SEWER LATERAL AS MEASURED FROM THE BOTTOM OF THE WATER LATERAL TO THE TOP OF THE SEWER LATERAL. THIS SEPARATION SHALL BE MAINTAINED FOR A MINIMUM OF 10'-0" EITHER SIDE OF THE CROSSING POINT.

3. ALL PRESSURE IRRIGATION METERS SHALL BE CONSTRUCTED BEHIND PROPOSED CURB AND GUTTER, AND SHALL BE SERVICEABLE FROM THE STREET, REGARDLESS OF WHETHER OR NOT THE TYPICAL STREET CROSS SECTION CONTAINS A PLANTER STRIP.

4. COORDINATE PLACEMENT OF PI METER WITH LEHI WATER DEPARTMENT.

5. TEFLON TAPE REQUIRED ON ALL THREADED CONNECTIONS.

6. PRESSURE IRRIGATION METERS SHALL NOT BE PLACED WITHIN DRIVABLE AREAS UNLESS OTHERWISE APPROVED BY WATER DEPARTMENT.

7. ALL PIPING, FITTINGS, ECT WILL BE PROVIDED BY DEVELOPER AND INSPECTED BY LEHI CITY WATER INSPECTOR.

8. METER AND MXU WILL BE SUPPLIED BY LEHI CITY.

9. ALL BRASS FITTINGS, VALVES, ETC. SHALL BE MANUFACTURED IN ACCORDANCE WITH AWWA STANDARD C-800, LATEST REVISION. ALL BRASS PRODUCTS ARE TO BE CERTIFIED TO THE REQUIREMENTS OF NSF / ANSI 61 ANNEX F&G AND NSF / ANSI 372.

10. METERS THAT FALL WITHIN DRIVEWAYS MAY BE RELOCATED A MAXIMUM OF 3' LATERALLY, OTHERWISE THE SERVICE MUST BE TERMINATED AT THE MAIN AND REINSTALLED OUTSIDE OF THE DRIVEWAY.

PARTS LIST			
PART NAME	METER SIZE		
	1" METER	1 1/2" METER	2" METER
SETTER	FORD VB-74-15W-11-44	FORD VBB76-15-11-66	FORD VBB77-15-11-77
NIPPLE	1X12 BRASS	1-1/2X12 BRASS	2X12 BRASS
STOP AND WASTE	FORD BC-11-444-SW 1	FORD B11-666SW-NL 1 1/2	Ford B11-777SW-NL 2
RING	D&L L-2244	D&L L-2242	
RING ADAPTER	NA	L-2336 30 CI MTR ADPT RING	
LID	DFW12AUT-5MW+T-IRRIG-LID PURPLE		
METER INSULATOR	4x28 FOAM	4x30 FOAM	
VALVE BOX	93D CAST IRON W/HEX NUT		
BASE	NA		M-9094-01
ROD	M-9080 W/COTTER OSW EXT KEY		
METER BOX	SIGMA RMP-212436-PTR	SIGMA RMP-203036-PTR	
SERVICE LINE	1" IPS POLY	1 1/2" CTS POLY	2" CTS POLY
*LISTED MODEL NUMBERS OR APPROVED EQUAL REQUIRED			

LEHI CITY

LEHI CITY STANDARD DETAIL

PRESSURE IRRIGATION SERVICE CONNECTION

WT-08

DATE: JANUARY 20

EXHIBIT B

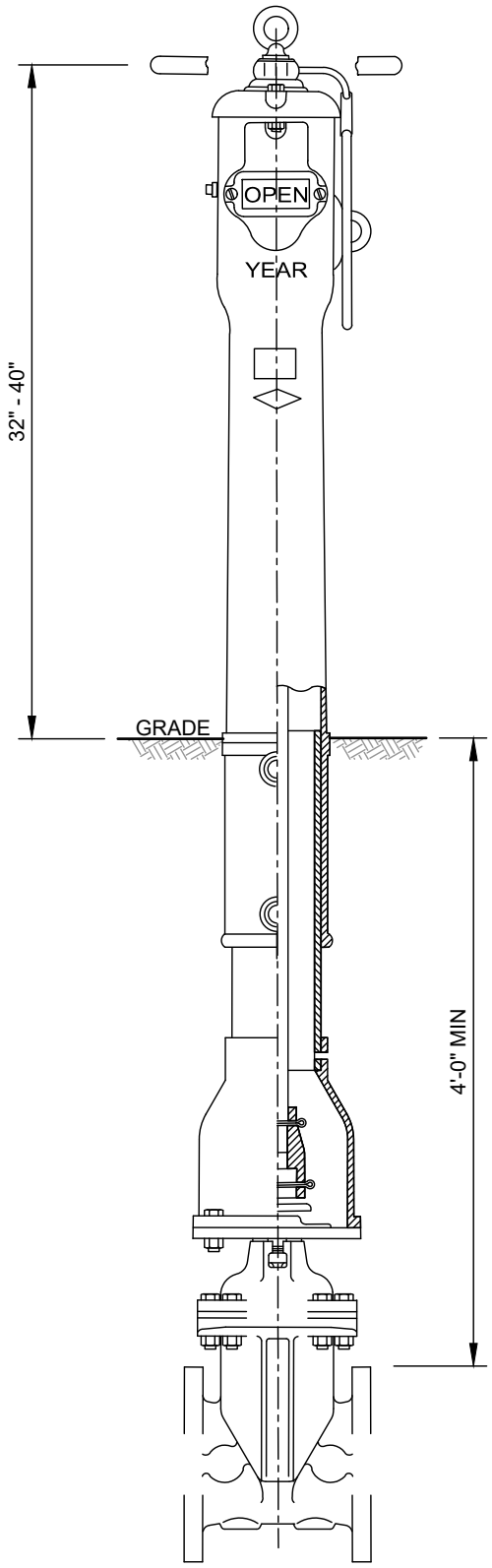

GATE VALVE SHOWN
FOR REFERENCE ONLY

NOTES:

1. MUST BE PLACED IN LINE WITH FDC (FIRE DEPARTMENT CONNECTION), IN PLAIN SITE AND BE READABLE FROM THE STREET.
2. FINAL PLACEMENT SHALL BE AS APPROVED BY THE FIRE CODE OFFICIAL.
3. POST INDICATOR VALVE SHALL BE UL LISTED AND FM APPROVED.
4. POST INDICATOR VALVE SHALL BE A MINIMUM DIAMETER OF 4".
5. A THREE (3) FOOT HORIZONTAL CLEARANCE MUST BE MAINTAINED AROUND THE OUTSIDE OF ALL POST INDICATOR VALVES.
6. THERE SHALL BE NO OTHER VALVES BETWEEN THE POST INDICATOR AND THE FIRE SPRINKLER RISER.
7. THERE SHALL BE NO WATER CONNECTIONS OTHER THAN THE POST INDICATOR VALVE BETWEEN THE MAINLINE VALVE AND THE RISER FLANGE.
8. A POST INDICATOR VALVE IS REQUIRED ON ALL FIRE LINES EXCEPT WHEN THERE IS AN OUTSIDE DOOR TO THE FIRE RISER ROOM AND AS REQUIRED BY THE FIRE MARSHALL.

LEHI CITY

LEHI CITY STANDARD DETAIL	
POST INDICATOR VALVE	
WT-09	DATE: *JANUARY 20*

EXHIBIT B

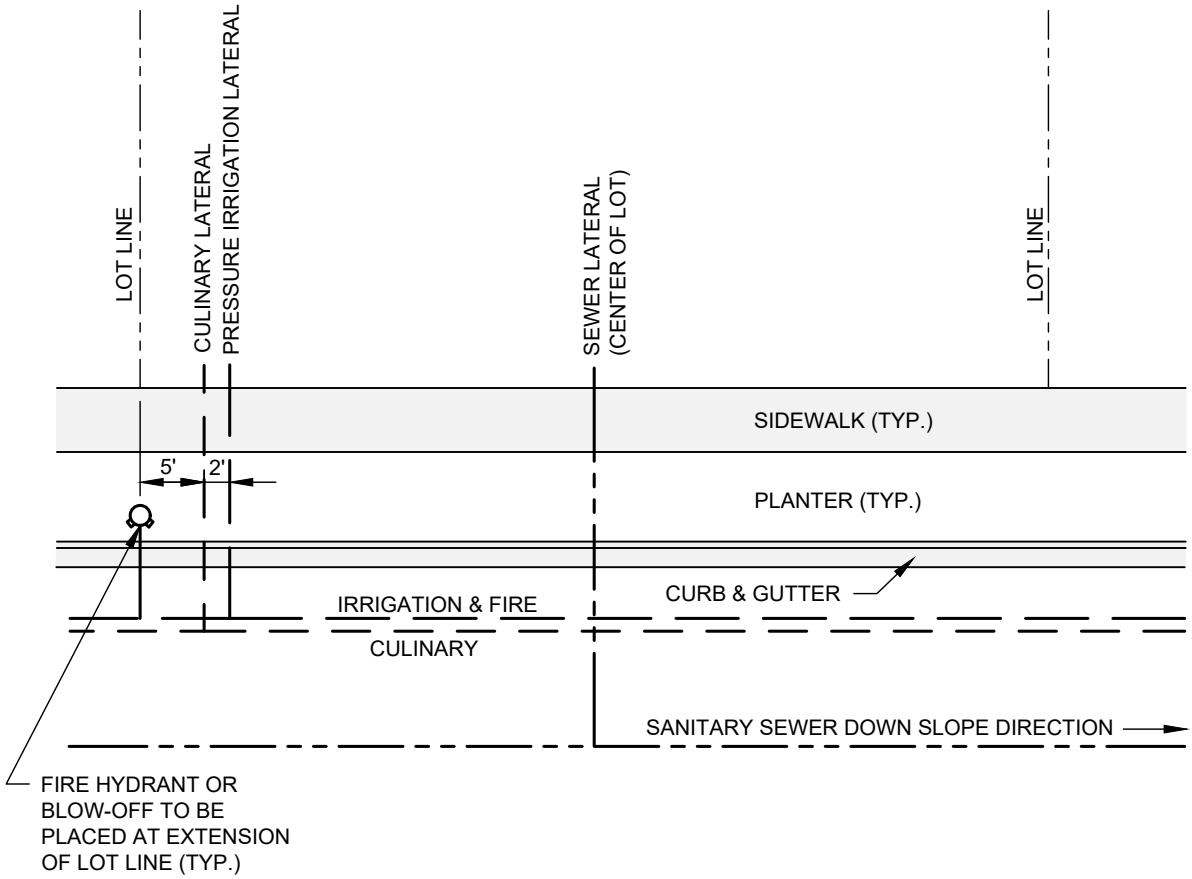

NOTES

1. EACH SUBDIVISION LOT SHALL RECIEVE ONLY ONE (1) OF EACH SERVICE TYPE (WATER, P.I., SEWER OR SUB-DRAIN) UNLESS SPECIFICALLY AUTHORIZED BY THE CITY COUNCIL, CITY ENGINEER AND THE WATER SUPERINTENDANT.

2. ALL REMOVALS OR CHANGES TO EXISTING LATERAL LOCATIONS SHALL BE PERFORMED AT THE DEVELOPERS EXPENSE AND BE INSPECTED BY LEHI CITY STAFF.

3. CULINARY & PRESSURIZED IRRIGATION LATERALS SHOULD BE PLACED AT A 5 FOOT OFFSET FROM THE PROPERTY LINE.

4. LOCATION CHANGES DUE TO LOT SIZE & PHYSICAL CONDITIONS SHALL BE APPROVED BY THE WATER SUPERINTENDANT.

LEHI CITY

LEHI CITY STANDARD DETAIL

TYPICAL SERVICE, HYDRANT & BLOW-OFF LOCATIONS

WT-10

DATE: *JANUARY 20*

EXHIBIT B

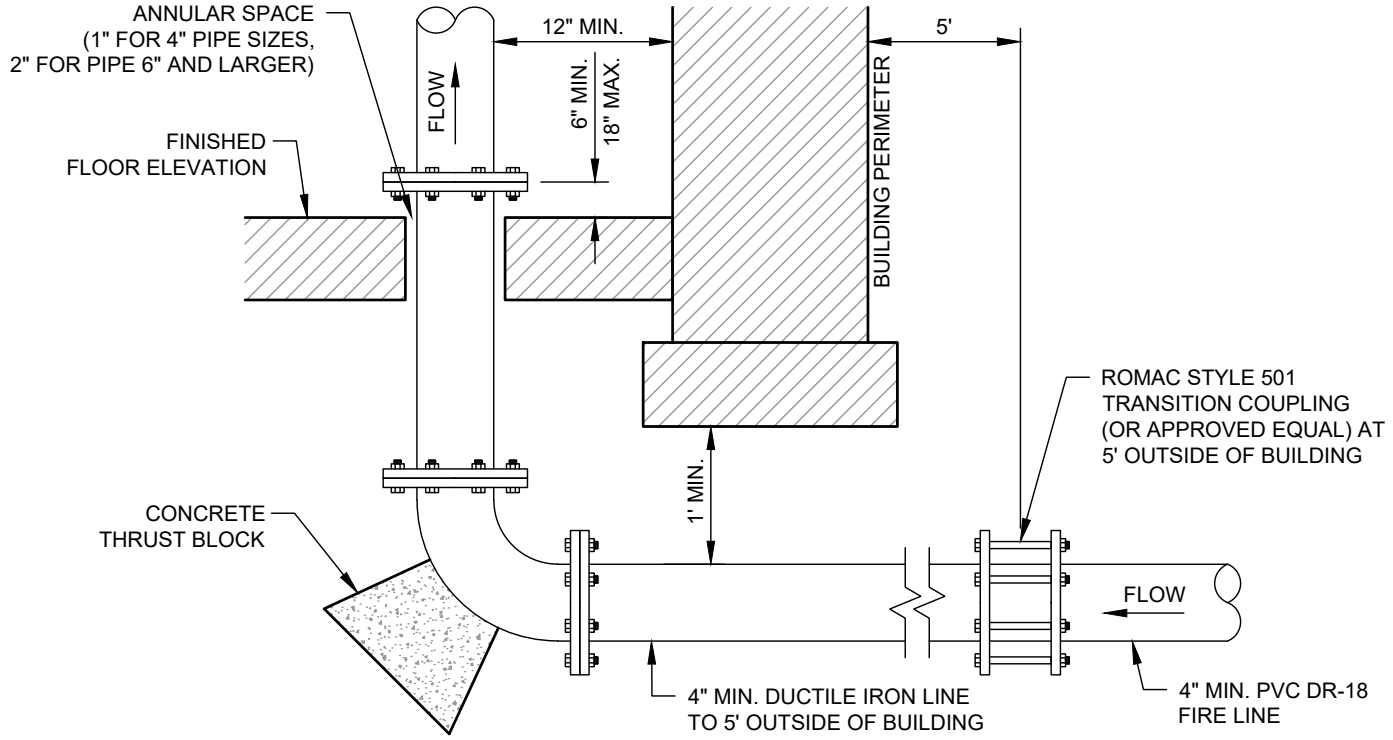

FIRE RISER DETAIL (CLASS 50 DUCTILE IRON)

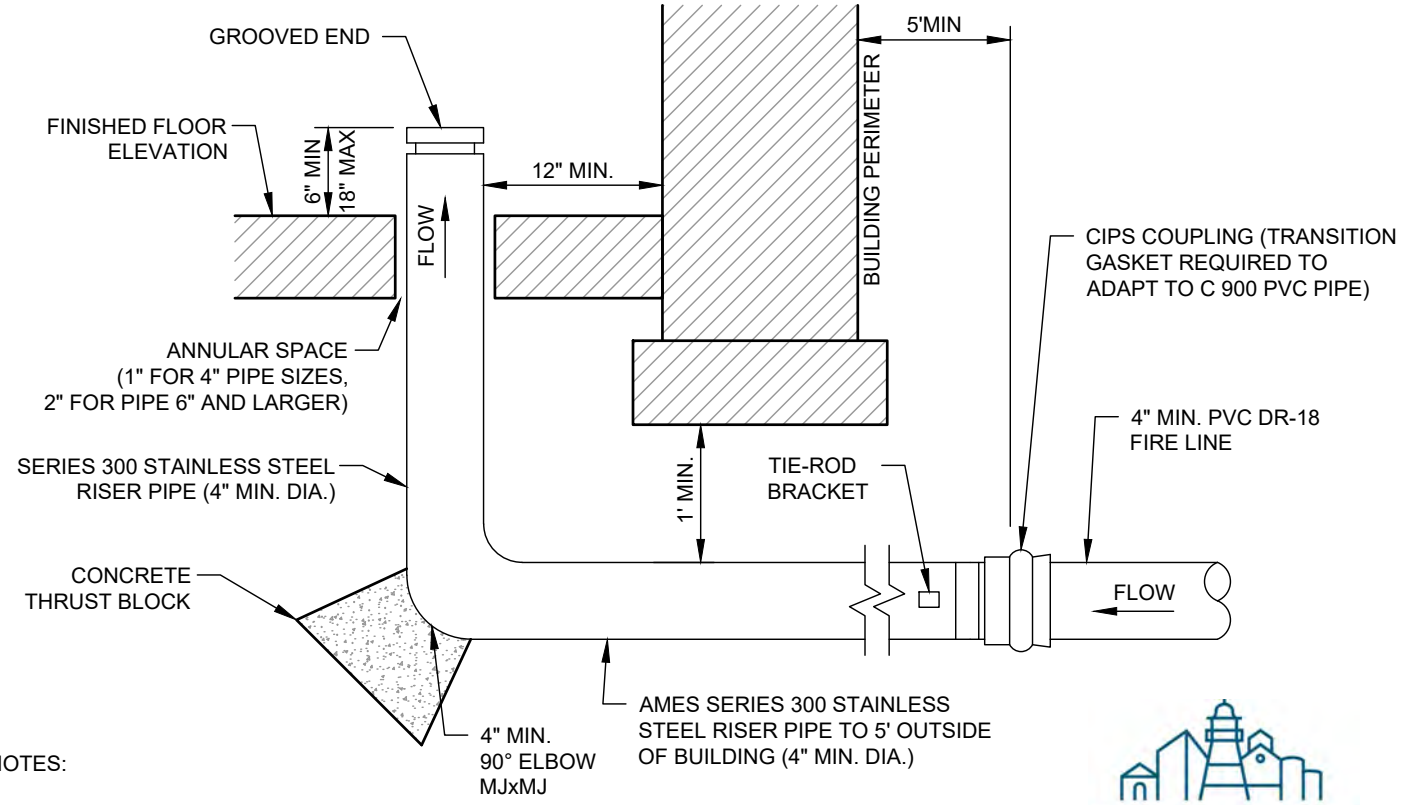

NOTES:

1. CLEAR & UNOBSTRUCTED WIDTH OF 36" IN FRONT OF ALL EQUIPMENT REQUIRED.
2. DOOR SWING SHALL BE IN AN OUTWARD DIRECTION.
3. THE FIRE LINE SHALL NOT EXTEND MORE THAN 10 FEET UNDER THE FLOOR SLAB.

UNDERGROUND FIRE RISER DETAIL (STAINLESS STEEL)

LEHI CITY

LEHI CITY STANDARD DETAIL	
TYPICAL FIRE RISER DETAILS	
WT-11	DATE: *JANUARY 20*

EXHIBIT B

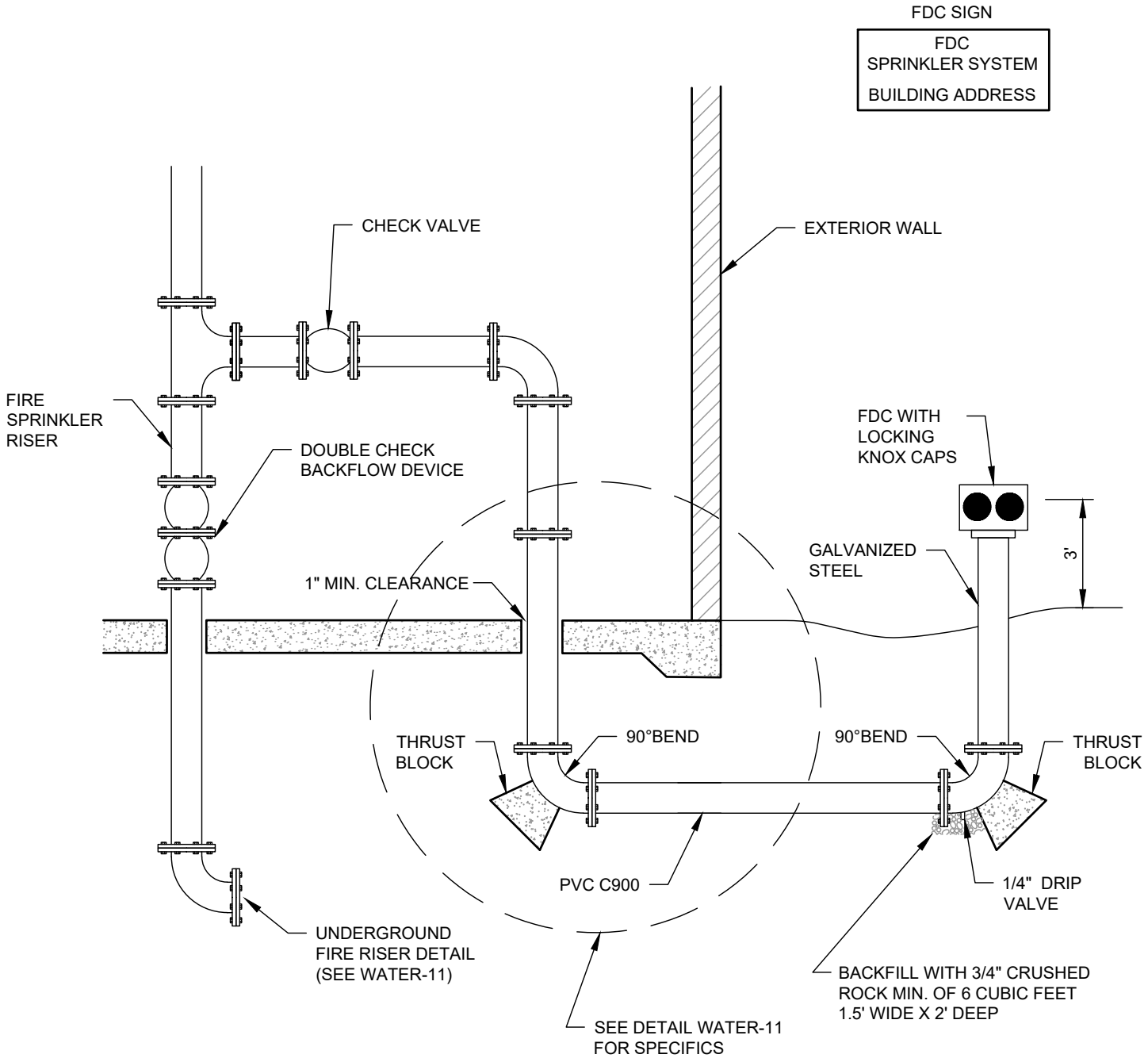

REMOTE FIRE DEPARTMENT CONNECTION

NOTES:

1. BY APPROVAL OF THE FIRE CODE OFFICIAL.
2. PROVIDE BUILDING ID ON FDC THE SIGN SHALL BE 12" x 12" x 2" WHITE LETTERS ON A RED REFLECTIVE BACKGROUND.
3. NO OBSTRUCTIONS, PLANTS, ETC. WITHIN 3' OF THE FDC.
4. 4' x 4' x 6" CONCRETE PAD AT BASE OF FDC.
5. FDC SHALL BE WITHIN 100' OF A FIRE HYDRANT.

LEHI CITY

LEHI CITY STANDARD DETAIL	
REMOTE FIRE DEPARTMENT CONNECTION	
WT-12	DATE: *JANUARY 2022*

EXHIBIT B

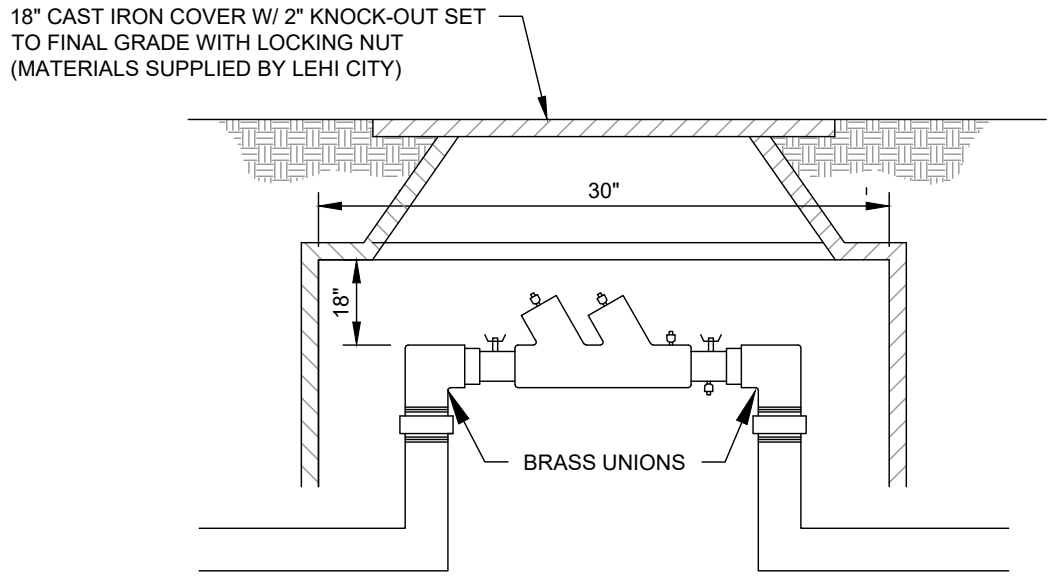

DOUBLE CHECK BACKFLOW PREVENTER

NOTES:

1. MUST BE INSTALLED IN A 30" METER BOX.
2. PIPEWORK MUST BE BRASS OR RIGID COPPER (ONLY). ALL PARTS SHALL CONFORM TO THE AWWA C-800 NO LEAD RULE.
3. AFTER INSTALLATION, BACKFLOW PREVENTER MUST BE TESTED WITHIN 10 DAYS AND RESULTS GIVEN TO LEHI CITY WATER DEPARTMENT.
4. DOUBLE CHECK BACKFLOW PREVENTOR INSTALLED IN A VAULT MUST BE TESTABLE AND MAINTAINABLE FROM THE TOP POSITION.

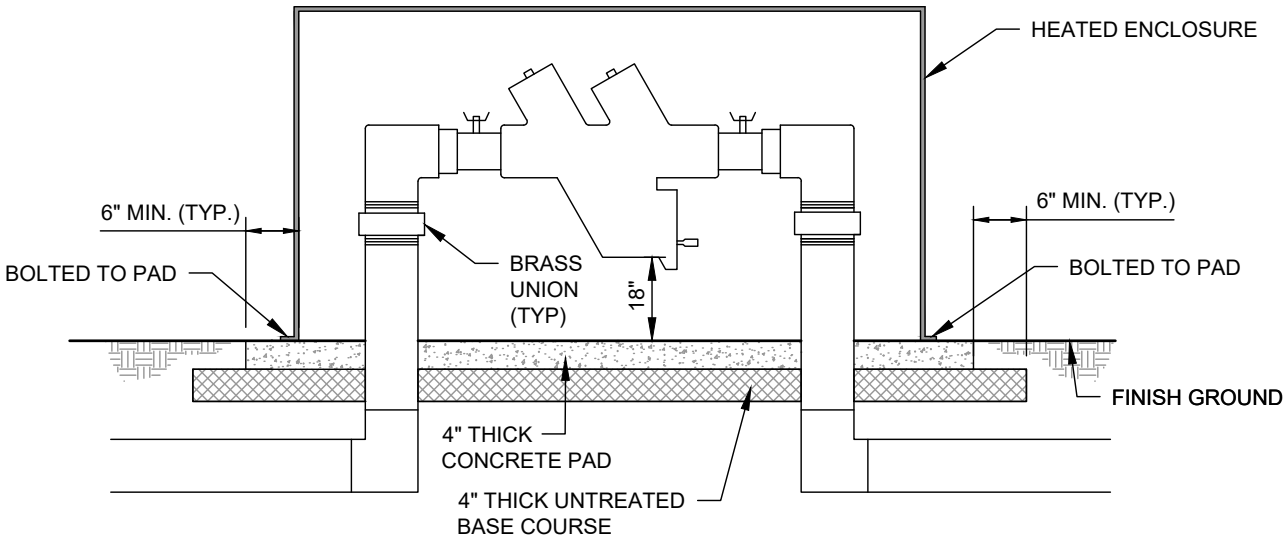

REDUCED PRESSURE BACKFLOW PREVENTER

NOTES:

1. PIPEWORK MUST BE BRASS OR RIGID COPPER (ONLY). ALL PARTS SHALL CONFORM TO THE AWWA C-800 NO LEAD RULE.
2. HEAT SOURCE DESIGNED TO PROTECT BACKFLOW PREVENT TO -30 F MUST BE INSTALLED WITHIN HEATED ENCLOSURE.
3. HEATED ENCLOSURE MUST BE INSTALLED AND ANCHORED TO PAD.
4. AFTER INSTALLATION, BACKFLOW PREVENTER MUST BE TESTED WITHIN 10 DAYS AND RESULTS GIVEN TO LEHI CITY WATER DEPARTMENT.

LEHI CITY

LEHI CITY STANDARD DETAIL	
BACKFLOW PREVENTION	
WT-13	DATE: *JANUARY 20*

EXHIBIT B

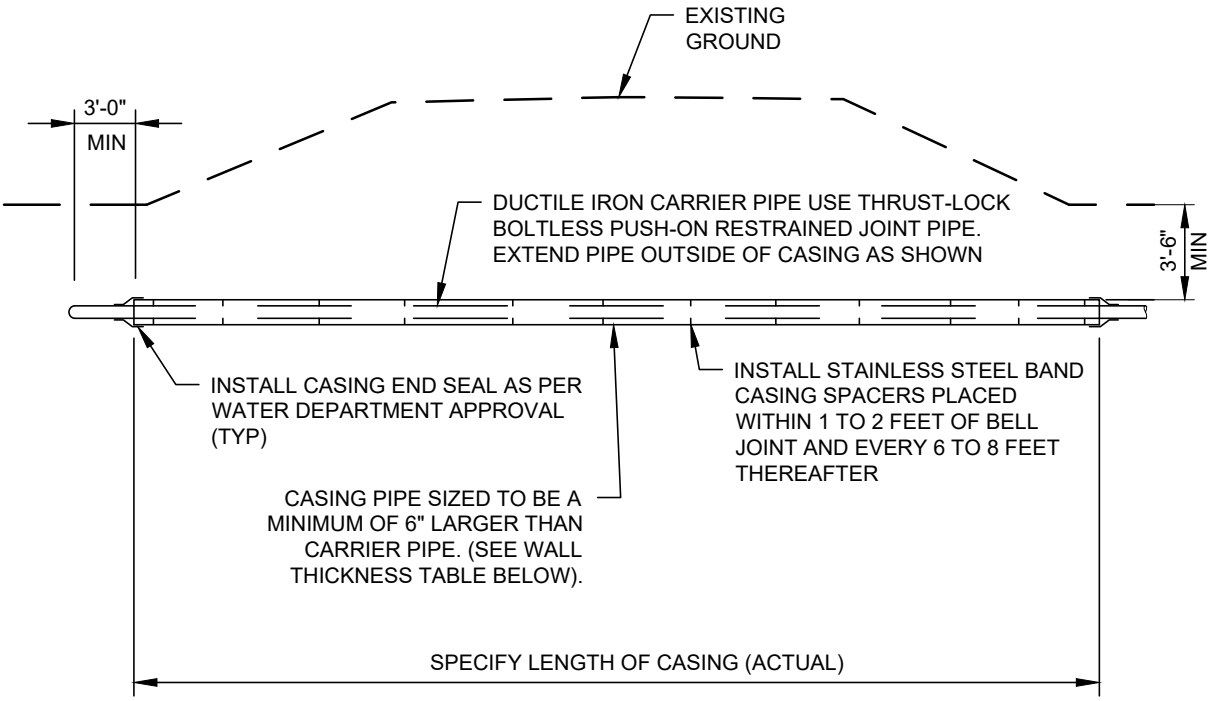

STEEL CASING PIPE WALL THICKNESS TABLE	
MINIMUM THICKNESS	DIAMETER OF CASING PIPE
1/4"	12" OR LESS
5/16"	12" - 18"
3/8"	18" - 22"
7/16"	22" - 28"
1/2"	28" - 34"
9/16"	34" - 42"
5/8"	42" - 48"
AS APPROVED	OVER 48"

* THIS CHART IS ONLY FOR SMOOTH STEEL CASING PIPES WITH A MINMUM YEILD STRENGTH OF 35,000 PSI.

* CASING PIPES LARGER THAN 48" OR WITH ANY PORTION DEEPER THAN 20 FEET SHALL REQUIRE STAMPED STRUCTURAL CALCULATIONS PRIOR TO APPROVAL

LEHI CITY

LEHI CITY STANDARD DETAIL

UTILITY CASING

WT-14

DATE: JANUARY 20

EXHIBIT B

KNOX BRAND LOCKING FDC CAP
(FOR EXTERIOR FIRE DEPARTMENT CONNECTIONS)

KNOX BRAND LOCKING STANDPIPE CAP
(FOR STANDPIPE HOSE CONNECTIONS)

PURCHASE THROUGH LOCAL KNOX
VENDOR OR AT KNOXBOX.COM

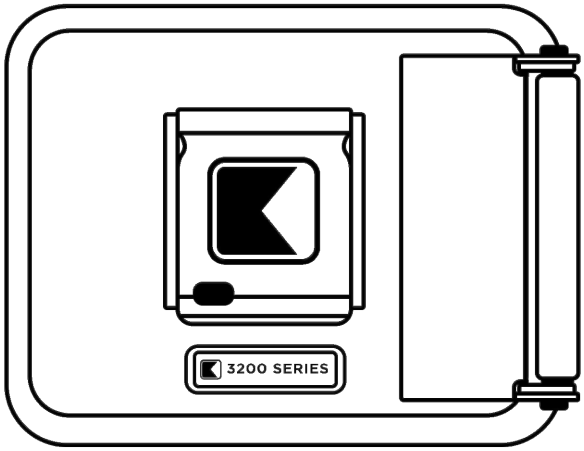

KNOX BOX, FLUSH OR SURFACE MOUNTED
(3200 SERIES)
(MULTIPLE BOXES MAY BE REQUIRED)

TO BE MOUNTED BETWEEN 5'-6' ABOVE
FINISHED FLOOR GRADE

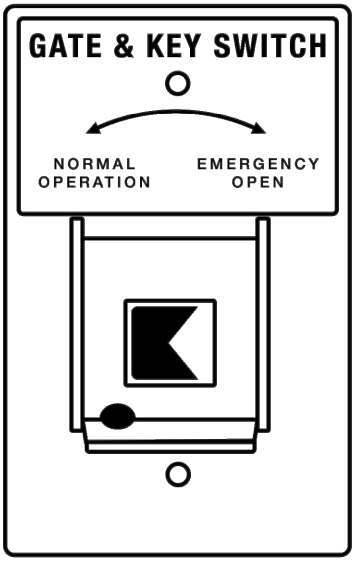

KNOX GATE SWITCH
(FOR ELECTRONIC GATE ACCESS)

LEHI CITY

LEHI CITY STANDARD DETAIL	
FIRE DEPARTMENT	
WT-15	DATE: *MAY 2024*

EXHIBIT B

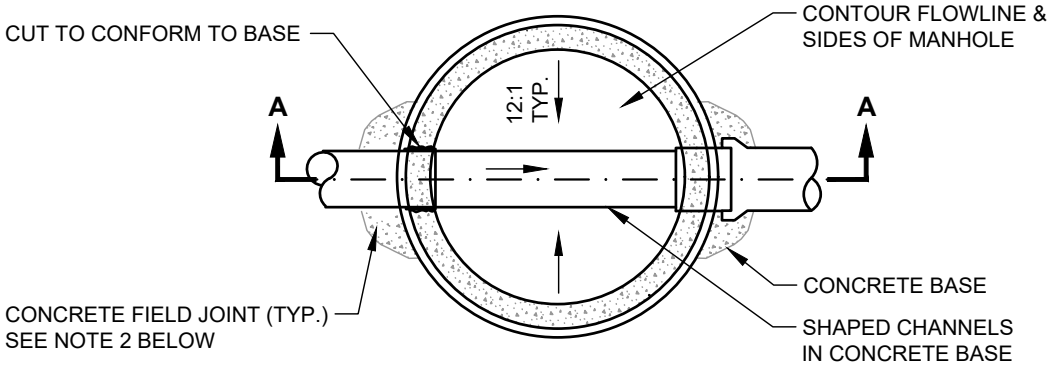

SECTION A-A

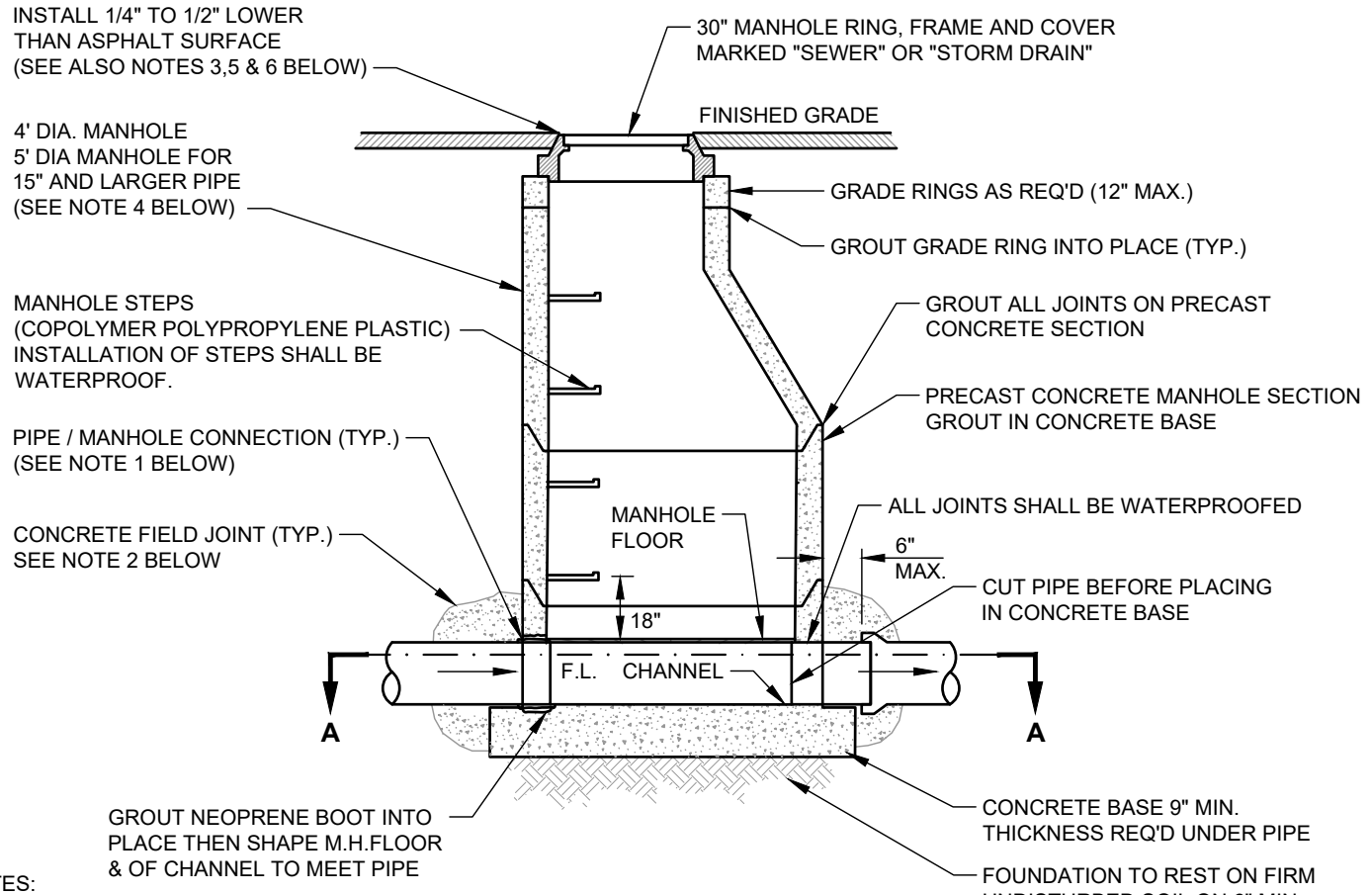

NOTES:

1. INSTALL NEOPRENE BOOT WITH STAINLESS STEEL BANDS & GROUT INSIDE OF MANHOLE FOR SANITARY SEWER PIPE CONNECTIONS. GROUT INSIDE & OUTSIDE PIPE CONNECTIONS FOR STORM DRAIN & OTHER DRAINAGE PIPES.
2. INSTALL 8" THICK CONCRETE FIELD JOINT AROUND ALL STORM DRAINAGE PIPES (TYP.). INSTALL AROUND ALL CONCRETE SEWER PIPES 18" DIA. & LARGER.
3. MANHOLE RING & COVER SHALL MATCH GRADE & CROSS SLOPE OF ROADWAY. ("TWIST", ROTATING OR ADJUSTABLE MANHOLE RING & COVER MAY BE REQUIRED).
4. LARGER MANHOLES MAY BE REQUIRED DEPENDING ON PIPE SIZINGS AND ORIENTATION WITHIN MANHOLE.
5. TOP OF MANHOLE COVER SHALL BE SET TO FINAL GRADE PRIOR TO PAVING. CONCRETE COLLARS MAY BE ALLOWED, BUT ONLY AFTER PRIOR APPROVAL OF LEHI CITY STREET DEPARTMENT. IF APPROVED, CONCRETE COLLARS SHALL BE 12" MIN. WIDE (FROM EDGE OF MANHOLE RING) AND 12" MIN. THICKNESS.
6. IN NON-PAVED AREAS, A 12" THICK BY 12" WIDE (FROM EDGE OF MANHOLE RING) CONCRETE COLLAR SHALL BE PROVIDED FLUSH WITH THE TOP OF THE MANHOLE COVER.

LEHI CITY

LEHI CITY STANDARD DETAIL

LINE MANHOLE (SEWER & STORM DRAIN)

SD-01

DATE: JANUARY 20

EXHIBIT B

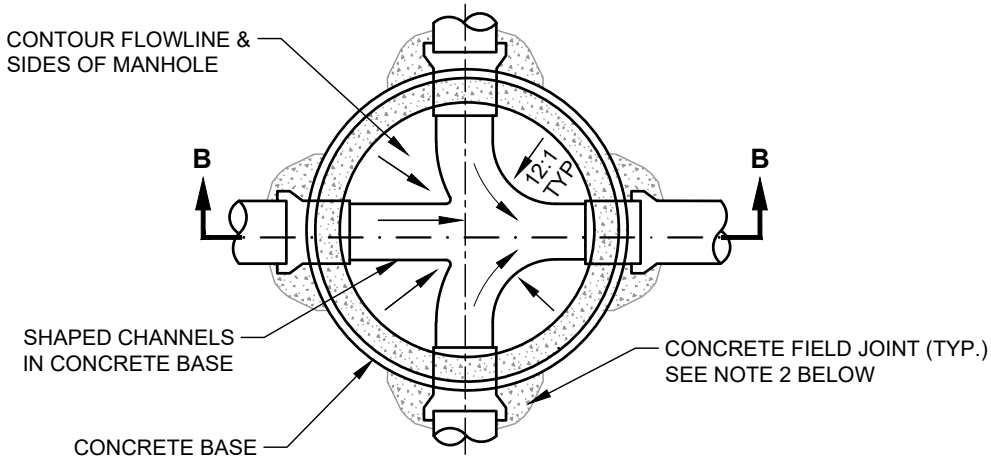

SECTION B-B

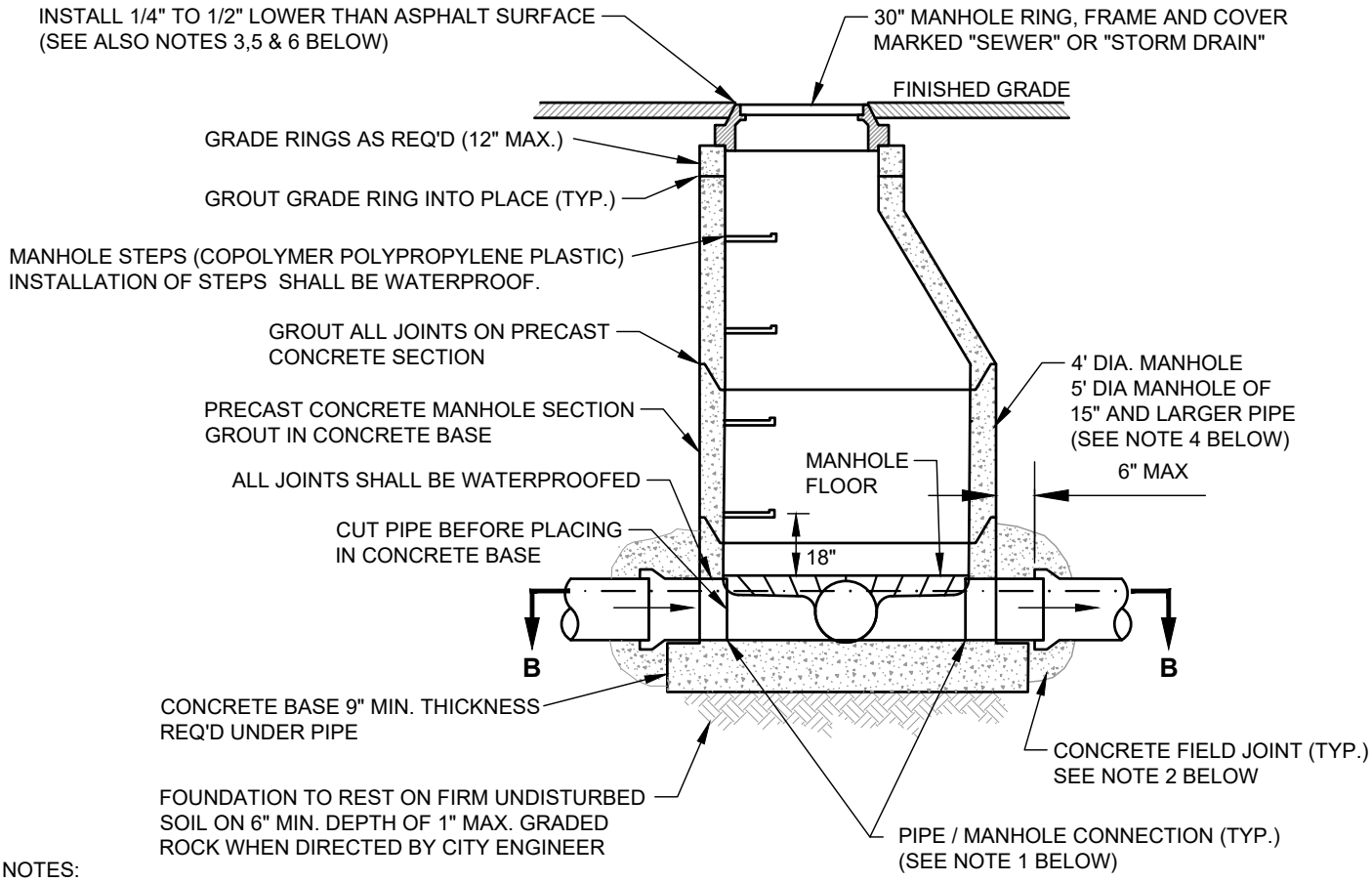

NOTES:

1. INSTALL NEOPRENE BOOT WITH STAINLESS STEEL BANDS & GROUT INSIDE OF MANHOLE FOR SANITARY SEWER PIPE CONNECTIONS. GROUT INSIDE & OUTSIDE PIPE CONNECTIONS FOR STORM DRAIN & OTHER DRAINAGE PIPES.
2. INSTALL 8" THICK CONCRETE FIELD JOINT AROUND ALL STORM DRAINAGE PIPES (TYP.). INSTALL AROUND ALL CONCRETE SEWER PIPES 18" DIA. & LARGER.
3. MANHOLE RING & COVER SHALL MATCH GRADE & CROSS SLOPE OF ROADWAY. ("TWIST", ROTATING OR ADJUSTABLE MANHOLE RING & COVER MAY BE REQUIRED).
4. LARGER MANHOLES MAY BE REQUIRED DEPENDING ON PIPE SIZINGS AND ORIENTATION WITHIN MANHOLE.
5. TOP OF MANHOLE COVER SHALL BE SET TO FINAL GRADE PRIOR TO PAVING. CONCRETE COLLARS MAY BE ALLOWED, BUT ONLY AFTER PRIOR APPROVAL OF LEHI CITY STREET DEPARTMENT. IF APPROVED, CONCRETE COLLARS SHALL BE 12" MIN. WIDE (FROM EDGE OF MANHOLE RING) AND 12" MIN. THICKNESS.
6. IN NON-PAVED AREAS, A 12" THICK BY 12" WIDE (FROM EDGE OF MANHOLE RING) CONCRETE COLLAR SHALL BE PROVIDED FLUSH WITH THE TOP OF THE MANHOLE COVER.

LEHI CITY

LEHI CITY STANDARD DETAIL

JUNCTION MANHOLE (SEWER & STORM DRAIN)

SD-02

DATE: *JANUARY 20*

EXHIBIT B

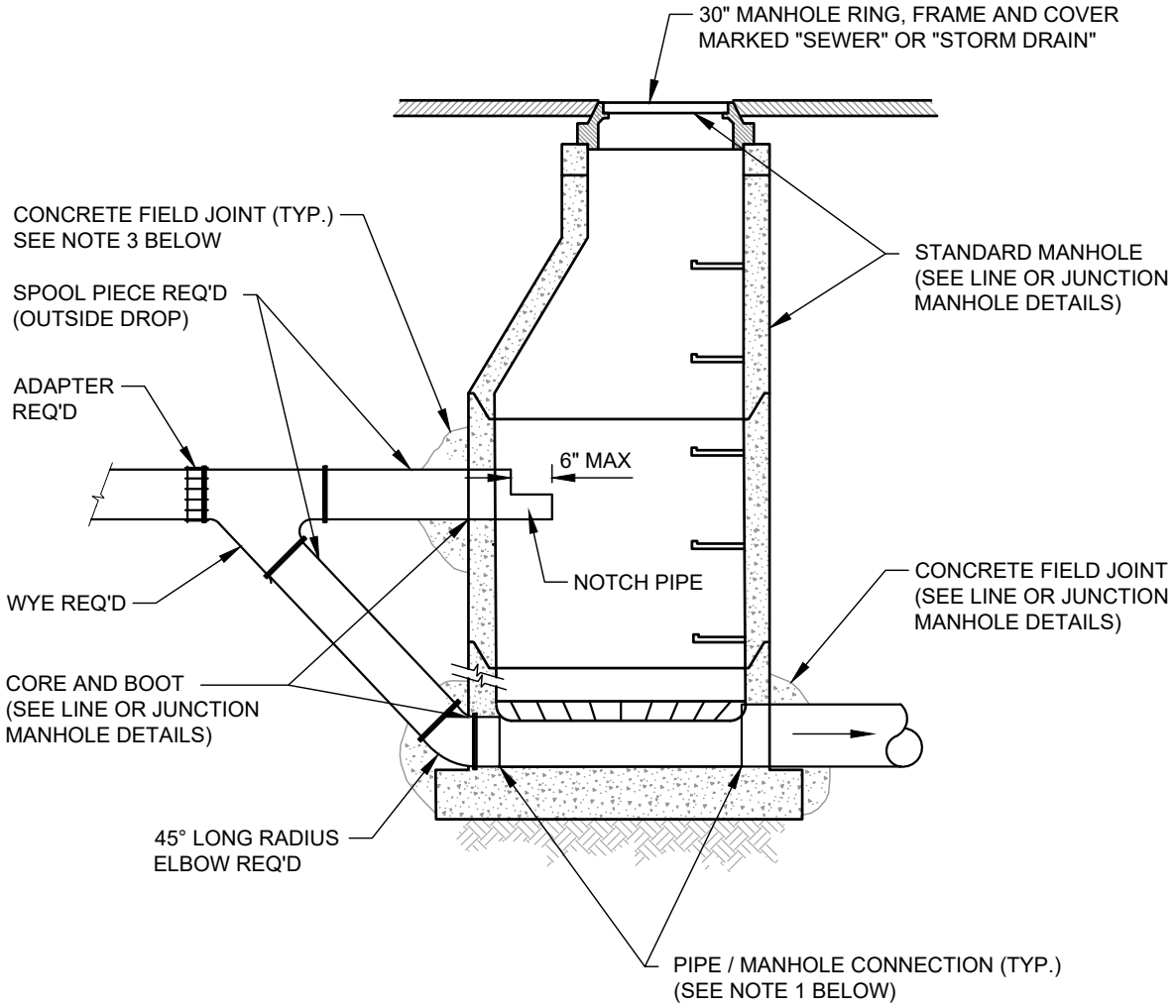

NOTES:

1. DROP MANHOLES MAY BE REQUIRED FOR PIPES ENTERING 24" OR MORE ABOVE THE INVERT OF THE MANHOLE. EXTERNAL DROP MANHOLES MAY BE USED ONLY AS APPROVED BY WATER AND WASTEWATER SUPERINTENDENT.

2. LATERAL SHALL NOT ENTER MANHOLES UNLESS OTHERWISE APPROVED BY CITY ENGINEER AND CITY PUBLIC WORKS DIRECTOR.

3. INSTALL 8" THICK CONCRETE FIELD JOINT AROUND PIPE (TYP.)

LEHI CITY

LEHI CITY STANDARD DETAIL

EXTERNAL DROP MANHOLE (SEWER & STORM DRAIN)

SD-03

DATE: *JANUARY 20*

EXHIBIT B

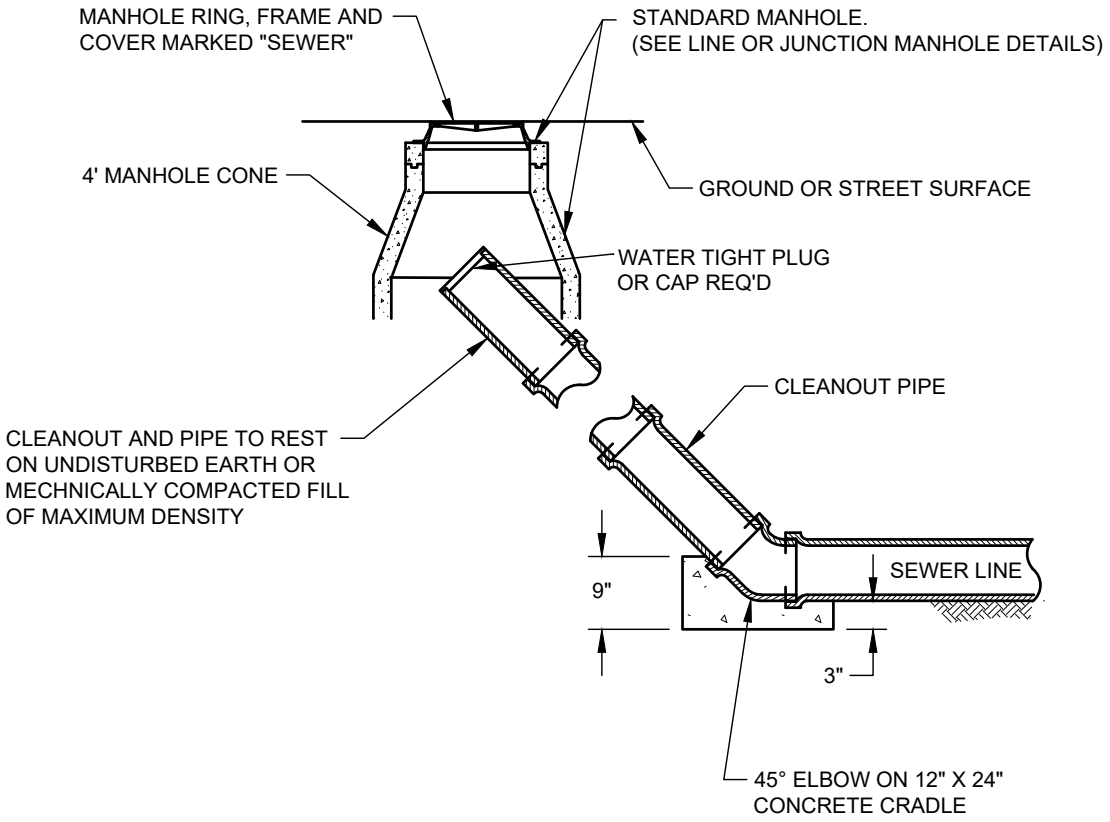

LEHI CITY

LEHI CITY STANDARD DETAIL	
TEMPORARY SEWER MAIN CLEANOUT	
SD-04	DATE: *JANUARY 20*

EXHIBIT B

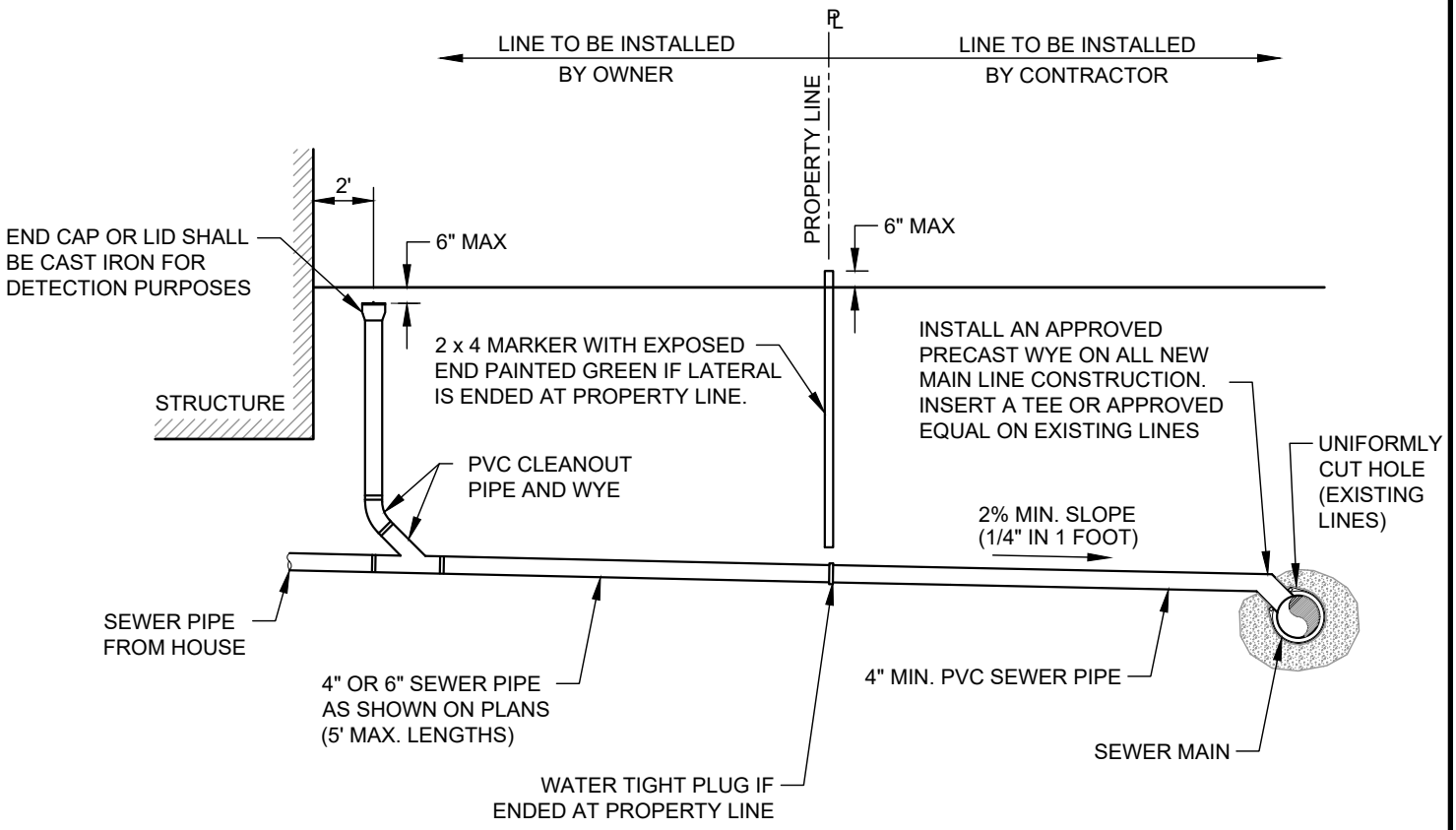

NOTES:

1. MAXIMUM DISTANCE BETWEEN CLEANOUTS: 100 FEET

2. LATERALS SHALL NOT ENTER MANHOLES UNLESS OTHERWISE APPROVED BY CITY ENGINEER

LEHI CITY

LEHI CITY STANDARD DETAIL	
SEWER LATERAL	
SD-05	DATE: *JANUARY 20*

EXHIBIT B

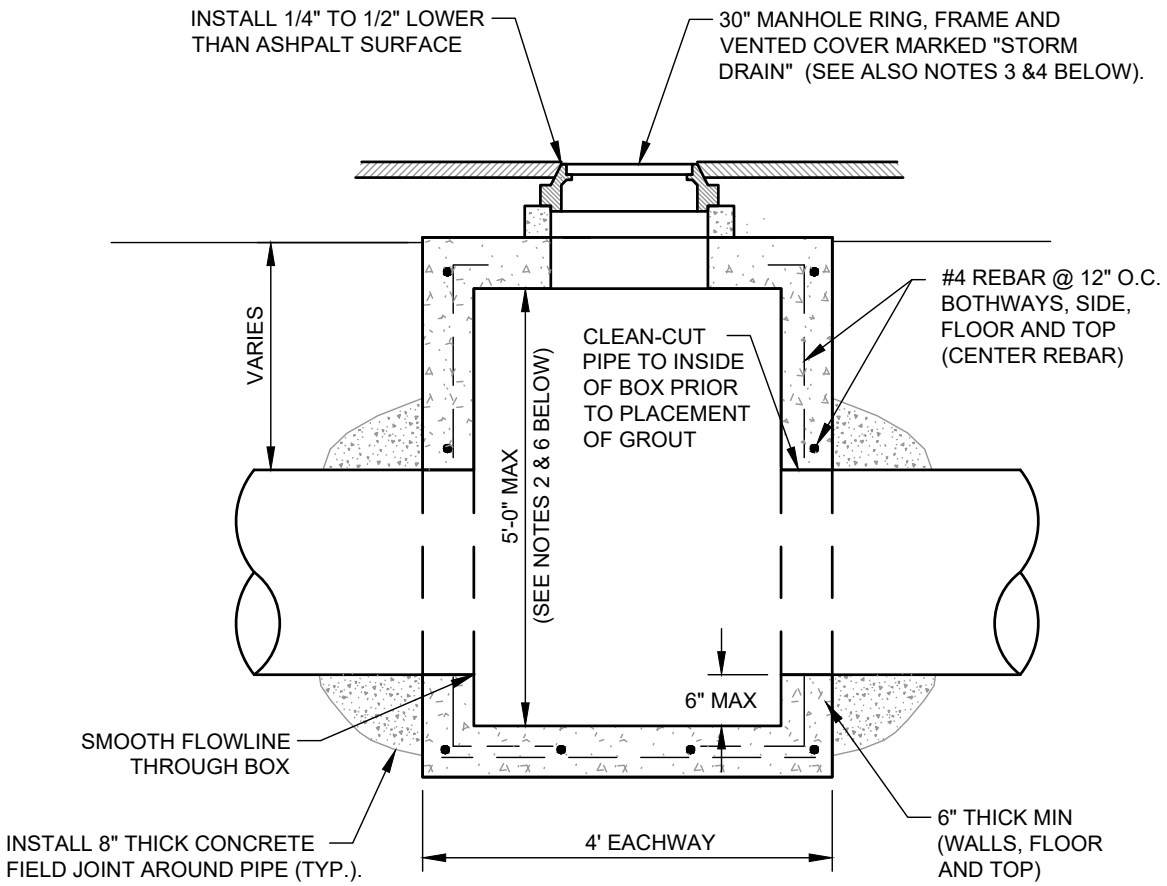

NOTES:

1. AN ENGINEERED PRECAST BOX MAY BE ALLOWED AS APPROVED BY THE CITY

2. FOR DEPTHS NOT TO EXCEED 5', OTHERWISE USE STANDARD LINE OR JUNCTION MANHOLE

3. MANHOLE RING & COVER SHALL MATCH GRADE & CROSS SLOPE OF ROADWAY. (TWIST, ROTATING OR ADJUSTABLE MANHOLE RING & COVER MAY BE REQUIRED).

4. VENTED RING, COVER & BOX SHALL BE CAPABLE OF SUPPORTING TRAFFIC LOADS. RING & COVER MAY BE SUBSTITUTED WITH A GRATED LID WHEN OUTSIDE OF PAVED ROADWAY AREAS (AS APPROVED BY THE CITY ENGINEER OR PUBLIC WORKS DIRECTOR), BUT SHALL ALSO BE CAPABLE OF SUPPORTING TRAFFIC LOADS.

5. 3'X3' I.D. CLEANOUT BOX MAY BE REQUIRED IF MORE THAN ONE PIPE ENTERS / EXITS BOX.

6. BMP "SNOUT" MAY BE REQUIRED WITHIN STORM DRAINAGE BOXES TO MEET STORM WATER QUALITY REQUIREMENT. CLEAN OUT BOX DEPTH SHALL BE MODIFIED TO MEET "SNOUT" MANUFACTURER'S GUIDELINES. ORIFICE PLATES SHOULD NOT BE INSTALLED BEHIND "SNOUT" HOODS.

LEHI CITY

LEHI CITY STANDARD DETAIL

DRAIN CLEAN-OUT BOX

SD-06

DATE: *JANUARY 20*

EXHIBIT B

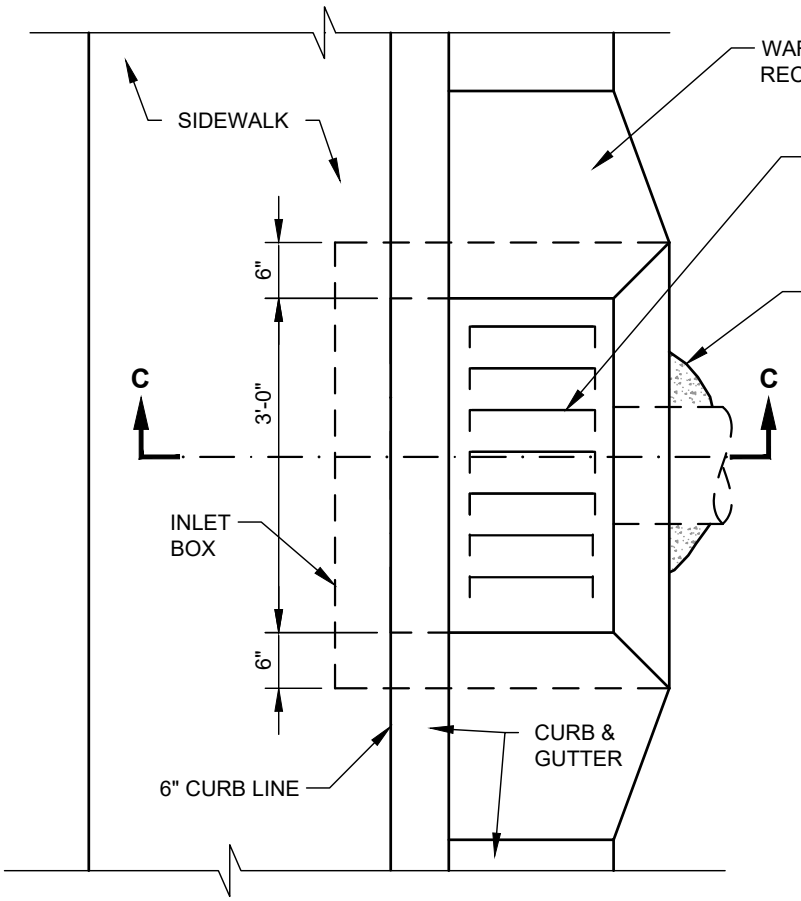

PLAN VIEW

NOTES:

1. ALL FRAMES AND GRATES TO BE GALVANIZED.
2. ALL GRATES TO BE BICYCLE SAFE.
3. COMBO BOX REQUIRED IF MORE THAN ONE PIPE IS TO BE LOCATED WITHIN INLET BOX, BOX DEPTH EXCEEDS 5', OR IF "SNOUTS" ARE REQUIRED TO MEET STORM WATER QUALITY REQUIREMENTS.
4. MANHOLE STEPS SHALL NOT BE PLACED WITHIN INLET BOXES.
5. CURB FACE OPENING: MAKE OPENING AT LEAST 4 INCHES HIGH. PROVIDE AT LEAST A 2 INCH DROP FROM THE CONCRETE GUTTER FLOWLINE TO THE TOP OF THE GRATE AT THE CURB FACE OPENING.

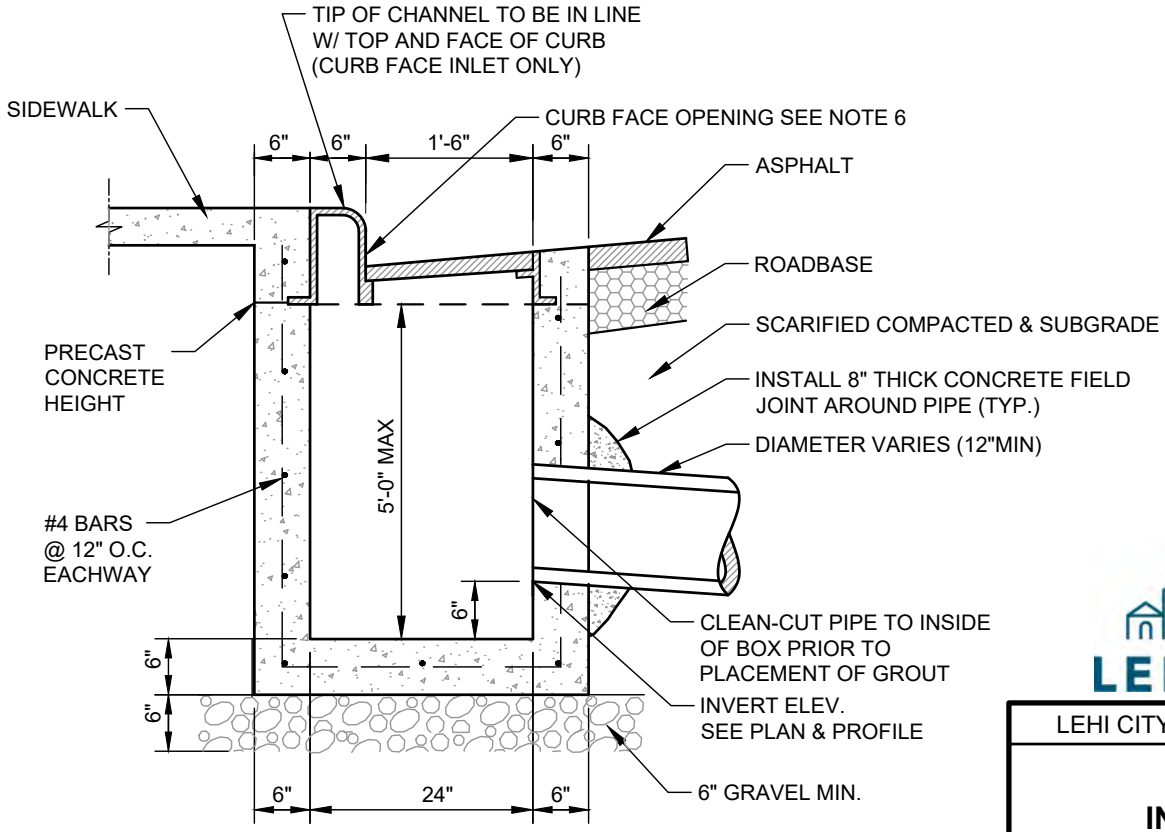

SECTION C

LEHI CITY

LEHI CITY STANDARD DETAIL	
INLET BOX	
SD-07	DATE: JANUARY 20

EXHIBIT B

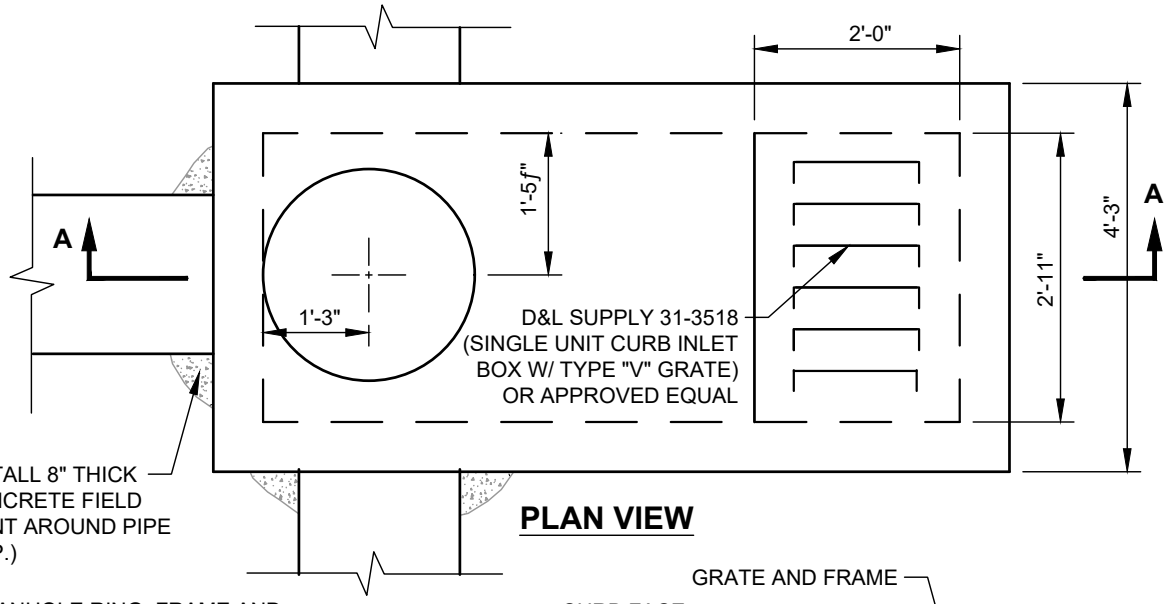

PLAN VIEW

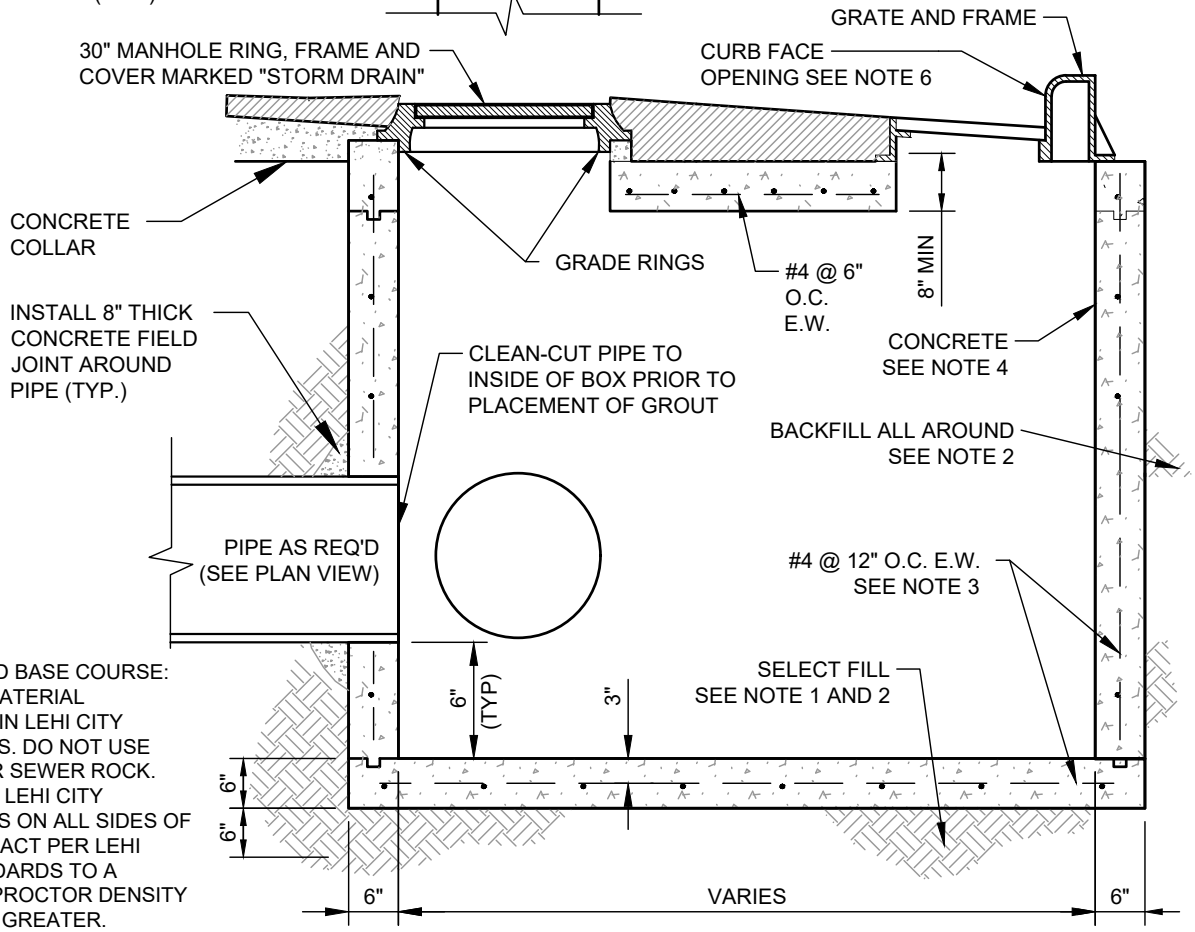

SECTION A-A

NOTES:

1. UNTREATED BASE COURSE: PROVIDE MATERIAL SPECIFIED IN LEHI CITY STANDARDS. DO NOT USE GRAVEL OR SEWER ROCK. PLACE PER LEHI CITY STANDARDS ON ALL SIDES OF BOX. COMPACT PER LEHI CITY STANDARDS TO A MODIFIED PROCTOR DENSITY OF 95% OR GREATER. MAXIMUM LIFT THICKNESS IS 8" BEFORE COMPACTION.
2. BACKFILL: PROVIDE AND PLACE PER LEHI CITY STANDARDS ON ALL SIDES OF BOX. COMPACT PER LEHI CITY STANDARDS TO A MODIFIED PROCTOR DENSITY OF 95% OR GREATER. MAXIMUM LIFT THICKNESS IS 8" BEFORE COMPACTION.
3. REINFORCEMENT: ASTM A 615, GRADE 60, DEFORMED STEEL. SEE LEHI CITY STANDARDS.
4. CONCRETE: CLASS 4000 PER LEHI CITY STANDARDS. PLACE PER LEHI CITY STANDARDS. CURE PER LEHI CITY STANDARDS.
5. MANHOLE STEPS: PROVIDE COPOLYMER POLYPROPYLENE PLASTIC COATED MANHOLE STEPS IN BOXES OVER FOUR FEET DEEP. PLACE BOTTOM STEP SIX INCHES ABOVE BOTTOM OF FLOOR. INSTALLATION OF STEPS SHALL BE WATERPROOFED.
6. CURB FACE OPENING: MAKE OPENING AT LEAST 4 INCHES HIGH. PROVIDE AT LEAST A 2 INCH DROP FROM THE CONCRETE GUTTER FLOWLINE TO THE TOP OF THE GRATE AT THE CURB FACE OPENING.
7. BMP "SNOUT" MAY BE REQUIRED WITHIN STORM DRAINAGE BOXES TO MEET STORM WATER QUALITY REQUIREMENTS. COMBO BOX DEPTH SHALL BE MODIFIED TO MEET "SNOUT" MANUFACTURER'S GUIDLINES. ORIFICE PLATES SHOULD NOT BE INSTALLED BEHIND "SNOUT" HOODS.

LEHI CITY

LEHI CITY STANDARD DETAIL	
COMBO BOX	
SD-08	DATE: JANUARY 20

EXHIBIT B

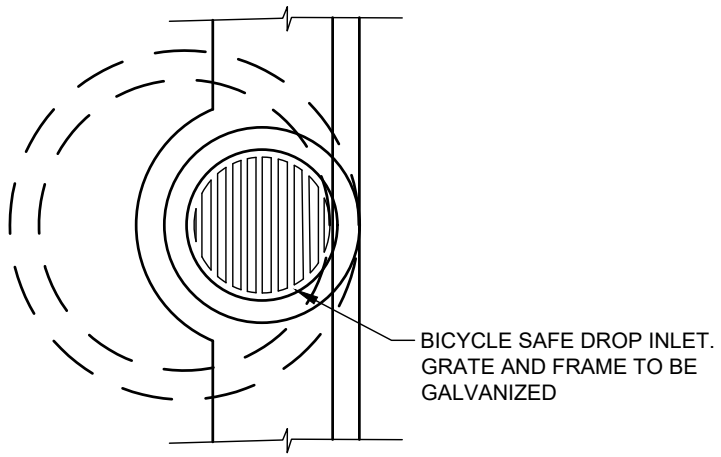

PLAN

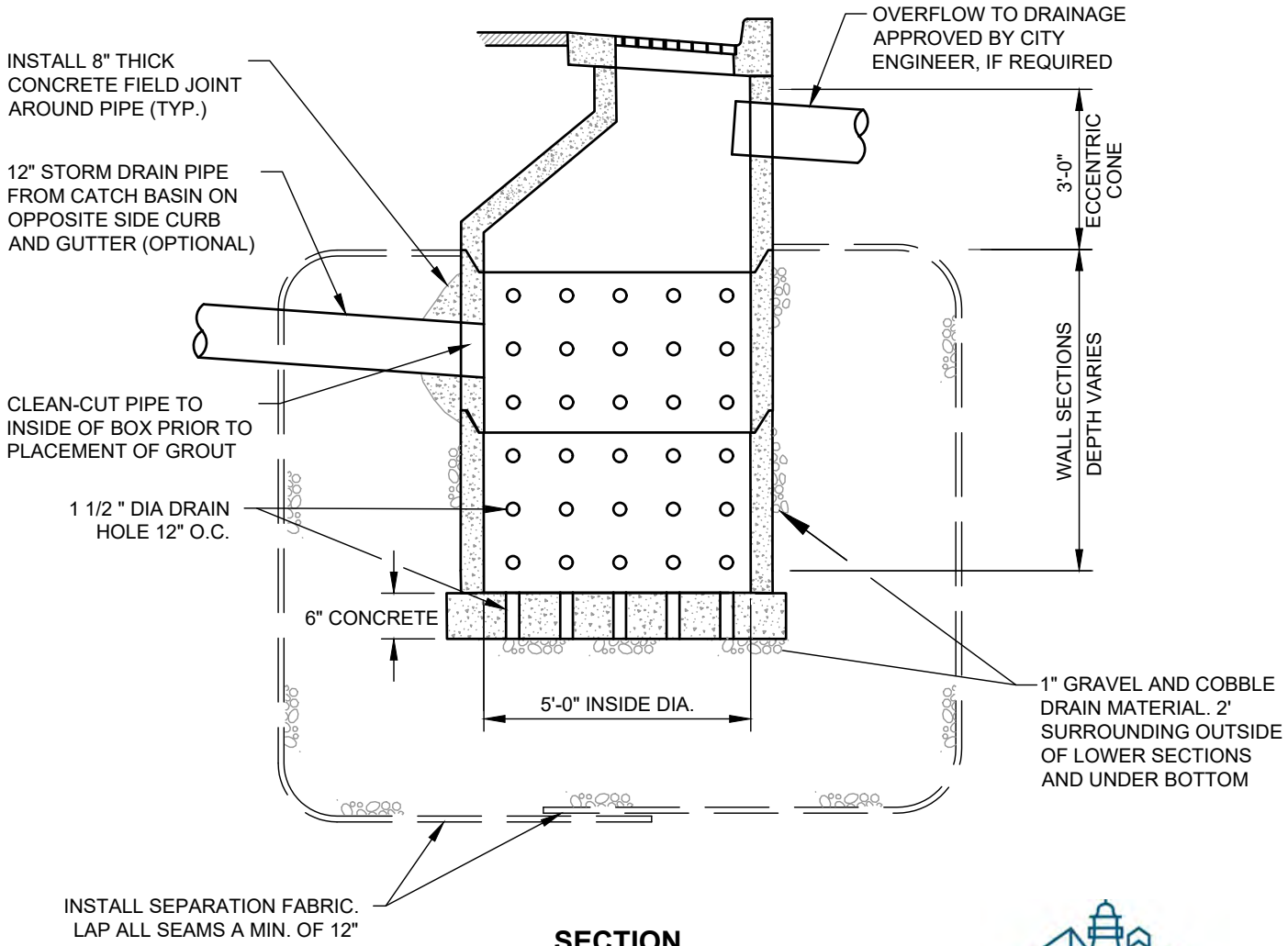

SECTION

NOTE:

1. ALTERNATIVE SUMP DESIGNS MAY BE REQUIRED DEPENDING ON GROUND WATER TABLE.

LEHI CITY

LEHI CITY STANDARD DETAIL	
STORM WATER SUMP	
SD-09	DATE: *JANUARY 20*

EXHIBIT B

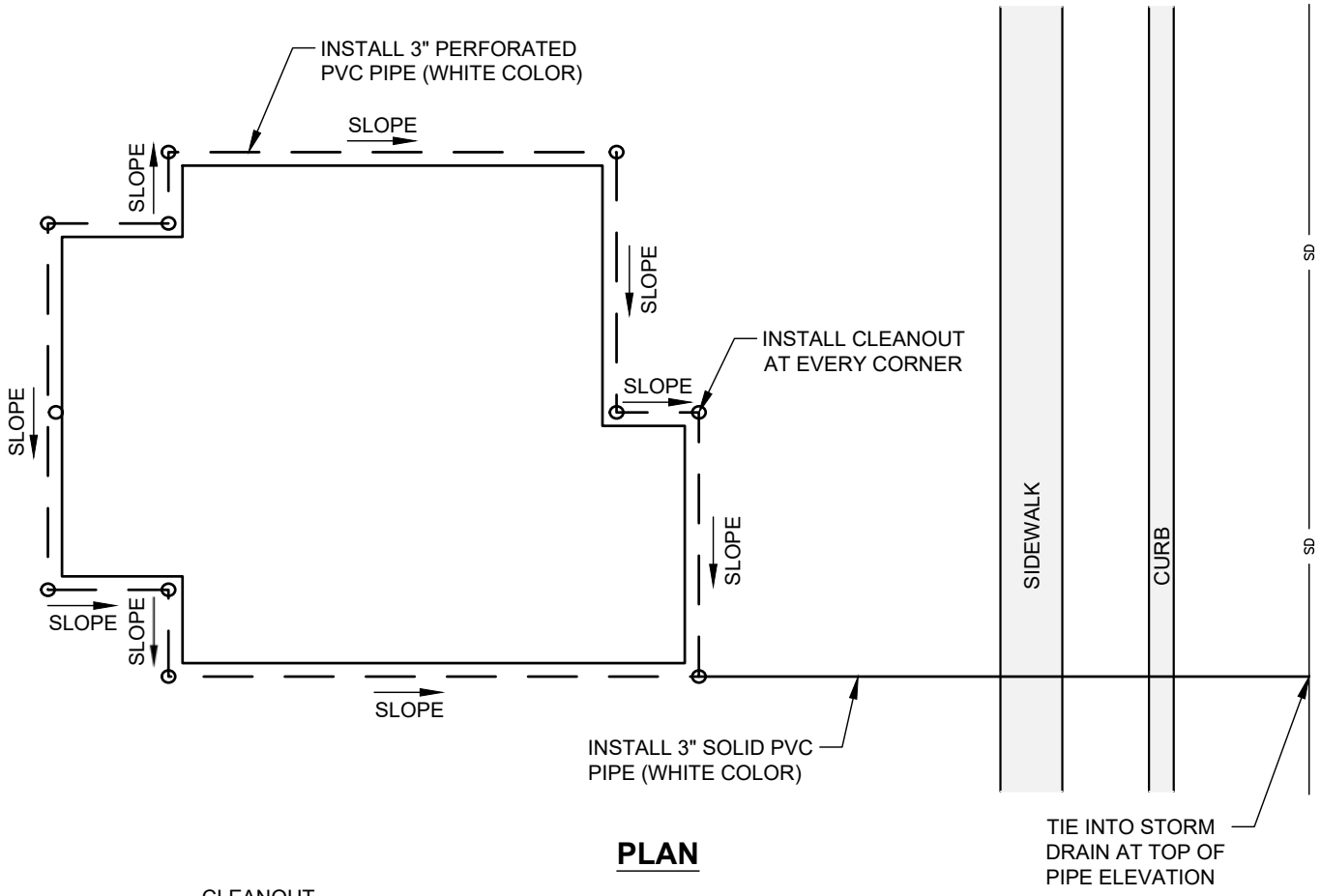

PLAN

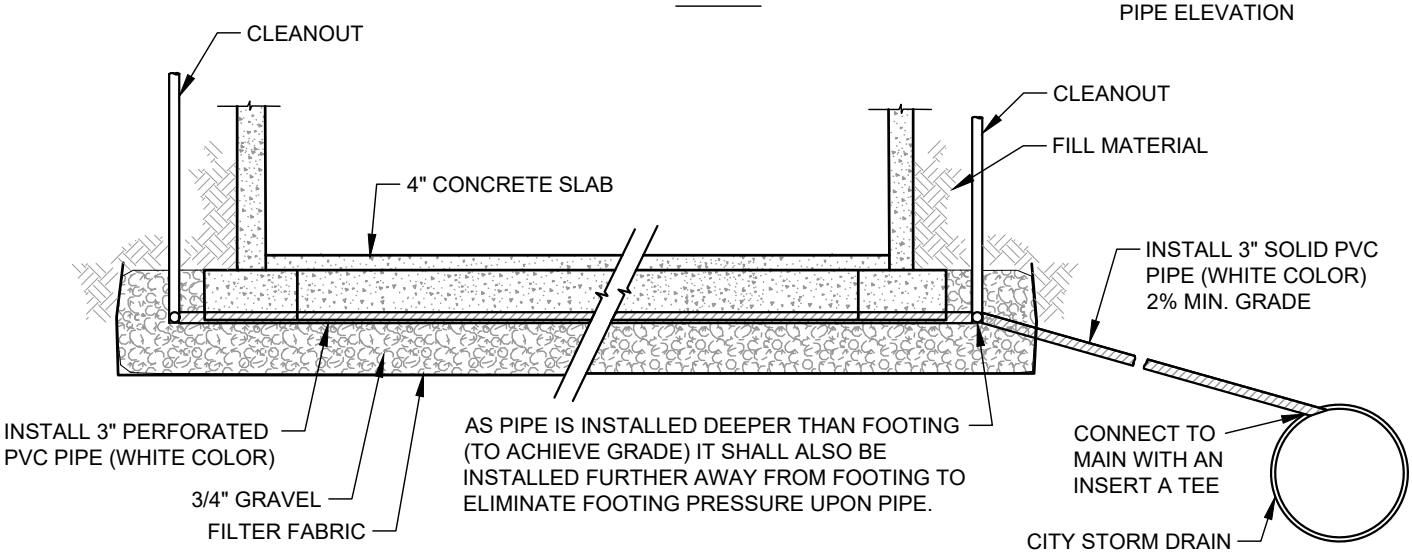

SECTION

NOTE:

1. SUBSURFACE DRAIN FIGURES SHOWN ABOVE ARE FOR REFERENCE ONLY. A SITE-SPECIFIC GEOTECHNICAL REPORT SHALL BE SUBMITTED SHOWING THE DEPTHS,SIZES, AND LOCATIONS OF ALL PROPOSED SUBSURFACE DRAINAGE PIPNG.

NOTE: ONLY ALLOWED AS AUTHORIZED OR DIRECTED BY THE STORM WATER SUPERINTENDENT AND BUILDING OFFICIAL

LEHI CITY

LEHI CITY STANDARD DETAIL	
BUILDING SUBSURFACE DRAINS	
SD-10	DATE: JANUARY 20[illegible]

EXHIBIT B

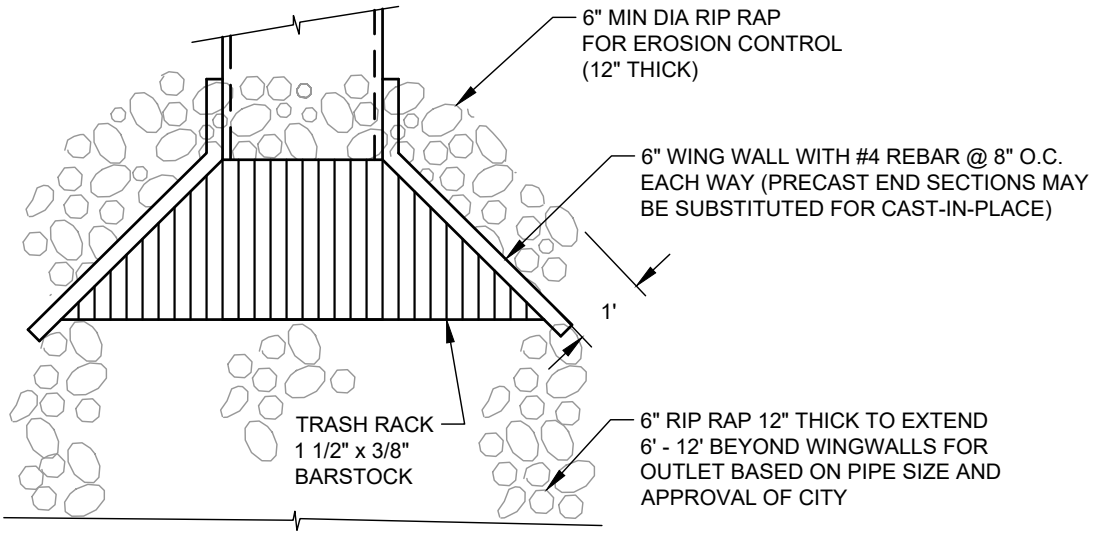

PLAN VIEW

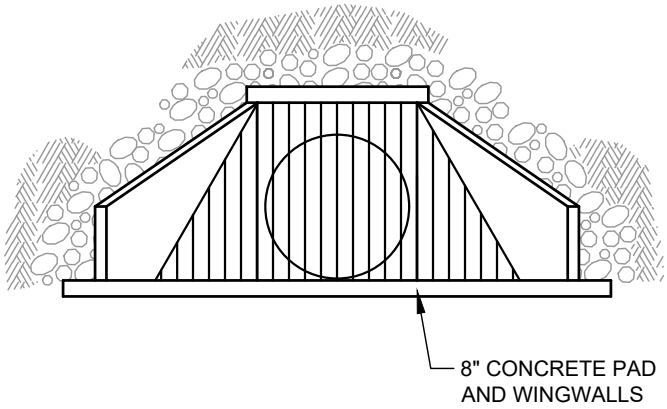

FRONT VIEW

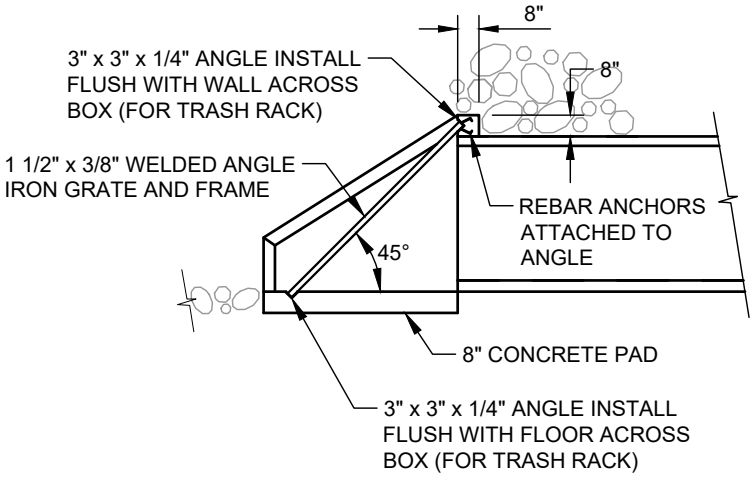

SECTION VIEW

NOTES:

1. USE TRASH RACK FOR INLETS ONLY, NOT REQUIRED ON OUTLETS.
2. OPENING BETWEEN THE BARS SHALL NOT EXCEED 2".
3. HYDRAULIC DESIN CALCULATIONS MAY BE REQUIRED FOR HEADWALL / RIP-RAP DESIGN APPROVALS.
4. HEADWALL, GRATING, RIP-RAP SIZING AND FLOW CALCULATIONS MUST BE APPROVED BY LEHI CITY ENGINEER PRIOR TO CONSTRUCTION.

LEHI CITY

LEHI CITY STANDARD DETAIL

HEADWALL DETAIL

SD-11

DATE: JANUARY 20

EXHIBIT B

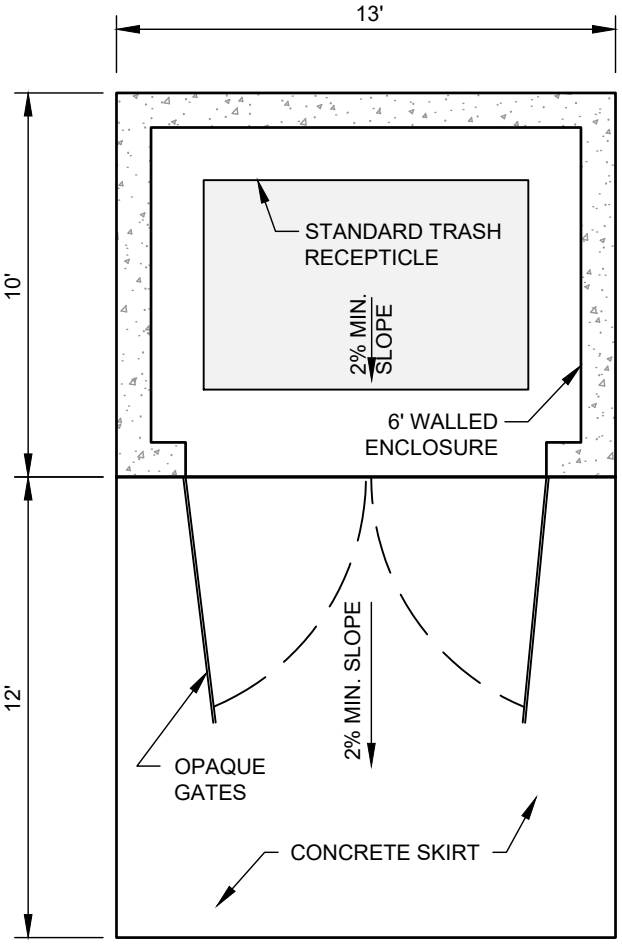

DUMPSTER

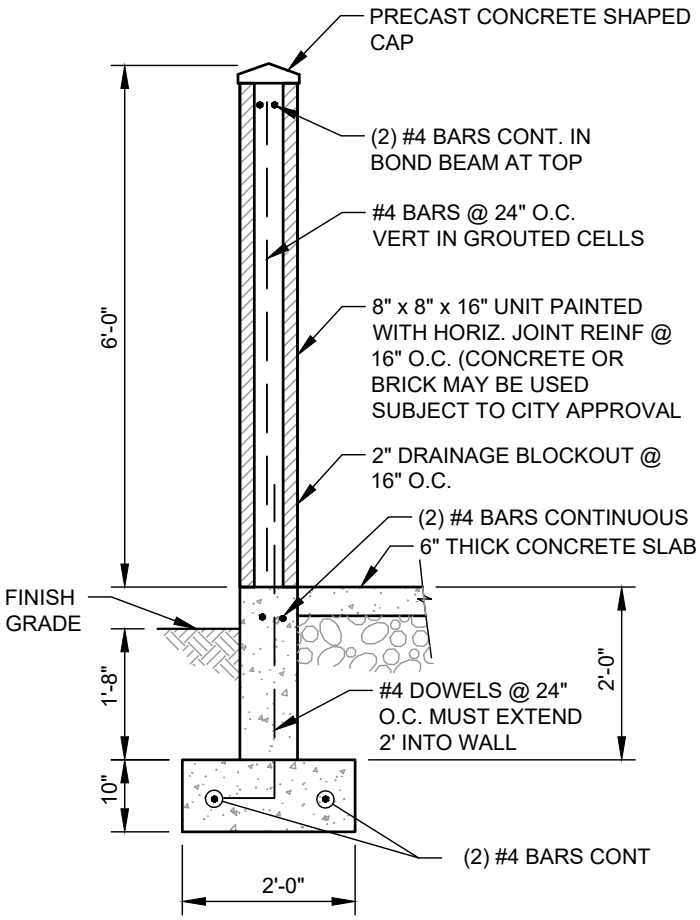

TRASH ENCLOSURE WALL DETAIL

NOTES

ALTERNATE DESIGNS MAY BE USED AS APPROVED BY THE BUILDING OFFICIAL

LEHI CITY

LEHI CITY STANDARD DETAIL

TRASH ENCLOSURE

TE-01

DATE: JANUARY 20

EXHIBIT B

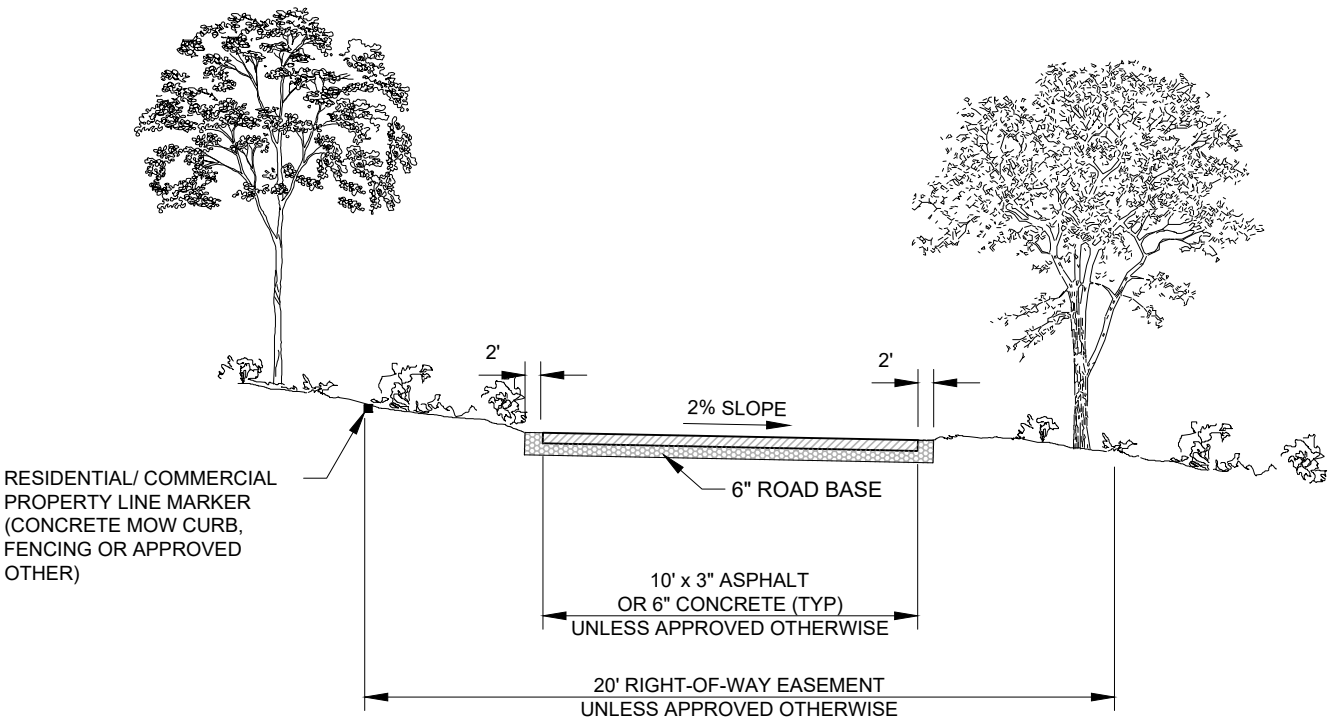

NOTES:

1. CROSS SECTION MAY BE ADJUSTED DEPENDING ON EXISTING CONSTRAINTS AS APPROVED BY THE LEHI CITY ENGINEER.

2. 2' COMPACTED SHOULDER MUST SLOPE AT A 6:1 MAX SLOPE ON EACH SIDE OF THE PAVED TRAIL.

3. SLOPE TRAIL 2% TO AVOID PONDING. PROVIDE DRAINAGE IMPROVEMENTS ALONG TRAIL AS REQUIRED TO CONVEY POSSIBLE STORM FLOWS.

4. CONTRACTOR SHALL REMOVE ALL FOLIAGE, ROOTS AND WASTE MATERIALS WITHIN A 12" ZONE BENEATH BASE COURSE. 12" ZONE SHALL THEN BE COMPACTED PRIOR TO THE PLACEMENT OF ROAD BASE COURSE. CONTRACTOR SHALL ALSO PLACE GROUND STERILANT PRIOR TO PLACEMENT OF ROAD BASE.

5. ALL PEDESTRIAN TRAIL DESIGN PLANS SHALL BE REVIEWED AND APPROVED BY LEHI CITY STAFF PRIOR TO CONSTRUCTON.

6. ADA AND PEDESTRIAN RAMPS SHALL BE CONCRETE AND MATCH THE WIDTH OF THE TRAIL.

7. DETECTABLE WARNING SURFACES SHALL EXTEND (24 IN) MINIMUM IN THE DIRECTION OF TRAVEL AND THE FULL WIDTH OF THE CURB RAMP (EXCLUSIVE OF FLARES), THE LANDING, OR THE BLENDED TRANSITION.

LEHI CITY

LEHI CITY STANDARD DETAIL

BICYCLE / PEDESTRIAN SHARED USE TRAIL

TR-01

DATE: *MAY 2024*

EXHIBIT B

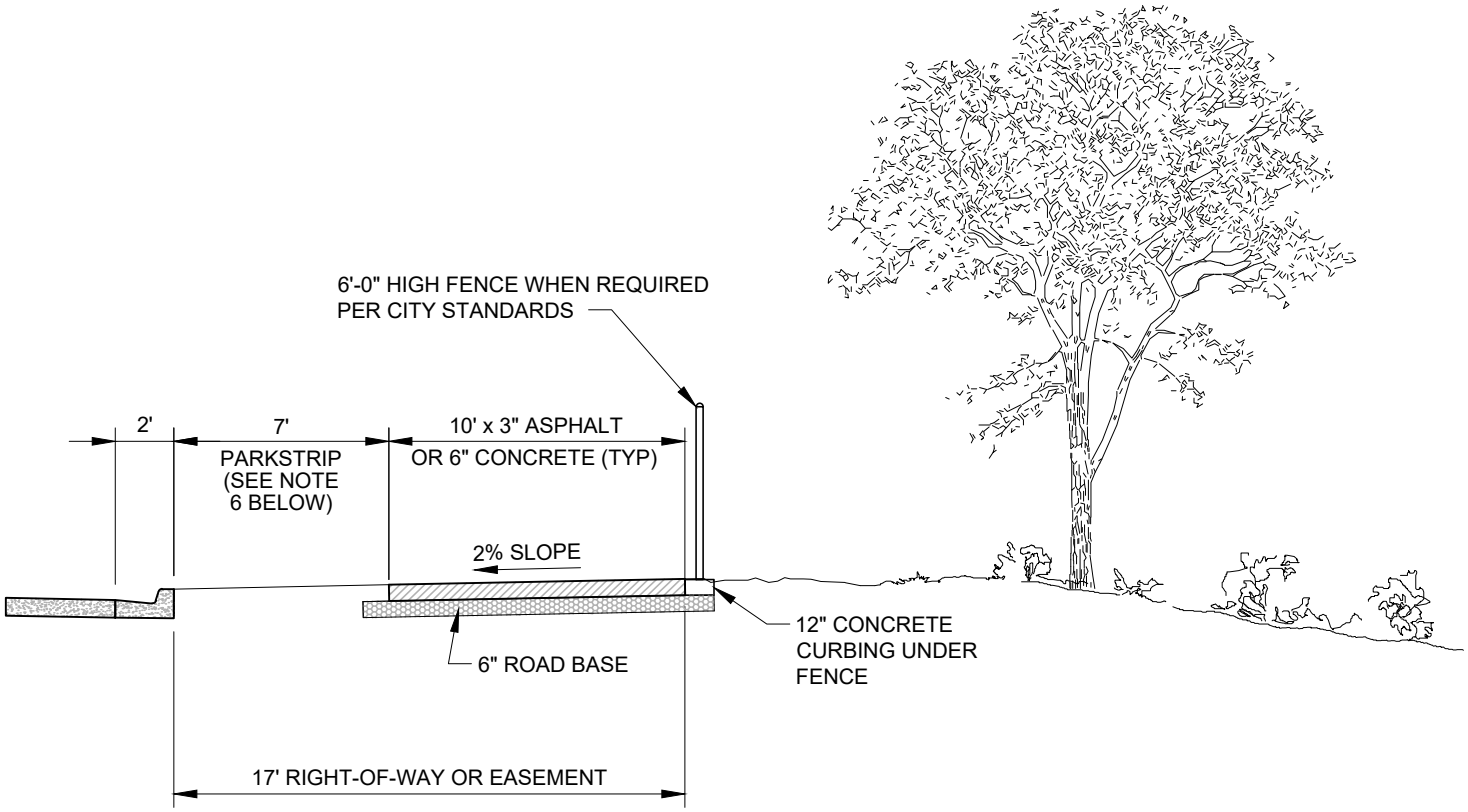

NOTES:

1. CROSS SECTION MAY BE ADJUSTED DEPENDING ON EXISTING CONSTRAINTS AS APPROVED BY THE LEHI CITY ENGINEER.

2. 2' COMPACTED SHOULDER MUST SLOPE AT A 6:1 MAX SLOPE ON EACH SIDE OF THE PAVED TRAIL.

3. SLOPE TRAIL 2% TO AVOID PONDING. PROVIDE DRAINAGE IMPROVEMENTS ALONG TRAIL AS REQUIRED TO CONVEY POSSIBLE STORM FLOWS.

4. CONTRACTOR SHALL REMOVE ALL FOLIAGE, ROOTS AND WASTE MATERIALS WITHIN A 12" ZONE BENEATH BASE COURSE. 12" ZONE SHALL THEN BE COMPACTED PRIOR TO THE PLACEMENT OF ROAD BASE COURSE. CONTRACTOR SHALL ALSO PLACE GROUND STERILANT PRIOR TO PLACEMENT OF ROAD BASE.

5. ALL PEDESTRIAN TRAIL DESIGN PLANS SHALL BE REVIEWED AND APPROVED BY LEHI CITY STAFF PRIOR TO CONSTRUCTON.

6. SEE SECTION 2 OF WRITTEN STANDARDS FOR GUIDELINES REGARDING RECOMMENDED PARK STRIP TREATMENTS.

7. WHERE APPLICABLE GATES WILL BE REQUIRED FOR UTILITY ACCESS.

LEHI CITY

LEHI CITY STANDARD DETAIL

BICYCLE / PEDESTRIAN SHARED USE TRAIL ALONG ARTERIAL ROAD

TR-02

DATE: *MAY 2024*

EXHIBIT B

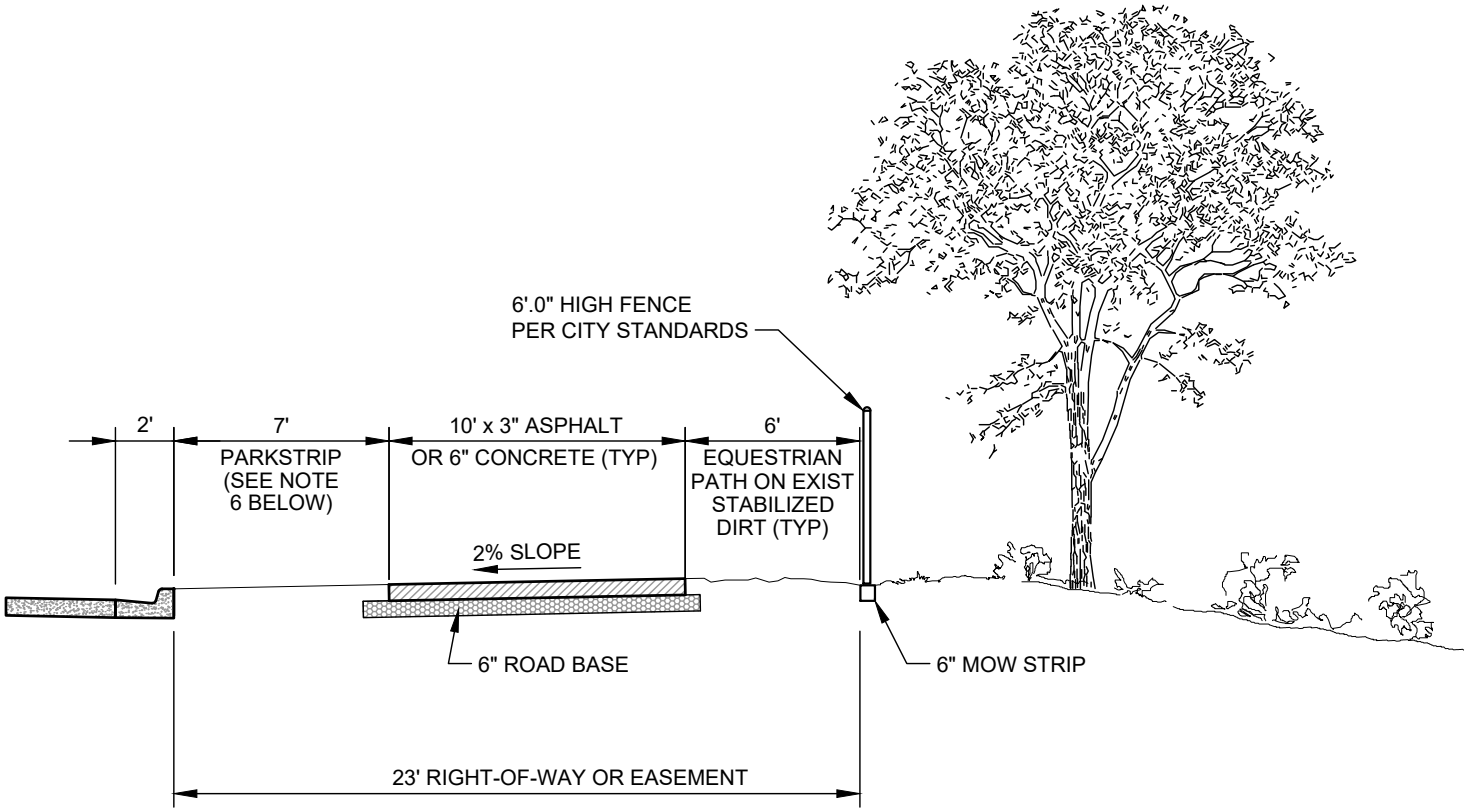

NOTES:

1. CROSS SECTION MAY BE ADJUSTED DEPENDING ON EXISTING CONSTRAINTS AS APPROVED BY THE LEHI CITY ENGINEER.

2. 2' COMPACTED SHOULDER MUST SLOPE AT A 6:1 MAX SLOPE ON EACH SIDE OF THE PAVED TRAIL.

3. SLOPE TRAIL 2% TO AVOID PONDING. PROVIDE DRAINAGE IMPROVEMENTS ALONG TRAIL AS REQUIRED TO CONVEY POSSIBLE STORM FLOWS.

4. CONTRACTOR SHALL REMOVE ALL FOLIAGE, ROOTS AND WASTE MATERIALS WITHIN A 12" ZONE BENEATH BASE COURSE. 12" ZONE SHALL THEN BE COMPACTED PRIOR TO THE PLACEMENT OF ROAD BASE COURSE. CONTRACTOR SHALL ALSO PLACE GROUND STERILANT PRIOR TO PLACEMENT OF ROAD BASE.

5. ALL PEDESTRIAN TRAIL DESIGN PLANS SHALL BE REVIEWED AND APPROVED BY LEHI CITY STAFF PRIOR TO CONSTRUCTON.

6. SEE SECTION 2 OF WRITTEN STANDARDS FOR GUIDELINES REGARDING RECOMMENDED PARK STRIP TREATMENTS.

LEHI CITY

LEHI CITY STANDARD DETAIL

BICYCLE / PEDESTRIAN & EQUESTRIAN SHARED USE TRAIL ALONG ARTERIAL ROAD

TR-03

DATE: *JANUARY 20*

EXHIBIT A

LEHI BETTERMENT FOR PI AND WATER RELOCATION: Ashton Blvd

LEGEND

- Lehi City Pay Item
- UDOT Pay Item
- Shared Pay Item
- General Note

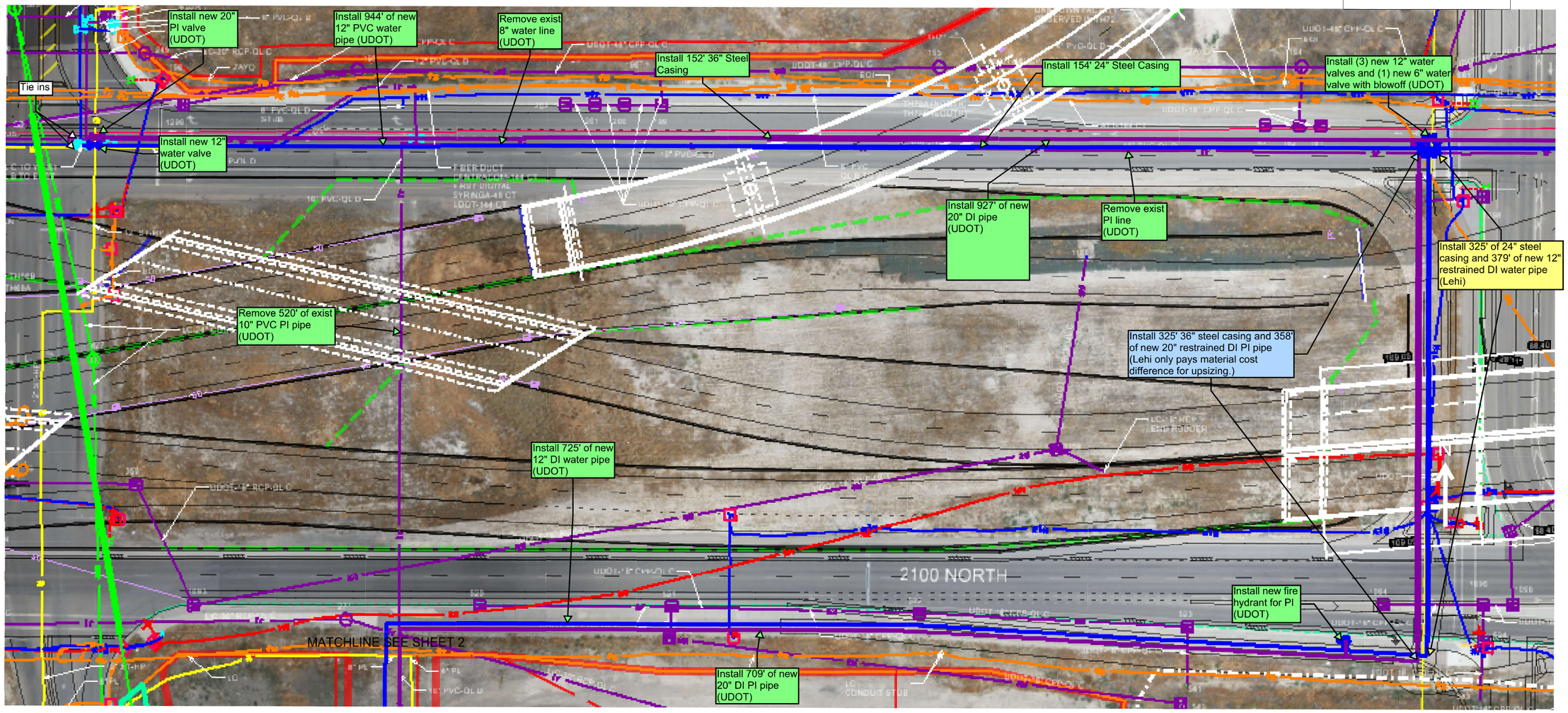

Sheet 1 of 3

Utah Department of Transportation
13420|SR-194; Lehi 2100 N Freeway
Utility Concept Plan
Prepared By: HNTB 2025-07-11

EXHIBIT A

LEHI BETTERMENT FOR PI AND WATER RELOCATION: Ashton Blvd

MATCHLINE SEE SHEET 1

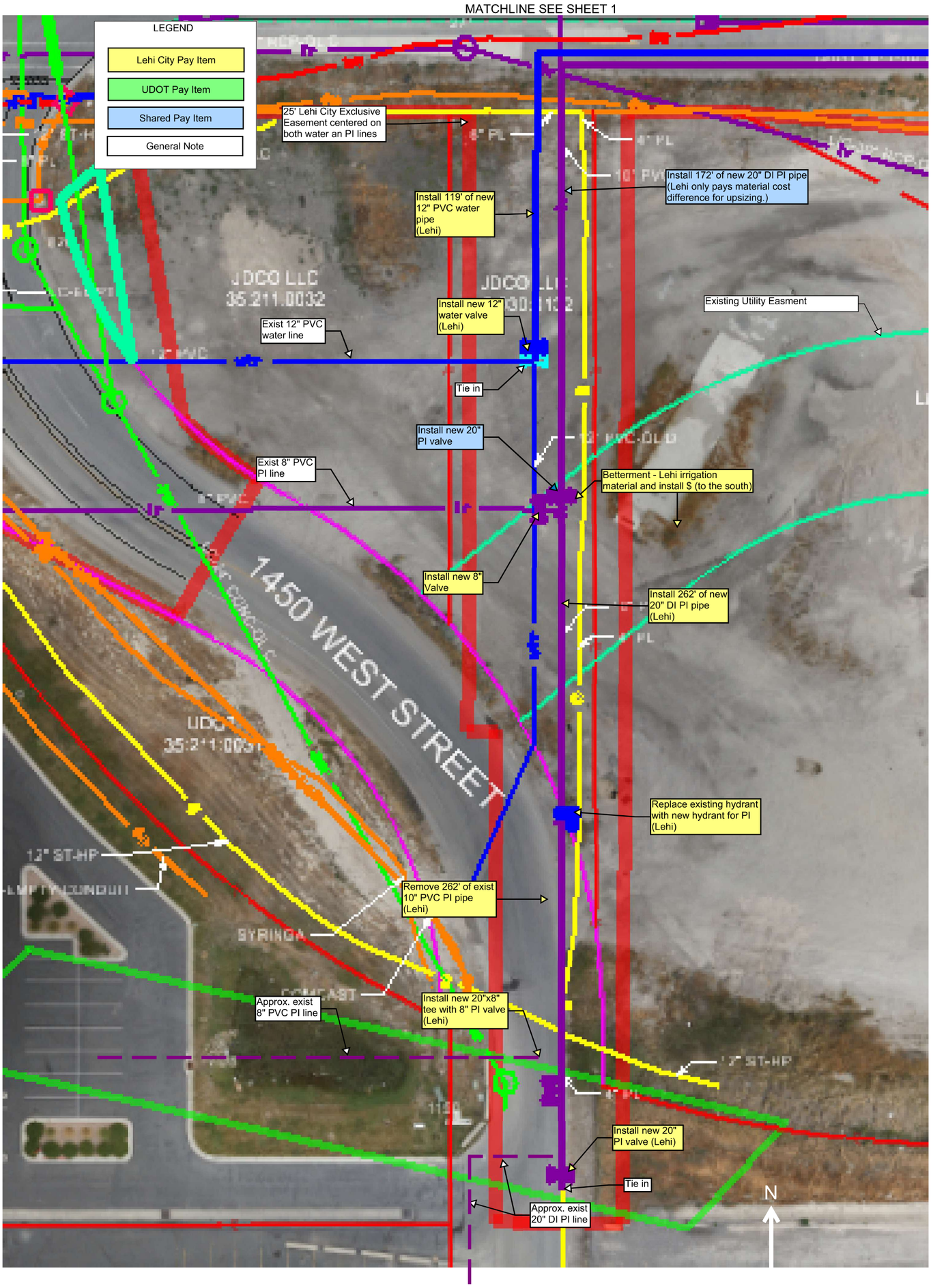

Sheet 2 of 3

Utah Department of Transportation
13420|SR-194; Lehi 2100 N Freeway
Utility Concept Plan
Prepared By: HNTB 2025-07-11

EXHIBIT A

LEHI BETTERMENT FOR PI AND WATER RELOCATION: Ashton Blvd

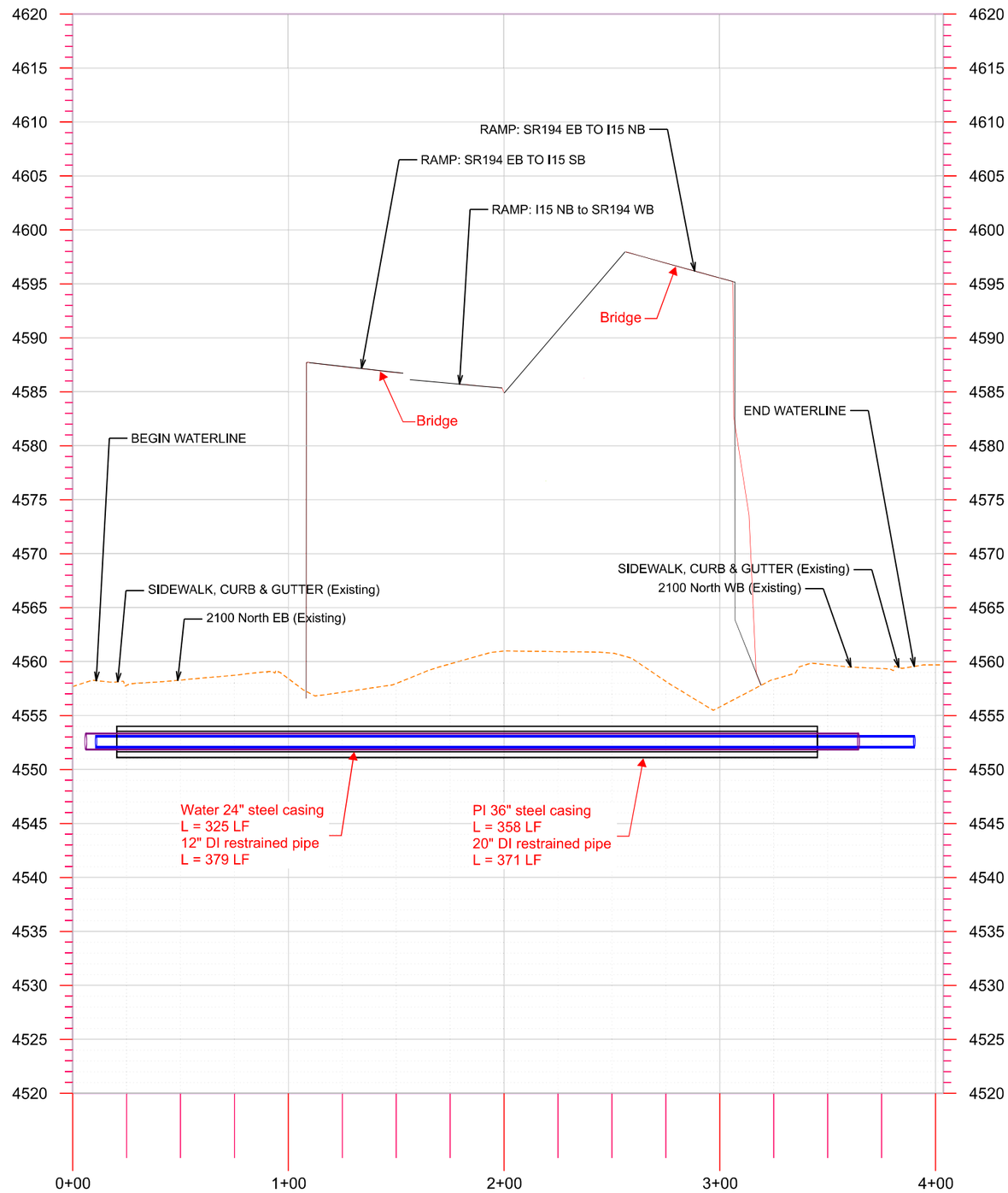

Sheet 3 of 3

Utah Department of Transportation
13420|SR-194; Lehi 2100 N Freeway
Utility Concept Section
Prepared By: HNTB 2025-07-01

EXHIBIT D

Project No. S-0194(6)0, Utah County
SR-194; Lehi 2100 N Freeway
Lehi City Water, Sewer, Irrigation, Storm Drain
Charge ID No. 74239 PIN 13420

LEHI CITY WATER, SEWER, IRRIGATION, STORM DRAIN
SUPPLEMENTAL AGREEMENT NO. ___

Supplement to UDOT Finance No. _____

THIS SUPPLEMENTAL AGREEMENT is made by and between the **Utah Department of Transportation**, ("UDOT"), and **Lehi City**, a Political Subdivision of the State of Utah, ("Third-Party"). Each as party, ("Party") and together as parties, ("Parties").

The Parties hereto entered into a Master Agreement (MA) dated _____, UDOT Finance No. _____. All the terms of the MA remain in full force and effect unless otherwise specified herein.

The Parties agree as follows:

1. UDOT will perform the following described Third-Party Work in accordance with the terms and conditions of the MA:

   a. Plan sheets depicting the Third-Party Work are shown in Exhibit "A" that is incorporated by reference and are described as:

   b. The Third-Party special provisions described in Paragraph 5 of the MA – Third-Party Requirements, are modified as follows:

   c. Third-Party Work will be completed between x and x. A schedule for the Third-Party Work is shown in Exhibit "B" that is incorporated by reference.

   d. As-builts to be provided in accordance with the MA.

2. UDOT will notify the Third-Party's contact person, Greg Allred, telephone number (385) 201-2425, and e-mail gallred@lehi.ut.gov at least **2 business days** in advance of beginning and completing its portion of the Third-Party Work covered herein.

3. Third-Party will notify UDOT's Field Representative, Name, telephone number (801) xxx-xxxx, and e-mail xxx@utah.gov, or their designated representative, as assigned at least **2 business days** in advance of beginning and completing its portion of the Third-Party Work covered herein. The Design-Builder Project Representative is Name, telephone number (801) xxx-xxxx, and e-mail xxx@xx.com.

4. The date of this Agreement is the date this Agreement is signed by the last Party.

Project No. S-0194(6)0, Utah County
SR-194; Lehi 2100 N Freeway
Lehi City Water, Sewer, Irrigation, Storm Drain
Charge ID No. 74239 PIN 13420

IN WITNESS WHEREOF, the Parties hereto have caused these presents to be executed by their duly authorized officers.

Lehi City

_____

Title: _____

Date: _____

. . . . . .

Recommended For Approval:

_____

Title: Utility and Railroad Leader

Date: _____

Utah Department of Transportation

_____

Title: Project Director

Date: _____

Comptroller's Office

_____

Title: Contract Administrator

Date: _____

Agenda Item No: 9

City Council Agenda Item Report

Meeting Date: July 22, 2025
Submitted By: Teisha WIlson
Submitting Department:
Item Type: Resolution
Agenda Section: Regular Agenda

Subject:
Consideration of Resolution #2025-51 approving a Supplemental Agreement with UDOT for water, sewer, irrigation, and storm drain improvements related to the 2100 N Project.

Suggested Action:

Attachments:

Res 2025-51.docx

13420_UTIL_LehiCityWater_IR_Agreement-from UDOT for Council.pdf

RESOLUTION NO. 2025-51

A RESOLUTION OF THE LEHI CITY COUNCIL APPROVING A SUPPLEMENTAL AGREEMENT WITH UDOT FOR THE CONSTRUCTION OF WATER AND PRESSURIZED IRRIGATION FACILITIES AS PART OF THE 2100 N. EXPANSION PROJECT

WHEREAS, UDOT and the City have entered into a Master Agreement for city-owned water, sewer, irrigation and storm drain facilities which may need to be relocated, protected, or adjusted as part of its 2100 North expansion project;

WHEREAS, the parties have identified specific water and pressurized irrigation work that will be required to be performed as part of the expansion of 2100 North;

WHEREAS, under this supplemental agreement UDOT is willing to incorporate the necessary work into its 2100 North expansion project and the City will pay the costs of said work;

WHEREAS, on July 22, 2025, the Lehi City Council held a duly-noticed public meeting to ascertain the facts regarding this matter, which facts and comments are found in the meeting record; and,

WHEREAS, after considering the facts and comments presented to the City Council, the Council finds: (i) that it should approve a Supplemental Agreement with UDOT for water and irrigation facilities; and (ii) such action furthers the health, safety and welfare of the citizens of Lehi.

NOW, THEREFORE, be it resolved by the City Council of Lehi City, Utah, as follows:

1. The Supplemental Agreement between Lehi City and UDOT attached hereto as Exhibit "A" is hereby approved and the Mayor is authorized to execute the Agreement and take all other such action as is necessary to make it effective.

2. This resolution shall take effect immediately.

Approved and Adopted by the City Council of Lehi City, Utah this 22nd day of July, 2025.

LEHI CITY ATTEST

_____ _____

Mark Johnson, Mayor

Teisha Wilson, City Recorder

EXHIBIT “A”

LEHI CITY WATER, SEWER, IRRIGATION, STORM DRAIN SUPPLEMENTAL AGREEMENT NO. ___

Supplement to UDOT Finance No. _____

THIS SUPPLEMENTAL AGREEMENT is made by and between the **Utah Department of Transportation**, ("UDOT"), and **Lehi City**, a Political Subdivision of the State of Utah, ("City"). Each as party, ("Party") and together as parties, ("Parties").

The Parties hereto entered into a Master Agreement (MA) dated _____, UDOT Finance No. _____. All the terms of the MA remain in full force and effect unless otherwise specified herein.

The Parties agree as follows:

1. UDOT will perform the following described Third-Party Work in accordance with the terms and conditions of the MA:

   Subject to the attached provisions, UDOT will include the following water and pressurized irrigation betterment work items into the above referenced Project and will oversee construction of the betterment work. Upon signing this Agreement, the City agrees that the costs shown below are estimates only and the City is responsible for paying all actual costs associated with these betterment items, based on Contract Unit Bid Prices, and actual quantities placed.

   UDOT will incorporate the new waterline and upsized irrigation line along 2100 North as a project cost due to project geometry. City is responsible for the new waterline and upsized irrigation line crossing of 2100 N and at 1450 West as a betterment. Details regarding cost share responsibilities are included in Exhibit "A" and incorporated by reference.

   Detailed Description of Betterment Work:

   a. Install new 12-inch waterline in 24-inch casing with appurtenances.
   b. Upsize pressurized irrigation from 10-inch to 20-inch in 36-inch steel casing with appurtenances.

   A plan view of the utility betterments is included in Exhibit "A".

   A Detailed Description of Betterment Cost is included in Exhibit "B" and incorporated by reference.

COST BREAKDOWN	
Total Estimated Cost of Irrigation Betterment Work	$300,630.00
Total Estimated Cost of Water Betterment Work	$197,088.00
Combined Total Estimated Cost of Betterment Work	**$497,718.00**
Total Estimated Amount of City Participation @ 100%	**$497,718.00**
Total Estimated Amount of UDOT Participation @ 0%	**$0.00**

The total estimated cost of the betterment work shall be deposited with UDOT by August 1, 2026. The City shall deposit the amount with UDOT's Comptroller's Office located at UDOT/Comptroller, 4501 South 2700 West, Box 141510, Salt Lake City 84119-1510.

In the event the actual betterment costs are higher, the City shall pay the additional amount required within 30 days of receiving an invoice from UDOT. In the event the actual betterment costs are lower, UDOT will refund the balance of the amount deposited within 30 days of determining the final cost of the betterment work. Traffic Control is a fixed cost that will not be adjusted with actual costs.

2. UDOT will notify the City's contact person, Greg Allred, telephone number (385) 201-2425, and e-mail gallred@lehi.ut.gov at least **2 business days** in advance of beginning and completing its portion of the Third-Party Work covered herein.

3. **Provisions (Note: the language in these provisions shall not be changed without prior approval from the Utah AG's office)**

The City desires to include the betterment work items described herein in the project contract work.

UDOT will include the City's requested betterment work in the project contract provided that the City pay the actual additional costs and UDOT's project will not be delayed because of the betterments. No betterments will be added to the bid package until this Agreement has been signed by both parties.

The City, at no cost to the Project, shall provide on-call support from City's Design Engineer or appropriate representative to correct or clarify issues during construction and to perform the necessary inspection for the City work installed by the contractor. The City engineer and / or inspector shall work with and through UDOT's Project Manager or Resident Engineer and shall give no orders directly to UDOT's contractor unless authorized in writing to do so. UDOT's contractor will accomplish the work covered herein on the City's facilities in accordance with the plans and specifications provided by the City, including changes or additions to the plans and specifications which are approved by the parties.

The City, through its inspection of the work, will provide UDOT's Project Manager or Resident Engineer with information covering any problems or concerns the City may have with acceptance of the facilities upon completion of construction.

Any periodic plan and specification review or construction inspection performed by UDOT arising out of the performance of the project does not relieve the City of its duty in the performance of this project

or to ensure compliance with acceptable standards.

Except in cases of emergency, access for maintenance and servicing of the City facilities located on UDOT's right-of-way will be by permit issued by UDOT to the City, and that the City will obtain the

permit and abide by the conditions thereof for policing and other controls in the conformance with Utah Administrative Rules.

a. **Indemnification:** UDOT and the City are both governmental entities subject to the Governmental Immunity Act. Each party agrees to indemnify, defend, and save harmless the other from and against all claims, suits and costs, including attorneys' fees for injury or damage of any kind, arising out of its negligent acts, errors or omissions of its officers, agents, contractors or employees in the performance of this agreement. Nothing in this paragraph is intended to create additional rights to third parties or to waive any of the provisions of the Governmental Immunity Act. The obligation to indemnify is limited to the dollar amounts set forth in the Governmental Immunity Act, provided the Act applies to the action or omission giving rise to the protections in this paragraph. The indemnification in this paragraph shall survive the expiration or termination of this Agreement.
b. **Termination:** This Agreement may be terminated as follows:
    i. By mutual agreement of the parties, in writing.
    ii. By either UDOT or the City for failure of the other party to fulfill their obligations as set forth in the provisions of this Agreement. Reasonable allowances will be made for circumstances beyond the control of the parties. Written notice of intent to terminate is required and shall specify the reasons for termination.
    iii. By UDOT for the convenience of the State upon written notice to the City.
    iv. Upon satisfactory completion of the provisions of this Agreement.
c. **Maintenance:** The City agrees that, upon completion and final inspection of the project construction, to accept, own and maintain the betterment work covered herein at no further cost to UDOT.
d. **Payment and Reimbursement to UDOT**: The City shall be responsible for all actual costs associated with these betterment items. The City agrees that if it modifies or cancels this Agreement at any time after it has been signed, the City agrees to pay any cancellation penalties or costs incurred by UDOT as a result of the betterment work scope being modified or cancelled. In the event the City fails to reimburse UDOT for the costs included in this Agreement, funding for other City projects or B&C road funds may be withheld until the entire payment is made.
e. **Change in Scope and Schedule**: The City recognizes that if its project scope or schedule changes from the terms of this Agreement, City will notify the UDOT Project Manager or Resident Engineer will be notified prior to changes being made. Any costs incurred by UDOT as a result of these scope or schedule changes will be the responsibility of the City. In the event there are changes in the scope of the work, extra work, or changes in the planned work covered by this Agreement, a signed written modification to this Agreement is required prior to the start of work on the changes or additions.
f. **Prohibition on Certain Telecommunications and Video Surveillance Services or Equipment:** All work of the City that relates to any agreement with UDOT is subject to Public Law 115-232, Sec. 889 and 2 CFR § 200.216 (the "Telecommunications Laws"). Among other things, the Telecommunications Laws prohibit the use of any sort of "covered

telecommunications" equipment or services, which are those provided by a company listed in such laws. The City shall at all times comply with the Telecommunications Laws. The City hereby certifies that it has read the Telecommunications Laws and consulted with legal counsel as needed. For all matters which are the subject of any agreement between the City and UDOT, the City hereby certifies that it currently conforms with, and will continue to conform with, the Telecommunications Laws in all respects. The City shall also place this certification in all UDOT-related contracts with subcontractors, consultants, and suppliers for UDOT's benefit. If any government entity having jurisdiction determines that the City or its associates is not in compliance with the Telecommunications Laws, the City agrees that it shall promptly notify UDOT of the same and remedy any deficiency.

g. **Miscellaneous:** This Agreement shall constitute the entire agreement and understanding of the parties with respect to the betterments, and shall supersede all offers, negotiations, and other agreements. Any amendment to this agreement must be in writing and executed by authorized representatives of each party. Each party agrees to undertake and perform all further acts that are reasonably necessary to carry out the intent and purpose of this agreement at the request of the other party. The failure of either party to insist upon strict compliance of any of the terms and conditions, or failure or delay by either party to exercise any rights or remedies provided in this Agreement, or by law, will not release either party from any obligations arising under this Agreement. This Agreement may be executed in counter parts by the parties. Each party represents that it has the authority to enter into this Agreement. Language content was reviewed and approved by the Utah AG's office on April 10, 2018.

4. The date of this Agreement is the date this Agreement is signed by the last Party.

IN WITNESS WHEREOF, the parties hereto have caused these presents to be executed by their duly authorized officers.

ATTEST:

_____

Title: _____

Date: _____

(IMPRESS SEAL)

Lehi City

_____

Title: _____

Date: _____

. . . . . .

Recommended For Approval:

_____

Title: Utility and Railroad Leader

Date: _____

Utah Department of Transportation

_____

Title: Project Director

Date: _____

Comptroller Office

_____

Title: Contract Administrator

Date: _____

EXHIBIT A

LEHI BETTERMENT FOR PI AND WATER RELOCATION: Ashton Blvd

LEGEND

- Lehi City Pay Item
- UDOT Pay Item
- Shared Pay Item
- General Note

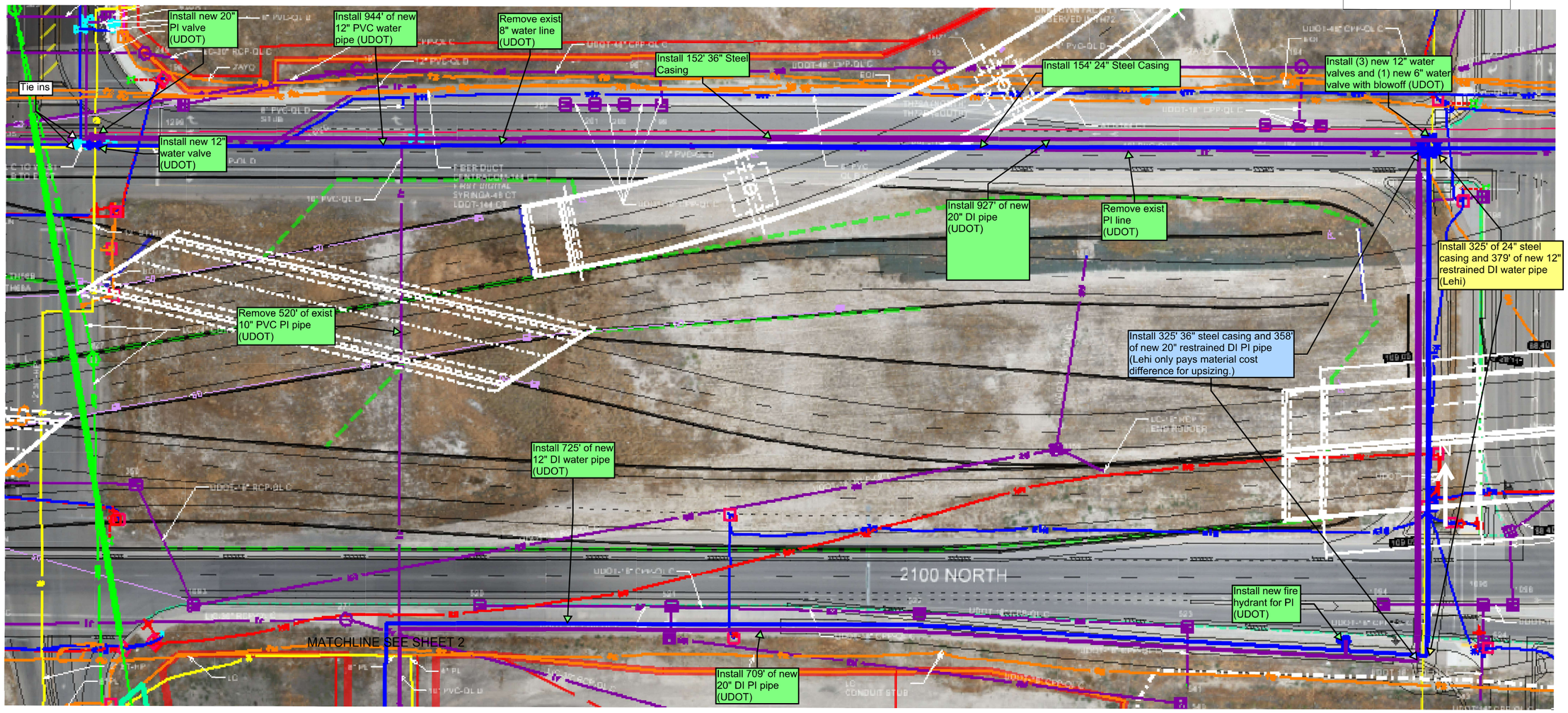

Sheet 1 of 3

Utah Department of Transportation
13420|SR-194; Lehi 2100 N Freeway
Utility Concept Plan
Prepared By: HNTB 2025-07-11

EXHIBIT A

LEHI BETTERMENT FOR PI AND WATER RELOCATION: Ashton Blvd

MATCHLINE SEE SHEET 1

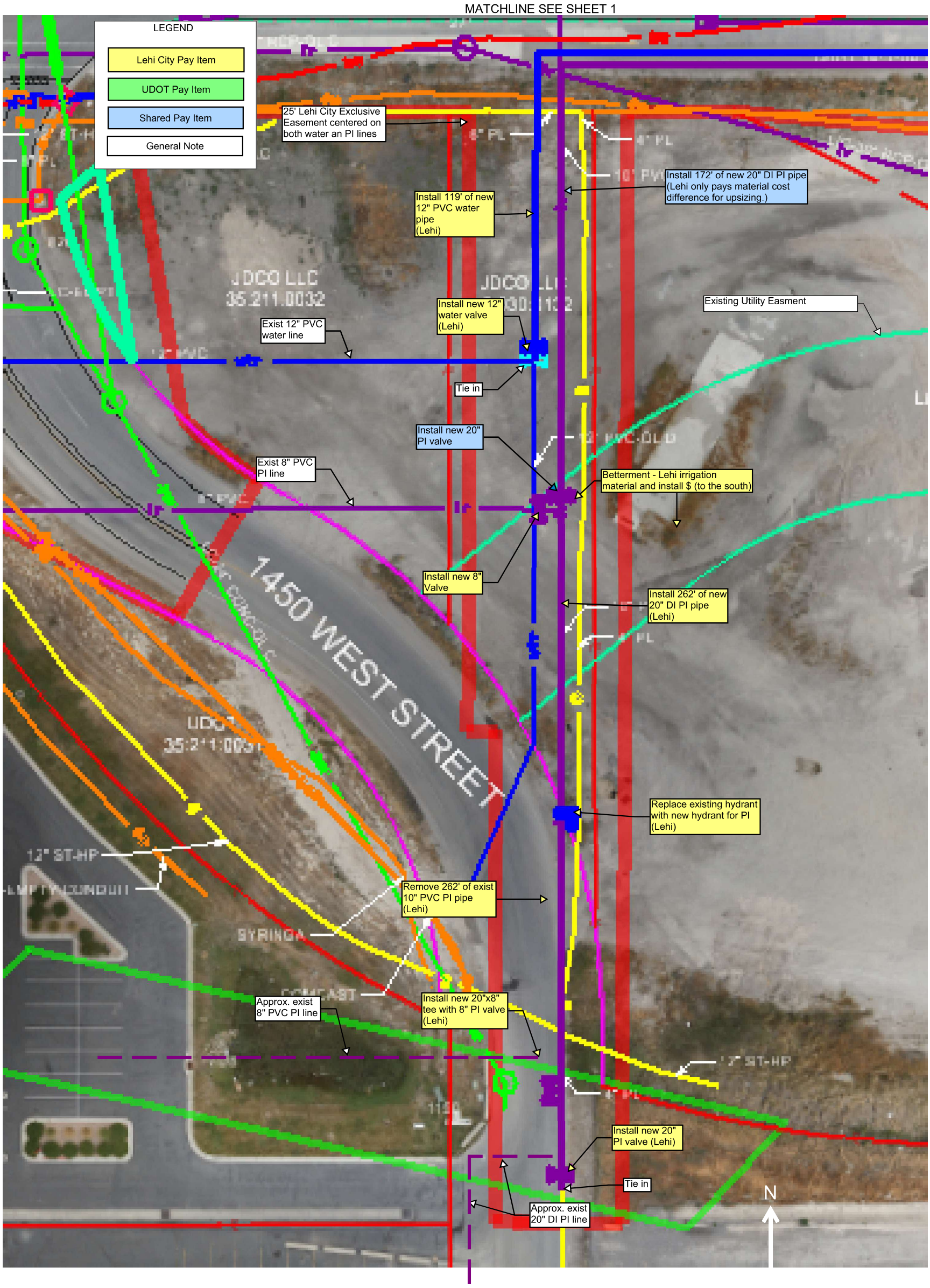

Sheet 2 of 3

Utah Department of Transportation
13420|SR-194; Lehi 2100 N Freeway
Utility Concept Plan
Prepared By: HNTB 2025-07-11

EXHIBIT A

LEHI BETTERMENT FOR PI AND WATER RELOCATION: Ashton Blvd

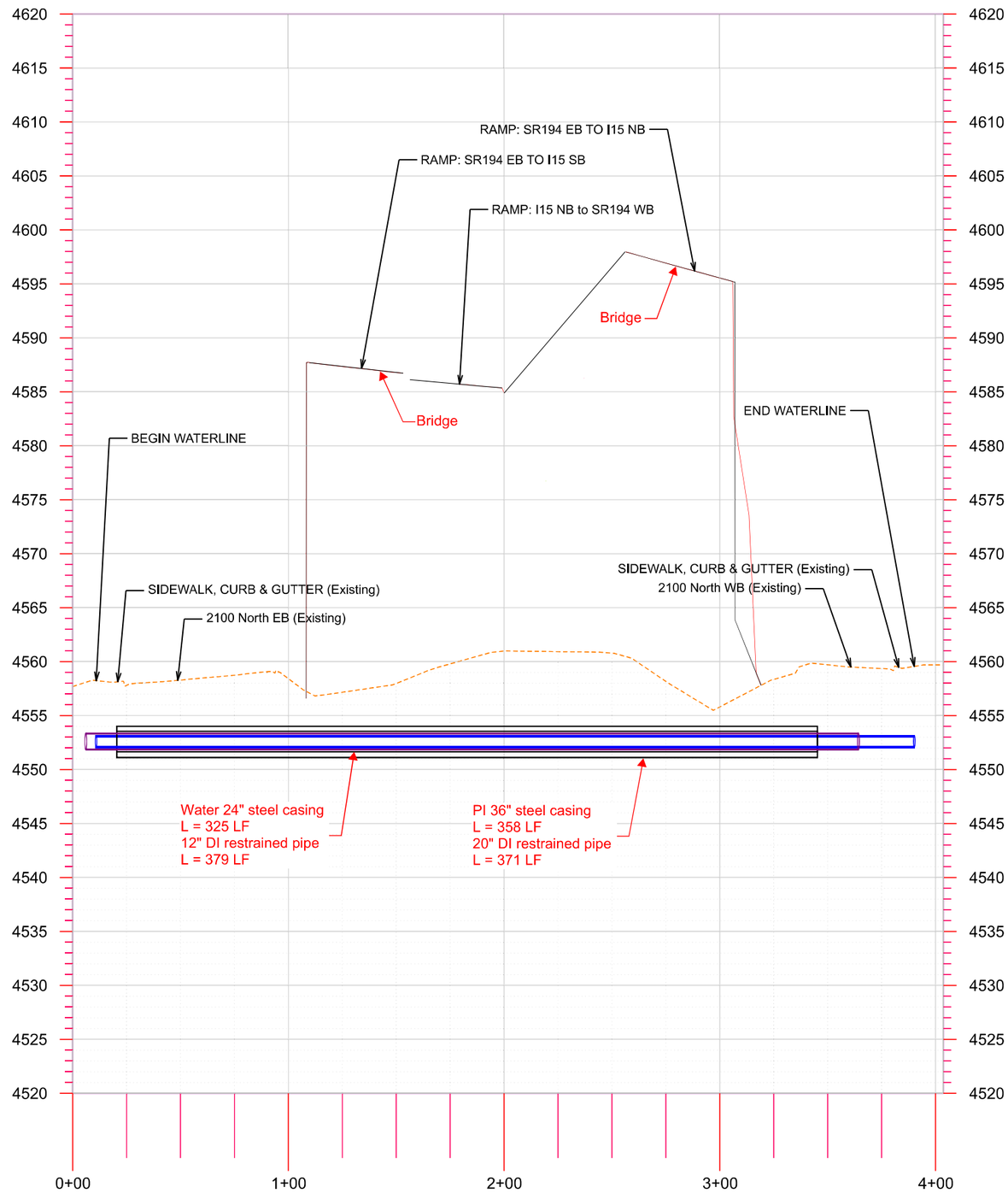

Sheet 3 of 3

Utah Department of Transportation
13420|SR-194; Lehi 2100 N Freeway
Utility Concept Section
Prepared By: HNTB 2025-07-01

Utah Department of Transportation

SR 194 | Lehi 2100 N

PIN: 13420 7/14/2025

ENGINEERS ESTIMATE

Lehi City Water and Irrigation Betterment

ITEM	DESCRIPTION	QUANTITY	UNIT	UNIT PRICE	TOTAL	LEHI COST
	Irrigation Betterment Items					
1	Remove Existing 10" PVC Irrigation Line - Betterment (Lehi)	262	LF	$94.00	$24,628	$24,628
2	20" DI Restrained Irrigation Line (Shared) (Materials Only)	358	LF	$370.00	$132,460	$132,460
2a	10" DI Restrained Irrigation Line (Non-bid)	358	LF	$197.00	$70,526	-$70,526
3	20" DI Irrigation Line (Shared) (Materials Only)	172	LF	$298.00	$51,256	$51,256
3a	10" DI Irrigation Line (Non-bid)	172	LF	$137.00	$23,564	-$23,564
4	20" DI Irrigation Line - (Shared)(Materials Only)	262	LF	$298.00	$78,076	$78,076
5	36" Steel Casing for Irrigation (Shared) (Materials Only)	325	LF	$274.00	$89,050	$89,050
5a	20" Steel Casing for 10" Irrigation LineNon (Non-bid)	325	LF	$186.00	$60,450	-$60,450
6	8" Gate Irrigation Valve and Tee - Betterment (Lehi) (Materials & Install)	2	EA	$3,000.00	$6,000	$6,000
7	20" Butterfly Irrigation Valve - Betterment (Lehi) (Materials & Install)	4	EA	$15,600.00	$62,400	$62,400
8	Irrigation Hydrant - Betterment (Lehi) (Materials & Install)	1	EA	$11,300.00	$11,300	$11,300
	Irrigation Subtotal					$300,630
	Water Betterment Items					
1	12" DI Restrained Water Line (Lehi) (Materials & Install)	379	LF	$197.00	$74,663	$74,663
2	24" Steel Casing for Water (Lehi) (Materials & Install)	325	LF	$253.00	$82,225	$82,225
3	12" Gate Water Valve (UDOT) (Materials & Install)	3	EA	$7,300.00	$21,900	$21,900
4	12" Gate Water Valve (Lehi) (Materials & Install)	2	EA	$7,300.00	$14,600	$14,600
5	6" Gate Water Valve with blowoff (UDOT) (Materials & Install)	1	EA	$3,700.00	$3,700	$3,700
	Water Subtotal					$197,088
	Total					**$497,718**

Agenda Item No: 10

City Council Agenda Item Report

Meeting Date: July 22, 2025
Submitted By: Teisha WIlson
Submitting Department:
Item Type: Resolution
Agenda Section: Regular Agenda

Subject:
Consideration of Resolution #2025-53 approving and Agreement with UDOT for the construction of an asphalt trail connection through Holbrook Part 2 from the Jordan River pedestrian bridge to Waterbury Drive.

Suggested Action:

Attachments:

Res 2025-53.docx

13420_Lehi City_Holbrook Trail Betterment_Agreement-from UDOT for Council.pdf

RESOLUTION NO. 2025-53

A RESOLUTION OF THE LEHI CITY COUNCIL APPROVING AN AGREEMENT WITH UDOT FOR THE CONSTRUCTION OF AN ASPHALT TRAIL CONNECTION THROUGH HOLBROOK PART 2 FROM THE JORDAN RIVER PEDESTRIAN BRIDGE TO WATERBURY DRIVE.

WHEREAS, Lehi City desires to contract for the Construction of an asphalt trail connection through Holbrook Park 2 from the Jordan River Pedestrian Bridge to Waterbury Drive; and

WHEREAS, Lehi City worked with UDOT as part of their project of betterment and road improvements on 2100 North in Lehi and in response to the requested work for the trail connection, Lehi City desires to contract with UDOT to perform the Work; and

WHEREAS, on July 22, 2025 the Lehi City Council held a duly-noticed public meeting to ascertain the facts regarding this matter, which facts and comments are found in the meeting record; and,

WHEREAS, after considering the facts and comments presented to the City Council, the Council finds: (i) that it should approve an Agreement with UDOT.; and (ii) such action furthers the health, safety and welfare of the citizens of Lehi.

NOW, THEREFORE, be it resolved by the City Council of Lehi City, Utah, as follows:

1. The Agreement between Lehi City and UDOT. attached hereto as Exhibit "A" is hereby approved and the Mayor is authorized to execute the Agreement and take all other such action as is necessary to make it effective.

2. This resolution shall take effect immediately.

Approved and Adopted by the City Council of Lehi City, Utah this 22nd day of July, 2025.

LEHI CITY

_____

Mark Johnson, Mayor

ATTEST

_____

Teisha Wilson, City Recorder

EXHIBIT “A”

Local Agency **Cost Estimate** **Betterment Agreement**	Betterment Description: Construct an asphalt trail connection through Holbrook Park 2 from the Jordan River Pedestrian Bridge to Waterbury Drive.	Estimated Cost for Betterment $179,357.21
PIN: 13420 FINET/CID: 74239	Project Number: S-0194(6)0 Project Name: SR-194; Lehi 2100 N Freeway	Agreement Number Date Executed

THIS AGREEMENT, made and entered into the date shown below, by and between the **Utah Department of Transportation**, ("**UDOT**"), and **Lehi City** a political subdivision of the State of Utah, ("**Local Agency**").

Subject to the attached provisions, UDOT will include the following betterment work items into the above referenced Project and will oversee construction of the betterment work. Upon signing this Agreement, the Local Agency agrees that the costs shown below are estimates only and the Local Agency is responsible for paying all actual costs associated with these betterment items, based on Contract Unit Bid Prices, and actual quantities placed.

Detailed Description of Betterment Work:

Construct an asphalt trail connection through Holbrook Park 2 from the Jordan River Pedestrian Bridge to Waterbury Drive as shown in "Exhibit A" and incorporated by reference.

Betterment Work costs are shown below. The Local Agency is responsible for 100% of the cost of the Betterment Work. The total estimated cost to the Local Agency is **$179,357.21**

Holbrook Park 2 Trail

Trail Extension through Holbrook Park #2				
	Quantity	**Unit**	**Unit Cost**	**Costs**
HMA (4")	281	tons	$126	$35,372.75
UTBC (8")	510	tons	$27	$13,763.46
Borrow	4823	cy	$27	$130,221.00
			Total:	$179,357.21

The total estimated cost of the betterment work shall be deposited with UDOT by August 1, 2026. The City shall deposit the amount with UDOT's Comptroller's Office located at UDOT/Comptroller, 4501 South 2700 West, Box 141510, Salt Lake City 84119-1510.

In the event the actual betterment costs are higher, the Local Agency shall pay the additional amount required within 30 days of receiving an invoice from UDOT. In the event the actual betterment costs are lower, UDOT will refund the balance of the amount deposited within 30 days of determining the final cost of the betterment work.

1. **Communication**. The Parties agree that as day-to-day maintenance or communication needs arise related to this Agreement, the following Party staff shall act as points of contact:

   For UDOT: Andrew Jordan
   Email: ajordan@utah.gov Phone Number: (801) 227-8000

   For Local Agency: Brad Kenison
   Email: bkenison@lehi-ut.gov Phone Number: (385) 201-2529

2. **General Terms**. The following terms apply to this Agreement:

   a. Any Party may give a written notice under this Agreement by delivering it to the following physical address (an email may be used in addition as a courtesy), and notice is effective upon delivery when delivered by hand or by overnight delivery service with confirmation of delivery (or, if placed in the U.S. mail, notice is effective three days after such notice receives a postmark):

To UDOT:	To Lehi City:
UDOT Region 3 658 North 1500 West Orem, UT 84057 Attention: Andrew Jordan With a copy to: Assistant Attorney General (UDOT) 4501 South 2700 West Salt Lake City, UT 84114-4855	Lehi City 153 North 100 East Lehi, UT 84043 Attention: Brad Kenison

Provisions
(Note: the language in these provisions shall not be changed without prior approval from the Utah AG's office)

The Local Agency desires to include the betterment work items described herein in the project contract work.

UDOT will include the Local Agency's requested betterment work in the project contract provided that the Local Agency pay the actual additional costs and UDOT's project will not be delayed because of the betterments. No betterments will be added to the bid package until this Agreement has been signed by both parties.

The Local Agency, at no cost to the Project, shall provide on-call support from Local Agency's Design Engineer or appropriate representative to correct or clarify issues during construction and to perform the necessary inspection for the Local Agency work installed by the contractor. The Local Agency engineer and / or inspector shall work with and through UDOT's Project Manager or Resident Engineer and shall give no orders directly to UDOT's contractor unless authorized in writing to do so. UDOT's contractor will accomplish the work covered herein on the Local Agency's facilities in accordance with the plans and specifications provided by the Local Agency, including changes or additions to the plans and specifications which are approved by the parties.

The Local Agency, through its inspection of the work, will provide UDOT's Project Manager or Resident Engineer with information covering any problems or concerns the Local Agency may have with acceptance of the facilities upon completion of construction.

Any periodic plan and specification review or construction inspection performed by UDOT arising out of the performance of the project does not relieve the Local Agency of its duty in the performance of this project or to ensure compliance with acceptable standards.

Except in cases of emergency, access for maintenance and servicing of the Local Agency facilities located on UDOT's right-of-way will be by permit issued by UDOT to the Local Agency, and that the Local Agency will obtain the permit and abide by the conditions thereof for policing and other controls in the conformance with Utah Administrative Rules.

I. Indemnification:

UDOT and the Local Agency are both governmental entities subject to the Governmental Immunity Act. Each party agrees to indemnify, defend, and save harmless the other from and against all claims, suits and costs, including attorneys' fees for injury or damage of any kind, arising out of its negligent acts, errors or omissions of its officers, agents, contractors or employees in the performance of this agreement. Nothing in this paragraph is intended to create additional rights to third parties or to waive any of the provisions of the Governmental Immunity Act. The obligation to indemnify is limited to the dollar amounts set forth in the Governmental Immunity Act, provided the Act applies to the action or omission giving rise to the protections in this paragraph. The indemnification in this paragraph shall survive the expiration or termination of this Agreement.

II. Termination:

This Agreement may be terminated as follows:

a. By mutual agreement of the parties, in writing.
b. By either UDOT or the Local Agency for failure of the other party to fulfill their obligations as set forth in the provisions of this Agreement. Reasonable allowances will be made for circumstances beyond the control of the parties. Written notice of intent to terminate is required and shall specify the reasons for termination.
c. By UDOT for the convenience of the State upon written notice to the Local Agency.
d. Upon satisfactory completion of the provisions of this Agreement.

III. Maintenance:

The Local Agency agrees that, upon completion and final inspection of the project construction, to accept, own and maintain the betterment work covered herein at no further cost to UDOT.

IV. Payment and Reimbursement to UDOT:

The Local Agency shall be responsible for all actual costs associated with these betterment items.

The Local Agency agrees that if it modifies or cancels this Agreement at any time after it has been signed, the Local Agency agrees to pay any cancellation penalties or costs incurred by UDOT as a result of the betterment work scope being modified or cancelled. In the event the Local Agency fails to reimburse UDOT for the costs included in this Agreement, funding for other Local Agency projects or B&C road funds may be withheld until the entire payment is made.

V. Change in Scope and Schedule:

The Local Agency recognizes that if its project scope or schedule changes from the terms of this Agreement, Local Agency will notify the UDOT Project Manager or Resident Engineer will be notified prior to changes being made. Any costs incurred by UDOT as a result of these scope or schedule changes will be the responsibility of the Local Agency.

In the event there are changes in the scope of the work, extra work, or changes in the planned work covered by this Agreement, a signed written modification to this Agreement is required prior to the start of work on the changes or additions.

VI. Prohibition on Certain Telecommunications and Video Surveillance Services or Equipment:

All work of the Company that relates to any agreement with UDOT is subject to Public Law 115-232, Sec. 889 and 2 CFR § 200.216 (the "Telecommunications Laws"). Among other things, the Telecommunications Laws prohibit the use of any sort of "covered telecommunications" equipment or services, which are those provided by a company listed in such laws. The Company shall at all times comply with the Telecommunications Laws. The Company hereby certifies that it has read the Telecommunications Laws and consulted with legal counsel as needed. For all matters which are the subject of any agreement between the Company and UDOT, the Company hereby certifies that it currently conforms with, and will continue to conform with, the Telecommunications Laws in all respects. The Company shall also place this certification in all UDOT-related contracts with subcontractors, consultants, and suppliers for UDOT's benefit. If any government entity having jurisdiction determines that the Company or its associates is not in compliance with the Telecommunications Laws, the Company agrees that it shall promptly notify UDOT of the same and remedy any deficiency.

VII. Miscellaneous:

This Agreement shall constitute the entire agreement and understanding of the parties with respect to the betterments, and shall supersede all offers, negotiations, and other agreements. Any amendment to this agreement must be in writing and executed by authorized representatives of each party.

Each party agrees to undertake and perform all further acts that are reasonably necessary to carry out the intent and purpose of this agreement at the request of the other party.

The failure of either party to insist upon strict compliance of any of the terms and conditions, or failure or delay by either party to exercise any rights or remedies provided in this Agreement, or by law, will not release either party from any obligations arising under this Agreement.

This Agreement may be executed in counter parts by the parties.

Each party represents that it has the authority to enter into this Agreement.

Language content was reviewed and approved by the Utah AG's office on April 10, 2018.

Lehi City			**Utah Department of Transportation**		
By		Date	By		Date
Title/Signature of Official			Project Director		
By		Date	By		Date
Title/Signature of additional official, if required			Region Director		
By		Date	By		Date
Title/Signature of additional official, if required			Comptroller's Office		

EXHIBIT A

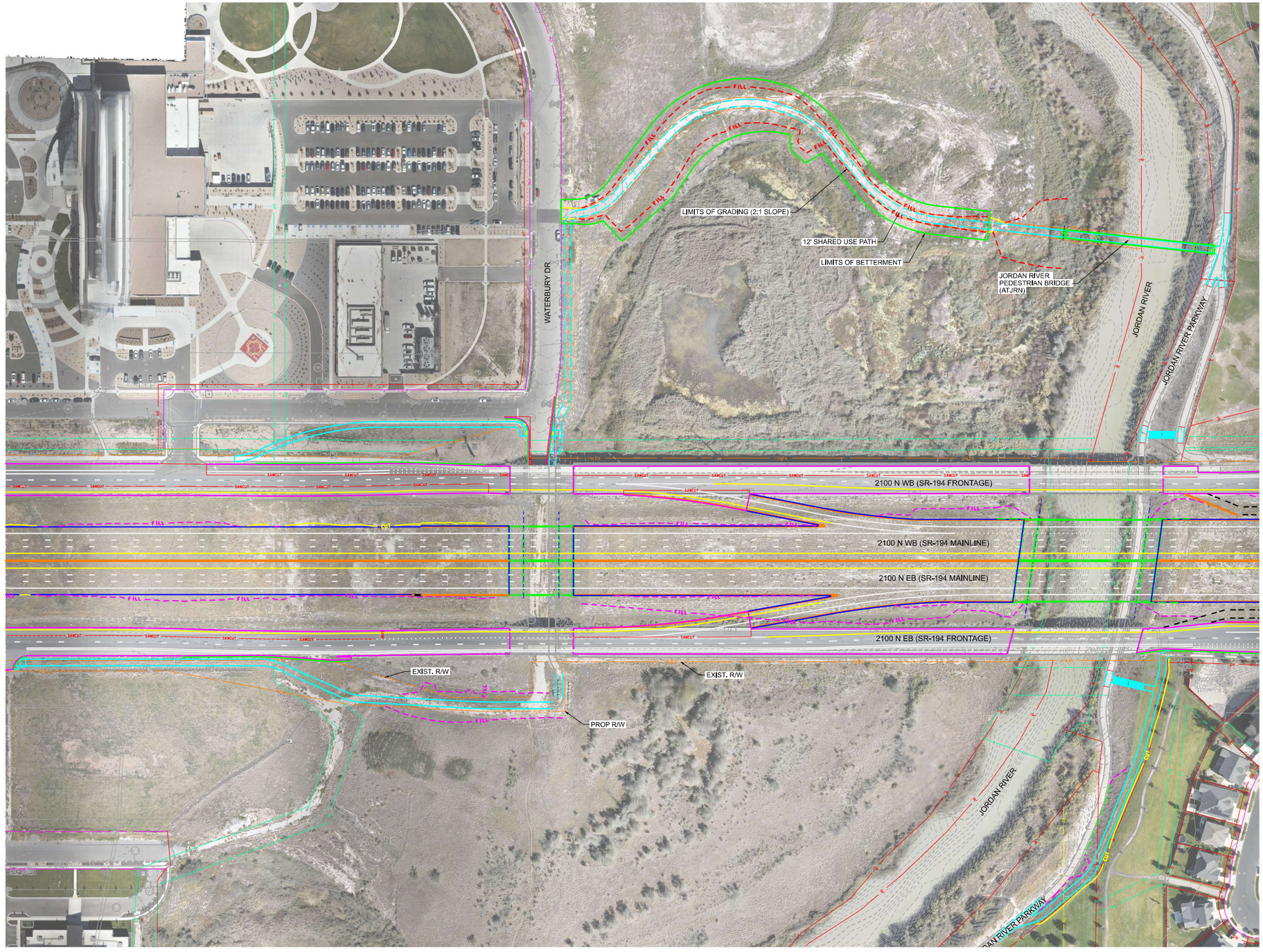

N

JORDAN RIVER PATH EXHIBIT

Agenda Item No: 11

City Council Agenda Item Report

Meeting Date: July 22, 2025
Submitted By: Teisha WIlson
Submitting Department:
Item Type: Resolution
Agenda Section: Regular Agenda

Subject:
Consideration of Resolution #2025-54 approving an agreement with UDOT for the construction of an access road connection from 2100 North and Thanksgiving Way to the park and ride lot.

Suggested Action:

Attachments:

Res 2025-54.docx

13420_Lehi City_ParkandRide_Agreement-from UDOT for Council.pdf

RESOLUTION NO. 2025-54

A RESOLUTION OF THE LEHI CITY COUNCIL APPROVING AN AGREEMENT WITH UDOT FOR THE CONSTRUCTION OF AN ACCESS ROAD CONNECTION FROM 2100 N. AND THANKSGIVING WAY TO THE PARK AND RIDE LOT.

WHEREAS, Lehi City desires to contract for the Construction of an access road connection from 2100 N. and Thanksgiving Way to the Park and Ride lot; and

WHEREAS, Lehi City worked with UDOT as part of their project of betterment and road improvements on 2100 North in Lehi and in response to the requested work for an access road connection from 2100 N. and Thanksgiving Way to the Park and Ride Lot; and

WHEREAS, on July 22, 2025 the Lehi City Council held a duly-noticed public meeting to ascertain the facts regarding this matter, which facts and comments are found in the meeting record; and,

WHEREAS, after considering the facts and comments presented to the City Council, the Council finds: (i) that it should approve an Agreement with UDOT; and (ii) such action furthers the health, safety and welfare of the citizens of Lehi.

NOW, THEREFORE, be it resolved by the City Council of Lehi City, Utah, as follows:

1. The Agreement between Lehi City and UDOT, attached hereto as Exhibit "A" is hereby approved and the Mayor is authorized to execute the Agreement and take all other such action as is necessary to make it effective.

2. This resolution shall take effect immediately.

Approved and Adopted by the City Council of Lehi City, Utah this 22nd day of July, 2025.

LEHI CITY | ATTEST

_____ | _____

Mark Johnson, Mayor | Teisha Wilson, City Recorder

EXHIBIT “A”

2100 North
Mountain View Corridor to I-15
CONSTRUCTION
A Northwest Utah County Project by UDOT

State of Utah
Department of Transportation

Local Agency **Cost Estimate** **Betterment Agreement**	Betterment Description: Access road connection from 2100 N. Thanksgiving Way to the Park and Ride lot and Hadco Development.	Estimated Cost for Betterment $403,990.40
PIN: 13420 FINET/CID: 74239	Project Number: S-0194(6)0 Project Name: SR-194; Lehi 2100 N Freeway	Agreement Number Date Executed

THIS AGREEMENT, made and entered into the date shown below, by and between the **Utah Department of Transportation**, ("**UDOT**"), and **Lehi City** a political subdivision of the State of Utah, ("**Local Agency**").

Subject to the attached provisions, UDOT will include the following betterment work items into the above referenced Project and will oversee construction of the betterment work. Upon signing this Agreement, the Local Agency agrees that the costs shown below are estimates only and the Local Agency is responsible for paying all actual costs associated with these betterment items, based on Contract Unit Bid Prices, and actual quantities placed.

Detailed Description of Betterment Work:
Construct an access road connection from 2100 N. and Thanksgiving Way to the Park and Ride lot and Hadco Development as shown in "Exhibit A" and incorporated by reference. Ensure new access road provides access to eastbound and westbound 2100 N. frontage roads.

Betterment Work costs are shown below. The Local Agency is responsible for 100% of the cost of the Betterment Work. The total estimated cost to the Local Agency is **$403,990.40.**

Park and Ride Betterment Cost Estimate				
	Quantity	**Unit**	**Unit Cost**	**Cost**
Roadway Excavation	2900	cu yd	$ 15.00	$ 43,500.00
Imported Borrow	600	cu yd	$ 25.00	$ 15,000.00
Granular Borrow	2071	Ton	$ 23.00	$ 47,633.00
UTBC (10")	1437	Ton	$ 27.00	$ 38,799.00
HMA (5")	771	Ton	$ 126.00	$ 97,146.00
SMA	154	Ton	$ 180.00	$ 27,720.00
Concrete Curb & Gutter Type B1	1204	ft	$ 42.00	$ 50,568.00
Concrete Sidewalk	662	sq ft	$ 10.00	$ 6,620.00
Ped Ramp	2	each	$ 5,000.00	$ 10,000.00
HMA (4", trail)	81	tons	$ 126.00	$ 10,206.00
UTBC (8", trail)	152	tons	$ 27.00	$ 4,104.00
			Subtotal:	$ 351,296.00
Civil (Miscellaneous)	15%			$ 52,694.40
			TOTAL:	**$ 403,990.40**

The total estimated cost of the betterment work shall be deposited with UDOT by August 1, 2026. The City shall deposit the amount with UDOT's Comptroller's Office located at UDOT/Comptroller, 4501 South 2700 West, Box 141510, Salt Lake City 84119-1510.

In the event the actual betterment costs are higher, the Local Agency shall pay the additional amount required within 30 days of receiving an invoice from UDOT. In the event the actual betterment costs are lower, UDOT will refund the balance of the amount deposited within 30 days of determining the final cost of the betterment work.

1. **Communication**. The Parties agree that as day-to-day maintenance or communication needs arise related to this Agreement, the following Party staff shall act as points of contact:

   For UDOT: Andrew Jordan
   Email: ajordan@utah.gov Phone Number: (801) 227-8000

   For Local Agency: Brad Kenison
   Email: bkenison@lehi-ut.gov Phone Number: (385) 201-2529

2. **General Terms**. The following terms apply to this Agreement:

   a. Any Party may give a written notice under this Agreement by delivering it to the following physical address (an email may be used in addition as a courtesy), and notice is effective upon delivery when delivered by hand or by overnight delivery service with confirmation of delivery (or, if placed in the U.S. mail, notice is effective three days after such notice receives a postmark):

To UDOT:	To Lehi City:
UDOT Region 3 658 North 1500 West Orem, UT 84057 Attention: Andrew Jordan With a copy to: Assistant Attorney General (UDOT) 4501 South 2700 West Salt Lake City, UT 84114-4855	Lehi City 153 North 100 East Lehi, UT 84043 Attention: Brad Kenison

Provisions
(Note: the language in these provisions shall not be changed without prior approval from the Utah AG's office)

The Local Agency desires to include the betterment work items described herein in the project contract work.

UDOT will include the Local Agency's requested betterment work in the project contract provided that the Local Agency pay the actual additional costs and UDOT's project will not be delayed because of the betterments. No betterments will be added to the bid package until this Agreement has been signed by both parties.

The Local Agency, at no cost to the Project, shall provide on-call support from Local Agency's Design Engineer or appropriate representative to correct or clarify issues during construction and to perform the necessary inspection for the Local Agency work installed by the contractor. The Local Agency engineer and / or inspector shall work with and through UDOT's Project Manager or Resident Engineer and shall give no orders directly to UDOT's contractor unless authorized in writing to do so. UDOT's contractor will accomplish the work covered herein on the Local Agency's facilities in accordance with the plans and specifications provided by the Local Agency, including changes or additions to the plans and specifications which are approved by the parties.

The Local Agency, through its inspection of the work, will provide UDOT's Project Manager or Resident Engineer with information covering any problems or concerns the Local Agency may have with acceptance of the facilities upon completion of construction.

Any periodic plan and specification review or construction inspection performed by UDOT arising out of the performance of the project does not relieve the Local Agency of its duty in the performance of this project or to ensure compliance with acceptable standards.

Except in cases of emergency, access for maintenance and servicing of the Local Agency facilities located on UDOT's right-of-way will be by permit issued by UDOT to the Local Agency, and that the Local Agency will obtain the permit and abide by the conditions thereof for policing and other controls in the conformance with Utah Administrative Rules.

I. Indemnification:

UDOT and the Local Agency are both governmental entities subject to the Governmental Immunity Act. Each party agrees to indemnify, defend, and save harmless the other from and against all claims, suits and costs, including attorneys' fees for injury or damage of any kind, arising out of its negligent acts, errors or omissions of its officers, agents, contractors or employees in the performance of this agreement. Nothing in this paragraph is intended to create additional rights to third parties or to waive any of the provisions of the Governmental Immunity Act. The obligation to indemnify is limited to the dollar amounts set forth in the Governmental Immunity Act, provided the Act applies to the action or omission giving rise to the protections in this paragraph. The indemnification in this paragraph shall survive the expiration or termination of this Agreement.

II. Termination:

This Agreement may be terminated as follows:

a. By mutual agreement of the parties, in writing.
b. By either UDOT or the Local Agency for failure of the other party to fulfill their obligations as set forth in the provisions of this Agreement. Reasonable allowances will be made for circumstances beyond the control of the parties. Written notice of intent to terminate is required and shall specify the reasons for termination.
c. By UDOT for the convenience of the State upon written notice to the Local Agency.
d. Upon satisfactory completion of the provisions of this Agreement.

III. Maintenance:

The Local Agency agrees that, upon completion and final inspection of the project construction, to accept, own and maintain the betterment work covered herein at no further cost to UDOT.

IV. Payment and Reimbursement to UDOT:

The Local Agency shall be responsible for all actual costs associated with these betterment items.

The Local Agency agrees that if it modifies or cancels this Agreement at any time after it has been signed, the Local Agency agrees to pay any cancellation penalties or costs incurred by UDOT as a result of the betterment work scope being modified or cancelled. In the event the Local Agency fails to reimburse UDOT for the costs included in this Agreement, funding for other Local Agency projects or B&C road funds may be withheld until the entire payment is made.

V. Change in Scope and Schedule:

The Local Agency recognizes that if its project scope or schedule changes from the terms of this Agreement, Local Agency will notify the UDOT Project Manager or Resident Engineer will be notified prior to changes being made. Any costs incurred by UDOT as a result of these scope or schedule changes will be the responsibility of the Local Agency.

In the event there are changes in the scope of the work, extra work, or changes in the planned work covered by this Agreement, a signed written modification to this Agreement is required prior to the start of work on the changes or additions.

VI. Prohibition on Certain Telecommunications and Video Surveillance Services or Equipment:

All work of the Company that relates to any agreement with UDOT is subject to Public Law 115-232, Sec. 889 and 2 CFR § 200.216 (the "Telecommunications Laws"). Among other things, the Telecommunications Laws prohibit the use of any sort of "covered telecommunications" equipment or services, which are those provided by a company listed in such laws. The Company shall at all times comply with the Telecommunications Laws. The Company hereby certifies that it has read the Telecommunications Laws and consulted with legal counsel as needed. For all matters which are the subject of any agreement between the Company and UDOT, the Company hereby certifies that it currently conforms with, and will continue to conform with, the Telecommunications Laws in all respects. The Company shall also place this certification in all UDOT-related contracts with subcontractors, consultants, and suppliers for UDOT's benefit. If any government entity having jurisdiction determines that the Company or its associates is not in compliance with the Telecommunications Laws, the Company agrees that it shall promptly notify UDOT of the same and remedy any deficiency.

VII. Miscellaneous:

This Agreement shall constitute the entire agreement and understanding of the parties with respect to the betterments, and shall supersede all offers, negotiations, and other agreements. Any amendment to this agreement must be in writing and executed by authorized representatives of each party.

Each party agrees to undertake and perform all further acts that are reasonably necessary to carry out the intent and purpose of this agreement at the request of the other party.

The failure of either party to insist upon strict compliance of any of the terms and conditions, or failure or delay by either party to exercise any rights or remedies provided in this Agreement, or by law, will not release either party from any obligations arising under this Agreement.

This Agreement may be executed in counter parts by the parties.

Each party represents that it has the authority to enter into this Agreement.

Language content was reviewed and approved by the Utah AG's office on April 10, 2018.

Lehi City			**Utah Department of Transportation**		
By		Date	By		Date
Title/Signature of Official			Project Director		
By		Date	By		Date
Title/Signature of additional official, if required			Region Director		
By		Date	By		Date
Title/Signature of additional official, if required			Comptroller's Office		

EXHIBIT A

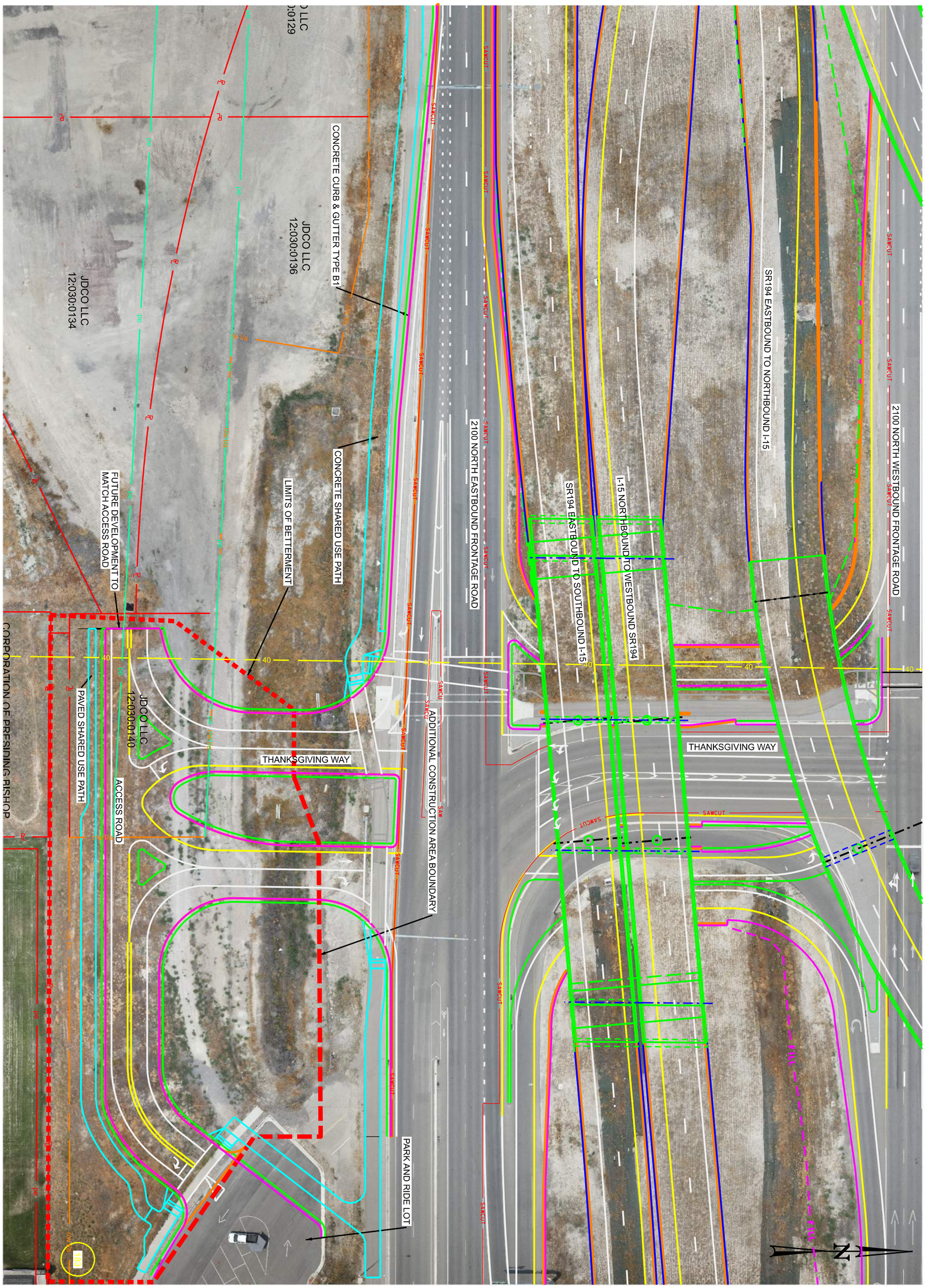

PROJECT	SR-194; LEHI 2100 N FREEWAY		
	HADCO ACCESS ROAD		
PROJECT NUMBER	S-0194(6)0	PIN	13420
EXHIBIT: ADDITIONAL CONSTRUCTION AREA			

UTAH DEPARTMENT OF TRANSPORTATION

HNTB

APPROVED

PROFESSIONAL ENGINEER

XX/XX/XXXX
DATE

DRAWN BY

QC CHECKED BY SJA

REVISIONS

NO.	DATE	APPROVED BY	REMARKS
6			
5			
4			
3			
2			
1			

SHEET NO. 196

Agenda Item No: 12

City Council Agenda Item Report

Meeting Date: July 22, 2025
Submitted By: Teisha WIlson
Submitting Department:
Item Type: Resolution
Agenda Section: Regular Agenda

Subject:
Consideration of Resolution #2025-52 appointing a Member to the Board of Trustees of the Metropolitan Water District of Lehi.

Suggested Action:

Attachments:

Res 2025-52.docx

RESOLUTION NO. 2025-52

A RESOLUTION OF THE LEHI CITY COUNCIL APPOINTING A MEMBER TO THE BOARD OF TRUSTEES OF THE METROPOLITAN WATER DISTRICT OF LEHI.

WHEREAS, Utah State Code 17B-1-303 and 17B-2a-604 outline the terms and qualifications for the Metropolitan Water District Board of Trustees; and

WHEREAS, Section 17B-2a-604(5)(a) prohibits elected or appointed officials of the appointing municipality from serving as Board Trustees, except for the officer with responsibility over the municipality's water supply and distribution system; and

WHEREAS, Lorin Powell has resigned as a Board Member, creating a vacant position that needs to be filled; and

WHEREAS, the Mayor of Lehi City wishes to appoint, with the advice and consent of the City Council, the following individual to the Metropolitan Water District of Lehi.

NOW, THEREFORE, BE IT RESOLVED BY THE CITY COUNCIL OF LEHI, UTAH, as follows:

1. Appoint Brad Kenison as a Trustee to replace Lorin Powell. Mr. Kenison's term shall begin immediately and will remain effective until replaced.

2. The provisions of this resolution shall take effect immediately upon passage.

PASSED and APPROVED this 22nd day of July, 2025.

LEHI CITY	ATTEST
_____	_____
Mark Johnson, Mayor	Teisha Wilson, City Recorder

Agenda Item No: 13

City Council Agenda Item Report

Meeting Date: July 22, 2025
Submitted By: Teisha WIlson
Submitting Department:
Item Type: Resolution
Agenda Section: Regular Agenda

Subject:
Consideration of Resolution #2025-55 approving the American Fork-Dry Creek Watershed Agreement with the Natural Resources Conservation Service, U.S. Department of Agriculture.

Suggested Action:

Attachments:

Res 2025-55.docx

AF-Dry Creek Watershed Agreement Clean Copy.pdf

RESOLUTION NO. 2025-55

A RESOLUTION OF THE LEHI CITY COUNCIL APPROVING AN AGREEMENT WITH AMERICAN FORK CITY, SARATOGA SPRINGS CITY ("SPONSORS") AND THE NATURAL RESOURCES CONSERVATION SERVICE ("NRCS") FOR THE AMERICAN FORK-DRY CREEK WATERSHED

WHEREAS, the Secretary of Agriculture through the NRCS has agreed on a Watershed Plan and the works of improvement for the American Fork-Dry Creed Watershed;

WHEREAS, the NRCS will fund the construction and engineering costs for the installation, operation, and maintenance of the facilities necessary to implement the Watershed Plan;

WHEREAS, the Sponsors will fund any real property acquisition necessary to implement the Watershed Plan;

WHEREAS, on July 22, 2025, the Lehi City Council held a duly-noticed public meeting to ascertain the facts regarding this matter, which facts and comments are found in the meeting record; and,

WHEREAS, after considering the facts and comments presented to the City Council, the Council finds: (i) that it should approve a Watershed Agreement; and (ii) such action furthers the health, safety and welfare of the citizens of Lehi.

NOW, THEREFORE, be it resolved by the City Council of Lehi City, Utah, as follows:

1. The Watershed Agreement between Lehi City and the NRCS attached hereto as Exhibit "A" is hereby approved and the Mayor is authorized to execute the Agreement and take all other such action as is necessary to make it effective.

2. This resolution shall take effect immediately.

Approved and Adopted by the City Council of Lehi City, Utah this 22nd day of July, 2025.

LEHI CITY

_____

Mark Johnson, Mayor

ATTEST

_____

Teisha Wilson, City Recorder

EXHIBIT “A”

AMERICAN FORK-DRY CREEK WATERSHED

WATERSHED AGREEMENT
between

American Fork City, Lehi City, and Saratoga Springs City
(Referred to herein as sponsors)

and the

Natural Resources Conservation Service,
U.S. Department of Agriculture
(Referred to herein as NRCS)

Whereas, the Watershed Work Plan Agreement for the American Fork-Dry Creek Watershed, State of Utah, executed by the Sponsoring Local Organization named therein and the Natural Resources Conservation Service (referred to herein as NRCS and previously known as the Soil Conservation Service "Service") became effective on the 21st day of May 1959; and

Whereas the Supplemental Watershed Work Plan Agreement No. 1 for the American Fork-Dry Creek Watershed, State of Utah, executed by the Sponsoring Local Organization named therein and the Service, became effective on the 11th day of September 1959; and

Whereas the Supplemental Watershed Work Plan Agreement No. 2 for the American Fork-Dry Creek Watershed, State of Utah, executed by the Sponsoring Local Organization named therein and the Service, became effective on the 13th day of October 1960; and

Whereas the Supplemental Watershed Work Plan Agreement No. 3 for the American Fork-Dry Creek Watershed, State of Utah, executed by the Sponsoring Local Organization named therein and the Service, became effective on the 2nd day of April 1962; and

Whereas the Supplemental Watershed Work Plan Agreement No. 4 for the American Fork-Dry Creek Watershed, State of Utah, executed by the Sponsoring Local Organization named therein and the Service, became effective on the 8th day of April 1963; and

Whereas the Supplemental Watershed Work Plan Agreement No. 5 for the American Fork-Dry Creek Watershed, State of Utah, executed by the Sponsoring Local Organization named therein and the Service, became effective on the 6th day of January 1965; and

Whereas the Supplemental Watershed Work Plan Agreement No. 6 for the American Fork-Dry Creek Watershed, State of Utah, executed by the Sponsoring Local Organization named therein and the Service, became effective on the 7th day of March 1967; and

Whereas the Supplemental Watershed Work Plan Agreement No. 7 for the American Fork-Dry Creek Watershed, State of Utah, executed by the Sponsoring Local Organization named therein and the Service, became effective on the 22nd day of February 1972; and NRCS Agreement No. 68-8D43-59-01-13 Dry Creek Debris Basin Rehabilitation Supplemental Watershed Work Plan Agreement No. 13; and

Whereas the Supplemental Watershed Work Plan Agreement No. 8 for the American Fork-Dry Creek Watershed, State of Utah, executed by the Sponsoring Local Organization named therein and the Service, became effective on the 29th day of July 2013; and

Whereas the Supplemental Watershed Work Plan Agreement No. 8 changed the Sponsoring Local Organization to include only the North Utah County Water Conservancy District (referred to herein as NUCWCD) under the following conditions: American Fork City signed Supplement 8 subject to allowing NUCWCD to represent the City as to the rehabilitation projects involving Tibble Fork and Silver Lake only. The City retains its right to approve in writing all future supplements affecting sites other than Tibble Fork and Silver Lake.

Alpine Irrigation Company did not sign Supplement 8 and instead signed a statement dated 5/29/2013 declaring it is withdrawing as a sponsoring organization to the American Fork – Dry Creek Watershed Supplemental Plan Agreement and does not wish to participate in any further projects regarding the watershed plan.

The Utah Division of Wildlife Resources (referred to herein as UDWR and previously known as the "Utah State Department of Fish and Game") did not sign Supplement 8 because UDWR wants to remain as a signatory in order to support watershed efforts for purposes of stocking certain conservation pools within the American Fork-Dry Creek Watershed with fish.

Whereas the Supplemental Watershed Work Plan Agreement No. 9 for the American Fork-Dry Creek Watershed, State of Utah, executed by the Sponsoring Local Organization named therein and the NRCS, became effective on the 17th day of March 2014; and

Whereas the Supplemental Watershed Work Plan Agreement No. 10 for the American Fork-Dry Creek Watershed, State of Utah, executed by the Sponsors named therein and the NRCS, became effective on the 24th day of March 2015; and

Whereas the Supplemental Watershed Work Plan Agreement No. 11 for the American Fork-Dry Creek Watershed, State of Utah, executed by the Sponsors named therein and the NRCS, became effective on the 6th day of October 2015; and

Whereas the Supplemental Watershed Work Plan Agreement No. 12 for the American Fork-Dry Creek Watershed, State of Utah, executed by the Sponsors named therein and the NRCS, became effective on the 6th day of October 2015; and

Whereas the Supplemental Watershed Work Plan Agreement No. 13 for the American Fork-Dry Creek Watershed, State of Utah, executed by the Sponsors named therein and the NRCS, became effective on the 10th day of October 2016; and

Whereas the Supplemental Watershed Work Plan Agreement No. 14 for the American Fork-Dry Creek Watershed, State of Utah, executed by the Sponsors named therein and the NRCS, became effective on the __th day of _____ 2019; and

Whereas application has heretofore been made to the Secretary of Agriculture by Sponsors for assistance in preparing a plan for works of improvement for Supplement No. 15 to the American Fork Watershed, Utah, under the authority of the Watershed Protection and Flood Prevention Act, as amended (16 U.S.C. Sections 1001 to 1008, 1010, and 1012; and

Whereas the responsibility for administration of the Watershed Protection and Flood Prevention Act (Public Law 83-566), as amended, has been assigned by the Secretary of Agriculture to the NRCS; and

Whereas there has been developed through the cooperative efforts of the Sponsors and the NRCS a Watershed Work Plan and Environmental Assessment for works of improvement for the American Fork Watershed, Utah, hereinafter referred to as the Watershed Project or Plan, which Plan is annexed to and made part of this agreement;

Now, therefore, the Secretary of Agriculture through the NRCS and the Sponsors hereby agree on this Watershed Plan and that the works of improvement for this project will be installed, operated, and maintained in accordance with the terms, conditions, and stipulations provided for in this Watershed Plan and including the following:

1. Term. The term of this agreement is for the installation period and evaluated life of the project (52 years) and does not commit the NRCS to assistance of any kind beyond the end of the evaluated life.

2. Costs. The costs shown in this plan are preliminary estimates. Final costs to be borne by the parties hereto will be the actual costs incurred in the installation of works of improvement.

3. Real Property. The Sponsors will acquire such real property as will be needed in connection with the works of improvement. The amounts and percentages of the real property acquisition costs to be borne by the Sponsors and the NRCS are as shown in the cost-share table in section 5 hereof.

The Sponsors agrees that all land acquired for measures, other than land treatment practices, with financial or credit assistance under this agreement will not be sold or otherwise disposed of for the evaluated life of the project except to a public agency that will continue to maintain and operate the development in accordance with the operation and maintenance agreement.

4. Uniform Relocation Assistance and Real Property Acquisition Policies Act. The Sponsors hereby agrees to comply with all of the policies and procedures of the Uniform Relocation Assistance and Real Property Acquisition Policies Act (42 U.S.C. Section 4601 et seq. as further implemented through regulations in 49 CFR Part 24 and 7 CFR Part 21) when acquiring real property interests for this federally assisted project. If the Sponsors are legally unable to comply with the real property acquisition requirements, it agrees that, before any Federal financial assistance is furnished; it will provide a statement to that effect, supported by an opinion of the chief legal officer of the state containing a full discussion of the facts and law involved. This statement may be accepted as constituting compliance.

5. Cost-Share for Watershed Project Plans. Table 1-American Fork Watershed Agreement Cost-Share Percentages and Amounts shows the estimated cost-share percentages and amounts for Watershed Project Plan implementation.

Table 1. American Fork Watershed Agreement – Cost-Share Percentages and Amounts

Works of Improvement	NRCS		Sponsors		Total Costs
Cost-Shareable Items	%	Cost	%	Cost	
Construction	100	$11,542,000	0	$0	$11,542,000
Engineering	100	$1,721,000	0	$0	$1,721,000
Subtotal: Cost-Sharable	100	$13,263,000	0	$0	$13,263,000
Non-Cost-Shareable Items	NRCS		Sponsors		Total Costs
	%	Cost	%	Cost	
Real Property Acquisition Cost	0	$0	100	$2,944,000	$2,944,000
Subtotal: Non-Cost-Shareable	0	$0	100	$2,944,000	$2,944,000
Grand Total		**$13,263,000**		**$2,944,000**	**$16,207,000**

6. Land Treatment Agreements. The sponsors will provide assistance to landowners and operators to ensure the installation of the land treatment measures shown in the Watershed Project Plan. The sponsors will encourage landowners and operators to continue to operate and maintain the land treatment measures after the long-term contracts expire, for the protection and improvement of the watershed.

7. Floodplain Management. Before construction of any project for flood prevention, the Sponsors agree to participate in and comply with applicable Federal floodplain management and flood insurance programs. The Sponsors participate in the flood insurance program and are currently in good standing.

8. Water and Mineral Rights. The sponsors will acquire or provide assurance that landowners or resource users have acquired such water, mineral, or other natural resources rights pursuant to State law as may be needed in the installation and operation of the works of improvement.

9. Permits. The Sponsors will obtain and bear the cost for all necessary Federal, State, and local permits required by law, ordinance, or regulation for installation of the works of improvement.

10. NRCS Assistance. This agreement is not a fund-obligating document. Financial and other assistance to be furnished by the NRCS in carrying out the plan is contingent upon the fulfillment of applicable laws and regulations and the availability of appropriations for this purpose.

11. Additional Agreements. A separate agreement will be entered into between the Sponsors and the NRCS before either party initiates work involving funds of the other party. Such agreements will set forth in detail the financial and working arrangements and other conditions that are applicable to the specific works of improvement.

12. Amendments. This plan may be amended or revised only by mutual agreement of the parties hereto, except that the NRCS may deauthorize or terminate funding at any time if it determines that the Sponsors have failed to comply with the conditions of this agreement or when the program funding or authority expires. In this case, the NRCS must promptly notify the Sponsors in writing of the determination and the reasons for the deauthorization of project funding, together with the effective date. Payments made to the Sponsors or recoveries by the NRCS must be in accordance with the legal rights and liabilities of the parties when project funding has been deauthorized. An amendment to incorporate changes affecting a specific measure may be made by mutual agreement between the Sponsors and the NRCS having specific responsibilities for the measure involved.

13. Prohibitions. No member of or delegate to Congress, or resident commissioner, may be admitted to any share or part of this plan, or to any benefit that may arise therefrom; but this

provision may not be construed to extend to this agreement if made with a corporation for its general benefit.

14. Operation and Maintenance (O&M). The Sponsors will be responsible for the operation, maintenance, and any needed replacement of the works of improvement by performing the work or arranging for such work, in accordance with an O&M Agreement. An O&M agreement will be entered into before Federal funds are obligated and will continue for the project life 52-years. Although the Sponsors' responsibility to the Federal Government for O&M ends when the O&M agreement expires upon completion of the evaluated life of measures covered by the agreement, the Sponsors acknowledge that continued liabilities and responsibilities associated with works of improvement may exist beyond the evaluated life.

15. Emergency Action Plan. Prior to construction, the sponsors must prepare an Emergency Action Plan (EAP) for each dam or similar structure where failure may cause loss of life or as required by state and local regulations. The EAP must meet the minimum content specified in NRCS Title 180, National Operation and Maintenance Manual (NOMM), Part 500, Subpart F, Section 500.52, and meet applicable State agency dam safety requirements. The NRCS will determine that an EAP is prepared prior to the execution of fund obligating documents for construction of the structure. EAPs must be reviewed and updated by the sponsors annually.

16. Nondiscrimination Provisions. In accordance with Federal civil rights law and U.S. Department of Agriculture (USDA) civil rights regulations and policies, the USDA, its Agencies, offices, and employees, and institutions participating in or administering USDA programs are prohibited from discriminating based on race, color, national origin, religion, sex, gender identity (including gender expression), sexual orientation, disability, age, marital status, family/parental status, income derived from a public assistance program, political beliefs, or reprisal or retaliation for prior civil rights activity, in any program or activity conducted or funded by USDA (not all bases apply to all programs). Remedies and complaint filing deadlines vary by program or incident.

Persons with disabilities who require alternative means of communication for program information (e.g., Braille, large print, audiotape, American Sign Language, etc.) should contact the responsible Agency or USDA's TARGET Center at (202) 720-2600 (voice and TTY) or contact USDA through the Federal Relay Service at (800) 877-8339. Additionally, program information may be made available in languages other than English.

To file a program discrimination complaint, complete the USDA Program Discrimination Complaint Form, AD-3027, found online at How to File a Program Discrimination Complaint and at any USDA office or write a letter addressed to USDA and provide in the letter all of the information requested in the form. To request a copy of the complaint form, call (866) 632-9992. Submit your completed form or letter to USDA by: (1) mail: U.S. Department of Agriculture, Office of the Assistant Secretary for Civil Rights, 1400 Independence Avenue, SW, Washington, D.C. 20250-9410; (2) fax: (202) 690-7442; or (3) email: program.intake@usda.gov.

USDA is an equal opportunity provider, employer, and lender.

By signing this agreement, the recipient assures the USDA that the program or activities provided for under this agreement will be conducted in compliance with all applicable Federal civil rights laws, rules, regulations, and policies.

17. Certification Regarding Drug-Free Workplace Requirements (7 CFR Part 3021). By signing this Watershed Agreement, the Sponsor is providing the certification set out below. If it is later determined that the Sponsor knowingly rendered a false certification or otherwise violated the requirements of the Drug-Free Workplace Act, the NRCS, in addition to any other remedies available to the Federal Government, may take action as authorized under the Drug-Free Workplace Act.

Controlled substance means a controlled substance in Schedules I through V of the Controlled Substances Act (21 U.S.C. Section 812) and as further defined by regulation (21 CFR Sections 1308.11 through 1308.15).

Conviction means a finding of guilt (including a plea of nolo contendere) or imposition of sentence, or both, by any judicial body charged with the responsibility to determine violations of the Federal or State criminal drug statutes;

A criminal statute means a Federal or non-Federal criminal statute involving the manufacturing, distribution, dispensing, use, or possession of any controlled substance.

Employee means the employee of a grantee directly engaged in the performance of work under a grant, including: (i) all direct charge employees; (ii) all indirect charge employees unless their impact or involvement is insignificant to the performance of the grant; and (iii) temporary personnel and consultants who are directly engaged in the performance of work under the grant and who are on the grantee's payroll. This definition does not include workers not on the payroll of the grantee (e.g., volunteers, even if used to meet a matching requirement; consultants or independent contractors not on the grantees' payroll; or employees of sub-recipients or sub-contractors in covered workplaces).

Certification:

A. The Sponsors certify that they will or will continue to provide a drug-free workplace by:

(1) Publishing a statement notifying employees that the unlawful manufacture, distribution, dispensing, possession, or use of a controlled substance is prohibited in the grantee's workplace and specifying the actions that will be taken against employees for violation of such prohibition.

(2) Establishing an ongoing drug-free awareness program to inform employees about:

(a) The danger of drug abuse in the workplace.

(b) The grantee's policy of maintaining a drug-free workplace;

(c) Any available drug counseling, rehabilitation, and employee assistance programs; and

(d) The penalties that may be imposed upon employees for drug abuse violations occurring in the workplace.

(3) Making it a requirement that each employee to be engaged in the performance of the grant be given a copy of the statement required by paragraph (1).

(4) Notifying the employee in the statement required by paragraph (1) that, as a condition of employment under the grant, the employee must:

(a) Abide by the terms of the statement; and

(b) Notify the employer in writing of his or her conviction for a violation of a criminal drug statute occurring in the workplace no later than five calendar days after such conviction.

(5) Notifying the NRCS in writing, within 10 calendar days after receiving notice under paragraph (4)(b) from an employee or otherwise receiving actual notice of such conviction. Employers of convicted employees must provide notice, including position title, to every grant officer or other designee on whose grant activity the convicted employee was working, unless the Federal agency has designated a central point for the receipt of such notices. Notice must include the identification numbers of each affected grant.

(6) Taking one of the following actions, within 30 calendar days of receiving notice under paragraph (4) (b), with respect to any employee who is so convicted.

(a) Taking appropriate personnel action against such an employee, up to and including termination, consistent with the requirements of the Rehabilitation Act of 1973, as amended; or

(b) Requiring such employee to participate satisfactorily in a drug abuse assistance or rehabilitation program approved for such purposes by a Federal, State, or local health, law enforcement, or other appropriate agency.

(7) Making a good faith effort to continue to maintain a drug-free workplace through implementation of paragraphs (1), (2), (3), (4), (5), and (6).

B. The Sponsors may provide a list of the sites for the performance of work done in connection with a specific project or other agreement.

C. Agencies must keep the original of all disclosure reports in the official files of the agency.

18. Certification Regarding Lobbying (7 CFR Part 3018) (for projects > $100,000)

A. The Sponsors certify to the best of their knowledge and belief, that:

(1) No Federal appropriated funds have been paid or will be paid, by or on behalf of the Sponsor, to any person for influencing or attempting to influence an officer or employee of an agency, Member of Congress, an officer or employee of Congress, or an employee of a Member of Congress in connection with the awarding of any Federal contract, the making of any Federal grant, the making of any Federal loan, the entering into of any cooperative agreement, and the extension, continuation, renewal, amendment, or modification of any Federal contract, grant, loan, or cooperative agreement.

(2) If any funds other than Federal appropriated funds have been paid or will be paid to any person for influencing or attempting to influence an officer or employee of any agency, a Member of Congress, an officer or employee of Congress, or an employee of a Member of Congress in connection with this Federal contract, grant, loan, or cooperative agreement, the undersigned must complete and submit Standard Form LLL, "Disclosure Form to Report Lobbying," in accordance with its instructions.

(3) The Sponsor must require that the language of this certification be included in the award documents for all sub-awards at all tiers (including subcontracts, sub- grants, and contracts under grants, loans, and cooperative agreements) and that all sub-recipients must certify and disclose accordingly.

B. This certification is a material representation of fact upon which reliance was placed when this transaction was made or entered into. Submission of this certification is a prerequisite for making or entering into this transaction imposed by 31 U.S.C., Section 1352. Any person who fails to file the required certification shall be subject to a civil penalty of not less than $10,000 and not more than $100,000 for each such failure.

19. Certification Regarding Debarment, Suspension, and Other Responsibility Matters - Primary Covered Transactions (7 CFR Part 3017).

A. The Sponsors certify to the best of their knowledge and belief, that they and their principals:

(1) Are not presently debarred, suspended, proposed for debarment, declared ineligible, or voluntarily excluded from covered transactions by any Federal department or agency.

(2) Have not within a 3-year period preceding this proposal been convicted of or had a civil judgment rendered against them for commission of fraud or a criminal offense in connection with obtaining, attempting to obtain, or performing a public (Federal, State, or local) transaction or contract under a public transaction; violation of Federal or State antitrust statutes or commission of embezzlement, theft, forgery, bribery, falsification or destruction of records, making false statements, or receiving stolen property;

(3) Are not presently indicted for or otherwise criminally or civilly charged by a governmental entity (Federal, State, or local) with commission of any of the offenses enumerated in paragraph A(2) of this certification; and

(4) Have not within a 3-year period preceding this application/proposal had one or more public transactions (Federal, State, or local) terminated for cause or default.

B. Where the Sponsor is unable to certify to any of the statements in this certification, such prospective participant must attach an explanation to this agreement.

20. Clean Air and Water Certification. (Applicable if this agreement exceeds $100,000, or a facility to be used has been subject of a conviction under the Clean Air Act (42 U.S.C. Section 7413(c)) or the Federal Water Pollution Control Act (33 U.S.C. Section 1319(c)) and is listed by EPA or is not otherwise exempt.)

A. The Sponsors signatory to this agreement certifies as follows:

(1) Any facility to be utilized in the performance of this proposed agreement is ( ), is not (X) listed on the Environmental Protection Agency List of Violating Facilities.

(2) To promptly notify the NRCS-State administrative officer prior to the signing of this agreement by the NRCS, of the receipt of any communication from the Director, Office of Federal Activities, U.S. Environmental Protection Agency, indicating that any facility which is proposed for use under this agreement is under consideration to be listed on the Environmental Protection Agency List of Violating Facilities.

(3) To include substantially this certification, including this subparagraph, in every nonexempt sub-agreement.

B. The Sponsors signatory to this agreement agrees as follows:

(1) To comply with all the requirements of section 114 of the Clean Air Act as amended (42 U.S.C. Section 7414) and section 308 of the Federal Water Pollution Control Act (33 U.S.C. Section 1318), respectively, relating to inspection, monitoring, entry, reports, and information, as well as other requirements specified in section 114 and section 308 of the Air Act and the Water Act, issued there under before the signing of this agreement by the NRCS.

(2) That no portion of the work required by this agreement will be performed in facilities listed on the EPA List of Violating Facilities on the date when this agreement was signed by the NRCS unless and until the EPA eliminates the name of such facility or facilities from such listing.

(3) To use their best efforts to comply with clean air standards and clean water standards at the facilities in which the agreement is being performed.

(4) To insert the substance of the provisions of this clause in any nonexempt sub- agreement.

C. The terms used in this clause have the following meanings:

(1) The term “Air Act” means the Clean Air Act, as amended (42 U.S.C. Section 7401 et seq.).

(2) The term “Water Act” means Federal Water Pollution Control Act, as amended (33 U.S.C. Section 1251 et seq.).

(3) The term “clean air standards” means any enforceable rules, regulations, guidelines, standards, limitations, orders, controls, prohibitions, or other requirements which are contained in, issued under, or otherwise adopted pursuant to the Air Act or Executive Order 11738, an applicable implementation plan as described in section 110 of the Air Act (42 U.S.C. Section 7414) or an approved implementation procedure under section 112 of the Air Act (42 U.S.C. Section 7412).

(4) The term "clean water standards" means any enforceable limitation, control, condition, prohibition, standards, or other requirement which is promulgated pursuant to the Water Act or contained in a permit issued to a discharger by the Environmental Protection Agency or by a State under an approved program, as authorized by section 402 of the Water Act (33 U.S.C. Section 1342), or by a local government to assure compliance with pretreatment regulations as required by section 307 of the Water Act (33 U.S.C. Section 1317).

(5) The term "facility" means any building, plant, installation, structure, mine, vessel, or other floating craft, location or site of operations, owned, leased, or supervised by a sponsor, to be utilized in the performance of an agreement or sub- agreement. Where a location or site of operations contains or includes more than one building, plant, installation, or structure, the entire location will be deemed to be a facility except where the Director, Office of Federal Activities, Environmental Protection Agency, determines that independent facilities are collocated in one geographical area.

21. Assurances and Compliance. As a condition of the grant or cooperative agreement, the sponsor assures and certifies that it is in compliance with and will comply in the course of the agreement with all applicable laws, regulations, Executive orders and other generally applicable requirements, including those set out below which are hereby incorporated in this agreement by reference, and such other statutory provisions as a specifically set forth herein.

State, Local, and Indian Tribal Governments: OMB Circular Nos. A-87, A-102, A-129, and A-133; and 7 CFR Parts 3015, 3016, 3017, 3018, 3021, and 3052.

Nonprofit Organizations, Hospitals, Institutions of Higher Learning: OMB Circular Nos. A-110, A-122, A-129, and A-133; and 7 CFR Parts 3015, 3017, 3018, 3019, 3021 and 3052.

22. Examination of Records. The Sponsor must give the NRCS or the Comptroller General, through any authorized representative, access to and the right to examine all records, books, papers, or documents related to this agreement, and retains all records related to this agreement for a period of three years after completion of the terms of this agreement in accordance with the applicable OMB Circular.

23. Signatures

Sponsor: American Fork City
By: David Bunker
Title: City Administrator
Date:
Address: 51 East Main Street, American Fork, Utah Zip Code: 84003
Sponsor: Lehi City
By: Brad Kenison
Title: Assistant City Engineer
Date:
Address: 153 North 100 East, Lehi, Utah Zip Code: 84043
Sponsor: Saratoga Springs City
By:
Title:

Date:	
Address:	Zip Code:
USDA United States Department of Agriculture Natural Resources Conservation Service	
Approved By: _____	
Emily Fife	
Title: NRCS State Conservationist	
Date:	

Agenda Item No: 14

City Council Agenda Item Report

Meeting Date: July 22, 2025
Submitted By: Teisha WIlson
Submitting Department:
Item Type: Action Item
Agenda Section: Regular Agenda

Subject:
Consideration of holding a Closed Meeting to discuss pending or reasonably imminent litigation.

Suggested Action:

Attachments: