CITY OF LINCOLN
DESIGN REVIEW BOARD
October 22, 2025

Ronee Briley, Public Appointee

Sean Freitas, City Manager Designee

Michele Hutchinson, Planning Commission Appointee

Efren Sanchez, City Planner

AS A COURTESY, PLEASE TURN OFF ALL CELL PHONES & ELECTRONIC DEVICES DURING THE MEETING

BOARD / COMMISSION / COMMITTEE

9:00 AM
First Floor Conference Room
City Hall, 600 Sixth Street
Lincoln, CA 95648
or attend via
ZOOM
register by using this link:
https://us06web.zoom.us/webinar/register/WN__janb1GkRuuBnta63jHtSA
or participate by calling US: +1 (669) 900-6833
use ID# 891 8724 3342 and use *9 to raise hand to speak

1. CALL TO ORDER

2. ROLL CALL

3. CITIZENS ADDRESSING THE COMMITTEE (Within the subject matter jurisdiction of the Board / Commission / Committee) *All speakers' time will be limited to three (3) minutes, unless extended by the Chairperson. All comments or questions should be addressed to the Board and in most cases, the Board is prohibited from discussing or taking action on any item not appearing on the posted agenda, but may engage in brief discussion, provide direction to City staff, or schedule items for future meetings.

4. PROJECTS UNDER REVIEW

4.A Prairie Point Telecommunications Facility

5. NEXT REGULARLY SCHEDULED MEETING - November 20, 2025 at 9:00am

6. ADJOURNMENT

NOTE: *Materials related to an item on this Agenda submitted to the Council/Redevelopment Successor Agency after distribution of the agenda packet are available for public inspection in the City Clerk's office at 600 Sixth Street, Lincoln, CA during normal business hours. Such documents are also available on the City of Lincoln's website at https://www.lincolnca.gov/ subject to staff's availability to post the documents before the meeting.*

In compliance with the American with Disabilities Act, the City will provide special assistance for disabled members of the public. The meeting room is wheelchair accessible and disabled parking is available. If you have a disability and need a disability-related modification or accommodation to participate in the meeting, please contact the City Clerk's Office at (916) 434-2490. As a courtesy, please make every effort to inform the Clerk of your needs at least 24 hours prior to the meeting so the City may make reasonable arrangements to ensure accessibility to this meeting.

Pursuant to applicable laws and regulations, including without limitation, California Government Code Section 65009 and/or California Public Resources Code Section 21177, if you wish to challenge in court any of the above decisions (including any action regarding planning, zoning and/or environmental decisions), you may be limited to raising only those issues you or someone else raised at the public hearing(s) described in this notice/agenda, or in written correspondence delivered to the City at, or prior to, the public hearing.

Levine Act Provisions -- The Levine Act requires a party (or the party's agent(s)) to a proceeding before the City of Lincoln that involves any action or consideration to their contract, license, permit, or other entitlement for use, to disclose any campaign contribution made to City elected or appointed officer totaling more than $500 within the 12 months before the City decision. This includes contributions to Councilmembers, Planning Commissioners and members of other City boards and commissions.

STAFF REPORT

Item Number 4.A

SUBJECT: Prairie Point Telecommunications Facility

SUBMITTED BY: Mikaela Noble

DEPARTMENT: Community Development

DATE: October 22, 2025

BACKGROUND/INTRODUCTION:

Conditional Use Permit application for the construction and operation a Class 3, 60-foot tall stealth mono-broadleaf Verizon Wireless telecommunications tower and associated ground equipment within a 3,600 SF (60 feet by 60 feet) lease area within the Twelve Bridges plan area. The facility would include installation of a 300 SF (15 feet by 20 feet) equipment shelter sun shade and security fencing surrounding the lease area. The project site is located on a 27.3-acre parcel located southwest of Twelve Bridges Elementary School and is zoned Open Space - Conservation (OS-C), subject to the Twelve Bridges General Development Plan. APNs: 334-010-013, 334-060-064 (Property Owner: City of Lincoln; Applicant: Vertical Bridge).

ATTACHMENTS:

Attachment 1 Prairie Point Site Plans.pdf

Attachment 2 Prairie Point Tower Photo Simulations.pdf

Attachment 1
Prairie Point Site Plans

PROJECT DESCRIPTION:

A (N) VERTICAL BRIDGE UNMANNED TELECOMMUNICATION FACILITY CONSISTING OF INSTALLING:

- (N) VERTICAL BRIDGE 60'–0"X60'–0" (3,600 SQ FT) LEASE AREA W/ (N) VERIZON WIRELESS 20'–0" X 15'–0" (300 SQ FT) EQUIPMENT LEASE AREA INSIDE
- (N) VERTICAL BRIDGE MONO–BROADLEAF
- (12) (N) VERIZON WIRELESS ANTENNAS
- (9) (N) VERIZON WIRELESS RADIO UNITS @ ANTENNAS
- (4) (N) VERIZON WIRELESS RAYCAP 6627 SURGE SUPPRESSORS, (2) @ EQUIPMENT & (2) @ ANTENNAS
- (4) (N) VERIZON WIRELESS 6X12 HYBRID CABLES
- (1) (N) VERIZON WIRELESS 30KW DIESEL GENERATOR ON (N) 300 GAL UL #142 RATED FUEL TANK
- (N) UTILITIES TO (N) SITE LOCATION

CODE COMPLIANCE:

ALL WORK & MATERIALS SHALL BE PERFORMED & INSTALLED IN ACCORDANCE WITH THE CURRENT EDITIONS OF THE FOLLOWING CODES AS ADOPTED BY THE LOCAL GOVERNING AUTHORITIES. NOTHING IN THESE PLANS IS TO BE CONSTRUED TO PERMIT WORK NOT CONFORMING TO THESE CODES:

2022 CALIFORNIA ADMINISTRATIVE CODE, PART 1, TITLE 24 C.C.R.
2022 CALIFORNIA BUILDING CODE (CBC), PART 2, VOLUME 1&2, TITLE 24 C.C.R.
(2021 INTERNATIONAL BUILDING CODE AND 2022 CALIFORNIA AMENDMENTS)
2022 CALIFORNIA ELECTRICAL CODE (CEC), PART 3, TITLE 24 C.C.R.
(2020 NATIONAL ELECTRICAL CODE AND 2022 CALIFORNIA AMENDMENTS)
2022 CALIFORNIA MECHANICAL CODE (CMC) PART 4, TITLE 24 C.C.R.
(2021 UNIFORM MECHANICAL CODE AND 2022 CALIFORNIA AMENDMENTS)
2022 CALIFORNIA PLUMBING CODE (CPC), PART 5, TITLE 24 C.C.R.
(2021 UNIFORM PLUMBING CODE AND 2022 CALIFORNIA AMENDMENTS)
2022 CALIFORNIA ENERGY CODE (CEC), PART 6, TITLE 24 C.C.R.
2022 CALIFORNIA FIRE CODE, PART 9, TITLE 24 C.C.R.
(2021 INTERNATIONAL FIRE CODE AND 2022 CALIFORNIA AMENDMENTS)
2022 CALIFORNIA GREEN BUILDING STANDARDS CODE, PART 11, TITLE 24 C.C.R.
2022 CALIFORNIA REFERENCED STANDARDS, PART 12, TITLE 24 C.C.R.
ANSI/EIA–TIA–222–H

ALONG WITH ANY OTHER APPLICABLE LOCAL & STATE LAWS AND REGULATIONS

DISABLED ACCESS REQUIREMENTS

THIS FACILITY IS UNMANNED & NOT FOR HUMAN HABITATION. DISABLED ACCESS & REQUIREMENTS ARE NOT REQUIRED IN ACCORDANCE WITH CALIFORNIA STATE BUILDING CODE, TITLE 24 PART 2, SECTION 11B–203.5

vertical bridge

US-CA-7349

PRAIRIE POINT

2574 EASTRIDGE DRIVE
LINCOLN, CA 95648

60' MONO-BROADLEAF

APPROVAL BLOCK				
		APPROVED	APPROVED AS NOTED	DISAPPROVED/REVISE
VERTICAL BRIDGE	DATE	☐	☐	☐
SITE ACQUISITION	DATE	☐	☐	☐
CONSTRUCTION MANAGER	DATE	☐	☐	☐
ZONING	DATE	☐	☐	☐
RF ENGINEERING	DATE	☐	☐	☐



VICINITY MAP
N.T.S.

DRAWING INDEX

DRAWING #	TITLE	REV
T–1.1	TITLE SHEET	–
T–1.2	SIGNAGE DETAILS	–
C–1	TOPOGRAPHIC SURVEY	–
C–2	TOPOGRAPHIC SURVEY	–
A–1.1	OVERALL SITE PLAN	–
A–1.2	ENLARGED SITE PLAN	–
A–1.3	EQUIPMENT PLAN	–
A–2.1	ANTENNA PLAN	–
A–3.1	ELEVATIONS	–
A–4.1	DETAILS	–
E–1.1	ELECTRICAL PLAN	–

PRELIMINARY CIVIL GRADING PLANS (BY OTHERS):

C0.0	PRELIMINARY CIVIL COVER SHEET
C1.0	PRELIMINARY ACCESS DRIVE PLAN AND PROFILE
C1.1	PRELIMINARY ACCESS DRIVE PLAN AND PROFILE
C2.0	PRELIMINARY EROSION AND SEDIMENT CONTROL PLAN

At all services & grounding trenches, provide " WARNING" tape at 12" below grade.

CALL
"CALL BEFORE YOU DIG"
811
NATIONWIDE UNDERGROUND SERVICE ALERT



LOCATION MAP
N.T.S.

PROJECT INFOMATION

SITE NAME:	PRAIRIE POINT
VERTICAL BRIDGE SITE ID:	US–CA–7349
MDG LOCATION ID:	5000918128
COUNTY:	PLACER
JURISDICTION:	CITY OF LINCOLN
APN:	334–010–013
SITE ADDRESS:	2574 EASTRIDGE DRIVE LINCOLN, CA 95648
CURRENT ZONING:	TBD
CONSTRUCTION TYPE:	V–B
OCCUPANCY TYPE:	U, (UNMANNED COMMUNICATIONS FACILITY)
LATITUDE:	N 38° 50' 41.36" NAD 83 N (38.844822°) NAD 83
LONGITUDE:	W 121° 16' 17.16" NAD 83 W (–121.271433°) NAD 83
GROUND ELEVATION:	261.5' AMSL

PROJECT INFOMATION

PROPERTY OWNER:	CITY OF LINCOLN
APPLICANT:	THE TOWERS, LLC 750 PARK OF COMMERCE DRIVE, SUITE 200 BOCA RATON, FL 33487
LEASING CONTACT:	ATTN: KAREN LIENERT (916) 834–0834 KARENLIENERT@GMAIL.COM
ZONING CONTACT:	ATTN: KAREN LIENERT (916) 834–0834 KARENLIENERT@GMAIL.COM
CONSTRUCTION CONTACT:	ATTN: BRETT EWING (916) 844–9324 BRETT.EWING@EPICWIRELESS.NET
TOWER OWNER:	THE TOWERS, LLC 750 PARK OF COMMERCE DRIVE, SUITE 200 BOCA RATON, FL 33487 (561) 406–4014
POWER COMPANY:	PG&E
TELCO COMPANY:	TBD

vertical bridge

verizon

2770 SHADELANDS DR, BLDG 11
WALNUT CREEK, CA 94598

ENGINEER:

Streamline Engineering and Design, Inc.

3843 TAYLOR ROAD, SUITE A, LOOMIS, CA 95650
Contact: Kevin Sorensen Phone: 916-660-1930
E-Mail: kevin@streamlineeng.com Fax: 916-660-1941

THESE PLANS AND SPECIFICATIONS, AS INSTRUMENTS OF SERVICE, ARE AND SHALL REMAIN THE PROPERTY OF STREAMLINE ENGINEERING AND DESIGN INC. WHETHER THE PROJECTS FOR WHICH THEY ARE MADE ARE EXECUTED OR NOT. THESE DRAWINGS AND SPECIFICATIONS SHALL NOT BE USED BY ANY PERSON OR ENTITY ON OTHER PROJECTS WITH OUT PRIOR WRITTEN CONSENT OF THE ENGINEER. Copyright © 2025, STREAMLINE ENGINEERING AND DESIGN INC. ALL RIGHTS RESERVED.

REV	SUBMITTAL/REVISION	CAD	DATE
7	CLIENT REV	T.T.	07/29/25
6	CLIENT REV	D.H.	06/18/25
5	CLIENT REV	J.Z.	05/30/25
4	CLIENT REV	D.H.	08/13/24
3	CLIENT REV	S.V.	04/10/24
2	CLIENT REV	T.K.	02/28/24

DRAWN: SEAD
CHECKED: S. SAVIG
APPROVED: -

PROJECT NUMBER: US-CA-7349

PROJECT TITLE:

PRAIRIE POINT

2574 EASTRIDGE DRIVE
LINCOLN, CA 95648

ENGINEER STAMP:

PRELIMINARY: NOT FOR CONSTRUCTION

KEVIN R. SORENSEN
S4469

DRAWING TITLE:

TITLE SHEET

Drawing Scale: AS NOTED
Date: 07/29/2025

ZD

IT IS A VIOLATION OF LAW FOR ANY PERSON, UNLESS THEY ARE ACTING UNDER THE DIRECTION OF A LICENSED PROFESSIONAL ENGINEER, TO ALTER THIS DOCUMENT.

DRAWING NUMBER:

T-1.1



1 TYPICAL ADDRESS SIGN DETAIL (@ LEASE AREA ACCESS DOOR)

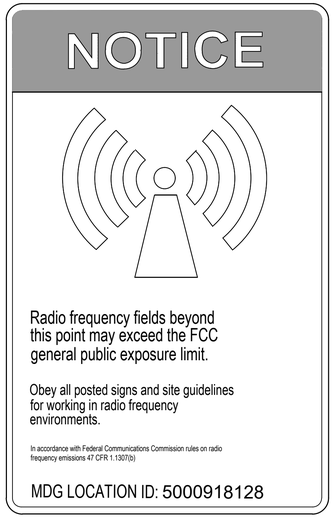

2 TYPICAL CAUTION SIGN

NOTE: SIGN TO BE PERMANENTLY MOUNTED AT ANTENNA LOCATIONS.



3 TYPICAL HAZARD SIGN



4 TYPICAL HAZARD SIGN



5 TYPICAL ADDRESS SIGN DETAIL (@ LEASE AREA ACCESS DOOR)

vertical bridge

verizon

2770 SHADELANDS DR, BLDG 11
WALNUT CREEK, CA 94598

ENGINEER:
StreamLine Engineering and Design, Inc.
3843 TAYLOR ROAD, SUITE A, LOOMIS, CA 95650
Contact: Kevin Sorensen Phone: 916-660-1930
E-Mail: kevin@streamlineeng.com Fax: 916-660-1941

THESE PLANS AND SPECIFICATIONS, AS INSTRUMENTS OF SERVICE, ARE AND SHALL REMAIN THE PROPERTY OF STREAMLINE ENGINEERING AND DESIGN INC. WHETHER THE PROJECTS FOR WHICH THEY ARE MADE ARE EXECUTED OR NOT. THESE DRAWINGS AND SPECIFICATIONS SHALL NOT BE USED BY ANY PERSON OR ENTITY ON OTHER PROJECTS WITH OUT PRIOR WRITTEN CONSENT OF THE ENGINEER. Copyright © 2020, STREAMLINE ENGINEERING AND DESIGN INC. ALL RIGHTS RESERVED.

REV	SUBMITTAL/REVISION	CAD	DATE
7	CLIENT REV	T.T.	07/29/25
6	CLIENT REV	D.H.	06/18/25
5	CLIENT REV	J.Z.	05/30/25
4	CLIENT REV	D.H.	08/13/24
3	CLIENT REV	S.V.	04/10/24
2	CLIENT REV	T.K.	02/28/24

DRAWN: SEAD
CHECKED: S. SAVIG
APPROVED: -

PROJECT NUMBER: US-CA-7349

PROJECT TITLE:

PRAIRIE POINT

2574 EASTRIDGE DRIVE
LINCOLN, CA 95648

ENGINEER STAMP:

PRELIMINARY: NOT FOR CONSTRUCTION

KEVIN R. SORENSEN
S4469

DRAWING TITLE:

SIGNAGE DETAILS

Drawing Scale: AS NOTED
Date: 07/29/2025

ZD

IT IS A VIOLATION OF LAW FOR ANY PERSON, UNLESS THEY ARE ACTING UNDER THE DIRECTION OF A LICENSED PROFESSIONAL ENGINEER, TO ALTER THIS DOCUMENT.

DRAWING NUMBER:

T-1.2

Lease Area Description

All that certain lease area being a portion of that certain "Remainder Parcel – 27.30± Acres" as is shown on that certain Subdivision Map filed for record at Book "Y" of Maps at Page 94, Placer County Records, located in the City of Lincoln, County of Placer, State of California, and being a portion of Section 35, Township 12 N., Range 06 E., M.D.B& M., being more particularly described as follows:

Commencing at a railroad spike set in the cul–de–sac of Cottontail Court (Now Hope Court) along the centerline of said Court as is shown on the above referenced Subdivision Map from which a similar monument bears South 44°58'48" East 222.00 feet; thence from said point of commencement North 06°19'27" East 743.11 feet to the True Point of Beginning; thence from said True Point of Beginning North 28°40'56" West 60.00 feet; thence North 61°19'04" East 60.00 feet; thence South 28°40'56" East 60.00 feet; thence South 61°19'04" West 60.00 feet to the point of beginning.

Together with a non–exclusive easement for access and utility purposes twenty feet in width the centerline of which is described as follows: beginning at the midpoint on the Southeast boundary of the above described lease area and running thence South 36°44'17" East 10.10 feet to a point hereafter defined as Point "A"; thence continuing South 36°44'17" East 185.90 feet; thence through a tangent curve to the right having a central radius of 30.00 feet through an arc distance of 14.29 feet; thence tangent to the last curve South 09°26'20" East 174.34 feet; thence South 08°46'10" East 49.45 feet; thence through a tangent curve to the right having a central radius of 200.00 feet through an arc distance of 240.15 feet; thence tangent to the last curve South 60°01'39" West 119.51 feet; thence through a tangent curve to the left having a central radius of 50.00 feet through an arc distance of 27.47 feet; thence tangent to the last curve South 28°33'12" West 35.7 feet more or less to the public right of way more commonly known as Hope Court.

Also together with non–exclusive easements for access and utility purposes twenty feet in width the centerline of which are described as follows: beginning at Point "A" as previously defined and running from said point of beginning South 61°19'04" West 55.88 feet and also from said point of beginning North 61°19'04" East 64.12 feet. Also to include 40' centerline radius curves forming the hammerheads as are shown hereon.

DATE OF SURVEY: 12–14–23

SURVEYED BY OR UNDER DIRECTION OF: KENNETH D. GEIL, R.C.E. 14803

LOCATED IN THE COUNTY OF PLACER, STATE OF CALIFORNIA

BEARINGS SHOWN ARE BASED UPON MONUMENTS FOUND AND RECORD INFORMATION. THIS IS NOT A BOUNDARY SURVEY.

ELEVATIONS SHOWN ON THIS PLAN ARE BASED UPON U.S.G.S. N.A.V.D. 88 DATUM. ABOVE MEAN SEA LEVEL.

N.G.V.D. 1929 CORRECTION: SUBTRACT 2.38' FROM ELEVATIONS SHOWN.

CONTOUR INTERVAL: 1'

CONTRACTOR IS RESPONSIBLE TO VERIFY LEASE AREA PRIOR TO CONSTRUCTION.

ASSESSOR'S PARCEL NUMBER: 334–010–013–000
334–060–064–000

OWNER(S): CITY OF LINCOLN
640 5TH STREET
LINCOLN, CA 95648

Geil Engineering
Engineering * Surveying * Planning
1226 High Street
Auburn, California 95603–5015
Phone: (530) 885–0426 * Fax: (530) 823–1309

Vertical Bridge

Project Name: Prairie Point

Project Site Location: 2574 Eastridge Drive
Lincoln, CA 95648
Placer County

Date of Observation: 12–14–23

Equipment/Procedure Used to Obtain Coordinates: Trimble Pathfinder Pro XL post processed with Pathfinder Office software.

Type of Antenna Mount: Proposed Broadleaf Tower

Coordinates (Tower) (NAD83)
Latitude: N 38° 50' 42.22" N 38.845061°
Longitude: W 121° 16' 17.16" W 121.271433°

ELEVATION of Ground at Structure (NAVD88) 265' AMSL

CERTIFICATION: I, the undersigned, do hereby certify elevation listed above is based on a field survey done under my supervision and that the accuracy of those elevations meet or exceed 1–A Standards as defined in the FAA ASAC Information Sheet 91:003, and that they are true and accurate to the best of my knowledge and belief.

Kenneth D. Geil California RCE 14803

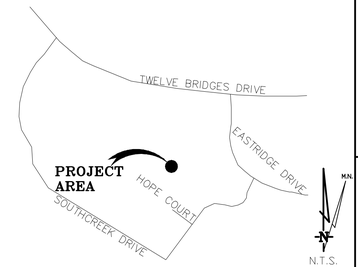

LINCOLN, CA

VICINITY MAP

BOUNDARY SHOWN IS BASED ON MONUMENTATION FOUND AND RECORD INFORMATION. THIS IS NOT A BOUNDARY SURVEY. THIS IS A SPECIALIZED TOPOGRAPHIC MAP WITH PROPERTY LINES AND EASEMENTS BEING A GRAPHIC DEPICTION BASED ON INFORMATION GATHERED FROM VARIOUS SOURCES OF RECORD AND AVAILABLE MONUMENTATION FOUND DURING THE FIELD SURVEY. NO EASEMENTS WERE RESEARCHED OR PLOTTED. PROPERTY LINES AND LINES OF TITLE WERE NOT INVESTIGATED NOR SURVEYED. NO PROPERTY MONUMENTS WERE SET.

THESE DRAWINGS AND/OR THE ACCOMPANYING SPECIFICATION AS INSTRUMENTS OF SERVICE, ARE THE EXCLUSIVE PROPERTY OF GEIL ENGINEERING AND THEIR USE AND PUBLICATION SHALL BE RESTRICTED TO THE ORIGINAL SITE AND CARRIER FOR WHICH THEY ARE PREPARED. REUSE, REPRODUCTION OR PUBLICATION BY ANY METHOD, IN WHOLE OR IN PART, IS PROHIBITED EXCEPT BY WRITTEN PERMISSION FROM GEIL ENGINEERING TITLE TO THESE PLANS AND/OR SPECIFICATIONS SHALL REMAIN WITH GEIL ENGINEERING WITHOUT PREJUDICE AND VISUAL CONTACT WITH THEM SHALL CONSTITUTE PRIMA FACIE EVIDENCE OF ACCEPTANCE OF THESE RESTRICTIONS.

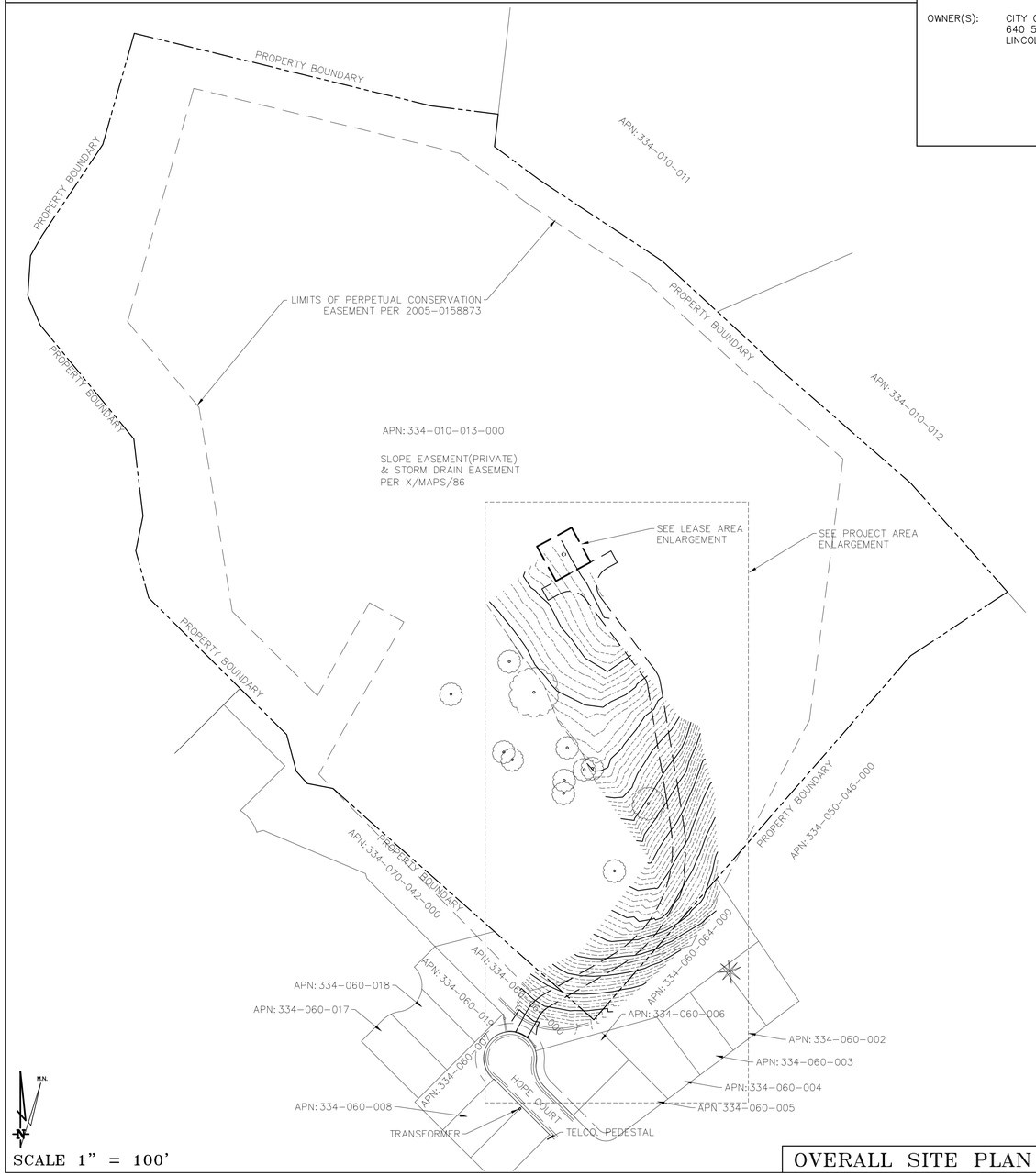

SCALE 1" = 100'

OVERALL SITE PLAN

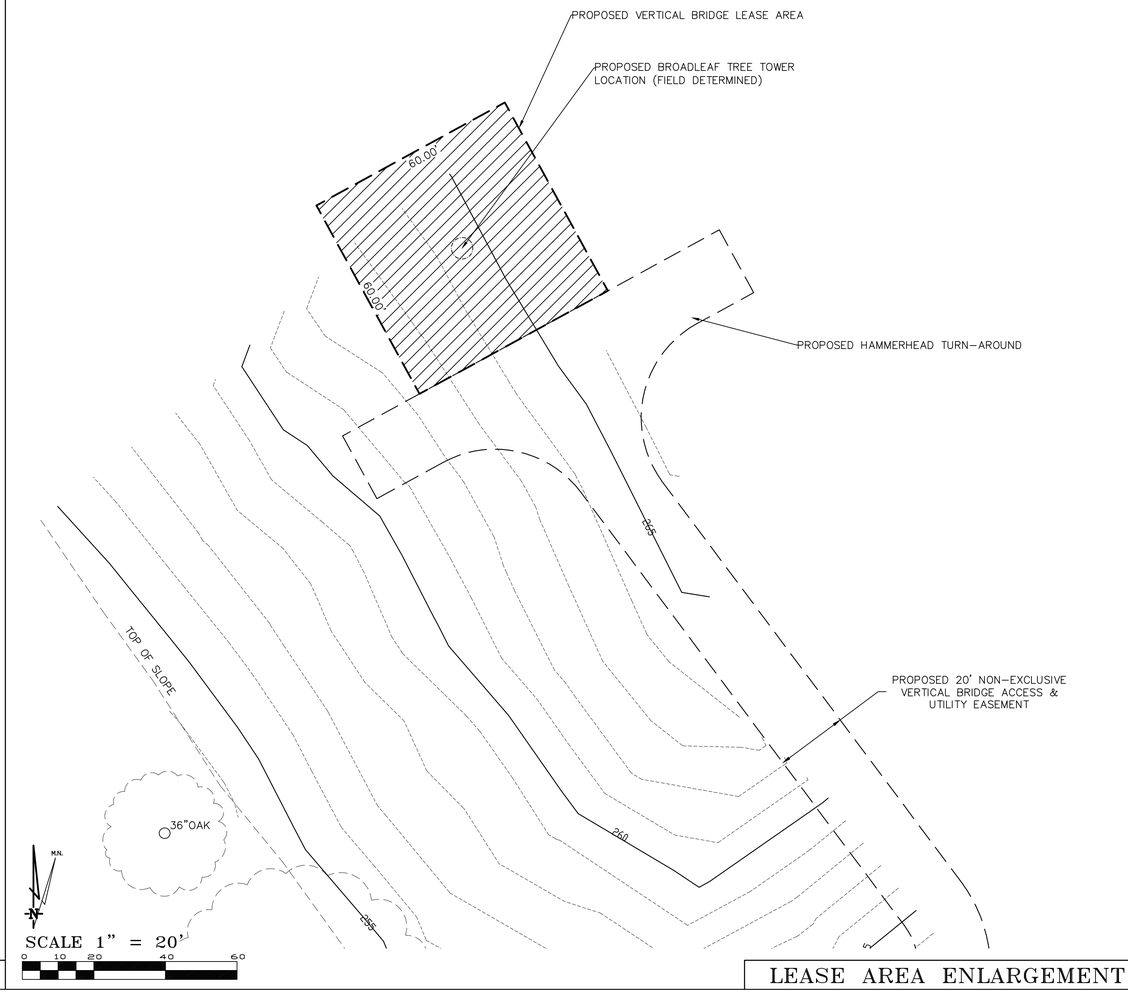

SCALE 1" = 20'

0 10 20 40 60

LEASE AREA ENLARGEMENT

DEPT	APPROVED	DATE
A&C		
RE		
RF		
INT		
EE\IN		
OPS		
EE\OUT		

Surveyor
GEIL ENGINEERING
ENGINEERING * SURVEYING * PLANNING
1226 HIGH STREET
AUBURN, CALIFORNIA 95603
Phone: (530) 885–0426
Fax: (530) 823–1309

verticalbridge

PRAIRIE POINT

2574 EASTRIDGE DRIVE
LINCOLN, CA 95648

PLOT PLAN AND
SITE TOPOGRAPHY

REVISIONS		
REV	12–18–23 N. ROHDE	DRAWING SUBMITTAL
REV	01–12–24 N. ROHDE	TITLE WORK
REV	05–29–25 N. ROHDE	NAME CHANGE
REV	07–31–25 N. ROHDE	LEASE AREA MOD.
REV		

Sheet
C–1

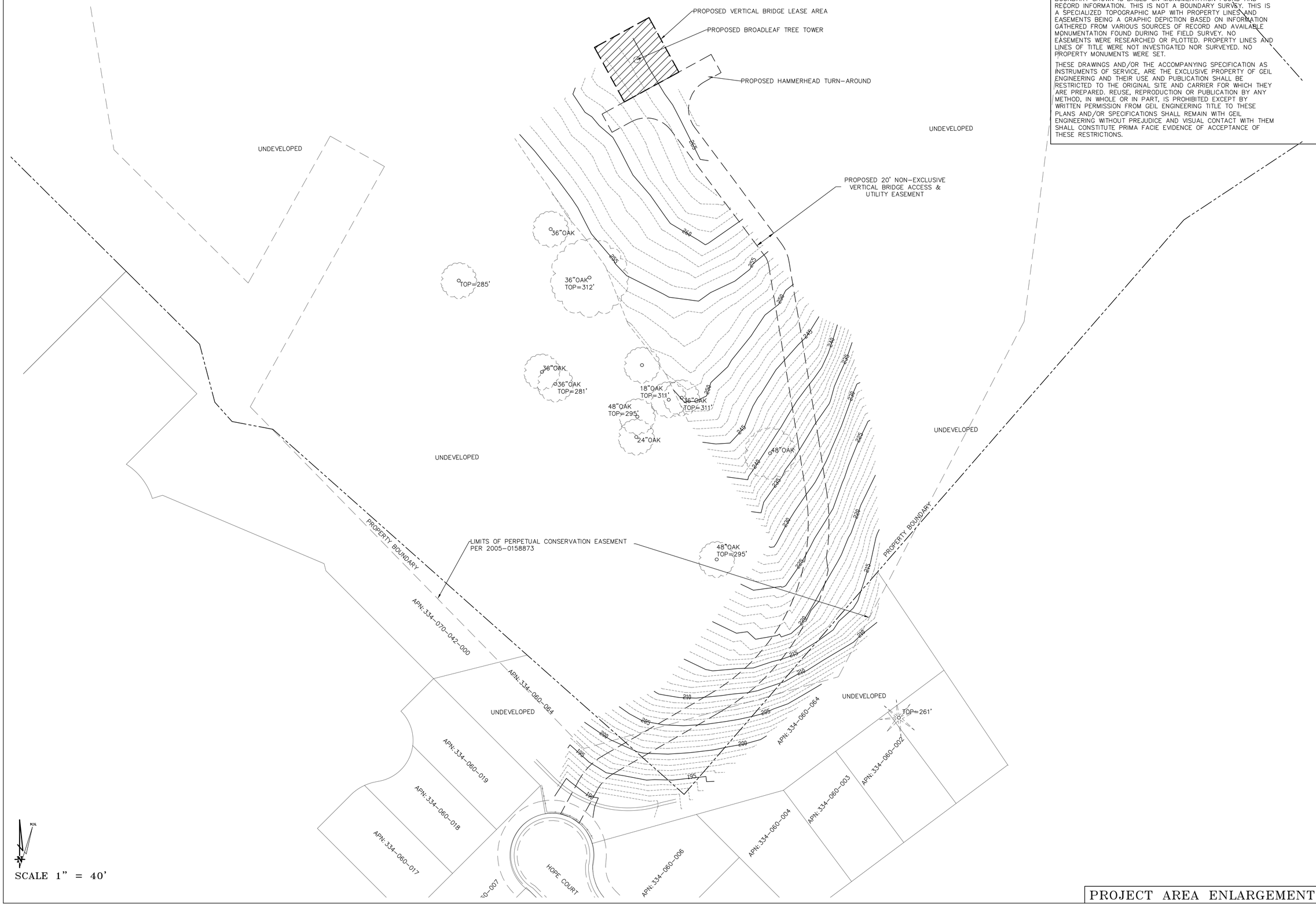

BOUNDARY SHOWN IS BASED ON MONUMENTATION FOUND AND RECORD INFORMATION. THIS IS NOT A BOUNDARY SURVEY. THIS IS A SPECIALIZED TOPOGRAPHIC MAP WITH PROPERTY LINES AND EASEMENTS BEING A GRAPHIC DEPICTION BASED ON INFORMATION GATHERED FROM VARIOUS SOURCES OF RECORD AND AVAILABLE MONUMENTATION FOUND DURING THE FIELD SURVEY. NO EASEMENTS WERE RESEARCHED OR PLOTTED. PROPERTY LINES AND LINES OF TITLE WERE NOT INVESTIGATED NOR SURVEYED. NO PROPERTY MONUMENTS WERE SET.

THESE DRAWINGS AND/OR THE ACCOMPANYING SPECIFICATION AS INSTRUMENTS OF SERVICE, ARE THE EXCLUSIVE PROPERTY OF GEIL ENGINEERING AND THEIR USE AND PUBLICATION SHALL BE RESTRICTED TO THE ORIGINAL SITE AND CARRIER FOR WHICH THEY ARE PREPARED. REUSE, REPRODUCTION OR PUBLICATION BY ANY METHOD, IN WHOLE OR IN PART, IS PROHIBITED EXCEPT BY WRITTEN PERMISSION FROM GEIL ENGINEERING TITLE TO THESE PLANS AND/OR SPECIFICATIONS SHALL REMAIN WITH GEIL ENGINEERING WITHOUT PREJUDICE AND VISUAL CONTACT WITH THEM SHALL CONSTITUTE PRIMA FACIE EVIDENCE OF ACCEPTANCE OF THESE RESTRICTIONS.

DEPT	APPROVED	DATE
A&C		
RE		
RF		
INT		
EE\IN		
OPS		
EE\OUT		

Surveyor
GEIL ENGINEERING
ENGINEERING • SURVEYING • PLANNING
1228 HIGH STREET
AUBURN, CALIFORNIA 95603
Phone: (530) 885-0426
Fax: (530) 823-1309

verticalbridge

PRAIRIE POINT
2574 EASTRIDGE DRIVE
LINCOLN, CA 95648
PLOT PLAN AND
SITE TOPOGRAPHY

Sheet
C-2

SCALE 1" = 40'

PROJECT AREA ENLARGEMENT

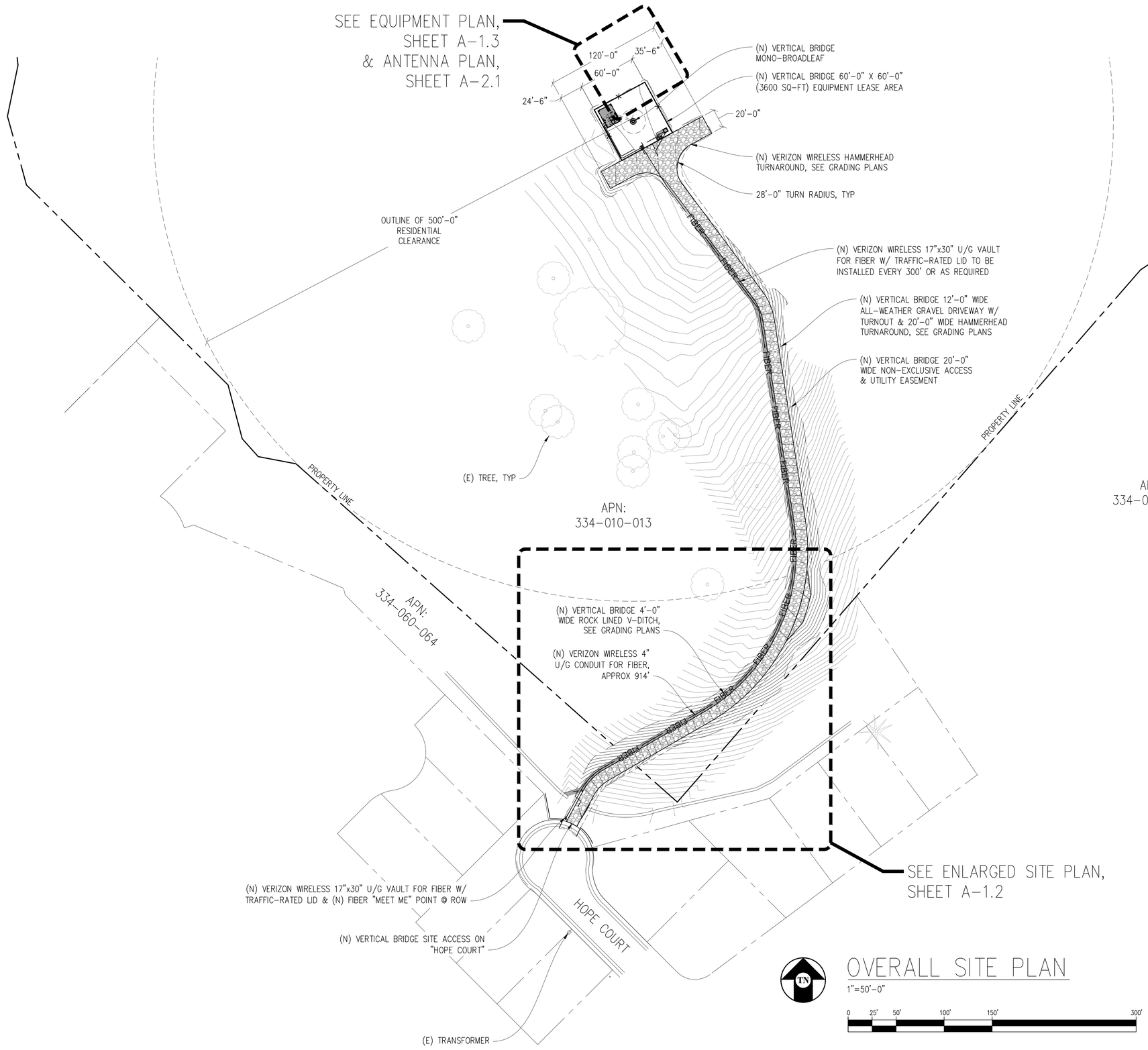

OVERALL SITE PLAN

1"=50'-0"

0 25' 50' 100' 150' 300'

vertical bridge

verizon

2770 SHADELANDS DR, BLDG 11
WALNUT CREEK, CA 94598

ENGINEER:

Streamline Engineering and Design, Inc.

3843 TAYLOR ROAD, SUITE A, LOOMIS, CA 95650
Contact: Kevin Sorensen Phone: 916-660-1930
E-Mail: kevin@streamlineeng.com Fax: 916-660-1941

THESE PLANS AND SPECIFICATIONS, AS INSTRUMENTS OF SERVICE, ARE AND SHALL REMAIN THE PROPERTY OF STREAMLINE ENGINEERING AND DESIGN INC. WHETHER THE PROJECTS FOR WHICH THEY ARE MADE ARE EXECUTED OR NOT. THESE DRAWINGS AND SPECIFICATIONS SHALL NOT BE USED BY ANY PERSON OR ENTITY ON OTHER PROJECTS WITH OUT PRIOR WRITTEN CONSENT OF THE ENGINEER. Copyright © 2009, STREAMLINE ENGINEERING AND DESIGN INC. ALL RIGHTS RESERVED

REV	SUBMITTAL/REVISION	CAD	DATE
7	CLIENT REV	T.T.	07/29/25
6	CLIENT REV	D.H.	06/18/25
5	CLIENT REV	J.Z.	05/30/25
4	CLIENT REV	D.H.	08/13/24
3	CLIENT REV	S.V.	04/10/24
2	CLIENT REV	T.K.	02/28/24

DRAWN: SEAD
CHECKED: S. SAVIG
APPROVED: -

PROJECT NUMBER: US-CA-7349

PROJECT TITLE:

PRAIRIE POINT

2574 EASTRIDGE DRIVE
LINCOLN, CA 95648

ENGINEER STAMP:

PRELIMINARY: NOT FOR CONSTRUCTION

KEVIN R. SORENSEN
S4469

DRAWING TITLE:

OVERALL SITE PLAN

Drawing Scale: AS NOTED
Date: 07/29/2025

ZD

IT IS A VIOLATION OF LAW FOR ANY PERSON, UNLESS THEY ARE ACTING UNDER THE DIRECTION OF A LICENSED PROFESSIONAL ENGINEER, TO ALTER THIS DOCUMENT.

DRAWING NUMBER:

A-1.1

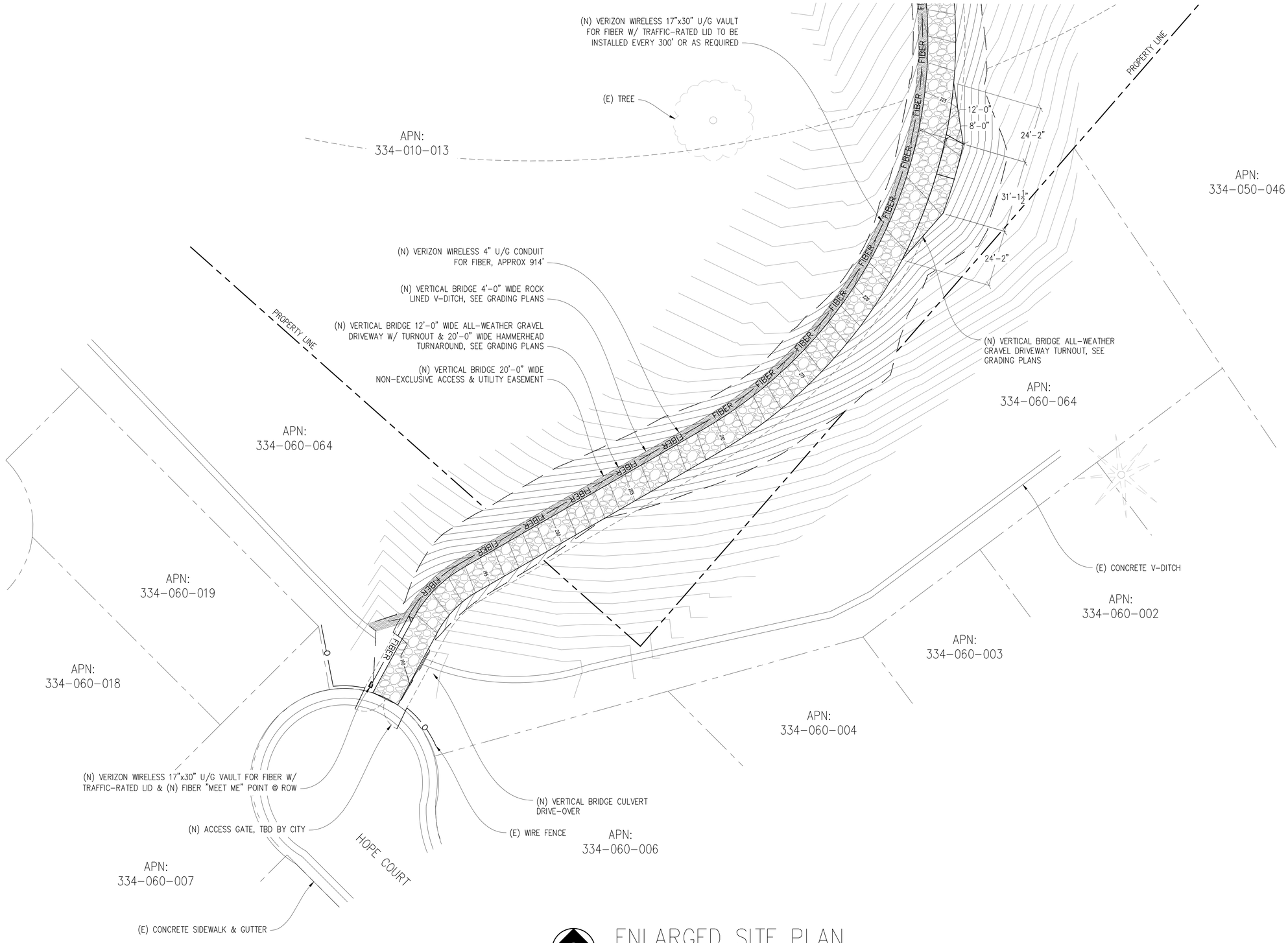

ENLARGED SITE PLAN

1"=20'-0"

0 10' 20' 40' 60' 100'

vertical bridge

verizon

2770 SHADELANDS DR, BLDG 11
WALNUT CREEK, CA 94598

ENGINEER:

Streamline Engineering and Design, Inc.

3843 TAYLOR ROAD, SUITE A, LOOMIS, CA 95650
Contact: Kevin Sorensen Phone: 916-660-1930
E-Mail: kevin@streamlineeng.com Fax: 916-660-1941

THESE PLANS AND SPECIFICATIONS, AS INSTRUMENTS OF SERVICE, ARE AND SHALL REMAIN THE PROPERTY OF STREAMLINE ENGINEERING AND DESIGN INC. WHETHER THE PROJECTS FOR WHICH THEY ARE MADE ARE EXECUTED OR NOT. THESE DRAWINGS AND SPECIFICATIONS SHALL NOT BE USED BY ANY PERSON OR ENTITY ON OTHER PROJECTS WITH OUT PRIOR WRITTEN CONSENT OF THE ENGINEER. Copyright © 2020, STREAMLINE ENGINEERING AND DESIGN INC. ALL RIGHTS RESERVED

REV	SUBMITTAL/REVISION	CAD	DATE
7	CLIENT REV	T.T.	07/29/25
6	CLIENT REV	D.H.	06/18/25
5	CLIENT REV	J.Z.	05/30/25
4	CLIENT REV	D.H.	08/13/24
3	CLIENT REV	S.V.	04/10/24
2	CLIENT REV	T.K.	02/28/24

DRAWN: SEAD
CHECKED: S. SAVIG
APPROVED: -

PROJECT NUMBER: US-CA-7349

PROJECT TITLE:

PRAIRIE POINT

2574 EASTRIDGE DRIVE
LINCOLN, CA 95648

ENGINEER STAMP:

PRELIMINARY: NOT FOR CONSTRUCTION

KEVIN R. SORENSEN
S4469

DRAWING TITLE:

ENLARGED SITE PLAN

Drawing Scale: AS NOTED
Date: 07/29/2025

ZD

IT IS A VIOLATION OF LAW FOR ANY PERSON, UNLESS THEY ARE ACTING UNDER THE DIRECTION OF A LICENSED PROFESSIONAL ENGINEER, TO ALTER THIS DOCUMENT.

DRAWING NUMBER:

A-1.2

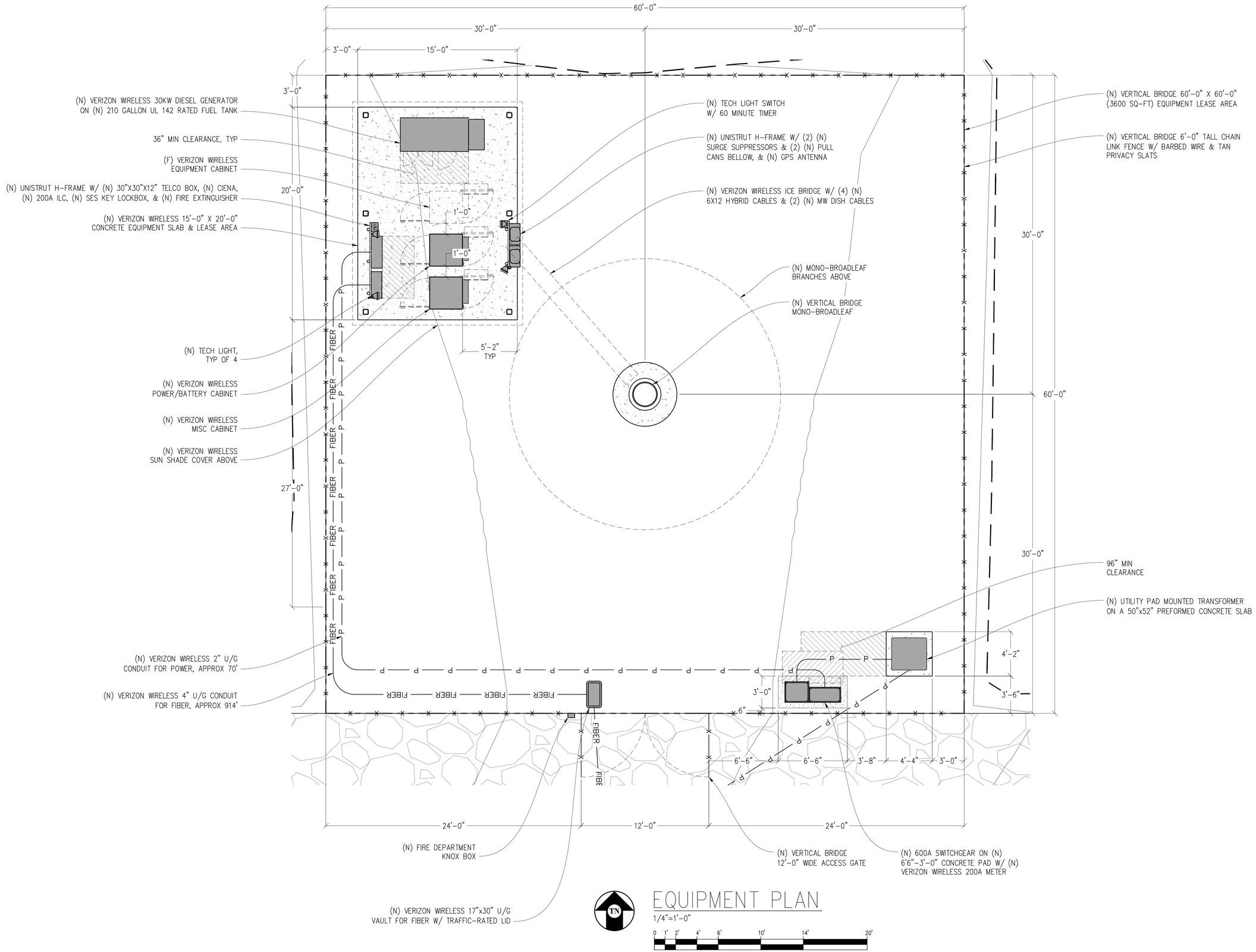

EQUIPMENT PLAN

1/4"=1'-0"

0 1' 2' 4' 6' 10' 14' 20'

vertical bridge

verizon

2770 SHADELANDS DR, BLDG 11
WALNUT CREEK, CA 94598

ENGINEER:

StreamLine Engineering and Design, Inc.

3843 TAYLOR ROAD, SUITE A, LOOMIS, CA 95650
Contact: Kevin Sorensen Phone: 916-660-1930
E-Mail: kevin@streamlineeng.com Fax: 916-660-1941

THESE PLANS AND SPECIFICATIONS, AS INSTRUMENTS OF SERVICE, ARE AND SHALL REMAIN THE PROPERTY OF STREAMLINE ENGINEERING AND DESIGN INC. WHETHER THE PROJECTS FOR WHICH THEY ARE MADE ARE EXECUTED OR NOT. THESE DRAWINGS AND SPECIFICATIONS SHALL NOT BE USED BY ANY PERSON OR ENTITY ON OTHER PROJECTS WITH OUT PRIOR WRITTEN CONSENT OF THE ENGINEER. Copyright © 2009, STREAMLINE ENGINEERING AND DESIGN INC. ALL RIGHTS RESERVED

REV	SUBMITTAL/REVISION	CAD	DATE
7	CLIENT REV	T.T.	07/29/25
6	CLIENT REV	D.H.	06/18/25
5	CLIENT REV	J.Z.	05/30/25
4	CLIENT REV	D.H.	08/13/24
3	CLIENT REV	S.V.	04/10/24
2	CLIENT REV	T.K.	02/28/24

DRAWN: SEAD
CHECKED: S. SAVIG
APPROVED: -

PROJECT NUMBER: US-CA-7349

PROJECT TITLE:

PRAIRIE POINT

2574 EASTRIDGE DRIVE
LINCOLN, CA 95648

ENGINEER STAMP:

PRELIMINARY: NOT FOR CONSTRUCTION

KEVIN R. SORENSEN
S4469

DRAWING TITLE:

EQUIPMENT PLAN

Drawing Scale: AS NOTED

Date: 07/29/2025

ZD

IT IS A VIOLATION OF LAW FOR ANY PERSON, UNLESS THEY ARE ACTING UNDER THE DIRECTION OF A LICENSED PROFESSIONAL ENGINEER, TO ALTER THIS DOCUMENT.

DRAWING NUMBER:

A-1.3

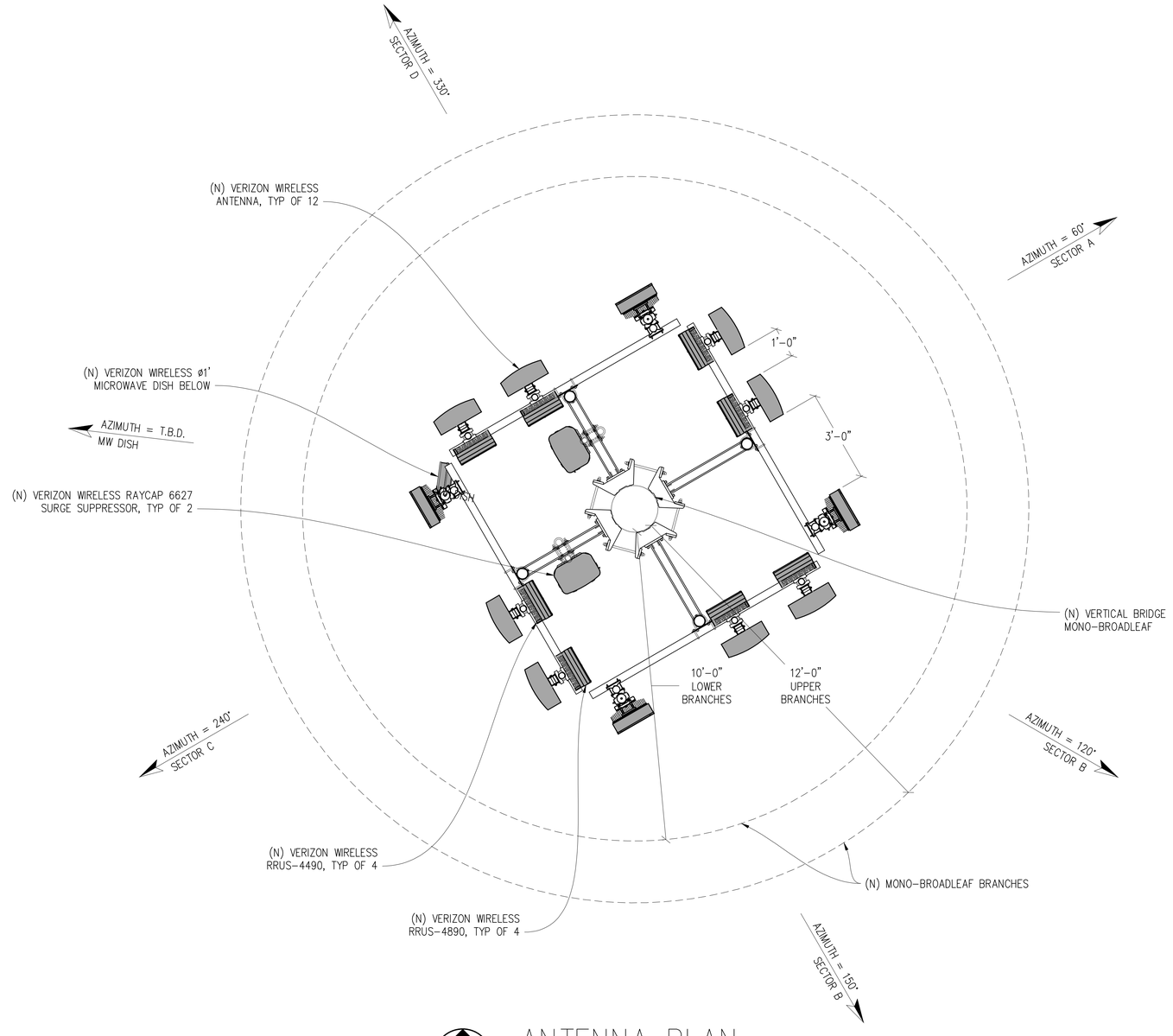

ANTENNA PLAN

½"=1'-0"

0 6" 1' 2' 3' 5' 7' 10'

vertical bridge

verizon

2770 SHADELANDS DR, BLDG 11
WALNUT CREEK, CA 94598

ENGINEER:

Streamline Engineering and Design, Inc.

3843 TAYLOR ROAD, SUITE A, LOOMIS, CA 95650
Contact: Kevin Sorensen Phone: 916-660-1930
E-Mail: kevin@streamlineeng.com Fax: 916-660-1941

THESE PLANS AND SPECIFICATIONS, AS INSTRUMENTS OF SERVICE, ARE AND SHALL REMAIN THE PROPERTY OF STREAMLINE ENGINEERING AND DESIGN INC. WHETHER THE PROJECTS FOR WHICH THEY ARE MADE ARE EXECUTED OR NOT. THESE DRAWINGS AND SPECIFICATIONS SHALL NOT BE USED BY ANY PERSON OR ENTITY ON OTHER PROJECTS WITH OUT PRIOR WRITTEN CONSENT OF THE ENGINEER. Copyright © 2009, STREAMLINE ENGINEERING AND DESIGN INC. ALL RIGHTS RESERVED

REV	SUBMITTAL/REVISION	CAD	DATE
7	CLIENT REV	T.T.	07/29/25
6	CLIENT REV	D.H.	06/18/25
5	CLIENT REV	J.Z.	05/30/25
4	CLIENT REV	D.H.	08/13/24
3	CLIENT REV	S.V.	04/10/24
2	CLIENT REV	T.K.	02/28/24

DRAWN: SEAD
CHECKED: S. SAVIG
APPROVED: -

PROJECT NUMBER: US-CA-7349

PROJECT TITLE:

PRAIRIE POINT

2574 EASTRIDGE DRIVE
LINCOLN, CA 95648

ENGINEER STAMP:

PRELIMINARY:
NOT FOR
CONSTRUCTION

KEVIN R. SORENSEN
S4469

DRAWING TITLE:

ANTENNA PLAN

Drawing Scale: AS NOTED

Date: 07/29/2025

ZD

IT IS A VIOLATION OF LAW FOR ANY PERSON, UNLESS THEY ARE ACTING UNDER THE DIRECTION OF A LICENSED PROFESSIONAL ENGINEER, TO ALTER THIS DOCUMENT.

DRAWING NUMBER:

A-2.1

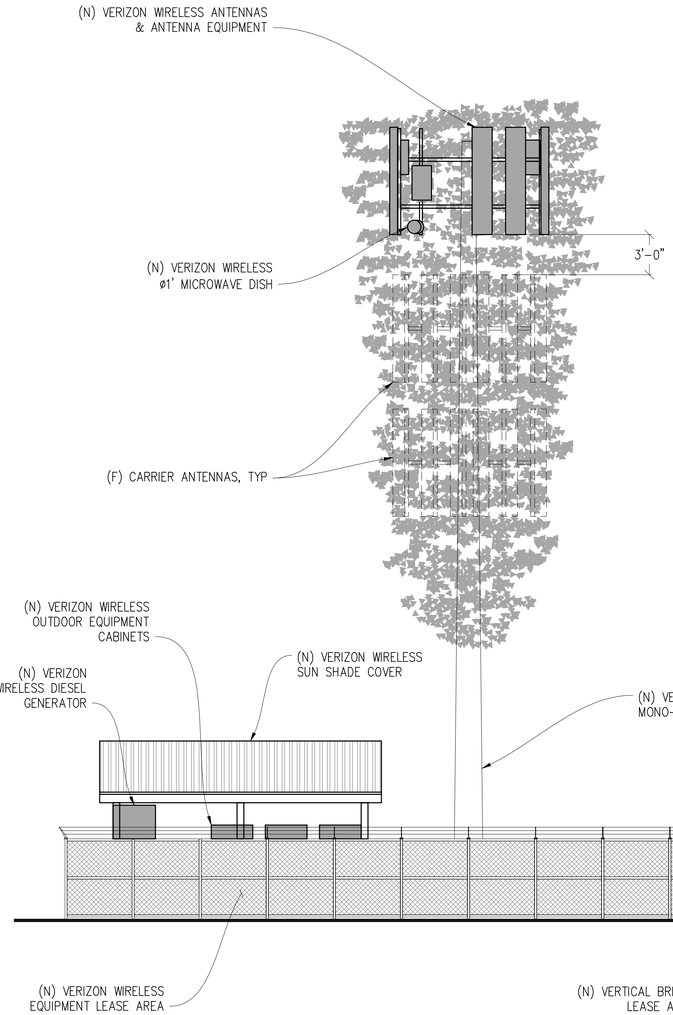

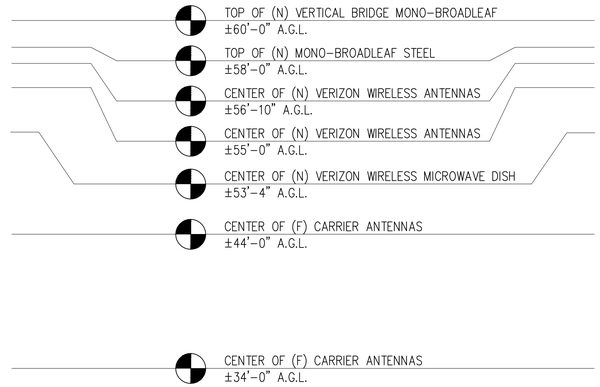

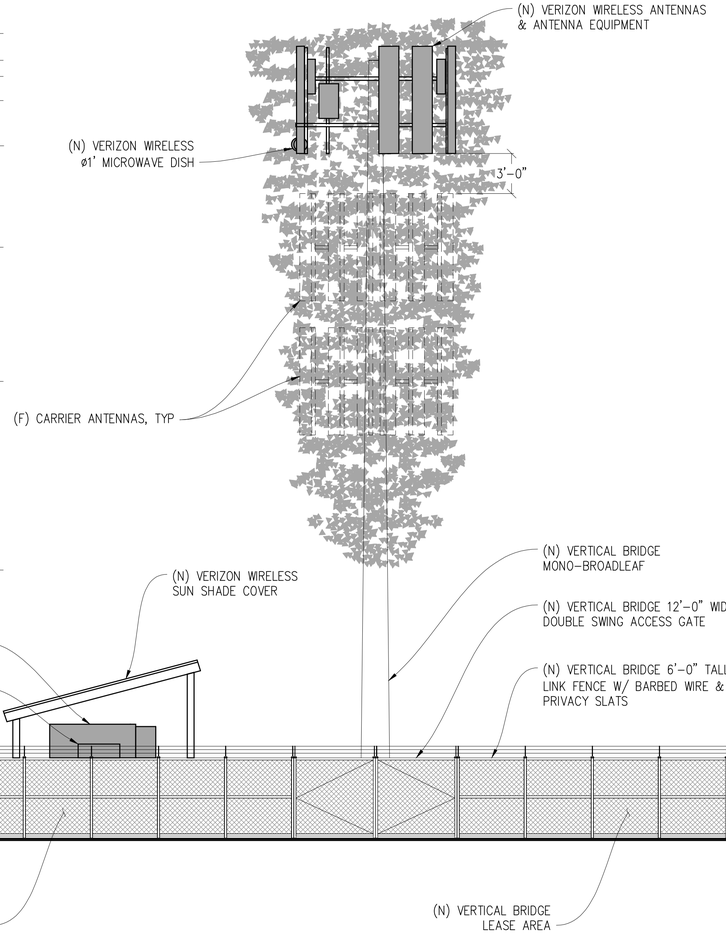

SOUTHWEST ELEVATION

3/16"=1'-0"

0 6" 1' 2' 3' 5' 7' 11' 15'

SOUTHEAST ELEVATION

3/16"=1'-0"

0 6" 1' 2' 3' 5' 7' 11' 15'

vertical bridge

verizon

2770 SHADELANDS DR, BLDG 11
WALNUT CREEK, CA 94598

ENGINEER:

Streamline Engineering and Design, Inc.

3843 TAYLOR ROAD, SUITE A, LOOMIS, CA 95650
Contact: Kevin Sorensen Phone: 916-660-1930
E-Mail: kevin@streamlineeng.com Fax: 916-660-1941

THESE PLANS AND SPECIFICATIONS, AS INSTRUMENTS OF SERVICE, ARE AND SHALL REMAIN THE PROPERTY OF STREAMLINE ENGINEERING AND DESIGN INC. WHETHER THE PROJECTS FOR WHICH THEY ARE MADE ARE EXECUTED OR NOT. THESE DRAWINGS AND SPECIFICATIONS SHALL NOT BE USED BY ANY PERSON OR ENTITY ON OTHER PROJECTS WITH OUT PRIOR WRITTEN CONSENT OF THE ENGINEER. Copyright © 2020, STREAMLINE ENGINEERING AND DESIGN INC. ALL RIGHTS RESERVED

REV	SUBMITTAL/REVISION	CAD	DATE
7	CLIENT REV	T.T.	07/29/25
6	CLIENT REV	D.H.	06/18/25
5	CLIENT REV	J.Z.	05/30/25
4	CLIENT REV	D.H.	08/13/24
3	CLIENT REV	S.V.	04/10/24
2	CLIENT REV	T.K.	02/28/24

DRAWN: SEAD
CHECKED: S. SAVIG
APPROVED: -

PROJECT NUMBER: US-CA-7349

PROJECT TITLE:

PRAIRIE POINT

2574 EASTRIDGE DRIVE
LINCOLN, CA 95648

ENGINEER STAMP:

PRELIMINARY: NOT FOR CONSTRUCTION

KEVIN R. SORENSEN
S4469

DRAWING TITLE:

ELEVATIONS

Drawing Scale: AS NOTED
Date: 07/29/2025

ZD

IT IS A VIOLATION OF LAW FOR ANY PERSON, UNLESS THEY ARE ACTING UNDER THE DIRECTION OF A LICENSED PROFESSIONAL ENGINEER, TO ALTER THIS DOCUMENT.

DRAWING NUMBER:

A-3.1

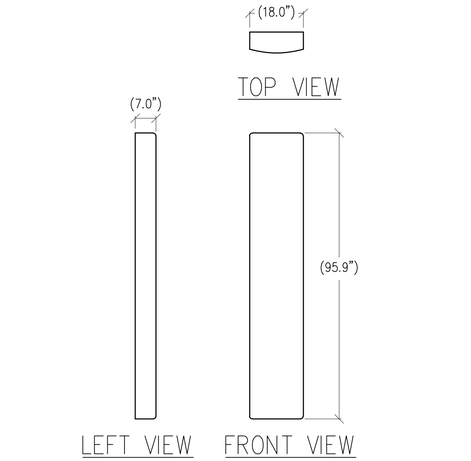

1 ANTENNA DETAIL

½"=1' MAX WEIGHT: 81.1 LBS

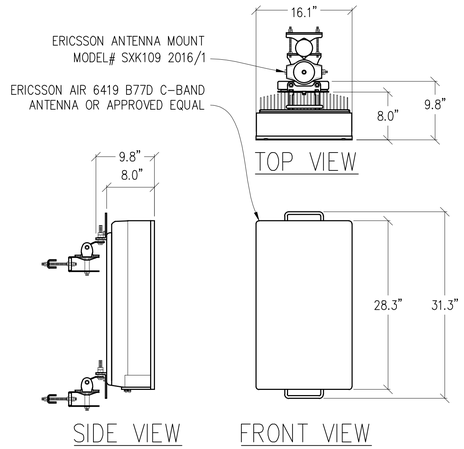

2 ANTENNA DETAIL

1"=1'-0" MAX WEIGHT: 71 LBS

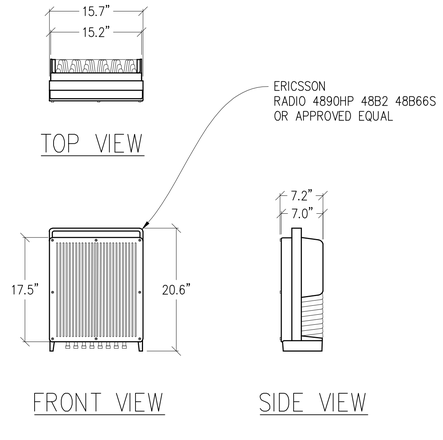

3 RADIO 4890HP DETAIL

1"=1'-0" MAX WEIGHT: 69.5 LBS

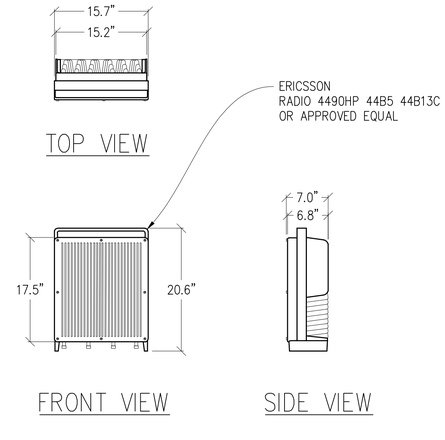

4 RADIO 4490HP DETAIL

1"=1'-0" MAX WEIGHT: 68.4 LBS

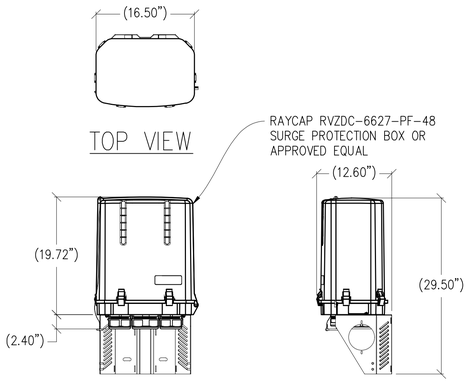

5 SURGE PROTECTION BOX

1"=1'-0" MAX WEIGHT: 32.0 LBS

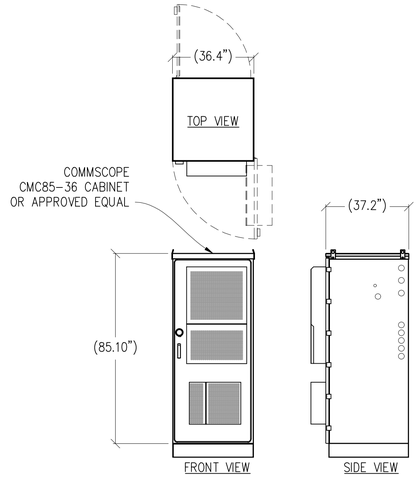

6 CABINET DETAIL

⅜"=1'-0" MAX WEIGHT: 2352 LBS

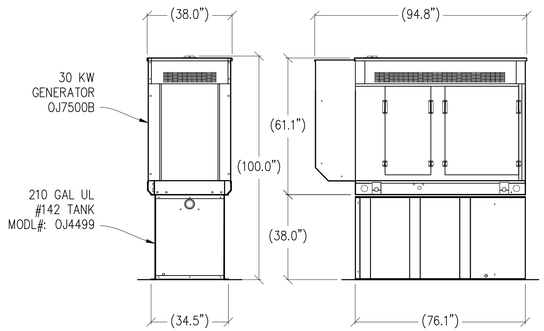

7 30KW GENERATOR DETAIL

⅜"=1'-0" MAX WEIGHT: 3,119 LBS

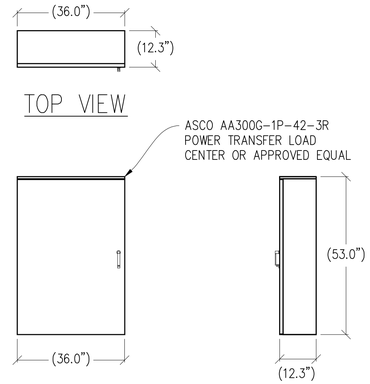

8 ILC CABINET DETAIL

½"=1'-0" MAX WEIGHT: 210 LBS

vertical bridge

verizon

2770 SHADELANDS DR, BLDG 11
WALNUT CREEK, CA 94598

ENGINEER:

Streamline Engineering and Design, Inc.

3843 TAYLOR ROAD, SUITE A, LOOMIS, CA 95650
Contact: Kevin Sorensen Phone: 916-660-1930
E-Mail: kevin@streamlineeng.com Fax: 916-660-1941

THESE PLANS AND SPECIFICATIONS, AS INSTRUMENTS OF SERVICE, ARE AND SHALL REMAIN THE PROPERTY OF STREAMLINE ENGINEERING AND DESIGN INC. WHETHER THE PROJECTS FOR WHICH THEY ARE MADE ARE EXECUTED OR NOT. THESE DRAWINGS AND SPECIFICATIONS SHALL NOT BE USED BY ANY PERSON OR ENTITY ON OTHER PROJECTS WITH OUT PRIOR WRITTEN CONSENT OF THE ENGINEER. Copyright © 2020, STREAMLINE ENGINEERING AND DESIGN INC. ALL RIGHTS RESERVED

REV	SUBMITTAL/REVISION	CAD	DATE
7	CLIENT REV	T.T.	07/29/25
6	CLIENT REV	D.H.	06/18/25
5	CLIENT REV	J.Z.	05/30/25
4	CLIENT REV	D.H.	08/13/24
3	CLIENT REV	S.V.	04/10/24
2	CLIENT REV	T.K.	02/28/24

DRAWN: SEAD
CHECKED: S. SAVIG
APPROVED: -

PROJECT NUMBER: US-CA-7349

PROJECT TITLE:

PRAIRIE POINT

2574 EASTRIDGE DRIVE
LINCOLN, CA 95648

ENGINEER STAMP:

PRELIMINARY:
NOT FOR
CONSTRUCTION

KEVIN R. SORENSEN
S4469

DRAWING TITLE:

DETAILS

Drawing Scale: AS NOTED
Date: 07/29/2025

ZD

IT IS A VIOLATION OF LAW FOR ANY PERSON, UNLESS THEY ARE ACTING UNDER THE DIRECTION OF A LICENSED PROFESSIONAL ENGINEER, TO ALTER THIS DOCUMENT.

DRAWING NUMBER:

A-4.1

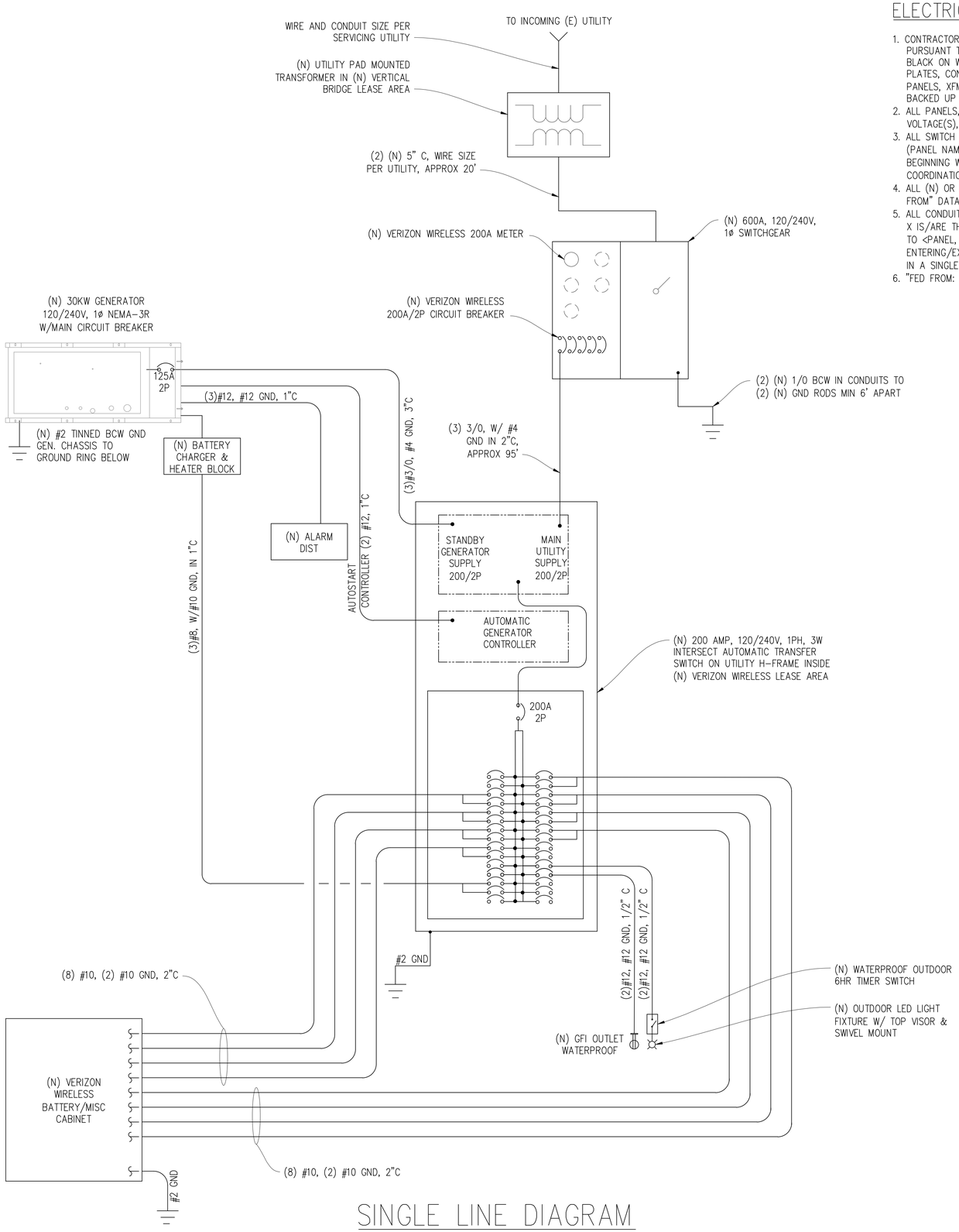

SINGLE LINE DIAGRAM

ELECTRICAL LABELING REQUIREMENTS

1. CONTRACTOR SHALL LABEL ALL ELECTRICAL DEVICES INSTALLED OR ALTERED PURSUANT TO THIS CONTRACT PER THE FOLLOWING. LABELS SHALL BE PERMANENT BLACK ON WHITE PEEL & STICK LABEL MAKER TYPE FOR ALL SWITCH & OUTLET PLATES, CONDUITS AND CEILING FIXTURES, AND SHALL BE PHENOLIC TAG TYPE FOR PANELS, XFMR's, PULL BOXES, ETC.; PHENOLIC TAGS SHALL BE RED IN COLOR WHERE BACKED UP BY GENERATOR
2. ALL PANELS, XFMR's AND PULL BOXES SHALL BE LABELED WITH DEVICE 'NAME', VOLTAGE(S), RATING FOR XFMR's, AND "FED FROM" DATA.
3. ALL SWITCH & OUTLET PLATES SHALL BE LABELED WITH "FED FROM" CIRCUIT DATA (PANEL NAME & CIRCUIT#); ALL GANG SWITCHES SHALL BEAR SWITCH NUMBERS BEGINNING W/#1 ON LEFT OF THE MAIN LIGHTING SWITCH FOR EACH ROOM FOR COORDINATION W/FIXTURE LABELS.
4. ALL (N) OR RETROFITTED LIGHTING FIXTURES SHALL BE LABELED WITH THE "FED FROM" DATA (SWITCH#)
5. ALL CONDUITS EXITING A PANEL BOARD SHALL BE LABELED "CIRCUIT(S) 'X'..." WHERE X IS/ARE THE BREAKER#(S). CONDUITS EXITING XFMR'S SHALL BE LABELED "FEEDER TO <PANEL, DEVICE>", E.G. "FEEDER TO PANEL <panel name>. CONDUITS ENTERING/EXITING A ROOM OR FLOOR SHALL BE LABELED AT THE ENTRY & EXIT (OR IN A SINGLE LOCATION IF OBVIOUS) W/"FED FROM..." & "TO PANEL/XFMR/..."DATA.
6. "FED FROM: DATA = <panel name> <brkr#> EG: "PANEL X/1,3,5")

ELECTRIC LEGEND

- METER
- CIRCUIT BREAKER
- SERVICE GROUND
- WIRED CONNECTION
- TIMER SWITCH, WATERPROOF
- OUTDOOR LIGHT
- GFI OUTLET, WATERPROOF

ELECTRICAL NOTES

1. ALL ELECTRICAL WORK SHALL CONFORM TO THE 2017 IEC AS WELL AS ALL ADOPTED STANDARDS, APPLICABLE STATE AND LOCAL CODES.
2. CONTRACTOR SHALL FURNISH AND INSTALL ALL CONDUIT, CONDUCTORS, PULL BOXES, TRANSFORMER PADS, POLE RISERS, AND PERFORM ALL TRENCHING AND BACKFILLING REQUIRED IN THE PLANS.
3. ALL ELECTRICAL ITEMS SHALL BE U.L. APPROVED OR LISTED AND PROCURED PER PLAN SPECIFICATIONS.
4. ALL CIRCUIT BREAKERS, FUSES, AND ELECTRICAL EQUIPMENT SHALL HAVE AN INTERRUPTION RATING NOT LESS THAN THE MAXIMUM SHORT CIRCUIT CURRENT TO WHICH THEY MAY BE SUBJECTED WITH A MINIMUM OF 10,000 A.I.C. OR AS REQUIRED.
5. THE ENTIRE ELECTRICAL INSTALLATION SHALL BE GROUNDED AS REQUIRED BY ALL APPLICABLE CODES.
6. ELECTRICAL WIRING SHALL BE COPPER #12 AWG MIN WITH TYPE THHN, THWN-2 OR THW-2, INSULATION RATED FOR 90°C DRY OR 70°C WET.
7. ALL OUTDOOR EQUIPMENT SHALL HAVE NEMA 3R ENCLOSURE.
8. ALL BURIED WIRE SHALL RUN THROUGH SCHEDULE 40 PVC CONDUIT UNLESS OTHERWISE NOTED.
9. A GROUND WIRE IS TO BE PULLED IN ALL CONDUITS.
10. WHERE ELECTRICAL WIRING OCCURS OUTSIDE A STRUCTURE AND HAS THE POTENTIAL FOR EXPOSURE TO WEATHER, WIRING SHALL BE IN WATERTIGHT GALVANIZED RIGID STEEL OR FLEXIBLE CONDUIT.
11. WHERE PLANS CALL FOR A NEW ELECTRICAL SERVICE, PRIOR TO SUBMITTING BID, CONTRACTOR SHALL VERIFY PLAN DETAILS WITH THE UTILITY'S SERVICE PLAN & REQ'MTS INCLUDING SERVICE VOLTAGE, METER LOCATION, MAIN DISCONNECTING MEANS, AND AIC REQ'MT, AND SHALL OBTAIN CLARIFICATION FROM THE PROJECT ENGINEER ON ANY DEVIATIONS FOUND IN THESE PLANS.
12. WHERE THESE PLANS SHOW A DC POWER PLANT, THE INSTALLATION OPERATING AT LESS THAN 50 VDC UNGROUNDED, 2-WIRE, SHALL COMPLY WITH ARTICLE 720, AS FOLLOWS:
    - A. POWER PLANT SHALL BE SUPPLIED BY THE WIRELESS CARRIER AS A PULL-TAG ITEM AND INSTALLED BY THE CONTRACTOR.
    - B. CONDUCTORS SHALL NOT BE SMALLER THAN #12 AWG COPPER MIN, CONDUCTORS FOR BRANCH CIRCUITS SUPPLYING MORE THAN ONE APPLIANCE SHALL BE 10 AWG CU MIN; CONTRACTOR SHALL SIZE CONDUCTORS BASED ON MFGR'S DATA FOR THE APPLIANCES SERVED.
    - C. THERE ARE NO DC RECEPTACLES OR LUMINARIES ALLOWED ON THIS PROJECT. ALL CIRCUITS SHALL ORIGINATE AT AN INTEGRATED DOUBLE LUG TAP OR SOCKET TERMINATION ON AN INTEGRATED DC CIRCUIT BREAKER AT AN INDIVIDUAL RECTIFIER MODULE AND TERMINATE AT THE SPECIALIZED LUG ON THE RESPECTIVE APPLIANCE AS A SINGLE RUN OF WIRE WITHOUT SPLICES. ALL DC WIRING SHALL BE LABELED AT THE DC PLANT WITH THE APPLIANCE SERVED AND THE DC VOLTAGE.
    - D. ALL CABLING SHALL BE INSTALLED IN A NEAT AND WORKMAN LIKE MANNER AND SUPPORTED BY BUILDING STRUCTURE, EG. (N) CABLE TRAY OVERHEAD, IN SUCH A MANNER THAT THE CABLE WILL NOT BE DAMAGED BY NORMAL USE.

NEW PANEL SCHEDULE

NAMEPLATE : PANEL A			SC LEVEL : 65,000				VOLTS: 120V/240V, 1ø		
LOCATION : OUTSIDE							BUS AMPS: 200A		
MOUNTING : H-FRAME							MAIN CB: 200A		
øA	øB							øA	øB
LOAD VA	LOAD VA	LOAD DESCRIPTION	BKR AMP/ POLE	CIRCUIT NO		BKR AMP/ POLE	LOAD DESCRIPTION	LOAD VA	LOAD VA
		BLANK	–	1	2	30/2	(N) BATTERY/MISC CABINET	1320	
		" "	–	3	4	" "	" "		1320
		" "	–	5	6	30/2	" "	1320	
		" "	–	7	8	" "	" "		1320
1320		(N) BATTERY/MISC CABINET	30/2	9	10	30/2	" "	1320	
	1320	" "	" "	11	12	" "	" "		1320
1320		" "	30/2	13	14	30/2	" "	1320	
	1320	" "	" "	15	16	" "	" "		1320
1320		" "	30/2	17	18	–	BLANK		
	1320	" "	" "	19	20	–	" "		
1320		" "	30/2	21	22	–	" "		
	1320	" "	" "	23	24	–	" "		
1000		BLOCK HEATER	20/1	25	26	–	" "		
	300	BATTERY CHARGER	20/1	27	28	20/1	LIGHT		300
		BLANK	–	29	30	20/1	GFI RECEPTACLE	180	
6280	5580	PHASE TOTALS					PHASE TOTALS	5460	5580
TOTAL VA =	22900	TOTAL AMPS =	95						

vertical bridge

verizon

2770 SHADELANDS DR, BLDG 11
WALNUT CREEK, CA 94598

ENGINEER:

Streamline Engineering and Design, Inc.

3843 TAYLOR ROAD, SUITE A, LOOMIS, CA 95650
Contact: Kevin Sorensen Phone: 916-660-1930
E-Mail: kevin@streamlineeng.com Fax: 916-660-1941

THESE PLANS AND SPECIFICATIONS, AS INSTRUMENTS OF SERVICE, ARE AND SHALL REMAIN THE PROPERTY OF STREAMLINE ENGINEERING AND DESIGN INC. WHETHER THE PROJECTS FOR WHICH THEY ARE MADE ARE EXECUTED OR NOT. THESE DRAWINGS AND SPECIFICATIONS SHALL NOT BE USED BY ANY PERSON OR ENTITY ON OTHER PROJECTS WITH OUT PRIOR WRITTEN CONSENT OF THE ENGINEER. Copyright © 2009, STREAMLINE ENGINEERING AND DESIGN INC. ALL RIGHTS RESERVED.

REV	SUBMITTAL/REVISION	CAD	DATE
7	CLIENT REV	T.T.	07/29/25
6	CLIENT REV	D.H.	06/18/25
5	CLIENT REV	J.Z.	05/30/25
4	CLIENT REV	D.H.	08/13/24
3	CLIENT REV	S.V.	04/10/24
2	CLIENT REV	T.K.	02/28/24

DRAWN: SEAD
CHECKED: S. SAVIG
APPROVED: -

PROJECT NUMBER: US-CA-7349

PROJECT TITLE:

PRAIRIE POINT

2574 EASTRIDGE DRIVE
LINCOLN, CA 95648

ENGINEER STAMP:

PRELIMINARY: NOT FOR CONSTRUCTION

KEVIN R. SORENSEN
S4469

DRAWING TITLE:

ELECTRICAL PLAN

Drawing Scale: AS NOTED
Date: 07/29/2025

ZD

IT IS A VIOLATION OF LAW FOR ANY PERSON, UNLESS THEY ARE ACTING UNDER THE DIRECTION OF A LICENSED PROFESSIONAL ENGINEER, TO ALTER THIS DOCUMENT.

DRAWING NUMBER:

E-1.1

Attachment 2
Prairie Point Tower Photo Simulations

Prairie Point
2574 Eastridge Drive
Lincoln, CA 95648

vertical bridge US-CA-7349

Aerial photograph showing the viewpoints for the photosimulations.



© Copyright 2025 Previsualists Inc. • www.photosim.com • Any modification is strictly prohibited. Printing letter size or larger is permissible. This photosimulation is based upon information provided by the project applicant.



Photosimulation of the view looking northeast from Ledgestone Lane, between Eastcliff and Southcreek.

Prairie Point
2574 Eastridge Drive
Lincoln, CA 95648

vertical bridge US-CA-7349



© Copyright 2025 Previsualists Inc. • www.photosim.com • Any modification is strictly prohibited. Printing letter size or larger is permissible. This photosimulation is based upon information provided by the project applicant.



Prairie Point
2574 Eastridge Drive
Lincoln, CA 95648

vertical bridge US-CA-7349

Photosimulation of the view looking northwest from Southcreek Drive, at Bellarine Court.



© Copyright 2025 Previsualists Inc. • www.photosim.com • Any modification is strictly prohibited. Printing letter size or larger is permissible. This photosimulation is based upon information provided by the project applicant.

3



Prairie Point
2574 Eastridge Drive
Lincoln, CA 95648

vertical bridge US-CA-7349

Photosimulation of the view looking west along westbound Eastridge Drive, approaching Bradborne Dr.



© Copyright 2025 Previsualists Inc. • www.photosim.com • Any modification is strictly prohibited. Printing letter size or larger is permissible. This photosimulation is based upon information provided by the project applicant.



Photosimulation of the view looking west-southwest from Eastridge Drive at the Twelve Bridges Park entrance.

Prairie Point
2574 Eastridge Drive
Lincoln, CA 95648

vertical bridge US-CA-7349



© Copyright 2025 Previsualists Inc. • www.photosim.com • Any modification is strictly prohibited. Printing letter size or larger is permissible. This photosimulation is based upon information provided by the project applicant.



Photosimulation of the view looking southwest across the west ballfields of Twelve Bridges Park.

Prairie Point
2574 Eastridge Drive
Lincoln, CA 95648

vertical bridge US-CA-7349



© Copyright 2025 Previsualists Inc. • www.photosim.com • Any modification is strictly prohibited. Printing letter size or larger is permissible. This photosimulation is based upon information provided by the project applicant.

6

Existing

Photosimulation of the view looking south from Twelve Bridges Drive, in front of the Elementary School.

Prairie Point
2574 Eastridge Drive
Lincoln, CA 95648

vertical bridge US-CA-7349

Proposed 60 ft broadleaf tree pole

Proposed

23

© Copyright 2025 Previsualists Inc. • www.photosim.com • Any modification is strictly prohibited. Printing letter size or larger is permissible. This photosimulation is based upon information provided by the project applicant.



Photosimulation of the view looking southeast along eastbound Twelve Bridges Drive.

Prairie Point
2574 Eastridge Drive
Lincoln, CA 95648

vertical bridge US-CA-7349



© Copyright 2025 Previsualists Inc. • www.photosim.com • Any modification is strictly prohibited. Printing letter size or larger is permissible. This photosimulation is based upon information provided by the project applicant.