Plan Commission Agenda

Sandra "Sandy" Frum Board Room
1225 Cedar Lane Northbrook, IL 60062
Tuesday, September 30, 2025

7:00 PM

1. **ROLL CALL**
2. **MINUTES APPROVAL**
   A. Minutes for Approval - September 2, 2025
   Review and approve September 2, 2025 Plan Commission meeting minutes.
3. **COMMUNITY PLANNING REPORT**
4. **PUBLIC COMMENT TIME**

This agenda item is reserved for members of the public who desire to address the Public Body on a topic that is within purview and jurisdiction of the Public Body, but that is not listed in another location on the agenda. If you would like to speak about a matter that is listed on the agenda, we ask that you wait until that agenda item is called, and we will give you an opportunity to speak then. Anyone desiring to speak should fill out a written speaker form (located in the back of the meeting room) and submit it to the Staff Liaison. “Public Comment Time” is not a forum for open dialogue or engagement with members of the Public Body. Rather, it is intended as an opportunity for you to make comments to the Public Body. While the Public Body will not immediately respond to public comments at this meeting, or engage in a back and forth discussion during the meeting, please be assured that the Public Body is actively listening to all comments, thoughts, and suggestions. All speakers will be limited to a total of three minutes. We request that everyone be respectful, civil, and non-repetitive; and we ask that members of the audience refrain from applauding or making any other comments during or after any speaker. Thank you for your understanding and taking the time to contribute to the success of our community.

5. **PUBLIC HEARING**
   A. DOCKET NO. PCD-25-07: 180 ANETS DRIVE - CROWN CASTLE GT COMPANY LC (Public Hearing) - An application filed by Crown Castle GT Company LC of the property commonly known as 180 Anets Drive, for the purpose of: (A) Special permit to allow a Personal Wireless Services Antenna located on a Tower-Style Structure in Excess of District Height Limitations in the I-B Institutional Building District; (B) Variation to reduce the required distancing between the existing personal wireless service antenna tower and nearby structures from 110â€™ to 69â€™; and (C) Approval of any other such variations, waivers, and zoning relief as may be necessary.
   Crown Castle has operated a cell tower with related equipment on the property for several years. The special permit expired approximately one year ago after the property owner originally considered terminating the lease, but the property owner has decided to renew the lease to allow for continued tower operation, thus the applicant is seeking a new special permit.

   B. DOCKET NO. PCD-25-11 - 1250 TECHNY ROAD - CRATE & BARREL (Public Hearing). An application filed by Euromarket Designs Inc. d/b/a Crate & Barrel

as sub-lessee of the property commonly known as 1250 Techny Road, which is leased by Feiga/Cimarron Northbrook, LLC c/o BLDG Management Co., Inc. The Subject Property is owned by Parcel NC-1A/NC-1B LLC/Techny Land Corporation NFP, for the purposes of: (A) Special Permit for Child Day Care Services (SIC No. 8351.00) in the O-3 General Office/Techny Overlay District; and (B) Approval of any such variations, waivers, and zoning relief as may be necessary.
Crate & Barrel proposes to repurpose a portion of the existing office and warehouse building and operate a child daycare facility with outdoor playground on the Subject Property.

C. DOCKET NO. PCD-25-12: 820 DUNDEE ROAD - NORTHBROOK FIRE STATION (Public Hearing). An application filed by Village of Northbrook as owner of the property commonly known as 820 Dundee Road, for development of a new fire station for the purposes of: (A) Comprehensive Plan Map Amendment from Multi-Family 6-9 DUA to Government Facility; (B) Rezoning from R-2 Single-Family Residential District to IB Institutional Building District; (C) Special Permit to Allow one wall sign in excess of District Height Limitation (SIC No. 9966.00) in IB District; (D) Variation to reduce the required lot width from 300â€™ to 167.54â€™ in IB District; (E) Variation to reduce the required yard (west) from 20â€™ to 0â€™; (F) Variation to reduce the required yard (east) from 40â€™ to 20â€™; (G) Variation to reduce the required special building setback (east) for non-dwelling use abutting residential use from 40â€™ to 20â€™; (H) Variation to reduce the required number of loading spaces from 1 to 0; (I) Site Plan Approval; and (J) Approval of any such variations, waivers, and zoning relief as may be necessary.
The Village of Northbrook proposes to construct a new fire station on the Subject Property.

D. DOCKET NO. PCD-25-13: 3504 COMMERCIAL AVENUE - NORTHBROOK FLEET MAINTENANCE GARAGE FACILITY (Public Hearing). An application filed by Village of Northbrook as owner of the property commonly known as 3504 Commercial Avenue, for development of a new Village fleet maintenance garage for the purposes of: (A) Comprehensive Plan Map Amendment from General Industrial, Warehouse, and Office to Government Facility; (B) Rezoning from I-1 Restricted Industrial to IB Institutional Building District; (C) Variations of the following bulk and space regulations in the IB District: (i) Lot Area from 85,000 square feet to 69,000 square feet; (ii) Lot width from 300 feet to 200 feet; (iii) Required yard: interior side (east) from 20â€™ to 19â€™11â€; interior side (west) from 20â€™ to 0â€™; and rear (north) from 20â€™ to 10â€™; (iv) Required setback: front (south) from 35â€™ to 32â€™10â€; and interior side (east) from 20â€™ to 19â€™11â€; and (v) Floor Area Ratio from 0.35 to 0.45 (D) Variation to reduce the required parking from 35 spaces to 27 spaces (23%); (E) Variation to reduce the loading space requirement from 1 to 0; (F) Site Plan Approval; and (G) Approval of any such variations, waivers, and zoning relief as may be necessary.
The Village of Northbrook proposes to repurpose an existing industrial building for a new Village fleet maintenance garage facility on the Subject Property.

6. REVIEW OF DRAFT RESOLUTIONS

7. DISCUSSION TOPICS

8. REMARKS FOR THE GOOD OF THE ORDER

9. ADJOURN

The Village of Northbrook is subject to the requirements of the Americans with Disabilities Act of 1990. Individuals with disabilities who plan to attend this meeting and who require certain accommodations in order to allow them to observe or participate in this meeting, or who have questions regarding the accessibility of the meeting or facilities, are requested to promptly contact the Village of Northbrook at (847) 272-5050, or the Illinois Relay Center at (800) 526-0844, to allow the Village of Northbrook to make reasonable accommodations for those persons.

MEMORANDUM

To: Plan Commission
From: Deputy Director of Development & Planning Services Michaela Kohlstedt
Date: 2025-09-30
Subject: Minutes for Approval - September 2, 2025

Overview
Review and approve September 2, 2025 Plan Commission meeting minutes.

Fiscal Impact
N/A.

Recommendation
Review and Approval.

Background

MEMORANDUM

To: Plan Commission
From: Deputy Director of Development and Planning Services Department
Michaela Kohlstedt
Date: 2025-09-30
Subject: DOCKET NO. PCD-25-07: 180 ANETS DRIVE - CROWN CASTLE GT COMPANY LC (Public Hearing) - An application filed by Crown Castle GT Company LC of the property commonly known as 180 Anets Drive, for the purpose of: (A) Special permit to allow a Personal Wireless Services Antenna located on a Tower-Style Structure in Excess of District Height Limitations in the I-B Institutional Building District; (B) Variation to reduce the required distancing between the existing personal wireless service antenna tower and nearby structures from 110' to 69'; and (C) Approval of any other such variations, waivers, and zoning relief as may be necessary.

Overview
Crown Castle has operated a cell tower with related equipment on the property for several years. The special permit expired approximately one year ago after the property owner originally considered terminating the lease, but the property owner has decided to renew the lease to allow for continued tower operation, thus the applicant is seeking a new special permit.

Fiscal Impact
N/A.

Recommendation
Conduct a public hearing and consider a draft Resolution recommending approval.

Background
See attachments.

180 Anets- Staff Report 9-30-25
180 Anets - Draft Plan Commission Resolution
180 Anets - Application Summary, Aerials, Site Photos - 180 Anets
180 Anets - BOT Minutes 8-12-25
180 Anets - Formal Application
180 Anets - Narrative and Plans

MEMORANDUM

To: Plan Commission
From: Nya Carr, Planning & Zoning Technician
CC: Michaela Kohlstedt, Deputy Director
Date: September 30, 2025
Subject: PCD-25-07: 180 Anets Drive– Existing Cell Tower Renewal

INTRODUCTION

On September 30, 2025 the Plan Commission will conduct a public hearing on an application filed by Crown Castle GT Company LC (the "Applicant") for the property commonly known as 180 Anets Drive (the "Subject Property), which is owned by the Northbrook Park District (the "Owner"). The Applicant is requesting to continue to maintain and operate an existing personal wireless services facility on an antenna support structure and requires zoning approval. The following zoning relief is requested:

A. Special permit to allow a Personal Wireless Services Antenna located on a Tower-Style Structure in Excess of District Height Limitations in the I-B Institutional Building District; and

B. Variation to reduce the required distancing between the existing personal wireless service antenna tower and nearby structures from 110' to 69'; and

C. Approval of any other such variations, waivers, and zoning relief as may be necessary to accomplish development and use of the Subject Property as requested by the Applicant.

A sign has been posted on the Subject Property indicating the time and date of the Plan Commission public hearing. The Applicant has submitted evidence that the mailed notice requirements of the Zoning Code have been satisfied. The Plan Commission hearing was properly noticed in the August 28, 2025 edition of the *Northbrook Star* for a public hearing on September 16, 2025. Due to a lack of a quorum the meeting was canceled and posted to occur on September 30, 2025.

PROPERTY DESCRIPTION

The Subject Property is noted as being:

- 6.23 acres in size;
- zoned IB Institutional Building District;
- located west of Anets Drive, north of Techny Road, and east of the railroad tracks;
- developed with an existing recreational building and parking lot;
- surrounded by properties with zoning and land uses which are depicted on the attached Application Summary;
- designated as appropriate for Government Facility uses in the Comprehensive Plan;
- not located within the 100-year flood plain;
- not located within a stormwater project area as identified in the Master Stormwater Management Plan;
- The Village's Bicycle and Pedestrian Plan designates Anets Drive in front of the Subject Property as appropriate for a signed and marked roadway, while Techny Road is appropriate for conventional bike lanes.

BACKGROUND INFORMATION

- The Subject Property has an existing personal wireless service in the IB Institutional Building District.
- In 2019, a special permit was granted through Ordinance No. 2019-51 for the same relief currently being requested, which was renewed by Ordinance No. 2021-35 that ultimately expired on January 31, 2023. At the time of the expiration the Park District had indicated it would no longer be leasing land for cell tower use. In the last several months, the Park District of Northbrook determined that it would continue to lease land for the use of the cell tower, so the applicant is now requesting a new special permit given the expiration of the previous special permit.

Preliminary Review

On August 12, 2025, the Board of Trustees conducted a preliminary review of the request to maintain the continued operation of wireless antenna equipment on a tower style structure in the I-B Institutional Building District. The Board of Trustees found the request to be appropriate. An excerpt of the Board of Trustees minutes is attached for reference, and the meeting can be viewed on the Village website as well to hear the actual commentary from the Trustees.

The proposal and the general layout of the plan presented at preliminary review have not changed with the formal application. The following is a table of the comments made by members of the Board of Trustees:

Trustee	Title	Status	Comments
Kathryn Ciesla	Village President	Present	Abstain
Michelle Kohler	Trustee	Present	In favor of the application
Heather Ross	Trustee	Present	In favor of the application
Johannah Hebl	Trustee	Present	In favor of the application
Matt Cassidy	Trustee	Present	In favor of the application
Joy Ebhomielen	Trustee	Absent	
Robert Israel	Trustee	Absent	

Staff Review

Prior to scheduling a public hearing the application underwent the standard review process and was reviewed by the following departments/entities:

- Development and Planning Services (Planning & Zoning)
- Fire
- Police

They all approved the application upon review, subject to further review at the time of permitting.

Compliance with Village Plans

- The Comprehensive Plan identifies the property for government facility uses use which is intended to accommodate existing and future government facilities among other uses.
- The Village's Bicycle and Pedestrian Plan designates Anets Drive in front of the Subject Property as appropriate for a signed and marked roadway, while Techny Road is appropriate for conventional bike lanes.

PROPOSED PROJECT

- The Applicant is requesting to maintain the continued operation of wireless antenna equipment on a tower style structure in the I-B Institutional Building District. There are no significant changes being proposed, but the applicant does intend to update the equipment panels on the tower as technology continues to evolve. This is a standard process for cell tower equipment.
- Northbrook Park District has confirmed that the lease for the Applicant will be terminated January 12, 2048 and their letter is attached.

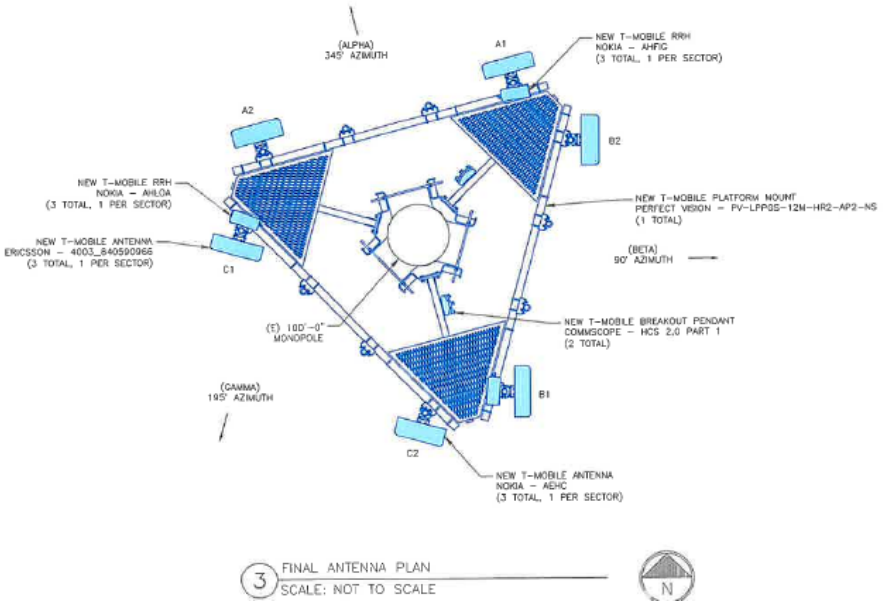

Figure 1: Proposed Plan

ZONING RELIEF

Special Permit

The Applicant is requesting approval for an existing personal wireless services antenna on a tower style support structure which requires a special permit in IB District. The details of the use have been discussed above. The Plan Commission and Board of Trustees must consider the general standards for special permit established in Paragraph 11-602 E1 of the Zoning Code when deciding whether to grant the requested special permit. These standards include the following:

1) Is the proposal in compliance with the Zoning Code and Official Comprehensive Plan?
2) Will there be any adverse impact upon adjacent properties?
3) Will the proposed use interfere with the orderly development of adjacent properties?
4) Are there adequate public facilities to serve the development?
5) Will the use cause undue traffic congestion?
6) Will the development cause loss of significant environmental or historical features?

7) Will the use comply with other applicable Village standards?

Several of the above criteria are of particular importance in considering whether or not a special permit should be granted for the proposed use, specifically standards 2,3 & 4. The Applicant has included a statement of justification with their application addressing the above points.

Variation

In addition to the above noted relief, the Applicant would also need a variation to reduce the required distancing between the existing personal wireless service antenna tower and nearby structures from 110' to 69'. This relief is the same requested variation granted in the previously approved special permit ordinance.

SUMMARY

In reviewing this request, staff suggests the Plan Commission consider the following policy questions:

1) Does the existing cell tower remain an appropriate use on the site?
2) Should a special permit be granted to bring the existing cell tower into compliance?
3) Does the variation remain an appropriate request for the existing tower on the site in proximity to an existing building?

Staff has prepared the attached draft resolution for consideration by the Commission. If the Commission should choose to amend and/or take action on this resolution, it would be **Resolution No. 25-PC-16.**

The Applicant and staff will attend the September 30, 2025 Plan Commission meeting to answer any questions.

DRAFT

RESOLUTION NO. 25-PC-__

VILLAGE OF NORTHBROOK PLAN COMMISSION
DOCKET NO. PCD-25-07
(180 ANETS DRIVE)

WHEREAS, an application has been filed by Crown Castle GT Company LC (the "Applicant") as lessee of the personal wireless services antenna commonly located and known as 180 Anets Drive (the "Subject Property"), which is owned by the Northbrook Park Distrct (the "Owner"), and

WHEREAS, the Applicant has filed an application (Docket No. PCD-25-07) with the Village of Northbrook requesting:

A. Special permit to allow a Personal Wireless Services Antenna located on a Tower-Style Structure in Excess of District Height Limitations in the I-B Institutional Building District; and

B. Variation to reduce the required distancing between the existing personal wireless service antenna tower and nearby structures from 110' to 69'; and

C. Approval of any other such variations, waivers, and zoning relief as may be necessary to accomplish development and use of the Subject Property as requested by the Applicant.

WHEREAS, the Subject Property is designated as appropriate for Government Facility uses in the Village of Northbrook Comprehensive Plan; and

WHEREAS, a public notice for this docket was duly published on August 28, 2025 in the *Northbrook Star* and a public hearing was scheduled for the September 16, 2025 Plan Commission's regular meeting, but due to a lack of quorum the meeting was canceled and the Plan Commission held the public hearing at a special meeting on September 30, 2025; and

WHEREAS, the Applicant has submitted evidence that signs were properly posted on the Subject Property, indicating the time and date of the Commission hearing, and that all property owners within 250 feet of the Subject Property were notified of the Commission hearing by certified mail; and

WHEREAS, the Plan Commission has considered all the evidence presented to it, including, but not limited to, the following:

1. Village of Northbrook Plan Commission Application form & attachments received June 26, 2025, and all subsequent additions and revisions to these application materials and attachments.
2. Comments made by the Board of Trustees during its review of the preliminary application regarding this request.
3. All written and oral testimony concerning the application.

NOW, THEREFORE, BE IT RESOLVED by the Plan Commission of the Village of Northbrook, Cook County, Illinois, THAT:

1. <u>Findings</u>:

A. Comprehensive Plan Compliance. The Northbrook Plan Commission does hereby find that with respect to Docket No. PCD-25-07 the proposed application **is in general compliance** with the Northbrook Comprehensive Plan, and specifically in compliance with the Future Land Use Map.

B. Special Permit. With respect to Docket No. PCD-25-07A, the Plan Commission does hereby find that the Special Permit standards established in Paragraph 11-602 E1 of the Zoning Code, for the existing personal wireless service (the "Facility"), are **satisfied** as follows:

1) The Facility will be in harmony with the general and specific purposes for which this Code was enacted and for which the regulations of the IB Institutional Building District were adopted, and with the general purpose and intent of the Official Comprehensive Plan.

2) The Facility will not have a substantial or undue adverse effect upon adjacent property, the character of the area or the public health, safety and general welfare.

3) The Facility will be arranged and operated so as not to dominate the immediate vicinity or to interfere with the use and development of neighboring property.

4) The Facility will be served adequately by essential public facilities and services.

5) The Facility will not cause undue traffic congestion nor draw significant amounts of traffic through residential streets.

6) The Facility will not result in the destruction, loss or damage of natural, scenic or historic features of significant importance.

7) The Facility complies with all additional standards imposed on it by the particular provisions of the Zoning Code authorizing such use.

C. Variation. With respect to Docket No. PCD-25-07B, a request to reduce the required distancing between the existing personal wireless service antenna tower and nearby structures from 110' to 69', the Plan Commission finds that a variation to reduce the required distancing between the existing personal wireless service antenna tower and nearby structures from 110' to 69' is **consistent** with the standards for variations established in subsection 11-503F of the Zoning Code.

D. Other Relief. With respect to Docket No. PCD-25-07C, the Plan Commission does hereby find that no other relief is necessary.

2. Recommendations: The Northbrook Plan Commission does hereby recommend to the President and Board of Trustees of the Village of Northbrook **approval** of Docket No. PCD-25-07A/B based on the findings established herein, subject to the following conditions:

A. Special Permit for Personal Wireless Services Antenna. A special permit to allow a personal wireless services antenna located on a tower-style structure in excess of district height limitations (SIC No. 4810.02) shall be issued to the Applicant for the Subject Property.

B. Variation. A variation shall be granted to reduce the required distancing between the existing personal wireless service antenna tower and nearby structures from 110' to 69', on the Subject Property.

ADOPTED THIS __ day of September 2025.

AYES: ()

NAYS: ()

ABSENT: ()

ABSTAIN: ()

_____
Steven Elisco, Chairman
Northbrook Plan Commission

ATTEST:

_____
Amy McEwan, Director
Development and Planning Services

PCD-25-07: 180 ANETS DRIVE
APPLICATION SUMMARY

Applicant:	Crown Castle GT Company, LLC
Site Location:	180 Anets Drive
Requested Action:	Special Permit Renewal to Allow Personal Wireless Service Antennas on Tower- Style Antenna Support Structure
Proposal:	Special permit for the operation of the wireless antenna equipment on a tower style structure
Existing Zoning & Land Use:	IB Institutional Building; property owned by Park District
Surrounding Zoning & Land Use:	North: OS Open Space South: I-1 Restricted Industrial & ICS Industrial Commercial Services East: OS Open Space West: I-1 Restricted Industrial
Comprehensive Plan Designation:	Government Facility

ZONING MAP

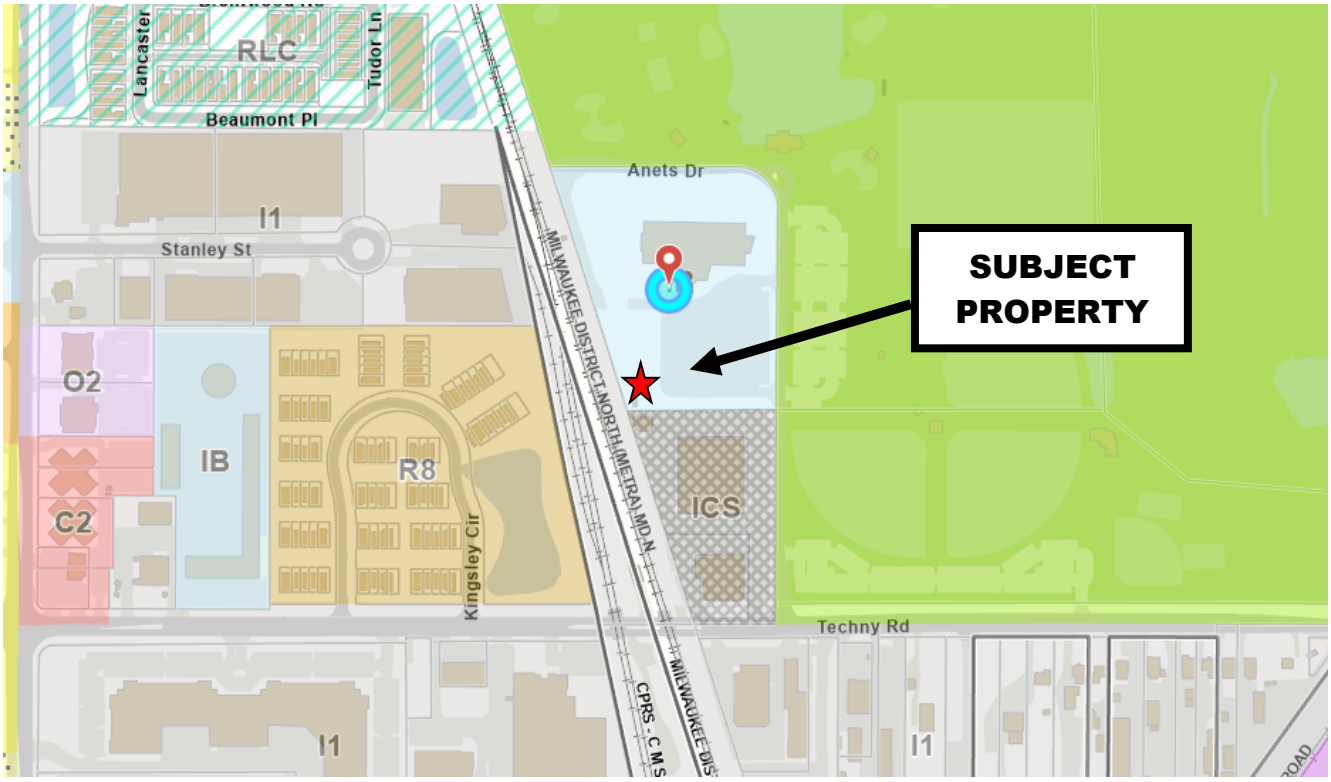

COMPREHENSIVE PLAN MAP

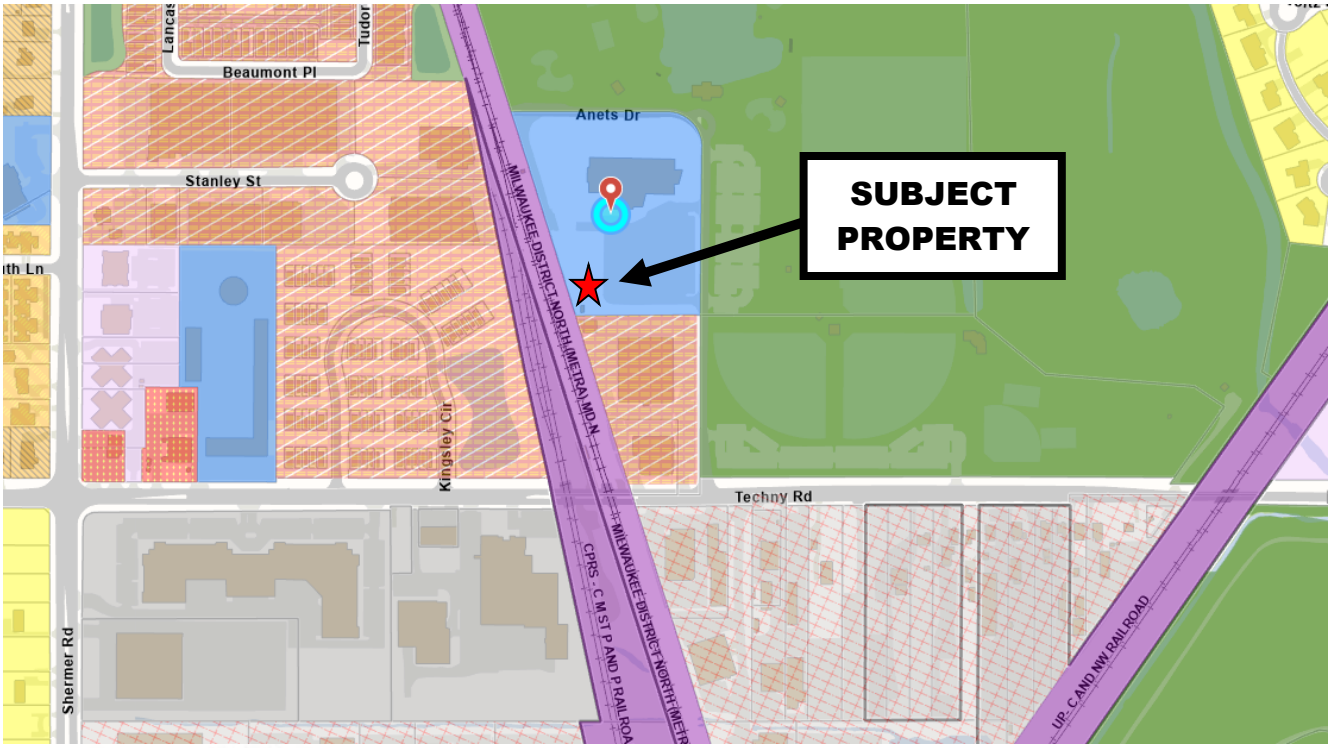

Legend

- Open Space & Outdoor Recreation
- Single Family
- Single Family Large Lot
- Multi-Family up to 6 DUA
- Multi-Family 6-9 DUA
- Multi-Family 9-15 DUA
- Multi-Family over 15 DUA
- Senior or Special Residential
- Government Facility
- Institutional Facility
- Neighborhood Office
- Neighborhood Edge 1
- Neighborhood Edge 2
- Office - Professional
- Office - Corporate/Corridor
- Community Retail
- Major Retail
- Industrial & Commercial Service
- General Industrial, Warehouse & Office
- Major Industrial/Distribution
- Transportation, Comm. & Utilities
- Village Center Mixed Use
- Techny Area Multi-Use
- Major Corridor Multi-Use
- Techny Area

GISConsortium | 180 Anets



0 500 1000 ft

Print Date: 7/21/2025

Notes

Disclaimer: The GIS Consortium and MGP Inc. are not liable for any use, misuse, modification or disclosure of any map provided under applicable law. This map is for general information purposes only. Although the information is believed to be generally accurate, errors may exist and the user should independently confirm for accuracy. The map does not constitute a regulatory determination and is not a base for engineering design. A Registered Land Surveyor should be consulted to determine precise location boundaries on the ground.

GISConsortium | 180 Anets



0 450 900 ft

Print Date: 7/21/2025

Notes

Disclaimer: The GIS Consortium and MGP Inc. are not liable for any use, misuse, modification or disclosure of any map provided under applicable law. This map is for general information purposes only. Although the information is believed to be generally accurate, errors may exist and the user should independently confirm for accuracy. The map does not constitute a regulatory determination and is not a base for engineering design. A Registered Land Surveyor should be consulted to determine precise location boundaries on the ground.


Tooling Prairie
Activity Center
Anets Dr
Anets Dr
Wrapped, LLC



G. Preliminary Review of a Request by Crown Castle GT Company LC for a Special Permit for Personal Wireless Services Antenna located on a Tower-Style Structure in Excess of District Height Limitations and a Variation to reduce the required distance between the existing personal wireless service antenna tower and nearby structures from 110' to 69' at 180 Anets Drive

Presentation waived.

RESULT:	**MOVED TO PLAN COMMISSION [4 – 0]**
MOVER:	Michelle Kohler, Trustee
SECONDER:	Heather Ross, Trustee
AYES:	Ross, Hebl, Kohler, Cassidy
NAYES:	None
ABSTAIN:	Kathryn Ciesla, President
ABSENT:	Robert Israel, Trustee and Joy Ebhomielen, Trustee

11. COMMUNITY AND SUSTAINABILITY – None

Trustee Ross mentioned the groundbreaking of Poupard Place.

12. HOUSING – None

13. PUBLIC WORKS AND FACILITIES – None

14. PUBLIC SAFETY – None

8F. Resolution 2025-R-126 Authorizing an Agreement for Staffing and Organizational Planning Services with Citygate Associates, LLC of Folsom, CA

John Ustich, Police Chief, explained that the project aims to assess longstanding staffing levels, with the RFP later expanded to review zoning, crime, staff use, and increasing costs.

Village Manager Pavlicek explained that in 2022, the Fire Department hired Polaris for a $70,900 organizational assessment, and now a similar Police Department study is needed to guide the new facility planning; while costs may seem high, they are consistent with past assessments and inflation.

RESULT:	**APPROVED [5– 0]**
MOVER:	Matt Cassidy, Trustee
SECONDER:	Heather Ross, Trustee
AYES:	Ross, Hebl, Kohler, Cassidy, Ciesla
NAYES:	None
ABSTAIN:	None
ABSENT:	Robert Israel, Trustee and Joy Ebhomielen, Trustee

15. COMMUNICATIONS AND OUTREACH

Trustee Kohler remarked that The Village has hired an agency to assess and improve communications, develop a plan by December, and engage the community in the process alongside the strategic plan.

Docusign Envelope ID: 73F002A8-3BF6-43A3-8EB8-CECE7883948A

FORMAL APPLICATION ±ZONING & SUBDIVISION RELIEF**

Prior to submitting this formal application, the matter must first be reviewed as a preliminary application by the Village Board of Trustees . If the Board has not yet reviewed your preliminary application, please contact the Department of Development & Planning Services to learn what is required. The following materials are the minimum UHTXLUHG IRU WKH SURFHVVLQJ RI D IRUPDO DSSOLFDWLRQ E\ WKH 9LOODJ
A public hearing or public meeting for an application will not be scheduled until all required materials have been submitted and revised as necessary to meet Code requirements, as determined by Village staff. If you have questions regarding the completion of this application please contact the Development & Planning Services Department at 847-664-4050.
**Applications for zoning relief from the Zoning Board of Appeals must use a different application form.

The initial submittal MUST contain:

- 1 electronic version (PDF) of ALL application materials (refer to application section regarding instructions).

Applicant Information

Legal Name &52:1 &$67/(*7 &203$1< /&

Company &52:1 &$67/(*7 &203$1< /&

Address [redacted]

City, State, Zip [redacted]

Phone No. [redacted]

Email [redacted]

Primary Contact Person

Name -,0 /((352*5$0 0*5

Company [redacted]

Address [redacted]

City, State, Zip [redacted]

Phone No. [redacted]

Email [redacted]

Consultants (as applicable)

Attorney

Name

Company

Address

City, State, Zip

Phone No.

Email

Architect/Planner

Name

Company

Address

City, State, Zip

Phone No.

Email

Civil Engineer

Name

Company

Address

City, State, Zip

Phone No.

Email

Other

Name [redacted]

Company [redacted]

Address [redacted]

City, State, Zip [redacted]

Phone No. [redacted]

Email [redacted]

Docusign Envelope ID: 73F002A8-3BF6-43A3-8EB8-CECE7883948A

Property Information (if more than one parcel is involved in the request please include the information for all parcels)

Site Location/Address: _____

Property Index Numbers: _____

_____

Size of Property: _____ (square feet/acres)

Size of Building Space, if applicable: _____ (square feet)

Comprehensive Plan Land Use Designation[1]: _____

Current Zoning: _____

Current Use of the Property: _____

Is any portion of the property within the 100-year floodplain?[1] Yes: _____ No: _____

Requested Action (s) (check all that are applicable)

‰ Comprehensive Plan Amendment

‰ Annexation (separate form required)

‰ Rezoning from _____ to _____

‰ Special Permit for _____

_____

_____

‰ Renewal of Special Permit Ord. No. _____

‰ Amendment to Existing Special Permit
Ord. No. _____

‰ Site Plan Approval

‰ Zoning Code Text Amendment

‰ Zoning Variation (in conjunction with other relief)
for _____

_____

‰ Planned Development - Concept Plan

‰ Planned Development - Final Plan

‰ Subdivision - Tentative Plat

‰ Subdivision - Final Plat

‰ Subdivision - Variations/Waiver for _____

_____

‰ Exception for _____

‰ Other _____

‰ Plat of Survey & Parcel Legal Description(s)

Attach the most recent plat of survey of the Subject Property, certified by a registered land surveyor, showing existing lot lines and dimensions, lot area, all easements, all public and private rights-of-way, and all streets across and adjacent to the subject property.

‰ Conformity with Comprehensive Plan

Include a written statement explaining the conformity, or lack of conformity, of the approval being requested to the Village ¶ Official Comprehensive Plan and Official Map. Where the approval being requested does not conform to the Official Comprehensive Plan or Official Map, provide reasons justifying the requested approval.

‰ Surrounding Property Owners Addresses

Please attach the names and mailing addresses of all property owners of record (not tenants) within 250 feet of the property, excluding public rights-of-way, based on current County tax records. See page10 of this document for instructions on how to obtain the addresses.

[1] As found on the Village website www.northbrook.il.us/Government/Departments/Planning/GIS/index.php

Docusign Envelope ID: 73F002A8-3BF6-43A3-8EB8-CECE7883948A

Site Ownership and Control

Current Property Owner Information

Legal Name: _____

Primary Contact: _____

Address [redacted]

City, State, Zip [redacted]

Phone No. [redacted]

Email _____

Proposed Property Owner Information

Legal Name: _____

Primary Contact: _____

Address [redacted]

City, State, Zip [redacted]

Phone No. [redacted]

Email _____

Attach a copy of a title policy or deed showing current ownership of the property. If property is held in a trust, also include a certified copy of the trust agreement or a simple affidavit (under oath before a notary) as to who are the beneficiaries of the trust. (Check which document(s) are attached):

- ‰ Deed
- ‰ Title Policy or Title Commitment (Required for Subdivision Applications & Plats of Consolidation Applications)
- ‰ Certified Copy of Trust Agreement OR a simple Affidavit Identifying Trust Beneficiaries

‰ Complete Attachment A , listing all individuals/entities that have a beneficial interest in the legal entity that currently owns the property

‰ Complete Attachment B, listing all individuals/entities that have a beneficial interest in the legal entity that is proposed to own the property upon receiving necessary approvals .

Applicants Involvement with the Property

If the Applicant does not own the property, please also S U R Y L G H G R F X P H Q W D W L R Q V K R Z L Q J W K H D property (Check which document is attached. The dollar amounts in documents may be blacked-out):

‰ Owner (see the previous box)
‰ Real Estate Contract
‰ Lease
‰ Other _____

‰ Complete Attachment C, listing all individuals/entities that have a beneficial interest in the legal entity that is the Applicant.

Additional Required Attachment(s)

Submit all relevant attachments specified in the below worksheet(s) that correspond with your application request(s) selected on page two of this application; the worksheets can be found on the Village of Northbrook website www.northbrook.il.us, as well as in the Community Planning Department in the Village Hall. (Check all that are applicable)

‰ Comprehensive Plan Amendment Worksheet
‰ Annexation Worksheet
‰ Rezoning Worksheet
‰ Special Permit Worksheet
‰ Site Plan Approval Worksheet
‰ Zoning Code Text Amendment Worksheet
‰ Zoning Variation Worksheet
‰ Planned Development Worksheet- Concept Plan
‰ Planned Development Worksheet- Final Plan
‰ Subdivision Worksheet ±Tentative Plat
‰ Subdivision Worksheet - Final Plat
‰ Subdivision Worksheet - Variations/Waiver
‰ Zoning Exception Worksheet
‰ Condominium Conversion Worksheet
‰ Plat of Consolidation Worksheet

Docusign Envelope ID: 73F002A8-3BF6-43A3-8EB8-CECE7883948A

Filing Fees

All applications require payment of a non-refundable fee, as well as additional funds that are held in escrow to off-set anticipated recoverable expenses. Please attach a check with your application and indicate below the amount of the fee submitted. A copy of the fee schedule is attached to the application form.

$_____ Amount of Non-Refundable Fee

$_____ Amount of Escrow

$_____ Total Application Fee (Non-Refundable Fee plus Escrow)

The escrow covers such items as Village attorney time (currently billing at approx. $400.00 per hour), public notice expenses, public meetings ($50.00 per mtg), & staff review time. If these expenses exceed the initial escrow deposit, the applicant is responsible for additional payment to the Village prior to completing approval process. If the expenses are less than the escrow deposit, the applicant will be issued a refund.

Northbrook Ethics Code (potential conflicts of interest)

On a separate sheet of paper list the name, address, nature, and extent of any current or potential interest that any Village officer or employee may have in, or with respect to the owner, the applicant, or the property. If none, check here: ____
(For more information, see Sections 2-71 through 2-85 of the Northbrook Municipal Code located on our website, or pick-up a copy of the Northbrook Ethics Code booklet in the Development & Planning Services Department at the Village Hall)

Repeat Application

Has any other application for this property been submitted to the Village and denied within the last two years?
____ yes ____ no (check one)
If yes, attach a statement of the grounds justifying reconsideration (See Zoning Code Sec. 11-302).

Applicant/Owner Acknowledgments

By execution of this application in the space provided below, the Applicant and Owner(s) do hereby certify, acknowledge, agree and affirm to the Village of Northbrook that:

1. The Village and its representatives have the right, and are hereby granted permission and license, to enter upon the property, and into any structures located thereon, for purposes of conducting any inspections that may be necessary in connection with this application.

2. I (We) have carefully read this application, the Northbrook Zoning Code and Northbrook Subdivision & Development Code and fully understand the terms and provisions of each.

3. I (We) waive any rights to exemption from disclosure under the Illinois Freedom of Information Act of any and all documents and information submitted in connection with this application.

4. I (We), in accordance with the requirements of the Annual Fee Ordinance, the Northbrook Zoning Code and the Northbrook Subdivision & Development Code, agree to pay all applicable filing fees and be responsible for the payment of all reimbursable expenses associated with the processing of this application.

Applicants may attach additional materials or exhibits to this application if necessary or helpful in explaining the relief requested.

Signature of Applicant : Paul S. Peckens Date 05.19.2025
Print Name & Title: PA S. P Signed by: S. A
Signatures of Property Owner(s) : Chris Leiner C1C03E5800C2491... Date 6/25/2025 | 11:39
Print Name & Title: Chris Leiner Executive Director Property Address : 180 N Anets Drive Northbroo
**If more than one applicant or property owner, please copy this page and have additional applicants/property owners sign form.

Note: Village review and approval of rezoning, special permit, and subdivision applications may be dependent upon the Applic ant first receiving necessary approvals from State and County regulatory agencies such as, but not limited to, the Illinois Department of Transportation, Illinois Environmental Protection Agency, the Metropolitan Water Reclamation District of Greater Chicago, & t he Cook County Highway Department.

ATTACHMENT A: Current Property Owner – Beneficial Interest

Please check which of the following describes the current property owner's beneficial interest in the property and complete this sheet as instructed for each type of beneficial interest:

❑ Corporation	If current property owner is a corporation, please list the name and addresses of all officers and directors of the corporation and all shareholders who own individually or beneficially 5% or more of the stock of the corporation. In addition, this application must be accompanied by a resolution of the corporation authorizing the execution and submittal of this application.
❑ Partnership or LLC	If current property owner is a partnership or an LLC, please list all partners, general and/or limited, with an individual or beneficial interest of 5% or greater.
❑ Trust	If current property owner is a trust, please provide the trust number _____ and name and address of the Trustee _____ _____, as well as list below the names and address of all beneficiaries of the Trust, together with their respective interests in the trust. The application shall be further verified by the current property owner in his capacity as trustee or by the beneficiary as a beneficial owner of an interest in the Trust and the application shall be signed individually by as many beneficiaries as are necessary to constitute greater than 50% ownership of the beneficial interest of the Trust

Name: NORTHBROOK PARK DISTRICT

Address: [redacted]

Ownership or Trust Interest: 100 %

Name: _____

Address: _____

Ownership or Trust Interest: _____ %

Name: _____

Address: _____

Ownership or Trust Interest: _____ %

Name: _____

Address: _____

Ownership or Trust Interest: _____ %

Name: _____

Address: _____

Ownership or Trust Interest: _____ %

Name: _____

Address: _____

Ownership or Trust Interest: _____ %

ATTACHMENT B - Proposed Property Owner ±Beneficial Interest

Please check which of the following GHVFULEHV WKH SURSRVHG SURSHUW\ RZQHU¶V and complete this sheet as instructed for each type of beneficial interest:

‰Corporation	If the proposed property owner is a corporation, please list the name and addresses of all officers and directors of the corporation and all shareholders who own individually or beneficially 5% or more of the stock of the corporation. In addition, this application must be accompanied by a resolution of the corporation authorizing the execution and submittal of this application.
‰Partnership or LLC	If proposed property owner is a partnership or an LLC, please list all partners, general and/or limited, with an individual or beneficial interest of 5% or greater.
‰Trust	If proposed property owner is a trust, please provide the trust number _____ and name and address of the Trustee _____ _____, as well as list below the names and address of all beneficiaries of the Trust, together with their respective interests in the trust. The application shall be further verified by the proposed property owner in his capacity as trustee or by the beneficiary as a beneficial owner of an interest in the Trust and the application shall be signed individually by as many beneficiaries as are necessary to constitute greater than 50% ownership of the beneficial interest of the Trust

Name: _____
_____
Address: _____
_____
Ownership or Trust Interest: _____ %

Name: _____
_____
Address: _____
_____
Ownership or Trust Interest: _____ %

Name: _____
_____
Address: _____
_____
Ownership or Trust Interest: _____ %

Name: _____
_____
Address: _____
_____
Ownership or Trust Interest: _____ %

Name: _____
_____
Address: _____
_____
Ownership or Trust Interest: _____ %

Name: _____
_____
Address: _____
_____
Ownership or Trust Interest: _____ %

Docusign Envelope ID: 73F002A8-3BF6-43A3-8EB8-CECE7883948A

ATTACHMENT C - Applicant ±Beneficial Interest

Please check which of the following describes the beneficial interest in the legal entity that is the applicant and complete this sheet as instructed for each type of beneficial interest:

‰Corporation	If applicant is a corporation, please list the name and addresses of all officers and directors of the corporation and all shareholders who own individually or beneficially 5% or more of the stock of the corporation. In addition, this application must be accompanied by a resolution of the corporation authorizing the execution and submittal of this application.
‰Partnership or LLC	If applicant is a partnership or an LLC, please list all partners, general and/or limited, with an individual or beneficial interest of 5% or greater.
‰Trust	If the applicant is a trust, please provide the trust number _____ and name and address of the Trustee _____ _____, as well as list below the names and address of all beneficiaries of the Trust, together with their respective interests in the trust. The application shall be further verified by the applicant in his capacity as trustee or by the beneficiary as a beneficial owner of an interest in the Trust and the application shall be signed individually by as many beneficiaries as are necessary to constitute greater than 50% ownership of the beneficial interest of the Trust

Name: _____

_____

Address: _____

_____

Ownership or Trust Interest: _____ %

Name: _____

_____

Address: _____

_____

Ownership or Trust Interest: _____ %

Name: _____

_____

Address: _____

_____

Ownership or Trust Interest: _____ %

Name: _____

_____

Address: _____

_____

Ownership or Trust Interest: _____ %

Name: _____

_____

Address: _____

_____

Ownership or Trust Interest: _____ %

Name: _____

_____

Address: _____

_____

Ownership or Trust Interest: _____ %

Date: **June 15, 2023**

MORRISON HERSHFIELD

Morrison Hershfield
1455 Lincoln Parkway, Suite 500
Atlanta, GA 30346
(770) 379-8500

Subject:	**Structural Analysis Report**	
Carrier Designation:		
	Site Number:	CH03XC245
	Site Name:	CH80545A
Crown Castle Designation:	**BU Number:**	875515
	Site Name:	180 Anets
	JDE Job Number:	748400
	Work Order Number:	2237898
	Order Number:	652107 Rev. 0
Engineering Firm Designation:	**Morrison Hershfield Project Number:** CN8-477R1 / 2300001	
Site Data:	**180 North Anets Drive, Northbrook, Cook County, IL 60062** **Latitude *42° 7' 5.01"*, Longitude *-87° 49' 25.77"*** **100 Foot – Valmont Monopole Tower**	

Morrison Hershfield is pleased to submit this **"Structural Analysis Report"** to determine the structural integrity of the above-mentioned tower.

The purpose of the analysis is to determine acceptability of the tower stress level. Based on our analysis we have determined the tower stress level for the structure and foundation, under the following load case, to be:

LC5: Proposed Equipment Configuration **Sufficient Capacity**

This analysis has been performed in accordance with the 2018 International Building Code based upon an ultimate 3-second gust wind speed of 107 mph. Applicable Standard references and design criteria are listed in Section 2 - Analysis Criteria.

Respectfully submitted by:

Yan Wang, S.E. (IL License No.081-007465)
Senior Engineer



LICENSE EXPIRES: 11/30/2024

Docusign Envelope ID: 73F002A8-3BF6-43A3-8EB8-CECE7883948A

TABLE OF CONTENTS

1) INTRODUCTION

2) ANALYSIS CRITERIA
Table 1 - Proposed Equipment Configuration
Table 2 - Other Considered Equipment

3) ANALYSIS PROCEDURE
Table 3 - Documents Provided
3.1) Analysis Method
3.2) Assumptions

4) ANALYSIS RESULTS
Table 4 - Section Capacity (Summary)
Table 5 - Tower Component Stresses vs. Capacity – LC5
4.1) Recommendations

5) APPENDIX A
tnxTower Output

6) APPENDIX B
Base Level Drawing

7) APPENDIX C
Additional Calculations

Docusign Envelope ID: 73F002A8-3BF6-43A3-8EB8-CECE7883948A

1) INTRODUCTION

This tower is a 100 ft monopole tower designed by Valmont Industries, Inc.

2) ANALYSIS CRITERIA

TIA-222 Revision:	TIA-222-H
Risk Category:	II
Wind Speed:	107 mph
Exposure Category:	C
Topographic Factor:	1
Ice Thickness:	1.5 in
Wind Speed with Ice:	40 mph
Service Wind Speed:	60 mph

Table 1 - Proposed Equipment Configuration

Mounting Level (ft)	Center Line Elevation (ft)	Number of Antennas	Antenna Manufacturer	Antenna Model	Number of Feed Lines	Feed Line Size (in)
98.0	98.0	3	nokia	AEHC	2	1-1/2
		3	ericsson	4003_840590966_TMO		
		3	nokia	AHFIG_TMO		
		3	nokia	AHLOA_T-MOBILE		
		2	commscope	HCS 2.0 Part 1		
		1	Perfect Vision	12.5' Platform Mount with Kicker [PV-LPPGS-12M-HR2-AP2-NS]		

Table 2 - Other Considered Equipment

Mounting Level (ft)	Center Line Elevation (ft)	Number of Antennas	Antenna Manufacturer	Antenna Model	Number of Feed Lines	Feed Line Size (in)
88.0	88.0	6	commscope	NNH4-65B-R6 w/ Mount Pipe	7 2 1	13/16 3/8 7/8
		3	ericsson	AIR 6449 B77D w/ Mount Pipe		
		3	ericsson	RADIO 4415 B30		
		3	ericsson	RRUS 4415 B25		
		3	ericsson	RRUS 4449 B5/B12		
		3	ericsson	RRUS 4478 B14		
		3	ericsson	RRUS 8843 B2/B66A		
		1	raycap	DC6-48-60-18-8C-EV		
		2	raycap	DC9-48-60-24-8C-EV		
		1	-	Miscellaneous [NA 507-1]		
		1	-	Platform Mount [LP 712-1_KCKR]		

Docusign Envelope ID: 73F002A8-3BF6-43A3-8EB8-CECE7883948A

3) ANALYSIS PROCEDURE

Table 3 - Documents Provided

Document	Reference	Source
4-GEOTECHNICAL REPORTS	2942400	CCISITES
4-TOWER FOUNDATION DRAWINGS/DESIGN/SPECS	1434608	CCISITES
4-TOWER MANUFACTURER DRAWINGS	1434822	CCISITES

3.1) Analysis Method

tnxTower (version 8.1.1.0), a commercially available analysis software package, was used to create a three-dimensional model of the tower and calculate member stresses for various loading cases. Selected output from the analysis is included in Appendix A. When applicable, Crown Castle has calculated and provided the effective area for panel antennas using approved methods following the intent of the TIA-222 standard.

3.2) Assumptions

1) Tower and structures were maintained in accordance with the TIA-222 Standard.
2) The configuration of antennas, transmission cables, mounts and other appurtenances are as specified in Tables 1 and 2 and the referenced drawings.

This analysis may be affected if any assumptions are not valid or have been made in error. Morrison Hershfield should be notified to determine the effect on the structural integrity of the tower.

4) ANALYSIS RESULTS

Table 4 - Section Capacity (Summary)

Section No.	Elevation (ft)	Component Type	Size	Critical Element	P (K)	SF*P_allow (K)	% Capacity	Pass / Fail
L1	100 - 55.8333	Pole	TP26.497x17x0.2188	1	-11.61	1098.19	51.9	Pass
L2	55.8333 - 27.0833	Pole	TP32.231x25.1636x0.2813	2	-15.38	1718.58	53.2	Pass
L3	27.0833 - 0	Pole	TP37.5x30.6129x0.3438	3	-21.42	2526.25	49.8	Pass
							Summary	
						Pole (L2)	53.2	Pass
						Rating =	53.2	Pass

Table 5 - Tower Component Stresses vs. Capacity – LC5

Notes	Component	Elevation (ft)	% Capacity	Pass / Fail
1	Anchor Rods	0	36.1	Pass
1	Base Plate		25.8	Pass
1	Base Foundation (Structure)	0	46.0	Pass
1	Base Foundation (Soil Interaction)		51.4	Pass

Structure Rating (max from all components) =	53.2%*

Notes:
1) See additional documentation in “Appendix C – Additional Calculations” for calculations supporting the % capacity consumed.
2) *Rating per TIA-222-H, Section 15.5.

Docusign Envelope ID: 73F002A8-3BF6-43A3-8EB8-CECE7883948A

4.1) Recommendations

The tower and its foundation have sufficient capacity to carry the proposed load configuration. No modifications are required at this time.

Docusign Envelope ID: 73F002A8-3BF6-43A3-8EB8-CECE7883948A

APPENDIX A

TNXTOWER OUTPUT

Docusign Envelope ID: 73F002A8-3BF6-43A3-8EB8-CECE7883948A

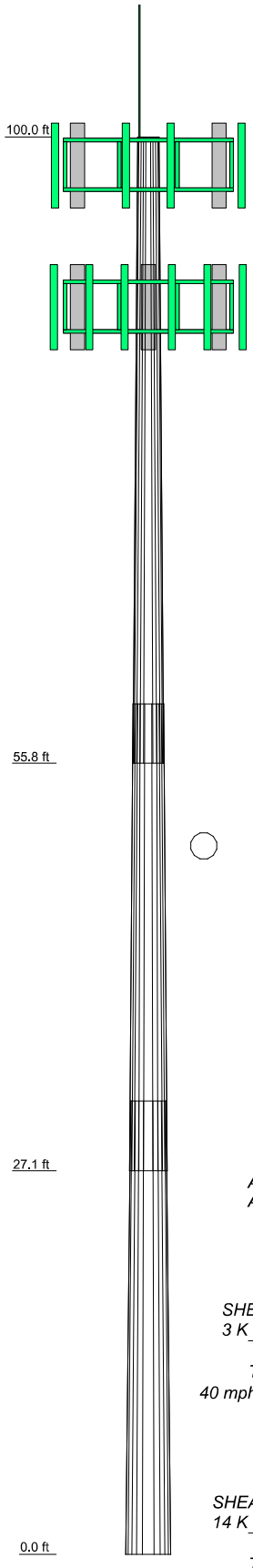

Section	1	2	3		
Length (ft)	44.17	32.92	32.00		
Number of Sides	12	12	12		
Thickness (in)	0.2188	0.2813	0.3438		
Socket Length (ft)	4.17	4.92			
Top Dia (in)	17.0000	25.1636	30.6129		
Bot Dia (in)	26.4970	32.2310	37.5000		
Grade	A572-65				
Weight (K)	2.3	2.9	4.1	9.2	

MATERIAL STRENGTH

GRADE	Fy	Fu	GRADE	Fy	Fu
A572-65	65 ksi	80 ksi			

TOWER DESIGN NOTES

1. Tower is located in Cook County, Illinois.
2. Tower designed for Exposure C to the TIA-222-H Standard.
3. Tower designed for a 107 mph basic wind in accordance with the TIA-222-H Standard.
4. Tower is also designed for a 40 mph basic wind with 1.50 in ice. Ice is considered to increase in thickness with height.
5. Deflections are based upon a 60 mph wind.
6. Tower Risk Category II.
7. Topographic Category 1 with Crest Height of 0.00 ft
8. TOWER RATING: 53.2%

ALL REACTIONS ARE FACTORED

AXIAL 38 K

SHEAR 3 K — *MOMENT 242 kip-ft*

TORQUE 0 kip-ft
40 mph WIND - 1.5000 in ICE

AXIAL 21 K

SHEAR 14 K — *MOMENT 1068 kip-ft*

TORQUE 1 kip-ft
REACTIONS - 107 mph WIND

Morrison Hershfield
Consulting Engineers
1455 Lincoln Parkway, Suite 500
Atlanta, GA 30346
Phone: (770) 379-8500
FAX: (770) 379-8500

Job: CN8-477R1 / 2300001			
Project: 875515 / 180 Anets			
Client: Crown Castle USA	Drawn by: RBA	App'd:	
Code: TIA-222-H	Date: 06/15/23	Scale: NTS	
Path: C:\New folder\CN8-477 - 875515 - 180 ANETS\CN8-477R1 SA\Analysis\CN8-477R1 BU_875515 WO_2237888.eri		Dwg No. E-1	

Docusign Envelope ID: 73F002A8-3BF6-43A3-8EB8-CECE7883948A

Tower Input Data

The tower is a monopole.
This tower is designed using the TIA-222-H standard.
The following design criteria apply:

Tower is located in Cook County, Illinois.
Tower base elevation above sea level: 645.00 ft.
Basic wind speed of 107 mph.
Risk Category II.
Exposure Category C.
Simplified Topographic Factor Procedure for wind speed-up calculations is used.
Topographic Category: 1.
Crest Height: 0.00 ft.
Nominal ice thickness of 1.5000 in.
Ice thickness is considered to increase with height.
Ice density of 56 pcf.
A wind speed of 40 mph is used in combination with ice.
Temperature drop of 50 °F.
Deflections calculated using a wind speed of 60 mph.
A non-linear (P-delta) analysis was used.
Pressures are calculated at each section.
Stress ratio used in pole design is 1.
Tower analysis based on target reliabilities in accordance with Annex S.
Load Modification Factors used: $K_{es}(F_w) = 0.95$, $K_{es}(t_i) = 0.85$.
Maximum demand-capacity ratio is: 1.05.
Local bending stresses due to climbing loads, feed line supports, and appurtenance mounts are not considered.

Options

	Consider Moments - Legs		Distribute Leg Loads As Uniform		Use ASCE 10 X-Brace Ly Rules
	Consider Moments - Horizontals		Assume Legs Pinned		Calculate Redundant Bracing Forces
	Consider Moments - Diagonals	√	Assume Rigid Index Plate		Ignore Redundant Members in FEA
	Use Moment Magnification	√	Use Clear Spans For Wind Area		SR Leg Bolts Resist Compression
√	Use Code Stress Ratios		Use Clear Spans For KL/r		All Leg Panels Have Same Allowable
√	Use Code Safety Factors - Guys		Retension Guys To Initial Tension		Offset Girt At Foundation
	Escalate Ice	√	Bypass Mast Stability Checks	√	Consider Feed Line Torque
	Always Use Max Kz	√	Use Azimuth Dish Coefficients		Include Angle Block Shear Check
	Use Special Wind Profile	√	Project Wind Area of Appurt.		Use TIA-222-H Bracing Resist. Exemption
	Include Bolts In Member Capacity		Autocalc Torque Arm Areas		Use TIA-222-H Tension Splice Exemption
	Leg Bolts Are At Top Of Section		Add IBC .6D+W Combination		Poles
	Secondary Horizontal Braces Leg		Sort Capacity Reports By Component	√	Include Shear-Torsion Interaction
	Use Diamond Inner Bracing (4 Sided)		Triangulate Diamond Inner Bracing		Always Use Sub-Critical Flow
	SR Members Have Cut Ends		Treat Feed Line Bundles As Cylinder		Use Top Mounted Sockets
	SR Members Are Concentric		Ignore KL/ry For 60 Deg. Angle Legs		Pole Without Linear Attachments
					Pole With Shroud Or No Appurtenances
					Outside and Inside Corner Radii Are Known

Tapered Pole Section Geometry

Section	*Elevation*	*Section Length*	*Splice Length*	*Number of Sides*	*Top Diameter*	*Bottom Diameter*	*Wall Thickness*	*Bend Radius*	*Pole Grade*
	ft	*ft*	*ft*		*in*	*in*	*in*	*in*	
L1	100.00-55.83	44.17	4.17	12	17.0000	26.4970	0.2188	0.8750	A572-65 (65 ksi)
L2	55.83-27.08	32.92	4.92	12	25.1636	32.2310	0.2813	1.1250	A572-65 (65 ksi)
L3	27.08-0.00	32.00		12	30.6129	37.5000	0.3438	1.3750	A572-65 (65 ksi)

Docusign Envelope ID: 73F002A8-3BF6-43A3-8EB8-CECE7883948A

Tapered Pole Properties

Section	Tip Dia. in	Area in^2	I in^4	r in	C in	I/C in^3	J in^4	It/Q in^2	w in	w/t
L1	17.5225	11.8203	424.8766	6.0077	8.8060	48.2485	860.9152	5.8176	3.9697	18.147
	27.3545	18.5097	1631.4704	9.4076	13.7254	118.8647	3305.8014	9.1099	6.5149	29.783
L2	26.8782	22.5340	1780.7622	8.9079	13.0347	136.6168	3608.3069	11.0906	5.9901	21.298
	33.2688	28.9345	3769.9600	11.4380	16.6957	225.8048	7638.9611	14.2407	7.8842	28.033
L3	32.6670	33.5041	3918.1699	10.8363	15.8575	247.0869	7939.2746	16.4897	7.2830	21.187
	38.7016	41.1273	7247.3654	13.3019	19.4250	373.0947	14685.1271	20.2416	9.1288	26.556

Tower Elevation ft	Gusset Area (per face) ft^2	Gusset Thickness in	Gusset Grade	Adjust. Factor A_f	Adjust. Factor A_r	Weight Mult.	Double Angle Stitch Bolt Spacing Diagonals in	Double Angle Stitch Bolt Spacing Horizontals in	Double Angle Stitch Bolt Spacing Redundants in
L1 100.00-55.83				1	1	1			
L2 55.83-27.08				1	1	1			
L3 27.08-0.00				1	1	1			

Feed Line/Linear Appurtenances - Entered As Round Or Flat

Description	Sector	Exclude From Torque Calculation	Component Type	Placement ft	Total Number	Number Per Row	Start/End Position	Width or Diameter in	Perimeter in	Weight plf
******										
Safety Line 3/8	B	No	Surface Ar (CaAa)	100.00 - 10.00	1	1	0.000 0.000	0.3750		0.22
Climbing Pegs	B	No	Surface Ar (CaAa)	100.00 - 10.00	1	1	-0.050 0.050	0.7050		1.80
******										

Feed Line/Linear Appurtenances - Entered As Area

Description	Face or Leg	Allow Shield	Exclude From Torque Calculation	Component Type	Placement ft	Total Number		C_AA_A ft^2/ft	Weight plf
******									
***									
HCS 2.0 Part 3(1-1/2)	A	No	No	Inside Pole	98.00 - 6.00	2	No Ice	0.00	1.71
							1/2" Ice	0.00	1.71
							1" Ice	0.00	1.71
							2" Ice	0.00	1.71
***									
PWRT-608-S(13/16)	B	No	No	Inside Pole	88.00 - 8.00	7	No Ice	0.00	0.62
							1/2" Ice	0.00	0.62
							1" Ice	0.00	0.62
							2" Ice	0.00	0.62
PWRT-606-S(7/8)	B	No	No	Inside Pole	88.00 - 8.00	1	No Ice	0.00	0.89
							1/2" Ice	0.00	0.89
							1" Ice	0.00	0.89
							2" Ice	0.00	0.89
RFFT-36SM-001-XXM(3/8)	B	No	No	Inside Pole	88.00 - 8.00	2	No Ice	0.00	0.09
							1/2" Ice	0.00	0.09
							1" Ice	0.00	0.09
							2" Ice	0.00	0.09
******									

Docusign Envelope ID: 73F002A8-3BF6-43A3-8EB8-CECE7883948A

Feed Line/Linear Appurtenances Section Areas

Tower Section	Tower Elevation ft	Face	A_R ft^2	A_F ft^2	C_AA_A In Face ft^2	C_AA_A Out Face ft^2	Weight K
L1	100.00-55.83	A	0.000	0.000	0.000	0.000	0.14
		B	0.000	0.000	4.770	0.000	0.26
		C	0.000	0.000	0.000	0.000	0.00
L2	55.83-27.08	A	0.000	0.000	0.000	0.000	0.10
		B	0.000	0.000	3.105	0.000	0.21
		C	0.000	0.000	0.000	0.000	0.00
L3	27.08-0.00	A	0.000	0.000	0.000	0.000	0.07
		B	0.000	0.000	1.845	0.000	0.14
		C	0.000	0.000	0.000	0.000	0.00

Feed Line/Linear Appurtenances Section Areas - With Ice

Tower Section	Tower Elevation ft	Face or Leg	Ice Thickness in	A_R ft^2	A_F ft^2	C_AA_A In Face ft^2	C_AA_A Out Face ft^2	Weight K
L1	100.00-55.83	A	1.387	0.000	0.000	0.000	0.000	0.14
		B		0.000	0.000	29.275	0.000	0.55
		C		0.000	0.000	0.000	0.000	0.00
L2	55.83-27.08	A	1.303	0.000	0.000	0.000	0.000	0.10
		B		0.000	0.000	19.056	0.000	0.40
		C		0.000	0.000	0.000	0.000	0.00
L3	27.08-0.00	A	1.163	0.000	0.000	0.000	0.000	0.07
		B		0.000	0.000	10.748	0.000	0.24
		C		0.000	0.000	0.000	0.000	0.00

Feed Line Center of Pressure

Section	Elevation ft	CP_X in	CP_Z in	CP_X Ice in	CP_Z Ice in
L1	100.00-55.83	0.5544	-0.3201	2.0098	-1.1604
L2	55.83-27.08	0.5587	-0.3226	2.1681	-1.2518
L3	27.08-0.00	0.3477	-0.2007	1.3941	-0.8049

Note: For pole sections, center of pressure calculations do not consider feed line shielding.

Shielding Factor Ka

Tower Section	Feed Line Record No.	Description	Feed Line Segment Elev.	K_a No Ice	K_a Ice
L1	2	Safety Line 3/8	55.83 - 100.00	1.0000	1.0000
L1	3	Climbing Pegs	55.83 - 100.00	1.0000	1.0000
L2	2	Safety Line 3/8	27.08 - 55.83	1.0000	1.0000
L2	3	Climbing Pegs	27.08 - 55.83	1.0000	1.0000
L3	2	Safety Line 3/8	10.00 - 27.08	1.0000	1.0000
L3	3	Climbing Pegs	10.00 - 27.08	1.0000	1.0000

Docusign Envelope ID: 73F002A8-3BF6-43A3-8EB8-CECE7883948A

Discrete Tower Loads

Description	Face or Leg	Offset Type	Offsets: Horz Lateral Vert ft ft ft	Azimuth Adjustment °	Placement ft		C_AA_A Front ft^2	C_AA_A Side ft^2	Weight K
******									
Lightning Rod 5/8" x 4' on 6' Pole	C	From Leg	0.00 0.00 5.00	0.0000	100.00	No Ice 1/2" Ice 1" Ice 2" Ice	2.31 3.12 3.81 5.11	2.31 3.12 3.81 5.11	0.08 0.11 0.15 0.23
****** ******									
4003_840590966_TMO	A	From Leg	4.00 0.00 0.00	0.0000	98.00	No Ice 1/2" Ice 1" Ice 2" Ice	10.24 10.78 11.33 12.47	3.12 3.59 4.07 5.05	0.14 0.24 0.35 0.61
4003_840590966_TMO	B	From Leg	4.00 0.00 0.00	0.0000	98.00	No Ice 1/2" Ice 1" Ice 2" Ice	10.24 10.78 11.33 12.47	3.12 3.59 4.07 5.05	0.14 0.24 0.35 0.61
4003_840590966_TMO	C	From Leg	4.00 0.00 0.00	0.0000	98.00	No Ice 1/2" Ice 1" Ice 2" Ice	10.24 10.78 11.33 12.47	3.12 3.59 4.07 5.05	0.14 0.24 0.35 0.61
AEHC	A	From Leg	4.00 0.00 0.00	0.0000	98.00	No Ice 1/2" Ice 1" Ice 2" Ice	7.26 7.79 8.34 9.50	1.98 2.36 2.76 3.62	0.10 0.14 0.19 0.30
AEHC	B	From Leg	4.00 0.00 0.00	0.0000	98.00	No Ice 1/2" Ice 1" Ice 2" Ice	7.26 7.79 8.34 9.50	1.98 2.36 2.76 3.62	0.10 0.14 0.19 0.30
AEHC	C	From Leg	4.00 0.00 0.00	0.0000	98.00	No Ice 1/2" Ice 1" Ice 2" Ice	7.26 7.79 8.34 9.50	1.98 2.36 2.76 3.62	0.10 0.14 0.19 0.30
AHLOA_T-MOBILE	A	From Leg	4.00 0.00 0.00	0.0000	98.00	No Ice 1/2" Ice 1" Ice 2" Ice	2.86 3.08 3.31 3.80	1.85 2.04 2.23 2.65	0.08 0.11 0.13 0.20
AHLOA_T-MOBILE	B	From Leg	4.00 0.00 0.00	0.0000	98.00	No Ice 1/2" Ice 1" Ice 2" Ice	2.86 3.08 3.31 3.80	1.85 2.04 2.23 2.65	0.08 0.11 0.13 0.20
AHLOA_T-MOBILE	C	From Leg	4.00 0.00 0.00	0.0000	98.00	No Ice 1/2" Ice 1" Ice 2" Ice	2.86 3.08 3.31 3.80	1.85 2.04 2.23 2.65	0.08 0.11 0.13 0.20
AHFIG_TMO	A	From Leg	4.00 0.00 0.00	0.0000	98.00	No Ice 1/2" Ice 1" Ice 2" Ice	3.08 3.32 3.56 4.07	1.47 1.66 1.85 2.27	0.07 0.09 0.12 0.18
AHFIG_TMO	B	From Leg	4.00 0.00 0.00	0.0000	98.00	No Ice 1/2" Ice 1" Ice	3.08 3.32 3.56 4.07	1.47 1.66 1.85 2.27	0.07 0.09 0.12 0.18

Docusign Envelope ID: 73F002A8-3BF6-43A3-8EB8-CECE7883948A

Description	*Face or Leg*	*Offset Type*	*Offsets: Horz Lateral Vert* ft ft ft	*Azimuth Adjustment* °	*Placement* ft		*C_AA_A Front* ft^2	*C_AA_A Side* ft^2	*Weight* K
						2" Ice			
AHFIG_TMO	C	From Leg	4.00 0.00 0.00	0.0000	98.00	No Ice 1/2" Ice 1" Ice 2" Ice	3.08 3.32 3.56 4.07	1.47 1.66 1.85 2.27	0.07 0.09 0.12 0.18
HCS 2.0 Part 1	B	From Leg	4.00 0.00 0.00	0.0000	98.00	No Ice 1/2" Ice 1" Ice 2" Ice	1.87 2.04 2.21 2.59	0.93 1.06 1.19 1.48	0.02 0.04 0.06 0.11
HCS 2.0 Part 1	C	From Leg	4.00 0.00 0.00	0.0000	98.00	No Ice 1/2" Ice 1" Ice 2" Ice	1.87 2.04 2.21 2.59	0.93 1.06 1.19 1.48	0.02 0.04 0.06 0.11
(4) 10'6"x2-3/8" Pipe Mount	A	From Leg	4.00 0.00 0.00	0.0000	98.00	No Ice 1/2" Ice 1" Ice 2" Ice	2.49 3.57 4.67 6.32	2.49 3.57 4.67 6.32	0.04 0.05 0.08 0.15
(4) 10'6"x2-3/8" Pipe Mount	B	From Leg	4.00 0.00 0.00	0.0000	98.00	No Ice 1/2" Ice 1" Ice 2" Ice	2.49 3.57 4.67 6.32	2.49 3.57 4.67 6.32	0.04 0.05 0.08 0.15
(4) 10'6"x2-3/8" Pipe Mount	C	From Leg	4.00 0.00 0.00	0.0000	98.00	No Ice 1/2" Ice 1" Ice 2" Ice	2.49 3.57 4.67 6.32	2.49 3.57 4.67 6.32	0.04 0.05 0.08 0.15
12.5' Platform Mount with kicker [PV-LPPGS-12M-HR2-AP2-NS]	C	None		0.0000	98.00	No Ice 1/2" Ice 1" Ice 2" Ice	19.00 25.60 32.20 45.40	19.00 25.60 32.20 45.40	1.59 2.06 2.54 3.49
Kicker Support	C	None		0.0000	98.00	No Ice 1/2" Ice 1" Ice 2" Ice	11.84 16.96 22.08 32.32	11.84 16.96 22.08 32.32	0.28 0.30 0.32 0.36
******									
(2) NNH4-65B-R6 w/ Mount Pipe	A	From Leg	4.00 0.00 0.00	0.0000	88.00	No Ice 1/2" Ice 1" Ice 2" Ice	7.55 8.04 8.53 9.56	4.23 4.67 5.12 6.05	0.12 0.21 0.30 0.53
(2) NNH4-65B-R6 w/ Mount Pipe	B	From Leg	4.00 0.00 0.00	0.0000	88.00	No Ice 1/2" Ice 1" Ice 2" Ice	7.55 8.04 8.53 9.56	4.23 4.67 5.12 6.05	0.12 0.21 0.30 0.53
(2) NNH4-65B-R6 w/ Mount Pipe	C	From Leg	4.00 0.00 0.00	0.0000	88.00	No Ice 1/2" Ice 1" Ice 2" Ice	7.55 8.04 8.53 9.56	4.23 4.67 5.12 6.05	0.12 0.21 0.30 0.53
AIR 6449 B77D w/ Mount Pipe	A	From Leg	4.00 0.00 0.00	0.0000	88.00	No Ice 1/2" Ice 1" Ice 2" Ice	3.58 3.92 4.27 5.02	2.31 2.60 2.91 3.57	0.09 0.13 0.17 0.28
AIR 6449 B77D w/ Mount Pipe	B	From Leg	4.00 0.00 0.00	0.0000	88.00	No Ice 1/2" Ice	3.58 3.92 4.27	2.31 2.60 2.91	0.09 0.13 0.17

Docusign Envelope ID: 73F002A8-3BF6-43A3-8EB8-CECE7883948A

Description	*Face or Leg*	*Offset Type*	*Offsets: Horz Lateral Vert* ft ft ft	*Azimuth Adjustment* °	*Placement* ft		C_AA_A *Front* ft^2	C_AA_A *Side* ft^2	*Weight* K
						1" Ice	5.02	3.57	0.28
						2" Ice			
AIR 6449 B77D w/ Mount Pipe	C	From Leg	4.00	0.0000	88.00	No Ice	3.58	2.31	0.09
			0.00			1/2"	3.92	2.60	0.13
			0.00			Ice	4.27	2.91	0.17
						1" Ice	5.02	3.57	0.28
						2" Ice			
RRUS 4449 B5/B12	A	From Leg	4.00	0.0000	88.00	No Ice	1.97	1.41	0.07
			0.00			1/2"	2.14	1.56	0.09
			0.00			Ice	2.33	1.73	0.11
						1" Ice	2.72	2.07	0.16
						2" Ice			
RRUS 4449 B5/B12	B	From Leg	4.00	0.0000	88.00	No Ice	1.97	1.41	0.07
			0.00			1/2"	2.14	1.56	0.09
			0.00			Ice	2.33	1.73	0.11
						1" Ice	2.72	2.07	0.16
						2" Ice			
RRUS 4449 B5/B12	C	From Leg	4.00	0.0000	88.00	No Ice	1.97	1.41	0.07
			0.00			1/2"	2.14	1.56	0.09
			0.00			Ice	2.33	1.73	0.11
						1" Ice	2.72	2.07	0.16
						2" Ice			
RRUS 4478 B14	A	From Leg	4.00	0.0000	88.00	No Ice	1.84	1.06	0.06
			0.00			1/2"	2.01	1.20	0.08
			0.00			Ice	2.19	1.34	0.09
						1" Ice	2.57	1.66	0.14
						2" Ice			
RRUS 4478 B14	B	From Leg	4.00	0.0000	88.00	No Ice	1.84	1.06	0.06
			0.00			1/2"	2.01	1.20	0.08
			0.00			Ice	2.19	1.34	0.09
						1" Ice	2.57	1.66	0.14
						2" Ice			
RRUS 4478 B14	C	From Leg	4.00	0.0000	88.00	No Ice	1.84	1.06	0.06
			0.00			1/2"	2.01	1.20	0.08
			0.00			Ice	2.19	1.34	0.09
						1" Ice	2.57	1.66	0.14
						2" Ice			
(2) RRUS 4415 B25	B	From Leg	4.00	0.0000	88.00	No Ice	1.64	0.68	0.04
			0.00			1/2"	1.80	0.79	0.06
			0.00			Ice	1.97	0.91	0.07
						1" Ice	2.33	1.18	0.11
						2" Ice			
RRUS 4415 B25	C	From Leg	4.00	0.0000	88.00	No Ice	1.64	0.68	0.04
			0.00			1/2"	1.80	0.79	0.06
			0.00			Ice	1.97	0.91	0.07
						1" Ice	2.33	1.18	0.11
						2" Ice			
(3) RADIO 4415 B30	C	From Leg	4.00	0.0000	88.00	No Ice	1.64	0.64	0.04
			0.00			1/2"	1.80	0.75	0.05
			0.00			Ice	1.97	0.87	0.07
						1" Ice	2.33	1.13	0.11
						2" Ice			
(3) RRUS 8843 B2/B66A	C	From Leg	4.00	0.0000	88.00	No Ice	1.64	1.35	0.07
			0.00			1/2"	1.80	1.50	0.09
			0.00			Ice	1.97	1.65	0.11
						1" Ice	2.32	1.99	0.16
						2" Ice			
(2) DC9-48-60-24-8C-EV	A	From Leg	1.00	0.0000	88.00	No Ice	2.74	4.78	0.03
			0.00			1/2"	2.96	5.06	0.06
			0.00			Ice	3.20	5.35	0.10
						1" Ice	3.68	5.95	0.20
						2" Ice			
DC6-48-60-18-8C-EV	B	From Leg	1.00	0.0000	88.00	No Ice	2.74	2.74	0.03
			0.00			1/2"	2.96	2.96	0.05
			0.00			Ice	3.20	3.20	0.08

Docusign Envelope ID: 73F002A8-3BF6-43A3-8EB8-CECE7883948A

Description	Face or Leg	Offset Type	Offsets: Horz Lateral ft / Vert ft / ft	Azimuth Adjustment °	Placement ft		C_AA_A Front ft^2	C_AA_A Side ft^2	Weight K
						1" Ice	3.68	3.68	0.15
						2" Ice			
3' x 3" Pipe Mount	A	From Leg	4.00	0.0000	88.00	No Ice	0.90	0.90	0.02
			0.00			1/2" Ice	1.17	1.17	0.03
			0.00			1" Ice	1.44	1.44	0.04
						2" Ice	1.98	1.98	0.05
3' x 3" Pipe Mount	B	From Leg	4.00	0.0000	88.00	No Ice	0.90	0.90	0.02
			0.00			1/2" Ice	1.17	1.17	0.03
			0.00			1" Ice	1.44	1.44	0.04
						2" Ice	1.98	1.98	0.05
3' x 3" Pipe Mount	C	From Leg	4.00	0.0000	88.00	No Ice	0.90	0.90	0.02
			0.00			1/2" Ice	1.17	1.17	0.03
			0.00			1" Ice	1.44	1.44	0.04
						2" Ice	1.98	1.98	0.05
6' x 2" Mount Pipe	B	From Leg	1.00	0.0000	88.00	No Ice	1.43	1.43	0.02
			0.00			1/2" Ice	1.92	1.92	0.03
			0.00			1" Ice	2.29	2.29	0.05
						2" Ice	3.06	3.06	0.09
6' x 2" Mount Pipe	C	From Leg	1.00	0.0000	88.00	No Ice	1.43	1.43	0.02
			0.00			1/2" Ice	1.92	1.92	0.03
			0.00			1" Ice	2.29	2.29	0.05
						2" Ice	3.06	3.06	0.09
(2) 8' x 2" Mount Pipe	A	From Leg	4.00	0.0000	88.00	No Ice	1.90	1.90	0.03
			0.00			1/2" Ice	2.73	2.73	0.04
			0.00			1" Ice	3.40	3.40	0.06
						2" Ice	4.40	4.40	0.12
(2) 8' x 2" Mount Pipe	B	From Leg	4.00	0.0000	88.00	No Ice	1.90	1.90	0.03
			0.00			1/2" Ice	2.73	2.73	0.04
			0.00			1" Ice	3.40	3.40	0.06
						2" Ice	4.40	4.40	0.12
(2) 8' x 2" Mount Pipe	C	From Leg	4.00	0.0000	88.00	No Ice	1.90	1.90	0.03
			0.00			1/2" Ice	2.73	2.73	0.04
			0.00			1" Ice	3.40	3.40	0.06
						2" Ice	4.40	4.40	0.12
Platform Mount [LP 712-1_KCKR]	C	None		0.0000	88.00	No Ice	35.78	35.78	1.61
						1/2" Ice	42.14	42.14	2.33
						1" Ice	48.66	48.66	3.15
						2" Ice	62.23	62.23	5.06
Miscellaneous [NA 507-1]	C	None		0.0000	88.00	No Ice	4.56	4.56	0.25
						1/2" Ice	6.39	6.39	0.31
						1" Ice	8.18	8.18	0.40
						2" Ice	11.66	11.66	0.66
*******									

Load Combinations

Comb. No.	Description
1	Dead Only
2	1.2 Dead+1.0 Wind 0 deg - No Ice
3	0.9 Dead+1.0 Wind 0 deg - No Ice
4	1.2 Dead+1.0 Wind 30 deg - No Ice

Docusign Envelope ID: 73F002A8-3BF6-43A3-8EB8-CECE7883948A

Comb. No.	Description
5	0.9 Dead+1.0 Wind 30 deg - No Ice
6	1.2 Dead+1.0 Wind 60 deg - No Ice
7	0.9 Dead+1.0 Wind 60 deg - No Ice
8	1.2 Dead+1.0 Wind 90 deg - No Ice
9	0.9 Dead+1.0 Wind 90 deg - No Ice
10	1.2 Dead+1.0 Wind 120 deg - No Ice
11	0.9 Dead+1.0 Wind 120 deg - No Ice
12	1.2 Dead+1.0 Wind 150 deg - No Ice
13	0.9 Dead+1.0 Wind 150 deg - No Ice
14	1.2 Dead+1.0 Wind 180 deg - No Ice
15	0.9 Dead+1.0 Wind 180 deg - No Ice
16	1.2 Dead+1.0 Wind 210 deg - No Ice
17	0.9 Dead+1.0 Wind 210 deg - No Ice
18	1.2 Dead+1.0 Wind 240 deg - No Ice
19	0.9 Dead+1.0 Wind 240 deg - No Ice
20	1.2 Dead+1.0 Wind 270 deg - No Ice
21	0.9 Dead+1.0 Wind 270 deg - No Ice
22	1.2 Dead+1.0 Wind 300 deg - No Ice
23	0.9 Dead+1.0 Wind 300 deg - No Ice
24	1.2 Dead+1.0 Wind 330 deg - No Ice
25	0.9 Dead+1.0 Wind 330 deg - No Ice
26	1.2 Dead+1.0 Ice+1.0 Temp
27	1.2 Dead+1.0 Wind 0 deg+1.0 Ice+1.0 Temp
28	1.2 Dead+1.0 Wind 30 deg+1.0 Ice+1.0 Temp
29	1.2 Dead+1.0 Wind 60 deg+1.0 Ice+1.0 Temp
30	1.2 Dead+1.0 Wind 90 deg+1.0 Ice+1.0 Temp
31	1.2 Dead+1.0 Wind 120 deg+1.0 Ice+1.0 Temp
32	1.2 Dead+1.0 Wind 150 deg+1.0 Ice+1.0 Temp
33	1.2 Dead+1.0 Wind 180 deg+1.0 Ice+1.0 Temp
34	1.2 Dead+1.0 Wind 210 deg+1.0 Ice+1.0 Temp
35	1.2 Dead+1.0 Wind 240 deg+1.0 Ice+1.0 Temp
36	1.2 Dead+1.0 Wind 270 deg+1.0 Ice+1.0 Temp
37	1.2 Dead+1.0 Wind 300 deg+1.0 Ice+1.0 Temp
38	1.2 Dead+1.0 Wind 330 deg+1.0 Ice+1.0 Temp
39	Dead+Wind 0 deg - Service
40	Dead+Wind 30 deg - Service
41	Dead+Wind 60 deg - Service
42	Dead+Wind 90 deg - Service
43	Dead+Wind 120 deg - Service
44	Dead+Wind 150 deg - Service
45	Dead+Wind 180 deg - Service
46	Dead+Wind 210 deg - Service
47	Dead+Wind 240 deg - Service
48	Dead+Wind 270 deg - Service
49	Dead+Wind 300 deg - Service
50	Dead+Wind 330 deg - Service

Maximum Member Forces

Section No.	Elevation ft	Component Type	Condition	Gov. Load Comb.	Axial K	Major Axis Moment kip-ft	Minor Axis Moment kip-ft
L1	100 - 55.8333	Pole	Max Tension	20	0.00	-0.00	0.00
			Max. Compression	26	-24.46	2.48	-2.66
			Max. Mx	20	-11.61	318.75	-2.47
			Max. My	14	-11.64	2.49	-310.54
			Max. Vy	20	-10.64	318.75	-2.47
			Max. Vx	14	10.36	2.49	-310.54
			Max. Torque	25			0.55
L2	55.8333 - 27.0833	Pole	Max Tension	1	0.00	0.00	0.00
			Max. Compression	26	-29.76	2.31	-2.61
			Max. Mx	20	-15.38	640.93	-3.49
			Max. My	14	-15.39	3.49	-625.01
			Max. Vy	20	-12.38	640.93	-3.49
			Max. Vx	14	12.11	3.49	-625.01

Docusign Envelope ID: 73F002A8-3BF6-43A3-8EB8-CECE7883948A

Section No.	Elevation ft	Component Type	Condition	Gov. Load Comb.	Axial K	Major Axis Moment kip-ft	Minor Axis Moment kip-ft
			Max. Torque	25			0.55
L3	27.0833 - 0	Pole	Max Tension	1	0.00	0.00	0.00
			Max. Compression	26	-37.56	2.08	-2.48
			Max. Mx	20	-21.42	1067.82	-4.61
			Max. My	14	-21.42	4.58	-1043.29
			Max. Vy	20	-14.26	1067.82	-4.61
			Max. Vx	14	13.99	4.58	-1043.29
			Max. Torque	25			0.55

Maximum Reactions

Location	Condition	Gov. Load Comb.	Vertical K	Horizontal, X K	Horizontal, Z K
Pole	Max. Vert	35	37.56	2.57	-1.47
	Max. H_x	20	21.43	14.25	-0.04
	Max. H_z	2	21.43	-0.04	13.98
	Max. M_x	2	1040.54	-0.04	13.98
	Max. M_z	8	1065.13	-14.25	0.04
	Max. Torsion	25	0.55	7.09	12.09
	Min. Vert	25	16.07	7.09	12.09
	Min. H_x	8	21.43	-14.25	0.04
	Min. H_z	14	21.43	0.04	-13.98
	Min. M_x	14	-1043.29	0.04	-13.98
	Min. M_z	20	-1067.82	14.25	-0.04
	Min. Torsion	13	-0.55	-7.09	-12.09

Tower Mast Reaction Summary

Load Combination	Vertical K	$Shear_x$ K	$Shear_z$ K	Overturning Moment, M_x kip-ft	Overturning Moment, M_z kip-ft	Torque kip-ft
Dead Only	17.86	0.00	0.00	1.12	1.09	-0.00
1.2 Dead+1.0 Wind 0 deg - No Ice	21.43	0.04	-13.98	-1040.54	-1.88	-0.50
0.9 Dead+1.0 Wind 0 deg - No Ice	16.07	0.04	-13.98	-1030.11	-2.21	-0.50
1.2 Dead+1.0 Wind 30 deg - No Ice	21.43	7.15	-12.13	-902.55	-534.71	-0.31
0.9 Dead+1.0 Wind 30 deg - No Ice	16.07	7.15	-12.13	-893.56	-529.51	-0.32
1.2 Dead+1.0 Wind 60 deg - No Ice	21.43	12.36	-7.02	-522.36	-923.88	-0.05
0.9 Dead+1.0 Wind 60 deg - No Ice	16.07	12.36	-7.02	-517.30	-914.64	-0.05
1.2 Dead+1.0 Wind 90 deg - No Ice	21.43	14.25	-0.04	-1.85	-1065.13	0.23
0.9 Dead+1.0 Wind 90 deg - No Ice	16.07	14.25	-0.04	-2.18	-1054.43	0.24
1.2 Dead+1.0 Wind 120 deg - No Ice	21.43	12.32	6.96	519.53	-920.65	0.45
0.9 Dead+1.0 Wind 120 deg - No Ice	16.07	12.32	6.96	513.79	-911.45	0.45
1.2 Dead+1.0 Wind 150 deg - No Ice	21.43	7.09	12.09	902.08	-529.11	0.54
0.9 Dead+1.0 Wind 150 deg - No Ice	16.07	7.09	12.09	892.39	-523.97	0.55
1.2 Dead+1.0 Wind 180 deg - No Ice	21.43	-0.04	13.98	1043.29	4.58	0.50
0.9 Dead+1.0 Wind 180 deg - No Ice	16.07	-0.04	13.98	1032.13	4.19	0.50

Docusign Envelope ID: 73F002A8-3BF6-43A3-8EB8-CECE7883948A

Load Combination	Vertical	$Shear_x$	$Shear_z$	Overturning Moment, M_x	Overturning Moment, M_z	Torque
	K	K	K	kip-ft	kip-ft	kip-ft
1.2 Dead+1.0 Wind 210 deg - No Ice	21.43	-7.15	12.13	905.31	537.40	0.31
0.9 Dead+1.0 Wind 210 deg - No Ice	16.07	-7.15	12.13	895.58	531.48	0.32
1.2 Dead+1.0 Wind 240 deg - No Ice	21.43	-12.36	7.02	525.12	926.57	0.05
0.9 Dead+1.0 Wind 240 deg - No Ice	16.07	-12.36	7.02	519.33	916.61	0.05
1.2 Dead+1.0 Wind 270 deg - No Ice	21.43	-14.25	0.04	4.61	1067.82	-0.23
0.9 Dead+1.0 Wind 270 deg - No Ice	16.07	-14.25	0.04	4.21	1056.41	-0.24
1.2 Dead+1.0 Wind 300 deg - No Ice	21.43	-12.32	-6.96	-516.77	923.35	-0.45
0.9 Dead+1.0 Wind 300 deg - No Ice	16.07	-12.32	-6.96	-511.77	913.43	-0.45
1.2 Dead+1.0 Wind 330 deg - No Ice	21.43	-7.09	-12.09	-899.33	531.81	-0.55
0.9 Dead+1.0 Wind 330 deg - No Ice	16.07	-7.09	-12.09	-890.37	525.95	-0.55
1.2 Dead+1.0 Ice+1.0 Temp	37.56	-0.00	0.00	2.48	2.08	-0.00
1.2 Dead+1.0 Wind 0 deg+1.0 Ice+1.0 Temp	37.56	0.01	-2.93	-232.53	1.58	-0.10
1.2 Dead+1.0 Wind 30 deg+1.0 Ice+1.0 Temp	37.56	1.49	-2.54	-201.31	-117.86	-0.05
1.2 Dead+1.0 Wind 60 deg+1.0 Ice+1.0 Temp	37.56	2.57	-1.47	-115.47	-205.15	0.01
1.2 Dead+1.0 Wind 90 deg+1.0 Ice+1.0 Temp	37.56	2.97	-0.01	1.99	-236.90	0.07
1.2 Dead+1.0 Wind 120 deg+1.0 Ice+1.0 Temp	37.56	2.57	1.46	119.58	-204.61	0.11
1.2 Dead+1.0 Wind 150 deg+1.0 Ice+1.0 Temp	37.56	1.48	2.53	205.81	-116.93	0.12
1.2 Dead+1.0 Wind 180 deg+1.0 Ice+1.0 Temp	37.56	-0.01	2.93	237.57	2.65	0.10
1.2 Dead+1.0 Wind 210 deg+1.0 Ice+1.0 Temp	37.56	-1.49	2.54	206.35	122.09	0.05
1.2 Dead+1.0 Wind 240 deg+1.0 Ice+1.0 Temp	37.56	-2.57	1.47	120.51	209.39	-0.01
1.2 Dead+1.0 Wind 270 deg+1.0 Ice+1.0 Temp	37.56	-2.97	0.01	3.06	241.14	-0.07
1.2 Dead+1.0 Wind 300 deg+1.0 Ice+1.0 Temp	37.56	-2.57	-1.46	-114.54	208.85	-0.11
1.2 Dead+1.0 Wind 330 deg+1.0 Ice+1.0 Temp	37.56	-1.48	-2.53	-200.77	121.16	-0.12
Dead+Wind 0 deg - Service	17.86	0.01	-4.14	-305.53	0.16	-0.15
Dead+Wind 30 deg - Service	17.86	2.12	-3.59	-264.92	-156.66	-0.09
Dead+Wind 60 deg - Service	17.86	3.66	-2.08	-153.02	-271.21	-0.01
Dead+Wind 90 deg - Service	17.86	4.22	-0.01	0.19	-312.79	0.07
Dead+Wind 120 deg - Service	17.86	3.65	2.06	153.65	-270.26	0.13
Dead+Wind 150 deg - Service	17.86	2.10	3.58	266.24	-155.02	0.16
Dead+Wind 180 deg - Service	17.86	-0.01	4.14	307.80	2.06	0.15
Dead+Wind 210 deg - Service	17.86	-2.12	3.59	267.19	158.89	0.09
Dead+Wind 240 deg - Service	17.86	-3.66	2.08	155.29	273.43	0.01
Dead+Wind 270 deg - Service	17.86	-4.22	0.01	2.09	315.01	-0.07
Dead+Wind 300 deg - Service	17.86	-3.65	-2.06	-151.37	272.48	-0.13
Dead+Wind 330 deg - Service	17.86	-2.10	-3.58	-263.97	157.24	-0.16

Docusign Envelope ID: 73F002A8-3BF6-43A3-8EB8-CECE7883948A

Solution Summary

Load Comb.	Sum of Applied Forces PX K	PY K	PZ K	Sum of Reactions PX K	PY K	PZ K	% Error
1	0.00	-17.86	0.00	0.00	17.86	0.00	0.000%
2	0.04	-21.43	-13.98	-0.04	21.43	13.98	0.000%
3	0.04	-16.07	-13.98	-0.04	16.07	13.98	0.000%
4	7.15	-21.43	-12.13	-7.15	21.43	12.13	0.000%
5	7.15	-16.07	-12.13	-7.15	16.07	12.13	0.000%
6	12.36	-21.43	-7.02	-12.36	21.43	7.02	0.000%
7	12.36	-16.07	-7.02	-12.36	16.07	7.02	0.000%
8	14.25	-21.43	-0.04	-14.25	21.43	0.04	0.000%
9	14.25	-16.07	-0.04	-14.25	16.07	0.04	0.000%
10	12.32	-21.43	6.96	-12.32	21.43	-6.96	0.000%
11	12.32	-16.07	6.96	-12.32	16.07	-6.96	0.000%
12	7.09	-21.43	12.09	-7.09	21.43	-12.09	0.000%
13	7.09	-16.07	12.09	-7.09	16.07	-12.09	0.000%
14	-0.04	-21.43	13.98	0.04	21.43	-13.98	0.000%
15	-0.04	-16.07	13.98	0.04	16.07	-13.98	0.000%
16	-7.15	-21.43	12.13	7.15	21.43	-12.13	0.000%
17	-7.15	-16.07	12.13	7.15	16.07	-12.13	0.000%
18	-12.36	-21.43	7.02	12.36	21.43	-7.02	0.000%
19	-12.36	-16.07	7.02	12.36	16.07	-7.02	0.000%
20	-14.25	-21.43	0.04	14.25	21.43	-0.04	0.000%
21	-14.25	-16.07	0.04	14.25	16.07	-0.04	0.000%
22	-12.32	-21.43	-6.96	12.32	21.43	6.96	0.000%
23	-12.32	-16.07	-6.96	12.32	16.07	6.96	0.000%
24	-7.09	-21.43	-12.09	7.09	21.43	12.09	0.000%
25	-7.09	-16.07	-12.09	7.09	16.07	12.09	0.000%
26	0.00	-37.56	0.00	0.00	37.56	-0.00	0.000%
27	0.01	-37.56	-2.93	-0.01	37.56	2.93	0.000%
28	1.49	-37.56	-2.54	-1.49	37.56	2.54	0.000%
29	2.57	-37.56	-1.47	-2.57	37.56	1.47	0.000%
30	2.97	-37.56	-0.01	-2.97	37.56	0.01	0.000%
31	2.57	-37.56	1.46	-2.57	37.56	-1.46	0.000%
32	1.48	-37.56	2.53	-1.48	37.56	-2.53	0.000%
33	-0.01	-37.56	2.93	0.01	37.56	-2.93	0.000%
34	-1.49	-37.56	2.54	1.49	37.56	-2.54	0.000%
35	-2.57	-37.56	1.47	2.57	37.56	-1.47	0.000%
36	-2.97	-37.56	0.01	2.97	37.56	-0.01	0.000%
37	-2.57	-37.56	-1.46	2.57	37.56	1.46	0.000%
38	-1.48	-37.56	-2.53	1.48	37.56	2.53	0.000%
39	0.01	-17.86	-4.14	-0.01	17.86	4.14	0.000%
40	2.12	-17.86	-3.59	-2.12	17.86	3.59	0.000%
41	3.66	-17.86	-2.08	-3.66	17.86	2.08	0.000%
42	4.22	-17.86	-0.01	-4.22	17.86	0.01	0.000%
43	3.65	-17.86	2.06	-3.65	17.86	-2.06	0.000%
44	2.10	-17.86	3.58	-2.10	17.86	-3.58	0.000%
45	-0.01	-17.86	4.14	0.01	17.86	-4.14	0.000%
46	-2.12	-17.86	3.59	2.12	17.86	-3.59	0.000%
47	-3.66	-17.86	2.08	3.66	17.86	-2.08	0.000%
48	-4.22	-17.86	0.01	4.22	17.86	-0.01	0.000%
49	-3.65	-17.86	-2.06	3.65	17.86	2.06	0.000%
50	-2.10	-17.86	-3.58	2.10	17.86	3.58	0.000%

Non-Linear Convergence Results

Load Combination	Converged?	Number of Cycles	Displacement Tolerance	Force Tolerance
1	Yes	4	0.00000001	0.00000001
2	Yes	4	0.00000001	0.00045705
3	Yes	4	0.00000001	0.00026615
4	Yes	5	0.00000001	0.00034486
5	Yes	5	0.00000001	0.00016201
6	Yes	5	0.00000001	0.00035479
7	Yes	5	0.00000001	0.00016659
8	Yes	4	0.00000001	0.00031965

Docusign Envelope ID: 73F002A8-3BF6-43A3-8EB8-CECE7883948A

9	Yes	4	0.00000001	0.00014890
10	Yes	5	0.00000001	0.00036239
11	Yes	5	0.00000001	0.00017026
12	Yes	5	0.00000001	0.00033798
13	Yes	5	0.00000001	0.00015833
14	Yes	4	0.00000001	0.00054193
15	Yes	4	0.00000001	0.00032604
16	Yes	5	0.00000001	0.00036570
17	Yes	5	0.00000001	0.00017119
18	Yes	5	0.00000001	0.00036033
19	Yes	5	0.00000001	0.00016807
20	Yes	4	0.00000001	0.00038512
21	Yes	4	0.00000001	0.00020213
22	Yes	5	0.00000001	0.00034141
23	Yes	5	0.00000001	0.00015966
24	Yes	5	0.00000001	0.00036136
25	Yes	5	0.00000001	0.00017016
26	Yes	4	0.00000001	0.00006646
27	Yes	5	0.00000001	0.00023007
28	Yes	5	0.00000001	0.00024473
29	Yes	5	0.00000001	0.00024691
30	Yes	5	0.00000001	0.00023475
31	Yes	5	0.00000001	0.00025449
32	Yes	5	0.00000001	0.00025486
33	Yes	5	0.00000001	0.00024216
34	Yes	5	0.00000001	0.00026421
35	Yes	5	0.00000001	0.00026591
36	Yes	5	0.00000001	0.00024573
37	Yes	5	0.00000001	0.00025596
38	Yes	5	0.00000001	0.00025169
39	Yes	4	0.00000001	0.00005462
40	Yes	4	0.00000001	0.00018975
41	Yes	4	0.00000001	0.00020171
42	Yes	4	0.00000001	0.00004501
43	Yes	4	0.00000001	0.00022001
44	Yes	4	0.00000001	0.00018638
45	Yes	4	0.00000001	0.00005751
46	Yes	4	0.00000001	0.00022228
47	Yes	4	0.00000001	0.00021207
48	Yes	4	0.00000001	0.00004712
49	Yes	4	0.00000001	0.00018890
50	Yes	4	0.00000001	0.00022060

Maximum Tower Deflections - Service Wind

Section No.	*Elevation*	*Horz. Deflection*	*Gov. Load Comb.*	*Tilt*	*Twist*
	ft	*in*		*°*	*°*
L1	100 - 55.8333	13.957	48	1.2213	0.0028
L2	60 - 27.0833	4.926	48	0.7992	0.0009
L3	32 - 0	1.365	48	0.3880	0.0003

Critical Deflections and Radius of Curvature - Service Wind

Elevation	*Appurtenance*	*Gov. Load Comb.*	*Deflection*	*Tilt*	*Twist*	*Radius of Curvature*
ft			*in*	*°*	*°*	*ft*
100.00	Lightning Rod 5/8" x 4' on 6' Pole	48	13.957	1.2213	0.0028	26212
98.00	4003_840590966_TMO	48	13.457	1.2031	0.0027	26212
88.00	(2) NNH4-65B-R6 w/ Mount Pipe	48	10.982	1.1104	0.0021	10921

Docusign Envelope ID: 73F002A8-3BF6-43A3-8EB8-CECE7883948A

Maximum Tower Deflections - Design Wind

Section No.	Elevation ft	Horz. Deflection in	Gov. Load Comb.	Tilt °	Twist °
L1	100 - 55.8333	47.242	20	4.1228	0.0093
L2	60 - 27.0833	16.703	20	2.7098	0.0032
L3	32 - 0	4.627	20	1.3158	0.0011

Critical Deflections and Radius of Curvature - Design Wind

Elevation ft	Appurtenance	Gov. Load Comb.	Deflection in	Tilt °	Twist °	Radius of Curvature ft
100.00	Lightning Rod 5/8" x 4' on 6' Pole	20	47.242	4.1228	0.0094	7865
98.00	4003_840590966_TMO	20	45.552	4.0623	0.0091	7865
88.00	(2) NNH4-65B-R6 w/ Mount Pipe	20	37.185	3.7545	0.0073	3276

Compression Checks

Pole Design Data

Section No.	Elevation ft	Size	L ft	L_u ft	Kl/r	A in^2	P_u K	ϕP_n K	Ratio $\frac{P_u}{\phi P_n}$
L1	100 - 55.8333 (1)	TP26.497x17x0.2188	44.17	0.00	0.0	17.8787	-11.61	1045.90	0.011
L2	55.8333 - 27.0833 (2)	TP32.231x25.1636x0.2813	32.92	0.00	0.0	27.9785	-15.38	1636.74	0.009
L3	27.0833 - 0 (3)	TP37.5x30.6129x0.3438	32.00	0.00	0.0	41.1273	-21.42	2405.95	0.009

Pole Bending Design Data

Section No.	Elevation ft	Size	M_{ux} kip-ft	ϕM_{nx} kip-ft	Ratio $\frac{M_{ux}}{\phi M_{nx}}$	M_{uy} kip-ft	ϕM_{ny} kip-ft	Ratio $\frac{M_{uy}}{\phi M_{ny}}$
L1	100 - 55.8333 (1)	TP26.497x17x0.2188	318.76	598.41	0.533	0.00	598.41	0.000
L2	55.8333 - 27.0833 (2)	TP32.231x25.1636x0.2813	640.94	1167.88	0.549	0.00	1167.88	0.000
L3	27.0833 - 0 (3)	TP37.5x30.6129x0.3438	1067.83	2078.78	0.514	0.00	2078.78	0.000

Pole Shear Design Data

Section No.	Elevation ft	Size	Actual V_u K	ϕV_n K	Ratio $\frac{V_u}{\phi V_n}$	Actual T_u kip-ft	ϕT_n kip-ft	Ratio $\frac{T_u}{\phi T_n}$
L1	100 - 55.8333 (1)	TP26.497x17x0.2188	10.64	313.77	0.034	0.23	700.56	0.000
L2	55.8333 - 27.0833 (2)	TP32.231x25.1636x0.2813	12.38	491.02	0.025	0.23	1334.38	0.000

Docusign Envelope ID: 73F002A8-3BF6-43A3-8EB8-CECE7883948A

Section No.	Elevation ft	Size	Actual V_u K	ϕV_n K	Ratio $\frac{V_u}{\phi V_n}$	Actual T_u kip-ft	ϕT_n kip-ft	Ratio $\frac{T_u}{\phi T_n}$
L3	27.0833 - 0 (3)	TP37.5x30.6129x0.3438	14.26	721.78	0.020	0.23	2359.06	0.000

Pole Interaction Design Data

Section No.	Elevation ft	Ratio $\frac{P_u}{\phi P_n}$	Ratio $\frac{M_{ux}}{\phi M_{nx}}$	Ratio $\frac{M_{uy}}{\phi M_{ny}}$	Ratio $\frac{V_u}{\phi V_n}$	Ratio $\frac{T_u}{\phi T_n}$	Comb. Stress Ratio	Allow. Stress Ratio	Criteria
L1	100 - 55.8333 (1)	0.011	0.533	0.000	0.034	0.000	0.545	1.050	4.8.2
L2	55.8333 - 27.0833 (2)	0.009	0.549	0.000	0.025	0.000	0.559	1.050	4.8.2
L3	27.0833 - 0 (3)	0.009	0.514	0.000	0.020	0.000	0.523	1.050	4.8.2

Section Capacity Table

Section No.	Elevation ft	Component Type	Size	Critical Element	P K	ϕP_{allow} K	% Capacity	Pass Fail
L1	100 - 55.8333	Pole	TP26.497x17x0.2188	1	-11.61	1098.19	51.9	Pass
L2	55.8333 - 27.0833	Pole	TP32.231x25.1636x0.2813	2	-15.38	1718.58	53.2	Pass
L3	27.0833 - 0	Pole	TP37.5x30.6129x0.3438	3	-21.42	2526.25	49.8	Pass
							Summary	
						Pole (L2)	53.2	Pass
						RATING =	**53.2**	**Pass**

Docusign Envelope ID: 73F002A8-3BF6-43A3-8EB8-CECE7883948A

APPENDIX B

BASE LEVEL DRAWING

Docusign Envelope ID: 73F002A8-3BF6-43A3-8EB8-CECE7883948A

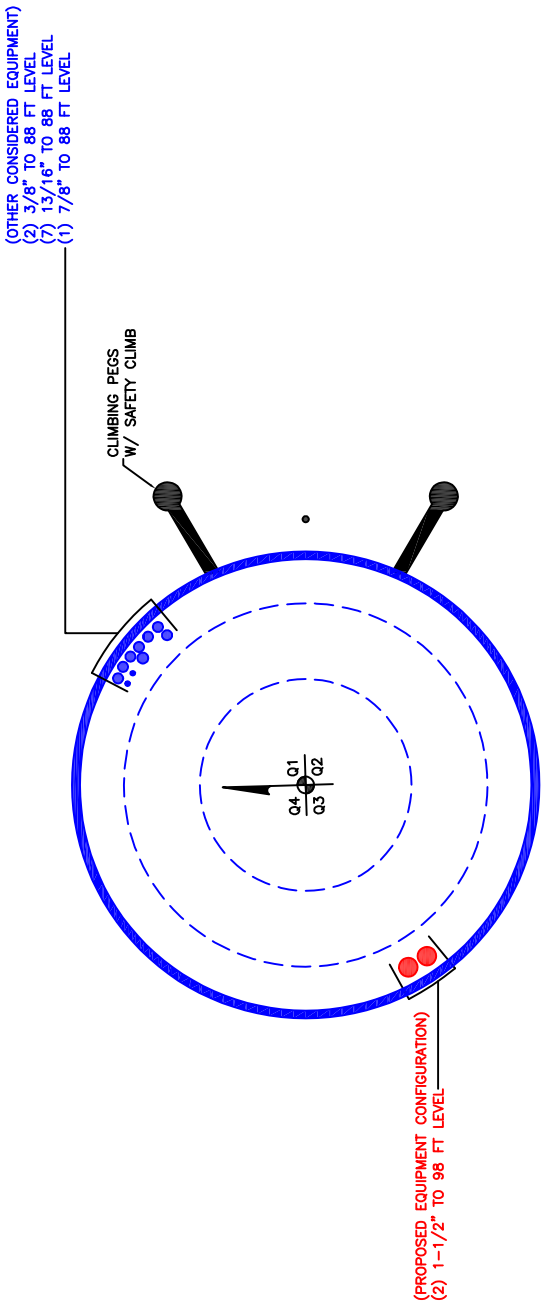

BUSINESS UNIT:875515 TOWER ID:C_BASELEVEL

Docusign Envelope ID: 73F002A8-3BF6-43A3-8EB8-CECE7883948A

APPENDIX C

ADDITIONAL CALCULATIONS

Monopole Base Plate Connection

Site Info	
BU #	875515
Site Name	180 Anets
Order #	652107 Rev. 0

Analysis Considerations	
TIA-222 Revision	H
Grout Considered:	No
l_{ar} (in)	1.125

Applied Loads	
Moment (kip-ft)	1067.83
Axial Force (kips)	21.42
Shear Force (kips)	14.26

**TIA-222-H Section 15.5 Applied*

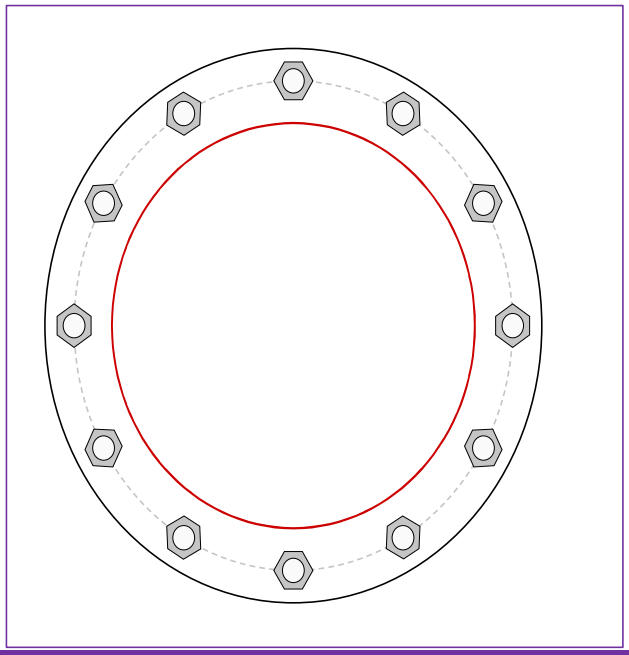

Connection Properties

Anchor Rod Data

(12) 2-1/4" ø bolts (A615-75 N; Fy=75 ksi, Fu=100 ksi) on 45.32" BC

Base Plate Data

51.32" OD x 2.5" Plate (A633 Gr. E; Fy=60 ksi, Fu=70 ksi)

Stiffener Data

N/A

Pole Data

37.5" x 0.34375" 12-sided pole (A572-65; Fy=65 ksi, Fu=80 ksi)

Analysis Results

Anchor Rod Summary		*(units of kips, kip-in)*
Pu_t = 92.37	ϕPn_t = 243.75	**Stress Rating**
Vu = 1.19	ϕVn = 149.1	**36.1%**
Mu = n/a	ϕMn = n/a	**Pass**

Base Plate Summary		
Max Stress (ksi):	14.64	(Flexural)
Allowable Stress (ksi):	54	
Stress Rating:	**25.8%**	**Pass**

Drilled Pier Foundation

BU # :	875515
Site Name:	180 Anets
Order Number:	652107 Rev. 0
TIA-222 Revison:	H
Tower Type:	Monopole

Check Limitation	
Apply TIA-222-H Section 15.5:	☑
N/A	☐
Additional Longitudinal Rebar	
Input Effective Depths (else Actual):	☐
Shear Design Options	
Check Shear along Depth of Pier:	☑
Utilize Shear-Friction Methodology:	☐
Override Critical Depth:	☐

Go to Soil Calculations

Applied Loads	Comp.	Uplift
Moment (kip-ft)	1067.83	
Axial Force (kips)	21.43	
Shear Force (kips)	14.25	

Material Properties			Rebar 2, Fy Override (ksi)	Rebar 3, Fy Override (ksi)
Concrete Strength, f'c:	3	ksi		
Rebar Strength, Fy:	60	ksi		
Tie Yield Strength, Fyt:	60	ksi		

Pier Design Data		
Depth	21.5	ft
Ext. Above Grade	0.5	ft
Pier Section 1		
From 0.5' above grade to 21.5' below grade		
Pier Diameter	5.5	ft
Rebar Quantity	24	
Rebar Size	8	
Clear Cover to Ties	3	in
Tie Size	4	
Tie Spacing		in

Rebar & Pier Options

Embedded Pole Inputs

Belled Pier Inputs

Analysis Results		
Soil Lateral Check	*Compression*	*Uplift*
$D_{v=0}$ (ft from TOC)	5.93	-
Soil Safety Factor	5.59	-
Max Moment (kip-ft)	1147.24	-
Rating*	*22.7%*	-
Soil Vertical Check	*Compression*	*Uplift*
Skin Friction (kips)	178.19	-
End Bearing (kips)	35.64	-
Weight of Concrete (kips)	94.08	-
Total Capacity (kips)	213.82	-
Axial (kips)	115.51	-
Rating*	*51.4%*	-
Reinforced Concrete Flexure	*Compression*	*Uplift*
Critical Depth (ft from TOC)	6.23	-
Critical Moment (kip-ft)	1146.17	-
Critical Moment Capacity	2371.94	-
Rating*	*46.0%*	-
Reinforced Concrete Shear	*Compression*	*Uplift*
Critical Depth (ft from TOC)	13.32	-
Critical Shear (kip)	134.92	-
Critical Shear Capacity	299.40	-
Rating*	*42.9%*	-

Structural Foundation Rating*	**46.0%**
Soil Interaction Rating*	**51.4%**

*Rating per TIA-222-H Section 15.5

Soil Profile

Groundwater Depth	n/a	# of Layers	7

Layer	Top (ft)	Bottom (ft)	Thickness (ft)	γ_{soil} (pcf)	$\gamma_{concrete}$ (pcf)	Cohesion (ksf)	Angle of Friction (degrees)	Calculated Ultimate Skin Friction Comp (ksf)	Calculated Ultimate Skin Friction Uplift (ksf)	Ultimate Skin Friction Comp Override (ksf)	Ultimate Skin Friction Uplift Override (ksf)	Ult. Gross Bearing Capacity (ksf)	SPT Blow Count	Soil Type
1	0	4	4	110	150	0	0	0.000	0.000	0.00	0.00			Cohesionless
2	4	5	1	110	150	0	30	0.000	0.000	0.00	0.00			Cohesionless
3	5	8	3	130	150	3	0	1.650	1.650	1.65	1.65			Cohesive
4	8	13	5	130	150	2	0	1.100	1.100	1.10	1.10			Cohesive
5	13	16	3	130	150	2	0	1.100	1.100	1.10	1.10			Cohesive
6	16	18	2	130	150	2	0	1.100	1.100	0.00	0.00			Cohesive
7	18	21.5	3.5	130	150	2	0	1.10	1.10	0.00	0.00	2		Cohesive

Docusign Envelope ID: 73F002A8-3BF6-43A3-8EB8-CECE7883948A

ASCE 7 Hazards Report

Address:
No Address at This Location

Standard:	ASCE/SEI 7-16	**Latitude:**	42.118058
Risk Category:	II	**Longitude:**	-87.823825
Soil Class:	D - Default (see Section 11.4.3)	**Elevation:**	645.1146389802819 ft (NAVD 88)

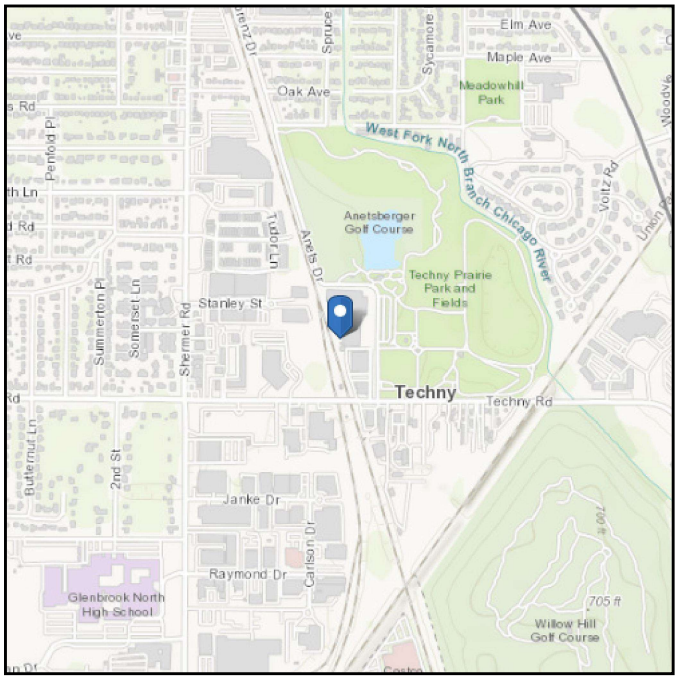

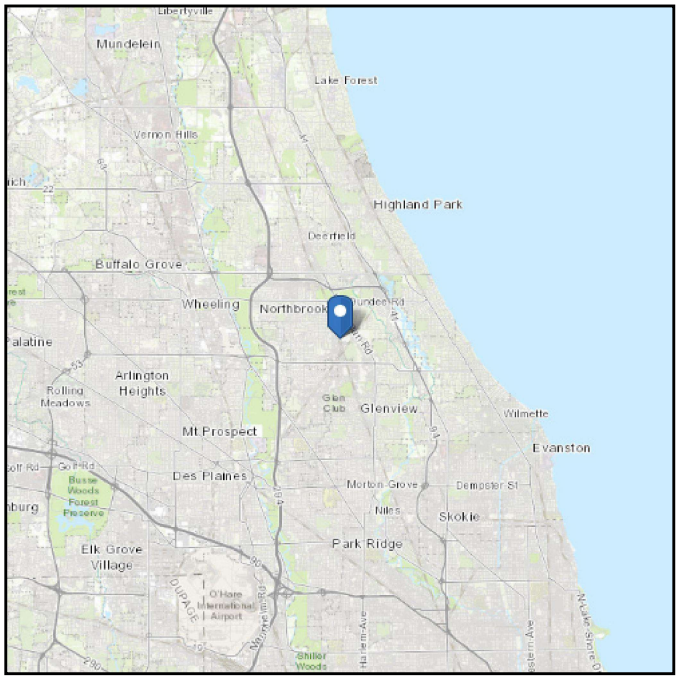

Wind

Results:

Wind Speed	107 Vmph
10-year MRI	73 Vmph
25-year MRI	82 Vmph
50-year MRI	85 Vmph
100-year MRI	92 Vmph

Data Source: ASCE/SEI 7-16, Fig. 26.5-1B and Figs. CC.2-1–CC.2-4, and Section 26.5.2
Date Accessed: Thu Jun 15 2023

Value provided is 3-second gust wind speeds at 33 ft above ground for Exposure C Category, based on linear interpolation between contours. Wind speeds are interpolated in accordance with the 7-16 Standard. Wind speeds correspond to approximately a 7% probability of exceedance in 50 years (annual exceedance probability = 0.00143, MRI = 700 years).

Site is not in a hurricane-prone region as defined in ASCE/SEI 7-16 Section 26.2.

ASCE
AMERICAN SOCIETY OF CIVIL ENGINEERS

Seismic

D - Default (see Section 11.4.3)

Site Soil Class:

Results:

S_S :	0.111	S_{D1} :	0.096
S_1 :	0.06	T_L :	12
F_a :	1.6	PGA :	0.055
F_v :	2.4	PGA_M :	0.089
S_{MS} :	0.177	F_{PGA} :	1.6
S_{M1} :	0.144	I_e :	1
S_{DS} :	0.118	C_v :	0.7

Seismic Design Category: B

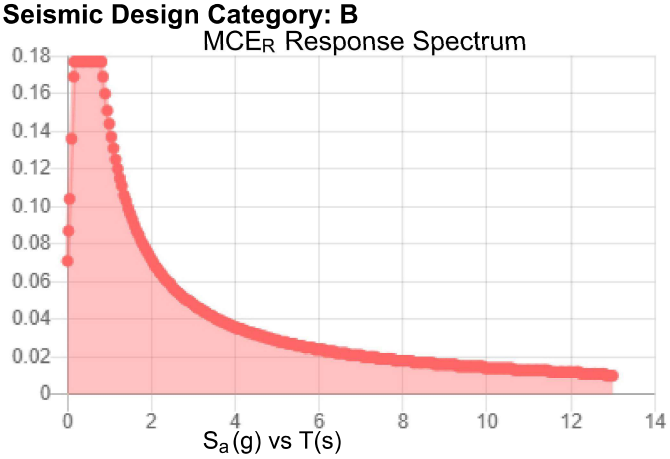

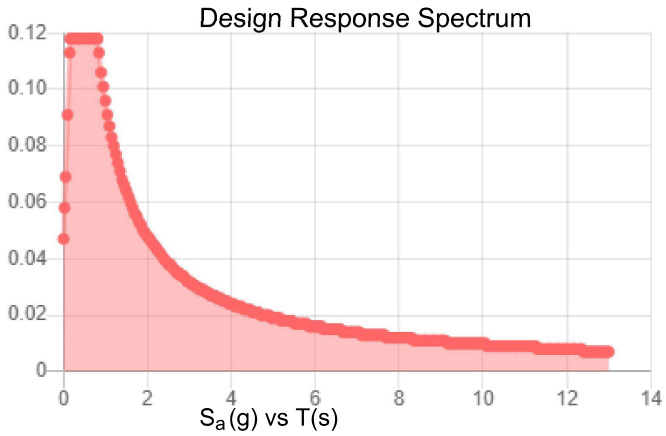

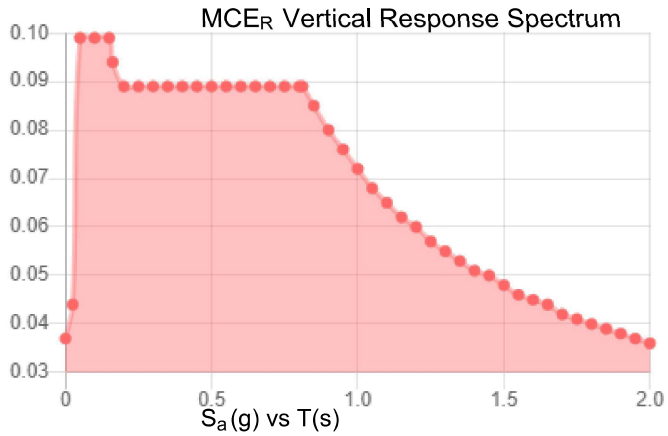

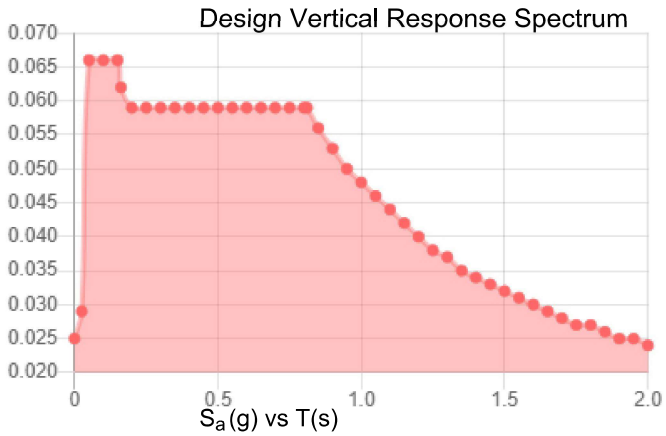

Data Accessed: **Thu Jun 15 2023**

Date Source:

USGS Seismic Design Maps based on ASCE/SEI 7-16 and ASCE/SEI 7-16 Table 1.5-2. Additional data for site-specific ground motion procedures in accordance with ASCE/SEI 7-16 Ch. 21 are available from USGS.

Ice

Results:

Ice Thickness:	1.50 in.
Concurrent Temperature:	5 F
Gust Speed	40 mph
Data Source:	Standard ASCE/SEI 7-16, Figs. 10-2 through 10-8
Date Accessed:	Thu Jun 15 2023

Ice thicknesses on structures in exposed locations at elevations higher than the surrounding terrain and in valleys and gorges may exceed the mapped values.

Values provided are equivalent radial ice thicknesses due to freezing rain with concurrent 3-second gust speeds, for a 500-year mean recurrence interval, and temperatures concurrent with ice thicknesses due to freezing rain. Thicknesses for ice accretions caused by other sources shall be obtained from local meteorological studies. Ice thicknesses in exposed locations at elevations higher than the surrounding terrain and in valleys and gorges may exceed the mapped values.

The ASCE 7 Hazard Tool is provided for your convenience, for informational purposes only, and is provided “as is” and without warranties of any kind. The location data included herein has been obtained from information developed, produced, and maintained by third party providers; or has been extrapolated from maps incorporated in the ASCE 7 standard. While ASCE has made every effort to use data obtained from reliable sources or methodologies, ASCE does not make any representations or warranties as to the accuracy, completeness, reliability, currency, or quality of any data provided herein. Any third-party links provided by this Tool should not be construed as an endorsement, affiliation, relationship, or sponsorship of such third-party content by or from ASCE.

ASCE does not intend, nor should anyone interpret, the results provided by this Tool to replace the sound judgment of a competent professional, having knowledge and experience in the appropriate field(s) of practice, nor to substitute for the standard of care required of such professionals in interpreting and applying the contents of this Tool or the ASCE 7 standard.

In using this Tool, you expressly assume all risks associated with your use. Under no circumstances shall ASCE or its officers, directors, employees, members, affiliates, or agents be liable to you or any other person for any direct, indirect, special, incidental, or consequential damages arising from or related to your use of, or reliance on, the Tool or any information obtained therein. To the fullest extent permitted by law, you agree to release and hold harmless ASCE from any and all liability of any nature arising out of or resulting from any use of data provided by the ASCE 7 Hazard Tool.

Docusign Envelope ID: 73F002A8-3BF6-43A3-8EB8-CECE7883948A

2208934038
Doc# 2208934038 Fee $88.00
KAREN A. YARBROUGH
COOK COUNTY CLERK
DATE: 03/30/2022 12:53 PM PG: 1 OF 7

Ordinance 2021-35

An Ordinance Renewing a Special Permit for Personal Wireless Services Antenna Located on a Tower-Style Structure in Excess of District Height Limitations (Crown Castle GT Company, LLC – 180 Anets Drive) (Docket No. BOT-21-10)

Passed by the Board of Trustees, 9/28/2021
Printed and Published, 9/29/2021

Printed and Published in Pamphlet Form
by Authority of the
President and Board of Trustees
VILLAGE OF NORTHBROOK
COOK COUNTY, ILLINOIS

I hereby certify that this document was properly published on the date stated above.

/s/ Debra J. Ford
Village Clerk

I hereby certify this to be a true and exact copy of the original.
3/10/22
Date
Village Clerk

VILLAGE OF NORTHBROOK CORPORATE SEAL COOK COUNTY, ILL.

Docusign Envelope ID: 73F002A8-3BF6-43A3-8EB8-CECE7883948A

Ordinance 2021-35

BE IT ORDAINED by the President and Board of Trustees of the Village of Northbrook, County of Cook and State of Illinois THAT:

An Ordinance Renewing a Special Permit for Personal Wireless Services Antenna Located on a Tower-Style Structure in Excess of District Height Limitations (Crown Castle GT Company, LLC – 180 Anets Drive) (Docket No. BOT-21-10)

shall be, and is hereby, adopted as follows:

Section 1. BACKGROUND.

On August 13, 2019, the Corporate Authorities adopted Ordinance No. 2019-51 granting Crown Castle GT Company, LLC ("***Applicant***") a special permit to allow the maintenance, continued operation, and expansion of personal wireless services facility on an antenna support structure in excess of district height limitations at 180 Anets Drive ("***Property***") which is owned by Northbrook Park District ("***Owner***") and is located in the I-B Institutional Building District.

The special permit granted by Ordinance No. 2019-51 includes a term expiring on October 9, 2021. The Applicant submitted an application requesting a renewal of the special permit granted in Ordinance No. 2019-51 pursuant to Subsection 11-602 K of the Northbrook Zoning Code (1988), as amended ("***Zoning Code***").

The Facility has operated since 2019 without incident and the President and the Board of Trustees have determined that the circumstances under which the original special permit was granted have not substantially changed. Therefore, the Corporate Authorities have determined that it is in the best interests of the Village and the public to renew the special permit originally granted by Ordinance No. 2019-51.

Section 2. DESCRIPTION OF PROPERTY

The Property is commonly known as 180 Anets Drive, and is legally described in **Exhibit** A attached to and, by this reference, made a part of this Ordinance. The Property is located in the IB Institutional Building District.

Docusign Envelope ID: 73F002A8-3BF6-43A3-8EB8-CECE7883948A

Section 3. PUBLIC HEARING AND PUBLIC MEETING.

A public hearing to consider the renewal of the special permit was duly advertised and was held at the Board of Trustees regular meeting on September 28, 2021.

Section 4. RENEWAL OF SPECIAL PERMIT.

Subject to and contingent upon the conditions, restrictions, and provisions set forth in Ordinance No. 2019-51, and pursuant to Subsection 11-602 K of the Zoning Code, special permit to allow Personal Wireless Services Antenna Located on a Tower-Style Structure in Excess of District Height Limitations (SIC Number 4810.02) on the Property ("***Special Permit***"), is hereby, renewed and granted to the Applicant.

Section 5. RESTATEMENT OF ORDINANCE NO. 2019-51 WITH MINOR AMENDMENTS.

All terms, provisions, conditions, and restrictions of Ordinance No. 2019-51 shall remain in full force and effect with the exception of:

A. Number of Antennas. The Antenna Facilities shall be allowed to add one additional platform on the existing tower structure consisting of no more than nine additional panel antennas.

B. Location of Antenna Facilities. The Antenna Facilities shall be mounted no more than 88 from grade on the existing tower structure.

Section 6. BINDING EFFECT; TRANSFERABILITY.

The privileges, obligations, and provisions of each and every Section of this Ordinance, are for the sole benefit of, and shall be binding on, the Applicant, except as otherwise expressly provided in this Ordinance. Nothing in this Ordinance shall be deemed to allow this Ordinance to be transferred to any person or entity unless and until (a) such person or entity ("***Transferee***") executes and files with the Village Clerk an unconditional agreement and consent to accept and abide by each and all of the terms, conditions, and limitations set forth in this Ordinance in a form acceptable to the Village Manager and (b) the Board of Trustees has approved such transfer by resolution duly adopted.

Section 7. TERM.

The special permit renewed and restated in Section 5 above shall automatically expire, and the designated use shall terminate, on January 31, 2023, unless prior to such date, the Applicant shall have requested, and the Village's corporate authorities, in their sole and absolute discretion, shall have granted a renewal in accordance with Subsection 11-602 K of the Code.

Docusign Envelope ID: 73F002A8-3BF6-43A3-8EB8-CECE7883948A

Section 8. EFFECTIVE DATE.

A. This Ordinance shall be effective only upon the occurrence of all of the following events:

i. Passage by the Board of Trustees of the Village of Northbrook by a majority vote in the manner required by law;

ii. Publication in pamphlet form in the manner required by law;

iii. The filing by Applicant and Owner with the Village Clerk, for recording in the Office of the Cook County Recorder of Deeds, of an unconditional agreement and consent to accept and abide by each and all of the terms, conditions, and limitations set forth in this Ordinance. Such unconditional agreement and consent shall be in the form attached to and, by this reference, made part of this Ordinance as ***Exhibit B***, and shall be executed by the Applicant.

B. In the event that the Applicant does not file with the Village Clerk a fully executed copy of the unconditional agreement and consent referenced in Paragraph 8.A.iii above within 60 days after the date of passage of this Ordinance by the Corporate Authorities, the Corporate Authorities shall have the right, in their sole discretion, to declare this Ordinance null and void and of no force or effect.

Adopted: 9/28/2021

RESULT:	**ADOPTED [6 TO 0]**
MOVER:	Bob Israel, Trustee
SECONDER:	Dan Pepoon, Trustee
AYES:	Israel, Collison, Ross, Hebl, Pepoon, Ebhomielen
ABSTAIN:	Kathryn Ciesla

ATTEST:

/s/ Debra J. Ford
Village Clerk

VILLAGE OF NORTHBROOK CORPORATE SEAL COOK COUNTY, ILL.

I hereby certify this to be a true and exact copy of the original.
2-21-22
Date
Village Clerk

/s/ Kathryn L Ciesla
Village President

Docusign Envelope ID: 73F002A8-3BF6-43A3-8EB8-CECE7883948A

EXHIBIT A

Legal Description

EXISTING LEASE AREA DESCRIPTION PER SURVEY PREPARED BY STONELAKE SURVEY COMPANY, LTD DATED 9/10/97
THAT PART OF THE NORTHWEST QUARTER OF SECTION 15, TOWNSHIP 42 NORTH, RANGE 12 EAST OF THE THIRD PRINCIPAL MERIDIAN, DESCRIBED AS FOLLOWS: COMMENCING AT A POINT ON THE NORTH LINE OF THE SOUTH 525.40 FEET OF LOT 19 IN ASSESSOR'S DIVISION OF SAID SECTION 15, AT THE EASTERLY RIGHT OF WAY LINE OF THE CHICAGO, MILWAUKEE, ST. PAUL AND PACIFIC RAILROAD; THENCE NORTH 90 DEGREES EAST ALONG SAID NORTH LINE, 25.54 FEET; THENCE NORTH 00 DEGREES 00 MINUTES EAST, 47.96 FEET TO THE POINT OF BEGINNING; THENCE NORTH 01 DEGREES 25 MINUTES 05 SECONDS WEST, 20.00 FEET; THENCE SOUTH 88 DEGREES 34 MINUTES 55 SECONDS WEST, 30.00 FEET; THENCE SOUTH 01 DEGREES 25 MINUTES 05 SECONDS EAST, 20.00 FEET; THENCE NORTH 88 DEGREES 34 MINUTES 55 SECONDS EAST, 30.00 FEET TO THE POINT OF BEGINNING , ALL IN COOK COUNTY, ILLINOIS AND CONTAINING 600 SQUARE FEET.

EXISTING 12' ACCESS EASEMENT DESCRIPTION PER SURVEY PREPARED BY STONELAKE SURVEY COMPANY, LTD DATED 9/10/97
THAT PART OF THE NORTHWEST QUARTER OF SECTION 15, TOWNSHIP 42 NORTH, RANGE 12 EAST OF THE THIRD PRINCIPAL MERIDIAN, DESCRIBED AS FOLLOWS: COMMENCING AT A POINT ON THE NORTH LINE OF THE SOUTH 525.40 FEET OF LOT 19 IN ASSESSOR'S DIVISION OF SAID SECTION 15, AT THE EASTERLY RIGHT OF WAY LINE OF THE CHICAGO, MILWAUKEE, ST. PAUL AND PACIFIC RAILROAD; THENCE NORTH 90 DEGREES EAST ALONG SAID NORTH LINE, 372.00 FEET TO THE POINT OF BEGINNING; THENCE NORTH 00 DEGREES 00 MINUTES WEST, 470.00 FEET TO A POINT OF CURVE; THENCE NORTHWESTERLY ALONG A CURVE CONVEX NORTHEASTERLY AND HAVING A RADIUS OF 114.00 FEET, A DISTANCE OF 179.07 FEET; THENCE NORTH 90 DEGREES WEST, 350.0 FEET TO A POINT OF CURVE; THENCE SOUTHWESTERLY ALONG A CURVE CONVEX NORTHWESTERLY AND HAVING A RADIUS OF 52.00 FEET, A DISTANCE OF 97.52 FEET; THENCE SOUTH 17 DEGREES 27 MINUTES EAST, 322.53 FEET; THENCE SOUTH 15 DEGREES 45 MINUTES 40 SECONDS EAST, 147.04 FEET; THENCE SOUTH 01 DEGREES 25 MINUTES 05 SECONDS EAST, 20.00 FEET; THENCE NORTH 90 DEGREES WEST, 7.32 FEET; THENCE NORTH 15 DEGREES 45 MINUTES 40 SECONDS WEST, 164.25 FEET; THENCE NORTH 17 DEGREES 27 MINUTES WEST, 322.37 FEET TO A POINT OF CURVE; THENCE NORTHEASTERLY ALONG A CURVE CONVEX NORTHWESTERLY AND HAVING A RADIUS OF 64.00 FEET, A DISTANCE OF 120.02 FEET; THENCE SOUTH 90 DEGREES EAST, 350.00 FEET TO A POINT OF CURVE; THENCE SOUTHEASTERLY ALONG A CURVE CONVEX NORTHEASTERLY AND HAVING A RADIUS OF 126.00 FEET, A DISTANCE OF 197.92 FEET; THENCE SOUTH 00 DEGREES 00 MINUTES EAST, 470.00 FEET; THENCE SOUTH 90 DEGREES WEST, 12.00 FEET TO THE POINT OF BEGINNING, ALL IN COOK COUNTY, ILLINOIS AND CONTAINING 19,140 SQUARE FEET.

EXISTING 8' UTILITY EASEMENT DESCRIPTION PER SURVEY PREPARED BY STONELAKE SURVEY COMPANY, LTD DATED 9/10/97
THAT PART OF THE NORTHWEST QUARTER OF SECTION 15, TOWNSHIP 42 NORTH, RANGE 12 EAST OF THE THIRD PRINCIPAL MERIDIAN, DESCRIBED AS FOLLOWS: COMMENCING AT A POINT ON THE NORTH LINE OF THE SOUTH 525.40 FEET OF LOT 19 IN ASSESSOR'S DIVISION OF SAID SECTION 15, AT THE EASTERLY RIGHT OF WAY LINE OF THE CHICAGO, MILWAUKEE, ST. PAUL AND PACIFIC RAILROAD; THENCE NORTH 90 DEGREES EAST ALONG SAID NORTH LINE, 51.00 FEET; THENCE NORTH 00 DEGREES 00 MINUTES EAST, 4.00 FEET TO THE POINT OF BEGINNING, BEING THE CENTERLINE OF A 8.00 FOOT EASEMENT, 4.00 FEET EITHER SIDE OF THE FOLLOWING DESCRIBED LINE; THENCE SOUTH 90 DEGREES WEST, 22.00 FEET; THENCE NORTH 00 DEGREES 00 MINUTES EAST, 54.00 FEET; THENCE SOUTH 90 DEGREES WEST, 13.71 FEET TO THE END OF EASEMENT, ALL IN COOK COUNTY, ILLINOIS AND CONTAINING 716 SQUARE FEET.

PIN: 04-15-101-029

Docusign Envelope ID: 73F002A8-3BF6-43A3-8EB8-CECE7883948A

EXHIBIT B

Applicant's Unconditional Agreement and Consent

TO: The Village of Northbrook, Illinois ("Village"):

WHEREAS, The Northbrook Park District ("Owner") is owner of a property commonly known as 180 Anets Drive in the Village of Northbrook ("Property"); and

WHEREAS, the Crown Castle GT Company, LLC ("Applicant") has applied for a special permit renewal for personal wireless telecommunications antennas on the Property; and

WHEREAS, Ordinance No. 21 -035, adopted by the President and Board of Trustees of the Village of Northbrook on September 28, 2021 ("Ordinance"), grants approval of such special permit renewal, subject to certain conditions, for the benefit of Applicant; and

WHEREAS, Applicant desires to evidence to the Village its unconditional agreement and consent to accept and abide by each of the terms, conditions, and limitations set forth in said Ordinance and the Owner desires to evidence its consent to recording the Ordinance against the Property;

NOW, THEREFORE, Applicant and Owner do hereby agree and covenant as follows:

1. Applicant shall, and does hereby, unconditionally agree to, accept, consent to and abide by all of the terms, conditions, restrictions, and provisions of that certain Ordinance No. 21-035, adopted by the Village Board of Trustees on September 28, 2021.

2. Applicant acknowledges and agrees that the Village is not and shall not be, in any way, liable for any damages or injuries that may be sustained as a result of the Village's review and approval of any plans for the Property, or the issuance of any permits for the use and development of the Property, and that the Village's review and approval of any such plans and issuance of any such permits does not, and shall not, in any way, be deemed to insure Applicant against damage or injury of any kind and at any time.

3. Applicant acknowledges that the public notices and hearings have been properly given and held with respect to the adoption of the Ordinance, has considered the possibility of the revocation provided for in the Ordinance, and agrees not to challenge any such revocation on the grounds of any procedural infirmity or any denial of any procedural right.

4. Applicant agrees to and does hereby hold harmless and indemnify the Village, the Village's corporate authorities, and all Village elected and appointed officials, officers, employees, agents, representatives, and attorneys, from any and all claims that may, at any time, be asserted against any of such parties in connection with (a) the Village's review and approval of any plans and issuance of any permits, (b) the procedures followed in connection with the adoption of the Ordinance, (c) the development, construction, maintenance, and use of the Property, and (d) the performance by Applicant of its obligations under this Unconditional Consent and Agreement.

Docusign Envelope ID: 73F002A8-3BF6-43A3-8EB8-CECE7883948A

5. Applicant shall, and does hereby agree to, pay all expenses incurred by the Village in defending itself with regard to any and all of the claims mentioned in this Unconditional Consent and Agreement. These expenses shall include all out-of-pocket expenses, such as attorneys' and experts' fees, and shall also include the reasonable value of any services rendered by any employees of the Village.

6. Owner warrants and represents to the Village that he owns fee simple title to the Property and consents to the recording of the Ordinance against the Property.

WITNESS:

By: _____
Signature

By: Scott Zivick
Print Name

Its: _____

CROWN CASTLE GT COMPANY, LLC, an Illinois limited liability company

By: Tyler Richards
Signature

By: Tyler Richards
Print Name

Its: Site Acquisition Specialist

SUBSCRIBED and SWORN to before me this 10th day of Feb., 2021.

_____
Notary Public

VERONICA N LAWRENCE
Notary ID #131103553
My Commission Expires
April 26, 2025

Docusign Envelope ID: 73F002A8-3BF6-43A3-8EB8-CECE7883948A

Ordinance 2021-35

An Ordinance Renewing a Special Permit for Personal Wireless Services Antenna Located on a Tower-Style Structure in Excess of District Height Limitations (Crown Castle GT Company, LLC – 180 Anets Drive) (Docket No. BOT-21-10)

Passed by the Board of Trustees, 9/28/2021
Printed and Published, 9/29/2021

Printed and Published in Pamphlet Form
by Authority of the
President and Board of Trustees
VILLAGE OF NORTHBROOK
COOK COUNTY, ILLINOIS

I hereby certify that this document was properly published on the date stated above.

/s/ Debra J. Ford
Village Clerk

I hereby certify this to be a true and exact copy of the original.
3/10/22
Date
Village Clerk

VILLAGE OF NORTHBROOK CORPORATE SEAL COOK COUNTY, ILL.



[redacted]

[redacted]

July 18, 2025

Village of Northbrook
Michaela Kohlstedt, Deputy Director
Development & Planning Services
1225 Cedar Lane
Northbrook, IL 60062

Business Unit: 875515
Site Name: 180 ANETS

Narrative:

The property is commonly known as 180 NORTH ANETS DR., NORTHBROOK, IL 60062, and is further described as Tax ID Parcel # 04-15-101-029. Attached is **Exhibit A**, Legal Description. The Subject Property is zoned in the 18 Institutional Building District and is owned by the Northbrook Park District ("Owner"). Pursuant to Section 9-201M of the Village of Northbrook Zoning Code, "Where the provider of personal wireless services is not the owner of the land on which such antenna or structure is located, the term of the special permit is limited to the term of the lease...". The next expiration of our lease with the Owner is January 12, 2048. Therefore, Crown Castle GT Company, LLC, requests renewal of the Special Permit Ordinance 2021-35 until the lease expires or is terminated.

An approved building permit authorizes T-Mobile to upgrade its current equipment. Upon special permit renewal approval, T-Mobile will proceed with the installation in accordance with the submitted drawings and structural analysis. This site operates continuously and delivers a vital service to the community, supporting residents, businesses, first responders, and an interconnected network of nearby cell sites. Additionally, it ensures reliable coverage for 911 calls from wireless devices in the vicinity of Techny Prairie Park and Fields.

The cell tower conforms well with the criteria set by the Board of Trustees. The neighborhood is mainly commercial and industrial, making the tower a compatible addition that will not disrupt the landscape. The property suits the requested special permit, as it is in an area that benefits from improved telecommunications infrastructure. The tower's design and placement minimize visual impact on the property and neighboring areas. The tower aligns with adjacent uses and zoning, fitting within the surrounding commercial and industrial zones. It will not harm or negatively affect neighboring properties. The impact on traffic and parking will be minimal since the tower is not expected to generate significant demand.

The community needs enhanced wireless connectivity infrastructure, and the tower's economic benefits are expected to be positive. The advantages for public health, safety, and welfare, including better communication, outweigh any hardships the landowner might face if the application is denied. The proposal complies with the Uniform Development Ordinance and falls within permissible uses.

EXHIBIT A

Legal Description

EXISTING LEASE AREA DESCRIPTION PER SURVEY PREPARED BY STONELAKE SURVEY COMPANY, LTD DATED 9/10/97
THAT PART OF THE NORTHWEST QUARTER OF SECTION 15, TOWNSHIP 42 NORTH, RANGE 12 EAST OF THE THIRD PRINCIPAL MERIDIAN, DESCRIBED AS FOLLOWS: COMMENCING AT A POINT ON THE NORTH LINE OF THE SOUTH 525.40 FEET OF LOT 19 IN ASSESSOR'S DIVISION OF SAID SECTION 15, AT THE EASTERLY RIGHT OF WAY LINE OF THE CHICAGO, MILWAUKEE, ST. PAUL AND PACIFIC RAILROAD; THENCE NORTH 90 DEGREES EAST ALONG SAID NORTH LINE, 25.54 FEET; THENCE NORTH 00 DEGREES 00 MINUTES EAST, 47.96 FEET TO THE POINT OF BEGINNING; THENCE NORTH 01 DEGREES 25 MINUTES 05 SECONDS WEST, 20.00 FEET; THENCE SOUTH 88 DEGREES 34 MINUTES 55 SECONDS WEST, 30.00 FEET; THENCE SOUTH 01 DEGREES 25 MINUTES 05 SECONDS EAST, 20.00 FEET; THENCE NORTH 88 DEGREES 34 MINUTES 55 SECONDS EAST, 30.00 FEET TO THE POINT OF BEGINNING , ALL IN COOK COUNTY, ILLINOIS AND CONTAINING 600 SQUARE FEET.

EXISTING 12' ACCESS EASEMENT DESCRIPTION PER SURVEY PREPARED BY STONELAKE SURVEY COMPANY, LTD DATED 9/10/97
THAT PART OF THE NORTHWEST QUARTER OF SECTION 15, TOWNSHIP 42 NORTH, RANGE 12 EAST OF THE THIRD PRINCIPAL MERIDIAN, DESCRIBED AS FOLLOWS: COMMENCING AT A POINT ON THE NORTH LINE OF THE SOUTH 525.40 FEET OF LOT 19 IN ASSESSOR'S DIVISION OF SAID SECTION 15, AT THE EASTERLY RIGHT OF WAY LINE OF THE CHICAGO, MILWAUKEE, ST. PAUL AND PACIFIC RAILROAD; THENCE NORTH 90 DEGREES EAST ALONG SAID NORTH LINE, 372.00 FEET TO THE POINT OF BEGINNING; THENCE NORTH 00 DEGREES 00 MINUTES WEST, 470.00 FEET TO A POINT OF CURVE; THENCE NORTHWESTERLY ALONG A CURVE CONVEX NORTHEASTERLY AND HAVING A RADIUS OF 114.00 FEET, A DISTANCE OF 179.07 FEET; THENCE NORTH 90 DEGREES WEST, 350.0 FEET TO A POINT OF CURVE; THENCE SOUTHWESTERLY ALONG A CURVE CONVEX NORTHWESTERLY AND HAVING A RADIUS OF 52.00 FEET, A DISTANCE OF 97.52 FEET; THENCE SOUTH 17 DEGREES 27 MINUTES EAST, 322.53 FEET; THENCE SOUTH 15 DEGREES 45 MINUTES 40 SECONDS EAST, 147.04 FEET; THENCE SOUTH 01 DEGREES 25 MINUTES 05 SECONDS EAST, 20.00 FEET; THENCE NORTH 90 DEGREES WEST, 7.32 FEET; THENCE NORTH 15 DEGREES 45 MINUTES 40 SECONDS WEST, 154.25 FEET; THENCE NORTH 17 DEGREES 27 MINUTES WEST, 322.37 FEET TO A POINT OF CURVE; THENCE NORTHEASTERLY ALONG A CURVE CONVEX NORTHWESTERLY AND HAVING A RADIUS OF 64.00 FEET, A DISTANCE OF 120.02 FEET; THENCE SOUTH 90 DEGREES EAST, 350.00 FEET TO A POINT OF CURVE; THENCE SOUTHEASTERLY ALONG A CURVE CONVEX NORTHEASTERLY AND HAVING A RADIUS OF 126.00 FEET, A DISTANCE OF 197.92 FEET; THENCE SOUTH 00 DEGREES 00 MINUTES EAST, 470.00 FEET; THENCE SOUTH 90 DEGREES WEST, 12.00 FEET TO THE POINT OF BEGINNING, ALL IN COOK COUNTY, ILLINOIS AND CONTAINING 19,140 SQUARE FEET.

EXISTING 8' UTILITY EASEMENT DESCRIPTION PER SURVEY PREPARED BY STONELAKE SURVEY COMPANY, LTD DATED 9/10/97
THAT PART OF THE NORTHWEST QUARTER OF SECTION 15, TOWNSHIP 42 NORTH, RANGE 12 EAST OF THE THIRD PRINCIPAL MERIDIAN, DESCRIBED AS FOLLOWS: COMMENCING AT A POINT ON THE NORTH LINE OF THE SOUTH 525.40 FEET OF LOT 19 IN ASSESSOR'S DIVISION OF SAID SECTION 15, AT THE EASTERLY RIGHT OF WAY LINE OF THE CHICAGO, MILWAUKEE, ST. PAUL AND PACIFIC RAILROAD; THENCE NORTH 90 DEGREES EAST ALONG SAID NORTH LINE, 61.00 FEET; THENCE NORTH 00 DEGREES 00 MINUTES EAST, 4.00 FEET TO THE POINT OF BEGINNING, BEING THE CENTERLINE OF A 8.00 FOOT EASEMENT, 4.00 FEET EITHER SIDE OF THE FOLLOWING DESCRIBED LINE; THENCE SOUTH 90 DEGREES WEST, 22.00 FEET; THENCE NORTH 00 DEGREES 00 MINUTES EAST, 54.00 FEET; THENCE SOUTH 90 DEGREES WEST, 13.71 FEET TO THE END OF EASEMENT, ALL IN COOK COUNTY, ILLINOIS AND CONTAINING 716 SQUARE FEET.

PIN: 04-15-101-029

DigiSigner Document ID: d0dff10a-7aee-48fd-85bf-5ed24f60df6e

T-Mobile

T-MOBILE SITE NUMBER: CH80545A
T-MOBILE SITE NAME: CH80545A
T-MOBILE PROJECT: SPRINT KEEP

BUSINESS UNIT #: 875515
SITE ADDRESS: 180 NORTH ANETS DRIVE NORTHBROOK, IL 60062
COUNTY: COOK
SITE TYPE: MONOPOLE
TOWER HEIGHT: 100'-0"

SITE INFORMATION

CROWN CASTLE USA INC.	
SITE NAME:	180 ANETS
BU NUMBER:	875515
TOWER OWNER:	CROWN CASTLE 2000 CORPORATE DRIVE CANONSBURG, PA 15317
CARRIER/APPLICANT:	T-MOBILE 8550 W. BRYN MAWR AVE, SUITE 100 CHICAGO, IL 60631
SITE ADDRESS:	180 NORTH ANETS DRIVE NORTHBROOK, IL 60062
COUNTY:	COOK
LATITUDE:	42° 7' 5.01"
LONGITUDE:	-87° 49' 25.77"
LAT/LONG TYPE:	NAD83
GROUND ELEVATION:	646'-0"
AREA OF CONSTRUCTION:	EXISTING
CURRENT ZONING:	IB
MAP/PARCEL #:	04-15-101-029-0000
OCCUPANCY CLASSIFICATION:	U
TYPE OF CONSTRUCTION:	IIB
A.D.A. COMPLIANCE:	FACILITY IS UNMANNED AND NOT FOR HUMAN HABITATION
PROPERTY OWNER:	NORTHBROOK PARK DISTRICT 545 ACADEMY DRIVE NORTHBROOK, IL 60062
JURISDICTION:	VILLAGE OF NORTHBROOK
ELECTRIC PROVIDER:	COM ED (800) 334-7661
TELCO PROVIDER:	AMERITECH (800) 898-0123

PROJECT TEAM

A&E FIRM:	POWER OF DESIGN 11490 BLUEGRASS PARKWAY LOUISVILLE, KY 40299 (502) 437-5252
CROWN CASTLE USA INC. DISTRICT CONTACTS:	3025 HIGHLAND PKWY, SUITE 510, DOWNERS GROVE, IL, 60515 PAUL SLIFER - PROJECT MANAGER PAUL.SLIFER@CROWNCASTLE.COM PATRICK GABREL - CONSTRUCTION MANAGER PATRICK.GABREL@CROWNCASTLE.COM ZACHARY KELLY - A&E SPECIALIST ZACHARY.KELLY@CROWNCASTLE.COM (724) 416-9958

DRAWING INDEX

SHEET #	SHEET DESCRIPTION
T-1	TITLE SHEET
T-2	GENERAL NOTES
C-1.1	SITE PLAN
C-1.2	EXISTING & FINAL EQUIPMENT PLANS
C-2	FINAL ELEVATION & ANTENNA PLANS
C-3	EQUIPMENT DETAILS & COAX COLOR CODING
C-4	EQUIPMENT SPECIFICATIONS
C-5	EQUIPMENT SPECIFICATIONS
C-6	DELTA HPL3 - LB3 CONDUIT ROUTING CONF.
C-7	DELTA HPL3 SITE SUPPORT CABINET
C-8	DELTA LB3 BATTERY CABINET
C-9	ICE BRIDGE DETAIL
E-1	PANEL SCHEDULES & ONE-LINE DIAGRAM
E-2	ELECTRICAL DETAILS
G-1	TYPICAL FINAL GROUNDING SCHEMATIC
G-2	GROUNDING DETAILS
ATTACHED	MOUNT SPECIFICATIONS

ALL DRAWINGS CONTAINED HEREIN ARE FORMATTED FOR 11X17. CONTRACTOR SHALL VERIFY ALL PLANS AND EXISTING DIMENSIONS AND CONDITIONS ON THE JOB SITE AND SHALL IMMEDIATELY NOTIFY THE ENGINEER IN WRITING OF ANY DISCREPANCIES BEFORE PROCEEDING WITH THE WORK OR BE RESPONSIBLE FOR SAME.

CALL ILLINOIS ONE CALL
(800) 892-0123
CALL 3 WORKING DAYS BEFORE YOU DIG!

LOCATION MAP



NO SCALE

PROJECT DESCRIPTION

THE PURPOSE OF THIS PROJECT IS TO ENHANCE BROADBAND CONNECTIVITY AND CAPACITY TO THE EXISTING ELIGIBLE WIRELESS FACILITY.

TOWER SCOPE OF WORK:
- REMOVE (6) ANTENNAS
- REMOVE (6) RRHs
- REMOVE (3) FILTERS
- REMOVE (4) HYBRID CABLES
- REMOVE (1) PLATFORM MOUNT
- INSTALL (6) ANTENNAS
- INSTALL (6) RRHs
- INSTALL (2) HCS 2.0 BREAKOUT PENDANT
- INSTALL (2) HCS 2.0 HYBRID CABLE (1-1/2")
- INSTALL (1) PLATFORM MOUNT (PV-LPPGS-12M-HR2-AP2-NS)

GROUND SCOPE OF WORK:
- REMOVE (1) EQUIPMENT CABINET
- REMOVE (1) 200A PPC (12 SPACES)
- INSTALL (1) DELTA - HPL3 SITE SUPPORT CABINET
- INSTALL (1) DELTA - LB3 BATTERY CABINET
- INSTALL (1) ASIA, (2) ASIL, (3) ABIA, (3) ABIL, (1) ABIO,
- INSTALL (2) AMIA
- INSTALL (1) 200A PPC (24 SPACES)
- INSTALL (2) HCS 2.0 JUNCTION BOX
- INSTALL (1) VOLTAGE BOOSTER W/EXTRA BOOSTER
- INSTALL (1) CSR IXRe V2 (GEN2) ROUTER
- INSTALL (2) 2" CONDUITS FROM NEW PPC TO NEW SSC CABINET
- INSTALL 200A BREAKER (2 POLE, 4 SPACE) IN NEW PPC
- INSTALL (2) ICE BRIDGES (±8'-0")

APPLICABLE CODES/REFERENCE DOCUMENTS

ALL WORK SHALL BE PERFORMED AND MATERIALS INSTALLED IN ACCORDANCE WITH THE CURRENT EDITIONS OF THE FOLLOWING CODES AS ADOPTED BY THE LOCAL GOVERNING AUTHORITIES. NOTHING IN THESE PLANS IS TO BE CONSTRUED TO PERMIT WORK NOT CONFORMING TO THESE CODES:

CODE TYPE	CODE
BUILDING	2018 IBC
MECHANICAL	2018 IMC
ELECTRICAL	2017 NEC

REFERENCE DOCUMENTS:

STRUCTURAL ANALYSIS:	MORRISON HERSHFIELD
DATED:	JUNE 15, 2023
MOUNT ANALYSIS:	BY OTHERS
DATED:	
RFDS REVISION:	1
DATED:	03/27/2023
ORDER ID:	652107
REVISION:	0

INSTALLER NOTE:
NO PROPOSED LOADING TO BE ADDED UNTIL MOUNT SWAP IS COMPLETE. CONTRACTOR TO INSTALL MOUNT PER MANUFACTURER'S SPECIFICATIONS.

NOTE:
PRIOR TO ACCESSING/ENTERING THE SITE YOU MUST CONTACT THE CROWN NOC AT (800) 788-7011 & CROWN CONSTRUCTION MANAGER.

RECEIVED
MAY 18 2023
BY:

T-Mobile
8550 W. BRYN MAWR AVE, SUITE 100
CHICAGO, IL 60631

CROWN CASTLE
3025 HIGHLAND PKWY, SUITE 510,
DOWNERS GROVE, IL, 60515

POD
POWER OF DESIGN
11490 BLUEGRASS PKWY
LOUISVILLE, KY 40299
502-437-5252

T-MOBILE SITE NUMBER:
CH80545A

BU #: **875515**
180 ANETS

180 NORTH ANETS DRIVE
NORTHBROOK, IL 60062

EXISTING 100'-0" MONOPOLE

ISSUED FOR:

REV	DATE	DRWN	DESCRIPTION	DES./QA
0	6/21/2023	AS	CONSTRUCTION	MEP

MARK A. PATTERSON
062-067337
LICENSED PROFESSIONAL ENGINEER
STATE OF ILLINOIS
06/21/2023
EXPIRES: 11/30/2023

IT IS A VIOLATION OF LAW FOR ANY PERSON, UNLESS THEY ARE ACTING UNDER THE DIRECTION OF A LICENSED PROFESSIONAL ENGINEER, TO ALTER THIS DOCUMENT.

SHEET NUMBER: T-1
REVISION: 0

DigiSigner Document ID: d0df40e-7aee-48fd-85bf-5ed24f60df6a

CROWN CASTLE USA INC. SITE ACTIVITY REQUIREMENTS:

1. NOTICE TO PROCEED– NO WORK SHALL COMMENCE PRIOR TO CROWN CASTLE USA INC. WRITTEN NOTICE TO PROCEED (NTP) AND THE ISSUANCE OF A PURCHASE ORDER. PRIOR TO ACCESSING/ENTERING THE SITE YOU MUST CONTACT THE CROWN CASTLE USA INC. NOC AT 800-788-7011 & THE CROWN CASTLE USA INC. CONSTRUCTION MANAGER.
2. "LOOK UP" – CROWN CASTLE USA INC. SAFETY CLIMB REQUIREMENT:
   THE INTEGRITY OF THE SAFETY CLIMB AND ALL COMPONENTS OF THE CLIMBING FACILITY SHALL BE CONSIDERED DURING ALL STAGES OF DESIGN, INSTALLATION, AND INSPECTION. TOWER MODIFICATION, MOUNT REINFORCEMENTS, AND/OR EQUIPMENT INSTALLATIONS SHALL NOT COMPROMISE THE INTEGRITY OR FUNCTIONAL USE OF THE SAFETY CLIMB OR ANY COMPONENTS OF THE CLIMBING FACILITY ON THE STRUCTURE. THIS SHALL INCLUDE, BUT NOT BE LIMITED TO: PINCHING OF THE WIRE ROPE, BENDING OF THE WIRE ROPE FROM ITS SUPPORTS, DIRECT CONTACT OR CLOSE PROXIMITY TO THE WIRE ROPE WHICH MAY CAUSE FRICTIONAL WEAR, IMPACT TO THE ANCHORAGE POINTS IN ANY WAY, OR TO IMPEDE/BLOCK ITS INTENDED USE. ANY COMPROMISED SAFETY CLIMB, INCLUDING EXISTING CONDITIONS MUST BE TAGGED OUT AND REPORTED TO YOUR CROWN CASTLE USA INC. POC OR CALL THE NOC TO GENERATE A SAFETY CLIMB MAINTENANCE AND CONTRACTOR NOTICE TICKET.
3. PRIOR TO THE START OF CONSTRUCTION, ALL REQUIRED JURISDICTIONAL PERMITS SHALL BE OBTAINED. THIS INCLUDES, BUT IS NOT LIMITED TO, BUILDING, ELECTRICAL, MECHANICAL, FIRE, FLOOD ZONE, ENVIRONMENTAL, AND ZONING. AFTER ONSITE ACTIVITIES AND CONSTRUCTION ARE COMPLETED, ALL REQUIRED PERMITS SHALL BE SATISFIED AND CLOSED OUT ACCORDING TO LOCAL JURISDICTIONAL REQUIREMENTS.
4. ALL CONSTRUCTION MEANS AND METHODS; INCLUDING BUT NOT LIMITED TO, ERECTION PLANS, RIGGING PLANS, CLIMBING PLANS, AND RESCUE PLANS SHALL BE THE RESPONSIBILITY OF THE GENERAL CONTRACTOR RESPONSIBLE FOR THE EXECUTION OF THE WORK CONTAINED HEREIN, AND SHALL MEET ANSI/ASSE A10.48 (LATEST EDITION); FEDERAL, STATE, AND LOCAL REGULATIONS; AND ANY APPLICABLE INDUSTRY CONSENSUS STANDARDS RELATED TO THE CONSTRUCTION ACTIVITIES BEING PERFORMED. ALL RIGGING PLANS SHALL ADHERE TO ANSI/ASSE A10.48 (LATEST EDITION) AND CROWN CASTLE USA INC. STANDARD CCD-STD-10253, INCLUDING THE REQUIRED INVOLVEMENT OF A QUALIFIED ENGINEER FOR CLASS IV CONSTRUCTION, TO CERTIFY THE SUPPORTING STRUCTURE(S) IN ACCORDANCE WITH ANSI/TIA-322 (LATEST EDITION).
5. ALL SITE WORK TO COMPLY WITH CAS-STD-10068 "INSTALLATION STANDARDS FOR CONSTRUCTION ACTIVITIES ON CROWN CASTLE USA INC. TOWER SITE," CED-STD-10294 "STANDARD FOR INSTALLATION OF MOUNTS AND APPURTENANCES," AND LATEST VERSION OF ANSI/TIA-1019-A-2012 "STANDARD FOR INSTALLATION, ALTERATION, AND MAINTENANCE OF ANTENNA SUPPORTING STRUCTURES AND ANTENNAS."
6. IF THE SPECIFIED EQUIPMENT CAN NOT BE INSTALLED AS SHOWN ON THESE DRAWINGS, THE CONTRACTOR SHALL PROPOSE AN ALTERNATIVE INSTALLATION FOR APPROVAL BY CROWN CASTLE USA INC. PRIOR TO PROCEEDING WITH ANY SUCH CHANGE OF INSTALLATION.
7. ALL MATERIALS FURNISHED AND INSTALLED SHALL BE IN STRICT ACCORDANCE WITH ALL APPLICABLE CODES, REGULATIONS AND ORDINANCES. CONTRACTOR SHALL ISSUE ALL APPROPRIATE NOTICES AND COMPLY WITH ALL LAWS, ORDINANCES, RULES, REGULATIONS AND LAWFUL ORDERS OF ANY PUBLIC AUTHORITY REGARDING THE PERFORMANCE OF THE WORK. ALL WORK CARRIED OUT SHALL COMPLY WITH ALL APPLICABLE MUNICIPAL AND UTILITY COMPANY SPECIFICATIONS AND LOCAL JURISDICTIONAL CODES, ORDINANCES AND APPLICABLE REGULATIONS.
8. THE CONTRACTOR SHALL INSTALL ALL EQUIPMENT AND MATERIALS IN ACCORDANCE WITH MANUFACTURER'S RECOMMENDATIONS UNLESS SPECIFICALLY STATED OTHERWISE.
9. THE CONTRACTOR SHALL CONTACT UTILITY LOCATING SERVICES PRIOR TO THE START OF CONSTRUCTION.
10. ALL EXISTING ACTIVE SEWER, WATER, GAS, ELECTRIC AND OTHER UTILITIES WHERE ENCOUNTERED IN THE WORK, SHALL BE PROTECTED AT ALL TIMES AND WHERE REQUIRED FOR THE PROPER EXECUTION OF THE WORK, SHALL BE RELOCATED AS DIRECTED BY CONTRACTOR. EXTREME CAUTION SHOULD BE USED BY THE CONTRACTOR WHEN EXCAVATING OR DRILLING PIERS AROUND OR NEAR UTILITIES. CONTRACTOR SHALL PROVIDE SAFETY TRAINING FOR THE WORKING CREW. THIS WILL INCLUDE BUT NOT BE LIMITED TO A) FALL PROTECTION B) CONFINED SPACE C) ELECTRICAL SAFETY D) TRENCHING AND EXCAVATION E) CONSTRUCTION SAFETY PROCEDURES.
11. ALL SITE WORK SHALL BE AS INDICATED ON THE STAMPED CONSTRUCTION DRAWINGS AND PROJECT SPECIFICATIONS, LATEST APPROVED REVISION.
12. CONTRACTOR SHALL KEEP THE SITE FREE FROM ACCUMULATING WASTE MATERIAL, DEBRIS, AND TRASH AT THE COMPLETION OF THE WORK. IF NECESSARY, RUBBISH, STUMPS, DEBRIS, STICKS, STONES AND OTHER REFUSE SHALL BE REMOVED FROM THE SITE AND DISPOSED OF LEGALLY.
13. ALL EXISTING INACTIVE SEWER, WATER, GAS, ELECTRIC AND OTHER UTILITIES, WHICH INTERFERE WITH THE EXECUTION OF THE WORK, SHALL BE REMOVED AND/OR CAPPED, PLUGGED OR OTHERWISE DISCONTINUED AT POINTS WHICH WILL NOT INTERFERE WITH THE EXECUTION OF THE WORK, SUBJECT TO THE APPROVAL OF CONTRACTOR, TOWER OWNER, CROWN CASTLE USA INC., AND/OR LOCAL UTILITIES.
14. THE CONTRACTOR SHALL PROVIDE SITE SIGNAGE IN ACCORDANCE WITH THE TECHNICAL SPECIFICATION FOR SITE SIGNAGE REQUIRED BY LOCAL JURISDICTION AND SIGNAGE REQUIRED ON INDIVIDUAL PIECES OF EQUIPMENT, ROOMS, AND SHELTERS.
15. THE SITE SHALL BE GRADED TO CAUSE SURFACE WATER TO FLOW AWAY FROM THE CARRIER'S EQUIPMENT AND TOWER AREAS.
16. THE SUB GRADE SHALL BE COMPACTED AND BROUGHT TO A SMOOTH UNIFORM GRADE PRIOR TO FINISHED SURFACE APPLICATION.
17. THE AREAS OF THE OWNERS PROPERTY DISTURBED BY THE WORK AND NOT COVERED BY THE TOWER, EQUIPMENT OR DRIVEWAY, SHALL BE GRADED TO A UNIFORM SLOPE, AND STABILIZED TO PREVENT EROSION AS SPECIFIED ON THE CONSTRUCTION DRAWINGS AND/OR PROJECT SPECIFICATIONS.
18. CONTRACTOR SHALL MINIMIZE DISTURBANCE TO EXISTING SITE DURING CONSTRUCTION. EROSION CONTROL MEASURES, IF REQUIRED DURING CONSTRUCTION, SHALL BE IN CONFORMANCE WITH THE LOCAL GUIDELINES FOR EROSION AND SEDIMENT CONTROL.
19. THE CONTRACTOR SHALL PROTECT EXISTING IMPROVEMENTS, PAVEMENTS, CURBS, LANDSCAPING AND STRUCTURES. ANY DAMAGED PART SHALL BE REPAIRED AT CONTRACTOR'S EXPENSE TO THE SATISFACTION OF OWNER.
20. CONTRACTOR SHALL LEGALLY AND PROPERLY DISPOSE OF ALL SCRAP MATERIALS SUCH AS COAXIAL CABLES AND OTHER ITEMS REMOVED FROM THE EXISTING FACILITY. ANTENNAS REMOVED SHALL BE RETURNED TO THE OWNER'S DESIGNATED LOCATION.
21. CONTRACTOR SHALL LEAVE PREMISES IN CLEAN CONDITION. TRASH AND DEBRIS SHOULD BE REMOVED FROM SITE ON A DAILY BASIS.
22. NO FILL OR EMBANKMENT MATERIAL SHALL BE PLACED ON FROZEN GROUND. FROZEN MATERIALS, SNOW OR ICE SHALL NOT BE PLACED IN ANY FILL OR EMBANKMENT.

GENERAL NOTES:

1. FOR THE PURPOSE OF CONSTRUCTION DRAWING, THE FOLLOWING DEFINITIONS SHALL APPLY:
   CONTRACTOR: GENERAL CONTRACTOR RESPONSIBLE FOR CONSTRUCTION
   CARRIER: T-MOBILE
   TOWER OWNER: CROWN CASTLE USA INC.
2. THESE DRAWINGS HAVE BEEN PREPARED USING STANDARDS OF PROFESSIONAL CARE AND COMPLETENESS NORMALLY EXERCISED UNDER SIMILAR CIRCUMSTANCES BY REPUTABLE ENGINEERS IN THIS OR SIMILAR LOCALITIES. IT IS ASSUMED THAT THE WORK DEPICTED WILL BE PERFORMED BY AN EXPERIENCED CONTRACTOR AND/OR WORKPEOPLE WHO HAVE A WORKING KNOWLEDGE OF THE APPLICABLE CODE STANDARDS AND REQUIREMENTS AND OF INDUSTRY ACCEPTED STANDARD GOOD PRACTICE. AS NOT EVERY CONDITION OR ELEMENT IS (OR CAN BE) EXPLICITLY SHOWN ON THESE DRAWINGS, THE CONTRACTOR SHALL USE INDUSTRY ACCEPTED STANDARD GOOD PRACTICE FOR MISCELLANEOUS WORK NOT EXPLICITLY SHOWN.
3. THESE DRAWINGS REPRESENT THE FINISHED STRUCTURE. THEY DO NOT INDICATE THE MEANS OR METHODS OF CONSTRUCTION. THE CONTRACTOR SHALL BE SOLELY RESPONSIBLE FOR THE CONSTRUCTION MEANS, METHODS, TECHNIQUES, SEQUENCES, AND PROCEDURES. THE CONTRACTOR SHALL PROVIDE ALL MEASURES NECESSARY FOR PROTECTION OF LIFE AND PROPERTY DURING CONSTRUCTION. SUCH MEASURES SHALL INCLUDE, BUT NOT BE LIMITED TO, BRACING, FORMWORK, SHORING, ETC. SITE VISITS BY THE ENGINEER OR HIS REPRESENTATIVE WILL NOT INCLUDE INSPECTION OF THESE ITEMS AND IS FOR STRUCTURAL OBSERVATION OF THE FINISHED STRUCTURE ONLY.
4. NOTES AND DETAILS IN THE CONSTRUCTION DRAWINGS SHALL TAKE PRECEDENCE OVER GENERAL NOTES AND TYPICAL DETAILS. WHERE NO DETAILS ARE SHOWN, CONSTRUCTION SHALL CONFORM TO SIMILAR WORK ON THE PROJECT, AND/OR AS PROVIDED FOR IN THE CONTRACT DOCUMENTS. WHERE DISCREPANCIES OCCUR BETWEEN PLANS, DETAILS, GENERAL NOTES, AND SPECIFICATIONS, THE GREATER, MORE STRICT REQUIREMENTS, SHALL GOVERN. IF FURTHER CLARIFICATION IS REQUIRED CONTACT THE ENGINEER OF RECORD.
5. SUBSTANTIAL EFFORT HAS BEEN MADE TO PROVIDE ACCURATE DIMENSIONS AND MEASUREMENTS ON THE DRAWINGS TO ASSIST IN THE FABRICATION AND/OR PLACEMENT OF CONSTRUCTION ELEMENTS BUT IT IS THE SOLE RESPONSIBILITY OF THE CONTRACTOR TO FIELD VERIFY THE DIMENSIONS, MEASUREMENTS, AND/OR CLEARANCES SHOWN IN THE CONSTRUCTION DRAWINGS PRIOR TO FABRICATION OR CUTTING OF ANY NEW OR EXISTING CONSTRUCTION ELEMENTS. IF IT IS DETERMINED THAT THERE ARE DISCREPANCIES AND/OR CONFLICTS WITH THE CONSTRUCTION DRAWINGS THE ENGINEER OF RECORD IS TO BE NOTIFIED AS SOON AS POSSIBLE.
6. PRIOR TO THE SUBMISSION OF BIDS, THE BIDDING CONTRACTOR SHALL VISIT THE CELL SITE TO FAMILIARIZE WITH THE EXISTING CONDITIONS AND TO CONFIRM THAT THE WORK CAN BE ACCOMPLISHED AS SHOWN ON THE CONSTRUCTION DRAWINGS. ANY DISCREPANCY FOUND SHALL BE BROUGHT TO THE ATTENTION OF CROWN CASTLE.
7. ALL MATERIALS FURNISHED AND INSTALLED SHALL BE IN STRICT ACCORDANCE WITH ALL APPLICABLE CODES, REGULATIONS AND ORDINANCES. CONTRACTOR SHALL ISSUE ALL APPROPRIATE NOTICES AND COMPLY WITH ALL LAWS, ORDINANCES, RULES, REGULATIONS AND LAWFUL ORDERS OF ANY PUBLIC AUTHORITY REGARDING THE PERFORMANCE OF THE WORK. ALL WORK CARRIED OUT SHALL COMPLY WITH ALL APPLICABLE MUNICIPAL AND UTILITY COMPANY SPECIFICATIONS AND LOCAL JURISDICTIONAL CODES, ORDINANCES AND APPLICABLE REGULATIONS.
8. UNLESS NOTED OTHERWISE, THE WORK SHALL INCLUDE FURNISHING MATERIALS, EQUIPMENT, APPURTENANCES AND LABOR NECESSARY TO COMPLETE ALL INSTALLATIONS AS INDICATED ON THE DRAWINGS.
9. THE CONTRACTOR SHALL INSTALL ALL EQUIPMENT AND MATERIALS IN ACCORDANCE WITH MANUFACTURER'S RECOMMENDATIONS UNLESS SPECIFICALLY STATED OTHERWISE.
10. IF THE SPECIFIED EQUIPMENT CAN NOT BE INSTALLED AS SHOWN ON THESE DRAWINGS, THE CONTRACTOR SHALL PROPOSE AN ALTERNATIVE INSTALLATION FOR APPROVAL BY THE CARRIER AND CROWN CASTLE PRIOR TO PROCEEDING WITH ANY SUCH CHANGE OF INSTALLATION.
11. CONTRACTOR IS TO PERFORM A SITE INVESTIGATION AND IS TO DETERMINE THE BEST ROUTING OF ALL CONDUITS FOR POWER, AND TELCO AND FOR GROUNDING CABLES AS SHOWN IN THE POWER, TELCO, AND GROUNDING PLAN DRAWINGS.
12. THE CONTRACTOR SHALL PROTECT EXISTING IMPROVEMENTS, PAVEMENTS, CURBS, LANDSCAPING AND STRUCTURES. ANY DAMAGED PART SHALL BE REPAIRED AT CONTRACTOR'S EXPENSE TO THE SATISFACTION OF CROWN CASTLE USA INC.
13. CONTRACTOR SHALL LEGALLY AND PROPERLY DISPOSE OF ALL SCRAP MATERIALS SUCH AS COAXIAL CABLES AND OTHER ITEMS REMOVED FROM THE EXISTING FACILITY. ANTENNAS REMOVED SHALL BE RETURNED TO THE OWNER'S DESIGNATED LOCATION.
14. CONTRACTOR SHALL LEAVE PREMISES IN CLEAN CONDITION. TRASH AND DEBRIS SHOULD BE REMOVED FROM SITE ON A DAILY BASIS.

CONCRETE, FOUNDATIONS, AND REINFORCING STEEL:

1. ALL CONCRETE WORK SHALL BE IN ACCORDANCE WITH THE ACI 301, ACI 318, ACI 336, ASTM A184, ASTM A185 AND THE DESIGN AND CONSTRUCTION SPECIFICATION FOR CAST-IN-PLACE CONCRETE.
2. UNLESS NOTED OTHERWISE, SOIL BEARING PRESSURE USED FOR DESIGN OF SLABS AND FOUNDATIONS IS ASSUMED TO BE 1000 psf.
3. ALL CONCRETE SHALL HAVE A MINIMUM COMPRESSIVE STRENGTH (f'c) OF 3000 psi AT 28 DAYS, UNLESS NOTED OTHERWISE. NO MORE THAN 90 MINUTES SHALL ELAPSE FROM BATCH TIME TO TIME OF PLACEMENT UNLESS APPROVED BY THE ENGINEER OF RECORD. TEMPERATURE OF CONCRETE SHALL NOT EXCEED 90°F AT TIME OF PLACEMENT.
4. CONCRETE EXPOSED TO FREEZE-THAW CYCLES SHALL CONTAIN AIR ENTRAINING ADMIXTURES. AMOUNT OF AIR ENTRAINMENT TO BE BASED ON SIZE OF AGGREGATE AND F3 CLASS EXPOSURE (VERY SEVERE). CEMENT USED TO BE TYPE II PORTLAND CEMENT WITH A MAXIMUM WATER-TO-CEMENT RATIO (W/C) OF 0.45.
5. ALL STEEL REINFORCING SHALL CONFORM TO ASTM A615. ALL WELDED WIRE FABRIC (WWF) SHALL CONFORM TO ASTM A185. ALL SPLICES SHALL BE CLASS "B" TENSION SPLICES, UNLESS NOTED OTHERWISE. ALL HOOKS SHALL BE STANDARD 90 DEGREE HOOKS, UNLESS NOTED OTHERWISE. YIELD STRENGTH (Fy) OF STANDARD DEFORMED BARS ARE AS FOLLOWS:
   #4 BARS AND SMALLER..... 40 ksi
   #5 BARS AND LARGER..... 60 ksi
6. THE FOLLOWING MINIMUM CONCRETE COVER SHALL BE PROVIDED FOR REINFORCING STEEL UNLESS SHOWN OTHERWISE ON DRAWINGS:
   CONCRETE CAST AGAINST AND PERMANENTLY EXPOSED TO EARTH..... 3"
   CONCRETE EXPOSED TO EARTH OR WEATHER:
   #6 BARS AND LARGER..... 2"
   #5 BARS AND SMALLER..... 1-1/2"
   CONCRETE NOT EXPOSED TO EARTH OR WEATHER:
   SLAB AND WALLS..... 3/4"
   BEAMS AND COLUMNS..... 1-1/2"
7. A TOOLED EDGE OR A 3/4" CHAMFER SHALL BE PROVIDED AT ALL EXPOSED EDGES OF CONCRETE, UNLESS NOTED OTHERWISE, IN ACCORDANCE WITH ACI 301 SECTION 4.2.4.

GREENFIELD GROUNDING NOTES:

1. ALL GROUND ELECTRODE SYSTEMS (INCLUDING TELECOMMUNICATION, RADIO, LIGHTNING PROTECTION AND AC POWER GES'S) SHALL BE BONDED TOGETHER AT OR BELOW GRADE, BY TWO OR MORE COPPER BONDING CONDUCTORS IN ACCORDANCE WITH THE NEC.
2. THE CONTRACTOR SHALL PERFORM IEEE FALL-OF-POTENTAL RESISTANCE TO EARTH TESTING (PER IEEE 1100 AND 81) FOR GROUND ELECTRODE SYSTEMS. THE CONTRACTOR SHALL FURNISH AND INSTALL SUPPLEMENTAL GROUND ELECTRODES AS NEEDED TO ACHIEVE A TEST RESULT OF 5 OHMS OR LESS.
3. THE CONTRACTOR IS RESPONSIBLE FOR PROPERLY SEQUENCING GROUNDING AND UNDERGROUND CONDUIT INSTALLATION AS TO PREVENT ANY LOSS OF CONTINUITY IN THE GROUNDING SYSTEM OR DAMAGE TO THE CONDUIT AND PROVIDE TESTING RESULTS.
4. METAL CONDUIT AND TRAY SHALL BE GROUNDED AND MADE ELECTRICALLY CONTINUOUS WITH LISTED BONDING FITTINGS OR BY BONDING ACROSS THE DISCONTINUITY WITH #6 COPPER WIRE UL APPROVED GROUNDING TYPE CONDUIT CLAMPS.
5. METAL RACEWAY SHALL NOT BE USED AS THE NEC REQUIRED EQUIPMENT GROUND CONDUCTOR. STRANDED COPPER CONDUCTORS WITH GREEN INSULATION, SIZED IN ACCORDANCE WITH THE NEC, SHALL BE FURNISHED AND INSTALLED WITH THE POWER CIRCUITS TO BTS EQUIPMENT.
6. EACH CABINET FRAME SHALL BE DIRECTLY CONNECTED TO THE MASTER GROUND BAR WITH GREEN INSULATED SUPPLEMENTAL EQUIPMENT GROUND WIRES, #6 STRANDED COPPER OR LARGER FOR INDOOR BTS; #2 BARE SOLID TINNED COPPER FOR OUTDOOR BTS.
7. CONNECTIONS TO THE GROUND BUS SHALL NOT BE DOUBLED UP OR STACKED BACK TO BACK. CONNECTIONS ON OPPOSITE SIDE OF THE GROUND BUS ARE PERMITTED.
8. ALL EXTERIOR GROUND CONDUCTORS BETWEEN EQUIPMENT/GROUND BARS AND THE GROUND RING SHALL BE #2 SOLID TINNED COPPER UNLESS OTHERWISE INDICATED.
9. ALUMINUM CONDUCTOR OR COPPER CLAD STEEL CONDUCTOR SHALL NOT BE USED FOR GROUNDING CONNECTIONS.
10. USE OF 90° BENDS IN THE PROTECTION GROUNDING CONDUCTORS SHALL BE AVOIDED WHEN 45° BENDS CAN BE ADEQUATELY SUPPORTED.
11. EXOTHERMIC WELDS SHALL BE USED FOR ALL GROUNDING CONNECTIONS BELOW GRADE.
12. ALL GROUND CONNECTIONS ABOVE GRADE (INTERIOR AND EXTERIOR) SHALL BE FORMED USING HIGH PRESS CRIMPS.
13. COMPRESSION GROUND CONNECTIONS MAY BE REPLACED BY EXOTHERMIC WELD CONNECTIONS.
14. ICE BRIDGE BONDING CONDUCTORS SHALL BE EXOTHERMICALLY BONDED OR BOLTED TO THE BRIDGE AND THE TOWER GROUND BAR.
15. APPROVED ANTIOXIDANT COATINGS (i.e. CONDUCTIVE GEL OR PASTE) SHALL BE USED ON ALL COMPRESSION AND BOLTED GROUND CONNECTIONS.
16. ALL EXTERIOR GROUND CONNECTIONS SHALL BE COATED WITH A CORROSION RESISTANT MATERIAL.
17. MISCELLANEOUS ELECTRICAL AND NON-ELECTRICAL METAL BOXES, FRAMES AND SUPPORTS SHALL BE BONDED TO THE GROUND RING, IN ACCORDANCE WITH THE NEC.
18. BOND ALL METALLIC OBJECTS WITHIN 6 ft OF MAIN GROUND RING WITH (1) #2 BARE SOLID TINNED COPPER GROUND CONDUCTOR.
19. GROUND CONDUCTORS USED FOR THE FACILITY GROUNDING AND LIGHTNING PROTECTION SYSTEMS SHALL NOT BE ROUTED THROUGH METALLIC OBJECTS THAT FORM A RING AROUND THE CONDUCTOR, SUCH AS METALLIC CONDUITS, METAL SUPPORT CLIPS OR SLEEVES THROUGH WALLS OR FLOORS. WHEN IT IS REQUIRED TO BE HOUSED IN CONDUIT TO MEET CODE REQUIREMENTS OR LOCAL CONDITIONS, NON-METALLIC MATERIAL SUCH AS PVC CONDUIT SHALL BE USED. WHERE USE OF METAL CONDUIT IS UNAVOIDABLE (i.e., NONMETALLIC CONDUIT PROHIBITED BY LOCAL CODE) THE GROUND CONDUCTOR SHALL BE BONDED TO EACH END OF THE METAL CONDUIT.
20. ALL GROUNDS THAT TRANSITION FROM BELOW GRADE TO ABOVE GRADE MUST BE #2 BARE SOLID TINNED COPPER IN 3/4" NON-METALLIC, FLEXIBLE CONDUIT FROM 24" BELOW GRADE TO WITHIN 3" TO 6" OF CAD-WELD TERMINATION POINT. THE EXPOSED END OF THE CONDUIT MUST BE SEALED WITH SILICONE CAULK. (ADD TRANSITIONING GROUND STANDARD DETAIL AS WELL).
21. BUILDINGS WHERE THE MAIN GROUNDING CONDUCTORS ARE REQUIRED TO BE ROUTED TO GRADE, THE CONTRACTOR SHALL ROUTE TWO GROUNDING CONDUCTORS FROM THE ROOFTOP, TOWERS, AND WATER TOWERS GROUNDING RING, TO THE EXISTING GROUNDING SYSTEM. THE GROUNDING CONDUCTORS SHALL NOT BE SMALLER THAN 2/0 COPPER. ROOFTOP GROUNDING RING SHALL BE BONDED TO THE EXISTING GROUNDING SYSTEM, THE BUILDING STEEL COLUMNS, LIGHTNING PROTECTION SYSTEM, AND BUILDING MAIN WATER LINE (FERROUS OR NONFERROUS METAL PIPING ONLY).

ELECTRICAL INSTALLATION NOTES:

1. ALL ELECTRICAL WORK SHALL BE PERFORMED IN ACCORDANCE WITH THE PROJECT SPECIFICATIONS, NEC AND ALL APPLICABLE FEDERAL, STATE, AND LOCAL CODES/ORDINANCES.
2. CONDUIT ROUTINGS ARE SCHEMATIC. CONTRACTOR SHALL INSTALL CONDUITS SO THAT ACCESS TO EQUIPMENT IS NOT BLOCKED AND TRIP HAZARDS ARE ELIMINATED.
3. WIRING, RACEWAY AND SUPPORT METHODS AND MATERIALS SHALL COMPLY WITH THE REQUIREMENTS OF THE NEC.
4. ALL CIRCUITS SHALL BE SEGREGATED AND MAINTAIN MINIMUM CABLE SEPARATION AS REQUIRED BY THE NEC.
   4.1. ALL EQUIPMENT SHALL BEAR THE UNDERWRITERS LABORATORIES LABEL OF APPROVAL, AND SHALL CONFORM TO REQUIREMENT OF THE NATIONAL ELECTRICAL CODE.
   4.2. ALL OVERCURRENT DEVICES SHALL HAVE AN INTERRUPTING CURRENT RATING THAT SHALL BE GREATER THAN THE SHORT CIRCUIT CURRENT TO WHICH THEY ARE SUBJECTED, 22,000 AIC MINIMUM. VERIFY AVAILABLE SHORT CIRCUIT CURRENT DOES NOT EXCEED THE RATING OF ELECTRICAL EQUIPMENT IN ACCORDANCE WITH ARTICLE 110.24 NEC OR THE MOST CURRENT ADOPTED CODE PER THE GOVERNING JURISDICTION.
5. EACH END OF EVERY POWER PHASE CONDUCTOR, GROUNDING CONDUCTOR, AND TELCO CONDUCTOR OR CABLE SHALL BE LABELLED WITH COLOR-CODED INSULATION OR ELECTRICAL TAPE (3M BRAND, 1/2" PLASTIC ELECTRICAL TAPE WITH UV PROTECTION, OR EQUAL). THE IDENTIFICATION METHOD SHALL CONFORM WITH NEC AND OSHA.
6. ALL ELECTRICAL COMPONENTS SHALL BE CLEARLY LABELED WITH LAMICOID TAGS SHOWING THEIR RATED VOLTAGE, PHASE CONFIGURATION, WIRE CONFIGURATION, POWER OR AMPACITY RATING AND BRANCH CIRCUIT ID NUMBERS (i.e. PANEL BOARD AND CIRCUIT ID'S).
7. PANEL BOARDS (ID NUMBERS) SHALL BE CLEARLY LABELED WITH PLASTIC LABELS.
8. ALL TIE WRAPS SHALL BE CUT FLUSH WITH APPROVED CUTTING TOOL TO REMOVE SHARP EDGES.
9. ALL POWER AND EQUIPMENT GROUND WIRING IN TUBING OR CONDUIT SHALL BE SINGLE COPPER CONDUCTOR (#12 OR LARGER) WITH TYPE THHW, THWN, THWN-2, XHHW, XHHW-2, THW, THW-2, RHW, OR RHW-2 INSULATION UNLESS OTHERWISE SPECIFIED.
10. SUPPLEMENTAL EQUIPMENT GROUND WIRING LOCATED INDOORS SHALL BE SINGLE COPPER CONDUCTOR (#6 OR LARGER) WITH TYPE THHW, THWN, THWN-2, XHHW, XHHW-2, THW, THW-2, RHW, OR RHW-2 INSULATION UNLESS OTHERWISE SPECIFIED.
11. POWER AND CONTROL WIRING IN FLEXIBLE CORD SHALL BE MULTI-CONDUCTOR, TYPE SOOW CORD (#14 OR LARGER) UNLESS OTHERWISE SPECIFIED.
12. POWER AND CONTROL WIRING FOR USE IN CABLE TRAY SHALL BE MULTI-CONDUCTOR, TYPE TC CABLE (#14 OR LARGER), WITH TYPE THHW, THWN, THWN-2, XHHW, XHHW-2, THW, THW-2, RHW, OR RHW-2 INSULATION UNLESS OTHERWISE SPECIFIED.
13. ALL POWER AND GROUNDING CONNECTIONS SHALL BE CRIMP-STYLE. COMPRESSION WIRE LUGS AND WIRE NUTS BY THOMAS AND BETTS (OR EQUAL). LUGS AND WIRE NUTS SHALL BE RATED FOR OPERATION NOT LESS THAN 75° C (90° C IF AVAILABLE).
14. RACEWAY AND CABLE TRAY SHALL BE LISTED OR LABELED FOR ELECTRICAL USE IN ACCORDANCE WITH NEMA, UL, ANSI/IEEE AND NEC.
15. ELECTRICAL METALLIC TUBING (EMT), INTERMEDIATE METAL CONDUIT (IMC), OR RIGID METAL CONDUIT (RMC) SHALL BE USED FOR EXPOSED INDOOR LOCATIONS.
16. ELECTRICAL METALLIC TUBING (EMT) OR METAL-CLAD CABLE (MC) SHALL BE USED FOR CONCEALED INDOOR LOCATIONS.
17. SCHEDULE 40 PVC UNDERGROUND ON STRAIGHTS AND SCHEDULE 80 PVC FOR ALL ELBOWS/90s AND ALL APPROVED ABOVE GRADE PVC CONDUIT.
18. LIQUID-TIGHT FLEXIBLE METALLIC CONDUIT (LIQUID-TITE FLEX) SHALL BE USED INDOORS AND OUTDOORS, WHERE VIBRATION OCCURS OR FLEXIBILITY IS NEEDED.
19. CONDUIT AND TUBING FITTINGS SHALL BE THREADED OR COMPRESSION-TYPE AND APPROVED FOR THE LOCATION USED. SET SCREW FITTINGS ARE NOT ACCEPTABLE.
20. CABINETS, BOXES AND WIRE WAYS SHALL BE LABELED FOR ELECTRICAL USE IN ACCORDANCE WITH NEMA, UL, ANSI/IEEE AND THE NEC.
21. WIREWAYS SHALL BE METAL WITH AN ENAMEL FINISH AND INCLUDE A HINGED COVER, DESIGNED TO SWING OPEN DOWNWARDS (WIREMOLD SPECMATE WIREWAY).
22. SLOTTED WIRING DUCT SHALL BE PVC AND INCLUDE COVER (PANDUIT TYPE E OR EQUAL).
23. CONDUITS SHALL BE FASTENED SECURELY IN PLACE WITH APPROVED NON-PERFORATED STRAPS AND HANGERS. EXPLOSIVE DEVICES (i.e. POWDER-ACTUATED) FOR ATTACHING HANGERS TO STRUCTURE WILL NOT BE PERMITTED. CLOSELY FOLLOW THE LINES OF THE STRUCTURE, MAINTAIN CLOSE PROXIMITY TO THE STRUCTURE AND KEEP CONDUITS IN TIGHT ENVELOPES. CHANGES IN DIRECTION TO ROUTE AROUND OBSTACLES SHALL BE MADE WITH CONDUIT OUTLET BODIES. CONDUIT SHALL BE INSTALLED IN A NEAT AND WORKMANLIKE MANNER. PARALLEL AND PERPENDICULAR TO STRUCTURE WALL AND CEILING LINES. ALL CONDUIT SHALL BE FISHED TO CLEAR OBSTRUCTIONS. ENDS OF CONDUITS SHALL BE TEMPORARILY CAPPED FLUSH TO FINISH GRADE TO PREVENT CONCRETE, PLASTER OR DIRT FROM ENTERING. CONDUITS SHALL BE RIGIDLY CLAMPED TO BOXES BY GALVANIZED MALLEABLE IRON BUSHING ON INSIDE AND GALVANIZED MALLEABLE IRON LOCKNUT ON OUTSIDE AND INSIDE.
24. EQUIPMENT CABINETS, TERMINAL BOXES, JUNCTION BOXES AND PULL BOXES SHALL BE GALVANIZED OR EPOXY-COATED SHEET STEEL. SHALL MEET OR EXCEED UL 50 AND BE RATED NEMA 1 (OR BETTER) FOR INTERIOR LOCATIONS AND NEMA 3R (OR BETTER) FOR EXTERIOR LOCATIONS.
25. METAL RECEPTACLE, SWITCH AND DEVICE BOXES SHALL BE GALVANIZED, EPOXY-COATED OR NON-CORRODING; SHALL MEET OR EXCEED UL 514A AND NEMA OS 1 AND BE RATED NEMA 1 (OR BETTER) FOR INTERIOR LOCATIONS AND WEATHER PROTECTED (WP OR BETTER) FOR EXTERIOR LOCATIONS.
26. NONMETALLIC RECEPTACLE, SWITCH AND DEVICE BOXES SHALL MEET OR EXCEED NEMA OS 2 (NEWEST REVISION) AND BE RATED NEMA 1 (OR BETTER) FOR INTERIOR LOCATIONS AND WEATHER PROTECTED (WP OR BETTER) FOR EXTERIOR LOCATIONS.
27. THE CONTRACTOR SHALL NOTIFY AND OBTAIN NECESSARY AUTHORIZATION FROM THE CARRIER AND/OR CROWN CASTLE USA INC. BEFORE COMMENCING WORK ON THE AC POWER DISTRIBUTION PANELS.
28. THE CONTRACTOR SHALL PROVIDE NECESSARY TAGGING ON THE BREAKERS, CABLES AND DISTRIBUTION PANELS IN ACCORDANCE WITH THE APPLICABLE CODES AND STANDARDS TO SAFEGUARD LIFE AND PROPERTY.
29. INSTALL LAMICOID LABEL ON THE METER CENTER TO SHOW "T-MOBILE".
30. ALL EMPTY/SPARE CONDUITS THAT ARE INSTALLED ARE TO HAVE A METERED MULE TAPE PULL CORD INSTALLED.

CONDUCTOR COLOR CODE

SYSTEM	CONDUCTOR	COLOR
120/240V, 1Ø	A PHASE	BLACK
	B PHASE	RED
	NEUTRAL	WHITE
	GROUND	GREEN
120/208V, 3Ø	A PHASE	BLACK
	B PHASE	RED
	C PHASE	BLUE
	NEUTRAL	WHITE
	GROUND	GREEN
277/480V, 3Ø	A PHASE	BROWN
	B PHASE	ORANGE OR PURPLE
	C PHASE	YELLOW
	NEUTRAL	GREY
	GROUND	GREEN
DC VOLTAGE	POS (+)	RED**
	NEG (-)	BLACK**

* SEE NEC 210.5(C)(1) AND (2)
** POLARITY MARKED AT TERMINATION

APWA UNIFORM COLOR CODE:

WHITE	PROPOSED EXCAVATION
PINK	TEMPORARY SURVEY MARKIN

DigiSigner Document ID: d0dff10a-7aae-48fd-85bf-5ed21f60df6e

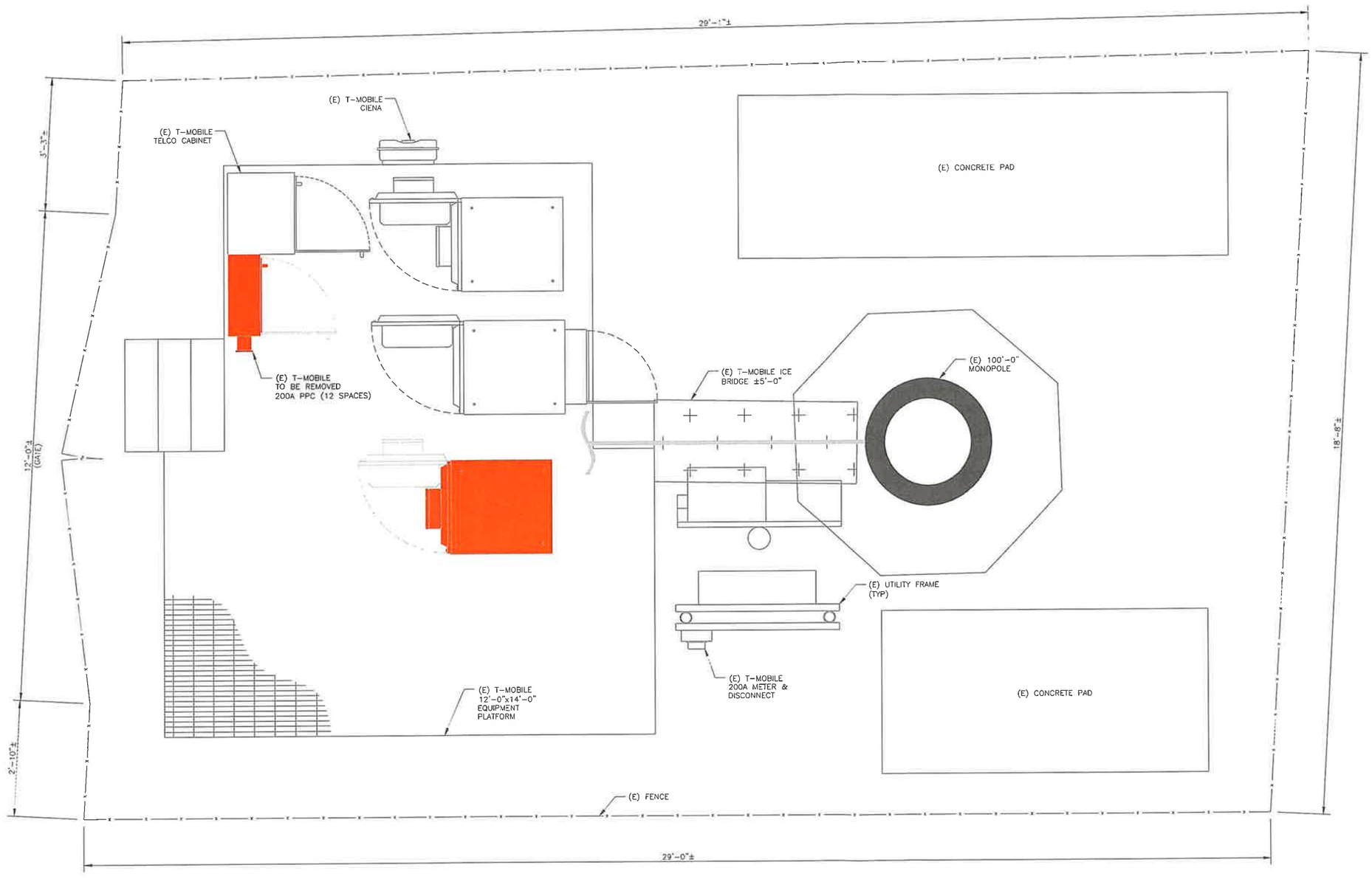

1 SITE PLAN
SCALE: 1' 0 1' 2' 4' 3/4"=1'-0" (FULL SIZE) 3/8"=1'-0" (11x17)

N

T-Mobile
8550 W. BRYN MAWR AVE, SUITE 100
CHICAGO, IL 60631

CROWN CASTLE
3025 HIGHLAND PKWY, SUITE 510,
DOWNERS GROVE, IL, 60515

POD
POWER OF DESIGN
11490 BLUEGRASS PKWY
LOUISVILLE, KY 40299
502-437-5252

T-MOBILE SITE NUMBER:
CH80545A

BU #: **875515**
180 ANETS

180 NORTH ANETS DRIVE
NORTHBROOK, IL 60062

EXISTING 100'-0" MONOPOLE

ISSUED FOR:

REV	DATE	DRWN	DESCRIPTION	DES /QA
0	6/21/2023	AS	CONSTRUCTION	MEP

MARK E. PATTERSON
062-067337
LICENSED PROFESSIONAL ENGINEER
STATE OF ILLINOIS
06/21/2023
EXPIRIES: 11/30/2023

IT IS A VIOLATION OF LAW FOR ANY PERSON, UNLESS THEY ARE ACTING UNDER THE DIRECTION OF A LICENSED PROFESSIONAL ENGINEER, TO ALTER THIS DOCUMENT.

SHEET NUMBER: C-1.1
REVISION: 0

DigiSigner Document ID: d0dff40a-7aae-48fd-85bf-5ed24f60df6e

EQUIPMENT LEGEND:

- EXISTING
- TO BE RELOCATED/REMOVED
- NEW

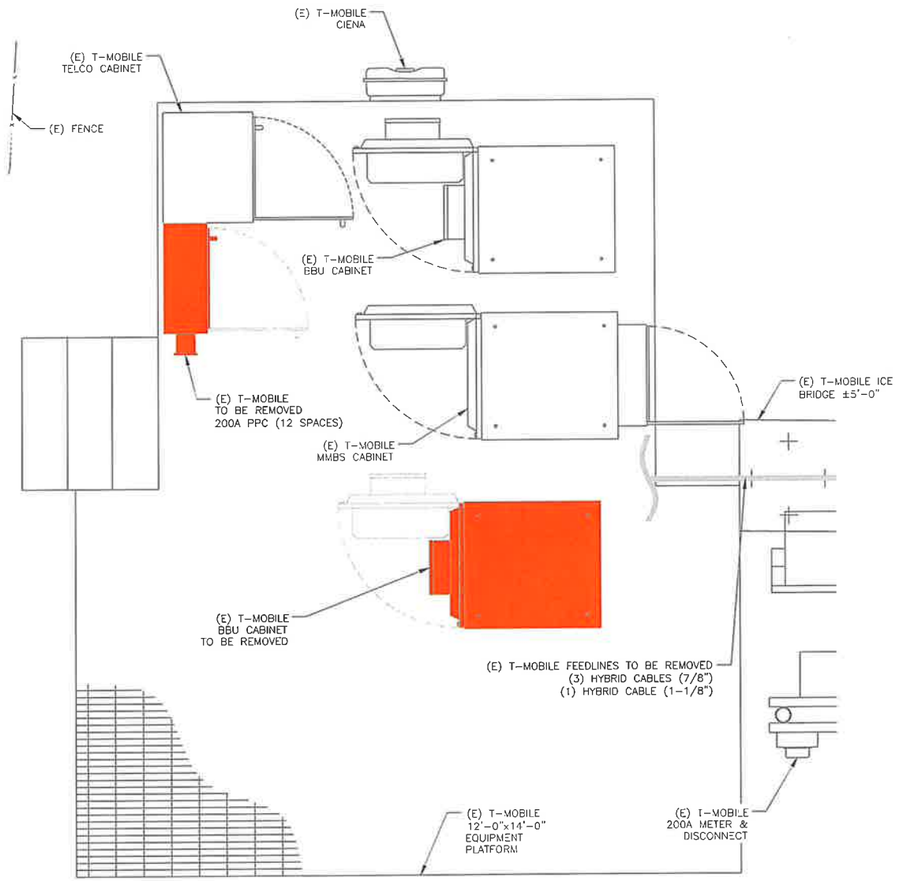

1 EXISTING EQUIPMENT PLAN
SCALE: 1' 0 1' 3/4"=1'-0" (FULL SIZE) 3/8"=1'-0" (11x17)

N

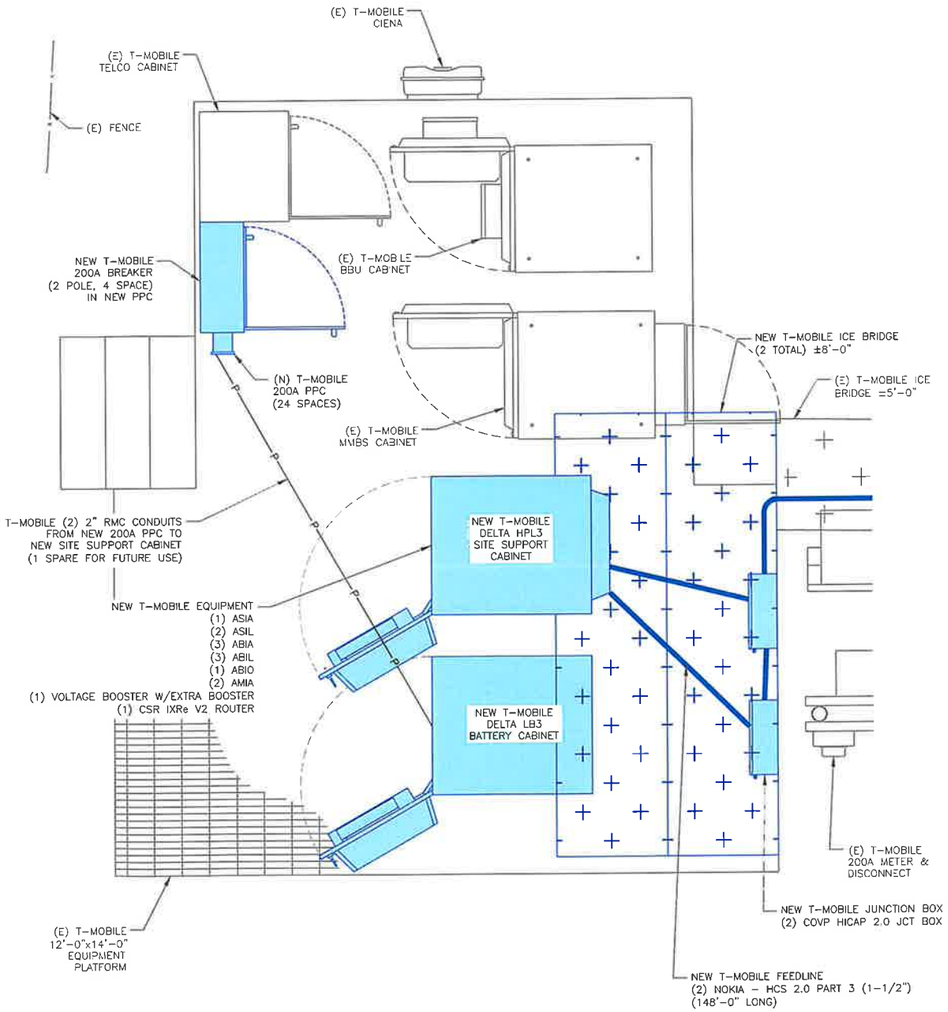

2 FINAL EQUIPMENT PLAN
SCALE: 1' 0 1' 3/4"=1'-0" (FULL SIZE) 3/8"=1'-0" (11x17)

N

T-Mobile
8550 W. BRYN MAWR AVE, SUITE 100
CHICAGO, IL 60631

CROWN CASTLE
3025 HIGHLAND PKWY, SUITE 510,
DOWNERS GROVE, IL, 60515

POD
POWER OF DESIGN
11490 BLUEGRASS PKWY
LOUISVILLE, KY 40299
502-437-5252

T-MOBILE SITE NUMBER:
CH80545A

BU #: **875515**
180 ANETS

180 NORTH ANETS DRIVE
NORTHBROOK, IL 60062

EXISTING 100'-0" MONOPOLE

ISSUED FOR:

REV	DATE	DRWN	DESCRIPTION	DES /QA
0	6/21/2023	AS	CONSTRUCTION	MEP

MARK A. PATTERSON
062-067337
LICENSED PROFESSIONAL ENGINEER
STATE OF ILLINOIS
06/21/2023
EXPIRES: 11/30/2023

IT IS A VIOLATION OF LAW FOR ANY PERSON, UNLESS THEY ARE ACTING UNDER THE DIRECTION OF A LICENSED PROFESSIONAL ENGINEER, TO ALTER THIS DOCUMENT.

SHEET NUMBER: C-1.2
REVISION: 0

DigiSigner Document ID: d0dff40e-7aee-48fd-85bf-5ed24f60df6e

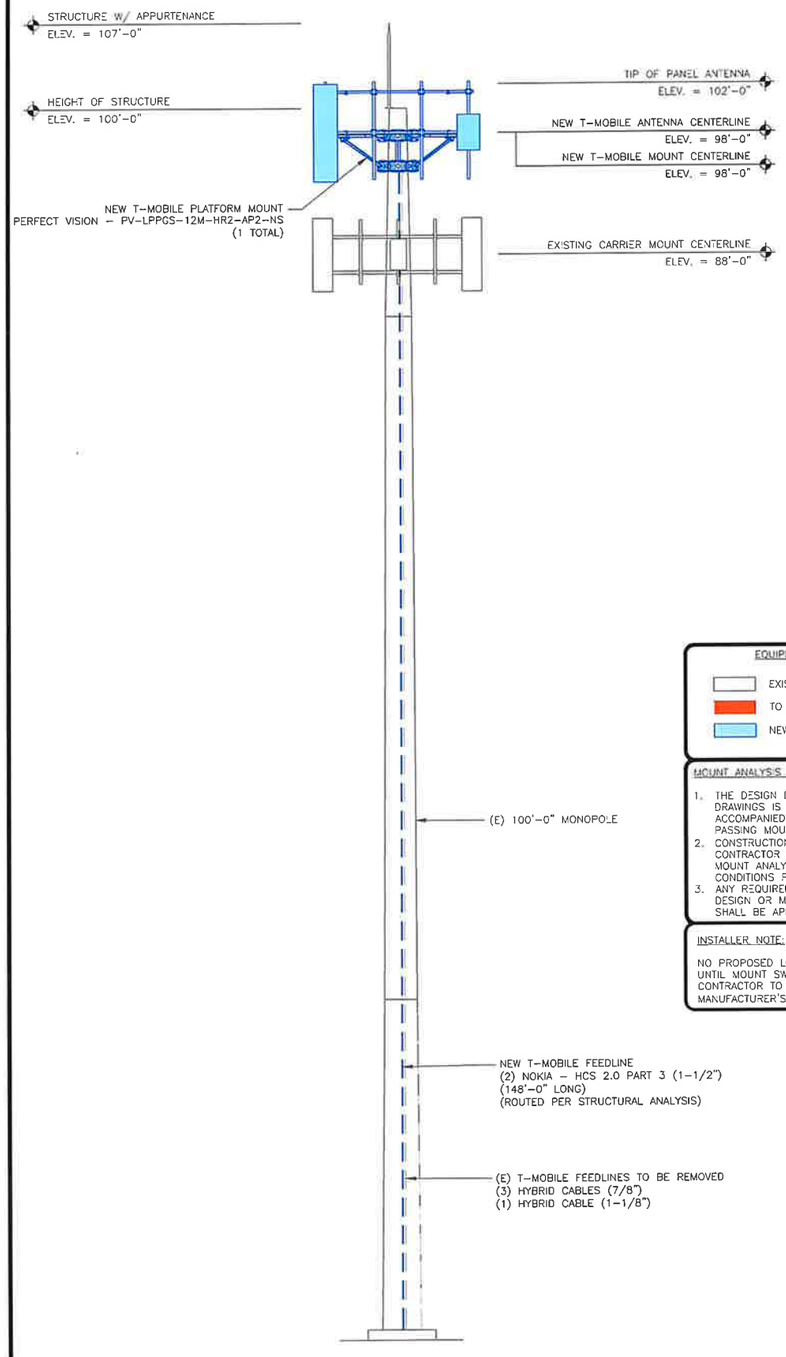

1 FINAL ELEVATION
SCALE: NOT TO SCALE

EQUIPMENT LEGEND:

- EXISTING
- TO BE RELOCATED/REMOVED
- NEW

MOUNT ANALYSIS NOTES:

1. THE DESIGN DEPICTED IN THESE DRAWINGS IS VALID WHEN ACCOMPANIED BY A CORRESPONDING PASSING MOUNT ANALYSIS.
2. CONSTRUCTION MANAGER / GENERAL CONTRACTOR SHALL REVIEW THE MOUNT ANALYSIS FOR ANY CONDITIONS PRIOR TO INSTALLATION.
3. ANY REQUIRED MOUNT MODIFICATION DESIGN OR MOUNT REPLACEMENT SHALL BE APPROVED BY EOR.

INSTALLER NOTE:

NO PROPOSED LOADING TO BE ADDED UNTIL MOUNT SWAP IS COMPLETE. CONTRACTOR TO INSTALL MOUNT PER MANUFACTURER'S SPECIFICATIONS.

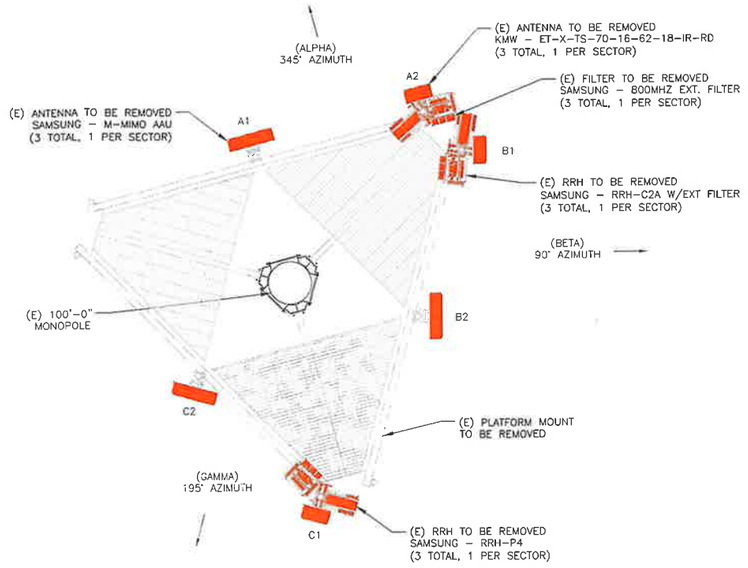

2 EXISTING ANTENNA PLAN
SCALE: NOT TO SCALE

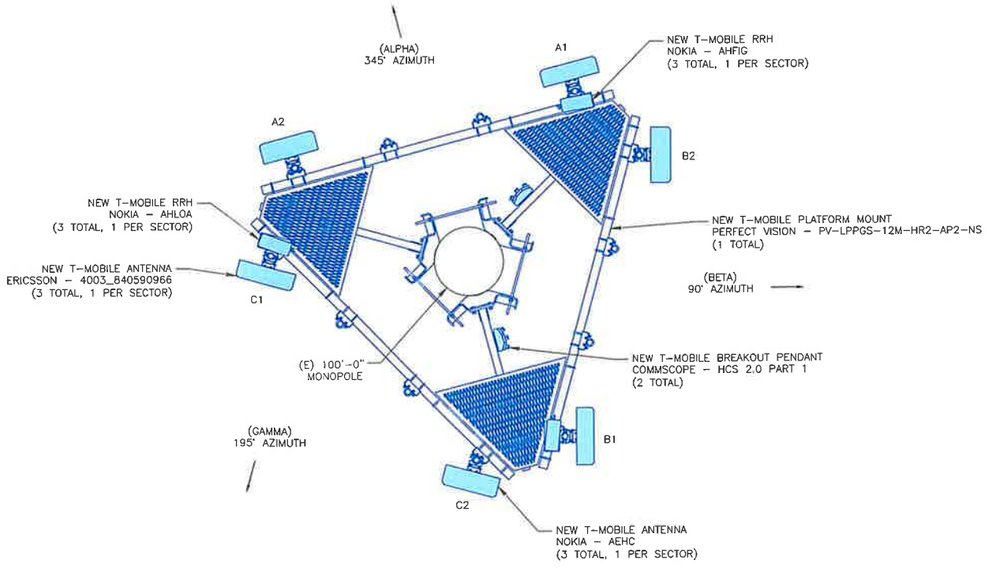

3 FINAL ANTENNA PLAN
SCALE: NOT TO SCALE

N

T-Mobile
8550 W. BRYN MAWR AVE, SUITE 100
CHICAGO, IL 60631

CROWN CASTLE
3025 HIGHLAND PKWY, SUITE 510,
DOWNERS GROVE, IL, 60515

POD
POWER OF DESIGN
11490 BLUEGRASS PKWY
LOUISVILLE, KY 40299
502-437-5252

T-MOBILE SITE NUMBER:
CH80545A

BU #: **875515**
180 ANETS

180 NORTH ANETS DRIVE
NORTHBROOK, IL 60062

EXISTING 100'-0" MONOPOLE

ISSUED FOR:

REV	DATE	DRWN	DESCRIPTION	DES /QA
0	6/21/2023	AS	CONSTRUCTION	MLP

MARK PATTERSON
062-067337
LICENSED
PROFESSIONAL
ENGINEER
STATE OF ILLINOIS
06/21/2023
EXPIRIES: 11/30/2023

IT IS A VIOLATION OF LAW FOR ANY PERSON, UNLESS THEY ARE ACTING UNDER THE DIRECTION OF A LICENSED PROFESSIONAL ENGINEER, TO ALTER THIS DOCUMENT.

SHEET NUMBER: C-2
REVISION: 0

DigiSigner Document ID: d0dff10a-7aee-48fd-85bf-5ed21f60df6e

INSTALLER NOTES:

1. COMPLY WITH MANUFACTURERS INSTRUCTIONS TO ENSURE THAT ALL RRHs RECEIVE ELECTRICAL POWER WITHIN 24 HOURS OF BEING REMOVED FROM THE MANUFACTURER'S PACKAGING.
2. DO NOT OPEN RRH PACKAGES IN THE RAIN.
3. ALL PIPES, BRACKETS, AND MISCELLANEOUS HARDWARE TO BE GALVANIZED UNLESS NOTED OTHERWISE.

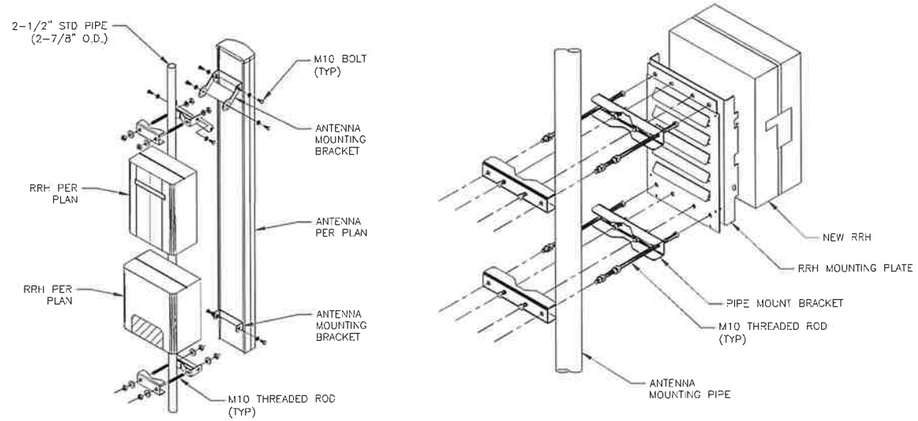

1 ANTENNA WITH RRHs MOUNTING DETAIL
SCALE: NOT TO SCALE

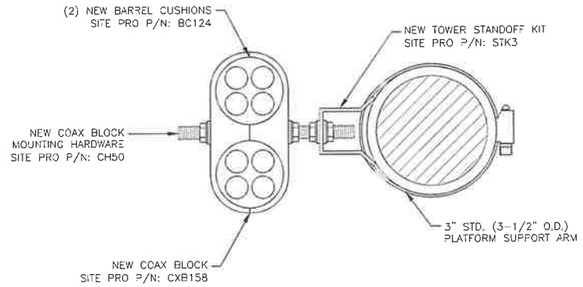

2 RF JUMPER DETAIL
SCALE: NOT TO SCALE

INSTALLER NOTE:

JUMPERS TO BE TORQUED TO 221.27 IN/LBS

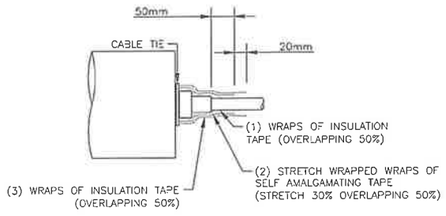

3 RF JUMPER CONNECTION
SCALE: NOT TO SCALE

4 NOT USED
SCALE: NOT TO SCALE

Coax Color Coding

- Antennas will be labeled "back of antenna" (BOA) per table #1. Azimuths (direction) from will be identified by sector color and by number of bands around the coax jumper.

SECTOR A	RED
SECTOR B	GREEN
SECTOR C	BLUE
SECTOR D	YELLOW
SECTOR E	WHITE
SECTOR F	PURPLE
LMU	BROWN - SECTOR COLOR BANDS (1 & 2)
FIBER ID	GRAY
UNUSED COAX	PINK
MICROWAVE	ORANGE
DWE T-1'S + GPS DOWNLINK CABLE	ID W/LABEL MAKER

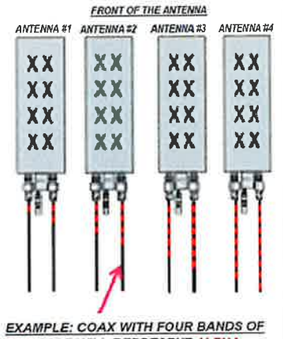

COLOR CODING NOTES:

- color GSM
- color UMTS 1900
- color UMTS AWS
- color LTE
- color FIBER CABLE

METALLIC TAG NOTES:

1. TWO METALLIC TAGS SHALL BE ATTACHED AT EACH END OF EVERY CABLE LONGER THAN (3) THREE FEET
2. CABLE LESS THAN (3) THREE FEET WILL HAVE TWO METALLIC TAGS ATTACHED AT THE CENTER OF THE CABLE.
3. TAGS WILL BE FASTENED WITH STAINLESS STEEL ZIP TIES APPROPRIATE FOR CABLE DIAMETER.
4. STANDARDIZED METALLIC TAG KIT WILL BE ASSEMBLED WITH TAGS ALREADY ENGRAVED TO ACCOMMODATE ALL CONFIGURATIONS.



ANTENNA AND COAXIAL CABLE SCHEDULE

1. ALL ANTENNAS SHALL BE FURNISHED WITH DOWNTILT BRACKETS. CONTRACTOR SHALL COORDINATE REQUIRED MECHANICAL DOWNTILT FOR EACH ANTENNA WITH RF ENGINEER. ANTENNA DOWNTILT SHALL BE SET AND VERIFIED BY A SMART LEVEL.
2. CONTRACTOR SHALL INSTALL COLOR CODE RINGS ON EACH OF THE HYBRID CABLES AND JUMPER CABLES WITH UV RESISTANT TAPE. ALL CABLE SHALL BE MARKED AT TOP AND BOTTOM WITH 2" COLOR TAPE OR STENCIL TAG. COLOR TAPE MAY BE OBTAINED FROM GRAYBAR ELECTRONICS.

5 COAX COLOR CODING
SCALE: NOT TO SCALE

T-Mobile
8550 W. BRYN MAWR AVE, SUITE 100
CHICAGO, IL 60631

CROWN CASTLE
3025 HIGHLAND PKWY, SUITE 510,
DOWNERS GROVE, IL, 60515

POD
POWER OF DESIGN
11490 BLUEGRASS PKWY
LOUISVILLE, KY 40299
502-437-5252

T-MOBILE SITE NUMBER:
CH80545A

BU #: **875515**
180 ANETS

180 NORTH ANETS DRIVE
NORTHBROOK, IL 60062

EXISTING 100'-0" MONOPOLE

ISSUED FOR:

REV	DATE	DRWN	DESCRIPTION	DES/QA
0	6/21/2023	AS	CONSTRUCTION	MLP

MARK L. PATTERSON
062-067337
LICENSED PROFESSIONAL ENGINEER
STATE OF ILLINOIS
06/21/2023
EXPIRIES: 11/30/2023

IT IS A VIOLATION OF LAW FOR ANY PERSON, UNLESS THEY ARE ACTING UNDER THE DIRECTION OF A LICENSED PROFESSIONAL ENGINEER, TO ALTER THIS DOCUMENT.

SHEET NUMBER: C-3
REVISION: 0

DigiSigner Document ID: d0dff40a-7aee-40fd-85bf-5ed21f60df6e

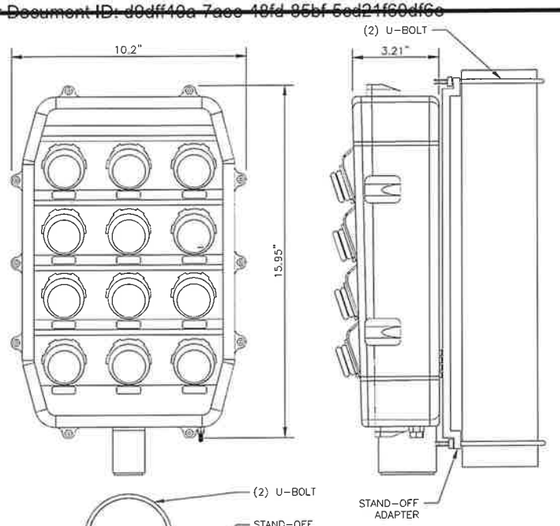

1 HCS 2.0 PENDANT DETAIL
SCALE: NOT TO SCALE

MANUFACTURER:	COMMSCOPE
MODEL:	FE-16148-OVP-B12
DIMENSIONS (HxWxD):	14"x16"x8"
WEIGHT:	15.2 LBS

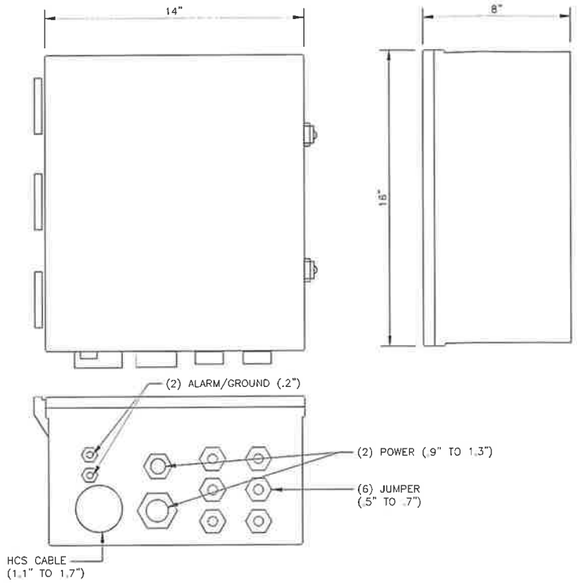

2 HI-CAP JUNCTION BOX DETAIL
SCALE: NOT TO SCALE

MANUFACTURER:	NOKIA
MODEL:	AEHC
DIMENSIONS (HxWxD):	37.95"x21.42"x5.91"
WEIGHT:	108 LBS
BAND:	B41/n41
MOUNTING KIT:	AMPF (475188A) (NOT INCLUDED)

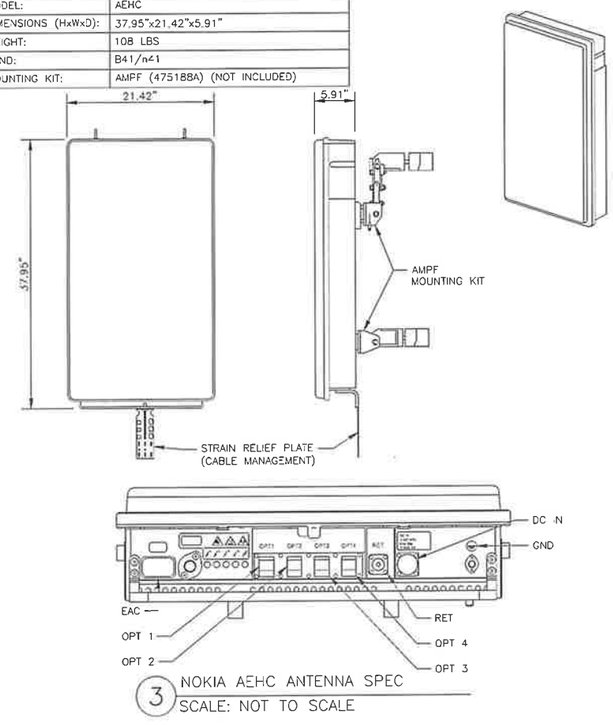

3 NOKIA AEHC ANTENNA SPEC
SCALE: NOT TO SCALE

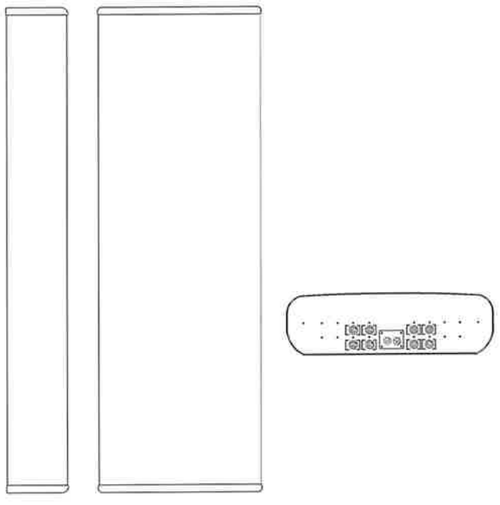

ERICSSON – 4003_840590966
WEIGHT (WITHOUT MOUNTING HARDWARE): 135.8 LBS
SIZE (HxWxD): 95.9x23.5x7.1 IN.

4 ERICSSON –4003_840590966
SCALE: NOT TO SCALE

MANUFACTURER:	NOKIA
MODEL:	AHFIG
DIMENSIONS (HxWxD):	28.7"x12.9"x5.6"
WEIGHT:	70.5 LBS

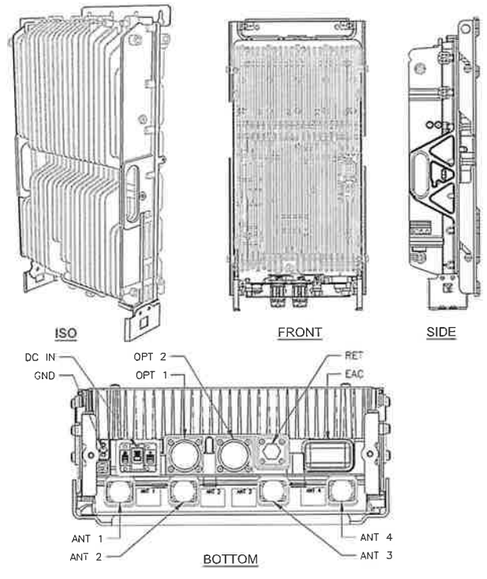

5 NOKIA AHFIG RRH
SCALE: NOT TO SCALE

MANUFACTURER:	NOKIA
MODEL:	AHLOA
DIMENSIONS (HxWxD):	22.1"x12.1"x7.4"
WEIGHT:	83.5 LBS

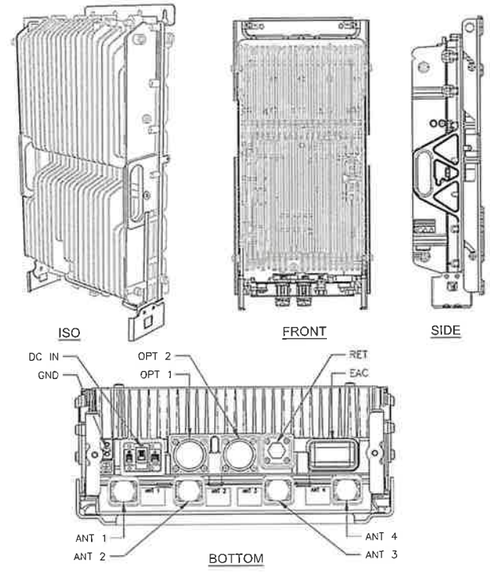

6 NOKIA AHLOA RRH
SCALE: NOT TO SCALE

T-Mobile

8550 W. BRYN MAWR AVE, SUITE 100
CHICAGO, IL 60631

CROWN CASTLE

3025 HIGHLAND PKWY, SUITE 510,
DOWNERS GROVE, IL, 60515

POD
POWER OF DESIGN
11490 BLUEGRASS PKWY
LOUISVILLE, KY 40299
502-437-5252

T-MOBILE SITE NUMBER:
CH80545A

BU #: **875515**
180 ANETS

180 NORTH ANETS DRIVE
NORTHBROOK, IL 60062

EXISTING 100'-0" MONOPOLE

ISSUED FOR:

REV	DATE	DRWN	DESCRIPTION	DES/QA
0	6/21/2023	AS	CONSTRUCTION	MEP

MARK E. PATTERSON
062-067337
LICENSED PROFESSIONAL ENGINEER
STATE OF ILLINOIS
06/21/2023
EXPIRIES: 11/30/2023

IT IS A VIOLATION OF LAW FOR ANY PERSON, UNLESS THEY ARE ACTING UNDER THE DIRECTION OF A LICENSED PROFESSIONAL ENGINEER, TO ALTER THIS DOCUMENT.

SHEET NUMBER: C-4
REVISION: 0

DigiSigner Document ID: d0dff10e-7aee-48fd-85bf-5ed21f60df6e

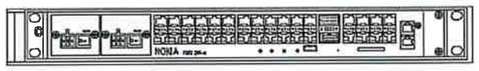

NOKIA – CSR IXRE V2 ROUTER
WEIGHT: 11.2 LBS
SIZE (HxWxD): 1.25 x 17.25 x 10.0 IN.

1 NOKIA – CSR IXRE V2 ROUTER
SCALE: NOT TO SCALE

The general specifications for the PSU 48 13 are as follows:

Electrical Operating Limits	
Input Voltage	-38.0 – -58.5 VDC
Input Voltage, nominal	-48 VDC
Input Current, max	166 A; 30 A total for all four -48V inputs
Output Voltage, fixed	-58 VDC
Output Power, max.	2000 watts each
Environmental Operating Limits	
Temperature, operation	-40 – +80 °C
Temperature, storage	-40 – +55 °C
Temperature, trasport	-40 – +70 °C
Humidity, operation and storage	5% – 95%
Altitude, operation and storage	0 – 4000 m
Cooling	Internal fans
Vibration	ETS300019-2
Shock	ETS300019-2
Drop	ETS300019-2
EMC	FCC Part 15
Safety	UL 62368-1
Noise	< 6.8 bel sound power
Lightning Protection	4 kA; 10/350 µs; 20 kA, 8/20 µs
Fuse Options	30 A, 40 A, 50 A
Mechanical Specification	
Weight	< 7.8 kg (17.2 lb)
Dimensions (H x W x D)	44 x 483 x 363 mm (1.7" x 19.0" x 14.3") (include brackets, cover)

PSU 48 13



2 VOLTAGE BOOSTER – PSU 4813
SCALE: NOT TO SCALE

3 NOT USED
SCALE: NOT TO SCALE

4 NOT USED
SCALE: NOT TO SCALE

5 NOT USED
SCALE: NOT TO SCALE

6 NOT USED
SCALE: NOT TO SCALE

T-Mobile

8550 W. BRYN MAWR AVE, SUITE 100
CHICAGO, IL 60631

CROWN CASTLE

3025 HIGHLAND PKWY, SUITE 510,
DOWNERS GROVE, IL, 60515

POD
POWER OF DESIGN

11490 BLUEGRASS PKWY
LOUISVILLE, KY 40299
502-437-5252

T-MOBILE SITE NUMBER:
CH80545A

BU #: **875515**
180 ANETS

180 NORTH ANETS DRIVE
NORTHBROOK, IL 60062

EXISTING 100'-0" MONOPOLE

ISSUED FOR:

REV	DATE	DRWN	DESCRIPTION	DES /QA
0	6/21/2023	AS	CONSTRUCTION	MEP

MARK PATTERSON
062-067337
LICENSED
PROFESSIONAL
ENGINEER
STATE OF ILLINOIS
06/21/2023
EXPIRIES: 11/30/2023

IT IS A VIOLATION OF LAW FOR ANY PERSON, UNLESS THEY ARE ACTING UNDER THE DIRECTION OF A LICENSED PROFESSIONAL ENGINEER, TO ALTER THIS DOCUMENT.

SHEET NUMBER: C-5
REVISION: 0

DigiSigner Document ID: d0dff10a-7aee-48fd-85bf-5ed21f60df6e

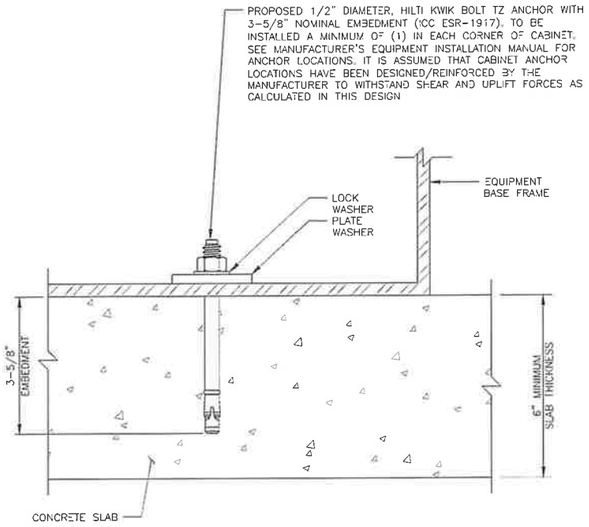

1 TYPICAL ANCHOR BOLT DETAIL
SCALE: NOT TO SCALE

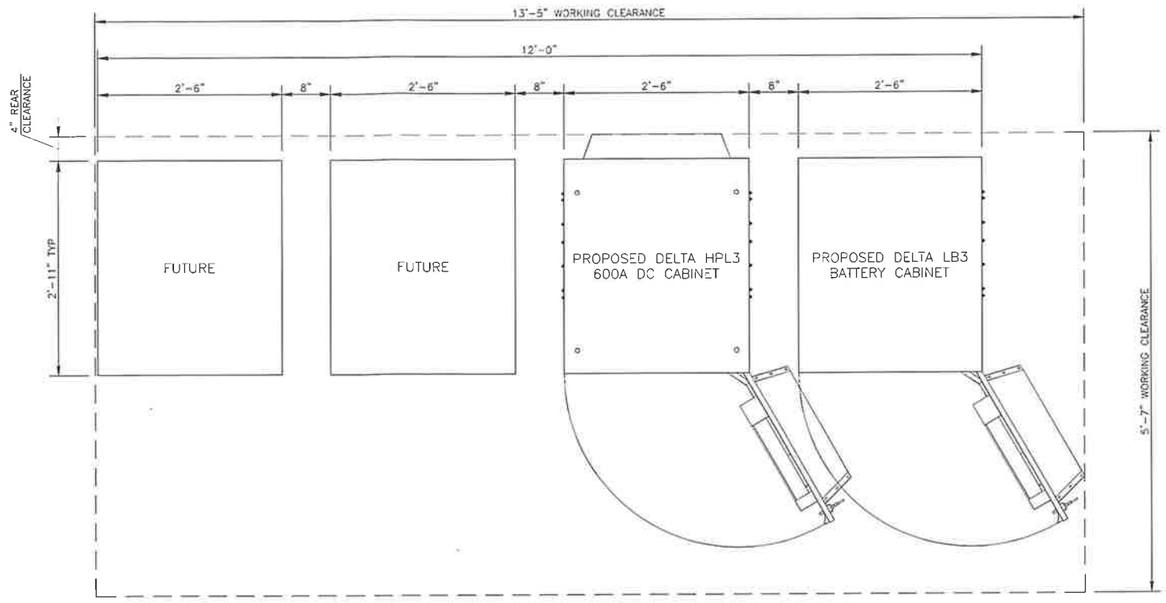

PLAN VIEW

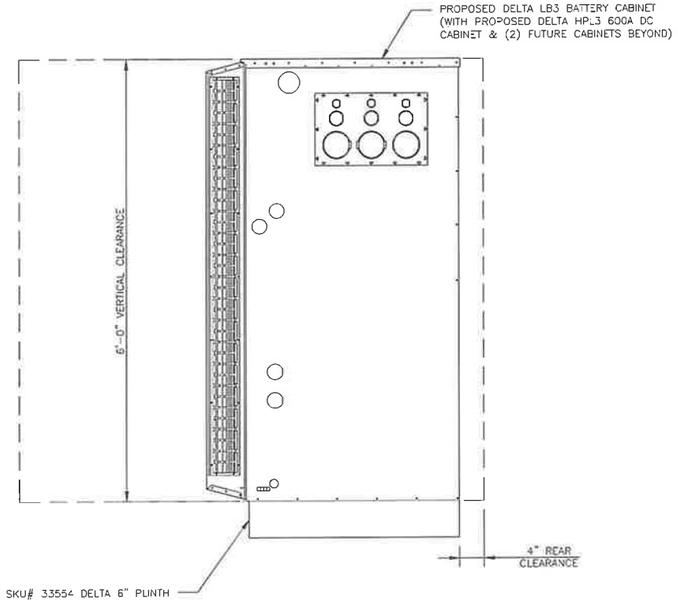

SIDE VIEW

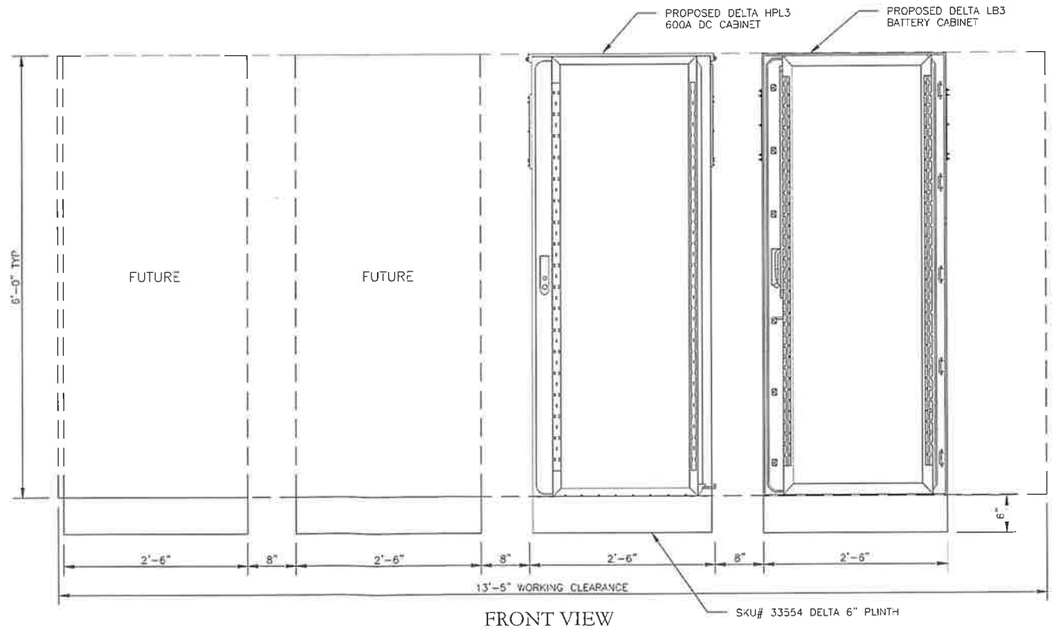

FRONT VIEW

2 DELTA HPL3 SITE SUPPORT CABINET AND LB3 LAYOUT
SCALE: NOT TO SCALE

THESE SPECIFICATIONS WERE PROVIDED BY OTHERS, POD DID NOT PREPARE THESE DETAILS

T-Mobile
8550 W. BRYN MAWR AVE, SUITE 100
CHICAGO, IL 60631

CROWN CASTLE
3025 HIGHLAND PKWY, SUITE 510,
DOWNERS GROVE, IL, 60515

POD
POWER OF DESIGN
11490 BLUEGRASS PKWY
LOUISVILLE, KY 40299
502-437-5252

T-MOBILE SITE NUMBER:
CH80545A

BU #: **875515**
180 ANETS

180 NORTH ANETS DRIVE
NORTHBROOK, IL 60062

EXISTING 100'-0" MONOPOLE

ISSUED FOR:

REV	DATE	DRWN	DESCRIPTION	DES /QA
0	6/21/2023	AS	CONSTRUCTION	MEP

MARK PATTERSON
062-067337
LICENSED PROFESSIONAL ENGINEER
STATE OF ILLINOIS
06/21/2023
EXPIRES: 11/30/2023

IT IS A VIOLATION OF LAW FOR ANY PERSON, UNLESS THEY ARE ACTING UNDER THE DIRECTION OF A LICENSED PROFESSIONAL ENGINEER, TO ALTER THIS DOCUMENT.

SHEET NUMBER:	REVISION:
C-6	0

DigiSigner Document ID: d0dff10a-7aee-48fd-85bf-5ed21f60df6e

MANUFACTURER:	DELTA
MODEL:	HPL3 SITE SUPPORT CABINET
DIMENSIONS:	72" x 30" x 35" (H x W x D)
WEIGHT:	551 LBS (WITHOUT EQUIPMENT)

NOTE:
- CORRECT KNOCKOUT TOOL REQUIRED FOR PUNCHING KNOCKOUTS. DO NOT DRILL THROUGH KNOCKOUTS
- CONDUIT MUST BE PROPERLY SECURED TO PREVENT DAMAGE TO CABINETS AND/OR CABLING

RACK ASSIGNMENT		
RU SLOT	DESCRIPTION	DESCRIPTION
1	RAYCAP BOOSTER #1	CSR - SAR/SAS
2	RAYCAP BOOSTER #2	
3	AIRSCALE #1	
4		
5		
6	FIBER MUX #1	
	FIBER MUX #2	
7	AIRSCALE #2	
8		
9		
10	FIBER MUX #1	
	FIBER MUX #2	
11	AIRSCALE #3	
12		
13		
14	FIBER MUX #1	
	FIBER MUX #2	
15	FUTURE EQUIPMENT	
16		
17		
18		
19		
20		
21	LEGACY BB #2	
22		
23		
24	LEGACY BB #1	
25		
26		
27	FSEE ON FMAB	

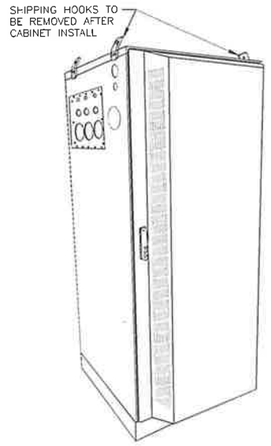

ISOMETRIC

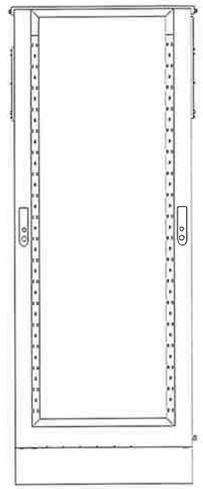
REAR VIEW

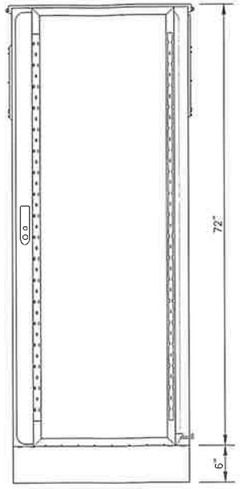

FRONT VIEW

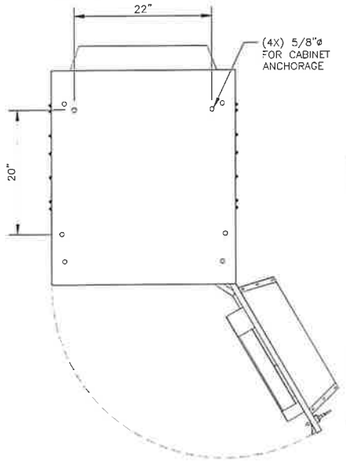

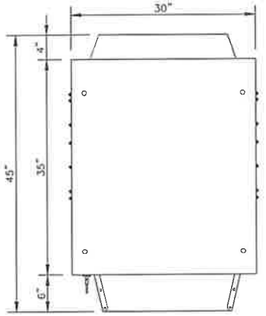

PLAN VIEW

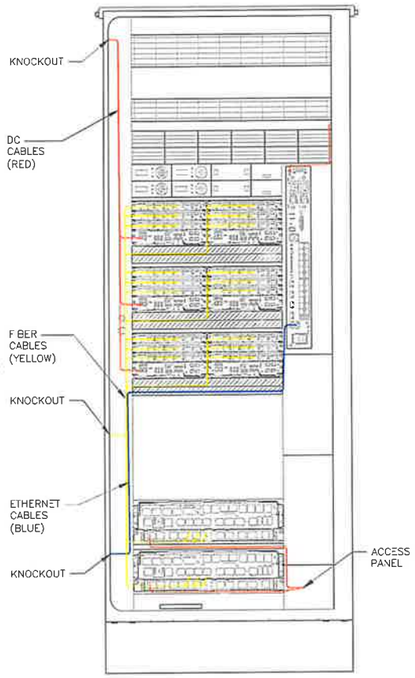

INTERNAL ROUTING

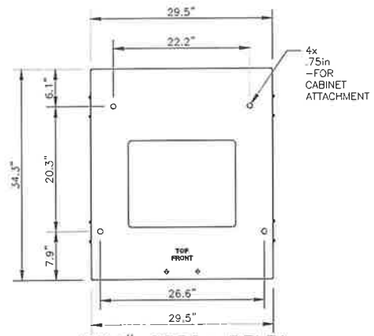

SKU# 33554 DELTA 6IN PLINTH PLAN VIEW

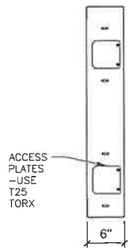

SKU# 33554 DELTA 6IN PLINTH SIDE VIEW

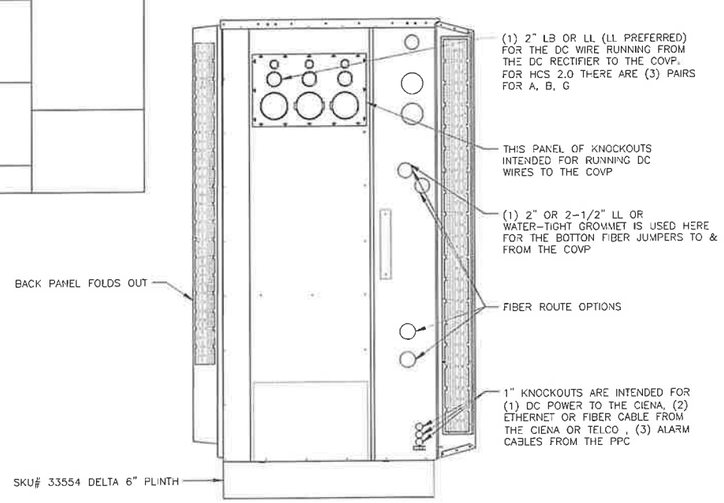

LEFT VIEW

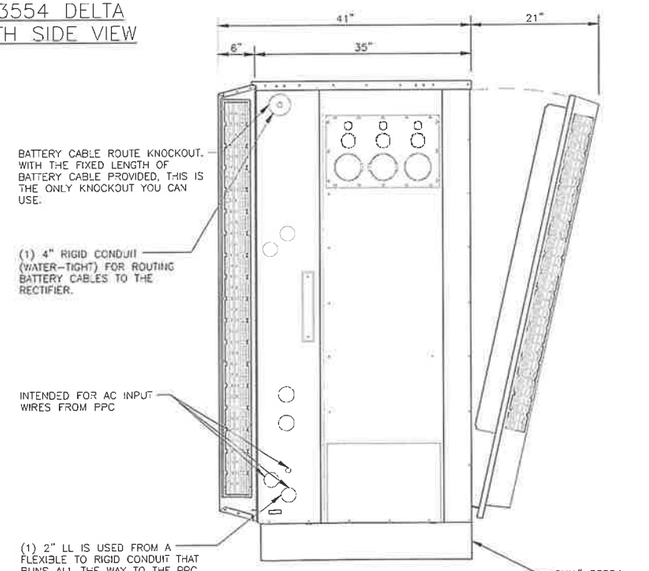

RIGHT VIEW

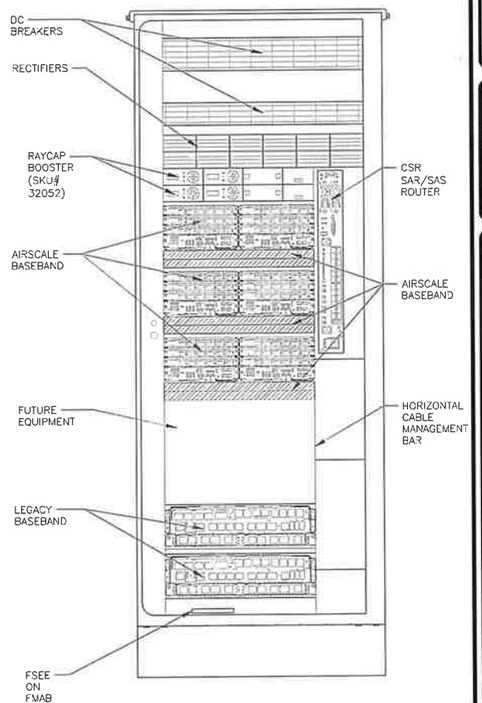

FRONT VIEW (OPEN)

1 DELTA HPL3 SITE SUPPORT CABINET
SCALE: NOT TO SCALE

THESE SPECIFICATIONS WERE PROVIDED BY OTHERS, POD DID NOT PREPARE THESE DETAILS

T-Mobile
8550 W. BRYN MAWR AVE, SUITE 100
CHICAGO, IL 60631

CROWN CASTLE
3025 HIGHLAND PKWY, SUITE 510,
DOWNERS GROVE, IL, 60515

POD
POWER OF DESIGN
11490 BLUEGRASS PKWY
LOUISVILLE, KY 40299
502-437-5252

T-MOBILE SITE NUMBER:
CH80545A

BU #: **875515**
180 ANETS

180 NORTH ANETS DRIVE
NORTHBROOK, IL 60062

EXISTING 100'-0" MONOPOLE

ISSUED FOR:

REV	DATE	DRWN	DESCRIPTION	DES/QA
0	6/21/2023	AS	CONSTRUCTION	MLP

MARK A. PATTERSON
062-067337
LICENSED PROFESSIONAL ENGINEER
STATE OF ILLINOIS
06/21/2023
EXPIRES: 11/30/2023

IT IS A VIOLATION OF LAW FOR ANY PERSON, UNLESS THEY ARE ACTING UNDER THE DIRECTION OF A LICENSED PROFESSIONAL ENGINEER, TO ALTER THIS DOCUMENT.

SHEET NUMBER: C-7
REVISION: 0

DigiSigner Document ID: d0dff10a-7ace-48fd-85bf-5ed21f60df6e

MANUFACTURER:	DELTA
MODEL:	LB3 BATTERY SUPPORT CABINET
DIMENSIONS:	72" x 30" x 35" (H x W x D)
WEIGHT:	509 LBS (WITHOUT EQUIPMENT)

NOTE:
- CORRECT KNOCKOUT TOOL REQUIRED FOR PUNCHING KNOCKOUTS. DO NOT DRILL THROUGH KNOCKOUTS
- CONDUIT MUST BE PROPERLY SECURED TO PREVENT DAMAGE TO CABINETS AND/OR CABLING

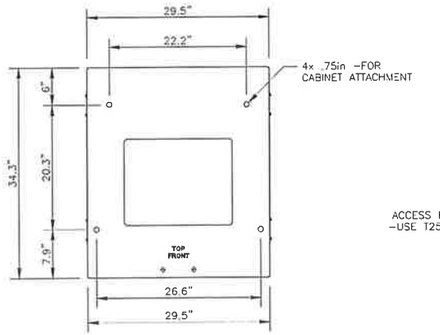

SKU# 33554 DELTA 6in PLINTH PLAN VIEW

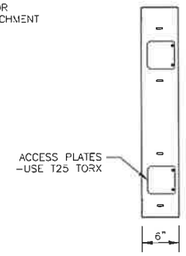

SKU# 33554 DELTA 6IN PLINTH SIDE VIEW

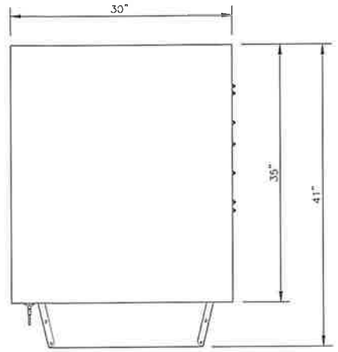

PLAN VIEW

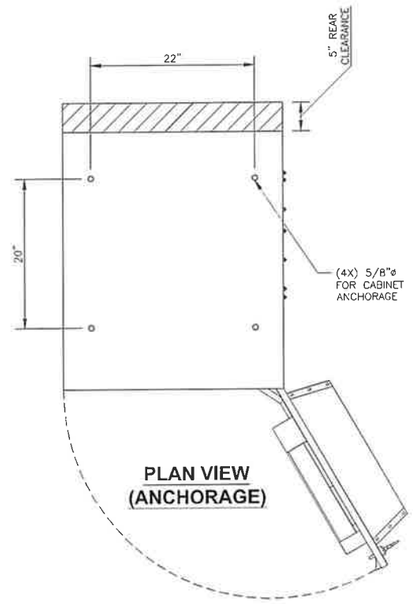

PLAN VIEW (ANCHORAGE)

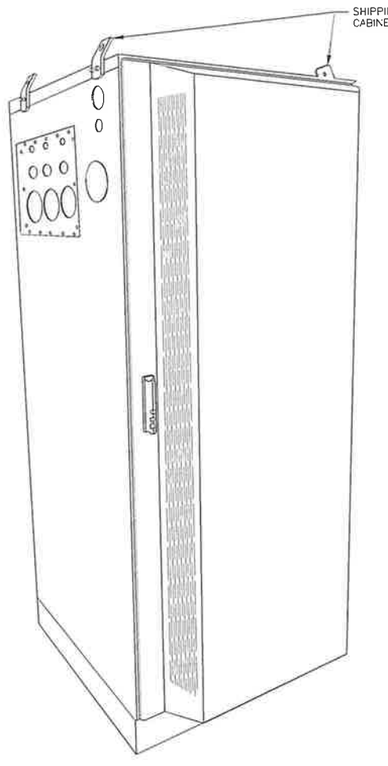

ISO VIEW N.T.S.

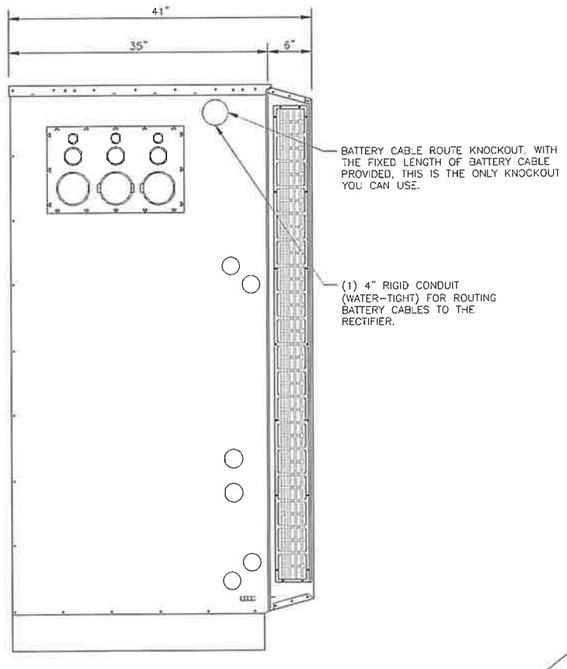

LEFT VIEW

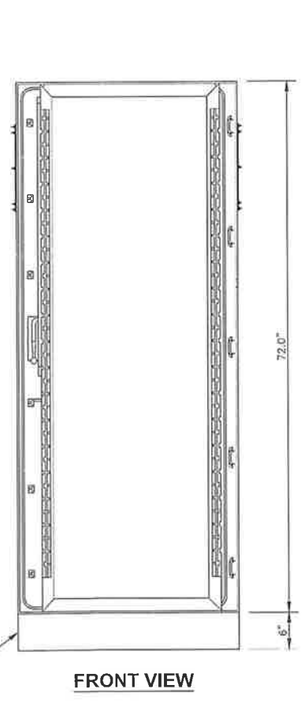

FRONT VIEW

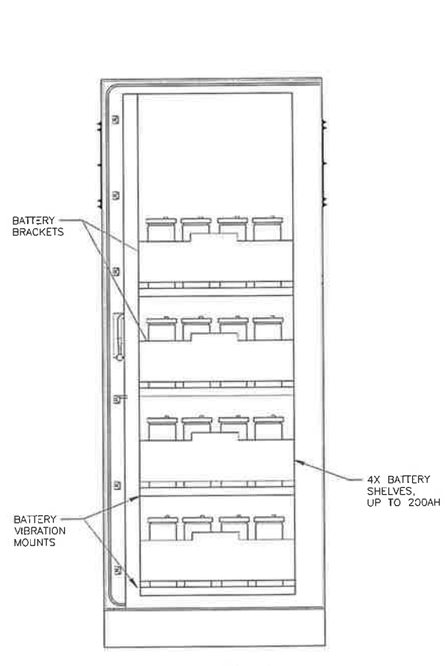

FRONT VIEW (OPEN)

1 LB3 DELTA BATTERY SUPPORT CABINET
SCALE: NOT TO SCALE

THESE SPECIFICATIONS WERE PROVIDED BY OTHERS, POD DID NOT PREPARE THESE DETAILS

T-Mobile
8550 W. BRYN MAWR AVE, SUITE 100
CHICAGO, IL 60631

CROWN CASTLE
3025 HIGHLAND PKWY, SUITE 510,
DOWNERS GROVE, IL, 60515

POD
POWER OF DESIGN
11490 BLUEGRASS PKWY
LOUISVILLE, KY 40299
502-437-5252

T-MOBILE SITE NUMBER:
CH80545A

BU #: **875515**
180 ANETS

180 NORTH ANETS DRIVE
NORTHBROOK, IL 60062

EXISTING 100'-0" MONOPOLE

ISSUED FOR:

REV	DATE	DRWN	DESCRIPTION	DES /QA
0	6/21/2023	AS	CONSTRUCTION	MEP

MARK E. PATTERSON
062-067337
LICENSED PROFESSIONAL ENGINEER
STATE OF ILLINOIS
06/21/2023
EXPIRES: 11/30/2023

IT IS A VIOLATION OF LAW FOR ANY PERSON, UNLESS THEY ARE ACTING UNDER THE DIRECTION OF A LICENSED PROFESSIONAL ENGINEER, TO ALTER THIS DOCUMENT.

SHEET NUMBER: C-8
REVISION: 0

DigiSigner Document ID: d0dff40a-7aee-48fd-85bf-5ed21f60df6e

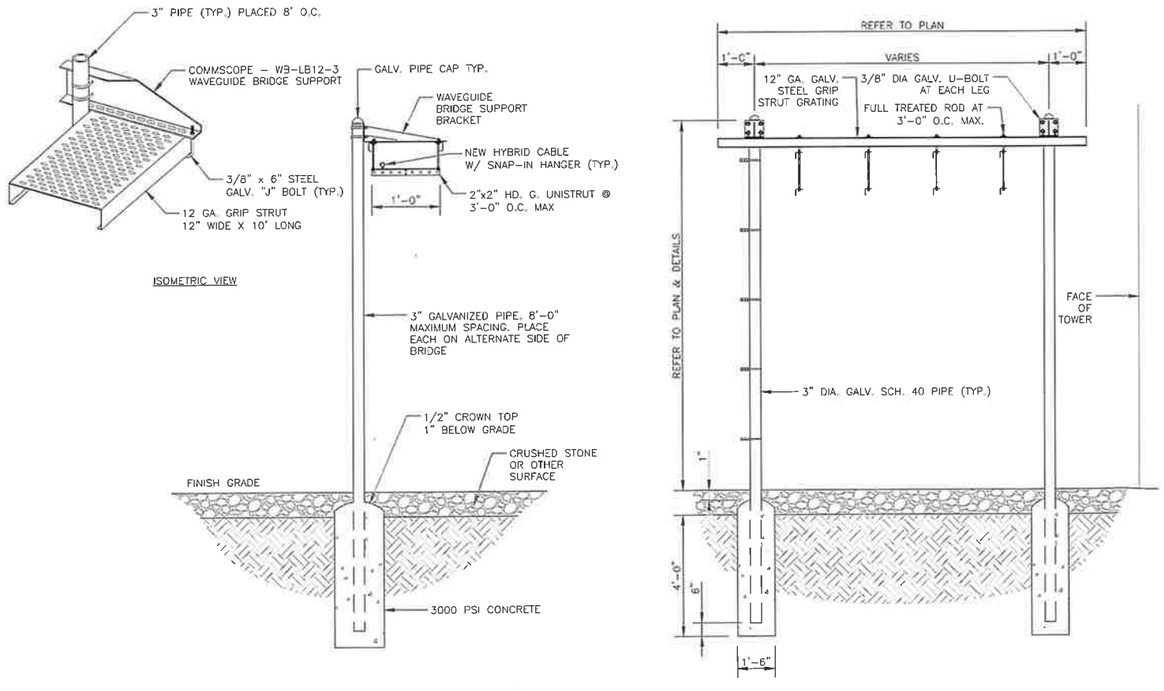

1 ICE BRIDGE DETAIL
SCALE: NOT TO SCALE

2 NOT USED
SCALE: NOT TO SCALE

T-Mobile

8550 W. BRYN MAWR AVE, SUITE 100
CHICAGO, IL 60631

CROWN CASTLE

3025 HIGHLAND PKWY, SUITE 510,
DOWNERS GROVE, IL, 60515

POD
POWER OF DESIGN

11490 BLUEGRASS PKWY
LOUISVILLE, KY 40299
502-437-5252

T-MOBILE SITE NUMBER:
CH80545A

BU #: **875515**
180 ANETS

180 NORTH ANETS DRIVE
NORTHBROOK, IL 60062

EXISTING 100'-0" MONOPOLE

ISSUED FOR:

REV	DATE	DRWN	DESCRIPTION	DES./QA
0	6/21/2023	AS	CONSTRUCTION	MEP

MARK A. PATTERSON
062-067337
LICENSED PROFESSIONAL ENGINEER
STATE OF ILLINOIS
06/21/2023
EXPIRES: 11/30/2023

IT IS A VIOLATION OF LAW FOR ANY PERSON, UNLESS THEY ARE ACTING UNDER THE DIRECTION OF A LICENSED PROFESSIONAL ENGINEER, TO ALTER THIS DOCUMENT.

SHEET NUMBER: C-9
REVISION: 0

DigiSigner Document ID: d0dff10a-7aee-48fd-85bf-5ed21f60df6e

T-MOBILE PANEL SCHEDULE

MAIN: 200 AMP MAIN BREAKER			**VOLTAGE/PHASE:** 120/240V, 1-PHASE, 3-WIRE						**SHORT CIRCUIT CURRENT RATING:** N/A		
MOUNTING: INSIDE PPC ENCLOSURE			**ENCLOSURE:** NEMA 3R						**SURGE PROTECTION DEVICE:** YES		
DESCRIPTION	LOAD (VA)	C or NC	C/B	CIR No.	LOAD (VA) A-PHASE	LOAD (VA) B-PHASE	CIR No.	C/B	C or NC	LOAD (VA)	DESCRIPTION
2.5 GROWTH	4800	C	100	1	4830		2	60	C	30	SURGE PROTECTION DEVICE
	4800	C		3		4830	4		C	30	
MMBS BATT	720	C	15	5	5520		6	100	C	4800	MMBS
	720	C		7		5520	8		C	4800	
FAN	60	C	10	9	240		10	15	C	180	GFCI
CIENA	720	C	15	11		720	12				
BASE LOAD (VA) =					10590	11070	C = CONTINUOUS LOAD; NC = NON-CONTINUOUS LOAD				
25% OF CONTINUOUS LOAD (VA) =					2648	2768	** INDICATES NEW LOAD. ALL OTHER LOADS ARE EXISTING. NEW BREAKER TO BE SAME TYPE AND HAVE SAME AIC RATING AS EXISTING. CUSTOMER HAS NOT PROVIDED LOADS SHOWN ARE ESTIMATED VALUES				
TOTAL LOAD (VA) =					13238	13838					
TOTAL LOAD (A) =					111	116					

1 EXISTING PANEL SCHEDULE
SCALE: NOT TO SCALE

T-MOBILE PANEL SCHEDULE

MAIN: 200 AMP MAIN BREAKER			**VOLTAGE/PHASE:** 120/240V, 1-PHASE, 3-WIRE						**SHORT CIRCUIT CURRENT RATING:** N/A		
MOUNTING: INSIDE PPC ENCLOSURE			**ENCLOSURE:** NEMA 3R						**SURGE PROTECTION DEVICE:** YES		
DESCRIPTION	LOAD (VA)	C or NC	C/B	CIR No.	LOAD (VA) A-PHASE	LOAD (VA) B-PHASE	CIR No.	C/B	C or NC	LOAD (VA)	DESCRIPTION
2.5 GROWTH	4800	C	100	1	4830		2	60	C	30	SURGE PROTECTION DEVICE
	4800	C		3		4830	4		C	30	
MMBS BATT	720	C	15	5	5520		6	100	C	4800	MMBS
	720	C		7		5520	8		C	4800	
FAN	60	C	10	9	240		10	15	C	180	GFCI
CIENA	720	C	15	11		11720	12	200	C	11000	**DELTA SSC CABINET
				13	11180		14		C	11180	
				15		0	16		C		
				17	0		18		C		
				19		0	20				
				21	0		22				
				23		0	24				
BASE LOAD (VA) =					21770	22070	C = CONTINUOUS LOAD; NC = NON-CONTINUOUS LOAD				
25% OF CONTINUOUS LOAD (VA) =					5443	5518	** INDICATES NEW LOAD. ALL OTHER LOADS ARE EXISTING. NEW BREAKER TO BE SAME TYPE AND HAVE SAME AIC RATING AS EXISTING. CUSTOMER HAS NOT PROVIDED LOADS SHOWN ARE ESTIMATED VALUES				
TOTAL LOAD (VA) =					27213	27588					
TOTAL LOAD (A) =					227	230					

2 FINAL PANEL SCHEDULE
SCALE: NOT TO SCALE

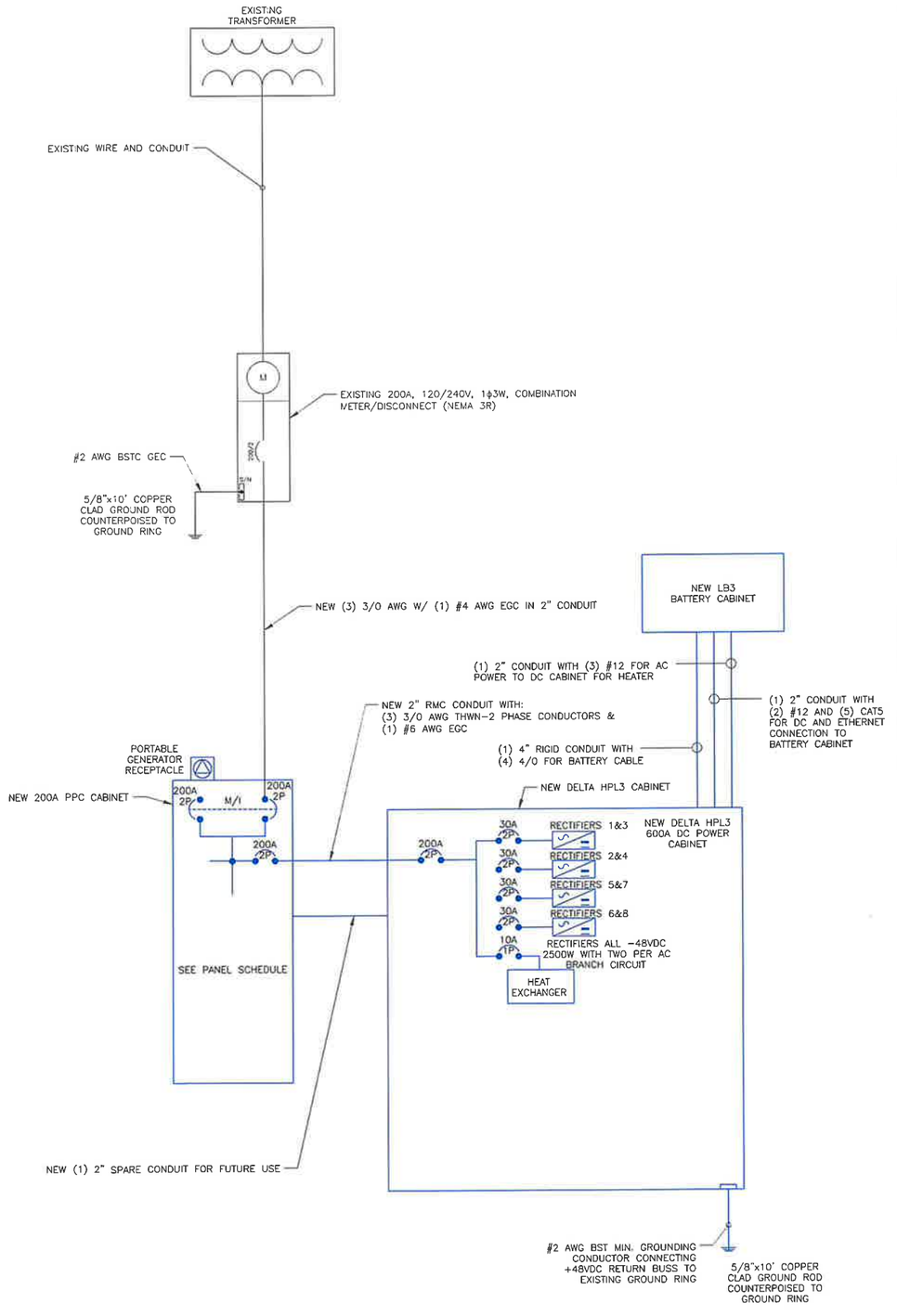

3 ONE-LINE DIAGRAM
SCALE: NOT TO SCALE

T-Mobile
8550 W. BRYN MAWR AVE, SUITE 100
CHICAGO, IL 60631

CROWN CASTLE
3025 HIGHLAND PKWY, SUITE 510,
DOWNERS GROVE, IL, 60515

POD
POWER OF DESIGN
11490 BLUEGRASS PKWY
LOUISVILLE, KY 40299
502-437-5252

T-MOBILE SITE NUMBER:
CH80545A

BU #: **875515**
180 ANETS

180 NORTH ANETS DRIVE
NORTHBROOK, IL 60062

EXISTING 100'-0" MONOPOLE

ISSUED FOR:

REV	DATE	DRWN	DESCRIPTION	DES/QA
0	6/21/2023	AS	CONSTRUCTION	MEP

MARK PATTERSON
062-067337
LICENSED PROFESSIONAL ENGINEER
STATE OF ILLINOIS
06/21/2023
EXPIRES: 11/30/2023

IT IS A VIOLATION OF LAW FOR ANY PERSON, UNLESS THEY ARE ACTING UNDER THE DIRECTION OF A LICENSED PROFESSIONAL ENGINEER, TO ALTER THIS DOCUMENT.

SHEET NUMBER: E-1
REVISION: 0

DigiSigner Document ID: d0dff40a-7ace-48fd-85bf-5ed21f60df6e

INSTALLER NOTES:

ALL METAL CONDUIT INSTALLED IN DIRECT CONTACT WITH THE EARTH SHALL BE CONSIDERED TO BE INSTALLED IN A SEVERELY CORROSIVE ENVIRONMENT AND IS REQUIRED TO HAVE SUPPLEMENTAL PROTECTION AGAINST CORROSION (NEC ARTICLE 342.10(B) & 344.10(B)(1)). THIS PROTECTION SHALL EITHER BE AN APPROVED MANUFACTURER INSTALLED PROTECTIVE COATING ON THE CONDUIT OR SHALL BE (2) LAYERS OF 10 MIL PVC PIPE WRAP TAPE INSTALLED USING OPPOSING SPIRAL WRAPS. ON VERTICAL PIPE THE OUTSIDE LAYER OF TAPE SHALL BE WRAPPED SO AS TO PROVIDE SHEDDING OF WATER (i.e. TAPE SHOULD WRAP IN AN UPWARD DIRECTION WITH LOWER WRAP BEING BENEATH THE WRAP ABOVE). SPIRAL WRAPS SHALL HAVE A MINIMUM OF 1/4" OVERLAP WITH THE PRECEDING TAPE WRAP. ANY OTHER METHODS OF CORROSION PROTECTION SHALL REQUIRE APPROVAL BY THE ENGINEER OF RECORD PRIOR TO BEING USED.

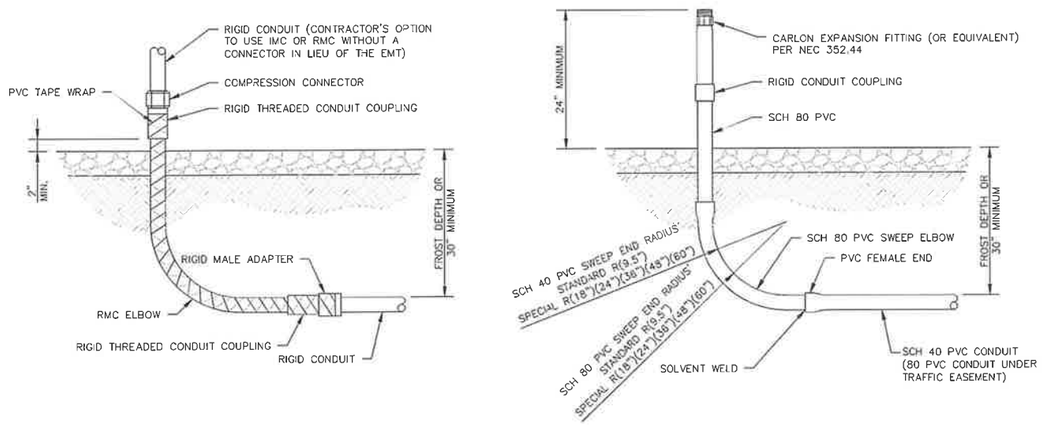

1 CONDUIT STUB UP DETAILS
SCALE: NOT TO SCALE

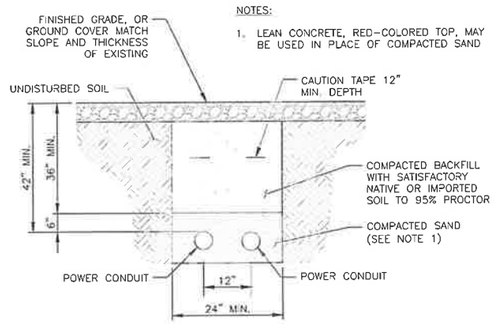

2 TRENCH DETAIL
SCALE: NOT TO SCALE

T-Mobile
8550 W. BRYN MAWR AVE, SUITE 100
CHICAGO, IL 60631

CROWN CASTLE
3025 HIGHLAND PKWY, SUITE 510,
DOWNERS GROVE, IL, 60515

POD
POWER OF DESIGN
11490 BLUEGRASS PKWY
LOUISVILLE, KY 40299
502-437-5252

T-MOBILE SITE NUMBER:
CH80545A

BU #: **875515**
180 ANETS

180 NORTH ANETS DRIVE
NORTHBROOK, IL 60062

EXISTING 100'-0" MONOPOLE

ISSUED FOR:

REV	DATE	DRWN	DESCRIPTION	DES/QA
0	6/21/2023	AS	CONSTRUCTION	MEP

MARK PATTERSON
062-067337
LICENSED PROFESSIONAL ENGINEER
STATE OF ILLINOIS
06/21/2023
EXPIRIES: 11/30/2023

IT IS A VIOLATION OF LAW FOR ANY PERSON, UNLESS THEY ARE ACTING UNDER THE DIRECTION OF A LICENSED PROFESSIONAL ENGINEER, TO ALTER THIS DOCUMENT.

SHEET NUMBER: E-2
REVISION: 0

DigiSigner Document ID: d0dff40a-7ace-48fd-85bf-5ed21f60df6e

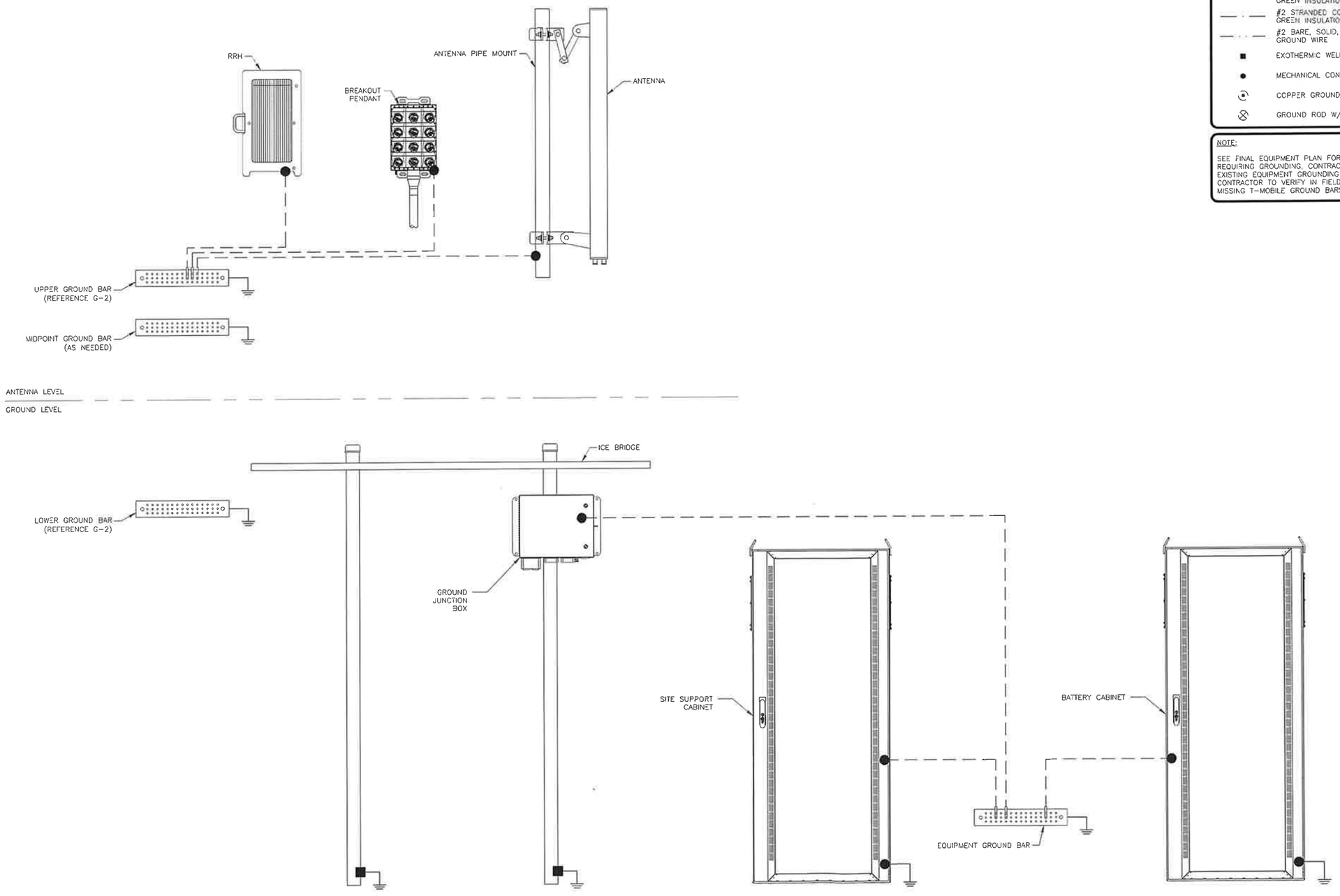

1 TYPICAL FINAL GROUNDING SCHEMATIC
SCALE: NOT TO SCALE

GROUNDING PLAN LEGEND:

- #6 STRANDED COPPER WITH GREEN INSULATION GROUND WIRE
- #2 STRANDED COPPER WITH GREEN INSULATION GROUND WIRE
- #2 BARE, SOLID, TINNED COPPER GROUND WIRE
- EXOTHERMIC WELD
- MECHANICAL CONNECTION
- COPPER GROUND ROD
- GROUND ROD W/ TEST WELL

NOTE:

SEE FINAL EQUIPMENT PLAN FOR NEW EQUIPMENT REQUIRING GROUNDING. CONTRACTOR TO VERIFY EXISTING EQUIPMENT GROUNDING IN FIELD. CONTRACTOR TO VERIFY IN FIELD AND INSTALL ANY MISSING T-MOBILE GROUND BARS ON SITE.

T-Mobile
8550 W. BRYN MAWR AVE, SUITE 100
CHICAGO, IL 60631

CROWN CASTLE
3025 HIGHLAND PKWY, SUITE 510,
DOWNERS GROVE, IL, 60515

POD
POWER OF DESIGN
11490 BLUEGRASS PKWY
LOUISVILLE, KY 40299
502-437-5252

T-MOBILE SITE NUMBER:
CH80545A

BU #: **875515**
180 ANETS

180 NORTH ANETS DRIVE
NORTHBROOK, IL 60062

EXISTING 100'-0" MONOPOLE

ISSUED FOR:

REV	DATE	DRWN	DESCRIPTION	DES /QA
0	6/21/2023	AS	CONSTRUCTION	MEP

MARK PATTERSON
062-067337
LICENSED PROFESSIONAL ENGINEER
STATE OF ILLINOIS
06/21/2023
EXPIRES: 11/30/2023

IT IS A VIOLATION OF LAW FOR ANY PERSON, UNLESS THEY ARE ACTING UNDER THE DIRECTION OF A LICENSED PROFESSIONAL ENGINEER, TO ALTER THIS DOCUMENT.

SHEET NUMBER:	REVISION:
G-1	0

DigiSigner Document ID: d0dff40a-7aae-48fd-85bf-5ad21f60df6e

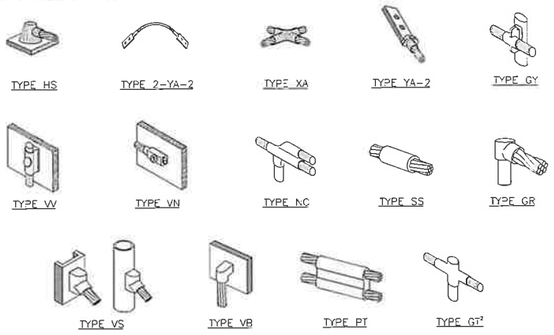

NOTE:

1. ERICO EXOTHERMIC "MOLD TYPES" SHOWN HERE ARE EXAMPLES. CONSULT WITH CONSTRUCTION MANAGER FOR SPECIFIC MOLDS TO BE USED FOR THIS PROJECT.
2. MOLD TYPE ONLY TO BE USED BELOW GRADE WHEN CONNECTING GROUND RING TO GROUND ROD.

1 CADWELD GROUNDING CONNECTIONS
SCALE: NOT TO SCALE

WIRE SIZE	BURNDY LUG	BOLT SIZE
#6 AWG GREEN INSULATED	YA6C-2TC38	3/8" - 16 NC S 2 BOLT
#2 AWG SOLID TINNED	YA3C-2TC38	3/8" - 16 NC S 2 BOLT
#2 AWG STRANDED	YA2C-2TC38	3/8" - 16 NC S 2 BOLT
#2/0 AWG STRANDED	YA26-2TC38	3/8" - 16 NC S 2 BOLT
#4/0 AWG STRANDED	YA28-2N	1/2" - 16 NC S 2 BOLT

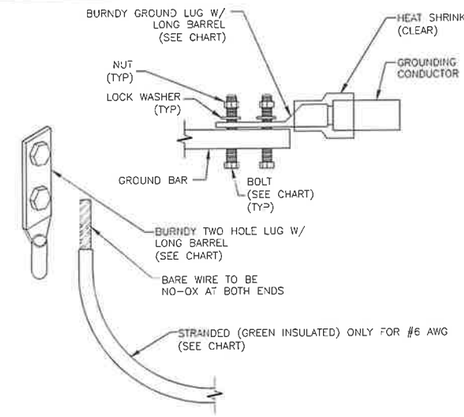

NOTES:

1. ALL GROUNDING LUGS ARE TO BE INSTALLED PER MANUFACTURER'S SPECIFICATIONS. ALL HARDWARE BOLTS, NUTS, LOCK WASHERS SHALL BE STAINLESS STEEL. ALL HARDWARE ARE TO BE AS FOLLOWS: BOLT, FLAT WASHER,GROUND BAR, GROUND LUG, FLAT WASHER AND NUT.

2 MECHANICAL LUG CONNECTION
SCALE: NOT TO SCALE

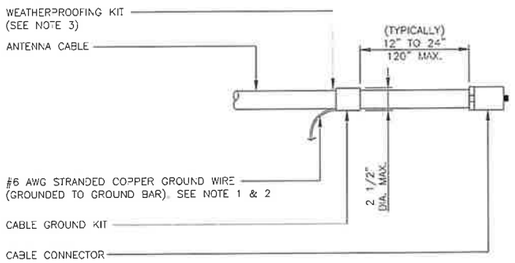

NOTES:

1. DO NOT INSTALL CABLE GROUND KIT AT A BEND AND ALWAYS DIRECT GROUND WIRE DOWN TO GROUND BAR.
2. GROUNDING KIT SHALL BE TYPE AND PART NUMBER AS SUPPLIED OR RECOMMENDED BY CABLE MANUFACTURER.
3. WEATHER PROOFING SHALL BE TWO-PART TAPE KIT. COLD SHRINK SHALL NOT BE USED.

3 CABLE GROUND KIT CONNECTION
SCALE: NOT TO SCALE

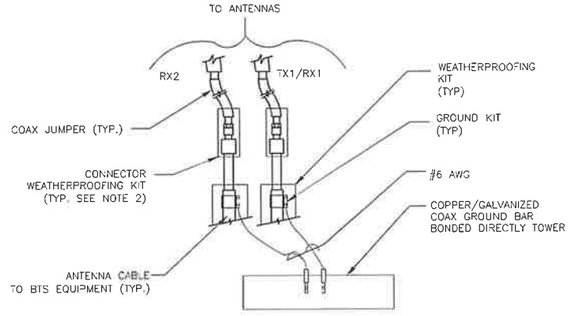

NOTES:

1. DO NOT INSTALL CABLE GROUND KIT AT A BEND AND ALWAYS DIRECT GROUND WIRE DOWN TO ANTENNA GROUND BAR.
2. WEATHER PROOFING SHALL BE TWO-PART TAPE KIT. COLD SHRINK SHALL NOT BE USED.

4 GROUND CABLE CONNECTION
SCALE: NOT TO SCALE

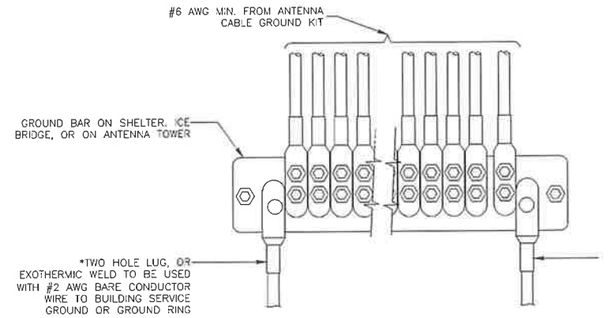

5 GROUNDWIRE INSTALLATION
SCALE: NOT TO SCALE

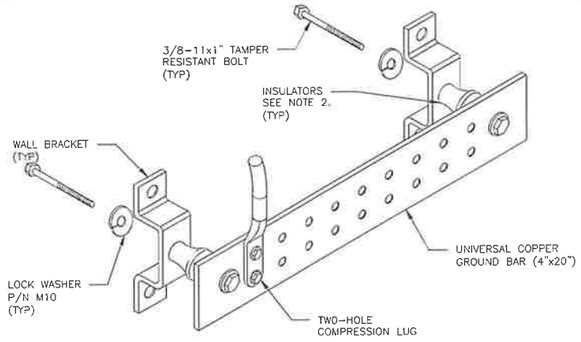

NOTES:

1. DOWN LEAD (HOME RUN) CONDUCTORS ARE NOT TO BE INSTALLED ON CROWN CASTLE USA INC. TOWER, PER THE GROUNDING DOWN CONDUCTOR POLICY GAS-STD-10091. NO MODIFICATION OR DRILLING TO TOWER STEEL IS ALLOWED IN ANY FORM OR FASHION, CAD-WELDING ON THE TOWER AND/OR IN THE AIR ARE NOT PERMITTED.
2. OMIT INSULATOR WHEN MOUNTING TO TOWER STEEL OR PLATFORM STEEL USE INSULATORS WHEN ATTACHING TO BUILDING OR SHELTERS.

6 GROUND BAR DETAIL
SCALE: NOT TO SCALE

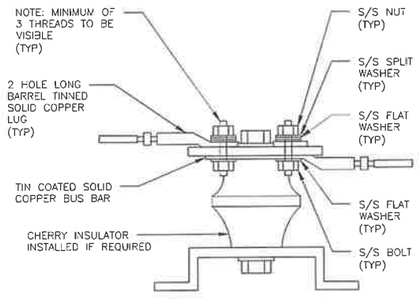

7 LUG DETAIL
SCALE: NOT TO SCALE

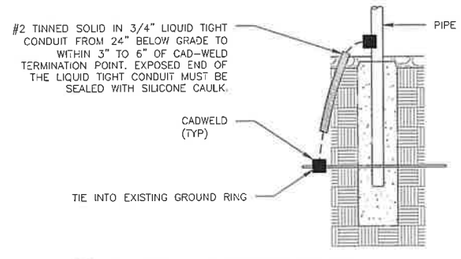

8 TRANSITIONING GROUND DETAIL
SCALE: NOT TO SCALE

T-Mobile
8550 W. BRYN MAWR AVE, SUITE 100
CHICAGO, IL 60631

CROWN CASTLE
3025 HIGHLAND PKWY, SUITE 510,
DOWNERS GROVE, IL, 60515

POD
POWER OF DESIGN
11490 BLUEGRASS PKWY
LOUISVILLE, KY 40299
502-437-5252

T-MOBILE SITE NUMBER:
CH80545A

BU #: **875515**
180 ANETS

180 NORTH ANETS DRIVE
NORTHBROOK, IL 60062

EXISTING 100'-0" MONOPOLE

ISSUED FOR:

REV	DATE	DRWN	DESCRIPTION	DES /QA
0	6/21/2023	AS	CONSTRUCTION	MEP

MARK PATTERSON
062-067337
LICENSED PROFESSIONAL ENGINEER
STATE OF ILLINOIS
06/21/2023
EXPIRES: 11/30/2023

IT IS A VIOLATION OF LAW FOR ANY PERSON, UNLESS THEY ARE ACTING UNDER THE DIRECTION OF A LICENSED PROFESSIONAL ENGINEER, TO ALTER THIS DOCUMENT.

SHEET NUMBER: G-2
REVISION: 0

DigiSigner Document ID: d9dff40a-7aee-48fd-85bf-5cd21f60df6e

PV-LPPGS
MONOPOLE GUARDIAN MOUNT

SEE SHEET 2 - TABLE 1 FOR FULL CONFIGURATION DETAILS

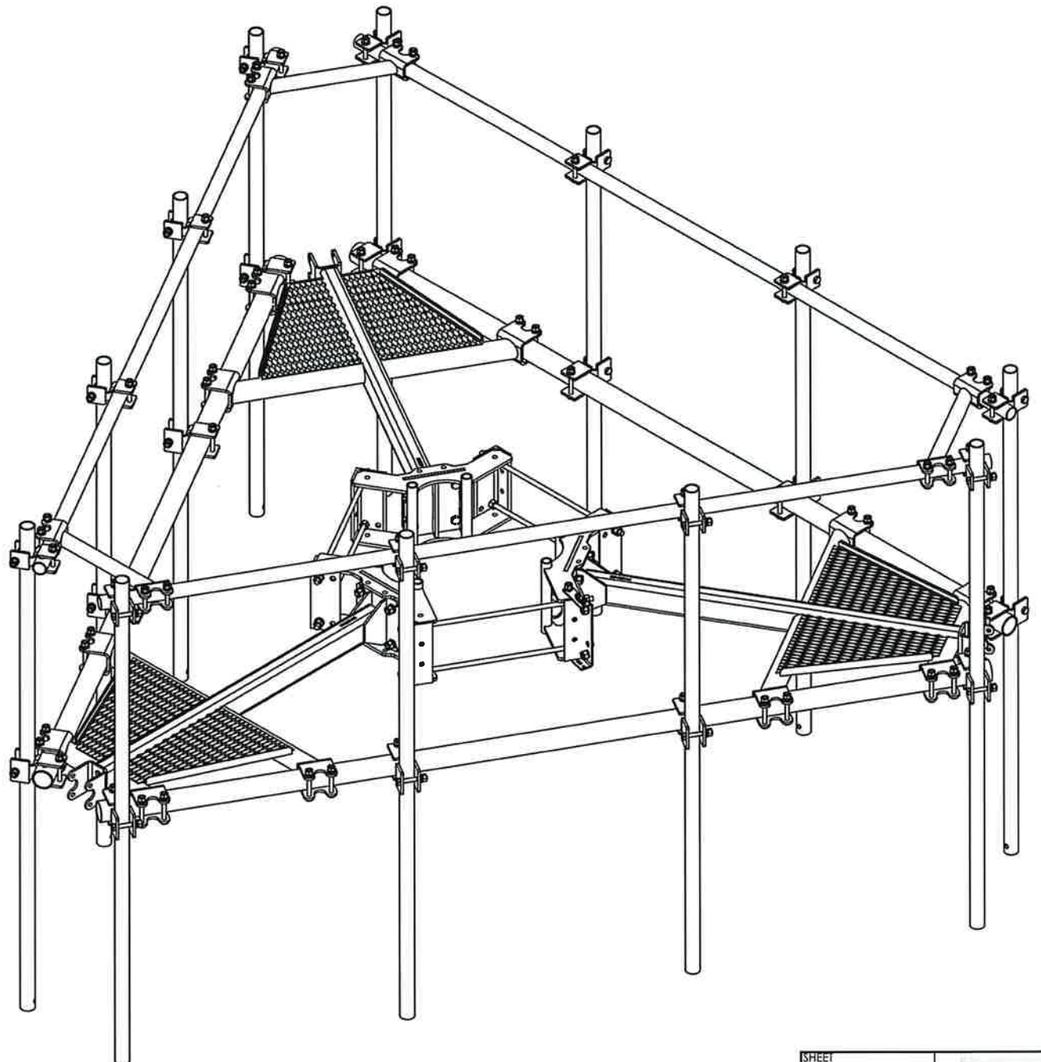

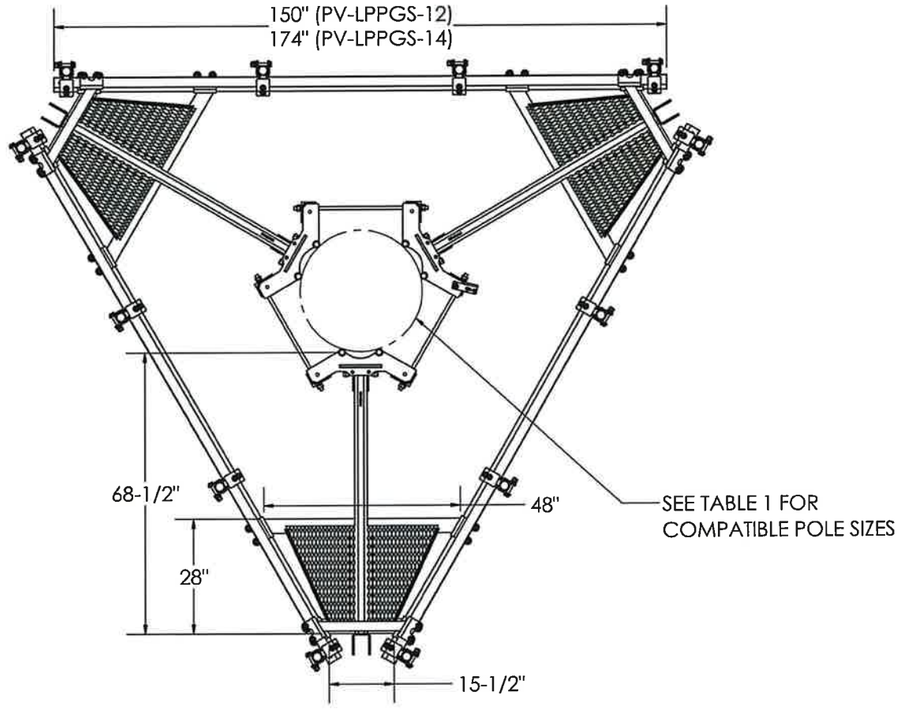

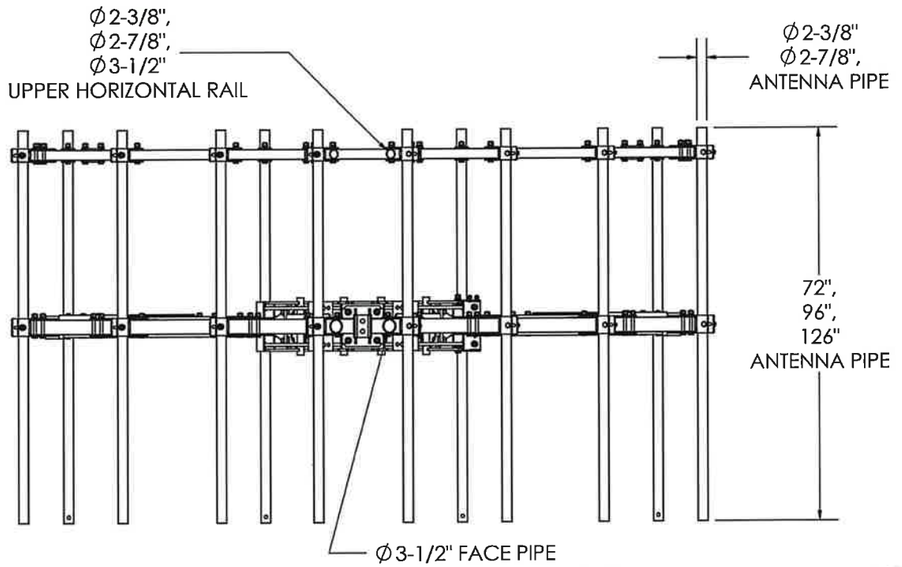

SHEET 1 OF 16	CATEGORY 02_Monopole	9	ACC1 REPLACE ACC2, PV-CMX-CG-BO REPLACE 115-242	3/16/21	PERFECTVISION
4/27/2021 SCALE 1:36	SERIES 01_Triangular	8	KKGS UPDATE	2/2/21	
DIMENSIONS ARE IN INCHES TOLERANCES U.N.O. HOLES: +1/16", -1/32" ANGULAR: PROFILE±1/4°, BEND±2° ALL OTHERS: ±1/16"	TYPE PV-LPPGS_GUARDIAN	7	REPLACED PKBK WITH PV-KKRS	11/11/20	MONOPOLE GUARDIAN MOUNT
	BY DJN	6	ADDED ALL THREAD NOTE TO COLLARS	7/27/20	DOCUMENT NUMBER LPPGS-ENG-01-R9
	CHECKED SJS	5	ADDED HR2-AP3 CONFIGS	1/20/20	REV 9
	STATUS APPROVED	REV	DESCRIPTION	DATE	

C:\PVWSteel\Catalog\SW Working Files\Engineering Details\

PROPRIETARY AND CONFIDENTIAL THE INFORMATION CONTAINED IN THIS DRAWING IS THE SOLE PROPERTY OF PERFECTVISION. ANY REPRODUCTION IN PART OR AS A WHOLE WITHOUT THE WRITTEN PERMISSION OF PERFECTVISION IS PROHIBITED.

DigiSigner Document ID: d9dff40a-7aee-48fd-85bf-5cd21f60df6e

PART NUMBERS, WEIGHTS, & EPA

Table 1: Configurations

Part Number	Description	Weight (lbs)	(EPA)A (ft2)*	(EPA)A 1/2" Radial Ice (ft2)*	Included Parts																												
					PV-RM1045-GS	PV-RM3060-GS	PV-LPP-GS-B	PV--LPP-GS-EXT	PV-LPP-GS-HK	PV-LPP-GS-HR238	PV-LPP-GS-HR278	PV-LPP-GS-HR312	PV-LPP-GS-TKB	PV-XP-DC-2020	PV-XP-DC-2025	PV-XP-DC-2030	PV-XP-DC-2525	PV-XP-DC-2530	PIPE-238X96	PIPE-238X150	PIPE-238X174	PIPE-278X96	PIPE-278X126	PIPE-278X150	PIPE-278X174	PIPE-312X150	PIPE-312X174	PV-SCRB-RMGS	PV-CMX-CG-BO	PV-LPP-GS-ACC2
PV-LPPGS-12M-B†	12'6" Face, 10"-40" OD Pole	1210	13.9	18.1	1	-	1	-	1	-	-	-	-	-	-	-	-	-	-	-	-	-	-	-	-	3	-	1	1	3
PV-LPPGS-14M-B†	14'6" Face, 13"-44" OD Pole	1480	16.7	21.4	1	-	1	1	1	-	-	-	-	-	-	-	-	-	-	-	-	-	-	-	-	-	3	1	1	3
PV-LPPGS-14L-B†	14'6" Face, 35"-60" OD Pole	1495	14.8	19.3	-	1	1	-	1	-	-	-	-	-	-	-	-	-	-	-	-	-	-	-	-	-	3	1	1	3
PV-LPPGS-12M-HR2-B	12'6" Face, 10"-40" OD Pole, 2-3/8" OD Horizontal Rail, No Antenna Pipe	1400	18.5	25.0	1	-	1	-	1	1	-	-	-	-	-	-	-	-	-	3	-	-	-	-	-	3	-	1	1	3
PV-LPPGS-12M-HR25-B	12'6" Face, 10"-40" OD Pole, 2-7/8" OD Horizontal Rail, No Antenna Pipe	1495	19.4	25.9	1	-	1	-	1	-	1	-	-	-	-	-	-	-	-	-	-	-	-	3	-	3	-	1	1	3
PV-LPPGS-12M-HR3-B	12'6" Face, 10"-40" OD Pole, 3-1/2" OD Horizontal Rail, No Antenna Pipe	1575	20.6	27.1	1	-	1	-	1	-	-	1	-	-	-	-	-	-	-	-	-	-	-	-	-	6	-	1	1	3
PV-LPPGS-14M-HR2-B	14'6" Face, 13"-44" OD Pole, 2-3/8" OD Horizontal Rail, No Antenna Pipe	1695	22.0	29.2	1	-	1	1	1	1	-	-	-	-	-	-	-	-	-	-	3	-	-	-	-	-	3	1	1	3
PV-LPPGS-14M-HR25-B	14'6" Face, 13"-44" OD Pole, 2-7/8" OD Horizontal Rail, No Antenna Pipe	1800	23.0	30.3	1	-	1	1	1	-	1	-	-	-	-	-	-	-	-	-	-	-	-	-	3	-	3	1	1	3
PV-LPPGS-14M-HR3-B	14'6" Face, 13"-44" OD Pole, 3-1/2" OD Horizontal Rail, No Antenna Pipe	1895	24.4	31.6	1	-	1	1	1	-	-	1	-	-	-	-	-	-	-	-	-	-	-	-	-	6	1	1	3
PV-LPPGS-14L-HR2-B	14'6" Face, 35"-60" OD Pole, 2-3/8" OD Horizontal Rail, No Antenna Pipe	1710	20.0	27.1	-	1	1	-	1	1	-	-	-	-	-	-	-	-	-	3	-	-	-	-	-	3	1	1	3
PV-LPPGS-14L-HR25-B	14'6" Face, 35"-60" OD Pole, 2-7/8" OD Horizontal Rail, No Antenna Pipe	1820	21.1	28.2	-	1	1	-	1	-	1	-	-	-	-	-	-	-	-	-	-	-	-	-	3	-	3	1	1	3
PV-LPPGS-14L-HR3-B	14'6" Face, 35"-60" OD Pole, 3-1/2" OD Horizontal Rail, No Antenna Pipe	1910	22.5	29.5	-	1	1	-	1	-	-	1	-	-	-	-	-	-	-	-	-	-	-	-	-	6	1	1	3
PV-LPPGS-12M-HR2-AP1	12'6" Face, 10"-40" OD Pole, 2-3/8" OD Horizontal Rail, (12) 2-3/8" x 96" Pipe	1925	19.0	25.6	1	-	1	-	1	1	-	-	-	12	-	12	-	-	12	3	-	-	-	-	-	3	-	1	1	3
PV-LPPGS-12M-HR25-AP1	12'6" Face, 10"-40" OD Pole, 2-7/8" OD Horizontal Rail, (12) 2-3/8" x 96" Pipe	2030	19.9	26.5	1	-	1	-	1	-	1	-	-	-	12	12	-	-	12	-	-	-	-	3	-	3	-	1	1	3
PV-LPPGS-12M-HR3-AP1	12'6" Face, 10"-40" OD Pole, 3-1/2" OD Horizontal Rail, (12) 2-3/8" x 96" Pipe	2120	21.0	27.7	1	-	1	-	1	-	-	1	-	-	-	24	-	-	12	-	-	-	-	-	-	6	-	1	1	3
PV-LPPGS-14M-HR2-AP1	14'6" Face, 13"-44" OD Pole, 2-3/8" OD Horizontal Rail, (12) 2-3/8" x 96" Pipe	2215	22.5	29.8	1	-	1	1	1	1	-	-	-	12	-	12	-	-	12	-	3	-	-	-	-	-	3	1	1	3
PV-LPPGS-14M-HR25-AP1	14'6" Face, 13"-44" OD Pole, 2-7/8" OD Horizontal Rail, (12) 2-3/8" x 96" Pipe	2335	23.6	30.9	1	-	1	1	1	-	1	-	-	-	12	12	-	-	12	-	-	-	-	3	-	3	1	1	3
PV-LPPGS-14M-HR3-AP1	14'6" Face, 13"-44" OD Pole, 3-1/2" OD Horizontal Rail, (12) 2-3/8" x 96" Pipe	2440	24.9	32.2	1	-	1	1	1	-	-	1	-	-	-	24	-	-	12	-	-	-	-	-	-	6	1	1	3
PV-LPPGS-14L-HR2-AP1	14'6" Face, 35"-60" OD Pole, 2-3/8" OD Horizontal Rail, (12) 2-3/8" x 96" Pipe	2230	20.6	27.7	-	1	1	-	1	1	-	-	-	12	-	12	-	-	12	-	3	-	-	-	-	-	3	1	1	3
PV-LPPGS-14L-HR25-AP1	14'6" Face, 35"-60" OD Pole, 2-7/8" OD Horizontal Rail, (12) 2-3/8" x 96" Pipe	2350	21.6	28.8	-	1	1	-	1	-	1	-	-	-	12	12	-	-	12	-	-	-	-	3	-	3	1	1	3
PV-LPPGS-14L-HR3-AP1	14'6" Face, 35"-60" OD Pole, 3-1/2" OD Horizontal Rail, (12) 2-3/8" x 96" Pipe	2450	23.0	30.1	-	1	1	-	1	-	-	1	-	-	-	24	-	-	12	-	-	-	-	-	-	6	1	1	3
PV-LPPGS-12M-HR2-AP3	12'6" Face, 10"-40" OD Pole, 2-3/8" OD Horizontal Rail, (12) 2-7/8" x 96" Pipe	2155	19.0	25.6	1	-	1	-	1	1	-	-	-	-	12	-	-	12	-	3	-	12	-	-	-	3	-	1	1	3
PV-LPPGS-12M-HR25-AP3	12'6" Face, 10"-40" OD Pole, 2-7/8" OD Horizontal Rail, (12) 2-7/8" x 96" Pipe	2260	19.9	26.5	1	-	1	-	1	-	1	-	-	-	-	-	12	12	-	-	-	12	-	3	-	3	-	1	1	3
PV-LPPGS-12M-HR3-AP3	12'6" Face, 10"-40" OD Pole, 3-1/2" OD Horizontal Rail, (12) 2-7/8" x 96" Pipe	2355	21.0	27.6	1	-	1	-	1	-	-	1	-	-	-	-	-	-	24	-	-	-	12	-	-	-	6	-	1	1	3
PV-LPPGS-14M-HR2-AP3	14'6" Face, 13"-44" OD Pole, 2-3/8" OD Horizontal Rail, (12) 2-7/8" x 96" Pipe	2460	21.0	27.7	1	-	1	1	1	1	-	-	-	12	-	-	12	-	-	3	12	-	-	-	-	-	3	1	1	3
PV-LPPGS-14M-HR25-AP3	14'6" Face, 13"-44" OD Pole, 2-7/8" OD Horizontal Rail, (12) 2-7/8" x 96" Pipe	2565	23.5	30.8	1	-	1	1	1	-	1	-	-	-	-	-	12	12	-	-	-	12	-	-	3	-	3	1	1	3
PV-LPPGS-14M-HR3-AP3	14'6" Face, 13"-44" OD Pole, 3-1/2" OD Horizontal Rail, (12) 2-7/8" x 96" Pipe	2670	24.8	32.2	1	-	1	1	1	-	-	1	-	-	-	-	-	-	24	-	-	-	12	-	-	-	6	1	1	3
PV-LPPGS-14L-HR2-AP3	14'6" Face, 35"-60" OD Pole, 2-3/8" OD Horizontal Rail, (12) 2-7/8" x 96" Pipe	2475	20.6	27.7	-	1	1	-	1	1	-	-	-	12	-	-	12	-	-	3	12	-	-	-	-	-	3	1	1	3
PV-LPPGS-14L-HR25-AP3	14'6" Face, 35"-60" OD Pole, 2-7/8" OD Horizontal Rail, (12) 2-7/8" x 96" Pipe	2580	21.6	28.7	-	1	1	-	1	-	1	-	-	-	-	-	12	12	-	-	-	12	-	-	3	-	3	1	1	3
PV-LPPGS-14L-HR3-AP3	14'6" Face, 35"-60" OD Pole, 3-1/2" OD Horizontal Rail, (12) 2-7/8" x 96" Pipe	2690	22.9	30.1	-	1	1	-	1	-	-	1	-	-	-	-	-	-	24	-	-	-	12	-	-	-	6	1	1	3
PV-LPPGS-12M-TKB3-AP4	12'6" Face, 10"-40" OD Pole, 3-1/2" OD Horizontal Rail with Brace Kit, (12) 2-7/8" x 126" Pipe	3180	27.7	37.3	2	-	1	-	1	-	-	1	1	-	-	-	-	24	-	-	-	-	12	-	-	6	-	2	2	3
PV-LPPGS-14M-TKB3-AP4	14'6" Face, 13"-44"" OD Pole, 3-1/2" OD Horizontal Rail with Brace Kit, (12) 2-7/8" x 126" Pipe	3715	31.5	41.9	2	-	1	2	1	-	-	1	1	-	-	-	-	24	-	-	-	-	12	-	-	-	6	2	2	3
PV-LPPGS-14L-TKB3-AP4	14'6" Face, 35"-60" OD Pole, 3-1/2" OD Horizontal Rail with Brace Kit, (12) 2-7/8" x 126" Pipe	3745	29.5	39.8	-	2	1	-	1	-	-	1	1	-	-	-	-	24	-	-	-	-	12	-	-	-	6	2	2	3

* (EPA)A INCLUDES ALL STRUCTURAL MEMBERS INCLUDING CROSSOVER CONNECTIONS. IF DESIRED ADD ANTENNA PIPE PER TABLE 2.
† THESE MOUNTS ARE NOT CLASSIFIED TO TIA-5053 STANDARD

Table 2: Antenna Pipe Additional EPA (Each)

Size	(EPA)A (ft2)	(EPA)A 1/2" Radial Ice (ft2)
2-3/8" x 96"	1.5	2.2
2-7/8" x 96"	1.8	2.5
2-7/8" x 126"	2.4	3.3

SHEET 2 OF 16		CATEGORY 02_Monopole	9	ACC1 REPLACE ACC2, PV-CMX-CG-BO REPLACE 115-242	3/16/21
		SERIES 01_Triangular	8	KKGS UPDATE	2/2/21
4/27/2021	SCALE 1:48	TYPE PV-LPPGS_GUARDIAN	7	REPLACED PKBK WITH PV-KKRS	11/11/20
DIMENSIONS ARE IN INCHES TOLERANCES U.N.O. HOLES: +1/16", -1/32" ANGULAR: PROFILE±1/4°, BEND±2° ALL OTHERS: ±1/16"		BY DJN	6	ADDED ALL THREAD NOTE TO COLLARS	7/27/20
		CHECKED SJS	5	ADDED HR2-AP3 CONFIGS	1/20/20
		STATUS APPROVED	REV	DESCRIPTION	DATE

PERFECTVISION

MONOPOLE GUARDIAN MOUNT

DOCUMENT NUMBER LPPGS-ENG-01-R9 | REV 9

C:\PVMSteel\Catalog\SW Working Files\Engineering Details\

PROPRIETARY AND CONFIDENTIAL THE INFORMATION CONTAINED IN THIS DRAWING IS THE SOLE PROPERTY OF PERFECTVISION. ANY REPRODUCTION IN PART OR AS A WHOLE WITHOUT THE WRITTEN PERMISSION OF PERFECTVISION IS PROHIBITED.

DigiSigner Document ID: d9dff40a-7aee-48fd-85bf-5cd21f60df6e

PART NUMBERS, WEIGHTS, & EPA

Table 5: KKGS Configurations

Part Number	Description	Weight (lbs)	(EPA)A (ft2)*	(EPA)A 1/2" Radial Ice (ft2)*	Included Parts																															
					PV-RM1045-GS	PV-RM3060-GS	PV-RM1045-MD	PV-RM3060-MD	PV-LPP-GS-B	PV--LPP-GS-EXT	PV-LPP-GS-HK	PV-LPP-GS-HR238	PV-LPP-GS-HR278	PV-LPP-GS-HR312	PV-KKGS-1	PV-XP-DC-2020	PV-XP-DC-2025	PV-XP-DC-2030	PV-XP-DC-2525	PV-XP-DC-2530	PIPE-238X96	PIPE-238X150	PIPE-238X174	PIPE-278X96	PIPE-278X126	PIPE-278X150	PIPE-278X174	PIPE-312X150	PIPE-312X174	PV-SCRB-RMGS	PV-CMX-CG-BO	PV-LPP-GS-ACC2
PV-LPPGS-12M-HR2-K-B	12'6" Face, 10"-40" OD Pole, 2-3/8" OD Horizontal Rail, Kicker, No Antenna Pipe	1710	21.2	28.5	1	-	1	-	1	-	1	1	-	-	3	-	-	-	-	-	3	-	-	-	-	-	3	-	1	1	3
PV-LPPGS-12M-HR25-K-B	12'6" Face, 10"-40" OD Pole, 2-7/8" OD Horizontal Rail, Kicker, No Antenna Pipe	1805	22.1	29.4	1	-	1	-	1	-	1	-	1	-	3	-	-	-	-	-	-	-	-	-	3	-	3	-	1	1	3
PV-LPPGS-12M-HR3-K-B	12'6" Face, 10"-40" OD Pole, 3-1/2" OD Horizontal Rail, Kicker, No Antenna Pipe	1885	23.3	30.6	1	-	1	-	1	-	1	-	-	1	3	-	-	-	-	-	-	-	-	-	-	-	6	-	1	1	3
PV-LPPGS-14M-HR2-K-B	14'6" Face, 13"-44" OD Pole, 2-3/8" OD Horizontal Rail, Kicker, No Antenna Pipe	2005	24.7	32.7	1	-	1	-	1	1	1	1	-	-	3	-	-	-	-	-	-	3	-	-	-	-	-	3	1	1	3
PV-LPPGS-14M-HR25-K-B	14'6" Face, 13"-44" OD Pole, 2-7/8" OD Horizontal Rail, Kicker, No Antenna Pipe	2110	25.7	33.8	1	-	1	-	1	1	1	-	1	-	3	-	-	-	-	-	-	-	-	-	-	3	-	3	1	1	3
PV-LPPGS-14M-HR3-K-B	14'6" Face, 13"-44" OD Pole, 3-1/2" OD Horizontal Rail, Kicker, No Antenna Pipe	2205	27.1	35.1	1	-	1	-	1	1	1	-	-	1	3	-	-	-	-	-	-	-	-	-	-	-	6	1	1	3
PV-LPPGS-14L-HR2-K-B	14'6" Face, 35"-60" OD Pole, 2-3/8" OD Horizontal Rail, Kicker, No Antenna Pipe	2020	22.7	30.6	-	1	-	1	1	-	1	1	-	-	3	-	-	-	-	-	-	3	-	-	-	-	-	3	1	1	3
PV-LPPGS-14L-HR25-K-B	14'6" Face, 35"-60" OD Pole, 2-7/8" OD Horizontal Rail, Kicker, No Antenna Pipe	2130	23.8	31.7	-	1	-	1	1	-	1	-	1	-	3	-	-	-	-	-	-	-	-	-	-	-	3	-	3	1	1	3
PV-LPPGS-14L-HR3-K-B	14'6" Face, 35"-60" OD Pole, 3-1/2" OD Horizontal Rail, Kicker, No Antenna Pipe	2220	25.1	33	-	1	-	1	1	-	1	-	-	1	3	-	-	-	-	-	-	-	-	-	-	-	6	1	1	3
PV-LPPGS-12M-HR2-K-AP1	12'6" Face, 10"-40" OD Pole, 2-3/8" OD Horizontal Rail, Kicker, (12) 2-3/8" x 96" Pipe	2235	39.9	55	1	-	1	-	1	-	1	1	-	-	3	12	-	12	-	-	12	3	-	-	-	-	3	-	1	1	3
PV-LPPGS-12M-HR25-K-AP1	12'6" Face, 10"-40" OD Pole, 2-7/8" OD Horizontal Rail, Kicker, (12) 2-3/8" x 96" Pipe	2340	40.8	55.9	1	-	1	-	1	-	1	-	1	-	3	-	12	12	-	-	12	-	-	-	3	-	3	-	1	1	3
PV-LPPGS-12M-HR3-K-AP1	12'6" Face, 10"-40" OD Pole, 3-1/2" OD Horizontal Rail, Kicker, (12) 2-3/8" x 96" Pipe	2430	42	57.1	1	-	1	-	1	-	1	-	-	1	3	-	-	24	-	-	12	-	-	-	-	-	6	-	1	1	3
PV-LPPGS-14M-HR2-K-AP1	14'6" Face, 13"-44" OD Pole, 2-3/8" OD Horizontal Rail, Kicker, (12) 2-3/8" x 96" Pipe	2525	43.4	59.2	1	-	1	-	1	1	1	1	-	-	3	12	-	12	-	-	12	-	3	-	-	-	-	-	3	1	1	3
PV-LPPGS-14M-HR25-K-AP1	14'6" Face, 13"-44" OD Pole, 2-7/8" OD Horizontal Rail, Kicker, (12) 2-3/8" x 96" Pipe	2645	44.5	60.3	1	-	1	-	1	1	1	-	1	-	3	-	12	12	-	-	12	-	-	-	-	-	3	-	3	1	1	3
PV-LPPGS-14M-HR3-K-AP1	14'6" Face, 13"-44" OD Pole, 3-1/2" OD Horizontal Rail, Kicker, (12) 2-3/8" x 96" Pipe	2750	45.8	61.6	1	-	1	-	1	1	1	-	-	1	3	-	-	24	-	-	12	-	-	-	-	-	-	-	6	1	1	3
PV-LPPGS-14L-HR2-K-AP1	14'6" Face, 35"-60" OD Pole, 2-3/8" OD Horizontal Rail, Kicker, (12) 2-3/8" x 96" Pipe	2540	41.5	57.1	-	1	-	1	1	-	1	1	-	-	3	12	-	12	-	-	12	-	3	-	-	-	-	-	3	1	1	3
PV-LPPGS-14L-HR25-K-AP1	14'6" Face, 35"-60" OD Pole, 2-7/8" OD Horizontal Rail, Kicker, (12) 2-3/8" x 96" Pipe	2660	42.5	58.2	-	1	-	1	1	-	1	-	1	-	3	-	12	12	-	-	12	-	-	-	-	-	3	-	3	1	1	3
PV-LPPGS-14L-HR3-K-AP1	14'6" Face, 35"-60" OD Pole, 3-1/2" OD Horizontal Rail, Kicker, (12) 2-3/8" x 96" Pipe	2760	43.9	59.5	-	1	-	1	1	-	1	-	-	1	3	-	-	24	-	-	12	-	-	-	-	-	-	-	6	1	1	3
PV-LPPGS-12M-HR2-K-AP3	12'6" Face, 10"-40" OD Pole, 2-3/8" OD Horizontal Rail, Kicker, (12) 2-7/8" x 96" Pipe	2465	43.7	58.8	1	-	1	-	1	-	1	1	-	-	3	-	12	-	-	12	-	3	-	12	-	-	-	3	-	1	1	3
PV-LPPGS-12M-HR25-K-AP3	12'6" Face, 10"-40" OD Pole, 2-7/8" OD Horizontal Rail, Kicker, (12) 2-7/8" x 96" Pipe	2570	44.7	59.8	1	-	1	-	1	-	1	-	1	-	3	-	-	-	12	12	-	-	-	12	-	3	-	3	-	1	1	3
PV-LPPGS-12M-HR3-K-AP3	12'6" Face, 10"-40" OD Pole, 3-1/2" OD Horizontal Rail, Kicker, (12) 2-7/8" x 96" Pipe	2665	45.8	60.9	1	-	1	-	1	-	1	-	-	1	3	-	-	-	-	24	-	-	-	12	-	-	-	6	-	1	1	3
PV-LPPGS-14M-HR2-K-AP3	14'6" Face, 13"-44" OD Pole, 2-3/8" OD Horizontal Rail, Kicker, (12) 2-7/8" x 96" Pipe	2770	47.2	63.1	1	-	1	-	1	1	1	1	-	-	3	-	12	-	-	12	-	-	3	12	-	-	-	-	3	1	1	3
PV-LPPGS-14M-HR25-K-AP3	14'6" Face, 13"-44" OD Pole, 2-7/8" OD Horizontal Rail, Kicker, (12) 2-7/8" x 96" Pipe	2875	48.3	64.1	1	-	1	-	1	1	1	-	1	-	3	-	-	-	12	12	-	-	-	12	-	-	3	-	3	1	1	3
PV-LPPGS-14M-HR3-K-AP3	14'6" Face, 13"-44" OD Pole, 3-1/2" OD Horizontal Rail, Kicker, (12) 2-7/8" x 96" Pipe	2980	49.6	65.5	1	-	1	-	1	1	1	-	-	1	3	-	-	-	-	24	-	-	-	12	-	-	-	-	6	1	1	3
PV-LPPGS-14L-HR2-K-AP3	14'6" Face, 35"-60" OD Pole, 2-3/8" OD Horizontal Rail, Kicker, (12) 2-7/8" x 96" Pipe	2785	45.3	60.9	-	1	-	1	1	-	1	1	-	-	3	-	12	-	-	12	-	-	3	12	-	-	-	-	3	1	1	3
PV-LPPGS-14L-HR25-K-AP3	14'6" Face, 35"-60" OD Pole, 2-7/8" OD Horizontal Rail, Kicker, (12) 2-7/8" x 96" Pipe	2890	46.4	62	-	1	-	1	1	-	1	-	1	-	3	-	-	-	12	12	-	-	-	12	-	-	3	-	3	1	1	3
PV-LPPGS-14L-HR3-K-AP3	14'6" Face, 35"-60" OD Pole, 3-1/2" OD Horizontal Rail, Kicker, (12) 2-7/8" x 96" Pipe	3000	47.7	63.3	-	1	-	1	1	-	1	-	-	1	3	-	-	-	-	24	-	-	-	12	-	-	-	-	6	1	1	3

* (EPA)A INCLUDES ALL STRUCTURAL MEMBERS INCLUDING CROSSOVER CONNECTIONS. IF DESIRED ADD ANTENNA PIPE PER TABLE 4.

Table 4: Antenna Pipe Additional EPA (Each)

Size	(EPA)A (ft2)	(EPA)A 1/2" Radial Ice (ft2)
2-3/8" x 96"	1.5	2.2
2-7/8" x 96"	1.8	2.5

SHEET 3 OF 16		CATEGORY 02_Monopole	9	ACC1 REPLACE ACC2, PV-CMX-CG-BO REPLACE 115-242	3/16/21
		SERIES 01_Triangular	8	KKGS UPDATE	2/2/21
4/27/2021	SCALE 1:48	TYPE PV-LPPGS_GUARDIAN	7	REPLACED PKBK WITH PV-KKRS	11/11/20
DIMENSIONS ARE IN INCHES TOLERANCES U.N.O. HOLES: +1/16", -1/32" ANGULAR: PROFILE±1/4°, BEND±2° ALL OTHERS: ±1/16"		BY DJN	6	ADDED ALL THREAD NOTE TO COLLARS	7/27/20
		CHECKED SJS	5	ADDED HR2-AP3 CONFIGS	1/20/20
		STATUS APPROVED	REV	DESCRIPTION	DATE

PERFECTVISION®

MONOPOLE GUARDIAN MOUNT

DOCUMENT NUMBER LPPGS-ENG-01-R9 | REV 9

C:\PWSteel\Catalog\SW Working Files\Engineering Details\

PROPRIETARY AND CONFIDENTIAL THE INFORMATION CONTAINED IN THIS DRAWING IS THE SOLE PROPERTY OF PERFECTVISION. ANY REPRODUCTION IN PART OR AS A WHOLE WITHOUT THE WRITTEN PERMISSION OF PERFECTVISION IS PROHIBITED.

DigiSigner Document ID: d9dff40a-7aee-48fd-85bf-5cd21f60df6e

INCLUDED PART OVERVIEW

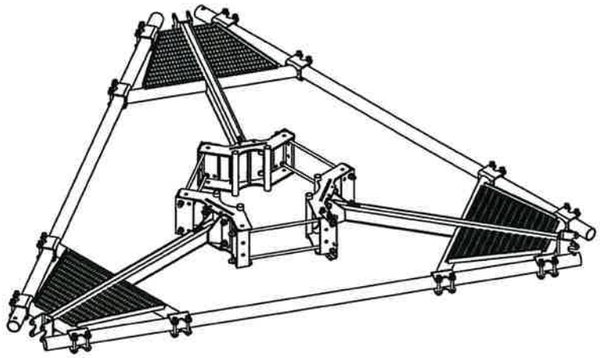

BASE MOUNT
(PV-LPPGS-12M-B SHOWN)

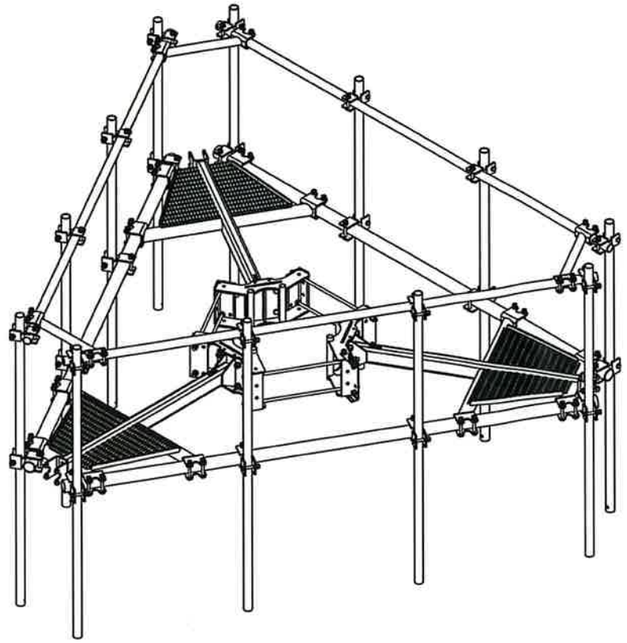

MOUNT WITH UPPER RAIL AND ANTENNA PIPE
(PV-LPPGS-12M-HR2-AP1 SHOWN)

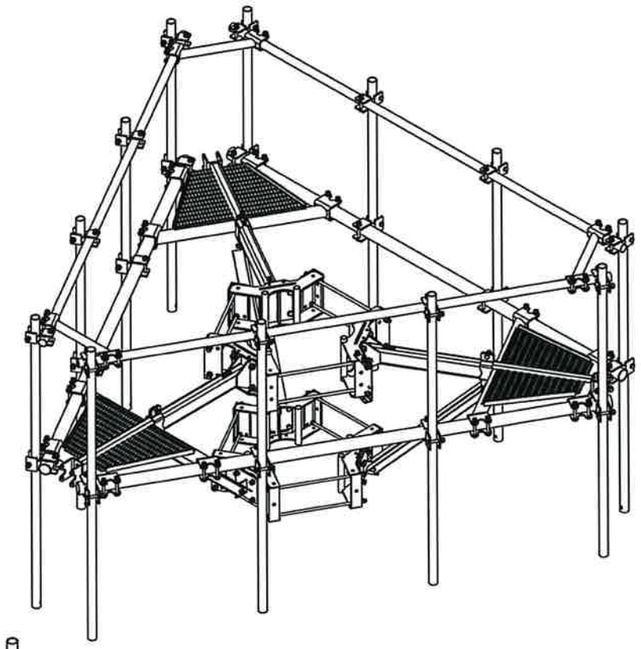

MOUNT WITH KICKER KIT AND ANTENNA PIPE
(PV-LPPGS-12M-HR2-K-AP1 SHOWN)

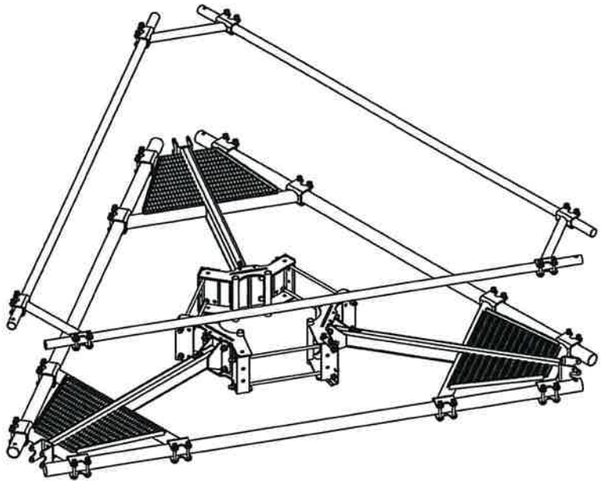

MOUNT WITH UPPER RAIL
(PV-LPPGS-12M-HR2-B SHOWN)

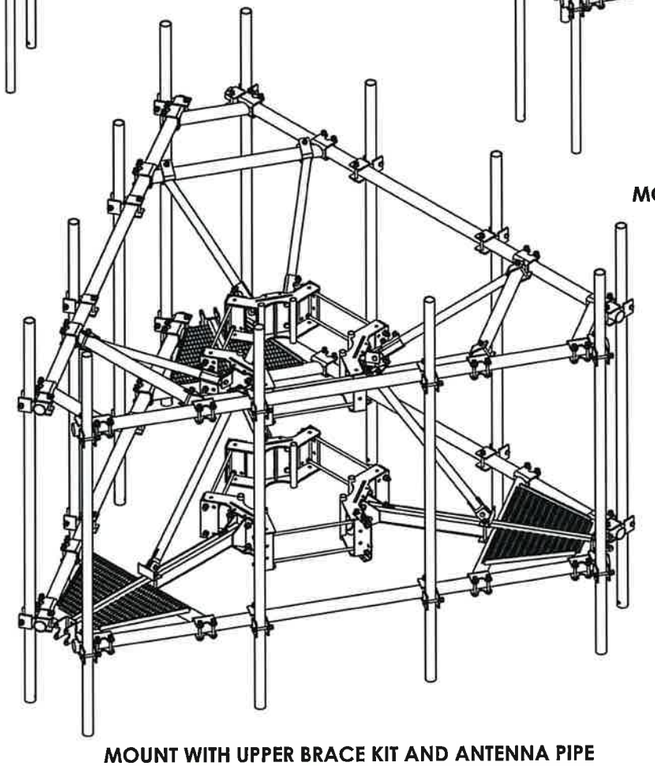

MOUNT WITH UPPER BRACE KIT AND ANTENNA PIPE
(PV-LPPGS-12M-TKB3-AP4 SHOWN)

Table 5: Threaded Connection Tightening Points	
Reference Config	**Total Connections**
Base Mount	48
Add Upper Rail	60
Add (12) Pipes	108*
Add KKGS	144
Add TKB	168

* APPROXIMATELY 40% LESS THAN INDUSTRY AVERAGE OF EQUIVALENT MOUNT

SHEET 4 OF 16		CATEGORY 02_Monopole	9	ACC1 REPLACE ACC2, PV-CMX-CG-BO REPLACE 115-242	3/16/21
		SERIES 01_Triangular	8	KKGS UPDATE	2/2/21
4/27/2021	SCALE 1:40	TYPE PV-LPPGS_GUARDIAN	7	REPLACED PKBK WITH PV-KKRS	11/11/20
DIMENSIONS ARE IN INCHES TOLERANCES U.N.O. HOLES: +1/16", -1/32" ANGULAR: PROFILE±1/4°, BEND±2° ALL OTHERS: ±1/16"		BY DJN	6	ADDED ALL THREAD NOTE TO COLLARS	7/27/20
		CHECKED SJS	5	ADDED HR2-AP3 CONFIGS	1/20/20
		STATUS APPROVED	REV	DESCRIPTION	DATE

PERFECTVISION®

MONOPOLE GUARDIAN MOUNT

DOCUMENT NUMBER LPPGS-ENG-01-R9 | REV 9

C:\PVMSteel\Catalog\SW Working Files\Engineering Details\

PROPRIETARY AND CONFIDENTIAL THE INFORMATION CONTAINED IN THIS DRAWING IS THE SOLE PROPERTY OF PERFECTVISION. ANY REPRODUCTION IN PART OR AS A WHOLE WITHOUT THE WRITTEN PERMISSION OF PERFECTVISION IS PROHIBITED.

DigiSigner Document ID: d9dff40a-7aee-48fd-85bf-5cd21f60df6e

MOUNT CLASSIFICATIONS

MOUNT CLASSIFICATION INFORMATION:

- STANDARDS: TIA-222-G, TIA-222-H, TIA-5053
- MAX STRUCTURE HEIGHT: 400ft
- STRUCTURE CLASS: I OR II
- EXPOSURE CATEGORY: B OR C
- TOPOGRAPHIC CATEGORY: 1
- DESIGN WIND PRESSURE: 135psf
- DESIGN WIND PRESSURE (ICED): 15psf
- DESIGN ICE THICKNESS (RADIAL): 2.75"

MOUNTS EXCEED THE FOLLOWING REQUIREMENTS:

- HEAVY 5
- HEAVY 10
- HEAVY WLL

APPROVED MOUNT CLASSIFICATIONS:

Table 6: Approved Mount Classifications

Part Number	Maximum Antenna Centerline Offset				
	0in	6in	12in	24in	39in
PV-LPPGS-12M-HR2-AP1	M1300R(1250)-4[0]	M1300R(1250)-4[6]	M1100R(1150)-4[12]	M700R(1000)-4[24]	-
PV-LPPGS-12M-HR25-AP1	M1350R(1250)-4[0]	M1350R(1250)-4[6]	M1150R(1200)-4[12]	M750R(1100)-4[24]	-
PV-LPPGS-12M-HR3-AP1	M1350R(1250)-4[0]	M1350R(1250)-4[6]	M1150R(1200)-4[12]	M750R(1100)-4[24]	-
PV-LPPGS-14M-HR2-AP1	M1300R(1200)-4[0]	M1300R(1200)-4[6]	M1100R(1150)-4[12]	M700R(1100)-4[24]	-
PV-LPPGS-14M-HR25-AP1	M1350R(1200)-4[0]	M1350R(1200)-4[6]	M1100R(1150)-4[12]	M700R(1100)-4[24]	-
PV-LPPGS-14M-HR3-AP1	M1350R(1200)-4[0]	M1350R(1200)-4[6]	M1100R(1150)-4[12]	M700R(1100)-4[24]	-
PV-LPPGS-14L-HR2-AP1	M1300R(1200)-4[0]	M1300R(1200)-4[6]	M1100R(1150)-4[12]	M700R(1100)-4[24]	-
PV-LPPGS-14L-HR25-AP1	M1350R(1200)-4[0]	M1350R(1200)-4[6]	M1100R(1150)-4[12]	M700R(1100)-4[24]	-
PV-LPPGS-14L-HR3-AP1	M1350R(1200)-4[0]	M1350R(1200)-4[6]	M1100R(1150)-4[12]	M700R(1100)-4[24]	-
PV-LPPGS-12M-HR2-AP3	M1300R(1250)-4[0]	M1300R(1250)-4[6]	M1100R(1150)-4[12]	M700R(1000)-4[24]	
PV-LPPGS-12M-HR25-AP3	M1900R(1350)-4[0]	M1900R(1350)-4[6]	M1600R(1250)-4[12]	M1100R(1150)-4[24]	-
PV-LPPGS-12M-HR3-AP3	M1850R(1300)-4[0]	M1850R(1300)-4[6]	M1500R(1250)-4[12]	M1050R(1150)-4[24]	-
PV-LPPGS-14M-HR2-AP3	M1300R(1200)-4[0]	M1300R(1200)-4[6]	M1100R(1150)-4[12]	M700R(1100)-4[24]	
PV-LPPGS-14M-HR25-AP3	M1800R(1300)-4[0]	M1800R(1300)-4[6]	M1600R(1250)-4[12]	M1200R(1150)-4[24]	-
PV-LPPGS-14M-HR3-AP3	M1800R(1300)-4[0]	M1800R(1300)-4[6]	M1600R(1250)-4[12]	M1200R(1150)-4[24]	-
PV-LPPGS-14L-HR2-AP3	M1300R(1200)-4[0]	M1300R(1200)-4[6]	M1100R(1150)-4[12]	M700R(1100)-4[24]	
PV-LPPGS-14L-HR25-AP3	M1800R(1300)-4[0]	M1800R(1300)-4[6]	M1600R(1250)-4[12]	M1200R(1150)-4[24]	-
PV-LPPGS-14L-HR3-AP3	M1800R(1300)-4[0]	M1800R(1300)-4[6]	M1600R(1250)-4[12]	M1200R(1150)-4[24]	-
PV-LPPGS-12M-TKB3-AP4	-	-	-	-	M1650R(2750)-4[39]
PV-LPPGS-14M-TKB3-AP4	-	-	-	-	M2400R(3150)-4[39]
PV-LPPGS-14L-TKB3-AP4	-	-	-	-	M2400R(3150)-4[39]

NOTE: ON POLES 3/16" OR LESS THICK, PV-PKBK KICKER KIT IS REQUIRED. SEE SHEETS 3&6

Table 7: Mount Classification Identification Example

M1750R(1450)-4[6]	Used at the beginning of each mount identification.
M**1750**R(1450)-4[6]	The maximum factored horizontal force (**1750**lbf), F, considered for design under extreme wind condition at each mounting pipe location.
M1750**R**(1450)-4[6]	Classification category.
M1750R(**1450**)-4[6]	Maximum factored vertical force (**1450**lbf), Fzi, considered for design under extreme ice condition at each mounting pipe location.
M1750R(1450)-**4**[6]	The mount is designed for (**4**) mounting pipe locations per sector.
M1750R(1450)-4[**6**]	The centerline of the maximum horizontal concentrated force, F, may be offset vertically from the mount centerline by up to **6** inches.

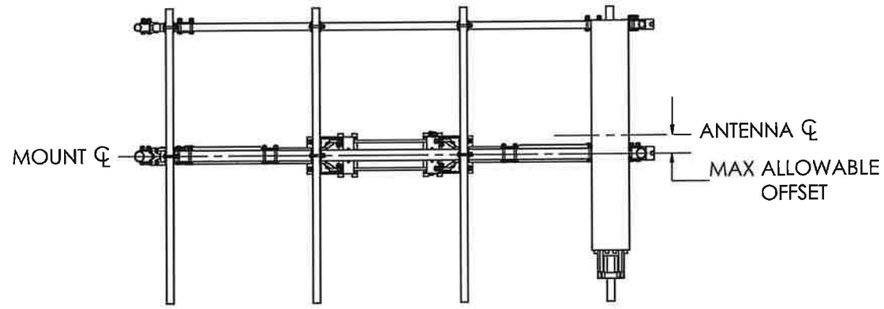

ALLOWABLE OFFSET - SINGLE COLLAR

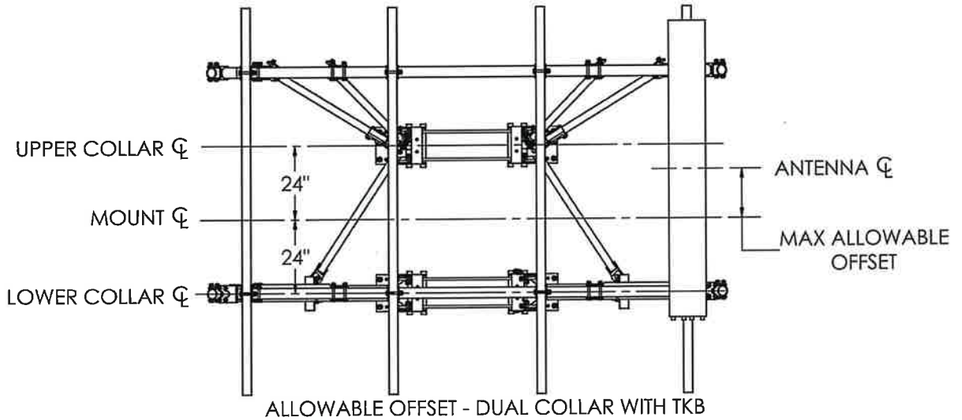

ALLOWABLE OFFSET - DUAL COLLAR WITH TKB

SHEET: 5 OF 16	CATEGORY: 02_Monopole	9	ACC1 REPLACE ACC2, PV-CMX-CG-BO REPLACE 115-242	3/16/21	PERFECTVISION
SCALE: 1:48	SERIES: 01_Triangular	8	KKGS UPDATE	2/2/21	
4/27/2021	TYPE: PV-LPPGS_GUARDIAN	7	REPLACED PKBK WITH PV-KKRS	11/11/20	
DIMENSIONS ARE IN INCHES TOLERANCES U.N.O. HOLES: +1/16", -1/32" ANGULAR: PROFILE ±1/4°, BEND ±2° ALL OTHERS: ±1/16"	BY: DJN	6	ADDED ALL THREAD NOTE TO COLLARS	7/27/20	MONOPOLE GUARDIAN MOUNT
	CHECKED: SJS	5	ADDED HR2-AP3 CONFIGS	1/20/20	DOCUMENT NUMBER: LPPGS-ENG-01-R9 REV: 9
	STATUS: APPROVED	REV	DESCRIPTION	DATE	

C:\PVMSteel\Catalog\SW Working Files\Engineering Details\

PROPRIETARY AND CONFIDENTIAL THE INFORMATION CONTAINED IN THIS DRAWING IS THE SOLE PROPERTY OF PERFECTVISION. ANY REPRODUCTION IN PART OR AS A WHOLE WITHOUT THE WRITTEN PERMISSION OF PERFECTVISION IS PROHIBITED.

DigiSigner Document ID: d9dff40a-7aee-48fd-85bf-5cd21f60df6e

MOUNT CLASSIFICATIONS

MOUNT CLASSIFICATION INFORMATION:

- STANDARDS: TIA-222-G, TIA-222-H, TIA-5053
- MAX STRUCTURE HEIGHT: 400ft
- STRUCTURE CLASS: I OR II
- EXPOSURE CATEGORY: B OR C
- TOPOGRAPHIC CATEGORY: 1
- DESIGN WIND PRESSURE: 135psf
- DESIGN WIND PRESSURE (ICED): 15psf
- DESIGN ICE THICKNESS (RADIAL): 2.75"

MOUNTS EXCEED THE FOLLOWING REQUIREMENTS:

- HEAVY 5
- HEAVY 10
- HEAVY WLL

APPROVED MOUNT CLASSIFICATIONS:

Table 8: Approved Mount Classifications

		Maximum Antenna Centerline Offset			
		0in	6in	12in	24in
Part Number	PV-LPPGS-12M-HR2-K-AP1	M1400R(1600)-4[0]	M1350R(1600)-4[6]	M1150R(1500)-4[12]	M800R(1500)-4[24]
	PV-LPPGS-12M-HR25-K-AP1	M1450R(1600)-4[0]	M1450R(1600)-4[6]	M1300R(1500)-4[12]	M1000R(1500)-4[24]
	PV-LPPGS-12M-HR3-K-AP1	M1450R(1600)-4[0]	M1450R(1600)-4[6]	M1300R(1500)-4[12]	M1000R(1500)-4[24]
	PV-LPPGS-14M-HR2-K-AP1	M1400R(1600)-4[0]	M1250R(1600)-4[6]	M1100R(1500)-4[12]	M800R(1500)-4[24]
	PV-LPPGS-14M-HR25-K-AP1	M1450R(1600)-4[0]	M1400R(1600)-4[6]	M1250R(1500)-4[12]	M900R(1500)-4[24]
	PV-LPPGS-14M-HR3-K-AP1	M1500R(1600)-4[0]	M1500R(1600)-4[6]	M1300R(1500)-4[12]	M950R(1500)-4[24]
	PV-LPPGS-14L-HR2-K-AP1	M1400R(1600)-4[0]	M1250R(1600)-4[6]	M1100R(1500)-4[12]	M800R(1500)-4[24]
	PV-LPPGS-14L-HR25-K-AP1	M1450R(1600)-4[0]	M1400R(1600)-4[6]	M1250R(1500)-4[12]	M900R(1500)-4[24]
	PV-LPPGS-14L-HR3-K-AP1	M1500R(1600)-4[0]	M1500R(1600)-4[6]	M1300R(1500)-4[12]	M950R(1500)-4[24]
	PV-LPPGS-12M-HR2-K-AP3	M1800R(2000)-4[0]	M1800R(2000)-4[6]	M1600R(1800)-4[12]	M1200R(1800)-4[24]
	PV-LPPGS-12M-HR25-K-AP3	M2050R(2400)-4[0]	M2050R(2400)-4[6]	M1800R(2200)-4[12]	M1300R(2200)-4[24]
	PV-LPPGS-12M-HR3-K-AP3	M2050R(2400)-4[0]	M2050R(2400)-4[6]	M1800R(2200)-4[12]	M1300R(2200)-4[24]
	PV-LPPGS-14M-HR2-K-AP3	M1800R(2000)-4[0]	M1800R(2000)-4[6]	M1600R(1800)-4[12]	M1200R(1700)-4[24]
	PV-LPPGS-14M-HR25-K-AP3	M2050R(2000)-4[0]	M2050R(2000)-4[6]	M1700R(1800)-4[12]	M1300R(1700)-4[24]
	PV-LPPGS-14M-HR3-K-AP3	M2050R(2000)-4[0]	M2050R(1950)-4[6]	M1700R(1800)-4[12]	M1300R(1700)-4[24]
	PV-LPPGS-14L-HR2-K-AP3	M1800R(2000)-4[0]	M1800R(2000)-4[6]	M1600R(1800)-4[12]	M1200R(1700)-4[24]
	PV-LPPGS-14L-HR25-K-AP3	M2050R(2000)-4[0]	M2050R(2000)-4[6]	M1700R(1800)-4[12]	M1300R(1700)-4[24]
	PV-LPPGS-14L-HR3-K-AP3	M2050R(2000)-4[0]	M2050R(1950)-4[6]	M1700R(1800)-4[12]	M1300R(1700)-4[24]

Table 9: Mount Classification Identification Example

M1750R(1450)-4[6]	Used at the beginning of each mount identification.
M**1750**R(1450)-4[6]	The maximum factored horizontal force (**1750**lbf), F, considered for design under extreme wind condition at each mounting pipe location.
M1750**R**(1450)-4[6]	Classification category.
M1750R(**1450**)-4[6]	Maximum factored vertical force (**1450**lbf), Fzi, considered for design under extreme ice condition at each mounting pipe location.
M1750R(1450)-**4**[6]	The mount is designed for (**4**) mounting pipe locations per sector.
M1750R(1450)-4[**6**]	The centerline of the maximum horizontal concentrated force, F, may be offset vertically from the mount centerline by up to **6** inches.

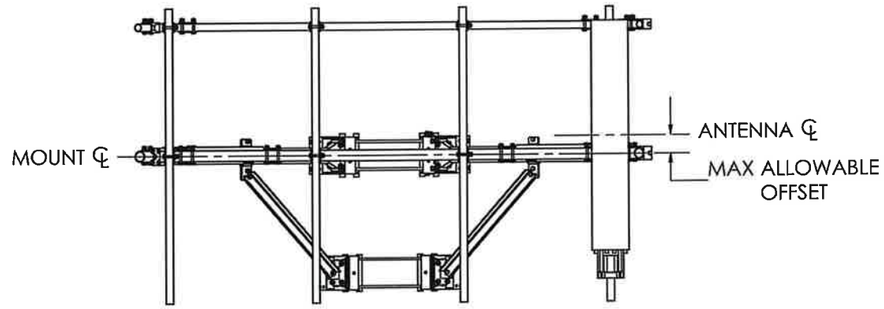

ALLOWABLE OFFSET - SINGLE COLLAR

SHEET 6 OF 16		CATEGORY 02_Monopole	9	ACC1 REPLACE ACC2, PV-CMX-CG-BO REPLACE 115-242	3/16/21
4/27/2021	SCALE 1:48	SERIES 01_Triangular	8	KKGS UPDATE	2/2/21
DIMENSIONS ARE IN INCHES TOLERANCES U.N.O. HOLES: +1/16", -1/32" ANGULAR: PROFILE±1/4°, BEND ±2° ALL OTHERS: ±1/16"		TYPE PV-LPPGS_GUARDIAN	7	REPLACED PKBK WITH PV-KKRS	11/11/20
		BY DJN	6	ADDED ALL THREAD NOTE TO COLLARS	7/27/20
		CHECKED SJS	5	ADDED HR2-AP3 CONFIGS	1/20/20
		STATUS APPROVED	REV	DESCRIPTION	DATE

PERFECTVISION®

MONOPOLE GUARDIAN MOUNT

DOCUMENT NUMBER LPPGS-ENG-01-R9 | REV 9

C:\PWSteel\Catalog\SW Working Files\Engineering Details\

PROPRIETARY AND CONFIDENTIAL THE INFORMATION CONTAINED IN THIS DRAWING IS THE SOLE PROPERTY OF PERFECTVISION. ANY REPRODUCTION IN PART OR AS A WHOLE WITHOUT THE WRITTEN PERMISSION OF PERFECTVISION IS PROHIBITED.

DigiSigner Document ID: d9dff40a-7aee-48fd-85bf-5cd21f60df6e

STANDARD POLE

PV-RM1045-GS

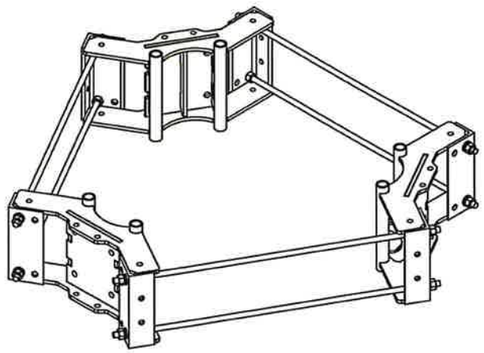

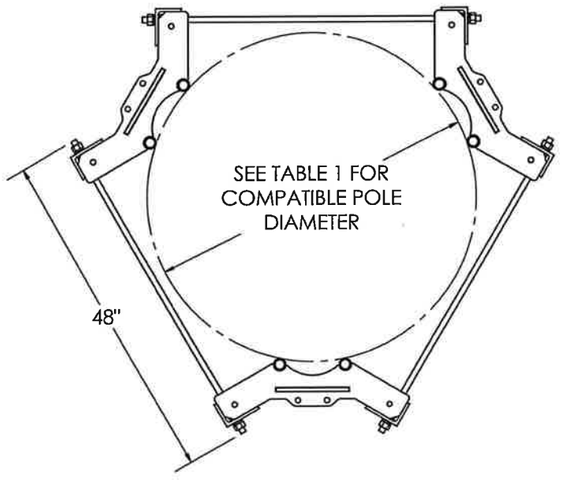

LARGE POLE

PV-RM3060-GS

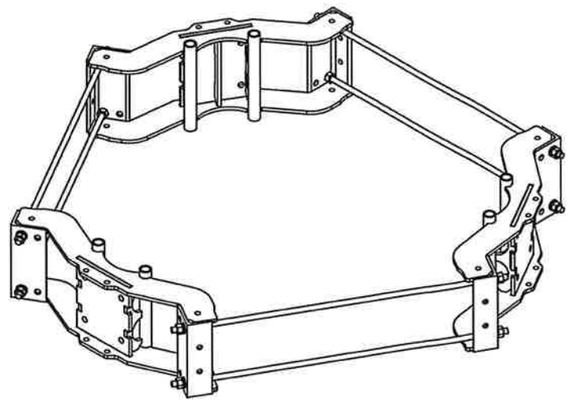

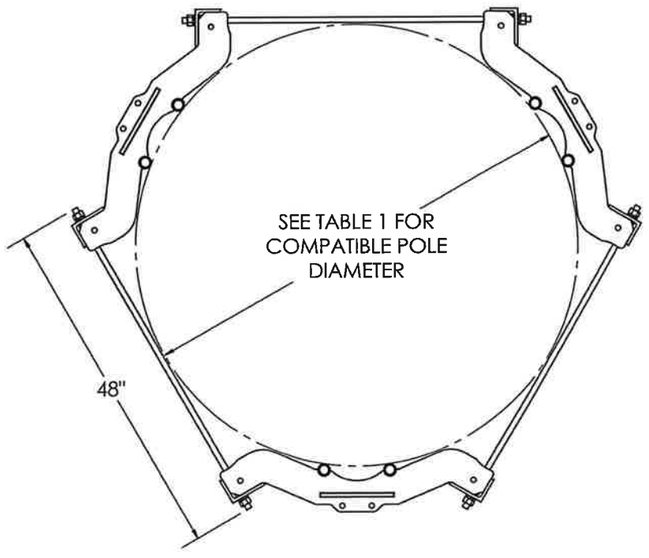

COLLAR MOUNT INSTALLATION

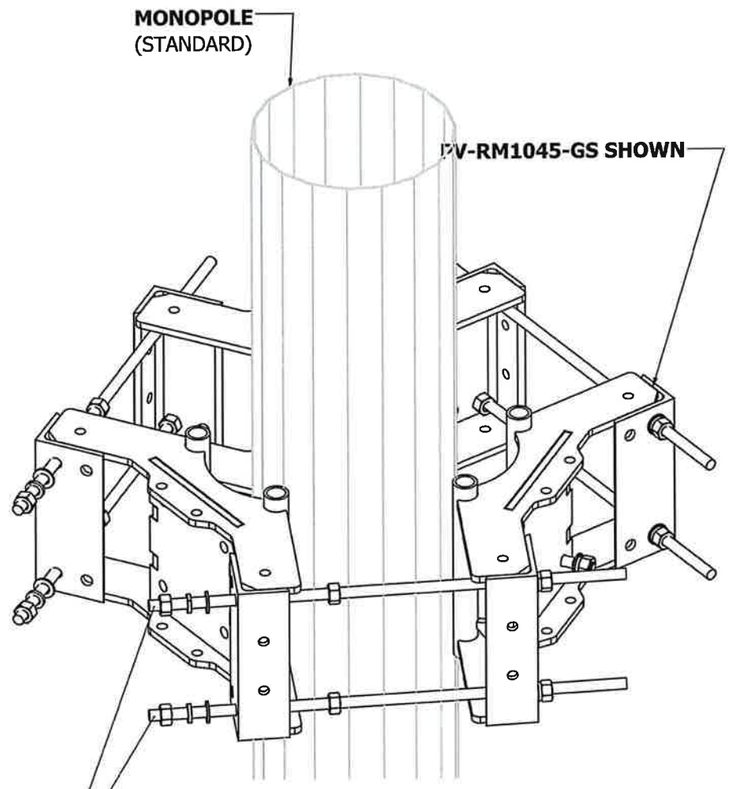

WHEN INSTALLED ADJACENT TO CLIMB PATH REMOVE EXCESS ALL-THREAD TO PROMOTE CLIMBER SAFETY AND PREVENT CONTACT WITH SAFETY CLIMB WIRE ROPE.
MINIMUM 1" REQUIRED BEYOND HEX NUT

ROD CUT LENGTH

Table 10: Threaded Rod Cut Length (in)

Pole OD (in)	PV-RM1045-GS	PV-RM3060-GS
10	14	-
15	19.5	-
20	24.5	-
25	29	-
30	33.5	24
35	38	26.5
40	42.5	31
45	48	35.5
50	-	40
55	-	44
60	-	48

C:\PVMSteel\Catalog\SW Working Files\Engineering Details\

SHEET: 7 OF 16		CATEGORY: 02_Monopole	9	ACC1 REPLACE ACC2, PV-CMX-CG-BO REPLACE 115-242	3/16/21
		SERIES: 01_Triangular	8	KKGS UPDATE	2/2/21
4/27/2021	SCALE: 1:20	TYPE: PV-LPPGS_GUARDIAN	7	REPLACED PKBK WITH PV-KKRS	11/11/20
DIMENSIONS ARE IN INCHES TOLERANCES U.N.O. HOLES: +1/16", -1/32" ANGULAR: PROFILE±1/4°, BEND±2° ALL OTHERS: ±1/16"		BY: DJN	6	ADDED ALL THREAD NOTE TO COLLARS	7/27/20
		CHECKED: SJS	5	ADDED HR2-AP3 CONFIGS	1/20/20
		STATUS: APPROVED	REV	DESCRIPTION	DATE

PERFECTVISION

MONOPOLE GUARDIAN MOUNT

DOCUMENT NUMBER: LPPGS-ENG-01-R9 | REV: 9

PROPRIETARY AND CONFIDENTIAL THE INFORMATION CONTAINED IN THIS DRAWING IS THE SOLE PROPERTY OF PERFECTVISION. ANY REPRODUCTION IN PART OR AS A WHOLE WITHOUT THE WRITTEN PERMISSION OF PERFECTVISION IS PROHIBITED.

DigiSigner Document ID: d9dff40a-7aee-48fd-85bf-5cd21f60df6e

PV-XP-DC

DUALCROSS 90° CROSSOVER BRACKET

Table 11: Crossover Configurations and Capacities

Part Number	Weight	Pipe 1 Size (Vertical)	Pipe 2 Size (Horizontal)	Pipe 1 Bolt Size	Pipe 2 Bolt Size	Available Sliding Strength (Φ=0.7)			Available Torsional Strength (Φ=0.7)		Available Lateral Twist Strength (Φ=0.9)
						ΦRns (X)	ΦRns (Y)	ΦRns (Z)	ΦRnr (X)	ΦRnr (Y)	ΦRnl (Z)
	lbs	*in*	*in*	*in*	*in*	*kip*	*kip*	*kip*	*kip-in*	*kip-in*	*kip-in*
PV-XP-DC-2020	6.1	Ø2.375	Ø2.375	Ø5/8 x 4-1/2	Ø5/8 x 4-1/2	3.85	3.85	Fixed	6.0	6.0	14.0
PV-XP-DC-2025	7.0	Ø2.375	Ø2.875	Ø5/8 x 4-1/2	Ø5/8 x 5	3.85	3.85	Fixed	6.0	6.0	14.0
PV-XP-DC-2030	8.1	Ø2.375	Ø3.5	Ø5/8 x 4-1/2	Ø5/8 x 5-1/2	3.85	3.85	Fixed	6.8	6.0	14.0
PV-XP-DC-2525	8.0	Ø2.875	Ø2.875	Ø5/8 x 5	Ø5/8 x 5	3.85	3.85	Fixed	6.0	6.0	20.0
PV-XP-DC-2530	9.3	Ø2.875	Ø3.5	Ø5/8 x 5	Ø5/8 x 5-1/2	3.85	3.85	Fixed	6.8	6.0	20.0
PV-XP-DC-3030	10.7	Ø3.5	Ø3.5	Ø5/8 x 5-1/2	Ø5/8 x 5-1/2	3.85	3.85	Fixed	6.8	6.8	27.0
PV-XP-DC-3040	13.1	Ø3.5	Ø4.5	Ø5/8 x 5-1/2	Ø5/8 x 6-1/2	3.85	3.85	Fixed	6.8	6.8	27.0

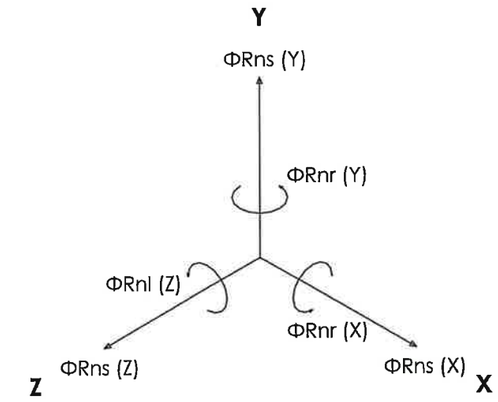

NOTES:

- CAPACITY VALUES EXPERIMENTALLY DETERMINED
- INSTALLATION REQUIREMENTS:
  - MINIMUM BOLT TORQUE: 100 FT-LBS
  - CLEAN, DRY ASSEMBLY
  - GALVANIZED BRACKET AND HARDWARE
  - COLORED WAX COATING ON NUTS
- MATERIALS
  - BRACKET: A36 HDG
  - HARDWARE: A325 HDG BOLT, A563DH NUT

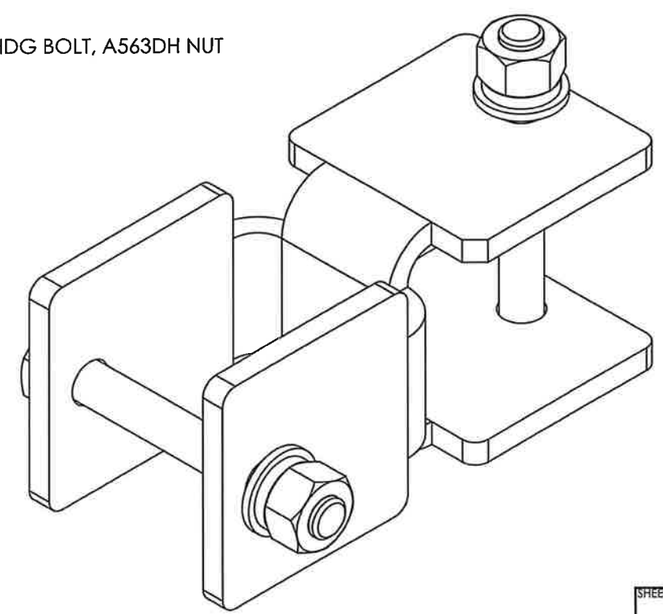

PV-XP-DC
DUALCROSS 90° CROSSOVER

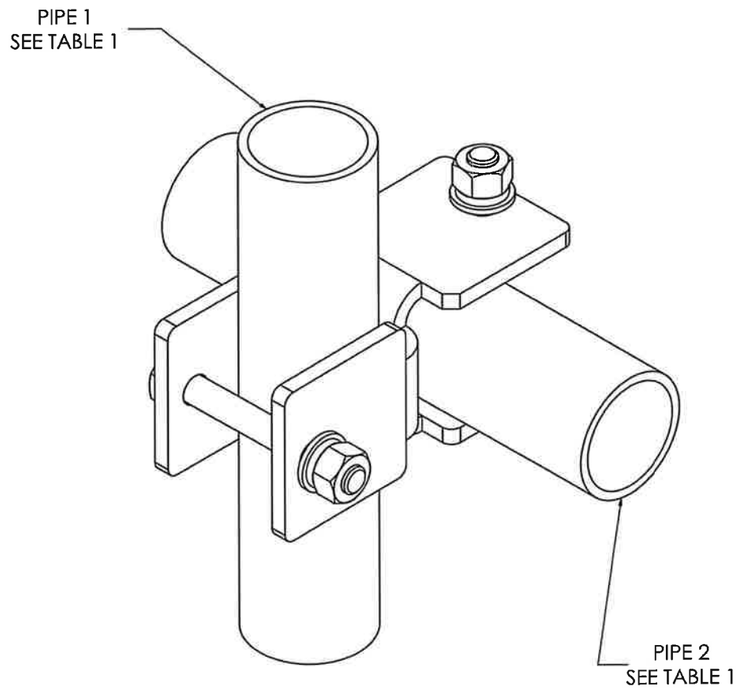

SHEET: 8 OF 16		CATEGORY: 02_Monopole	9	ACC1 REPLACE ACC2, PV-CMX-CG-BO REPLACE 115-242	3/16/21
		SERIES: 01_Triangular	8	KKGS UPDATE	2/2/21
4/27/2021	SCALE: 1:2	TYPE: PV-LPPGS_GUARDIAN	7	REPLACED PKBK WITH PV-KKRS	11/11/20
DIMENSIONS ARE IN INCHES TOLERANCES U.N.O. HOLES: +1/16", -1/32" ANGULAR: PROFILE±1/4°, BEND±2° ALL OTHERS: ±1/16"		BY: DJN	6	ADDED ALL THREAD NOTE TO COLLARS	7/27/20
		CHECKED: SJS	5	ADDED HR2-AP3 CONFIGS	1/20/20
		STATUS: APPROVED	REV	DESCRIPTION	DATE

PERFECTVISION®

MONOPOLE GUARDIAN MOUNT

DOCUMENT NUMBER: LPPGS-ENG-01-R9 | REV: 9

C:\PWSteel\Catalog\SW Working Files\Engineering Details\

PROPRIETARY AND CONFIDENTIAL THE INFORMATION CONTAINED IN THIS DRAWING IS THE SOLE PROPERTY OF PERFECTVISION. ANY REPRODUCTION IN PART OR AS A WHOLE WITHOUT THE WRITTEN PERMISSION OF PERFECTVISION IS PROHIBITED.

DigiSigner Document ID: d9dff40a-7aee-48fd-85bf-5cd21f60df6e

PV-XP-DC

DUALCROSS 90° CROSSOVER BRACKET

PRE-INSTALL ASSEMBLY:

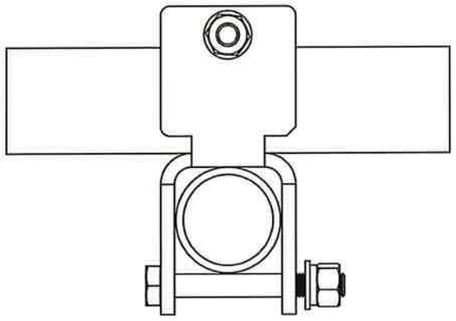

TOP

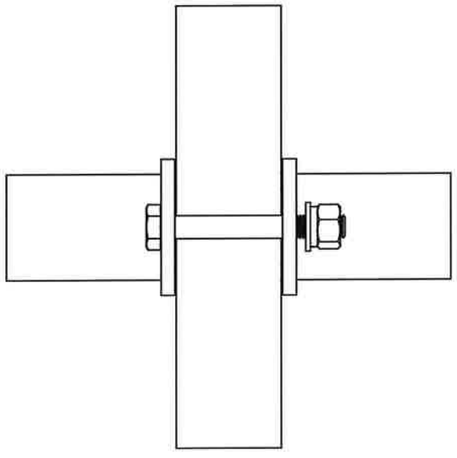

FRONT

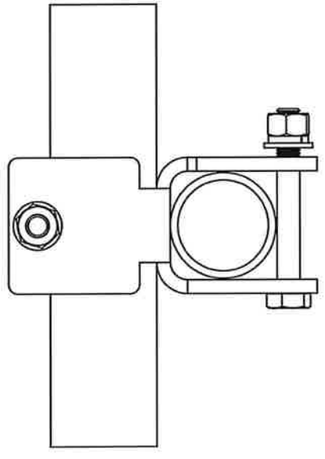

SIDE

POST-INSTALL ASSEMBLY:

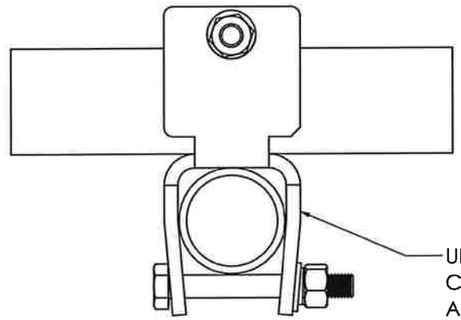

TOP

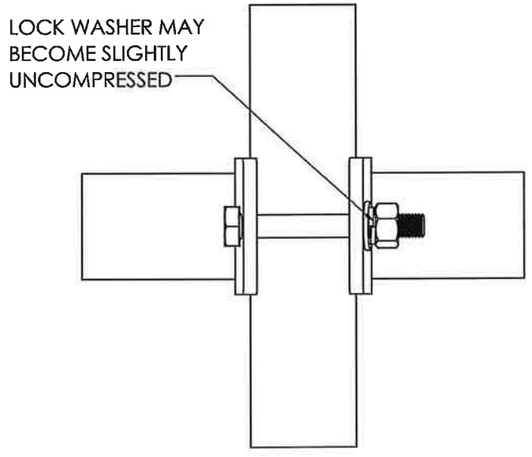

FRONT

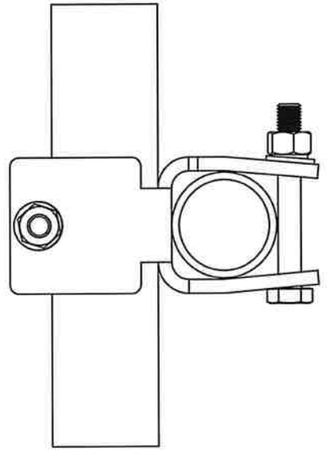

SIDE

SHEET: 9 OF 16		CATEGORY: 02_Monopole	9	ACC1 REPLACE ACC2, PV-CMX-CG-BO REPLACE 115-242	3/16/21
4/27/2021	SCALE: 1:4	SERIES: 01_Triangular	8	KKGS UPDATE	2/2/21
DIMENSIONS ARE IN INCHES TOLERANCES U.N.O. HOLES: +1/16", -1/32" ANGULAR: PROFILE±1/4°, BEND±2° ALL OTHERS: ±1/16"		TYPE: PV-LPPGS_GUARDIAN	7	REPLACED PKBK WITH PV-KKRS	11/11/20
		BY: DJN	6	ADDED ALL THREAD NOTE TO COLLARS	7/27/20
		CHECKED: SJS	5	ADDED HR2-AP3 CONFIGS	1/20/20
		STATUS: APPROVED	REV	DESCRIPTION	DATE

PERFECTVISION®

MONOPOLE GUARDIAN MOUNT

DOCUMENT NUMBER: LPPGS-ENG-01-R9 | REV: 9

C:\PWSteel\Catalog\SW Working Files\Engineering Details\

PROPRIETARY AND CONFIDENTIAL THE INFORMATION CONTAINED IN THIS DRAWING IS THE SOLE PROPERTY OF PERFECTVISION. ANY REPRODUCTION IN PART OR AS A WHOLE WITHOUT THE WRITTEN PERMISSION OF PERFECTVISION IS PROHIBITED.

MEMORANDUM

To: Plan Commission
From: Deputy Director of Development and Planning Services Michaela Kohlstedt
Date: 2025-09-30
Subject: DOCKET NO. PCD-25-11 - 1250 TECHNY ROAD - CRATE & BARREL (*Public Hearing*). An application filed by Euromarket Designs Inc. d/b/a Crate & Barrel as sub-lessee of the property commonly known as 1250 Techny Road, which is leased by Feiga/Cimarron Northbrook, LLC c/o BLDG Management Co., Inc. The Subject Property is owned by Parcel NC-1A/NC-1B LLC/Techny Land Corporation NFP, for the purposes of: (A) Special Permit for Child Day Care Services (SIC No. 8351.00) in the O-3 General Office/Techny Overlay District; and (B) Approval of any such variations, waivers, and zoning relief as may be necessary.

Overview

Crate & Barrel proposes to repurpose a portion of the existing office and warehouse building and operate a child daycare facility with outdoor playground on the Subject Property.

Fiscal Impact

N/A.

Recommendation

Conduct a public hearing and consider a draft Resolution recommending approval.

Background

See attachments.

1250 Techny - Staff Report 9-30-25
1250 Techny - Sustainability Addendum
1250 Techny - Draft Plan Commission Resolution
1250 Techny - Application Summary, Aerials, Site Photos
1250 Techny - BOT Minutes 7-8-25
1250 Techny - Public Comment
1250 Techny - Formal Application
1250 Techny - Narrative & Plans

MEMORANDUM

To: Plan Commission
From: Swati Pandey, Senior Planner
CC: Michaela Kohlstedt, Deputy Director
Date: September 30, 2025
Subject: PCD-25-11: 1250 Techny Road – Child Day Care Facility with Outdoor Playground

INTRODUCTION

On September 30, 2025 the Plan Commission will conduct a public hearing on an application filed by Euromarket Designs Inc. d/b/a Crate & Barrel (the "Applicant") as lessee of the property commonly known as 1250 Techny Road (the "Subject Property), which is owned by Parcel NC-1A/NC-1B LLC (the "Owner"). The Applicant is proposing to repurpose a portion of their building and operate a child daycare facility with outdoor playground on the Subject Property. The following zoning relief is requested:

A. Special Permit for Child Day Care Services (SIC No. 8351.00) in the O-3 General Office/Techny Overlay District; and

B. Approval of any such variations, waivers, and zoning relief as may be necessary to accomplish development and use of the Subject Property as requested by the Applicant

A sign has been posted on the Subject Property indicating the time and date of the Plan Commission public hearing. The Applicant has submitted evidence that the mailed notice requirements of the Zoning Code have been satisfied. The Plan Commission hearing was properly noticed in the August 28, 2025 edition of the *Northbrook Star*. Staff has received one general inquiry, and one written comment, which is attached, with concerns for increased traffic.

PROPERTY DESCRIPTION

The Subject Property is identified as being:

- located north of the intersection of Techny Road and Founders Drive;
- approximately 14.6 acres in size;
- improved with an office building (167,000 square feet) for Crate and Barrel corporate office;
- zoned O-3 General Office within the Techny Overlay District;
- designated as appropriate for Professional Office in the Comprehensive Plan's Future Land Use;
- surrounded by properties with land uses as depicted on the attached Application Summary;
- not located within the 100-year flood plain; and
- not located in proximity to any areas identified in the Master Stormwater Management Plan.
- The Village's Bicycle and Pedestrian Plan designates Techny Road and Founders Drive in front of the property as having existing Shared Use Path (facilities separated from roadways for use by bicyclists and pedestrians).

BACKGROUND INFORMATION

- The Subject Property is a Crate and Barrel corporate office with a multi-story office and warehouse building and parking lot. The facility includes offices, merchandise areas, and amenities for employees

inclusive of a café and fitness center. The site is accessible from Techny Road and consists of a parking lot to the northwest and southeast part of the site, which consists of 637 parking spaces.

Preliminary Review

On July 8, 2025, the Board of Trustees conducted a preliminary review of the request for a child daycare facility at the property. The Board found the request to be appropriate but recommended compliance with sustainability requirements. An excerpt of the Board of Trustees minutes is attached for reference, and the meeting can be viewed on the Village website as well to hear the actual commentary from the Trustees.

The proposal and the general layout of the plan presented at preliminary review have not changed with the formal application, however, the scope of minor work on the Subject Property and the level of detail has expanded which is discussed later in the report. The following is a table of the comments made by members of the Board of Trustees:

Trustee	Title	Status	Comments
Kathryn Ciesla	Village President	Present	In favor of request
Robert Israel	Trustee	Present	In favor of request
Heather Ross	Trustee	Present	In favor of the request; address the sustainability recommendations
Johannah Hebl	Trustee	Present	Asked if this is for employees; presence of any heritage trees in outdoor play area; In favor of request
Joy Ebhomielen	Trustee	Present	Asked about the operator; In favor of request
Michelle Kohler	Trustee	Present	In favor of request
Matt Cassidy	Trustee	Present	In favor of request

Staff Review

Prior to scheduling a public hearing the application underwent the standard review process and was reviewed by the following departments/entities:

- Development and Planning Services (Planning & Zoning)
- Sustainability
- Engineering
- Tree Preservation
- Fire
- Police

There were minor comments from the reviewers, and they all approved the application upon review, subject to further review at the time of permitting. The tree preservation officer has stated that there is only one landmark tree within the scope of the project, which will be handled during permitting. It should be noted that there were some additional zoning questions raised and asked of the Applicant. Included with the material submitted by the Applicant are the responses to those questions.

Compliance with Village Plans

- The Comprehensive Plan identifies the property for professional office uses which is intended to accommodate business and professional offices requiring a limited amount of space and moderate intensity of pedestrian and vehicular traffic. Some subordinate uses considered in this classification include business services, educational services, fitness facilities, religious and membership organizations, as well as limited retail uses and restaurants.

- The Village's Bicycle and Pedestrian Plan is applicable and as noted earlier in this memo, it designates Techny Road and Founders Drive in front of the property as having existing Shared Use Path (facilities separated from roadways for use by bicyclists and pedestrians).

PROPOSED PROJECT

- Crate and Barrel, the Applicant, occupies the property with their corporate office eas a single tenant. The Applicant wants to renovate a portion of their office area on the first floor of the building to occupy and operate a child daycare facility. The daycare services would initially be offered to the Crate and Barrel employees and any excess capacity would be available to the general public. The child daycare facility will be operated by Bright Horizons, which will enter into an agreement with Crate and Barrel as operational partner. The Applicant is a subtenant on the property and the property owners have provided consent to the proposal, which is attached. A child daycare facility is a special permit use in the O-3 General Office/Techny Overlay District. Details regarding the proposed request are outlined in the attached material submitted by the Applicant.
- The proposed daycare will occupy 6,200 square feet in the southwest portion of the existing office building. An existing entrance door and path (as shown on the site plan) will be used to access the daycare. Two new egress doors (on the north and south side) will be added to the childcare facility, with access to the existing parking lot and the proposed outdoor play area.
- The applicant will provide designated daycare parking for employees and visitors within the parking lot near the facility. There will be a speed table added within the drive aisle near the facility for safety purposes, including directional signage. The details are shown on the site plan attached. There will be no site or building changes besides noted above.
- The facility shall serve children between the age range of infants to five years old; divided into four classrooms with a total of 63 children within the facility. The class sizes would comply with the student/staff ratio as required by the DCFS guidelines.
- The Applicant has stated that the parents and guardians will park in the parking lot and accompany the children in and out of the facility. Additionally, the applicant will place "No drop-off/pick-up" signage along the fire lane in front of the entrance to avoid queuing along the building.
- The proposed hours of operation are 6:30am – 7:00pm Monday through Friday; closed on weekends. The applicant has stated there will be occasional special events held outdoors on the property in the evening. The facility will be staffed by a total of 14 employees.
- There will be modifications made to a portion of the first floor of the southwest portion of the office building to accommodate the proposed day care, as shown on the floor plan attached.
- There are 637 parking spaces provided on the property. The parking requirement for a day care facility is 1 per employee plus 1 per 10 students. Based on the data provided by the Applicant, a total of 21 spaces would be required for the proposed use. The applicant has provided a parking analysis for the property on the proposed site plan showing compliance with the parking requirements of the Zoning Code.
- No signage information for the proposed use has been submitted. Any new signage on the property will require compliance with the Zoning Code and a sign permit prior to installation.
- The Applicant has proposed a 5,000 square-foot outdoor playground area enclosed with a six-foot tall black metal fence, adjacent to the southwest portion of the building. The play area will be directly accessed through a door to the north side of the fence. The play area will be developed with a wood fiber surface and have play equipment stations for nature-based play.

SUSTAINABILITY

A summary of the Village's Climate Action Plan (CAP) action items as it relates to the development proposal can be found in the attached Sustainability Addendum, which goes into further detail on CAP items that are relevant to the Subject Property and the proposed plan. The Applicant has provided response to each applicable CAP item, which is attached with the material submitted by the Applicant.

ZONING RELIEF

Special Permit

The Applicant is requesting approval for a child daycare facility as a special permit in O-3/Techny Overlay District. The details of the use have been discussed above. The Plan Commission and Board of Trustees must consider the general standards for special permit established in Paragraph 11-602 E1 of the Zoning Code when deciding whether to grant the requested special permit. These standards include the following:

1) Is the proposal in compliance with the Zoning Code and Official Comprehensive Plan?
2) Will there be any adverse impact upon adjacent properties?
3) Will the proposed use interfere with the orderly development of adjacent properties?
4) Are there adequate public facilities to serve the development?
5) Will the use cause undue traffic congestion?
6) Will the development cause loss of significant environmental or historical features?
7) Will the use comply with other applicable Village standards?

Several of the above criteria are of particular importance in considering whether or not a special permit should be granted for the proposed use, specifically standards 2 & 5. The Applicant has included a statement of justification with their application addressing the above points.

The Applicant has stated that their use will support the employees of Crate & Barrel and the surrounding community and will be housed within the existing building with no exterior building alterations. The exterior play area will be graded appropriately to tie into the existing drainage system.

The Applicant has also stated that there will be no traffic congestion since the majority of the parents will remain on campus through-out the day. There will be no drop-off/pick-up allowed curb-side and there will be signage within the fire lane, instead the parents/guardians will be required to park within the parking lot at all times and accompany children, in and out of the facility.

SUMMARY

In reviewing this request, staff suggests the Plan Commission consider the following policy questions:

1) Is the proposed child daycare use appropriate on the Subject Property?
2) Is it acceptable to grant a special permit for a child day care on the Subject Property in the O-3/Techny Overlay District?
    a) If so, should there be any operational limitations?
3) Is the proposed outdoor play area in an appropriate location with acceptable layout and adequate screening?

Upon direction from the Plan Commission, staff has prepared the attached draft resolution for consideration by the Commission. If the Commission should choose to amend and/or take action on this resolution, it would be **Resolution No. 25-PC-17.**

The Applicant and staff will attend the September 30, 2025 Plan Commission meeting to answer any questions.

MEMORANDUM

To: Plan Commission
From: Kate Carney, Sustainability Coordinator
cc: Amy McEwan, DPS Director
Date: September 30, 2025
Subject: PCD-25-11: 1250 Techny – Crate and Barrel – Child Day Care – Sustainability Addendum to Staff Report

Northbrook's Climate Action Plan (CAP) calls to foster sustainability and reduce 80% of community-wide carbon emissions by 2050 through strategic planning and action item implementation. With CAP adoption, development proposals are reviewed with respect to best environmental practices.

Village staff provided Sustainability Comments in response to all submittals for the proposed planned development solely regarding applicable measures from the CAP. Under each section are a list of Climate Action Plan items as they relate to the proposed development. Staff confirms the proposed project partially addresses CAP items requested of the Applicant.

Of the items presented to the Applicant 75% were fully realized according to CAP standards, to the extent detailed *below in italics*.

Transportation and Land Use
In the Transportation and Land Use section of the CAP, recommendations are made to enhance active mobility and fossil fuel-free transit:

TL 5- 8 Consider installing EV charging stations in new designated parking spots. If this will not be realized, consider including capabilities for future electric vehicle charging installation. This could include conduit, wiring, electrical service panels, and power capacity near parking areas, terminated in outlets or junction boxes to meet demand for at least 2 EV charging ports.

Applicant Response: All existing EV charging stations provided on site by Crate and Barrel will remain, no new EV charging stations are planned, but we do have the capabilities to expand.

TL 7- 1 The Village has enacted a ban on gas powered leaf blowers – ensure compliance on site.

Applicant Response: Crate and Barrel complies.

Buildings and Energy
The Building Energy section of the CAP provides the following items pertaining to reducing our community-wide carbon footprint and preserving wildlife:

BE 4- 1 Consider green power purchase options such as those provided by ComEd and Nicor.

Applicant Response: Crate and Barrel currently purchases green-e RECs through a company called 3-degrees, which covers the electrical consumption of all our locations.

BE 5- 1 Explore opportunities for the property to utilize smart lights that can save energy through conservation. Achieve 100% LED installation if possible.

Applicant Response: Any additional lighting will be LED.
BE 5- 4 Require purchase and installation of ENERGY STAR appliances when available.

Applicant Response: Crate and Barrel agrees.

Waste Management
The CAP points to procedures that may facilitate waste reduction (with a goal of at least 50% landfill wasted diverted by 2030) in its Waste Management section:

WM 2- 5 Assure compliance with the Cook County Construction & Demolition Debris Diversion Ordinance and encourage contractors and subcontractors to exceed minimum requirements where applicable.

Applicant Response: Crate and Barrel will comply and will encourage.

Water and Wastewater
In the Water and Wastewater category, the CAP states to prioritize mitigating stormwater before it enters the sewer system through multiple capture techniques:

WW 1- 1 Consider landscaping practices that reduce water consumption and chemical use on site.

Applicant Response: Crate and Barrel will explore.

WW 1- 2 Reduce landscaping water use with water-efficient irrigation systems, grass replacement, and planting native and drought-resistant trees and vegetation in landscaping plans.

Applicant Response: Crate and Barrel plans to plant only native and drought-resistant trees and vegetation in landscaping areas.

WW 3- 3 Reduce or offset impervious surfaces where possible and consider use of lighter colored pavements and building materials to lessen the impact of urban heat island effect.

Applicant Response: Crate and Barrel will take all actions possible to lessen impact of urban heat island effect.

Greenspace and Ecosystem Health
The Plan's Greenspace category includes the following for expansion of tree canopy coverage, transforming beneficial lawns, and mitigation of heat island impacts:

GS 2- 5 Consider including exterior lighting design a policy to protect native plants, species, biodiversity, and improve night sky quality.

Applicant Response: Existing site lighting will remain as-is.

GS 2- 7 Consider eliminating neonicotinoids and reduce use of long-lasting chemical pesticides for landscaping, if applicable.

Applicant Response: We will contact our landscaping provider and ensure we are in compliance.

GS 4- 8 Consider utilizing shade and water absorbing trees and replacing turf landscaping with native prairie, wild flower, and savanna plantings.

Applicant Response: Crate and Barrel agrees and plans to include wildflower areas.

DRAFT

RESOLUTION NO. 25-PC-__

VILLAGE OF NORTHBROOK PLAN COMMISSION
DOCKET NO. PCD-25-11
(1250 TECHNY ROAD)

WHEREAS, an application has been filed by Euromarket Designs Inc. d/b/a Crate & Barrel (the "Applicant") as lessee of the property commonly known as 1250 Techny Road (the "Subject Property), which is owned by Parcel NC-1A/NC-1B LLC (the "Owner"), and

WHEREAS, the Applicant has filed an application (Docket No. PCD-25-11) with the Village of Northbrook requesting:

A. Special Permit for Child Day Care Services (SIC No. 8351.00) in the O-3 General Office/Techny Overlay District; and
B. Approval of any such variations, waivers, and zoning relief as may be necessary to accomplish development and use of the Subject Property as requested by the Applicant.

WHEREAS, the Subject Property is designated as appropriate for Professional Office uses in the Village of Northbrook Comprehensive Plan; and

WHEREAS, a public notice for this docket was duly published on August 28, 2025 in the *Northbrook Star* and a public hearing was scheduled for September 16, 2025, but due to a lack of quorum the meeting was continued and held at a special meeting of the Plan Commission on September 30, 2025; and

WHEREAS, the Applicant has submitted evidence that signs were properly posted on the Subject Property, indicating the time and date of the Commission hearing, and that all property owners within 250 feet of the Subject Property were notified of the Commission hearing by certified mail; and

WHEREAS, the Plan Commission has considered all the evidence presented to it, including, but not limited to, the following:

1. Village of Northbrook Plan Commission Application form & attachments received August 5, 2025, and all subsequent additions and revisions to these application materials and attachments.
2. Comments made by the Board of Trustees during its review of the preliminary application regarding this request.
3. All written and oral testimony concerning the application.

NOW, THEREFORE, BE IT RESOLVED by the Plan Commission of the Village of Northbrook, Cook County, Illinois, THAT:

1. <u>Findings</u>:

A. <u>Comprehensive Plan Compliance</u>. The Northbrook Plan Commission does hereby find that with respect to Docket No. PCD-25-11 the proposed application **is in general compliance** with the Northbrook Comprehensive Plan, and specifically in compliance with the Future Land Use Map.

B. <u>Special Permit</u>. With respect to Docket No. PCD-25-11A, the Plan Commission does hereby find that the Special Permit standards established in Paragraph 11-602 E1 of the Zoning Code, for the proposed child daycare facility (the "Facility"), are **satisfied** as follows:

1) The Facility will be in harmony with the general and specific purposes for which this Code was enacted and for which the regulations of the O-3 General Office/ Techny Overlay District were adopted, and with the general purpose and intent of the Official Comprehensive Plan.

2) The Facility will not have a substantial or undue adverse effect upon adjacent property, the character of the area or the public health, safety and general welfare.

3) The Facility will be arranged and operated so as not to dominate the immediate vicinity or to interfere with the use and development of neighboring property.

4) The Facility will be served adequately by essential public facilities and services.

5) The Facility will not cause undue traffic congestion nor draw significant amounts of traffic through residential streets.

6) The Facility will not result in the destruction, loss or damage of natural, scenic or historic features of significant importance.

7) The Facility complies with all additional standards imposed on it by the particular provisions of the Zoning Code authorizing such use.

C. Other Relief. With respect to Docket No. PCD-25-11B, the Plan Commission does hereby find that no other relief is necessary.

2. Recommendations: The Northbrook Plan Commission does hereby recommend to the Board of Trustees of the Village of Northbrook **approval** of Docket No. PCD-25-11 based on the findings established herein, to allow a Special Permit for Child Day Care Services (SIC No. 8351.00) to be issued to the Applicant for the Subject Property.

ADOPTED THIS __ day of September 2025.

AYES: ()

NAYS: ()

ABSENT: ()

ABSTAIN: ()

_____
Steven Elisco, Chairman
Northbrook Plan Commission

ATTEST:

_____
Amy McEwan, Director
Development and Planning Services

PCD-25-11: 1250 TECHNY ROAD
APPLICATION SUMMARY

Applicant:	Euromarket Designs Inc. d/b/a Crate & Barrel
Site Location:	1250 Techny Road
Requested Action:	Special Permit for Child Daycare Services in O-3/Techny Overlay District
Proposal:	Allow a child daycare on the first floor in the existing office building.
Existing Zoning & Land Use:	O-3 General Office/Techny Overlay District; Crate & Barrel HQ
Surrounding Zoning & Land Use:	North: O-3 General Office; Former Five Seasons South: R-6 Multiple Family Residential; Townhomes East: IB Institutional Building; House of Worship Property West: O-3 General Office & O-4 Boulevard Office; Office Complex
Comprehensive Plan Designation:	Office - Professional

ZONING MAP

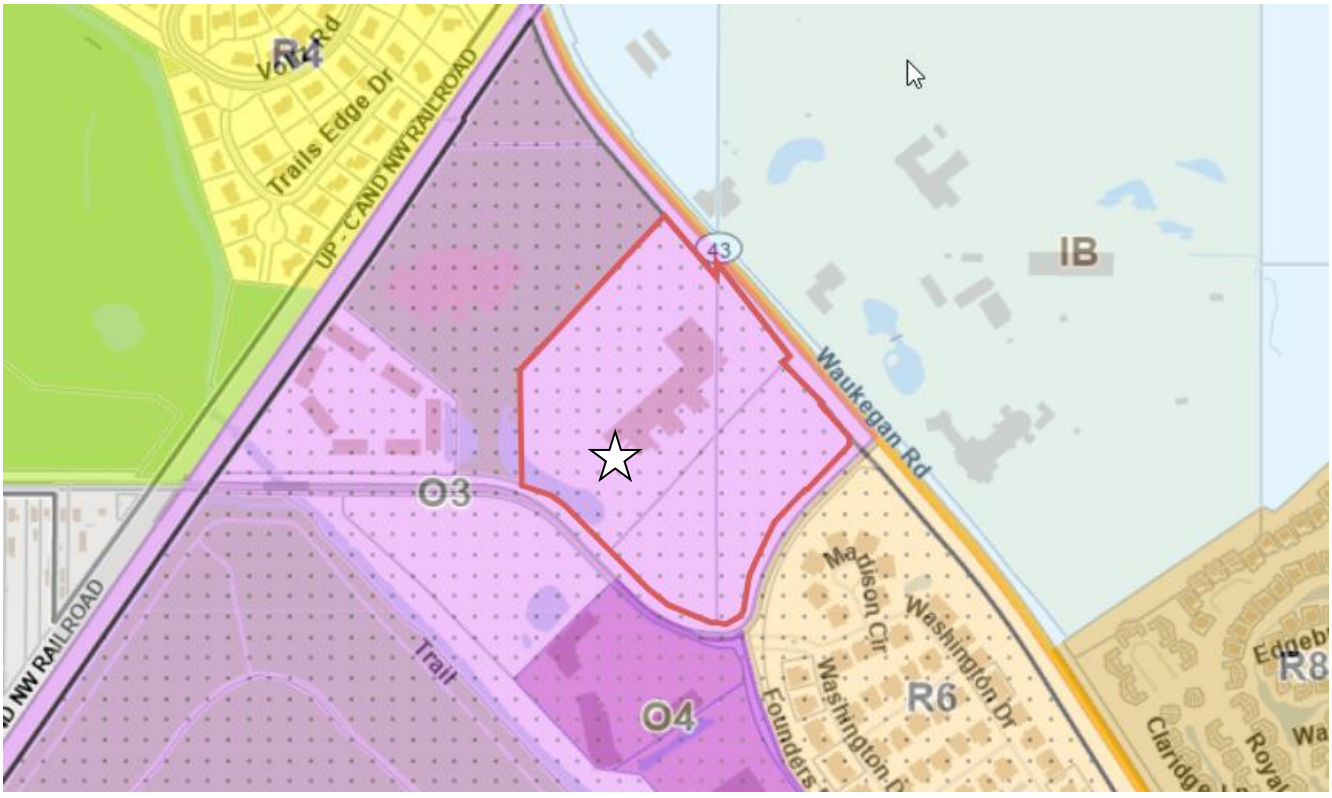

COMPREHENSIVE PLAN MAP



Legend

- Open Space & Outdoor Recreation
- Single Family
- Single Family Large Lot
- Multi-Family up to 6 DUA
- Multi-Family 6-9 DUA
- Multi-Family 9-15 DUA
- Multi-Family over 15 DUA
- Senior or Special Residential
- Government Facility
- Institutional Facility
- Neighborhood Office
- Neighborhood Edge 1
- Neighborhood Edge 2
- Office - Professional
- Office - Corporate/Corridor
- Community Retail
- Major Retail
- Industrial & Commercial Service
- General Industrial, Warehouse & Office
- Major Industrial/Distribution
- Transportation, Comm. & Utilities
- Village Center Mixed Use
- Techny Area Multi-Use
- Major Corridor Multi-Use
- Techny Area

GISConsortium | 1250 Techny Road

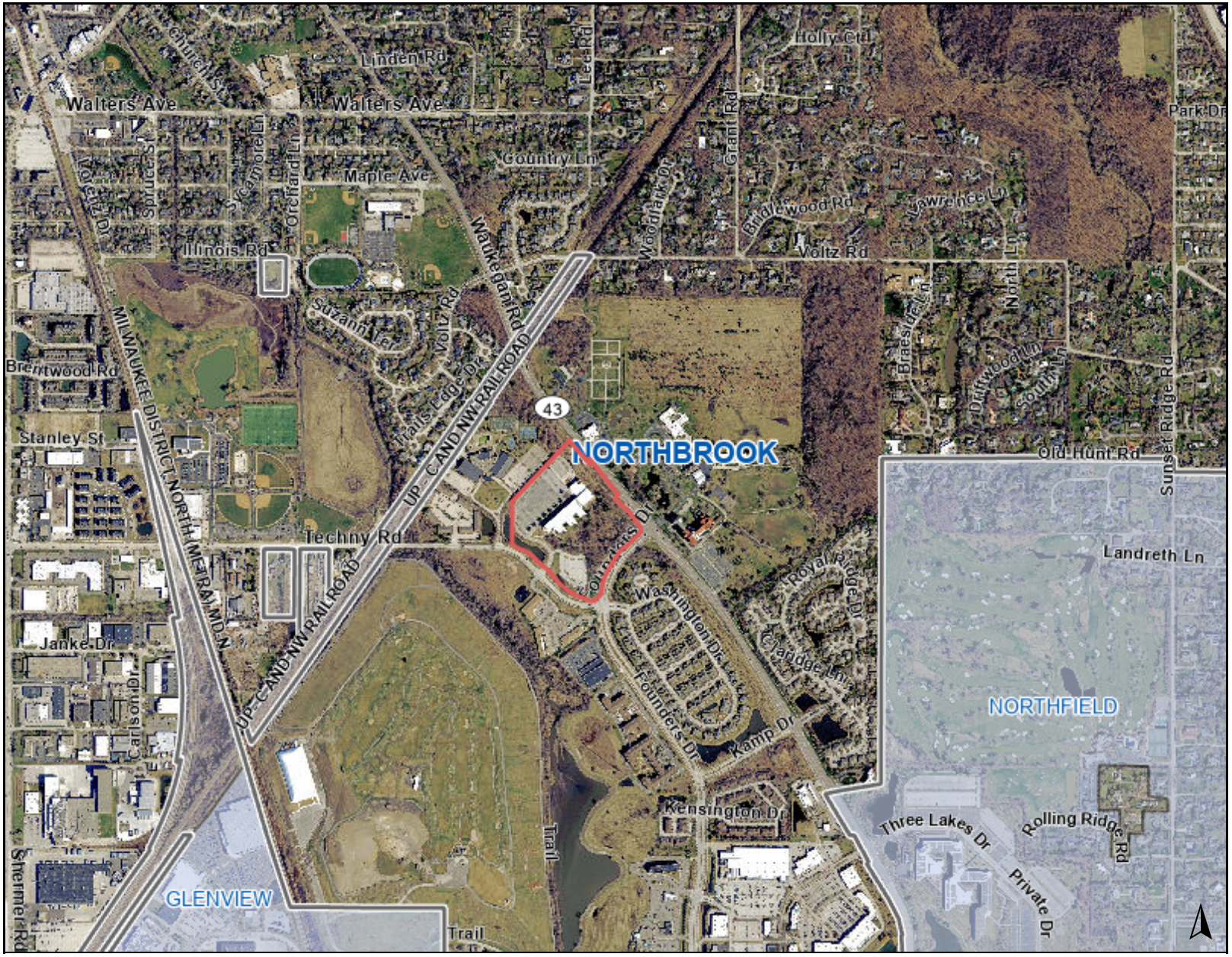

Legend

0 2000 4000 ft

Print Date: 6/23/2025

Notes

Disclaimer: The GIS Consortium and MGP Inc. are not liable for any use, misuse, modification or disclosure of any map provided under applicable law. This map is for general information purposes only. Although the information is believed to be generally accurate, errors may exist and the user should independently confirm for accuracy. The map does not constitute a regulatory determination and is not a base for engineering design. A Registered Land Surveyor should be consulted to determine precise location boundaries on the ground.

GISConsortium | 1250 Techny Road



Legend

0 500 1000 ft

Print Date: 6/23/2025

Notes

Disclaimer: The GIS Consortium and MGP Inc. are not liable for any use, misuse, modification or disclosure of any map provided under applicable law. This map is for general information purposes only. Although the information is believed to be generally accurate, errors may exist and the user should independently confirm for accuracy. The map does not constitute a regulatory determination and is not a base for engineering design. A Registered Land Surveyor should be consulted to determine precise location boundaries on the ground.


1250 Techny Road - Crate & Barrel HQ Building – Southwestern Entrance









Village Board of Trustees Minutes

Sandra "Sandy" Frum Board Room
1225 Cedar Lane Northbrook, IL 60062
Tuesday, July 8, 2025

Village President Kathryn Ciesla called the meeting to order at 7:30 PM

1. **ROLL CALL**

Attendee Name	Title	Status
Kathryn Ciesla	Village President	Present
Robert Israel	Trustee	Present
Heather Ross	Trustee	Present
Johannah Hebl	Trustee	Present
Joy Ebhomielen	Trustee	Present
Michelle Kohler	Trustee	Present
Matt Cassidy	Trustee	Present

2. **PLEDGE OF ALLEGIANCE**

3. **MINUTES APPROVAL**

A. June 22, 2025 Regular Board Meeting Minutes for Approval

RESULT:	**APPROVED [6 – 0]**
MOVER:	Johannah Hebl, Trustee
SECONDER:	Heather Ross, Trustee
AYES:	Israel, Ross, Hebl, Ebhomielen, Kohler, Cassidy
NAYES:	None
ABSTAIN:	Kathryn Ciesla, President
ABSENT:	None

4. **PUBLIC COMMENT TIME** - None

5. **MANAGER'S REPORT**

Village Manager Pavlicek mentioned that the West Nile virus has been detected in the area, residents are reminded to take precautions like using repellent, wearing protective clothing, and eliminating standing water.

Also, July is the time to renew vehicle stickers and pet tags, residents should renew online, by mail, or in person soon.

C. Preliminary Review of a Request by Crate and Barrel Holdings Inc. for a Special Permit for Child Daycare Facility at 1250 Techny Road (Crate and Barrel Corporate Office)

RESULT:	**MOVED TO REFER TO PLAN COMMISSION [6 – 0]**
MOVER:	Heather Ross, Trustee
SECONDER:	Robert Israel, Trustee
AYES:	Israel, Ross, Hebl, Ebhomielen, Kohler, Cassidy
NAYES:	None
ABSTAIN:	Kathryn Ciesla, President
ABSENT:	None

Amy McEwan, Director of Development and Planning Services, discussed an application submitted by Crate and Barrel Holdings Inc. for the property located at 1250 Techny Road. The applicant is requesting zoning relief to their existing Special Use permit to repurpose existing interior space for childcare purposes and an exterior play area.

She noted the requested relief/primary issues the Village Board should consider.

Trustee Ross asked if the childcare facility would serve non-employees and about impacts to heritage trees.

Director McEwan said both were considered, non-employee access is possible, and no heritage trees are affected.

Trustees Hebl, Israel, Ross, Ebhomielen, Kohler, and Cassidy spoke in support of application.

D. Preliminary Review of a Request by M&D Builders LLC for Annexation and Three-Lot Single-Family Subdivision at 608 - 610 Sanders Road

RESULT:	**MOVED TO REFER TO PLAN COMMISSION [6 – 0]**
MOVER:	Robert Israel, Trustee
SECONDER:	Heather Ross, Trustee
AYES:	Israel, Ross, Hebl, Ebhomielen, Kohler, Cassidy
NAYES:	None
ABSTAIN:	Kathryn Ciesla, President
ABSENT:	None

Amy McEwan, Director of Development and Planning Services, discussed an application submitted by M&D Builders LLC for Annexation and Three-Lot Single-Family Subdivision at 608 – 610 Sanders Road. The applicant is requesting zoning relief: annexation and rezone to R-6 District.

She noted the requested relief/primary issues the Village Board should consider.

Trustee Hebl asked about the detention easement, and Director McEwan confirmed it will be designated for detention only and is not buildable.

Trustee Israel asked about the lot size and previous evaluations of egress to Sanders Road, expressing concerns about traffic generation and access, which led to the original plan not being approved.

Archived: Wednesday, September 3, 2025 9:29:08 AM
From: Patti Helfand
Sent: Tuesday, September 2, 2025 3:53:55 PM
To: Pandey, Swati
Subject: Crate and Barrel proposal for childcare services
Response requested: Yes
Sensitivity: Normal

Beware External Email - Think Before You Act

I am a resident at Meadow Ridge on the corner of Founders Drive and Techny. I am curious to know if the Child care services are for Crate and Barrel employees
or if they will be open to others. My concern is the traffic.
Thank you
Patti Helfand

FORMAL APPLICATION – ZONING & SUBDIVISION RELIEF**

Prior to submitting this formal application, the matter must first be reviewed as a preliminary application by the Village Board of Trustees. If the Board has not yet reviewed your preliminary application, please contact the Department of Development & Planning Services to learn what is required. The following materials are the minimum required for the processing of a formal application by the Village of Northbrook's Plan Commission and Board of Trustees. A public hearing or public meeting for an application will not be scheduled until all required materials have been submitted and revised as necessary to meet Code requirements, as determined by Village staff. If you have questions regarding the completion of this application please contact the Development & Planning Services Department at 847-664-4050.

Applications for zoning relief from the Zoning Board of Appeals must use a different application form.

The initial submittal MUST contain:

☒ **1 electronic version (PDF)** of ALL application materials **(refer to application section regarding instructions).**

Applicant Information

Legal Name _____

_____

Company _____

Address [redacted]

City, State, Zip [redacted]

Phone No. [redacted]

Email [redacted]

Primary Contact Person

Name _____

Company _____

Address [redacted]

City, State, Zip [redacted]

Phone No. [redacted]

Email [redacted]

Consultants *(as applicable)*

Attorney

Name _____

Company _____

Address _____

City, State, Zip _____

Phone No. _____

Email _____

Architect/Planner

Name Alex Wilkosz

Company _____

Address [redacted]

City, State, Zip [redacted]

Phone No. [redacted]

Email [redacted]

Civil Engineer

Name _____

Company _____

Address [redacted]

City, State, Zip [redacted]

Phone No. [redacted]

Email [redacted]

Other

Name _____

Company _____

Address _____

City, State, Zip _____

Phone No. _____

Email _____

Property Information *(if more than one parcel is involved in the request please include the information for all parcels)*

Site Location/Address: 1250 Techny Road

Property Index Numbers: 04152000200000, 04141000320000, 04152000210000, 04141000330000

Size of Property: 23.535 acres (square feet/acres)

Size of Building Space, if applicable: 6,200 square feet (square feet)

Comprehensive Plan Land Use Designation[1]: Techny Area/Office - Professional

Current Zoning: O3 General Office

Current Use of the Property: Office

Is any portion of the property within the 100-year floodplain?[1] Yes: _____ No: X

Requested Action(s) *(check all that are applicable)*

- ☐ Comprehensive Plan Amendment
- ☐ Annexation (*separate form required*)
- ☐ Rezoning from _____ to _____
- ☒ Special Permit for a daycare for EDI employees and local community
- ☐ Renewal of Special Permit Ord. No. _____
- ☐ Amendment to Existing Special Permit Ord. No. _____
- ☒ Site Plan Approval
- ☐ Zoning Code Text Amendment
- ☐ Zoning Variation (in conjunction with other relief) for _____
- ☐ Planned Development - Concept Plan
- ☐ Planned Development - Final Plan
- ☐ Subdivision - Tentative Plat
- ☐ Subdivision - Final Plat
- ☐ Subdivision - Variations/Waiver for _____
- ☐ Exception for _____
- ☐ Other _____

☒ **Plat of Survey & Parcel Legal Description(s)**

Attach the most recent plat of survey of the Subject Property, certified by a registered land surveyor, showing existing lot lines and dimensions, lot area, all easements, all public and private rights-of-way, and all streets across and adjacent to the subject property.

☒ **Conformity with Comprehensive Plan**

Include a written statement explaining the conformity, or lack of conformity, of the approval being requested to the Village's Official Comprehensive Plan and Official Map. Where the approval being requested does not conform to the Official Comprehensive Plan or Official Map, provide reasons justifying the requested approval.

☒ **Surrounding Property Owners Addresses**

Please attach the names and mailing addresses of all property owners of record (not tenants) within 250 feet of the property, excluding public rights-of-way, based on current County tax records. See page10 of this document for instructions on how to obtain the addresses.

[1] As found on the Village website www.northbrook.il.us/Government/Departments/Planning/GIS/index.php

Site Ownership and Control

Current Property Owner Information

Legal Name: Euromarket Designs Inc.

Primary Contact:
Address [redacted]
City, State, Zip [redacted]
Phone No. [redacted]
Email [redacted]

Proposed Property Owner Information

Legal Name: No Change

Primary Contact:
Address
City, State, Zip
Phone No.
Email

Attach a copy of a title policy or deed showing current ownership of the property. If property is held in a trust, also include a certified copy of the trust agreement or a simple affidavit (under oath before a notary) as to who are the beneficiaries of the trust. *(Check which document(s) are attached):*

- ☐ Deed
- ☐ Title Policy or Title Commitment ***(Required for Subdivision Applications & Plats of Consolidation Applications)***
- ☐ Certified Copy of Trust Agreement OR a simple Affidavit Identifying Trust Beneficiaries

☒ **Complete Attachment A, listing all individuals/entities that have a beneficial interest in the legal entity that currently owns the property**

☒ **Complete Attachment B, listing all individuals/entities that have a beneficial interest in the legal entity that is proposed to own the property upon receiving necessary approvals.**

Applicants Involvement with the Property

If the Applicant does not own the property, please also provide documentation showing the applicant's interest in the property *(Check which document is attached. The dollar amounts in documents may be blacked-out)*:

- ☐ Owner (see the previous box)
- ☐ Real Estate Contract
- ☒ Lease
- ☐ Other _____

☐ **Complete Attachment C, listing all individuals/entities that have a beneficial interest in the legal entity that is the Applicant.**

Additional Required Attachment(s)

Submit all relevant attachments specified in the below worksheet(s) that correspond with your application request(s) selected on page two of this application; the worksheets can be found on the Village of Northbrook website www.northbrook.il.us, as well as in the Community Planning Department in the Village Hall. *(Check all that are applicable)*

- ☐ Comprehensive Plan Amendment Worksheet
- ☐ Annexation Worksheet
- ☐ Rezoning Worksheet
- ☒ Special Permit Worksheet
- ☒ Site Plan Approval Worksheet
- ☐ Zoning Code Text Amendment Worksheet
- ☐ Zoning Variation Worksheet
- ☐ Planned Development Worksheet- Concept Plan
- ☐ Planned Development Worksheet- Final Plan
- ☐ Subdivision Worksheet – Tentative Plat
- ☐ Subdivision Worksheet - Final Plat
- ☐ Subdivision Worksheet - Variations/Waiver
- ☐ Zoning Exception Worksheet
- ☐ Condominium Conversion Worksheet
- ☐ Plat of Consolidation Worksheet

Filing Fees

All applications require payment of a non-refundable fee, as well as additional funds that are held in escrow to off-set anticipated recoverable expenses. Please attach a check with your application and indicate below the amount of the fee submitted. A copy of the fee schedule is attached to the application form.

$ 250 Amount of Non-Refundable Fee

$ 4,000 Amount of Escrow

$ 4,250 Total Application Fee (Non-Refundable Fee plus Escrow)

The escrow covers such items as Village attorney time (currently billing at approx. $400.00 per hour), public notice expenses, public meetings ($50.00 per mtg), & staff review time. If these expenses exceed the initial escrow deposit, the applicant is responsible for additional payment to the Village prior to completing approval process. If the expenses are less than the escrow deposit, the applicant will be issued a refund.

Northbrook Ethics Code *(potential conflicts of interest)*
On a separate sheet of paper list the name, address, nature, and extent of any current or potential interest that any Village officer or employee may have in, or with respect to the owner, the applicant, or the property. **If none, check here:** X
(For more information, see Sections 2-71 through 2-85 of the Northbrook Municipal Code located on our website, or pick-up a copy of the Northbrook Ethics Code booklet in the Development & Planning Services Department at the Village Hall)

Repeat Application

Has any other application for this property been submitted to the Village and denied within the last two years?
___ yes _X_ no (check one)
If yes, attach a statement of the grounds justifying reconsideration (See Zoning Code Sec. 11-302).

Applicant/Owner Acknowledgments

By execution of this application in the space provided below, the Applicant and Owner(s) do hereby certify, acknowledge, agree and affirm to the Village of Northbrook that:

1. The Village and its representatives have the right, and are hereby granted permission and license, to enter upon the property, and into any structures located thereon, for purposes of conducting any inspections that may be necessary in connection with this application.

2. I (We) have carefully read this application, the Northbrook Zoning Code and Northbrook Subdivision & Development Code and fully understand the terms and provisions of each.

3. I (We) waive any rights to exemption from disclosure under the Illinois Freedom of Information Act of any and all documents and information submitted in connection with this application.

4. I (We), in accordance with the requirements of the Annual Fee Ordinance, the Northbrook Zoning Code and the Northbrook Subdivision & Development Code, agree to pay all applicable filing fees and be responsible for the payment of all reimbursable expenses associated with the processing of this application.

Applicants may attach additional materials or exhibits to this application if necessary or helpful in explaining the relief requested.

Signature of Applicant: _____ **Date** 4 AUG 2025
Print Name & Title: ANTHONY J GARIPPO / SVP REAL ESTATE & CONSTRUCTION
Signatures of Property Owner(s): Bro Matthew Zemel, SVP **Date** Aug 4, 2025
Print Name & Title: Br. Matthew Zemel, SVP ~~President~~ **Property Address:** 1250 TECHNY RD
****If more than one applicant or property owner, please copy this page and have additional applicants/property owners sign form.**

Note: Village review and approval of rezoning, special permit, and subdivision applications may be dependent upon the Applicant first receiving necessary approvals from State and County regulatory agencies such as, but not limited to, the Illinois Department of Transportation, Illinois Environmental Protection Agency, the Metropolitan Water Reclamation District of Greater Chicago, & the Cook County Highway Department.

ATTACHMENT A: Current Property Owner – Beneficial Interest

Please check which of the following describes the current property owner's beneficial interest in the property and complete this sheet as instructed for each type of beneficial interest:

❑ Corporation	If **current property owner** is a corporation, please list the name and addresses of all officers and directors of the corporation and all shareholders who own individually or beneficially 5% or more of the stock of the corporation. In addition, this application must be accompanied by a resolution of the corporation authorizing the execution and submittal of this application.
☒ Partnership or LLC	If **current property owner** is a partnership or an LLC, please list all partners, general and/or limited, with an individual or beneficial interest of 5% or greater.
❑ Trust	If **current property owner** is a trust, please provide the trust number _____ and name and address of the Trustee _____ _____, as well as list below the names and address of all beneficiaries of the Trust, together with their respective interests in the trust. The application shall be further verified by the **current property owner** in his capacity as trustee or by the beneficiary as a beneficial owner of an interest in the Trust and the application shall be signed individually by as many beneficiaries as are necessary to constitute greater than 50% ownership of the beneficial interest of the Trust

Name: _____
_____
Address: _____
_____
Ownership or Trust Interest: _____ %

Name: _____
_____
Address: _____
_____
Ownership or Trust Interest: _____ %

Name: _____
_____
Address: _____
_____
Ownership or Trust Interest: _____ %

Name: _____
_____
Address: _____
_____
Ownership or Trust Interest: _____ %

Name: _____
_____
Address: _____
_____
Ownership or Trust Interest: _____ %

Name: _____
_____
Address: _____
_____
Ownership or Trust Interest: _____ %

ATTACHMENT B - Proposed Property Owner – Beneficial Interest

Please check which of the following describes the proposed property owner's beneficial interest in the property and complete this sheet as instructed for each type of beneficial interest:

❑ Corporation	If the **proposed property owner** is a corporation, please list the name and addresses of all officers and directors of the corporation and all shareholders who own individually or beneficially 5% or more of the stock of the corporation. In addition, this application must be accompanied by a resolution of the corporation authorizing the execution and submittal of this application.
❑ Partnership or LLC	If **proposed property owner** is a partnership or an LLC, please list all partners, general and/or limited, with an individual or beneficial interest of 5% or greater.
❑ Trust	If **proposed property owner** is a trust, please provide the trust number _____ and name and address of the Trustee _____ _____, as well as list below the names and address of all beneficiaries of the Trust, together with their respective interests in the trust. The application shall be further verified by the **proposed property owner** in his capacity as trustee or by the beneficiary as a beneficial owner of an interest in the Trust and the application shall be signed individually by as many beneficiaries as are necessary to constitute greater than 50% ownership of the beneficial interest of the Trust

Name: NO CHANGE

Address: _____

Ownership or Trust Interest: _____ %

Name: _____

Address: _____

Ownership or Trust Interest: _____ %

Name: _____

Address: _____

Ownership or Trust Interest: _____ %

Name: _____

Address: _____

Ownership or Trust Interest: _____ %

Name: _____

Address: _____

Ownership or Trust Interest: _____ %

Name: _____

Address: _____

Ownership or Trust Interest: _____ %

ATTACHMENT C - Applicant – Beneficial Interest

Please check which of the following describes the beneficial interest in the legal entity that is the applicant and complete this sheet as instructed for each type of beneficial interest:

☒ Corporation	If **applicant** is a corporation, please list the name and addresses of all officers and directors of the corporation and all shareholders who own individually or beneficially 5% or more of the stock of the corporation. In addition, this application must be accompanied by a resolution of the corporation authorizing the execution and submittal of this application.
☐ Partnership or LLC	If **applicant** is a partnership or an LLC, please list all partners, general and/or limited, with an individual or beneficial interest of 5% or greater.
☐ Trust	If the **applicant** is a trust, please provide the trust number _____ and name and address of the Trustee _____ _____, as well as list below the names and address of all beneficiaries of the Trust, together with their respective interests in the trust. The application shall be further verified by the **applicant** in his capacity as trustee or by the beneficiary as a beneficial owner of an interest in the Trust and the application shall be signed individually by as many beneficiaries as are necessary to constitute greater than 50% ownership of the beneficial interest of the Trust

Name: _____

Address: [redacted]

Ownership or Trust Interest: _____ %

Name: _____

Address: [redacted]

Ownership or Trust Interest: _____ %

Name: _____

Address: [redacted]

Ownership or Trust Interest: _____ %

Name: _____

Address: [redacted]

Ownership or Trust Interest: _____ %

Name: _____

Address: [redacted]

Ownership or Trust Interest: _____ %

Name: _____

Address: [redacted]

Ownership or Trust Interest: 100 %

SPECIAL PERMIT WORKSHEET

In addition to submitting the *Formal Application* form for a special permit application, the Applicant must include the following information with your application. A public hearing for an application will not be scheduled until all required materials have been submitted and revised as necessary to meet Code requirements, as determined by Village staff. All of the required application materials must be submitted to the Department of Development & Planning Services.

The initial submittal MUST contain:

☒ **1 electronic version (PDF)** of all application materials submitted in a format as described on the last page of the Formal Application form.

REQUIRED MATERIALS FOR SUBMISSION

- **Written Explanation of Application Request**
  Attach a written statement explaining the proposed application. This letter should include the following applicable items, as well as any other pertinent detailed information pertaining to the request: hours of operation, number of employees, number of existing parking spaces on site, if the building has multiple tenants please list what the other tenant businesses are, if any existing buildings are being demolished, will the site be reconfigured, and if there will there be any included outdoor activity or uses.

- **Standard Industrial Classification Number & Description**
  Include on the line provided below the SIC (Standard Industrial Classification) number and description for the requested Special Permit Use. This number and description can be found in the Village of Northbrook Zoning Code or by contacting the Development & Planning Department. Every use contains a related SIC number and description.
  SIC Number & Description: 8351.00 Child Day Care Services, ICS: S

- **Visual Representation of Special Permit Request**

  ☐ **Applications without Site Improvements Include: Graphic Depiction of Application Request**
  Attach a graphic depiction of the following, as appropriate, to illustrate the proposed special permit being requested:
    - parking information (location of spaces in relation to use;)
    - general floor plan;
    - building elevations (if the exterior is to be modified);
    - proposed exterior signs.

  -or-

  ☒ **Applications with Site Improvements Include: Site Plan Approval Worksheet Requirements**
  If the requested Special Use Permit application involves any site modifications (i.e. construction or renovation of any structure(s), addition or expansion of a parking lot, relocation of driveway(s), removal or addition of trees, etc.) the Applicant must also submit a **Site Plan Approval Worksheet**.

REQUIRED MATERIALS FOR SUBMISSION *(continued)*

- **Statement of Justification**

A written statement of need for the requested special permit is required. The statement should address each of the below Standards for Special Permit Applications established in Subsection 11-602 E of the Zoning Code and listed below. The staff, Plan Commission and Board of Trustees will use these standards in making a determination whether or not the proposed activity is appropriate. ***Please complete the below form (use additional paper if needed) and submit this form with the Formal Application. Please provide detailed responses for each item. Do not merely state for instance for Item (b) that "Our proposed project will not have substantial or undue adverse effect……" You must state what specifically about your project will not have undue adverse effect.***

(a) Code and Plan Purposes. The proposed use and development will be in harmony with the general and specific purposes for which this Code was enacted and for which the regulations of the district in question were established and with the general purpose and intent of the Official Comprehensive Plan.

The child daycare center will support the community and provide an exterior play area that respects the existing landscape by utilizing native plat species and a muted color palette for furnishings.

(b) No Undue Adverse Impact. The proposed use, drainage and development will not have a substantial or undue adverse effect upon adjacent property, the character of the area or the public health, safety and general welfare.

The exterior play area was be graded to tie into the existing drainage system. It will be fenced and will use plantings and rock outcroppings to serve as a barrier from vehicular traffic. A speed table crosswalk will be provided between the parking lot and sidewalk.

(c) No Interference with Surrounding Development. The proposed use and development will be constructed, arranged and operated so as not to dominate the immediate vicinity or to interfere with the use and development of neighboring property in accordance with the applicable district regulations.

The child daycare center will be housed within the existing building with no exterior building alterations. Landscape and site furnishings will match and compliment those of the existing area.

(d) Adequate Public Facilities. The proposed use and development will be served adequately by essential public facilities and services such as streets, public utilities, drainage structures, police and fire protection, refuse disposal, parks, libraries, and schools, or the applicant will provide adequately for such services.

The child daycare center will not impact essential public facilities and services.

(e) No Traffic Congestion. The proposed use and development will not cause undue traffic congestion nor draw significant amounts of traffic through residential streets.

The child daycare center will support the employees of Crate&Barrel and the surrounding community. The majority of parents using the facility will remain on the campus throughout the day.

(f) No Destruction of Significant Features. The proposed use and development will not result in the destruction, loss or damage of natural, scenic or historic feature of significant importance.

There will be no destruction to any significant features. All landscape modifications will comply with the village's tree preservation ordinances.

(g) Compliance with Standards. The proposed use and development complies with all additional standards imposed on it by the particular provision of this Code authorizing such use.

The child daycare center is in compliance with standards.

COMPLIANCE WITH VILLAGE REGULATIONS

All applications will be reviewed to determine compliance with the following Village codes and regulations:

- Zoning Code
- Subdivision & Development Code
- Standards and Specifications Manual
- Tree Protection and Tree Preservation Ordinance
- Existing Conditions
- Restrictive Covenants
- Development Agreements
- All other applicable Village codes and regulations

The applicant is responsible for ensuring a submitted application includes all of the necessary submittal requirements and meets all applicable standards and requirements of the Village codes.

Village Departments Involved with the Review of Community Planning Applications

- Development & Planning Services
- Fire
- Police
- Public Works and Engineering
- Village Attorney

SOCIETY OF THE DIVINE WORD
TECHNY LAND CORPORATION NFP
[redacted]
RESIDENTIAL MIXED-USE RETAIL COMMERCIAL OFFICE OPEN SPACE

June 10, 2025

Village of Northbrook
1225 Cedar Lane
Northbrook, IL 60062
Attn: Amy McEwan, Director

Re: Approval for Text Amendment to Zoning Code – Crate & Barrel

To whom it may concern:

As you may know, Parcel NC-1A/NC-1B LLC ("**Ground Lessor**") is the owner of the real property commonly known as Techny Parcel NC-1A and Parcel NC-1B, which has a street address of 1250 Techny Road, Northbrook, Illinois 60062 (the "**Property**"). Techny Land Corporation, NFP ("**TLC, NFP**") is the sole member of the Fee Owner.

The Ground Lessor has ground leased the Property to Feiga/Cimmaron Northbrook, LLC ("**Ground Lessee**") pursuant to a ground lease dated as of April 10, 2000 (as amended, the "**Ground Lease**"). Ground Lessee has in turn subleased the Property to Euromarket Designs, Inc. (doing business as Crate & Barrel) ("**Subtenant**") pursuant to a Lease Agreement dated November 11, 2005.

Subtenant uses the Property as its corporate headquarters. We understand that Subtenant would like to renovate a portion of its headquarters building to construct a day care facility to serve the needs of its employees and other members of the public (the "**Day Care Center Initiative**"). Ground Lessor and TLC, NFP support the Day Care Center Initiative. Without waiving any of its rights under the Ground Lease, Ground Lessor hereby approves Subtenant's request for a Zoning relief request for SIC No. 8351.00 Child Day Care Services in the O-3 General Office/Techny Overlay District.

Please let us know if there are any questions or if additional information is needed.

Sincerely,

PARCEL NC-1A/NC-1B LLC,
an Illinois limited liability company

By: Br. Mathew Zemel, SVD
Br. Mathew Zemel, S.V.D., President

Doc ID

FEIGA/CIMARRON NORTHBROOK, LLC
C/O BLDG Management Co., Inc.
[redacted]

May 6, 2025

Village of Northbrook
1225 Cedar Lane
Northbrook, IL 60062
Attn: Amy McEwan, Director

Re: Approval for Text Amendment to Zoning Code

To whom it may concern:

The undersigned ("Sublessor") owns a ground leasehold interest in the property located 1250 Techny Road, Northbrook, Illinois 60062 (the "Property") and has sub-leased the entirety of the Property to Euromarket Designs, Inc. doing business as Crate and Barrel ("Subtenant") pursuant to a Lease Agreement dated November 11, 2005 (as amended, the "Sublease"). Subtenant uses the Property as its corporate headquarters and would like to renovate a portion of the building to construct a day care facility to serve the needs of its employees and other members of the public (the "Day Care Center Initiative"). Without waiving any of Sublessor's rights under the Sublease, Sublessor supports the Day Care Center Initiative and hereby approves Subtenant's request for Zoning relief request for SIC No. 8351.00 Child Day Care Services in O-3 General Office/Techny Overlay District.

Please let us know if there are any questions or additional information needed.

Sincerely,

FEIGA/CIMARRON NORTHBROOK, LLC,
a Delaware limited liability company

By: _____
Name: Justin B. Kleinman
Title: Authorized signatory

July 23, 2025

Euromarket Designs, Inc. d/b/a Crate & Barrel, Crate&kids, CB2, and Hudson Grace
1250 Techny Road
Northbrook, IL 60062
Attention: Anthony Garippo, SVP

VIA EMAIL: agarippo@crateandbarrel.com

RE: Child Care Center Development and Management Agreement

Mr. Garippo:

The purpose of this letter of intent (this "LOI") is to acknowledge and agree that Bright Horizons Children's Centers LLC ("Bright Horizons") and Euromarket Designs, Inc. ("Euromarket") are in the process of negotiating a Child Care Center Development and Management Agreement ("Agreement") for the development and operation of a child care center at Euromarket's location in Northbrook, Illinois (the "Center").

The parties anticipate finalizing the Agreement in the coming weeks. To signify your acknowledgement of the project and the continuing negotiations of the Agreement, please sign below and return one copy to my attention at: diane.mills@brighthorizons.com. We look forward to serving Euromarket's families for many years to come.

Sincerely,

/s/

Diane S. Mills
Managing Senior Counsel

AGREED AND ACKNOWLEDGED

By: _____
Name: _____
Title: _____
Date: _____

Cc: Christine DeLair
Director, Client Services

Final Application
Zoning & Subdivision Relief
Narrative Explaining Request
Crate and Barrel Daycare

Crate and Barrel Holdings, Inc, dba Crate and Barrel proposes to include a Daycare Center for our associates within its global headquarters located at 1250 Techny Road, Northbrook IL. Our HQ building is 167,000 sf and includes offices, merchandise areas as well as the amenities of a cafe and fitness center. The Daycare Center would displace a small portion of our office area.

The purpose of the Daycare Center is to enhance our culture and ease the difficult burden of finding safe, affordable daycare with open capacity close to work in the Northbrook community. Given the current constraints on daycare availability in the surrounding area, we are at risk of employees not returning back to work.

Our aim is to create a facility of approximately 6200 sf to accommodate up to 62 children on the Garden Level of our building, with access from the southwestern entrance. We plan to enter into an agreement with Bright Horizons as the operational partner, which also manages the Northbrook Child Care Center (NCCC) at Techny. The daycare center will comply with all DCFS requirements.

Initially, the daycare will be offered exclusively to our associates. If space permits, we will extend the option to families outside of CBH.

We have submitted letters of approval from BLDG Management Company, Inc, the holder of our lease and The Society of the Divine Word, the owner of the property upon which our building sits.

We have included floor plans and a site plan indicating the required outdoor play area as well as a parking analysis demonstrating that we have adequate parking for the use. Additional features include:

- A warming and food prep kitchen that will be serviced by our existing cafe operated by a third party
- Dedicated parking within the existing parking field with either a crosswalk table or change of material for safety to the sidewalk leading to the entrance for parents to park and accompany children into the center
    - 15 stalls for staff
    - 7 stalls for parents or guardians
- We will place “No Drop-off/Pick-up” signage along the fire lane

- A small wooded area will be cleared to accommodate the play area with the goal to save as many healthy trees as possible. Any healthy trees removed with a caliper of 6” or more will be replaced with new trees.

Operational details include:

- Hours of operation will be at maximum from 6:30am to 7:00pm
- Bright Horizons will have a staff of 10-12 teachers, a director and a receptionist
- The age range for children will be from infants to 5 year olds
- The play area will be surrounded by a 6 foot tall black metal fence matching the style of the daycare across the street with possible brick wall elements to match Crate & Barrel’s corporate headquarters. All entries and egress will be accessible by key card only.
- Special events to occasionally be held outdoors (weather permitting) immediately after the center would close during weekdays only

Sustainability Memo Response
Crate and Barrel Daycare

Transportation and Land Use

TL 5- 8 Consider installing EV charging stations in new designated parking spots. If this will not be realized, consider including capabilities for future electric vehicle charging installation. This could include conduit, wiring, electrical service panels, and power capacity near parking areas, terminated in outlets or junction boxes to meet demand for at least 2 EV charging ports.

- *All existing EV charging stations provided on site by Crate&Barrel will remain, no new EV charging stations are planned, but we do have the capabilities to expand.*

TL 7- 1 The Village has enacted a ban on gas powered leaf blowers – ensure compliance on site.

- *Crate&Barrel complies*

Buildings and Energy

BE 4- 1 Consider green power purchase options such as those provided by ComEd and Nicor.

- *Crate and Barrel currently purchases green-e RECs through a company called 3-degrees, which covers the electrical consumption of all our locations.*

BE 5- 1 Explore opportunities for the property to utilize smart lights that can save energy through conservation. Achieve 100% LED installation if possible.

- *Any additional lighting will be LED*

BE 5- 4 Require purchase and installation of ENERGY STAR appliances when available.

- *Crate&Barrel agrees*

Waste Management

WM 2- 5 Assure compliance with the Cook County Construction & Demolition Debris Diversion Ordinance and encourage contractors and subcontractors to exceed minimum requirements where applicable.

- *Crate&Barrel will comply and will encourage*

Water and Wastewater

WW 1- 1 Consider landscaping practices that reduce water consumption and chemical use on site.

- *Crate&Barrel will explore*

WW 1- 2 Reduce landscaping water use with water-efficient irrigation systems, grass replacement, and

planting native and drought-resistant trees and vegetation in landscaping plans.

- *Crate&Barrel plans to plant only native and drought-resistant trees and vegetation in landscaping areas*

WW 3- 3 Reduce or offset impervious surfaces where possible and consider use of lighter colored pavements and building materials to lessen the impact of urban heat island effect.

- *Crate&Barrel will take all actions possible to lessen impact of urban heat island effect*

Greenspace and Ecosystem Health

GS 2- 5 Consider including exterior lighting design a policy to protect native plants, species, biodiversity, and improve night sky quality.

- *Existing site lighting will remain as-is*

GS 2- 7 Consider eliminating neonicotinoids and reduce use of long-lasting chemical pesticides for landscaping, if applicable.

- *We will contact our landscaping provider and ensure we are in compliance.*

GS 4- 8 Consider utilizing shade and water absorbing trees and replacing turf landscaping with native prairie, wild flower, and savanna plantings.

- *Crate&Barrel agrees and plans to include wildflower areas*

ALTA/NSPS LAND TITLE SURVEY
OF
TECHNY - CRATE & BARREL
1250 TECHNY ROAD, 1839 & 1842 WAUKEGAN ROAD
NORTHBROOK, ILLINOIS

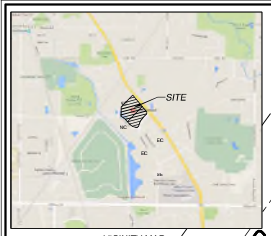

VICINITY MAP
NOT TO SCALE

FLOOD HAZARD NOTE

THIS PROPERTY IS IN AREAS DETERMINED TO BE OUTSIDE THE 0.2% ANNUAL CHANCE FLOODPLAIN (ZONE X) AS DEFINED BY THE FEDERAL EMERGENCY MANAGEMENT AGENCY'S FLOOD INSURANCE RATE MAP OF COOK COUNTY, ILLINOIS & INCORPORATED AREAS, MAP NO. 17031C0231J, EFFECTIVE DATE AUGUST 19, 2008.

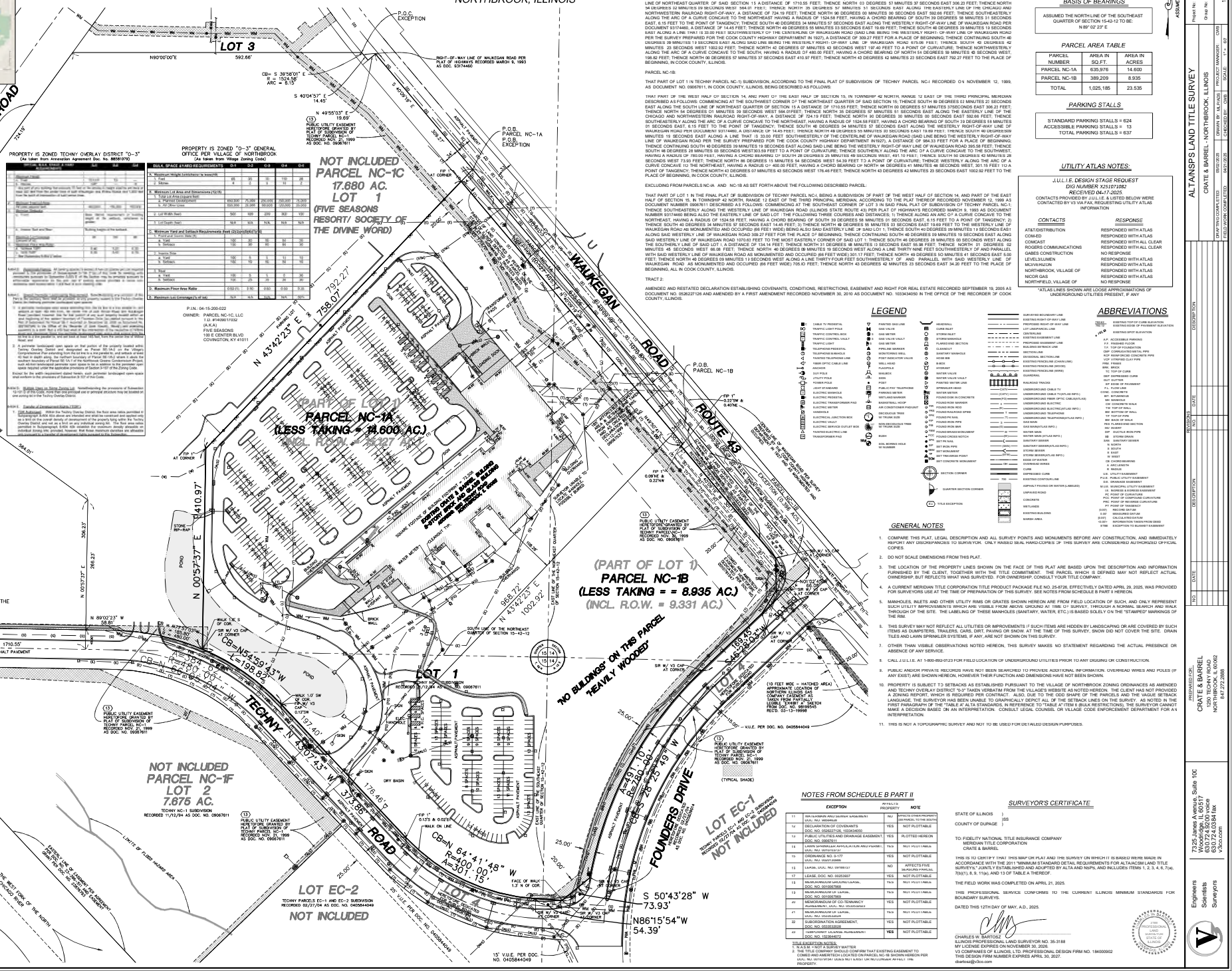
CHICAGO & NORTH WESTERN RAILROAD
(LESSEE LINE OF NORTH SHORE & NORTHWESTERN RAILROAD, PART OF WAY NOT AS MONUMENTED, AND OCCUPIED)
N 35°07'31" E
724.19'
LOT 3
592.66'
N90°00'00"E
P.O.C. EXCEPTION
RIGHT-OF-WAY LINE OF WAUKEGAN ROAD PER PLAT OF HIGHWAYS RECORDED MARCH 9, 1993 AS DOC. 93174460
CB= S 39°58'01" E
R = 1024.58'
ARC = 8.15'
S 40°04'57" E
14.45'
N 49°55'03" E
19.69'
PUBLIC UTILITY EASEMENT HEREINAFTER GRANTED BY PLAT OF SUBDIVISION OF TECHNY PARCEL NC-1 RECORDED NOV. 21, 1999 AS DOC. NO. 09067611
P.O.B. PARCEL NC-1A
P.O.C. EXCEPTION
P.O.B. PARCEL NC-1B
PROPERTY IS ZONED TECHNY OVERLAY DISTRICT "O-3" (As taken from Annexation Agreement Doc. No. 88058179)
PROPERTY IS ZONED "O-3" GENERAL OFFICE PER VILLAGE OF NORTHBROOK
BULK, SPACE &YARD REQUIREMENTS
NOT INCLUDED
PARCEL NC-1C
17.680 AC.
LOT 1
(FIVE SEASONS RESORT/ SOCIETY OF THE DIVINE WORD)
P.I.N.: 04-15-200-022
OWNER: PARCEL NC-1C, LLC
T.D. #1403017032
(A.K.A.)
FIVE SEASONS
100 E CENTER BLVD
COVINGTON, KY 41011
N 43°42'23" E
758.07'
792.27'
WAUKEGAN ROAD
ROUTE 43
(PART OF LOT 1)
PARCEL NC-1A
(LESS TAKING = 11.600 AC.)
(INCL. R.O.W. = 1.667 AC.)
N 54°02'09" W
364.01'
D410.97'
N 00°57'37" E
266.23'
306.23'
P.O.C. SW. CORNER OF THE NE. 1/4 SEC. 15-42-12
N 89°02'23" W
58.81'
S 89°02'23" E
1710.55'
ASPHALT PAVEMENT
CB=N54°58'43"W
L=198.82'
CB=N 60°00'00" W
L=480.00'
TECHNY ROAD
N 43°01'43" W
197.40'
CB=N 64°41'48" W
R=400.00'
A=301.15'
LOT 1
RECORDED NOV. 21, 1999 AS DOC. NO. 09067611
LOT EC-2
TECHNY PARCELS EC-1 AND EC-2 SUBDIVISION RECORDED 02/27/04 AS DOC. NO. 0405844049
NOT INCLUDED
NOT INCLUDED
PARCEL NC-1F
LOT 2
7.675 AC.
TECHNY NC-1 SUBDIVISION RECORDED 11/12/94 AS DOC. NO. 09067611
PUBLIC UTILITY EASEMENT HEREINAFTER GRANTED BY PLAT OF SUBDIVISION OF TECHNY PARCEL NC-1 RECORDED NOV. 21, 1999 AS DOC. NO. 09067611
APPROXIMATE LOCATION OF THE WEST FORK OF THE NORTH BRANCH OF THE CHICAGO RIVER
EASTERLY LINE OF EASEMENT PER AGREEMENT RECORDED AS DOC. NO. 2007000 EASEMENT
LIMITS OF FLOOD HAZARD AREA
UNSUBDIVIDED
(PART OF LOT 1)
PARCEL NC-1B
(LESS TAKING = = 8.935 AC.)
(INCL. R.O.W. = 9.331 AC.)
"NO BUILDINGS" ON THIS PARCEL "HEAVILY WOODED"
EXISTING CRATE & BARREL BUILDING TO BE REMOVED AS PART OF FUTURE DEVELOPMENT
LOT 4
RECORDED NOV. 21, 1999 AS DOC. NO. 09067611
LOT EC-1
NOT INCLUDED
TECHNY PARCELS EC-1 AND EC-2 SUBDIVISION RECORDED 02/27/04 AS DOC. NO. 0405844049
FOUNDERS DRIVE
N 49°30'45" W
169.15'
S 45°29'15" W
S 50°43'28" W
73.93'
N86°15'54"W
54.39'
(10 FEET WIDE – HATCHED AREA) APPROXIMATE LOCATION OF NORTHERN ILLINOIS GAS EASEMENT TO BE TAKEN FROM PARTIALLY LEGIBLE "EXHIBIT 2" SKETCH FROM DOC. NO. 88169545 RECD. 03-13-1998
15' V.U.E. PER DOC. NO. 0405844049
(TYPICAL SHADE)
SQUARE FOOTAGE OF BUILDING FOOTPRINT = 126,000 SQUARE FEET OR 2.89 ACRES
SOUTH LINE OF THE NORTHEAST QUARTER OF SECTION 15-42-12
CENTERLINE OF THE NORTHEAST QUARTER
N 43°42'23" E
968.72'
1002.92'
N 00°57'37" E
1410.97'
N 00°57'37" E
1317.23'
N 00°57'37" E
1317.23'
N 00°57'37" E
1317.23

APPLICABLE CODES

2018 - INTERNATIONAL BUILDING CODE (IBC) W/ NORTHBROOK AMENDMENTS
2021 - INTERNATIONAL ENERGY CONSERVATION CODE (IECC) W/ NORTHBROOK & IL AMENDMENTS
2018 - INTERNATIONAL FUEL GAS CODE W/ NORTHBROOK AMENDMENTS
2018 - INTERNATIONAL FIRE CODE W/ NORTHBROOK AMENDMENTS
2018 - INTERNATIONAL MECHANICAL CODE (IMC) W/ NORTHBROOK AMENDMENTS
2017 - NATIONAL ELECTRIC CODE (NEC) W/ NORTHBROOK AMENDMENTS
2014 - ILLINOIS PLUMBING CODE W/ NORTHBROOK AMENDMENTS
2015 - LIFE SAFETY CODE (NFPA 101)
CURRENT VILLAGE OF NORTH CHICAGO ZONING ORDINANCE
CURRENT ILLINOIS ACCESSIBILITY CODE
2017 ICC/ANSI A117.1
2010 AMERICANS WITH DISABILITIES ACT (ADA)

ABBREVIATIONS

ACOUS	ACOUSTICAL	FHC	FIRE HOSE CABINET	PLAM	PLASTIC LAMINATE
ACT	ACOUSTICAL CEILING TILE	FIN	FINISH	PT	POST TENSIONED
ADJ	ADJUSTABLE	FIN FL	FINISH FLOOR	PTD	PAINTED
AFF	ABOVE FINISHED FLOOR	FOG	FACE OF GLAZING	RCP	REFLECTED CEILING PLAN
AL	ALUMINUM	FOF	FACE OF FOUNDATION	RD	ROOF DRAIN
ALT	ALTERNATE (3)	FOP	FACE OF PRECAST	REINF	REINFORCE (D) (ING) (MENT)
AP	ACCESS PANEL	GA	GAUGE	REQD	REQUIRED
BF	BOTTOM OF	GALV	GALVANIZED	RO	ROUGH OPENING
BLDG	BUILDING	GEN	GENERAL	SC	SOLID CORE
BLKG	BLOCKING	GL	GLASS	SM	SHEET METAL
BTN	BETWEEN	GYP BD	GYPSUM BOARD	SIM	SIMILAR
CL	CENTER LINE	HC	HOLLOW CORE	SST	STAINLESS STEEL
CIP	CAST IN PLACE CONCRETE	HDW	HARDWARE	ST	STONE
CJ	CONTROL JOINT	HM	HOLLOW METAL	STL	STEEL
CLG	CEILING	HORIZ	HORIZONTAL	STRUCT	STRUCTURAL
CMU	CONCRETE MASONRY UNIT	HP	HIGH POINT	SUSP	SUSPENDED
COL	COLUMN	HT	HEIGHT	T	TOP OF
CONC	CONCRETE	HVAC	HEATING VENTILATION AND AIR	TEL	TELEPHONE
CONST	CONSTRUCTION	HVEP	CONDITIONING	TYP	TYPICAL
CONT	CONTINUOUS (ATION)		HEATING VENTILATION ELECTRICAL	UNO	UNLESS NOTED OTHERWISE
CONTR	CONTRACT (OR)		AND PLUMBING	VERT	VERTICAL
DEMO	DEMOLITION (ISH) (ISHED)	ID	INSIDE DIAMETER	VIF	VERIFY IN FIELD
DET	DETAIL	INTR	INTERIOR	W	WITH
DIM	DIMENSION	INSUL	INSULATION	WO	WITHOUT
DWG	DRAWING	JAN	JANITOR	WD	WOOD
EF	EXHAUST FAN	JC	JANITORS CLOSET	WP	WORKING POINT
EL	ELEVATION	JT	JOINT		
ELEC	ELECTRICAL	LP	LOW POINT		
ELEV, EVTR	ELEVATOR	MAX	MAXIMUM		
EOD	EDGE OF DECK	MECH	MECHANICAL		
EOS	EDGE OF SLAB	MEP	REFER TO HVAC, HVEP		
EP	ELECTRICAL PANEL	MET	METAL		
EQ	EQUAL	MFR	MANUFACTURER		
EQUIP	EQUIPMENT	MIN	MINIMUM		
EQUIV	EQUIVALENT	MISC	MISCELLANEOUS		
ETR	EXISTING TO REMAIN	MO	MASONRY OPENING		
EWC	ELECTRIC WATER COOLER	MOD	MODULE		
EXP	EXPANSION	MULL	MULLION		
EXP JT, EJ	EXPANSION JOINT	NIC	NOT IN CONTRACT		
EXPO	EXPOSED	NO	NUMBER		
EXST	EXISTING	NTS	NOT TO SCALE		
EXT	EXTERIOR	OC	ON CENTER		
F	FACE OF	OFD	OVERFLOW DRAIN		
FD	FLOOR DRAIN	OD	OUTSIDE DIAMETER		
FEC	FIRE EXTINGUISHER CABINET	OH	OVERHEAD		
FF	FINISH FLOOR	OPNG	OPENING		

GRAPHIC SYMBOLS

ENLARGED PLAN SYMBOL — AREA OF DETAIL, DETAIL NUMBER, SIMILAR OR OPPOSITE, SHEET NUMBER

DOOR TAG SYMBOL — DOOR NUMBER, HARDWARE SET (OPTIONAL SEE SPECS.)

WINDOW TAG SYMBOL — WINDOW NUMBER

INTERIOR ELEVATION SYMBOL — ELEVATION NUMBER, SHEET NUMBER

KEYNOTE TAG SYMBOL — KEYNOTE NUMBER

COLUMN GRID SYMBOL — COLUMN NUMBER

EXTERIOR ELEVATION SYMBOL — ELEVATION NUMBER, SHEET NUMBER

PARTITION TYPE SYMBOL — PARTITION TYPE

HEIGHT ELEVATION SYMBOL — LOCATION, HEIGHT

ROOM TAG SYMBOL — ROOM NAME, ROOM NUMBER, ROOM AREA

BUILDING SECTION SYMBOL — DIRECTION OF VIEW, DETAIL NUMBER, SHEET NUMBER

REVISION SYMBOL — REVISION NUMBER, REVISED AREA

WALL SECTION SYMBOL — DIRECTION OF VIEW, DETAIL NUMBER, SHEET NUMBER

NORTH ARROW

MATERIALS LEGEND

GYPSUM BOARD; COMPRESSIBLE FILLER; PLYWOOD; EARTH/TOPSOIL; RIGID INSULATION; COMPACTED FILL; BATT INSULATION; ROUGH LUMBER / WOOD BLOCKING; STEEL; FINISH WOOD; FACE BRICK; CAST-IN-PLACE CONCRETE; CONCRETE MASONRY UNITS; PRE-CAST CONCRETE

BUILDING AREA (USABLE SQUARE FOOTAGE)

DESCRIPTION	EXISTING				PROPOSED
	BLDG A.	BLDG B.	BLDG C.	TOTALS	
LOWER LEVEL	21,353 S.F.	-	-	21,353 S.F.	NO CHANGE
ENTRY LEVEL	43,313 S.F.	22,260 S.F.	3,986 S.F.	69,558 S.F.	
UPPER LEVEL	42,230 S.F.	21,379 S.F.	4,536 S.F.	68,145 S.F.	
PENTHOUSE LEVEL		8,227 S.F.		8,227 S.F.	
EXISTING FLOOR TOTAL:	106,895 S.F.	51,866 S.F.	8,522 S.F.	167,303 S.F.	

NOTE: EXISTING TOTALS BASED ON ORIGINAL BUILDING DRAWING DOCUMENTATION DATED 8/27/1998 PROVIDED BY CRATE & BARREL

TOTAL FLOOR AREA:	167,303 S.F.	NO CHANGE
OFFICE USE:	143,898 S.F.	137,948 S.F.
ACCESSORY STO./MECH. USE:	23,405 S.F.	23,405 S.F.
DAY CARE USE:	N/A	6,050 S.F.

ZONING DATA

DESCRIPTION	CODE REQUIREMENT:	PROPOSED:
ZONING CATEGORY (ARTICLE V)	O-3: GENERAL OFFICE DISTRICT TECHNY OVERLAY DISTRICT	O-3: GENERAL OFFICE DISTRICT TECHNY OVERLAY DISTRICT
USE (TABLE 1)	PROFESSIONAL OFFICES	PROFESSIONAL OFFICES (EXISTING) CHILD DAY CARE SERVICES (SPECIAL USE)
GROSS SITE AREA	3.66 ACRES (160,187 S.F.)	EXISTING - NO CHANGE
MINIMUM TOTAL LOT AREA (6-604.A)	150,00 S.F.	EXISTING - NO CHANGE
MAX LOT COVERAGE (% OF LOT) (6-604.A)	60%	EXISTING - NO CHANGE
FLOOR AREA RATIO (F.A.R.) (6-110)	2 W/0 TDR & 4 W/ TDR	EXISTING - NO CHANGE
BUILDING SETBACKS:		
FRONT YARD &SETBACKS (6-110)	50'-0" MINIMUM YARD 80'-0" MINIMUM SETBACK	EXISTING - NO CHANGE
REAR YARD & SETBACKS (6-110)	5'-0" MINIMUM YARD 30'-0" MINIMUM SETBACK	EXISTING - NO CHANGE
SIDE YARD & SETBACKS (6-110)	50'-0" MINIMUM YARD 80'-0" MINIMUM SETBACK	EXISTING - NO CHANGE
BUILDING HEIGHT (6-604.A)	75'-0" MAXIMUM HEIGHT; BUILDING CODE MORE STRINGENT - SEE CODE STUDY	+/-50'-0" EXISTING - NO CHANGE
STORIES (6-110)	5 STORIES MAXIMUM ; BUILDING CODE MORE STRINGENT - SEE CODE STUDY	3 STORIES EXISTING - NO CHANGE
PARKING REQUIREMENTS	SEE PARKING CALCULATION	SEE PARKING CALCULATION

PARKING CALCULATIONS

BASED ON ZONING CODE TABLE 6-104 F & 6-105D
- REFER TO SITE PLAN FOR DAY CARE PARKING SPACE ALLOCATIONS

	DESCRIPTION	ZONING REQUIREMENTS (FOR PROPOSED USE)	EXISTING	PROPOSED
CIVIL & SIMILAR/ CORPORATE OFFICES	PER SQ. FT. REQUIREMENT	1 PER 250 SQ. FT. NET; FLOOR AREA = 650 REQUIRED SPACES	637 SPACES	614 SPACES (REALLOCATED BELOW)
	ACCESSIBLE SPACES (PER IBC 2018 & IAC)	2% OF TOTAL (500-1000 SPACES) = 13 REQUIRED ACCESSIBLE SPACES	13 SPACES	13 SPACES (EXISTING - NO CHANGE)
	LOADING BERTHS:	1 PER FIRST 150,000 SQ. FT.	4 LOADING BERTHS	4 LOADING BERTHS (EXISTING - NO CHANGE)
	OFFICE TOTAL:	650 TOTAL SPACES (13 HC) 2 LOADING BERTHS	637 TOTAL SPACES (13 HC) 4 LOADING BERTHS	614 SPACES (13 HC) 4 LOADING BERTHS
CHILD DAY CARE/PRE-VIOUS	PER EMPLOYEE REQ.	1 PER EMPLOYEE = 15 PARKING SPACES	N/A	15 SPACES (REALLOCATED EXISTING)
	PER CHILD REQ.	1 PER 10 CHILDREN (50 CHILDREN/ MAX) = 7 REQUIRED SPACES	N/A	7 SPACES (REALLOCATED EXISTING)
	ACCESSIBLE SPACES (PER IBC 2018 & IAC)	1 SPACE (1 TO 25 SPACE)	N/A	1 SPACE (REALLOCATED EXISTING)
	LOADING BERTHS:	N/A	N/A	N/A
	CHILD DAY CARE TOTAL:	22 SPACES (1 HC)	N/A	22 SPACES (1 HC)
	TOTAL SURFACE PARKING:	574 TOTAL SPACES (14 HC) 2 LOADING BERTH	637 TOTAL SPACES (13 HC) 4 LOADING BERTH	636 SPACES (14 HC) 4 LOADING BERTH

NOTE: ACCESSIBLE SPACES ARE COUNTED IN THE REQUIRED TOTAL, NOT IN ADDITION TO PER IBC 2018

* TOTAL CALCULATED FLOOR AREA FOR REQUIRED PARKING IS CALCULATED AS NET PER NORTHBROOK ZONING CODE, AND HAS EXCLUDED THE ACCESSORY STORAGE AND MECHANICAL SPACES FROM THE CALCULATION THAT DO NOT CREATE DEMAND FOR PARKING. TOTAL GARAGE AREA IS 137,948 S.F. AS SHOWN IN SQUARE FOOTAGE TABLE ABOVE.

- CORRIDORS, STAIRS, SHAFTS, RESTROOMS HAVE NOT BEEN EXCLUDED BUT COULD BE TO FURTHER REDUCE THE REQUIRED PARKING AS THESE AREAS ALSO DO NOT CREATE A DEMAND FOR PARKING PER CALCULATIONS AS DEFINED BY BOMA.
- CALCULATIONS AS SHOWN COMPLY WITH ZONING REQUIREMENTS WITHOUT REMOVING AND RECALCULATING WITH THESE SPACES EXCLUDED.

CODE STUDY - BUSINESS (B) & DAY CARE (I-4) OCCUPANCY

PROJECT SCOPE IS WITHIN AN EXISTING BUILDING, STUDY BELOW IS ONLY APPLICABLE TO AREA OF WORK.

BUILDING ELEMENT	EXISTING	CODE REQUIREMENT IBC REQ	CODE REQUIREMENT NFPA REQ	BOLD = MOST RESTRICTIVE	CODE REFERENCE IBC REQ	CODE REFERENCE NFPA REQ
BUILDING CLASSIFICATION:	B - BUSINESS OCCUPANCY (EXISTING) / I-4 DAYCARE (NEW USE)				IBC 2021 CLASSIFICATION - SECTION 304 / 308.5	
BUILDING CLASSIFICATION (NFPA):	BUSINESS (EXISTING) / NEW DAY CARE (NEW USE)				NFPA 2015 CLASSIFICATION - SECTIONS 6.1 / 39	
CONSTRUCTION TYPE	TYPE IIB - (EXISTING)		TYPE II (000) - (EXISTING)		TABLE 601	TABLE A.8.2.1.2 (NFPA 220)
MAX ALLOWABLE FLOOR AREA	EXISTING (NO CHANGE)	39,000 S.F. (EXISTING COMPLIES)	-		TABLE 504.3	-
MAXIMUM STORIES	3 STORIES (NO CHANGE)	3 STORIES (EXISTING COMPLIES)	3 STORIES (EXISTING COMPLIES)		TABLE 504.4	TABLE 16.1.6.1
MAXIMUM HEIGHT	+/- 64'-0" (NO CHANGE)	75' (EXISTING COMPLIES)	-		TABLE 504.3	-

FIRE RESISTANCE RATING REQUIREMENTS FOR BUILDING ELEMENTS (HOURS)

WALLS:	EXISTING	CODE REQUIREMENT IBC REQ	CODE REQUIREMENT NFPA REQ	BOLD = MOST RESTRICTIVE	CODE REFERENCE IBC REQ	CODE REFERENCE NFPA REQ
EXTERIOR BEARING	0-HR (NO CHANGE)	0 - HR	0 - HR		TABLE 601	TABLE A.1.1 NFPA 220
EXTERIOR NON-BEARING	0-HR (NO CHANGE)	0 - HR	0 - HR		TABLE 602	TABLE A.1.1 NFPA 220
INTERIOR BEARING	0-HR (NO CHANGE)	0 - HR	0 - HR		TABLE 601	TABLE A.1.1 NFPA 220
INTERIOR NON-BEARING (PARTITIONS)	0-HR (NO CHANGE)	0 - HR	0 - HR		TABLE 601	TABLE A.1.1 NFPA 220
ELEVATOR LOBBY ENCLOSURE	N/A SCOPE OF WORK	ALL EXISTING TO REMAIN - NO WORK				
EXIT STAIR ENCLOSURES	N/A SCOPE OF WORK	ALL EXISTING TO REMAIN - NO WORK				
EXIT PASSAGEWAYS	N/A SCOPE OF WORK	ALL EXISTING TO REMAIN - NO WORK				
CORRIDOR WALLS	SMOKE PARTITION	0 - HR	SMOKE PARTITION		708.3 / TABLE 1020.1	16.4.6(2)
HORIZONTAL EXIT	N/A SCOPE OF WORK	ALL EXISTING TO REMAIN - NO WORK				
SMOKE BARRIER	N/A SCOPE OF WORK	ALL EXISTING TO REMAIN - NO WORK				
SMOKE PARTITION	0-HR SMOKE PARTITION	0 - HR	0-HR SMOKE PARTITION		710.3	8.4
VERTICAL SHAFTS	N/A SCOPE OF WORK	ALL EXISTING TO REMAIN - NO WORK				
FLOORS:						
MIN FIRE RESISTANCE	EXISTING (NO CHANGE)	0 - HR	0 - HR		TABLE 601	TABLE A.1.1 NFPA 220
PROTECTION OF VERTICAL	EXISTING (NO CHANGE)	ALL EXISTING TO REMAIN - NO WORK				
ACTING AS REQUIRED SEPARATION:	1-HR	1 - HR (NOT LESS THAN THE SEPARATION REQUIREMENT)	-		704.1	-
ROOF:						
ROOF	EXISTING (NO CHANGE)	0 - HR	0 - HR		TABLE 601	TABLE A.1.1 NFPA 220
ROOF SUPPORTING MEMBER	EXISTING (NO CHANGE)	0 - HR	0 - HR		TABLE 601	TABLE A.1.1 NFPA 220
ROOF COVERING MATERIAL	EXISTING (NO CHANGE)	CLASS C	-		TABLE 1505.1	-
BEAMS:						
SUPPORTING ONE FLOOR OR ROOF	EXISTING (NO CHANGE)	0 - HR	0 - HR		TABLE 601	TABLE A.1.1 NFPA 220
SUPPORTING MORE THAN ONE FLOOR OR ROOF	EXISTING (NO CHANGE)	0 - HR	0 - HR		TABLE 601	TABLE A.1.1 NFPA 220
SUPPORTING REQUIRED SEPARATIONS:	1-HR	1 - HR (NOT LESS THAN THE SEPARATION REQUIREMENT)	-		704.1	-
COLUMNS:						
SUPPORTING ONE FLOOR OR ROOF	EXISTING (NO CHANGE)	0 - HR	0 - HR		TABLE 601	TABLE A.1.1 NFPA 220
SUPPORTING MORE THAN ONE FLOOR OR ROOF	EXISTING (NO CHANGE)	0 - HR	0 - HR		TABLE 601	TABLE A.1.1 NFPA 220
SUPPORTING REQUIRED SEPARATIONS:	1-HR	1 - HR (NOT LESS THAN THE SEPARATION REQUIREMENT)	-		704.1	-

CODE STUDY GENERAL NOTES

1. BUILDING SEPARATION OF INCIDENTAL USES ARE REQUIRED TO BE FIRE BARRIERS, UNLESS NOTED OTHERWISE. IF TABLE 509 PERMITS AN AUTOMATIC SPRINKLER SYSTEM WITHOUT A FIRE BARRIER, WALLS ARE REQUIRED TO BE NON-RATED SMOKE PARTITIONS WITH SELF-AUTO-CLOSING DOORS, AND NO AIR TRANSFER OPENINGS (WITHOUT DAMPERS).
2. COLUMNS AND PRIMARY STRUCTURAL FRAME REQUIRED TO BE PROTECTED AS NECESSARY TO MAINTAIN RATINGS OF ANY OCCUPANCY SEPARATION AND AT MINIMUM MAINTAIN THE SAME RATING AS THE OCCUPANCY SEPARATION IT IS SUPPORTING. LIGHT GAUGE CONSTRUCTION IN LOAD BEARING WALLS ARE PERMITTED TO BE PROTECTED BY MEMBRANE PROTECTION
3. FIRE PROTECTION IS NOT REQUIRED FOR THE BOTTOM FLANGE OF LINTELS, SHELF ANGLES AND PLATES NOT PART OF THE STRUCTURAL FRAME, REGARDLESS OF SPAN.
4. DOORS IN SMOKE PARTITIONS SHALL BE SELF-CLOSING (NFPA 101, 8.4.3.5). SMOKE DAMPERS ARE REQUIRED IN SMOKE PARTITIONS (NFPA 8.4.5.2)

CODE STUDY - KEY PLAN

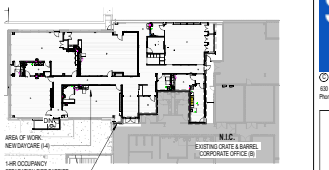

OCCUPANCY CLASS: DAY CARE (I-4)
AREA OF NEW WORK
LOWER LEVEL +/- 6,500 S.F.
CONSTRUCTION TYPE: TYPE IIB (TYPE II (000)

OCCUPANCY CLASS: BUSINESS (B)
CRATE & BARREL CORPORATE OFFICE: NO WORK
EXISTING 3 STORY BUILDING
CONSTRUCTION TYPE: TYPE IIB (TYPE II (000)

SEPARATIONS BETWEEN BUILDING OCCUPANCIES

SEPARATION BETWEEN B (BUSINESS AND I-4 DAY CARE) IF NOT AN ACCESSORY USE	1 HR FIRE BARRIER	2 HR FIRE BARRIER (1 HR REDUCTION W/ SPRINKLER SYSTEM	TABLE 508.4	TABLE 6.1.14.4.1 & 6.1.14.4.3
ACCESSORY USE OF B (BUSINESS) OCCUPANCY	NO SEPARATION REQUIRED	-	508.2 / 508.2.4	-
LAVATORY FROM CORRIDORS (IN DAYCARE SPACE)	-	SMOKE PARTITION	-	16.3.6(5)

SEPARATIONS AT INCIDENTAL USES - DAY CARE (AREA OF WORK)

FURNACE ROOMS WHERE ANY EQUIPMENT > 400,000 BTU/HR	1 HR OR AUTO SPRINKLER SYSTEM	1 HR FIRE BARRIER OR AUTO SPRINKLER SYSTEM	TABLE 509	16.3.2.1(1)(a)
BOILER ROOMS WHERE LARGEST PIECE > 15 PSI AND 10 HP	1 HR OR AUTO SPRINKLER SYSTEM	1 HR FIRE BARRIER OR AUTO SPRINKLER SYSTEM	TABLE 509	16.3.2.1(1)(a)
LAUNDRY ROOMS > 100 S.F.	1 HR OR AUTO SPRINKLER SYSTEM	1 HR FIRE BARRIER OR AUTO SPRINKLER SYSTEM (NO SIDE QUALIFIER)	TABLE 509	16.3.2.1(2)(a)
JANITOR CLOSETS	-	1 HR FIRE BARRIER OR AUTO SPRINKLER SYSTEM	-	16.3.2.1(2)(d)
STORAGE ROOM > 100 S.F.	-	1 HR FIRE BARRIER OR AUTO SPRINKLER SYSTEM	-	16.3.2.1(2)(b)
ELECTRICAL ROOMS	PER NEC AND NFPA 70	-	TABLE 509	-

CODE STUDY - TRAVEL DISTANCES: DAYCARE (I-4)

BUILDING ELEMENT:	CODE REQUIREMENT IBC REQ	CODE REQUIREMENT NFPA REQ	BOLD = MOST RESTRICTIVE	CODE REFERENCE IBC REQ	CODE REFERENCE NFPA REQ
MAX TRAVEL DISTANCE TO EXITS	200'-0"	150'-0"**		TABLE 1017.2	16.2.6.3
A ROOM WITH SLEEPING TO EXIT ACCESS DOOR	-	50'-0"	-	-	16.2.6.2(3)
MAX DEAD END CORRIDOR	20'-0"	50'-0"		1020.5	16.2.5.2

**STATE OF ILLINOIS DOCS STATES 150'-0" FOR INFANT AND TODDLERS ROOMS TO A DOOR LEADING DIRECTLY OUTSIDE (SECTION 406.370(c))

GENERAL NOTES

I. GENERAL NOTES

1. THE GENERAL CONTRACTOR SHALL LAY OUT AND VERIFY ALL INTERIOR AND EXTERIOR EXISTING CONDITIONS AND OVERALL DIMENSIONS OF BUILDING IN ENTIRE, PRIOR TO COMMENCING CONSTRUCTION AND PROMPTLY INFORM ARCHITECT IN WRITING OF ANY DISCREPANCY IN THE CONTRACTOR DOCUMENTS.
2. THE CONTRACTOR SHALL BE RESPONSIBLE FOR THE ACCURATE PLACEMENT OF NEW WALLS, PARTITIONS, ETC. CONTRACTOR SHALL VERIFY ALL EXISTING AND ANY PROPOSED WORK PRIOR TO COMMENCING CONSTRUCTION. PROMPTLY INFORM THE ARCHITECT IN WRITING OF ANY DISCREPANCIES SURVEYED AND REQUESTED CONDITIONS ON THE PLAN.
3. CONTRACTOR AND SUBCONTRACTORS SHALL VISIT JOB SITE TO THOROUGHLY EXAMINE EXISTING CONDITIONS. FAILURE TO MEET THIS REQUIREMENT SHALL NOT ENTITLE THE CONTRACTOR SUBCONTRACTORS TO ADDITIONAL COMPENSATION AFTER PROPOSALS ARE ACCEPTED.
4. ANY DISCREPANCY IN THE CONTRACT DOCUMENTS OR BETWEEN DRAWINGS AND THE JOB SITE CONDITIONS SHALL BE PROMPTLY REPORTED TO ARCHITECT IN WRITING FOR CLARIFICATION PRIOR TO COMMENCEMENT OF THE WORK.
5. ALL CONSTRUCTION SHALL BE IN ACCORDANCE WITH THE REQUIREMENTS OF THE APPLICABLE CODES. ENGINEERING SHALL CONFORM WITH ALL APPLICABLE MUNICIPAL STATE AND FEDERAL REGULATIONS HAVING JURISDICTION INCLUDING ACCESSIBILITY STANDARDS AND ADA REQUIREMENTS.
6. DO NOT SCALE THE DRAWINGS. THE DRAWINGS ARE NOT NECESSARILY TO SCALE. THE CONTRACTOR SHALL VERIFY ALL CONDITIONS AND DIMENSIONS AT THE JOB SITE PRIOR TO THE START OF CONSTRUCTION AND SHALL NOTIFY THE ARCHITECT SHALL BE NOTIFIED FOR CLARIFICATION BEFORE COMMENCING THE WORK. EXPLICIT DIMENSIONS SHALL HAVE PRECEDENCE OVER SCALE.
7. TOP OF ARCHITECTURAL FINISH IS NOTED ON CIVIL DOCUMENTS. THE CONTRACTOR SHALL VISIT THE SITE AND BE KNOWLEDGEABLE OF CONDITIONS. THE CONTRACTOR SHALL ROUGH GRADE, VERIFY AND ESTABLISH FOR ALL CONDITIONS OF THE PROJECT AND SHALL NOTIFY THE OWNER OF ANY CONDITIONS REQUIRING MODIFICATION BEFORE PROCEEDING WITH THE WORK.
8. CONTRACTOR SHALL COORDINATE THE WORK WITH ALL PARTIES INVOLVED SO THAT CONSTRUCTION CAN PROCEED SMOOTHLY, WITHOUT TRADE INTERFERENCE OR WASTE OF TIME AND MATERIALS.
9. SUBCONTRACTORS FOR EACH TRADE ARE INFORMED THAT INFORMATION PERTINENT TO THEIR WORK MAY OCCUR IN OTHER PORTIONS OF THE CONTRACT DOCUMENTS. REFER TO CIVIL, STRUCTURAL, MECHANICAL, ELECTRICAL AND PLUMBING DRAWINGS FOR ADDITIONAL GENERAL NOTES, ABBREVIATIONS AND SYMBOLS. ALL NOTES ARE TO BE REVIEWED AND APPLIED TO RELATED BUILDING COMPONENTS. NOTES APPEAR ON VARIOUS SHEETS FOR DIFFERENT SYSTEMS AND MATERIALS. SHEETS ARE TO BE REVIEWED AND NOTES ON ANY ONE SHEET ARE TO BE APPLIED ON RELATED DRAWINGS AND DETAILS.
10. CONTRACTOR SHALL PROVIDE ADEQUATE BRACING, SHORING, PROTECTIVE COVERING, DUST PROTECTION AND ALL NECESSARY PREVENTIVE MEASURES AGAINST FIRE, INJURY TO ALL PEOPLE AT JOB SITE AND DAMAGE TO PROPERTY ON THE PREMISES. CONTRACTOR SHALL BE SOLELY RESPONSIBLE FOR JOB SITE SAFETY.
11. CONTRACTOR SHALL REMOVE ALL DEBRIS AND TRASH RESULTING FROM CONSTRUCTION ON A DAILY BASIS.
12. PROVIDE 2x8 FIRE TREATED WOOD BLOCKING IN WALLS FOR ALL GRAB BARS, LAVATORIES, CORRIDOR/LEAN RAILS, TOWEL BARS, SHOWER CURTAIN RODS, SURFACE MOUNTED TELEVISIONS AND ELECTRONICS, ELECTRO-MAGNETIC HOLD-OPEN DEVICES AND WALL MOUNTED DOOR STOPS. TOWEL BARS, GRAB BARS AND HANDRAILS TO SUSTAIN A PULL OF 250 LBS., FOR 5 MINUTES. PROVIDE TWO ROWS OF 2x10 FIRE-TREATED BLOCKING FOR ALL-MOUNTED CABINETS. CONTRACTOR TO PROVIDE PROPER FRAMING/BLOCKING FOR ALL TOILET ACCESSORIES, LIGHT AND PLUMBING FIXTURES, AND FIRE PROTECTION SPECIALTIES AS REQUIRED.
13. ALL CORRIDOR DOORS SHALL HAVE DOOR CLOSERS INSTALLED ON ROOM SIDE, WHETHER SCHEDULED OR NOT.
14. ALL DRYWALL WHICH BUTTS PRECAST CONCRETE, MASONRY OR CONCRETE SHALL HAVE J-BEADS AND BE CAULKED.
15. ALL FINISHES SHALL BE CLASS 'A' UL APPROVED 0-25 FLAME SPREAD.
16. CAULK ALL TOILETS TO FLOORS OR WALLS, LAVATORIES TO WALLS, COUNTERTOPS TO WALLS, BATHROOM VANITY TOPS AND KITCHEN COUNTER TOPS TO WALLS. USE SILICONE SEALANT, COLOR WHITE U.N.O. VERIFY WITH INTERIOR DESIGNER AND OWNER.
17. ALL WOOD BLOCKING IN CONTACT WITH MASONRY OR CONCRETE SHALL BE PRESSURE-TREATED TYPE.
18. FIRE RATED WALLS SHALL EXTEND UPTIGHT TO THE UNDERSIDE OF THE FLOOR/ROOF DECK ABOVE, INCLUDING DRYWALL ON BOTH SIDES OF METAL STUDS. ALL DRYWALL JOINTS SHALL BE FIRE TAPED. SEE SHEETS IN A900 SERIES FOR ADDITIONAL NOTES AND DETAILS PERTAINING TO PENETRATION OF THESE WALLS BY DUCTS, PIPES, CONDUIT, WIRE, ETC.
19. ALL FIRE RATED SEALING SYSTEMS SHALL BE UL-RATED WITH RATING EQUAL TO OR GREATER THAN THE WALL PENETRATED. SUBMIT SEALING SYSTEMS TO ARCHITECT FOR REVIEW. CONTRACTOR RESPONSIBLE FOR PROVIDING ALL FIRE SEALING SYSTEMS FROM A SINGLE PROVIDER, PER SPECIFICATIONS. CONTRACTOR REQUIRED TO PROVIDE UL-RATED FIRE SEALING SYSTEMS COMPLYING WITH WALL RATING, DEFLECTION AND PENETRATION REQUIREMENTS TO ARCHITECT FOR APPROVAL PRIOR TO INSTALLATION. CONTRACTOR RESPONSIBLE FOR ALL REQUIRED SEALING JUDGEMENTS FROM A THIRD PARTY.
20. PROVIDE CONTROL JOINTS ABOVE ALL DOOR JAMBS WHICH ARE LOCATED IN DRYWALL OR MASONRY CORRIDORS WALLS. CONTRACTOR TO PROVIDE CONTROL JOINTS AT 30'-0" MAXIMUM INCREMENTS AND VERIFY FINAL LOCATIONS WITH ARCHITECT.

II. FIRE RESISTANCE RATINGS

1. THE BUILDING SHALL BE OF THE FIRE RESISTIVE CONSTRUCTION, AS NOTED ON THE CODE DATA FOR EACH BUILDING.
2. REFER TO FIRE RATING ON ARCHITECTURAL DRAWINGS FOR REQUIRED FIRE RATING OF VARIOUS STRUCTURAL ELEMENTS AND THE REQUIRED FIRE RATING OF VARIOUS STRUCTURAL ELEMENTS AND THE REQUIRED UL DESIGN NUMBER. FOR REQUIREMENTS ON DOOR RATINGS, THROUGH PENETRATIONS, ETC. PERTAINING TO LIFE SAFETY REQUIREMENTS OF JOB, REFER TO LIFE SAFETY PLANS WHICH INDICATE PROPER RATINGS OF WALLS.
3. ALL OPENINGS IN THE FLOOR SLABS, INCLUDING SPACES BETWEEN CONDUITS, PIPING, ETC. (EXCEPT WHEN COMPLETELY ENCLOSED WITHIN FIRE RATED CONSTRUCTION), SHALL BE SEALED OFF WITH APPROVED FIRE RATED PENETRATION SEALANT SYSTEMS TO MAINTAIN FIRE RATING/ CONTINUITY OF THE FLOOR CONSTRUCTION.
4. ALL FIRE RESISTIVE (LABELED) DOORS SHALL HAVE THE APPROPRIATE UL OR OTHER RATING AGENCY LABEL ACCEPTABLE TO GOVERNMENT AUTHORITIES AFFIXED TO BOTH DOOR AND FRAME.
5. FIRE RATING INDICATION ON WALL SHALL MEAN THE ENTIRE LENGTH OF WALL IS FIRE RATED.
6. ALL PIPING DUCTS, ETC., THAT PENETRATE FLOOR SLABS SHALL BE INSTALLED IN A MANNER THAT WILL PRESERVE THE FIRE RESISTIVE AND STRUCTURAL INTEGRITY.
7. ALL RATINGS TO COMPLY WITH UNDERWRITERS LABORATORIES (UL) TEST RATINGS. IN THE ABSENCE OF TESTED ASSEMBLY, PROVIDE CERTIFICATE OF EQUIVALENCY FROM UL MEET ALL THE REQUIREMENTS OF FACTORY MUTUAL ENGINEERING OF BOTH CONSTRUCTION AND FIRE PROTECTION.
8. SEE DRAWINGS FOR OCCUPANCY FIRE SEPARATION REQUIREMENTS ON THE LIFE SAFETY DRAWINGS.
9. INTERIOR FINISH MATERIALS USED FOR FLOORS, WALLS AND CEILINGS SHALL BE CLASS 1 WITH A FLAME SPREAD/SMOKE DEVELOPED LIMITS BASED ON ASTM E-84 TEST METHOD:
   FLAME SPREAD RATING (ASTM E-84): LESS THAN 25
   SMOKE DEVELOPED (ASTM E-84): LESS THAN 200
   CRITICAL RADIANT FLUX (ASTM E-648)
   AVERAGE RADIANT FLUX GREATER THAN .45 WATTS/CM2
10. ALL MATERIALS USED FOR DECORATING, DRAPERIES, CURTAINS AND HANGINGS SHALL COMPLY WITH NFPA 701. FOAMED PLASTIC INSULATION (URETHANE, POLYSTYRENE, POLYISOCYANURATE OR OTHER) SHALL 1" INCH THICKNESS OF BE USED ONLY WHEN COMPLETELY COVERED BY A MINIMUM 1/2" GYPSUM WALLBOARD OR THE EQUIVALENT AND HAVING A FLAME SPREAD OF 25 OR LESS.
11. AUTOMATIC SPRINKLER PROTECTION SHALL BE INSTALLED THROUGHOUT THE BUILDING AND RECONFIGURED TO MEET ALL CODE REQUIREMENTS OF THE RENOVATED SPACE.
12. CONTRACTOR TO VERIFY THAT SMOKE/FIRE DAMPERS ARE PROVIDED IN ALL RATED WALLS/SHAFTS AS REQUIRED BY CODE WHETHER OR NOT THEY ARE SHOWN ON MECHANICAL DRAWINGS. ANY DISCREPANCIES IN LOCATIONS OF DAMPERS SHALL BE VERIFIED WITH ARCHIT

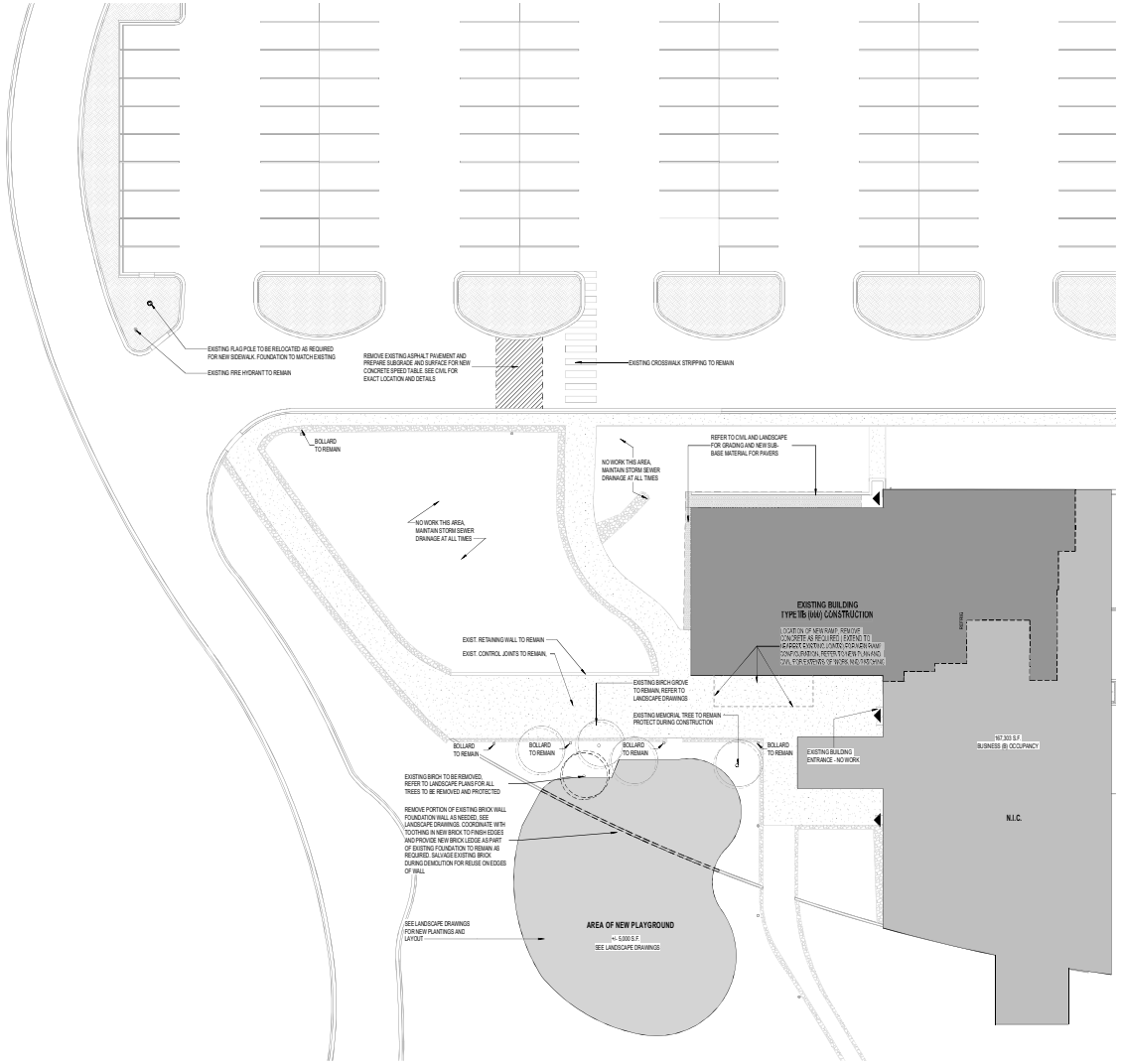

1 DAYCARE - DEMO SITE PLAN
1/16" = 1'-0"

SITE PLAN DEMOLITION NOTES

1. GC SHALL CONFORM TO ALL BUILDING CODE REGULATIONS PERTAINING TO DEMOLITION, INCLUDING PAYMENT FOR ANY SPECIAL PERMITS. PERFORM WRECKING AND REMOVAL OPERATIONS IN SUCH A MANNER AS TO ENSURE THE LEAST POSSIBILITY OF DAMAGE TO ADJOINING AREAS. BE LIABLE FOR, AND REPAIR DAMAGE TO STRUCTURES, MATERIALS OR EQUIPMENT CAUSED BY WRECKING OPERATIONS. USE OF EXPLOSIVES WILL NOT BE PERMITTED.
2. GC SHALL CONDUCT DEMOLITION OPERATIONS AND REMOVAL OF DEBRIS TO ENSURE MINIMUM INTERFERENCE WITH ROADS, STREETS, WALKS, AND OTHER ADJACENT OCCUPIED OR USED FACILITIES. ENSURE SAFE PASSAGE OF PERSONS AROUND AREA OF DEMOLITION. CONDUCT OPERATIONS TO PREVENT INJURY TO ADJACENT STRUCTURES, OTHER FACILITIES AND PERSONS. PROMPTLY REPAIR DAMAGES CAUSED TO ADJACENT FACILITIES BY DEMOLITION OPERATIONS AT NO COST TO OWNER.
3. UNLESS OTHERWISE SPECIFIED OR INDICATED ON THE DRAWINGS, ALL SALVAGE AND PRODUCTS OF DEMOLITION AND REMOVAL SHALL BECOME THE PROPERTY OF THIS CONTRACTOR. COMPLY WITH GOVERNING REGULATIONS PERTAINING TO ENVIRONMENTAL PROTECTION. DEMOLISH MASONRY IN SMALL SECTIONS. WORK SHALL BE EXECUTED IN AN ORDERLY AND CAREFUL MANNER WITH DUE CONSIDERATION FOR THE PUBLIC.
4. CONTRACTOR SHALL REMOVE ALL ITEMS OF SALVAGE AND ALL RUBBISH AND DEBRIS FROM THE SITE AS QUICKLY AS IT ACCUMULATES, SO AS TO PREVENT ANY FIRE HAZARDS OR UNDUE HARDSHIPS IN UNLOADING OF NEW MATERIALS. STREETS AND DRIVES SHALL BE KEPT REASONABLY CLEAN AND SHALL BE SWEPT WHEN NECESSARY TO REMOVE SPILLED DEBRIS. BURNING OF REMOVED MATERIALS FROM DEMOLISHED STRUCTURES WILL NOT BE PERMITTED ON SITE. CONTRACTOR SHALL MAKE ALL NECESSARY ARRANGEMENTS FOR TIMES OF ACTUAL TRUCKING AWAY OF DEBRIS. TRANSPORT MATERIALS REMOVED FROM STRUCTURES AND LEGALLY DISPOSED OF OFF SITE.
5. SEE GENERAL NOTES ON SHEET T003 REGARDING HAZARDOUS MATERIAL REMOVAL AND THE INTEGRITY OF EXISTING RATED COLUMN ENCLOSURES AND FIRE RATINGS.
6. SEE CIVIL DEMOLITION DRAWINGS FOR UTILITY COVER DEMOLITION / RELOCATION.
7. SEE CIVIL DEMOLITION DRAWINGS FOR STORM MANHOLE DEMOLITION / RELOCATION.
8. ALL BUILDING DEMOLITION MUST INCLUDE REMOVAL OF ANY INFRASTRUCTURE, FOUNDATIONS, UTILITY LINES, ETC.
9. IT IS EXCAVATOR'S RESPONSIBILITY TO TEST SOIL AND OBTAIN NECESSARY DOCUMENTS FOR REMOVAL AND HAULING AWAY AND DEMOLITION ITEMS.
10. FOR DEMOLITION AND/OR CONSTRUCTION AN EIGHT (8) FOOT HIGH TEMPORARY CHAIN LINK CONSTRUCTION FENCE WITH DRIVEN POSTS AROUND THE PERIMETER OF THE LOT ALL CONSTRUCTION. THE FENCING MUST HAVE A GATED OPENING WHICH SHALL BE CLOSED WHEN NO CONSTRUCTION OR DEMOLITION ACTIVITY IS BEING PERFORMED ON THE SITE. FENCING MUST BE INSTALLED PRIOR TO COMMENCEMENT OF ANY CONSTRUCTION OR DEMOLITION ON THE SITE AND MUST REMAIN IN PLACE UNTIL THE FINAL GRADING OF THE PROPERTY COMMENCES.
11. PROVIDE THE LOCKBOX AT THE CONSTRUCTION GATE FOR FIRE DEPARTMENT USE.
12. EROSION CONTROL MEASURES (SILT FENCING) MUST BE INSTALLED AND MAINTAINED ON THE INSIDE OF THE PERIMETER FENCE.
13. EACH TREE ON THE PROPERTY, INCLUDING THE PARKWAY TREES, MUST BE PROTECTED WITH FENCING. SEE LANDSCAPE TREE PRESERVATION PLAN AND CIVIL DEMOLITION PLANS.
14. SEE LANDSCAPE DRAWINGS FOR TREE REMOVAL SCOPE OF WORK.
15. CONSTRUCTION / DEMOLITION DEBRIS AND REFUSE CONTAINMENT SHALL BE REQUIRED FOR ALL JOB SITES. ALL SUCH DUMPSTERS OR CONTAINERS SHALL BE SET BACK A MINIMUM OF FIVE (5) FEET FROM THE SIDE LOT LINE. THEY SHALL BE COVERED AT ALL TIMES WHEN NO WORK IS BEING PERFORMED ON THE PROPERTY.
16. CONSTRUCTION SITES SHALL BE PROVIDED WITH A PORTABLE TOILET. THE LOCATION SHALL BE SET BACK AS FAR AS POSSIBLE FROM ALL PROPERTY LINES TO WITHIN THREE TO FOUR FEET FROM THE EXCAVATION BUT NO LESS THAN A MINIMUM OF FIVE FEET FROM THE FRONT LOT LINE AND A MIN. FIVE FEET FROM THE SIDE LOT LINE, AND WHENEVER POSSIBLE THE PORTABLE TOILET SHALL BE LOCATED IN THE REAR YARD.
17. THE HOURS OF CONSTRUCTION / DEMOLITION ARE AS FOLLOWS: 7:00 A.M. TO 7:00 P.M. MONDAY - SATURDAY, NO WORK ON SUNDAY.

SITE SALVAGE AND REUSE NOTES

1. DECORATIVE METAL RAILINGS: GENERAL CONTRACTOR TO SALVAGE AND STORE DECORATIVE RAILINGS TO BE REUSED AND REINSTALLED FOR PORTIONS OF THE NEW RETAINING WALLS, AS INDICATED ON D102. CONTRACTOR TO REFINISH RAILINGS PRIOR TO REINSTALLATION.
2. RETAINING WALL STONE: GENERAL CONTRACTOR TO REMOVE ALL STONE AND STORE AND PROTECT DURING CONSTRUCTION FOR REUSE IN EXISTING RETAINING WALLS. SEE SITE PLANS FOR NEW LOCATIONS. TURN UNUSED MATERIALS OVER TO OWNER UPON COMPLETION
3. DRY STACKED STONE: SALVAGE AND STORE FOR REUSE.

SITE PLAN DEMOLITION LEGEND

- AREA NOT IN CONTRACT - SEE LANDSCAPE AND CIVIL DRAWINGS
- AREA IN CONTRACT
- EXIST. CONCRETE SIDEWALK TO REMAIN
- EXIST. CONCRETE SLAB TO REMAIN
- EXIST. SITE LIGHT FIXTURE TO REMAIN, SEE LANDSCAPE AND ELECTRICAL DRAWINGS
- EXIST. SITE LIGHT FIXTURE TO BE REMOVED, SEE LANDSCAPE AND ELECTRICAL DRAWINGS
- EXIST. FIRE HYDRANT TO REMAIN

SITE DEMOLITION KEYNOTES

GRAPHIC SCALES:
CALE: 0' - 0 1/16" = 1' - 0" (16' - 0" 32' - 0" 64' - 0")
SCALE: 0' - 0 1/16" = 1' - 0" (0' 8' - 0" 16' - 0" 32' - 0")
SCALE: 0' - 0 1/8" = 1' - 0" (0' 4' - 0" 8' - 0" 16' - 0")
SCALE: 0' - 0 1/4" = 1' - 0" (0' 2' - 0" 4' - 0" 8' - 0")
SCALE: 0' - 0 1/2" = 1' - 0" (0' 1' - 0" 2' - 0" 4' - 0")
SCALE: 0' - 0 3/4" = 1' - 0" (0' 1' - 0" 2' - 0" 4' - 0")
SCALE: 0' - 1" = 1' - 0" (0' 0' - 6" 1' - 0" 2' - 0")
SCALE: 0' - 1 1/2" = 1' - 0" (0' 0' - 6" 1' - 0" 2' - 0")
SCALE: 0' - 3" = 1' - 0" (0' 0' - 3" 0' - 6" 1' - 0")

PRINTED: 6/1/2025 3:47:24 PM
FILE LOCATION: I:\25010_C&B_Daycare_Central-IS_mgg\arch\dc.rvt

sas architects + planners, llc.
639 DUNDEE ROAD, SUITE 110 NORTHBROOK, IL 60062
Phone: 847 564-8333, Fax: 847 564-8866, www.sasarch.com

DAYCARE INTERIOR RENOVATION
CRATE & BARREL
1250 TECHNY RD., NORTHBROOK, IL. 60062

DEMOLITION SITE PLAN

REVISIONS

NO	DESCRIPTION	DATE
	BID & PERMIT	05/01/25

KEY PLAN:

True North / Project North

SIGNATURE:

STATE OF ILLINOIS
DARIUSZ A. ZARNOWSKI
001-015449
LICENSED ARCHITECT

PROFESSIONAL DESIGN FIRM REGISTRATION NUMBER: 184.007199
STATE OF ILLINOIS LICENSE EXPIRES: APRIL 30, 2027
DRAWN BY: AW/MD
APPROVED BY: DAZ
DATE: 05/23/25
25010
SHEET NO.
A-001

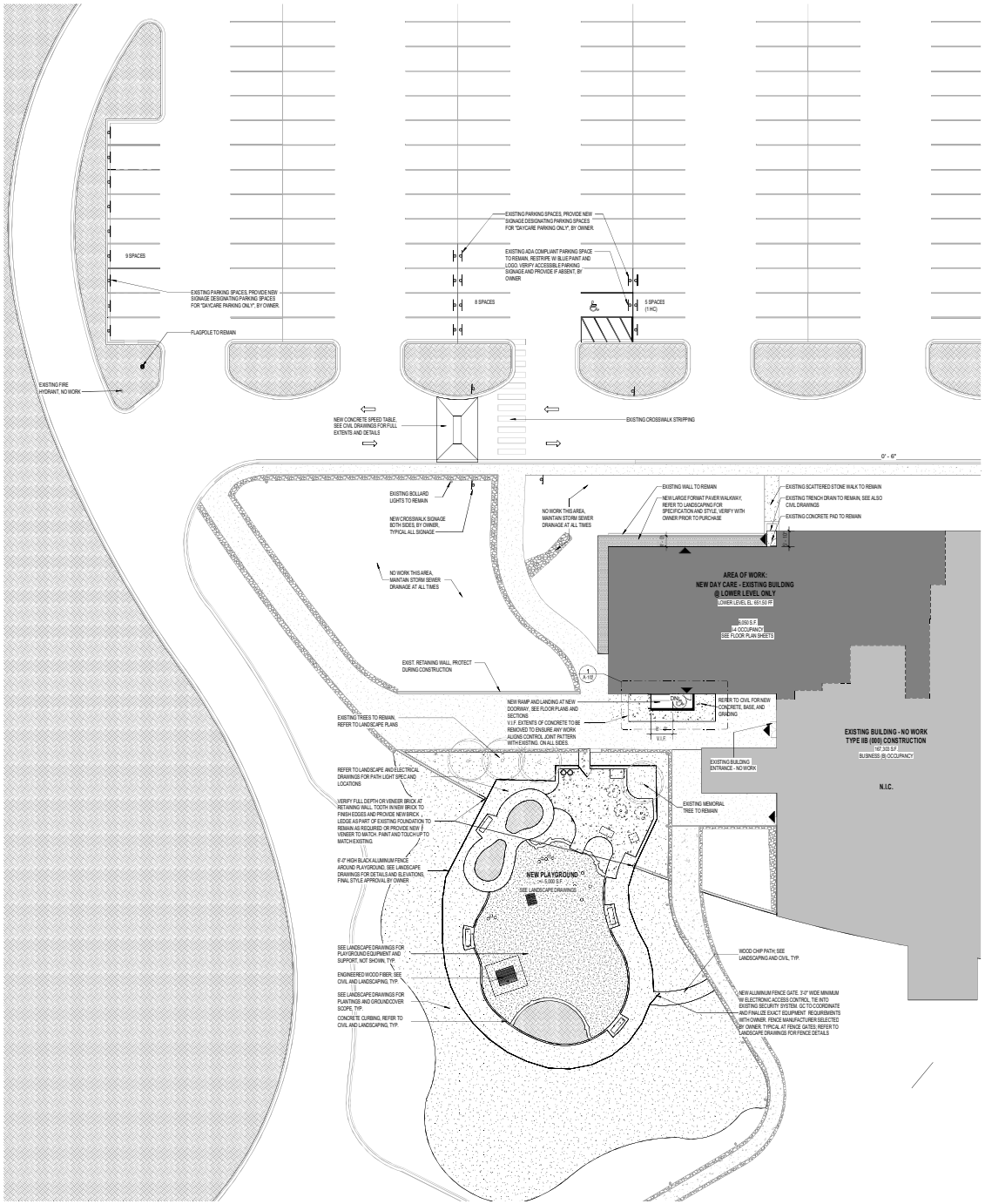

1 DAYCARE - PROPOSED SITE PLAN
1/16" = 1'-0"

SITE PLAN NOTES

1. MAINTAIN EXISTING EXITS FROM OFFICE BUILDING AND DO NOT BLOCK.
2. MAINTAIN ALL EMERGENCY VEHICLE ACCESS AND TEMPORARY LOADING DURING CONSTRUCTION. G.C. TO COORDINATE WITH THE AHJ, CRATE & BARREL, AND PROPERTY OWNER/LANDLORD TO KEEP ACCESS OPEN AT ALL TIMES.
3. SEE CIVIL DRAWINGS FOR ALL SITE GRADING. GC TO INFORM ARCHITECT OF ANY FIELD DISCREPANCIES PRIOR TO FINAL GRADING.
4. ENSURE DETECTABLE WARNINGS AT ALL DEPRESSED CURBS AND PEDESTRIAN SIDEWALKS. REFER TO CIVIL DRAWINGS FOR DETAILS.
5. ALL SIGNAGE TO BE PROVIDED BY OWNER. GC TO COORDINATE INSTALLATION.
6. ANY SOIL SURVEY TO BE PROVIDED FOR THE LANDSCAPE AREA IS THE DISCRETION OF OWNER RELATED TO UNFIT OR CONTAMINATED SOILS. ANY SOILS FOUND UNFIT FOR USE SHALL BE REMOVED AND REPLACE WITH THOSE NECESSARY FOR THE REQUIREMENTS OF THE EQUIPMENT. GC TO VERIFY AND COORDINATE. ADVISE ARCHITECT AND CIVIL ENGINEER AS SOON AS REQUIRED.

SITE PLAN DEMOLITION LEGEND

- AREA NOT IN CONTRACT - SEE LANDSCAPE AND CIVIL DRAWINGS
- AREA IN CONTRACT
- EXIST. CONCRETE SIDEWALK TO REMAIN
- EXIST. CONCRETE SLAB TO REMAIN
- EXIST. SITE LIGHT FIXTURE TO REMAIN. SEE LANDSCAPE AND ELECTRICAL DRAWINGS
- EXIST. SITE LIGHT FIXTURE TO BE REMOVED. SEE LANDSCAPE AND ELECTRICAL DRAWINGS
- EXIST. FIRE HYDRANT TO REMAIN

GRAPHIC SCALES

© sas architects + planners, llc.
630 DUNDEE ROAD, SUITE 110 NORTHBROOK, IL 60062
Phone: 847 564-8333, Fax: 847 564-8866, www.sasarch.com

DAYCARE INTERIOR RENOVATION
CRATE & BARREL
1250 TECHNY RD., NORTHBROOK, IL 60062

SITE PLAN

REVISIONS

NO.	DESCRIPTION	DATE
	100% SD SUBMITTAL	05/22/25
	BID & PERMIT	08/01/25

KEY PLAN:

True North | Project North

SIGNATURE:

PROFESSIONAL DESIGN FIRM REGISTRATION NUMBER: 184.007199

STATE OF ILLINOIS LICENSE EXPIRES: APRIL 30, 2027

DRAWN BY: AW/MD | APPROVED BY: AW/DAZ

DATE: 05/23/25

25010

SHEET NO.: A-002

PRINTED: 8/1/2025 3:47:25 PM

FILE LOCATION: I:\25010_C&B_Daycare_Central-25_mgg\arch\dc.rvt

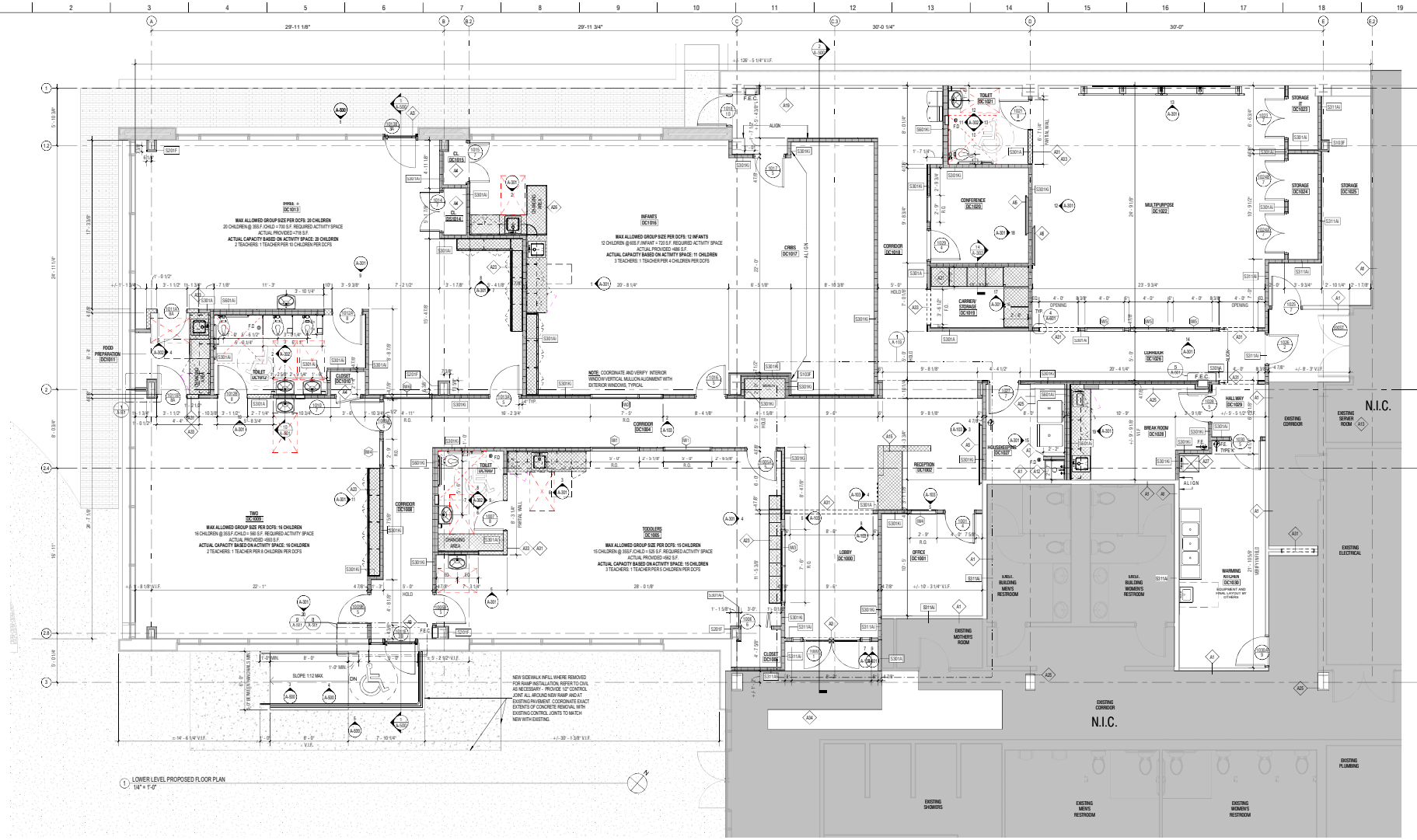

1 LOWER LEVEL PROPOSED FLOOR PLAN
1/4" = 1'-0"

KEY NOTES

A1	EXISTING WALLS, EXTEND CONTINUOUSLY TO BOTTOM OF DECK ABOVE TO COMPLY AS 1-HR OCCUPANCY SEPARATION WALL. SEAL ALL PENETRATIONS. PROVIDE ALL ASSEMBLIES TO OWNER AND ARCHITECT FOR REVIEW.
A2	FRP ON WALL BEHIND SINK, TYP. ALIGN TOP WITH ADJACENT HALF HEIGHT WALL
A3	STOREFRONT DOOR, SEE PLANS AND DOOR SCHEDULE
A4	18" DEEP SHELVING, (5) SHELVES, EQUALLY SPACES, WIRE COATED WHITE, ADJUSTABLE ON SHELF TRACK SYSTEM, TYP. ALL CLOSETS
A5	WALL MOUNTED T.V. AND MOUNT, O.F.C.I. PROVIDE IN WALL BLOCKING AS REQUIRED. REFER TO ELECTRICAL/TECH. DRAWINGS FOR ALL AV CONNECTIONS. GC TO VERIFY W/ OWNER PRIOR TO INSTALLATION.
A7	48" HIGH PARTIAL WALL W/ FRP ON MOP SINK SIDE. EXTEND FRP LINER TO WALLS ADJACENT TO SINK
A8	PLUMBING FIXTURES; FINAL PRODUCTS, TRIM, AND FINISH TO BE SELECTED BY OWNER. REFER TO PLUBING DRAWINGS, TYP.
A9	ADA HEIGHT DISHWASHER, O.F.C.I., REFER TO PLUMBING DRAWINGS FOR ROUGH-INS
A10	ADA HEIGHT UC REFRIGERATOR, O.F.C.I.
A11	WASHER AND DRYER, O.F.C.I. SEE MEP DRAWINGS FOR CONNECTION REQUIREMENTS
A12	MOP SINK, REFER TO PLUMBING DRAWINGS
A13	EXISTING SERVER ROOM TO REMAIN. PROTECT DURING CONSTRUCTION. GC TO ENSURE NO DEMOLITION OR WORK INTERFERS WITH OPERATION OF SERVER ROOM AT ANY TIME. GC TO COORDINATE WITH OWNER FOR ANY REQUIRED SHUT DOWNS OR NIGHT WORK TO COMPLETE SCOPE AS REQUIRED WITHOUT DISRUPTING OWNER OPERATIONS - NO WORK
A14	DECORATIVE FIXTURES BY OWNER, GC TO COORDINATE J-BOX LOCATIONS
A15	NEW FRONT DESK FURNITURE/MILLWORK BY OWNER, GC TO PROVIDE UTILITY CONNECTIONS, REFER TO ELECTRICAL/TECH PLANS
A16	EXISTING MECHO SHADES IN NEW LOCATION
A17	NEW FEATURE WALL - TBD
A18	FLOOR MOUNTED BALLET BAR, O.F.C.I.
A19	EXISTING HEATER CABINET UNIT TO REMAIN, SEE MECHANICAL
A20	NEW MIRROR BY OWNER. GC TO INSTALL AND COORDINATE WITH BALLET BAR; COORDINATE WITH I.D. FOR SPECIFICATION
A21	CUSTOM SHELVES FOR CARRIERS - SEE ELEVATIONS AND DETAILS
A22	MIRROR, REFER TO I.D. SCHEDULE O.F.C.I.
A23	NEW CUBBIES BY OTHERS, PROVIDE MINIMUM ONE (1) PER CHILD IN EACH ROOM.
A24	NEW CABINETRY AND HARDWARE BY OWNER. GC TO COORDINATE WITH OWNER FOR SIZING, PRODUCT, AND FINISH SELECTIONS. ENSURE ADA REQUIRED REACH FOR UPPER CABINET IS PROVIDED AS SHOWN ON THE ELEVATIONS - O.F.O.I.
A25	EXISTING STEEL TUBE TO REMAIN, COAT WITH INTUMESCENT PAINT TO UL#0849
A26	NEW OPEN CABINETS BY OWNER
A27	NEW UTILITY SINK, REFER TO PLUMBING DRAWINGS
A28	NEW SIGNAGE BY OWNER. GC TO VERIFY REQUIREMENTS W/ OWNER.
A29	1/2" REVEAL PROFILE TO MATCH EXISTING, REFER TO DOOR AND WINDOW DETAILS
A30	WALL BASE, REFER TO I.D. SHEETS FOR DETAILS AND MORE INFORMATION, TYPICAL
A31	3/4" WHITE OAK WOOD CAP AND CASING WITH 1/4"x1/4" REVEAL (WIDTH VARIES COORDINATE WITH PLAN), REFER TO DOOR, WINDOW, AND OPENING DETAILS, TYPICAL
A32	1/2" WALL REVEAL "Z" TYPE 5HR FIRE RATED P-TRY RESILIT
A33	NEW HALF HEIGHT WALL
A34	PATCH AND REPAIR SLAB AS REQUIRED TO LINE NEW CONDITIONS

FLOOR PLAN LEGEND

Room name
101
ROOM TAG
TOP = ROOM NAME
MIDDLE = ROOM NUMBER
WALL TAG
DENOTES WALL TYPE REFERENCE TO WALL LEGEND
DOOR TAG
TOP = DOOR NUMBER - REFERENCE TO DOOR SCHEDULE
BOTTOM = HARDWARE SET NUMBER
REVISION TAG
DENOTES SEQUENTIAL REVISION NUMBER
ELEVATION TAG
TOP = VIEW NUMBER
BOTTOM=SHEET NUMBER
SIDE=INT. ELEVATION NUMBER
KEYNOTE NUMBER
CASEWORK
CONCRETE WALL, SEE STRUCTURAL
EXISTING WALLS TO REMAIN, APPLY NEW WALL FINISHES, TYP. (U/ ALL AREAS INCLUDED IN CONTRACT. SEE ID DWGS FOR DETAILS
NEW WALLS PER WALL SCHEDULE, SEE FINISH DWGS FOR FINISHES
DETAIL TAG
TOP = VIEW NUMBER
BOTTOM=SHEET NUMBER
COLUMN TAG & GRID
NUMBER DENOTES COLUMN DESIGNATION
NORTH ARROW
WINDOW TAG
NUMBER DENOTES WINDOW TYPE AND REFERENCE TO WINDOW SCHEDULE
NEW DOOR, SEE DOOR SCHEDULE FOR DETAILS
EXISTING DOOR TO REMAIN. REFER TO DOOR SCHEDULE FOR REQUIRED MODIFICATIONS
AREA - NOT IN CONTRACT

GRAPHIC SCALES

SCALE: 0'-0 1/8" = 1'-0"
SCALE: 0'-0 1/16" = 1'-0"
SCALE: 0'-0 1/8" = 1'-0"
SCALE: 0'-0 1/4" = 1'-0"
SCALE: 0'-0 1/2" = 1'-0"
SCALE: 0'-0 3/4" = 1'-0"
SCALE: 0'-1" = 1'-0"
SCALE: 0'-1 1/2" = 1'-0"
SCALE: 0'-3" = 1'-0"

sas architects + planners, llc.
630 DUNDEE ROAD, SUITE 110 NORTHBROOK, IL 60062
Phone: 847 564-8333, Fax: 847 564-8866, www.sasarch.com

DAYCARE INTERIOR RENOVATION
CRATE & BARREL
1250 TECHNY RD., NORTHBROOK, IL 60062

LOWER LEVEL PROPOSED OVERALL FLOOR PLAN

REVISIONS

NO.	DESCRIPTION	DATE
	100% SD SUBMITTAL	05/22/23
	BID & PERMIT	08/01/23

KEY PLAN:

True North
Project North

SIGNATURE:

STATE OF ILLINOIS
DARIUSZ A. ZARNOWSKI
001-015449
LICENSED ARCHITECT

PROFESSIONAL DESIGN FIRM REGISTRATION NUMBER: 184.007199
STATE OF ILLINOIS LICENSE EXPIRES: APRIL 30, 2027
DRAWN BY: MD
APPROVED BY: AW/DAZ
DATE: 05/23/25
25010
SHEET NO.
A-102

PRINTED: 8/1/2023 3:42:07 PM
FILE LOCATION: I:\25010_C&B_Daycare_Central-IS_mgg\Architects\.rvt

PLAY SURFACING MATERIALS SCHEDULE				
QTY	ITEM	MANUFACTURER	DESCRIPTION	DETAIL LOCATION
EST 2,425 SF @ 12" DEPTH EST 125 CY	ENGINEERED WOOD FIBER SURFACING	FIBAR	SAFETY PLAY SURFACE	DETAIL 1 L-5.0
EST 145 SF @4" DEPTH EST 2 CY	WOOD CHIP PATH	THE MULCH CENTER	MAINTENANCE ACCESS PATH	DETAIL 2 L-5.0

FENCE SCHEDULE				
QTY	ITEM	MANUFACTURER	DESCRIPTION	DETAIL LOCATION
EST. 345 LN.FT.	FENCE	AMERISTAR	6' TALL BLACK STEEL PICKET FENCE	DETAIL 1 L-5.1
2	GATE	AMERISTAR	6' TALL, 5' WIDE BLACK STEEL PICKET GATE, SELF CLOSING, LATCHING, AND LOCKING GATE HARDWARE	DETAIL 2 L-5.1

FURNISHINGS SCHEDULE				
QTY	ITEM	MANUFACTURER	DESCRIPTION	DETAIL LOCATION
4	BENCH	VICTOR STANLEY	BENCHES ALONG PATH, SURFACE MOUNT TO CONCRETE	DETAIL 1 L-5.2
2	RECEPTACLE	VICTOR STANLEY	WASTE AND RECYCLE RECEPTACLE SURFACE MOUNT TO CONCRETE	DETAIL 2 L-5.2
1	STORAGE SHED	COMMUNITY PLAY THINGS	TOY AND EQUIPMENT STORAGE SHED	DETAIL 1 L-5.3
75 LN.FT	HORIZONTAL LOG BORDER	NATURES INSTRUMENTS	GARDEN BORDER AND EDGE RESTRAINT BETWEEN GARDEN /LAWN BED AND EWF	DETAIL 1 L-5.4
2	5 PIECE LOG CLUSTER IN LOG BORDER	NATURES INSTRUMENTS	GARDEN BORDER AND EDGE RESTRAINT BETWEEN GARDEN /LAWN BED AND EWF	DETAIL 2 L-5.4

GENERAL NOTES:

SITE FURNISHINGS ARE AS SHOWN ARE "BASIS OF DESIGN" ALL EQUIPMENT AND FEATURES TO BE CONFIRMED WITH OWNER AND THEY ARE A BASIS OF DESIGN AND ARE SUBJECT TO CHANGE.

SITE FURNISHINGS, SURFACING, AND MATERIALS SHOWN ON PLAN ARE NOT CONSIDERED SPECIFIC PLAY ELEMENTS.

OWNER IS REQUIRED TO MAINTAIN 12" DEPTH ENGINEERED WOOD FIBER PLAY SURFACE

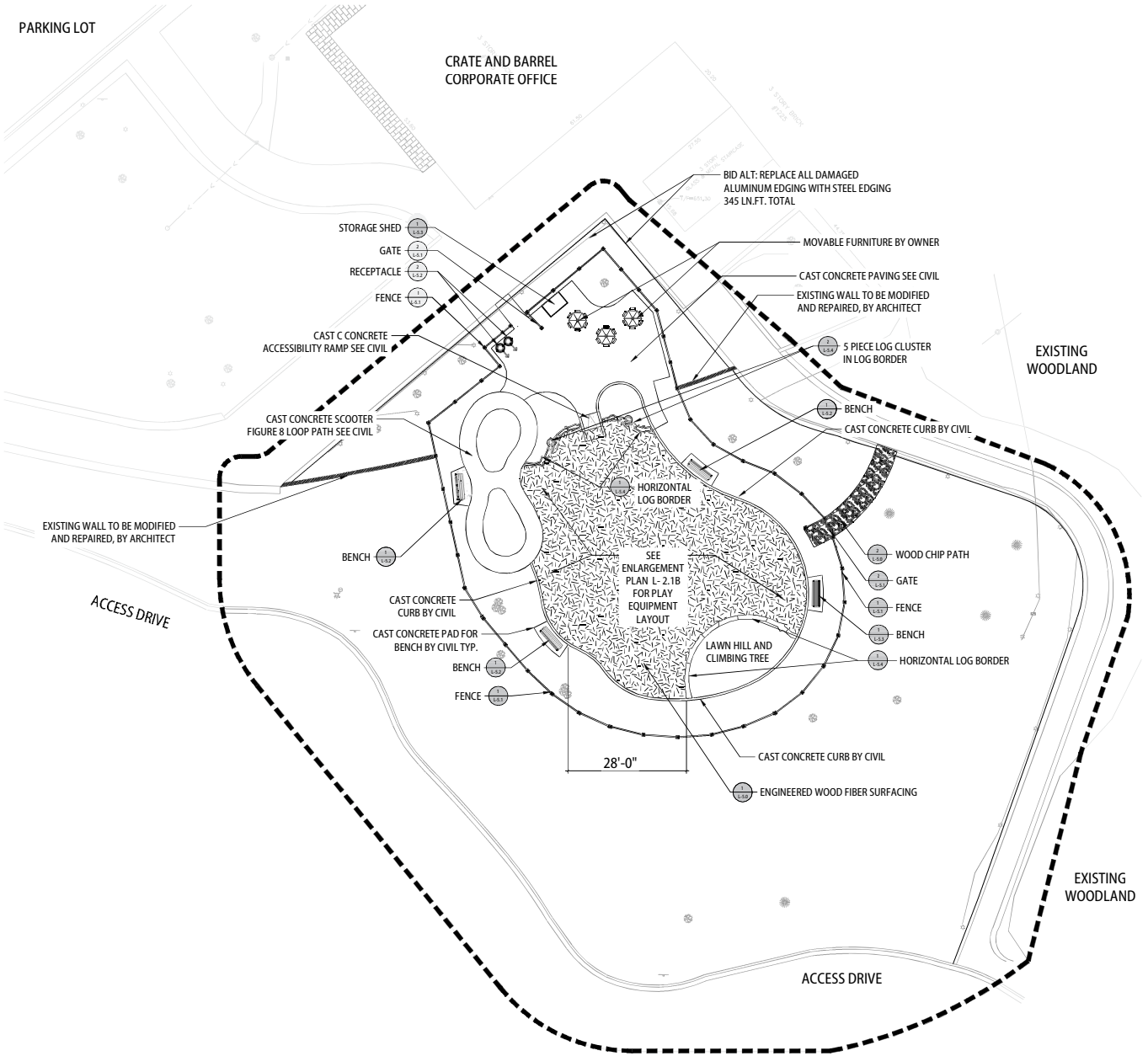

1 PLAY AREA SITE FURNISHING, SURFACING, AND MATERIALS PLAN

SCALE: 1"=10'- 0"

teska associates
627 Grove Street
Evanston, Illinois

DAYCARE INTERIOR RENOVATION
CRATE & BARREL
1250 TECHNY RD., NORTHBROOK , IL 60062

PLAY AREA SITE FURNISHING, SURFACING, AND MATERIALS PLAN

REVISIONS

NO	DESCRIPTION	DATE
	ISSUED FOR BID (PERMIT	5/1/23

SIGNATURE

REGISTERED LANDSCAPE ARCHITECT
DANIEL JEFFREY O'BRIAN
LIC. NO. 15-000806
EXPIRES 11/30/24
5/26/2023
STATE OF ILLINOIS

DRAWN BY DJO
APPROVED BY DJO
DATE 05/23/23
25010

SHEET NO L-2.1A

PLAY EQUIPMENT SCHEDULE				
QTY	ITEM	MANUFACTURER	DESCRIPTION	DETAIL LOCATION
1	OUTLAST EASEL ISLAND	COMMUNITY PLAY THINGS	4 SIDED OUTDOOR ART EASEL	DETAIL 2 L-5.3
1	OUTLAST STAGE	COMMUNITY PLAY THINGS	WOOD STAGE	DETAIL 3 L-5.3
4	WACKY POST	NATURES INSTRUMENTS	NATURE BASED PLAY EQUIPMENT	DETAIL1 L-5.5
8	LOG STEPPING ROUNDS	NATURES INSTRUMENTS	NATURE BASED PLAY EQUIPMENT	DETAIL 2 L-5.5
1	9 PIECE LOG OBSTACLE COURSE	NATURES INSTRUMENTS	NATURE BASED PLAY EQUIPMENT	DETAIL 1 L-5.6
1 +8	DISCOVERY WHEEL AND DISCOVERY WHEEL MEDALLIONS AND POST	EARTHSCAPE	NATURE BASED PLAY EQUIPMENT	DETAIL1 L-5.7
1	ALPINE PLAY HUT	EARTHSCAPE	NATURE BASED PLAY EQUIPMENT PLAY HOUSE	DETAIL1 L-5.8
1	PINE SMALL	EARTHSCAPE	NATURE BASED PLAY EQUIPMENT CLIMBER	DETAIL 1 L-5.9

GENERAL NOTES:

PLAY FEATURES AND EQUIPMENT AS SHOWN ARE "BASIS OF DESIGN" ALL EQUIPMENT AND FEATURES TO BE CONFIRMED WITH OWNER AND THEY ARE A BASIS OF DESIGN AND ARE SUBJECT TO CHANGE.

CONTRACTOR SHALL FOLLOW ALL MANUFACTURER REQUIREMENTS FOR FUNCTIONALLY CONNECTED PLAY STRUCTURES AND RELATED FALL ZONES.

ALL BRANDING, WAYFINDING, AND INFORMATION SIGNAGE BY OWNER

ALL MOVABLE CHILDREN FURNITURE BY OWNER

DISCOVERY WHEEL MEDALLION/POST TO FOLLOW EDGE OF LAWN , REFER TO LANDSCAPE PLANS

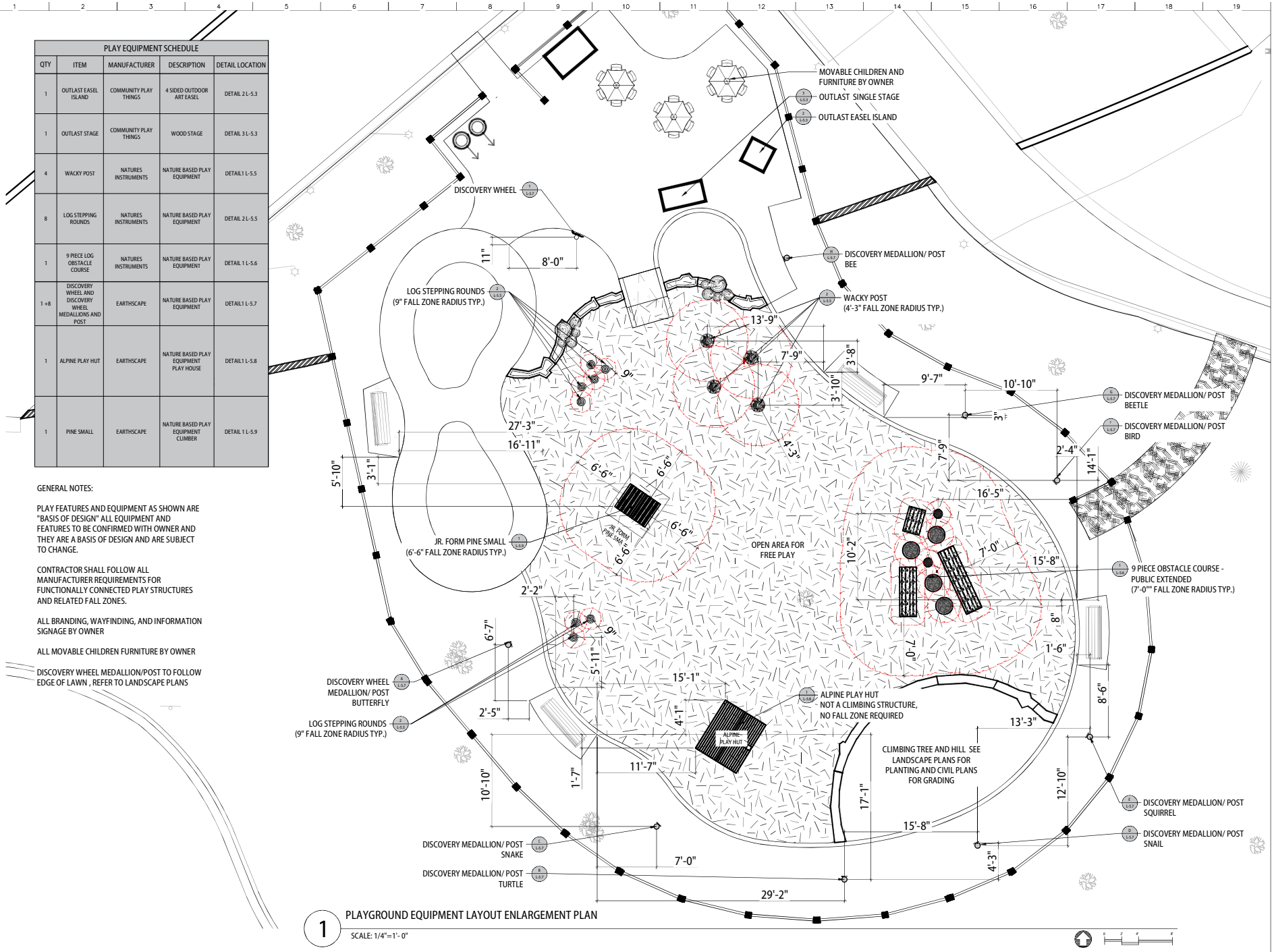

1 PLAYGROUND EQUIPMENT LAYOUT ENLARGEMENT PLAN

SCALE: 1/4"=1'- 0"

teska associates
627 Grove Street
Evanston, Illinois

DAYCARE INTERIOR RENOVATION
CRATE & BARREL
1250 TECHNY RD., NORTHBROOK , IL. 60062

PLAYGROUND EQUIPMENT LAYOUT ENLARGEMENT PLAN

REVISIONS		
NO	DESCRIPTION	DATE
	ISSUED FOR BID / PERMIT	5/1/25

SIGNATURE

DANIEL JEFFREY O'BRIAN, REGISTERED LANDSCAPE ARCHITECT, LIC. NO. 157-001305, EXPIRATION 11/30/2025, STATE OF ILLINOIS

DRAWN BY:	APPROVED BY:
DJO	DJO
25010	DATE: 05/23/25

SHEET NO.

L-2.1B

MATERIALS SCHEDULE				
QTY	ITEM	MANUFACTURER	DESCRIPTION	DETAIL LOCATION
405 SF	CONCRETE UNIT PAVER	UNILOCK	DRY SET 4' WIDE EMERGENCY ACCESS PATH	3-L-5.0

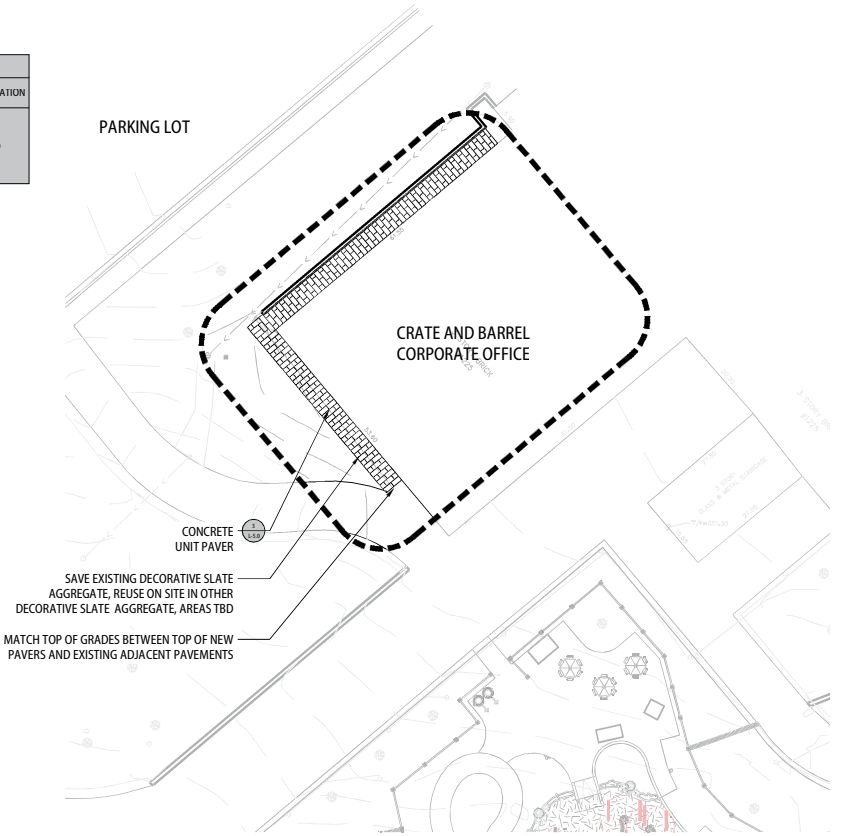

1 NORTH AREA MATERIALS AND FURNISHING PLAN

SCALE: 1"=10- 0"

teska associates
627 Grove Street
Evanston, Illinois

DAYCARE INTERIOR RENOVATION
CRATE & BARREL
1250 TECHNY RD., NORTHBROOK , IL. 60062

NORTH AREA MATERIALS AND FURNISHING PLAN

REVISIONS		
NO	DESCRIPTION	DATE
	ISSUED FOR BID/PERMIT	5/1/23

SIGNATURE

REGISTERED LANDSCAPE ARCHITECT
DANIEL JEFFREY O'BRIAN
LIC. NO. 15-001808
EXPIRES 11/30/2024
STATE OF ILLINOIS

DRAWN BY	APPROVED BY
DJO	DJO
DATE	
25010	05/23/23

SHEET NO

L-2.2

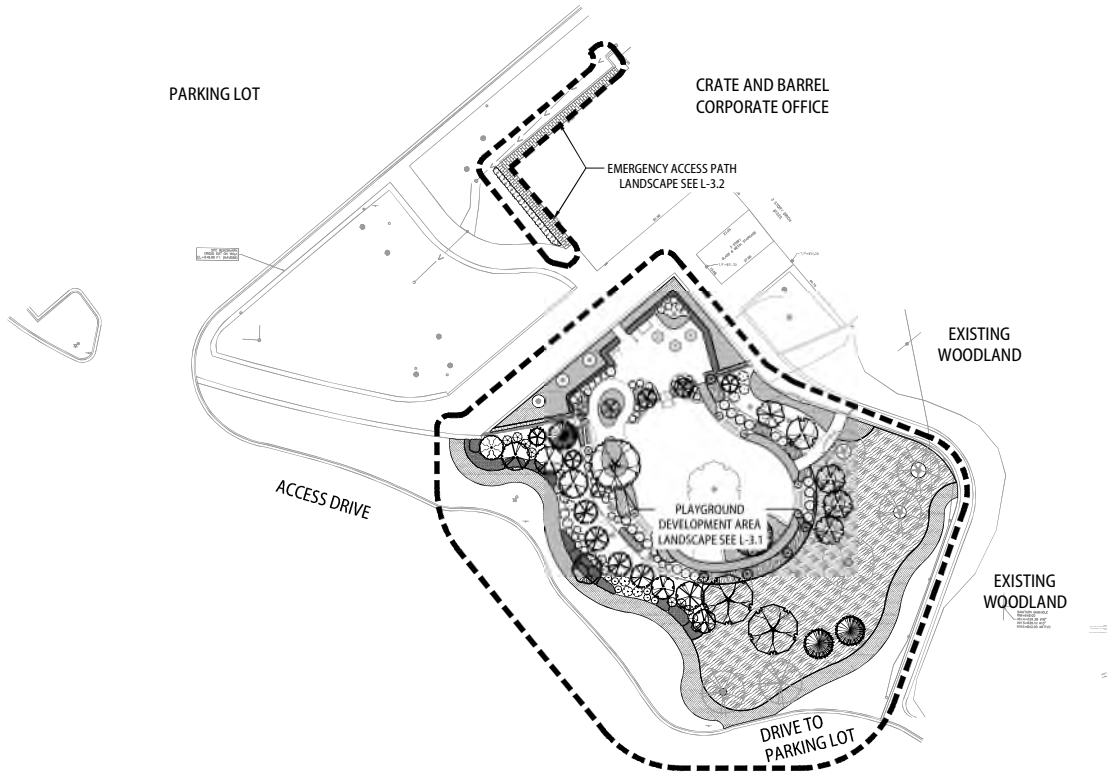

1 LANDSCAPE KEY PLAN

SCALE: 1"=20'-0"

teska associates
627 Grove Street
Evanston, Illinois

DAYCARE INTERIOR RENOVATION
CRATE & BARREL
1250 TECHNY RD., NORTHBROOK , IL. 60062

LANDSCAPE KEY PLAN

NO.	DESCRIPTION	DATE
	ISSUED FOR B/D PERMIT	8/1/25

SIGNATURE

REGISTERED LANDSCAPE ARCHITECT
DANIEL JEFFREY O'BRIAN
LIC. NO. 15-000808
EXP. 11/30/2026
STATE OF ILLINOIS

DRAWN BY:	APPROVED BY:
DJO	DJO
DATE:	
25010	05/23/25

SHEET NO.

L-3.0

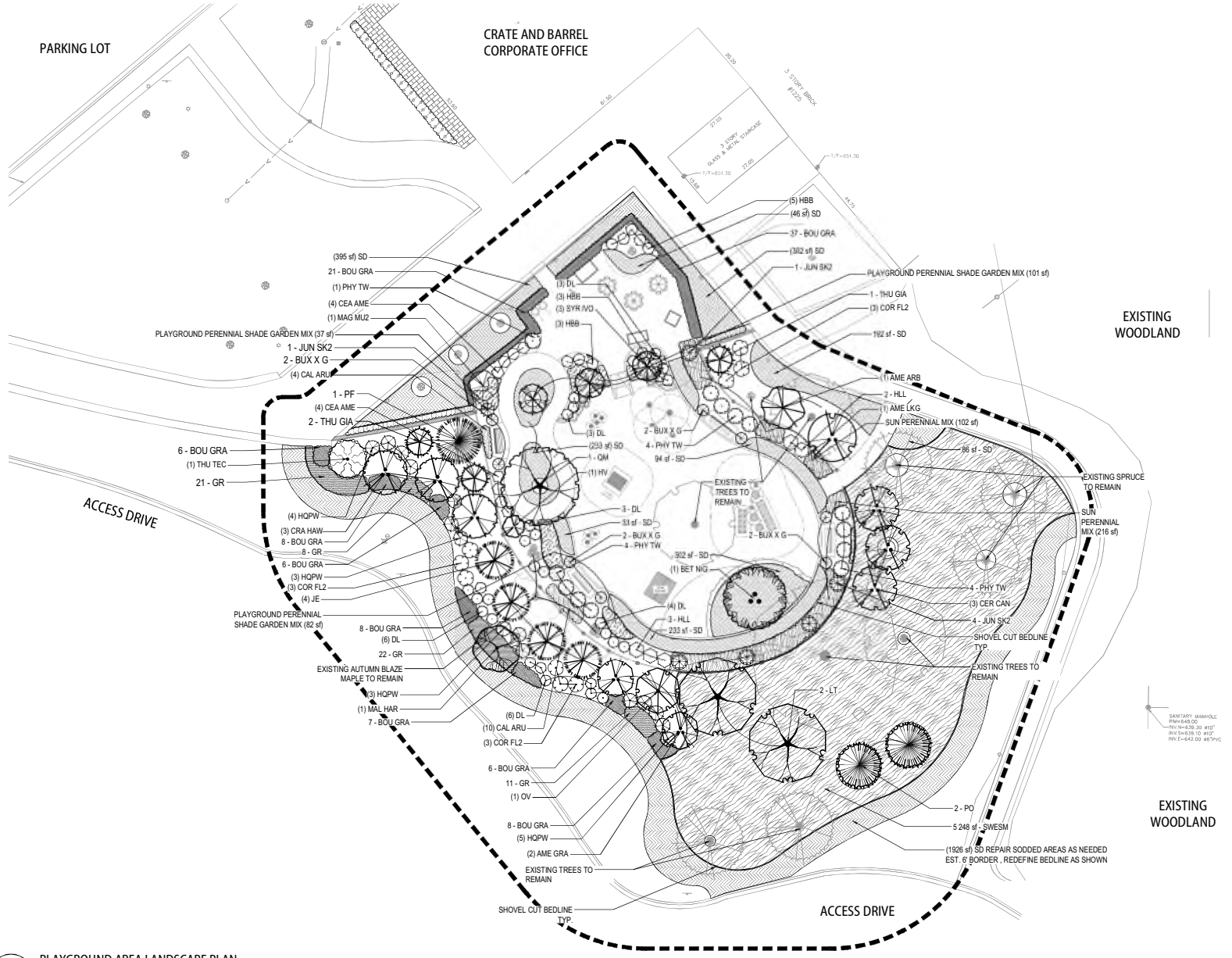

1 PLAYGROUND AREA LANDSCAPE PLAN

SCALE: 1"=10'- 0"

teska associates
627 Grove Street
Evanston, Illinois

DAYCARE INTERIOR RENOVATION
CRATE & BARREL
1250 TECHNY RD., NORTHBROOK , IL. 60062

PLAYGROUND AREA LANDSCAPE PLAN

REVISIONS		
NO.	DESCRIPTION	DATE
	ISSUED FOR BID /PERMIT	8/1/25

SIGNATURE

REGISTERED LANDSCAPE ARCHITECT
DANIEL JEFFREY O'BRIAN
LIC. NO. 15-000608
EXPIRES 11/30/2026
STATE OF ILLINOIS

DRAWN BY:	APPROVED BY:
DJO	DJO
DATE:	
25010	05/23/25

SHEET NO.

L-3.1

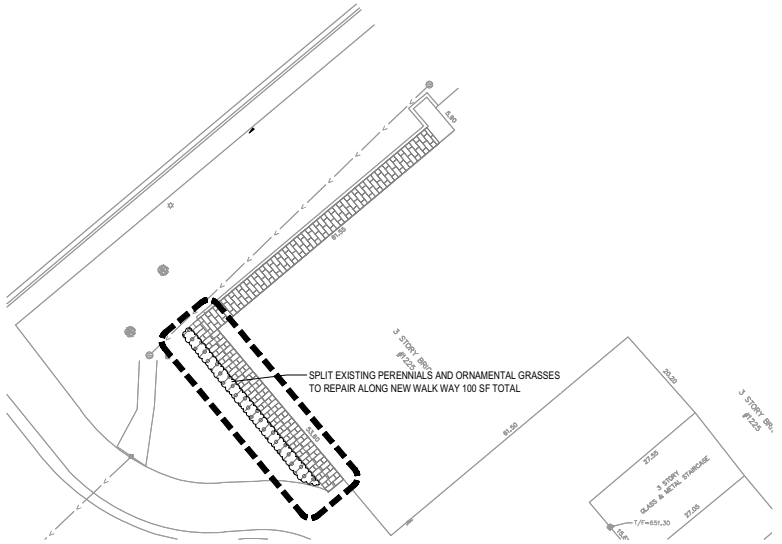

1 EMERGENCY ACCESS PATH LANDSCAPE REPAIR AREAS

SCALE: 1"=10'-0"

teska
associates
627 Grove Street
Evanston, Illinois

DAYCARE INTERIOR RENOVATION
CRATE & BARREL
1250 TECHNY RD., NORTHBROOK , IL. 60062

NORTH AREAS LANDSCAPE PLAN

REVISIONS

NO.	DESCRIPTION	DATE
	ISSUED FOR BID PERMIT	8/1/25

SIGNATURE

REGISTERED LANDSCAPE ARCHITECT
DANIEL JEFFREY O'BRIEN
LIC. NO. 156-001808
EXPIRES 11/30/2026
Date 05/07/25
STATE OF ILLINOIS

DRAWN BY:	APPROVED BY:
DJO	DJO
DATE:	
25010	05/23/25

SHEET NO.

L-3.2

Savanna & Woodland Edge

Savannas are partially shaded plant communities found in the transitional zone between forest and grassland. These shade tolerant plants grow best with a few hours of direct sunlight each day.

WSWE Mesic to Dry | Part Sun to Full Shade | 14.50 PLS LBS/Acre | 80.00 Seeds/ Sq. Ft

Wildflowers		Oz/Acre
Agastache scrophulariaefolia	Purple Giant Hyssop	1.00
Allium cernuum	Nodding Onion	8.00
Anemone virginiana	Tall Anemone	0.50
Aquilegia canadensis	Wild Columbine	1.50
Aster sagittifolius	Arrow-Leaved Aster	1.00
Chamaecrista fasciculata	Partridge Pea	13.00
Coreopsis lanceolata	Lance-Leaf (Sand) Coreopsis	2.00
Coreopsis palmata	Prairie Coreopsis	1.50
Echinacea pallida	Pale Purple Coneflower	4.00
Eupatorium purpureum	Purple Joe Pye Weed	0.75
Helianthus strumosus	Pale-Leaved Sunflower	2.00
Heliopsis helianthoides	Early Sunflower	10.00
Hypericum pyramidatum	Great St. John's Wort	0.25
Kuhnia eupatorioides	False Boneset	2.00
Liatris pycnostachya	Prairie Blazing Star	1.50
Monarda fistulosa	Wild Bergamot	1.50
Penstemon digitalis	Foxglove Beard Tongue	1.00
Ratibida pinnata	Yellow Coneflower	2.00
Rudbeckia hirta	Black-Eyed Susan	4.00
Rudbeckia subtomentosa	Sweet Black-Eyed Susan	2.00
Scrophularia lanceolata	Early Figwort	0.25
Solidago speciosa	Showy Goldenrod	0.75
Tradescantia ohiensis	Ohio Spiderwort	3.00
Veronicastrum virginicum	Culver's Root	0.50
Zizia aurea	Golden Alexanders	8.00
Grasses, Sedges, & Rushes		**Oz/Acre**
Andropogon gerardii	Big Bluestem	8.00
Bouteloua curtipendula	Side Oats Grama	16.00
Bromus ciliatus	Fringed Brome	6.00
Bromus kalmii	Prairie Brome	10.00
Carex bicknellii	Copper-Shouldered Oval Sedge	2.00
Diarrhena americana	Beak Grass	4.00
Elymus canadensis	Canada Wild Rye	64.00

Elymus villosus	Silky Wild Rye	16.00
Hystrix patula	Bottlebrush Grass	16.00
Schizachyrium scoparium	Little Bluestem	8.00
Sorghastrum nutans	Indian Grass	10.00

*Note: Seed mix compositions are subject to change depending on seasonal availability.

SAVANNA AND WOODLAND EDGE SEED MIX PROFILE SPEC

TREE REPLACEMENT NOTES

PER VILLAGE OF NORTHBROOK ORDINANCE:

TREE SIZE REQUIREMENTS
SINGLE STEM TREES SHOULD BE 21/2 TO 3 INCHES IN CALIPER. CONIFERS AND MULTI-STEMMED ORNAMENTALS THAT MEASURE 8-10 FEET TALL WILL COUNT AS 21/2 CALIPER INCHES, 10-12 FEET TALL AS 3 CALIPER INCHES, 12-14 FEET TALL AS 3.5 CALIPER INCHES, 14-16 FEET TALL AS 4.0 CALIPER INCHES.

28 TREES REQUIRED FOR FOR REPLACEMENT VALUE, SEE TREE PRESERVATION L-1.1

28 TREES PROVIDED TO BE REPLACEMENT VALUE, PER VILLAGE OF NORTHBROOK SIZE AND SPECIES STANDARDS

ARBORVITAE SPECIES DO NOT QUALIFY FOR REPLACEMENT FACTOR

PLANT REMARKS	
PLANT CATEGORY	ALL PLANT MATERIAL TO BE SELECTED AS SHOWN BELOW.
SHADE TREES	STRAIGHT CENTRAL LEADER, FULL EVEN CROWN, PRUNE ONLY AFTER PLANTING
EVERGREEN TREES	FULL, EVENLY SHAPED WITH BRANCHING TO GROUND
ORNAMENTAL TREES	FULL, WELL BALANCED WITH FULL APPEARANCE
SHRUBS	FULL, WELL ROOTED, EVENLY SHAPED
ORNAMENTAL GRASSES	FULL, WELL ROOTED, EVENLY SHAPED
PERENNIALS	FULL, WELL ROOTED, EVENLY SHAPED
GROUNDCOVERS	FULL, WELL ROOTED, EVENLY SHAPED

PERENNIAL MIX AREA NOTES:
PERENNIALS TO BE INTER-PLANTED EVENLY AND BLENDED THROUGHOUT BEDS. FOLLOW PERCENT, SPACING, AND QUANTITIES AS SHOWN

PLANT REMARKS
SCALE: NTS

PLANT SCHEDULE PLAYGROUND DEVELOPMENT PLANTING

SYMBOL	CODE	QTY	BOTANICAL / COMMON NAME	SIZE	CONTAINER	
SHADE TREES						
	LT	2	LIRIODENDRON TULIPIFERA / TULIP TREE QUALIFIES FOR TREE REPLACEMENT	2.5" CAL.	B&B	
	OV	1	OSTRYA VIRGINIANA / AMERICAN HOPHORNBEAM QUALIFIES FOR TREE REPLACEMENT	2.5" CAL.	B&B	
	QM	1	QUERCUS MACROCARPA / BURR OAK QUALIFIES FOR TREE REPLACEMENT	2.5" CAL.	B&B	
EVERGREEN TREES						
	JE	4	JUNIPERUS VIRGINIANA / EASTERN RED CEDAR QUALIFIES FOR TREE REPLACEMENT	8' HT.	B&B	
	PO	2	PICEA OMORIKA / SERBIAN SPRUCE QUALIFIES FOR TREE REPLACEMENT	8' HT.	B&B	
	PF	1	PINUS FLEXILIS `VANDERWOLF`S PYRAMID` / VANDERWOLF`S PYRAMID PINE QUALIFIES FOR TREE REPLACEMENT	8' HT.	B&B	
	THU TEC	1	THUJA OCCIDENTALIS `TECHNY` / TECHNY ARBORVITAE DOES NOT QUALIFY FOR TREE REPLACEMENT	8' HT.	B&B	
	THU GIA	3	THUJA PLICATA `GREEN GIANT` / `GREEN GIANT` ARBORVITAE DOES NOT QUALIFY FOR TREE REPLACEMENT	8' HT.	B&B	
ORNAMENTAL						
	AME ARB	1	AMELANCHIER ARBOREA / DOWNY SERVICEBERRY QUALIFIES FOR TREE REPLACEMENT	8' HT., MULTI-STEM	B&B	
	AME LKG	1	AMELANCHIER LAEVIS / ALLEGHENY SERVICEBERRY MULTI-TRUNK QUALIFIES FOR TREE REPLACEMENT	8' HT., MULTI-STEM	B&B	
	AME GRA	2	AMELANCHIER X GRANDIFLORA `AUTUMN BRILLIANCE` / `AUTUMN BRILLIANCE` SERVICEBERRY QUALIFIES FOR TREE REPLACEMENT	8' HT., MULTI-STEM	B&B	
	BET NIG	1	BETULA NIGRA / RIVER BIRCH MULTI-TRUNK QUALIFIES FOR TREE REPLACEMENT	8' HT., MULTI-STEM	B&B	
	CER CAN	3	CERCIS CANADENSIS / EASTERN REDBUD QUALIFIES FOR TREE REPLACEMENT	8' HT., MULTI-STEM	B&B	
	CRA HAW	3	CRATAEGUS CRUSGALLI `CRUZAM` / CRUZAM THORNLESS COCKSPUR HAWTHORN QUALIFIES FOR TREE REPLACEMENT	8' HT.	B&B	
	HV	1	HAMAMELIS VIRGINIANA / COMMON WITCH HAZEL QUALIFIES FOR TREE REPLACEMENT	8' LOW BRANCH / MULTI-STEM	B&B	
	MAG MU2	1	MAGNOLIA STELLATA / STAR MAGNOLIA MULTI-TRUNK QUALIFIES FOR TREE REPLACEMENT	8' HT LOW BRANCHING	B&B	
	MAL HAR	1	MALUS X `HARGOZAM` / HARVEST GOLD CRAB APPLE QUALIFIES FOR TREE REPLACEMENT	8' HT LOW BRANCHING	B&B	
	SYR IVO	3	SYRINGA RETICULATA `IVORY SILK` SINGLE STEM / IVORY SILK JAPANESE TREE LILAC QUALIFIES FOR TREE REPLACEMENT	2.5" CAL.	B&B	
SHRUBS						
	BUX X G	8	BUXUS X `GREEN GEM` / GREEN GEM BOXWOOD	30"	B&B/CG	
	CEA AME	8	CEANOTHUS AMERICANUS / NEW JERSEY TEA	24"	CG	
	COR FL2	9	CORNUS SERICEA 'FLAVIRAMEA' / YELLOW TWIG DOGWOOD	24"	CG	
	DL	27	DIERVILLA LONICERA / DWARF BUSH HONEYSUCKLE	24"	CG	
	HLL	5	HYDRANGEA PANICULATA `LITTLE LIME` / LITTLE LIME HYDRANGEA	36"	CG	
	HBB	11	HYDRANGEA PANICULATA 'BOBO' / PANICLE HYDRANGEA	24"	CG	
	HQPW	15	HYDRANGEA QUERCIFOLIA `PEE WEE` / PEE WEE OAKLEAF HYDRANGEA	36"	CG	
	JUN SK2	6	JUNIPERUS SCOPULORUM 'SKYROCKET' / SKYROCKET JUNIPER	48"		
	PHY TW	13	PHYSOCARPUS OPULIFOLIUS 'SMPOTW' TM / TINY WINE NINEBARK	24"	CG	
SYMBOL	CODE	QTY	BOTANICAL / COMMON NAME	SIZE	CONTAINER	SPACING
GROUND COVERS						
		318 SF	SUN PERENNIAL MIX			
	ECH P96	36	ECHINACEA PURPUREA 'PRAIRIE SPLENDOR' / PRAIRIE SPLENDOR CONEFLOWER	1 GAL.	POT	25% @ 18" o.c.
	RF	36	RUDBECKIA FULGIDA `GOLDSTURM` / GOLDSTURM BLACK-EYED SUSAN	1 GAL.	POT	25% @ 18" o.c.
	SAL WEW	36	SALVIA NEMOROSA 'WESUWE' / WESUWE MEADOW SAGE	1 GAL.	POT	25% @ 18" o.c.
	SPO HET	36	SPOROBOLUS HETEROLEPIS / PRAIRIE DROPSEED	1 GAL.	POT	25% @ 18" o.c.
		220 SF	PLAYGROUND PERENNIAL SHADE GARDEN MIX			
	CAR PYL	25	CAREX PENSYLVANICA / PENNSYLVANIA SEDGE	1 GAL.	POT	25% @ 18" o.c.
	HOS XFR	25	HOSTA X 'FRAGRANT DREAM' / FRAGRANT DREAM HOSTA	1 GAL.	POT	25% @ 18" o.c.
	PHL WIL	25	PHLOX DIVARICATA / WOODLAND PHLOX	1 GAL.	POT	25% @ 18" o.c.
	TIA COR	25	TIARELLA CORDIFOLIA / FOAMFLOWER	1 GAL.	POT	25% @ 18" o.c.
PERENNIALS						
	GR	62	GERANIUM X `ROZANNE` / ROZANNE CRANESBILL	1 GAL.	POT	24" o.c.
ORNAMENTAL GRASS						
	BOU GRA	107	BOUTELOUA GRACILIS / BLUE GRAMA GRASS	1 GAL.	POT	24" o.c.
	CAL ARU	37	CALAMAGROSTIS ARUNDINACEA `KARL FOERSTER` / FOERSTER`S FEATHER GRASS	1 GAL.	POT	24" o.c.
SEED MIX						
	SWESM	5,248 SF	AGRECOL SAVANNA/WOODLAND EDGE SEED MIX / SAVANNA/WOODLAND EDGE SEED MIX	SEED	14.5#/AC	
SOD/SEED						
	SD	3,865 SF	SOD DROUGHT TOLERANT LAWN / SODDED LAWN TURF	SOD		

PLANT SCHEDULE NORTH AREA

SYMBOL	CODE	QTY	BOTANICAL / COMMON NAME	SIZE	SPACING
GROUND COVERS					
PERENNIALS		95 SF	SPLIT EXISTING PERENNIALS AND ORNAMENTAL GRASSES		

1 PLANT SCHEDULES
NTS

teska associates
627 Grove Street
Evanston, Illinois

DAYCARE INTERIOR RENOVATION
CRATE & BARREL
1250 TECHNY RD., NORTHBROOK , IL. 60062

PLANT SCHEDULES

REVISIONS

NO	DESCRIPTION	DATE
	ISSUED FOR BD. PERMIT	8/1/25

SIGNATURE

REGISTERED LANDSCAPE ARCHITECT
DANIEL JEFFREY O'BRIAN
LIC. NO. 156-001805
EXPIRES: 11/30/2024
STATE OF ILLINOIS

DRAWN BY: DJO
APPROVED BY: DJO
DATE: 05/23/25
JOB NO. 25010
SHEET NO. L-4.0

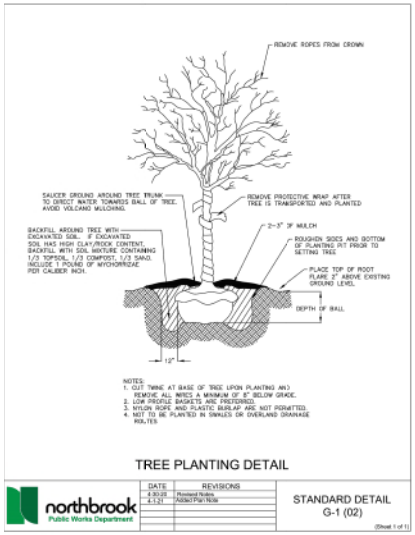

1 TYP. DECIDUOUS TREE PLANTING DETAIL
SCALE: NTS

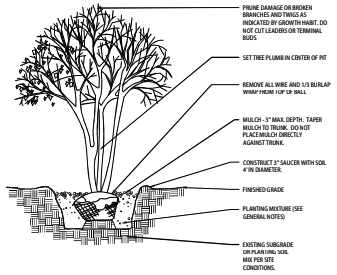

2 TYP. ORNAMENTAL TREE PLANTING DETAIL
SCALE: NTS

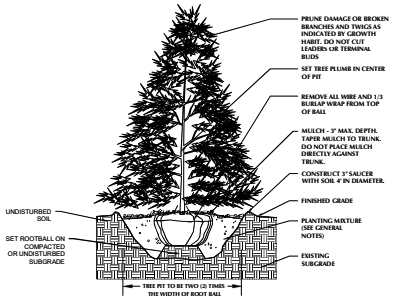

3 TYP. EVERGREEN TREE PLANTING DETAIL
SCALE: NTS

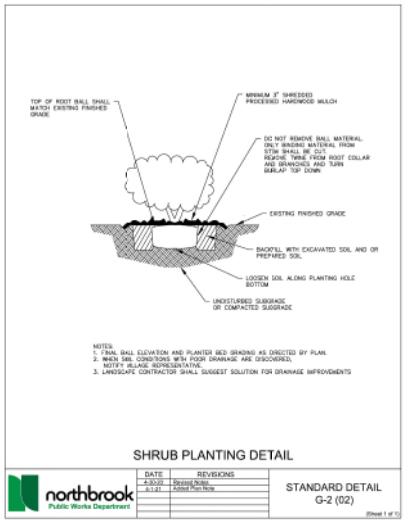

4 TYP. SHRUB PLANTING DETAIL
SCALE: NTS

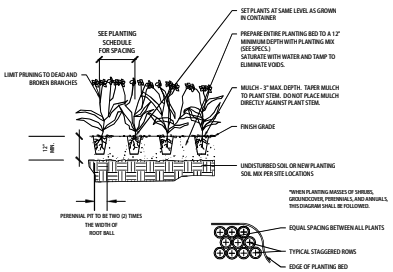

5 TYP. PERENNIAL PLANTING DETAIL
SCALE: NTS

teska associates
627 Grove Street
Evanston, Illinois

DAYCARE INTERIOR RENOVATION
CRATE & BARREL
1250 TECHNY RD., NORTHBROOK, IL. 60062

PLANTING DETAILS

REVISIONS
NO	DESCRIPTION	DATE
	ISSUED FOR BID PERMIT	8/1/25

SIGNATURE

REGISTERED LANDSCAPE ARCHITECT
DANIEL JEFFREY O'BRIAN
LIC. NO. 001808
EXPIRES 11/30/2026
STATE OF ILLINOIS
05/23/25

DRAWN BY: DJO
APPROVED BY: DJO
DATE: 05/23/25
25010
SHEET NO.
L-4.1

SITE FURNISHINGS, SURFACING, AND MATERIALS ARE AS SHOWN ARE "BASIS OF DESIGN" TO BE CONFIRMED WITH OWNER AND ARE SUBJECT TO CHANGE.

ENGINEERED WOOD FIBER SAFETY SURFACE SYSTEM.
BASIS OF DESIGN:
MANUFACTURER:
FIBAR PLAYGROUND SURFACES OR EQUAL
THE FIBAR GROUP, LLC
80 BUSINESS PARK DRIVE, SUITE 300
ARMONK, NY 10504–1705
p. 800–342–2721
www.fibar.com

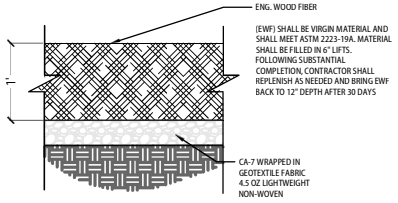

INSTALL PER MANUFACTURERS SPECIFICATIONS AND REQUIREMENTS

PRODUCT INFO:	
PRODUCT NAME:	ENGINEERED WOOD FIBER SAFETY SURFACE SYSTEM
MANUFACTURER:	FIBAR
QTY	95 CY FINAL TBD
COLOR/FINISH:	NATURAL
EDGE RESTRAINT	CAST CONCRETE CURB BY CIVIL OR NATURAL LOG EDGE BORDER

1 ENGINEERED WOOD FIBER SAFETY SURFACE SYSTEM
SCALE: NTS

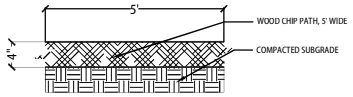

PRODUCT INFO:	
PRODUCT NAME:	WOOD CHIPS
MANUFACTURER:	THE MULCH CENTER
QTY	2 CU/YD
COLOR/FINISH:	NATURAL
EDGE RETRAINT	BLACK STEEL EDGING

2 WOOD CHIP PATH
SCALE: NTS

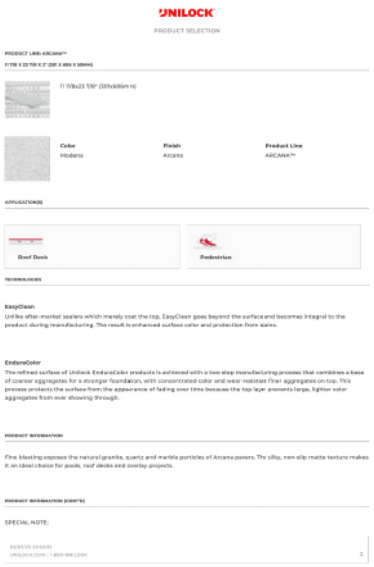

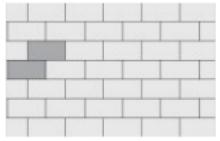

ARCANA 12X24 RB 1

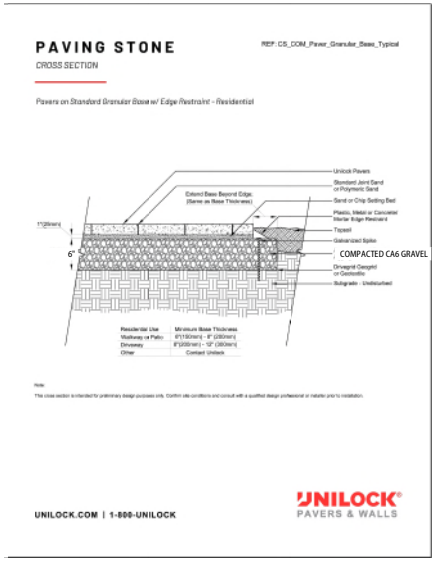

INSTALL PER MANUFACTURERS SPECIFICATIONS AND REQUIREMENTS

PRODUCT INFO:	
PRODUCT NAME:	ARCANA
MANUFACTURER:	UNILOCK
SIZE	12X24
PATTERN	ARCANA RB 1
COLOR	MODENA
FINISH	ARCANA
EDGE RESTRAINT	PLASTIC EDGE RESTRAINT WITH GALVANIZED STAKE
QTY	400 SF

3 CONCRETE UNIT PAVER
SCALE: NTS

teska associates
627 Grove Street
Evanston, Illinois

DAYCARE INTERIOR RENOVATION
CRATE & BARREL
1250 TECHNY RD., NORTHBROOK , IL. 60062

SITE SURFACING

REVISIONS

NO	DESCRIPTION	DATE
	ISSUED FOR BID PERMIT	8/1/25

SIGNATURE

REGISTERED LANDSCAPE ARCHITECT
DANIEL JEFFREY O'BRIAN
LIC. NO. 157-001808
EXPIRES 11/30/26
STATE OF ILLINOIS

DRAWN BY: DJO
APPROVED BY: DJO
DATE: 05/23/25
25010
SHEET NO.
L-5.0

SITE FURNISHINGS, SURFACING, AND MATERIALS ARE AS SHOWN ARE "BASIS OF DESIGN" TO BE CONFIRMED WITH OWNER AND ARE SUBJECT TO CHANGE.

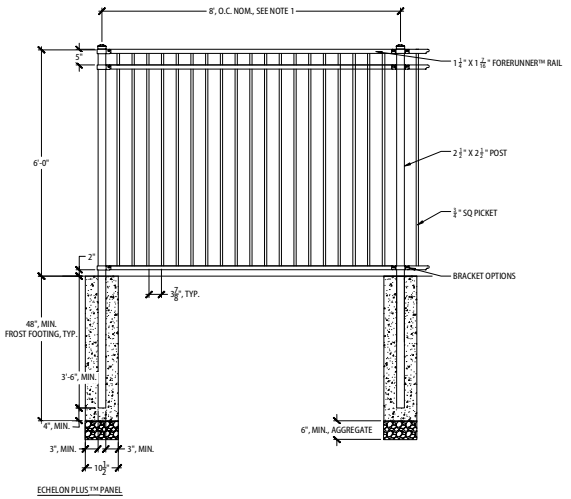

ECHELON PLUS™ PANEL

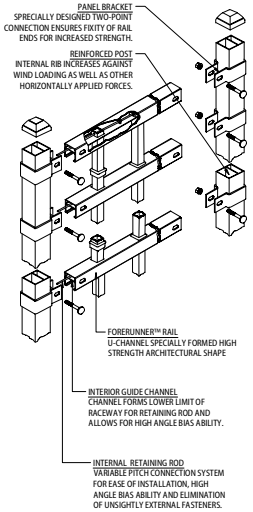

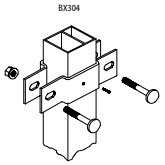

OPTIONAL LINE BOULEVARD BRACKET

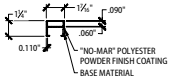

FORERUNNER™ RAIL

NOTES:
1. VALUES SHOWN ARE NOMINAL AND NOT TO BE USED FOR INSTALLATION PURPOSES. SEE PRODUCT SPECIFICATION FOR INSTALLATION REQUIREMENTS.

IBC COMPLIANCE
MAJESTIC STYLE WITH 3-RAIL CONFIGURATIONS SHALL MEET IBC COMPLIANCE. PANEL, POST AND BRACKET ASSEMBLIES SHALL BE SUBJECTED TO STRUCTURAL PERFORMANCE TESTING ACCORDING TO CHAPTER 17 - STRUCTURAL TESTS AND SPECIAL INSPECTIONS - INTERNATIONAL BUILDING CODE (IBC) 2018. PHYSICAL TESTING TO BE COMPLETED BY ACCREDITED THIRD PARTY TESTING FACILITY. COMPLETED ASSEMBLY SHALL DEMONSTRATE LOADING CAPACITY OF 2.5 TIMES PRESCRIBED DESIGN LOADS FOUND IN SECTION 1607.8.1, 1607.8.1.1 AND 1607.8.1.2 OF IBC 2018 FOR HANDRAILS AND GUARDS.

INSTALL PER MANUFACTURERS SPECIFICATIONS AND REQUIREMENTS

PRODUCT INFO:	
PRODUCT NAME:	ECHELON PLUS
MANUFACTURER:	AMERISTAR
STYLES:	MAJESTIC
NUMBER OF RAILS:	3
MATERIAL	STEEL
COLOR/FINISH:	POWDERCOATED BLACK
MOUNTING:	EMBEDDED

1 FENCE
SCALE: 3/4" = 1'-0"

NOTES:
1. ADDITIONAL STYLES OF GATE HARDWARE ARE AVAILABLE ON REQUEST. THIS COULD CHANGE THE LATCH & HINGE CLEARANCE.

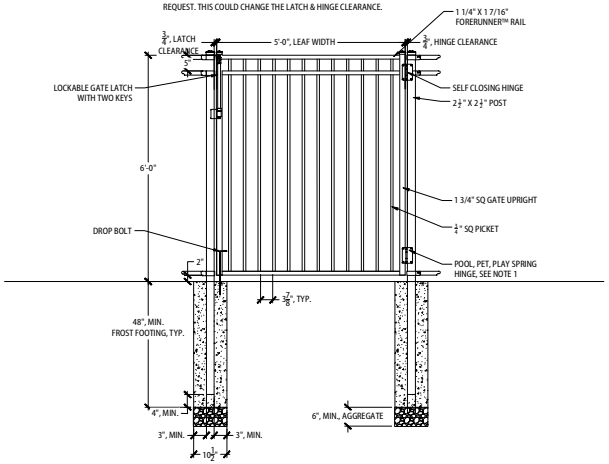

ECHELON PLUS™ SINGLE GATE ARRANGEMENT



INSTALL PER MANUFACTURERS SPECIFICATIONS AND REQUIREMENTS

PRODUCT INFO:	
PRODUCT NAME:	ECHELON PLUS
MANUFACTURER:	AMERISTAR
STYLES:	MAJESTIC
NUMBER OF RAILS:	3
HINGE	TRUE CLOSE HINGE, 8000-2112
DROP BOLT	DLB 100
LATCH	TOP PULL MAGNA LATCH, ML3TPKA , FINAL LATCH TO BE APPROVED BY OWNER
COLOR/FINISH:	POWDER COATED BLACK
MOUNTING:	EMBEDDED

NOTES:
1. ASSEMBLE ACCORDING TO MANUFACTURER INSTALLATION INSTRUCTIONS.
2. CONTRACTOR SHALL PROVIDE (2) KEYS PER GATE TO CRATE AND BARREL AND DAYCARE OPERATOR
3. GC TO VERIFY ALL FINAL FINISHES AND HARDWARE WITH CRATE AND BARREL
4. ALL ACCESS CONTROL INTERGATION AT GATES IS BY OWNER AND REQUIRED, GC TO COORDINATE FINAL SELECTIONS

2 GATE
SCALE: 3/4" = 1'-0"

teska associates
627 Grove Street
Evanston, Illinois

DAYCARE INTERIOR RENOVATION
CRATE & BARREL
1250 TECHNY RD., NORTHBROOK , IL. 60062

SITE FENCE AND GATE DETAILS

REVISIONS

NO.	DESCRIPTION	DATE
	ISSUED FOR BID PERMIT	8/1/25

SIGNATURE

REGISTERED LANDSCAPE ARCHITECT
DANIEL JEFFREY O'BRIEN
LIC. NO. 156-001808
EXPIRES 11/30/2026
STATE OF ILLINOIS

DRAWN BY:	APPROVED BY:
DJO	DJO
DATE:	
25010	05/23/25

SHEET NO.
L-5.1

PRODUCT INFO:	
PRODUCT NAME:	STE-20-W
MANUFACTURER:	VICTOR STANLEY
STYLES:	MAJESTIC
QTY	4
COLOR/FINISH:	WHITE
WOOD SLATS	KEBONY
MOUNTING:	SURFACE MOUNT WITH ANCHOR BOLTS TO CAST CONCRETE PADS



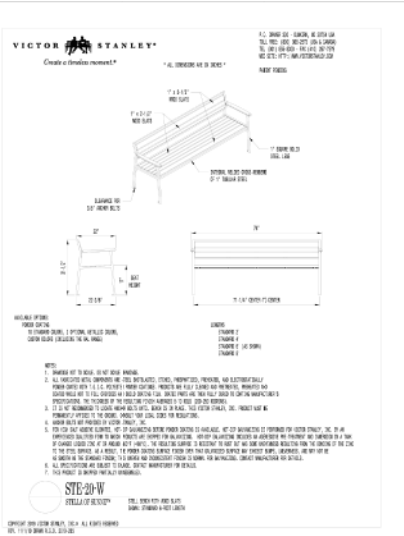

1 BENCH
SCALE: NTS

PRODUCT INFO:	
PRODUCT NAME:	REN-45TD-W
MANUFACTURER:	VICTOR STANLEY
QTY	2 TOTAL (LITTER AND RECYCLE DELINEATE WITH DECAL)
COLOR/FINISH:	WHITE
WOOD SLATS	KEBONY
LID	DOME
MOUNTING:	SURFACE MOUNT WITH ANCHOR BOLTS TO CAST CONCRETE PADS





2 RECEPTACLE (LITTER AND RECYCLE)
SCALE: NTS

SITE FURNISHINGS, SURFACING, AND MATERIALS ARE AS SHOWN ARE "BASIS OF DESIGN" TO BE CONFIRMED WITH OWNER AND ARE SUBJECT TO CHANGE.

teska associates
627 Grove Street
Evanston, Illinois

DAYCARE INTERIOR RENOVATION
CRATE & BARREL
1250 TECHNY RD., NORTHBROOK , IL. 60062

SITE FURNISHINGS DETAILS

REVISIONS

NO	DESCRIPTION	DATE
	ISSUED FOR BID /PERMIT	8/1/25

SIGNATURE

REGISTERED LANDSCAPE ARCHITECT
DANIEL JEFFREY O'BRIAN
LIC. NO. 156-001808
EXPIRES: 11/30/2026
STATE OF ILLINOIS

DRAWN BY:	APPROVED BY:
DJO	DJO
DATE:	
25010	05/23/25

SHEET NO.
L-5.2

SITE FURNISHINGS, SURFACING, AND MATERIALS ARE AS SHOWN ARE "BASIS OF DESIGN" TO BE CONFIRMED WITH OWNER AND ARE SUBJECT TO CHANGE.



PRODUCT INFO:	
PRODUCT NAME:	W301 OUTLAST SHED
MANUFACTURER:	COMMUNITY PLAYTHINGS
DIMENSIONS (HXWXL):	62" X 40 3/4" X 60"
QTY	1
MOUNTING:	FREESTANDING

1 STORAGE SHED
SCALE: NTS

PRODUCT INFO:	
PRODUCT NAME:	W503 OUTLAST EASLE ISLAND
MANUFACTURER:	COMMUNITY PLAYTHINGS
DIMENSIONS (HXWXL):	35" W x 35"D x 53 3/4"t
QTY	1
MOUNTING:	FREESTANDING



2 EASEL ISLAND
SCALE: NTS

PRODUCT INFO:	
PRODUCT NAME:	W531 SINGLE OUTLAST STAGE
MANUFACTURER:	COMMUNITY PLAYTHINGS
DIMENSIONS (HXWXL):	30"D x 60"W
QTY	1
MOUNTING:	FREESTANDING



3 STAGE
SCALE: NTS

teska
architects
627 Grove Street
Evanston, Illinois

DAYCARE INTERIOR RENOVATION
CRATE & BARREL
1250 TECHNY RD., NORTHBROOK , IL. 60062

SITE FURNISHINGS

REVISIONS

NO	DESCRIPTION	DATE
	ISSUED FOR BID PERMIT	5/1/25

SIGNATURE:

REGISTERED LANDSCAPE ARCHITECT
DANIEL JEFFREY O'BRIEN
LIC. NO. 157-001304
EXPIRES 11/30/26
STATE OF ILLINOIS

DRAWN BY:	APPROVED BY:
DJO	DJO
DATE:	
25010	05/23/25

SHEET NO.

L-5.3

SITE FURNISHINGS, SURFACING, AND MATERIALS ARE AS SHOWN ARE "BASIS OF DESIGN" TO BE CONFIRMED WITH OWNER AND ARE SUBJECT TO CHANGE.



STYLE IMAGE

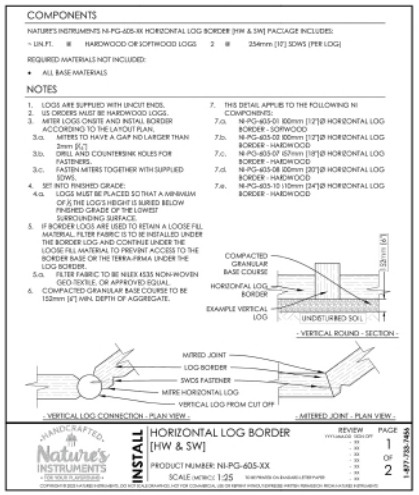

PLAN VIEW

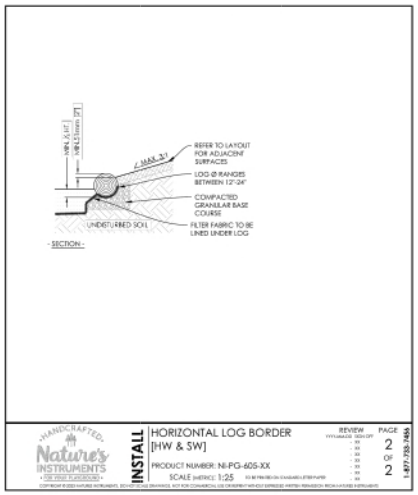

SECTION

INSTALL PER MANUFACTURERS SPECIFICATIONS AND REQUIREMENTS

PRODUCT INFO:	
PRODUCT NAME:	HORIZONTAL LOG BORDER
MANUFACTURER:	NATURES INSTRUMENTS OR APPROVED ALTERNATE
STYLES:	NATURAL LOG
LN.FT.	75 LN.FT. OR BORDER, THREE AREAS TOTAL
COLOR/FINISH:	NATURAL LOG, BARK ON

NOTE:
LANDSCAPE LOG BORDERS ARE NOT CONSIDERED SPECIFIC PLAY ELEMENTS.

1 HORIZONTAL LOG BORDER
NTS



STYLE IMAGE

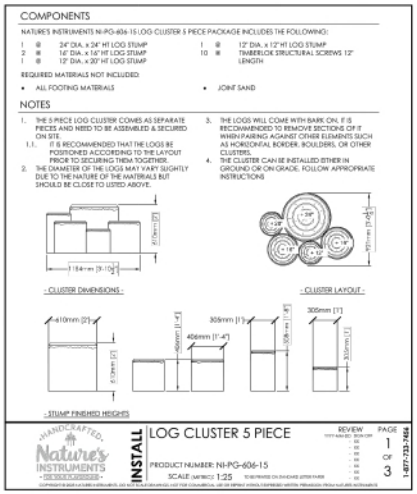

PLAN VIEW / SECTION

INSTALL PER MANUFACTURERS SPECIFICATIONS AND REQUIREMENTS

PRODUCT INFO:	
PRODUCT NAME:	LOG CLUSTER 5 PIECE
MANUFACTURER:	NATURES INSTRUMENTS OR APPROVED ALTERNATE
STYLES:	NATURAL LOG
QTY	2 AREAS
COLOR/FINISH:	NATURAL LOG, BARK ON

2 5 PIECE LOG CLUSTER
NTS

teska associates
627 Grove Street
Evanston, Illinois

DAYCARE INTERIOR RENOVATION
CRATE & BARREL
1250 TECHNY RD., NORTHBROOK , IL. 60062

LOG BORDER DETAILS

REVISIONS

NO	DESCRIPTION	DATE
	ISSUED FOR BID PERMIT	5/1/23

SIGNATURE

REGISTERED LANDSCAPE ARCHITECT
DANIEL JEFFREY O'BRIAN
LIC. NO. 15-000608
EXPIRES 11/30/2023
STATE OF ILLINOIS

DRAWN BY: DJO
APPROVED BY: DJO
DATE: 05/23.05
25010
SHEET NO: L-5.4

PLAY FEATURES AND EQUIPMENT AS SHOWN ARE "BASIS OF DESIGN" ALL EQUIPMENT AND FEATURES TO BE CONFIRMED WITH OWNER AND ARE SUBJECT TO CHANGE.



STYLE IMAGE



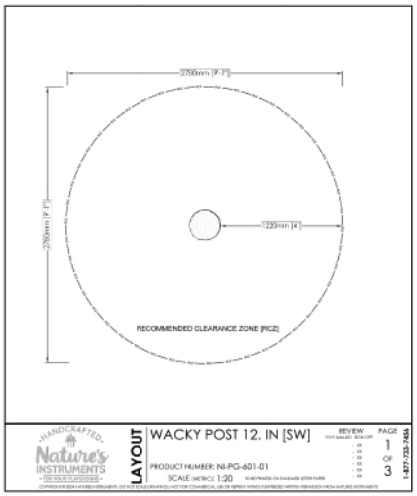

PLAN VIEW

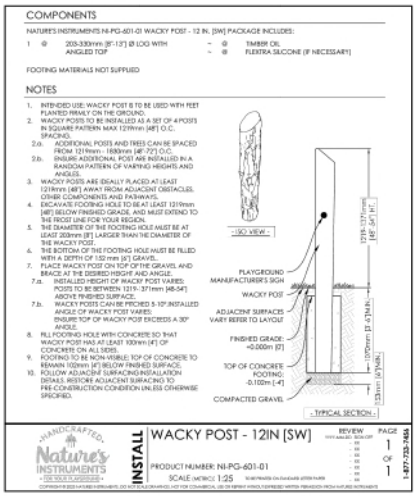

SECTION

INSTALL PER MANUFACTURERS SPECIFICATIONS AND REQUIREMENTS

PRODUCT INFO:	
PRODUCT NAME:	WACKY POST
MANUFACTURER:	NATURES INSTRUMENTS
STYLES:	NATURAL LOG
QTY	4
COLOR/FINISH:	BARK OFF

1 WACKY POSTS

NTS



STYLE IMAGE

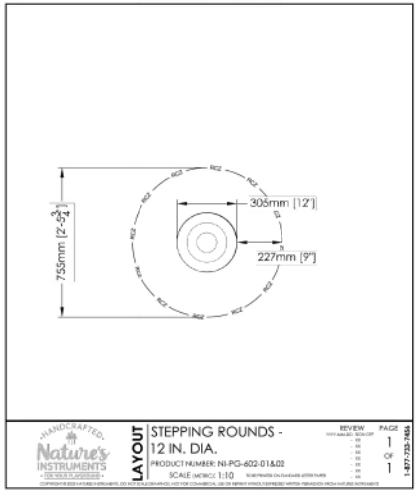

PLAN VIEW

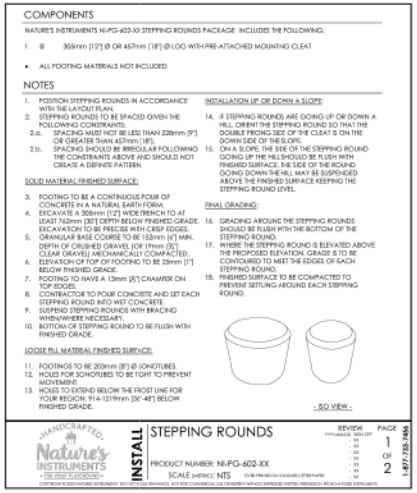

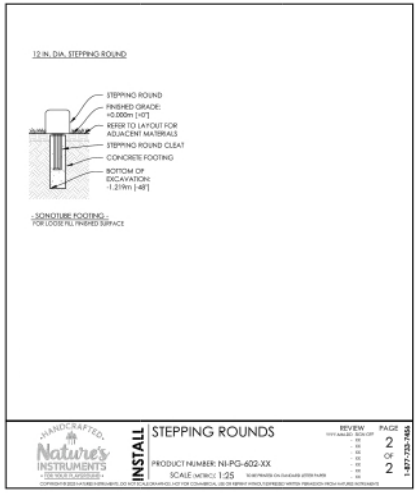

SECTION

INSTALL PER MANUFACTURERS SPECIFICATIONS AND REQUIREMENTS

PRODUCT INFO:	
PRODUCT NAME:	LOG STEPPING ROUNDS 12"X12"
MANUFACTURER:	NATURES INSTRUMENTS
STYLES:	NATURAL LOG
QTY	8 TOTAL
COLOR/FINISH:	BARK OFF

2 LOG STEPPING ROUNDS

NTS

teska associates
627 Grove Street
Evanston, Illinois

DAYCARE INTERIOR RENOVATION
CRATE & BARREL
1250 TECHNY RD., NORTHBROOK , IL. 60062

LOG CLIMBER DETAILS

REVISIONS

NO	DESCRIPTION	DATE
	ISSUED FOR BID/PERMIT	5/10/23

SIGNATURE

REGISTERED LANDSCAPE ARCHITECT
DANIEL JEFFREY O'BRIAN
LIC. NO. 157-001308
EXPIRES 11/30/24
STATE OF ILLINOIS

DRAWN BY	APPROVED BY
DJO	DJO
DATE	
25010	05/23/23

SHEET NO

L-5.5

PLAY FEATURES AND EQUIPMENT AS SHOWN ARE "BASIS OF DESIGN" ALL EQUIPMENT AND FEATURES TO BE CONFIRMED WITH OWNER AND ARE SUBJECT TO CHANGE.



STYLE IMAGE

9 PIECE OBSTACLE COURSE- PUBLIC EXTENDED

1 NTS

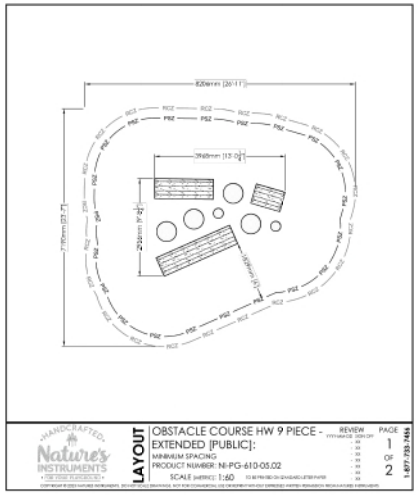

PLAN VIEW

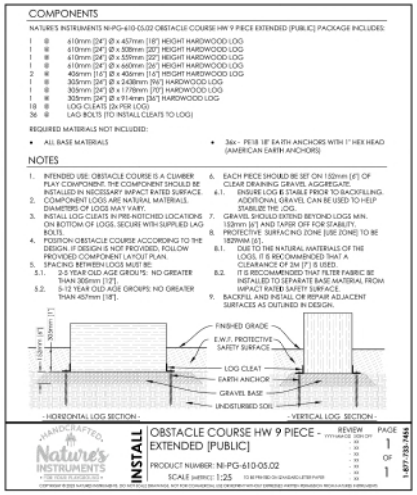

SECTION

PRODUCT INFO:	
PRODUCT NAME:	9 PIECE OBSTACLE COURSE- PUBLIC EXTENDED
MANUFACTURER:	NATURES INSTRUMENTS
STYLES:	NATURAL LOG
QTY	1 UNIT OF 9
COLOR/FINISH:	BARK OFF

teska associates
627 Grove Street
Evanston, Illinois

DAYCARE INTERIOR RENOVATION
CRATE & BARREL
1250 TECHNY RD., NORTHBROOK , IL. 60062

LOG OBSTACLE COURSE DETAILS

REVISIONS		
NO.	DESCRIPTION	DATE
	ISSUED FOR BID PERMIT	6/1/25

SIGNATURE

REGISTERED LANDSCAPE ARCHITECT
DANIEL JEFFREY O'BRIAN
LIC. NO. 15-000809
EXPIRES 11/30/2026
DATE 06/01/25
STATE OF ILLINOIS

DRAWN BY:	APPROVED BY:
DJO	DJO
DATE:	
25010	05/23/25

SHEET NO.

L-5.6

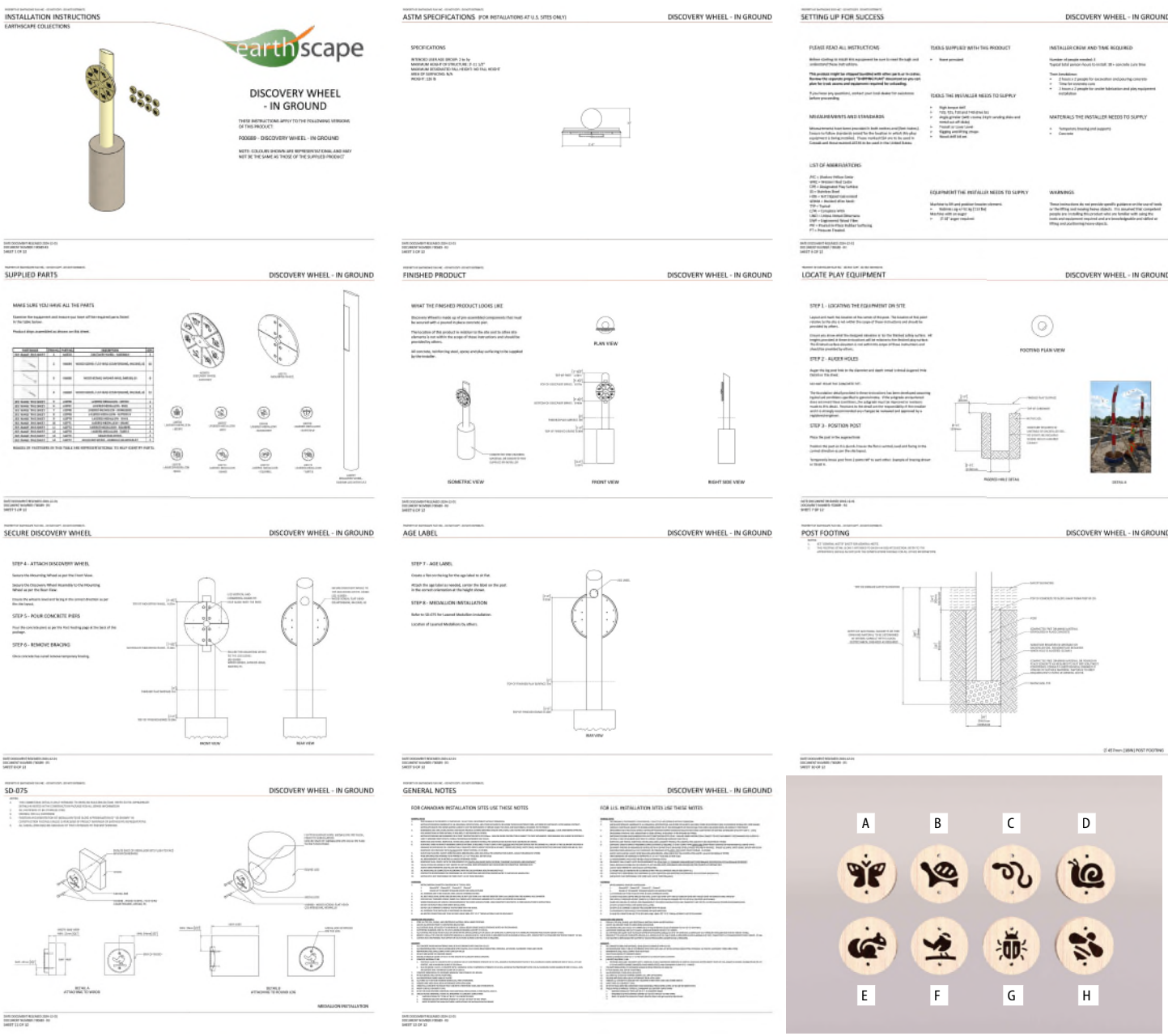

PLAY FEATURES AND EQUIPMENT AS SHOWN ARE "BASIS OF DESIGN" ALL EQUIPMENT AND FEATURES TO BE CONFIRMED WITH OWNER AND ARE SUBJECT TO CHANGE.

INSTALL PER MANUFACTURERS SPECIFICATIONS AND REQUIREMENTS

PRODUCT INFO:	
PRODUCT NAME:	DISCOVERY WHEEL
MANUFACTURER:	EARTHSCAPE
SIZE	SEE DETAIL
QTY	1 DISCOVERY WHEEL AND POST, 8 ANIMAL MEDALLIONS MOUNTED ON POST ALONG JOURNEY WALKING PATH

MEDALLION POSTS:

- MEDALLIONS MOUNTED ON 4" DIA ROUND BLACK LOCUST POST (DEBARKED NATURAL FINISH) TO MATCH DISCOVER WHEEL POST
- 4' HT ABOVE FINISHED GRADE
- CENTER OF MEDALLION 30" ABOVE FINISHED GRADE
- MATCH TOP EDGE BEVEL OF DISCOVER WHEEL
- POST SET IN CONCRETE BASE TO FROST FREE ZONE
- MEDALLIONS TO BE MOUNTED ON POST WITH WOOD SCREWS, PARALLEL TO JOURNEY WALKING PATH FOR VISIBILITY
- 8 LOCATIONS TOTAL SEE L-2.11 FOR LOCATION
- SUPPLIER EARTHSCAPE

LAYOUT SEE PLAN L-2.1B

DISCOVERY WHEEL

DISCOVERY MEDALIONS, MOUNTED ON ROUND BLACK LOCUST POSTS, SEE PLAN FOR LOCATION.

1 DISCOVERY WHEEL AND DISCOVERY MEDALLIONS/POST DETAILS

NTS

teska associates
627 Grove Street
Evanston, Illinois

DAYCARE INTERIOR RENOVATION
CRATE & BARREL
1250 TECHNY RD., NORTHBROOK , IL. 60062

DISCOVERY WHEEL DETAILS

REVISIONS

NO	DESCRIPTION	DATE
	ISSUED FOR BID PERMIT	9/30/2

SIGNATURE

REGISTERED LANDSCAPE ARCHITECT
DANIEL JEFFREY O'BRIAN
LIC. NO. 156-001468
EXPIRES 11/30/2023
STATE OF ILLINOIS

DRAWN BY DJO
APPROVED BY DJO
DATE 09/23/2021
25010
SHEET NO L-5.7

PLAY FEATURES AND EQUIPMENT AS SHOWN ARE "BASIS OF DESIGN" ALL EQUIPMENT AND FEATURES TO BE CONFIRMED WITH OWNER AND ARE SUBJECT TO CHANGE.

PROPERTY OF EARTHSCAPE PLAY INC. - DO NOT COPY. DO NOT DISTRIBUTE.

FINISHED PRODUCT — ALPINE HUT

WHAT THE FINISHED PRODUCT LOOKS LIKE

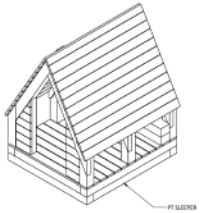

ISOMETRIC VIEW

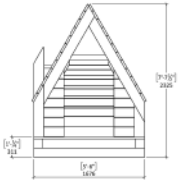

FRONT VIEW

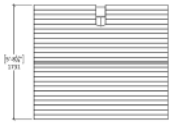

PLAN VIEW

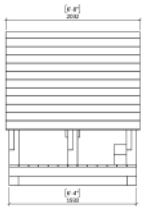

RIGHT SIDE VIEW

DATE DOCUMENT RELEASED 2021-03-16
DOCUMENT NUMBER: 1048998 - R2
SHEET 7 OF 10

PROPERTY OF EARTHSCAPE PLAY INC. - DO NOT COPY. DO NOT DISTRIBUTE.

SECURING HUT — ALPINE HUT

STEP 3 - SECURING HUT

Drill 1/2" holes at an angle through PT Sleepers into subgrade in 4 locations as specified in Figure 3.

Drive 1500mm (59") pieces of rebar, through the holed drilled in the PT Sleepers, into the subgrade to prevent the hut from moving. Figure 4

STEP 4 - BACKFILL

Backfill and compact around hut to make level with surrounding surface, keep the future finished grade in mind. (Figure 4)

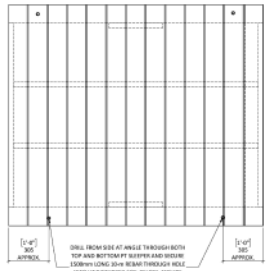

FIGURE 3

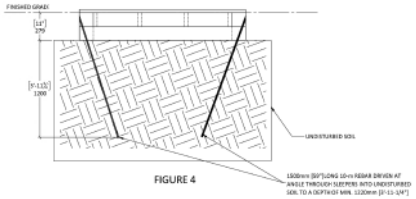

FIGURE 4

DATE DOCUMENT RELEASED 2021-03-16
DOCUMENT NUMBER: 1048998 - R2
SHEET 9 OF 10

earthscape

ALPINE PLAY HUT
Intended user age: 2-5

PRODUCT INFORMATION — **ASTM F1487**

The tall peaked roof of the Alpine Hut is a clean and modern design that could fit into a range of playground themes and styles. A-Frame in style, the small house is finished with a chimney. It is fully enclosed on one side but open at the bottom on two sides providing visibility for caregivers but giving children a sense of privacy.



Maximum height: 6'-8"
Fall height: N/A
Area of Safety Surfacing: N/A

The highest designated play surface and space required are according to ASTM F1487.

Resilient safety surfacing is required within the fall zone of equipment.

If you have questions about the equipment or require changes, please contact Earthscape at 1-877-269-2972.

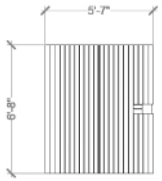

GENERAL NOTES — ALPINE HUT

INSTALL PER MANUFACTURERS SPECIFICATIONS AND REQUIREMENTS

PRODUCT INFO:	
PRODUCT NAME:	ALPINE PLAY HUT
MANUFACTURER:	EARTHSCAPE
SIZE	SEE DETAIL
STAIN COLOR	CONTRACTOR SHALL PROVIDE SAMPLES FOR OWNER REVIEW AND SELECTION
WOOD FINISH	NATURAL AND STAIN
QTY	1

FOR U.S. INSTALLATION SITES USE THESE NOTES



DATE DOCUMENT RELEASED 2021-03-16
DOCUMENT NUMBER: 1048998 - R2
SHEET 10 OF 10

1 ALPINE PLAY HUT
NTS

teska associates
627 Grove Street
Evanston, Illinois

DAYCARE INTERIOR RENOVATION
CRATE & BARREL
1250 TECHNY RD., NORTHBROOK , IL. 60062

ALPINE HUT DETAILS

REVISIONS		
NO.	DESCRIPTION	DATE
	ISSUED FOR BD. PERMIT	9/1/25

SIGNATURE

REGISTERED LANDSCAPE ARCHITECT
DANIEL JEFFREY O'BRIAN
LIC. NO. 156-001808
EXPIRES 11/30/2026
STATE OF ILLINOIS

DRAWN BY:	APPROVED BY:
DJO	DJO
	DATE:
25010	05/23/25

SHEET NO.
L-5.8

PLAY FEATURES AND EQUIPMENT AS SHOWN ARE "BASIS OF DESIGN" ALL EQUIPMENT AND FEATURES TO BE CONFIRMED WITH OWNER AND ARE SUBJECT TO CHANGE.

PROPERTY OF EARTHSCAPE PLAY INC. - DO NOT COPY. DO NOT DISTRIBUTE.

FINISHED PRODUCT

JUNIOR FORMS - PINES - SMALL

WHAT THE FINISHED PRODUCT LOOKS LIKE

The Junior Form - Pines - Small comes pre-assembled. The installed needs to provide the concrete foundation pad as detailed in these instructions.

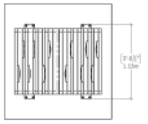

PLAN VIEW

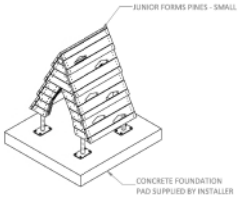

ISOMETRIC VIEW

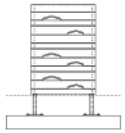

FRONT VIEW

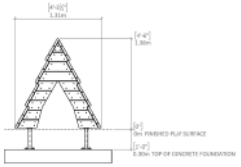

RIGHT SIDE VIEW

DATE DOCUMENT RELEASED 2023-06-26
DOCUMENT NUMBER: 1072826 - R3
SHEET 6 OF 9

LOCATE AND POUR FOUNDATION

JUNIOR FORMS - PINES - SMALL

STEP 1 - LOCATING THE EQUIPMENT ON SITE

Layout and mark the location of the 2 equipment Reference Points on your site. The location of these points relative to the site is not within the scope of these instructions and should be provided by others.

Ensure you know what the designed elevation is for the finished safety surface. All heights provided in these instructions will be relative to the finished play surface. The finished surface elevation is not within the scope of these instructions and should be provided by others.

STEP 2 - LAYOUT CONCRETE PAD

Layout and mark the outer edge of concrete pad based off the 2 Reference Points. Refer to Footing Plan View on this sheet for details

STEP 3 - EXCAVATE FOR CONCRETE PAD

Excavate area and prep as per Concrete Placement Detail SD-001E on this sheet.

The foundation detail provided in these instructions has been developed assuming typical soil conditions specified in general notes. If the subgrade encountered does not meet these conditions, the subgrade must be improved or revisions made to this detail. Revisions to the detail are the responsibility of the installer and it is strongly recommended any changes be reviewed and approved by a registered engineer.

STEP 4 - POUR CONCRETE PAD

Pour concrete pad as per Concrete Placement Detail SD-001E on this sheet. Ensure top of concrete is 305mm [12"] below finished play surface.

Allow concrete to cure prior to proceeding to Step 5.

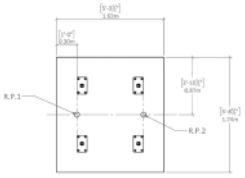

FOOTING PLAN VIEW

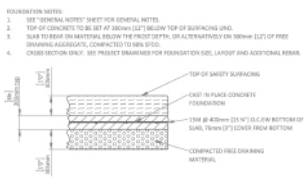

CONCRETE FOUNDATION DETAIL SD-001E

DATE DOCUMENT RELEASED 2023-06-26
DOCUMENT NUMBER: 1072826 - R3
SHEET 7 OF 9

SECURE EQUIPMENT TO FOUNDATION

JUNIOR FORMS - PINES - SMALL

STEP 5 - POSITION JUNIOR FORM

Align the Junior Form sculpture base brackets with the 2 reference points as shown in the Plan View this sheet.

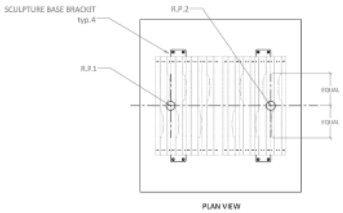

PLAN VIEW

STEP 6 - SECURE JUNIOR FORM TO CONCRETE PAD

Secure the Junior Form sculpture base brackets to the concrete pad as per Detail B this sheet. Pre-drill for all anchor screws as per manufacturer's instructions.

Repeat for all 4 sculpture base brackets.

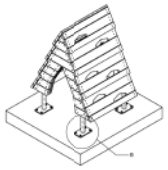

ISOMETRIC VIEW

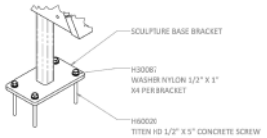

DETAIL B

DATE DOCUMENT RELEASED 2023-06-26
DOCUMENT NUMBER: 1072826 - R3
SHEET 8 OF 9

GENERAL NOTES

JUNIOR FORMS - PINES - SMALL

INSTALL PER MANUFACTURERS SPECIFICATIONS AND REQUIREMENTS

PRODUCT INFO:	
PRODUCT NAME:	PINE SMALL
MANUFACTURER:	EARTHSCAPE
SIZE	SEE DETAIL
STAIN COLOR	CONTRACTOR SHALL PROVIDE SAMPLES FOR OWNER REVIEW AND SELECTION
WOOD FINISH	NATURAL AND STAIN
QTY	1

FOR U.S. INSTALLATION SITES USE THESE NOTES



DATE DOCUMENT RELEASED 2023-06-26
DOCUMENT NUMBER: 1072826 - R3
SHEET 9 OF 9

1 PINE SMALL
NTS

teska associates
627 Grove Street
Evanston, Illinois

DAYCARE INTERIOR RENOVATION
CRATE & BARREL
1250 TECHNY RD., NORTHBROOK , IL. 60062

PINE SMALL DETAILS

REVISIONS

NO.	DESCRIPTION	DATE
	ISSUED FOR SD PERMIT	9/1/25

SIGNATURE

REGISTERED LANDSCAPE ARCHITECT
DANIEL JEFFREY O'BRIAN
LIC. NO. 157-001806
EXPIRES 11/30/2026
04/08/25
STATE OF ILLINOIS

DRAWN BY:	APPROVED BY:
DJO	DJO
25010	DATE: 05/23/25

SHEET NO.
L-5.9



BUILDING AREA (USABLE SQUARE FOOTAGE)

DESCRIPTION	EXISTING				PROPOSED
	BLDG A.	BLDG B.	BLDG C.	TOTALS	
LOWER LEVEL	21,353 S.F.	-	-	21,353 S.F.	NO CHANGE
ENTRY LEVEL	43,212 S.F.	22,260 S.F.	3,306 S.F.	68,958 S.F.	
UPPER LEVEL	42,239 S.F.	21,379 S.F.	4,528 S.F.	68,146 S.F.	
PENTHOUSE LEVEL	-	8,227 S.F.	-	8,227 S.F.	
EXISTING FLOOR TOTAL	106,805 S.F.	51,866 S.F.	8,522 S.F.	167,320 S.F.	
NOTE: EXISTING TOTALS BASED ON ORIGINAL BUILDING DRAWING/DOCUMENTATION DATED 9/27/1995 PROVIDED BY CRATE & BARREL.	TOTAL FLOOR AREA:			167,320 S.F.	NO CHANGE
	OFFICE USE:			145,890 S.F.	137,848 S.F.
	ACCESSORY STOR/MECH. USE:			23,406 S.F.	29,406 S.F.
	DAY CARE USE:			N/A	4,050 S.F.

PARKING CALCULATIONS

BASED ON ZONING CODE TABLE 9-104 F & 9-105D
REFER TO SITE PLAN FOR DAY CARE PARKING SPACE ALLOCATIONS

	DESCRIPTION	ZONING REQUIREMENTS (FOR PROPOSED USE)	EXISTING	PROPOSED
CRATE & BARREL CORPORATE OFFICES	PER SQ. FT. REQUIREMENT	1 PER 250 SQ. FT. **NET*** FLOOR AREA = 582 REQUIRED SPACES	637 SPACES	611 SPACES (REALLOCATED BELOW)
	ACCESSIBLE SPACES (PER IBC 2018)	2% OF TOTAL (500-1000 SPACES) = 13 REQUIRED ACCESSIBLE SPACES	13 SPACES	13 SPACES (EXISTING - NO CHANGE)
	LOADING BERTHS	1 PER FIRST 150,000 SQ. FT.	4 LOADING BERTHS	4 LOADING BERTHS (EXISTING - NO CHANGE)
	OFFICE TOTAL	**582 TOTAL SPACES (13 HC) 2 LOADING BERTHS**	**637 TOTAL SPACES (13 HC) 4 LOADING BERTHS**	**611 SPACES (13 HC) 4 LOADING BERTHS**
CHILD DAY CARE SERVICES	PER EMPLOYEE REQ.	1 PER EMPLOYEE = 15 PARKING SPACES	N/A	15 SPACES (REALLOCATED EXISTING)
	PER CHILD REQ.	1 PER 10 CHILDREN (62 CHILDREN ARAY) = 7 REQUIRED SPACES	N/A	7 SPACES (REALLOCATED EXISTING)
	ACCESSIBLE SPACES (PER IBC 2018)	1 SPACE (1 TO 25 SPACES)	N/A	1 SPACE (REALLOCATED EXISTING)
	LOADING BERTHS	N/A	N/A	N/A
	CHILD DAY CARE TOTAL	**22 SPACES (1 HC)**	**N/A**	**22 SPACES (1 HC)**
	TOTAL SURFACE PARKING:	**674 TOTAL SPACES (14 HC) 2 LOADING BERTH**	**637 TOTAL SPACES (13 HC) 4 LOADING BERTHS**	**630 SPACES (14 HC) 4 LOADING BERTHS**

NOTE: ACCESSIBLE SPACES ARE COUNTED IN THE REQUIRED TOTAL, NOT IN ADDITION TO PER IBC 2018

* TOTAL CALCULATED FLOOR AREA FOR REQUIRED PARKING IS CALCULATED AS NET PER NORTHBROOK ZONING CODE AND HAS EXCLUDED THE ACCESSORY STORAGE AND MECHANICAL SPACES FROM THE CALCULATION THAT DO NOT CREATE DEMAND FOR PARKING. TOTAL OFFICE NUMBER USED IS 137,848 S.F. AS SHOWN IN SQUARE FOOTAGE TABLE ABOVE.

- CORRIDORS, STAIRS, SHAFTS, RESTROOMS HAVE NOT BEEN EXCLUDED BUT COULD BE TO FURTHER REDUCE THE REQUIRED PARKING AS THESE AREAS ALSO DO NOT CREATE A DEMAND FOR PARKING IN NET CALCULATIONS AS DEFINED BY BOMA.

- CALCULATIONS AS SHOWN COMPLY WITH ZONING REQUIREMENTS WITHOUT REMOVING AND RECALCULATING WITH THESE SPACES EXCLUDED.

MEMORANDUM

To: Plan Commission
From: Deputy Director of Development and Planning Services Michaela Kohlstedt
Date: 2025-09-30
Subject: DOCKET NO. PCD-25-12: 820 DUNDEE ROAD - NORTHBROOK FIRE STATION (*Public Hearing*). An application filed by Village of Northbrook as owner of the property commonly known as 820 Dundee Road, for development of a new fire station for the purposes of: (A) Comprehensive Plan Map Amendment from Multi-Family 6-9 DUA to Government Facility; (B) Rezoning from R-2 Single-Family Residential District to IB Institutional Building District; (C) Special Permit to Allow one wall sign in excess of District Height Limitation (SIC No. 9966.00) in IB District; (D) Variation to reduce the required lot width from 300' to 167.54' in IB District; (E) Variation to reduce the required yard (west) from 20' to 0'; (F) Variation to reduce the required yard (east) from 40' to 20'; (G) Variation to reduce the required special building setback (east) for non-dwelling use abutting residential use from 40' to 20'; (H) Variation to reduce the required number of loading spaces from 1 to 0; (I) Site Plan Approval; and (J) Approval of any such variations, waivers, and zoning relief as may be necessary.

Overview
The Village of Northbrook proposes to construct a new fire station on the Subject Property.

Fiscal Impact
N/A.

Recommendation
Conduct a public hearing and consider a draft Resolution recommending approval.

Background
See attachments.

820 Dundee - Staff Report 9-30-25
820 Dundee - Sustainability Addendum
820 Dundee - Draft Plan Commission Resolution
820 Dundee - Application Summary, Aerials
820 Dundee - BOT Minutes - 6-10-25
820 Dundee - Excerpt Comprehensive Plan
820 Dundee - Zoning Map Exhibits
820 Dundee - Formal Application

820 Dundee - Narrative & Plans

MEMORANDUM

To: Plan Commission
From: Senior Planner Swati Pandey
CC: Deputy Director Michaela Kohlstedt
Date: September 30, 2025
Subject: PCD-25-12: 820 Dundee Road – Village of Northbrook Fire Station

INTRODUCTION

On September 30, 2025 the Plan Commission will conduct a public hearing on an application filed by Village of Northbrook (the "Applicant") as owner of the property commonly known as 820 Dundee Road (the "Subject Property"). The applicant proposes to construct a new fire station on the Subject Property. The following zoning relief is requested:

a) Comprehensive Plan Map Amendment from Multi-Family 6-9 DUA to Government Facility;

b) Rezoning from R-2 Single-Family Residential District to IB Institutional Building District;

c) Special Permit to Allow one wall sign in excess of District Height Limitation (SIC No. 9966.00) in IB District;

d) Variation to reduce the required lot width from 300' to 167.54' in IB District;

e) Variation to reduce the required yard (west) from 20' to 0';

f) Variation to reduce the required yard (east) from 40' to 20';

g) Variation to reduce the required special building setback (east) for non-dwelling use abutting residential use from 40' to 20';

h) Variation to reduce the required number of loading spaces from 1 to 0;

i) Site Plan Approval; and

j) Approval of any such variations, waivers, and zoning relief as may be necessary to accomplish development and use of the Subject Property as requested by the Applicant.

A sign has been posted on the Subject Property indicating the time and date of the Plan Commission public hearing. The Applicant has submitted evidence that the mailed notice requirements of the Zoning Code have been satisfied. The Plan Commission hearing was properly noticed in the August 28, 2025 edition of the *Northbrook Star* for a public hearing to occur on September 16, 2025; however, due to a lack of a quorum that meeting was canceled and the item continued to the September 30, 2025 special Plan Commission meeting. Staff has received one general inquiry but no written public comments on the application.

PROPERTY DESCRIPTION

The Subject Property is noted as being:

- located on the north side of Dundee Road, west of Ballantrae Drive;
- approximately 87,117 square feet (2.0 acres approx..) in size
- improved with a single-family home (3,000 square feet) which is currently vacant;
- zoned R-2 Single Family Residential District;
- designated as appropriate for Multi-Family 6-9 DUA in the Comprehensive Plan's Future Land Use;

- surrounded by properties with land uses as depicted on the attached Application Summary;
- not located within the 100-year flood plain; and
- not located in proximity to any areas identified in the Master Stormwater Management Plan.
- The Village's Bicycle and Pedestrian Plan designates Dundee Road in front of the subject property appropriate for a Sidepath (located adjacent to the roadway).

BACKGROUND INFORMATION

The property was developed with a single-family home, which has since been demolished. The Village has purchased the property to construct a new fire station.

Preliminary Review

On June 10, 2025, the Board of Trustees conducted a preliminary review of the request for a fire station for the Village. The Board found the use to be appropriate. An excerpt of the Board of Trustees minutes is attached for reference, and the meeting, and Board of Trustees commentary can be viewed on the Village website here.

The following is a table of the comments made by members of the Board of Trustees on the preliminary review application and concept site plan:

Trustee	Title	Status	Comments
Kathryn Ciesla	Village President	Present	In-favor of the use
Robert Israel	Trustee	Present	In-favor of the use
Heather Ross	Trustee	Present	In-favor of the use
Johannah Hebl	Trustee	Present	In-favor of the use
Joy Ebhomielen	Trustee	Present	In-favor of the use
Michelle Kohler	Trustee	Present	In-favor of the use
Matt Cassidy	Trustee	Present	In-favor of the use

Staff Review

Prior to scheduling a public hearing the application underwent the standard review process and was reviewed by the following departments/entities:

- Development and Planning Services (Planning & Zoning)
- Sustainability
- Public Works Department (Engineering and Tree Preservation)
- Fire
- Police

Staff reviewed the application and found it to be in general compliance with the requirements. All departments have approved the application to proceed for a public hearing. Any comments pending are to be reviewed at the time of site work and building permit submittal.

Compliance with Village Plans

- The Comprehensive Plan identifies the property for Multi-family 6-9 DUA uses. The Applicant is requesting to amend the Future Land Use map to change the designation to 'Government Facility'. This designation is intended "to provide areas to accommodate existing and future government buildings".
- The Village's Bicycle and Pedestrian Plan designates Dundee Road in front of the subject property appropriate for a Sidepath (located adjacent to the roadway).

PROPOSED PROJECT

- The Village has purchased the property and demolished the single-family home for construction a new fire station. A Fire Protection (SIC No. 9224.00) facility is a permitted use in the IB district. The applicant is requesting to amend the comprehensive plan and rezone the property to IB Institutional Building district to allow the new fire station facility. Details regarding the proposed request are outlined in the attached material submitted by the Applicant.
- The fire station building is proposed in the center of the site. There will be two driveways accessing the site – the driveway along the west property line would be for regular vehicles accessing the rear parking lot and the main driveway would lead up to the building to access the apparatus bay for the fire response vehicles. A 20-space parking lot for employees will be located to the rear/north of the building and three spaces are proposed to the west of the building for visitor parking. There will be a covered patio located near the northwest corner of the building, while a mechanical area will be located on the north side of the building, which includes a transformer and generator, screened by a five-foot tall privacy fence. Stormwater detention system will be underground, primarily in the south and southwest portion of the site under the driveway. A site plan showing the layout is attached.
- The facility would be staffed by eleven full-time employees.
- The facility will be in operation 24 hours a day/seven days a week.
- Parking: The proposed site plan shows 23 parking spaces would be provided on-site. The parking requirement for a fire station would be four spaces (1 per 3 persons of design capacity). Therefore, parking will be in compliance with the requirements of the Zoning Code.
- An eight-foot tall trash enclosure is shown at the northwest corner of the site. The enclosure consists a CMU block wall with face brick, matching the primary building, and a Trex gate.
- A landscape plan has been provided by the Applicant. The plan shows landscaping proposed on almost all available pervious areas of the site, primarily along north and east side of the building.
- An eight-foot tall ‘welded wire steel’ fence will be installed along the rear and interior side property line, except for the required front yard in IB District. The location of the proposed fence is depicted on the proposed site plan.
- Signage: A total of four wall signs are proposed on two facades of the building, one of which requires a special permit to exceed the 20-feet sign height from grade in IB District. All signs are in compliance with the sign size requirement. The wall signs show the logo and lettering for the Fire Department. A ground sign will be installed along Dundee Road, as shown on the site plan in compliance with the height and setback requirements. A sign permit will be required prior to installation of these signs, upon approval of the special permit for one wall sign exceeding 20 feet in height from grade.

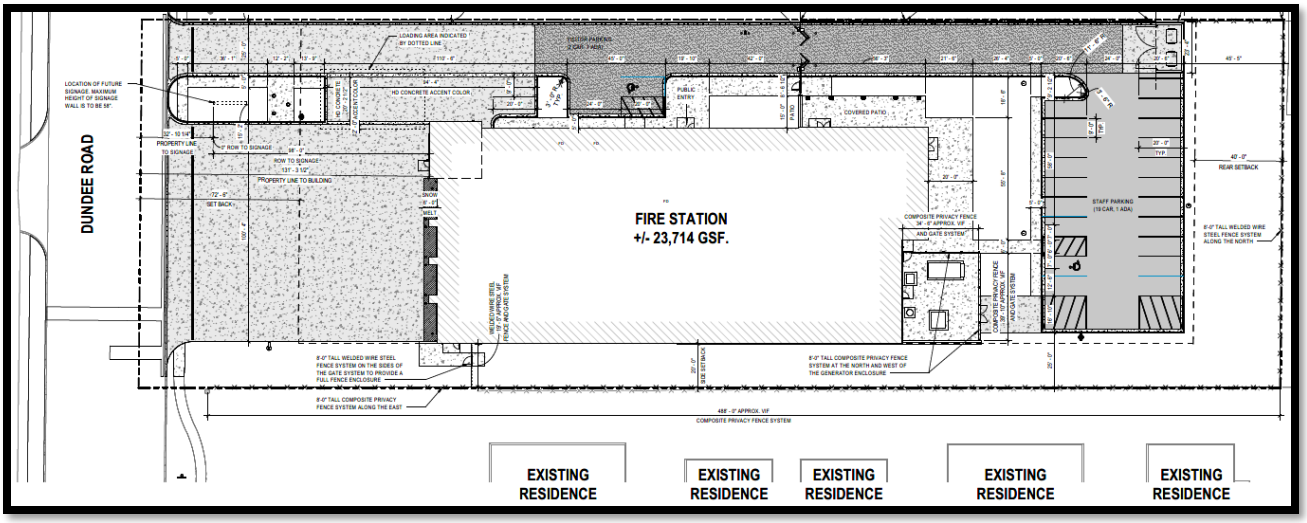

Figure 1: Proposed Site Plan

SUSTAINABILITY

Following the adoption of the Climate Action Plan (CAP), it is important to reference action items found in the CAP as they relate to development proposals. The Village's Sustainability Coordinator has drafted a Sustainability Addendum attached to this report, which goes into further detail on CAP items that are relevant to the Subject Property and the proposed plan.

ZONING RELIEF

The application was filed prior to the adoption of the new Zoning Code on September 9, 2025, and therefore, this application has been reviewed and is seeking relief per the requirements of the Northbrook Zoning Code adopted in 1988 as amended.

Comprehensive Plan Amendment

The Applicant is requesting to amend the Comprehensive Plan Future Land Use Map to change the land use classification for the Subject Property from Multi-Family Residential 6-9 Dwelling Units Per Acre to Government Facility. The Comprehensive Plan currently designates the Subject Property as appropriate for multi-family residential uses.

An excerpt of the Comprehensive Plan is attached to this report noting the purpose, principal land uses, and applicable zoning district for Government Facility designation. This land use category is intended for existing and future government buildings, administrative offices, maintenance facilities and activities of the Village, Park District, County, State, and Federal government. Government Facility properties can be located anywhere throughout the Village.

The Plan Commission will want to consider whether or not it is appropriate to amend the Comprehensive Plan to designate the Subject Property as appropriate for Government Facility Uses. There are several locations within the Village of Northbrook that are mapped as an Institutional Building and/or Government Facility as shown on the GIS map exhibits attached.

Rezoning

If the Plan Commission finds it appropriate to amend the Comprehensive Plan to designate the Subject Property as appropriate for Government Facility uses, the Applicant will also need approval of a rezoning from the R-2 Single Family Residential District to the IB Institutional Building District. The adjacent property to the north and west is zoned OS Open Space District; to the east is Ballantrae multi-family subdivision. However, to the east of Ballantrae subdivision is the existing Fire Station in the IB district. The Zoning Code states that the IB Institutional Building District is intended to accommodate existing and future public buildings and buildings having purposes and impacts similar to public buildings.

Special Permit

The Village Zoning Code (1988) specifies that the top of a wall sign cannot be more than 20 feet from grade on a building in IB District but allows for wall signs to be constructed at greater heights if granted special permit approval (SIC 9966.00). The Applicant is requesting special permit approval. Under the newly adopted Zoning Code (2025), this special permit would not be required since a wall sign that does not "*extend above the tallest point of the façade*" is allowed.

The Plan Commission and Board of Trustees must consider the general standards for special permit established in Paragraph 11-602 E1 of the Zoning Code when deciding whether to grant the requested special permit. These standards include the following:

1) Is the proposal in compliance with the Zoning Code and Official Comprehensive Plan?
2) Will there be any adverse impact upon adjacent properties?
3) Will the proposed use interfere with the orderly development of adjacent properties?
4) Are there adequate public facilities to serve the development?
5) Will the use cause undue traffic congestion?
6) Will the development cause loss of significant environmental or historical features?
7) Will the use comply with other applicable Village standards?

Several of the above criteria are of particular importance in considering whether or not a special permit should be granted for the proposed signs, specifically standards 2 & 3. The Applicant has included a statement of justification with their application addressing the above points.

In reviewing a special permit request to allow a wall sign in excess of the sign height limitation the two major issues for the Commission to consider are:

(1) the general placement of the signs on the wall face and

(2) the visual impact the higher signs may have on adjacent uses, particularly residential uses.

The proposed wall signs are located on the south (facing Dundee Road) and west (Open Space) façade. There are no signs proposed facing residential use. There is only one sign (along Dundee Road) which requires a special permit. All other signs are in compliance with the requirements of the Zoning Code.

Variations

In addition to the above noted relief, the Applicant has also requested the following variations. The bulk and space variation requests listed below would remain the same under the new Zoning Code as well.

- *Lot Width*: to reduce the required lot width from 300 feet to 167.54 feet; given that it is an existing lot and cannot be expanded further;
- *Yard*: to reduce the required interior side (east) from 20' to 0" to accommodate a parking lot; and interior side (west) from 40' to 20'; to accommodate the proposed parking lot and drive aisles;
- *Setback*: to reduce the required special building setback (east) from 40' to 20'; given the narrow shape of the lot, the variation is requested to accommodate the building and drive aisle;
- *Loading Space*: In addition to the above noted relief, the proposed site plan requires a variation to reduce the required number of loading space from 1 to 0. The Applicant has stated that given the nature of the use, the facility does not require a 10'x25' loading space; and the layout of the proposed facility does not accommodate a loading space of this size. In order to add a loading space, it would require eliminating required parking spaces.

SUMMARY

In reviewing this request, staff suggests the Plan Commission consider the following policy questions:

a) Is a fire station an appropriate use at the property?

b) Is it appropriate to amend the comprehensive plan map from Multi-Family 6-9 DUA to Government Facility?

c) Is it appropriate to rezone the property from R-2 Single Family Residential to IB Institutional Building District?

d) Is it appropriate to grant a special permit for a wall sign above 20 feet in height above grade in IB District? If yes, any limitations?

e) Is it appropriate to grant the following variations:

   i) Variation to reduce the required lot width from 300' to 167.54' in IB District;

   ii) Variation to reduce the required yard (west) from 20' to 0';

   iii) Variation to reduce the required yard (east) from 40' to 20';

   iv) Variation to reduce the required special building setback (east) for non-dwelling use abutting residential use from 40' to 20';

   v) Variation to reduce the required number of loading spaces from 1 to 0.

Staff has prepared the attached draft resolution for consideration by the Commission. If the Commission should choose to amend and/or take action on this resolution, it would be **Resolution No. 25-PC-18.**

The Applicant and staff will attend the September 30, 2025 Plan Commission meeting to answer any questions.

MEMORANDUM

To: Plan Commission
From: Kate Carney, Sustainability Coordinator
cc: Amy McEwan, DPS Director
Date: September 30, 2025
Subject: PCD-25-12: 820 Dundee – New Fire Station – Sustainability Addendum to Staff Report

Northbrook's Climate Action Plan (CAP) calls to foster sustainability and reduce 80% of community-wide carbon emissions by 2050 through strategic planning and action item implementation. With CAP adoption, development proposals are reviewed with respect to best environmental practices.

This property is owned by the Village of Northbrook. Several of the items outlined below were the subject of prior discussion by the Board of Trustees at both the Committee of the Whole and Board of Trustees meetings held on April 22, 2025. Items that were part of these discussion are marked with an asterisk (*). These prior discussions offered guidance on several key design elements.

Of the items presented to the Applicant 80% were fully realized according to CAP standards, to the extent detailed below in italics.

Transportation and Land Use
In the Transportation and Land Use section of the CAP, recommendations are made to enhance active mobility and fossil fuel-free transit:

TL 5-2 Consider including wiring capacity to charge electric vehicles.

Applicant response: The Village has designed the facility so that it can support EV charging and is reviewing options for standardized stations to be used at this facility but also other Village facilities.

Buildings and Energy
The Building Energy section of the CAP provides the following items pertaining to reducing our community-wide carbon footprint and preserving wildlife:

BE 1- 1 Use this Village facility to showcase clean energy systems and promote the technical and financial information needed to support broader scale adoption. Conduct a renewable energy potentials assessment for facility.*

Applicant response: The design of the building will meet the goals established by the Board of Trustees at both the Committee of the Whole and Board of Trustees meetings held on April 22, 2025.

BE 2- 1 Consider conducting a Solar PV Site Assessment. Assessment should include estimated installation cost, and projections for both energy generation potential and economic payback potential over a minimum 20-year timeframe. If installation will not be realized, confirm reserved space for solar-ready roof zone and plan for structural design loads and electrical service to allow for future installation of a dual pole circuit breaker if possible.*

Applicant response: The design of the building will meet the goals established by the Board of Trustees at both the Committee of the Whole and Board of Trustees meetings held on April 22, 2025. The facility has been designed to be solar ready and future installations will be possible if the geothermal system needs to be supplemented to meet our goals.

BE 5- 1 Explore opportunities for the property to utilize smart lights that can save energy through conservation. Achieve 100% LED installation if possible.

Applicant response: The facility has been designed so that all the lights will be LED and be managed for energy conservation.

BE 5- 4 Require purchase and installation of ENERGY STAR appliances when available.

Applicant response: The Village will attempt to use ENERGY STAR appliance whenever possible.

BE 7- 2 Consider the benefits of replacing fossil fuel burning heating equipment and with air-source heat-pumps, or other efficient electric heating options in development. Strive for zero on-site fossil fuel combustion with air-source heat-pumps, geo-thermal systems, solar thermal, electric cooktops, etc.*

Applicant response: The design of the building will meet the goals established by the Board of Trustees at both the Committee of the Whole and Board of Trustees meetings held on April 22, 2025, and included a geothermal well system, be an all-electric building.

Waste Management
The CAP points to procedures that may facilitate waste reduction (with a goal of at least 50% landfill wasted diverted by 2030) in its Waste Management section:

WM 2- 5 Assure compliance with the Cook County Construction & Demolition Debris Diversion Ordinance, and encourage contractors and subcontractors to exceed minimum requirements, where demolition occurs.

Applicant response: This will be coordinated during demolition.

WM 2- 7 Consider offering recycling and compost collection services.

Applicant response: The facility has been designed to include both recycling and composting receptacles.

Water and Wastewater
In the Water and Wastewater category, the CAP states to prioritize mitigating stormwater before it enters the sewer system through multiple capture techniques:

WW 1- 2 Reduce landscaping water use with water-efficient irrigation systems, grass replacement, and planting native and drought-resistant trees and vegetation in landscaping plans.

Applicant response: The landscaping plan will emphasize the use of native plantings and drought-resistant trees and vegetation. There will be no irrigation system.

WW 1- 3 Evaluate the potential for installation of rainwater collection systems at Village facilities for graywater uses, and investigate opportunities for graywater reuse at existing and new Village facilities and properties.

Applicant response: These items were not incorporated into the plan.

WW 1- 4 Consider utilizing water conservation programs that focus on outdoor irrigation, which may also support better identification of water-related carbon sequestering opportunities such as using soil amendments, native grasses and proper tree watering.

Applicant response: The landscaping plan will emphasize the use of native plantings and drought-resistant trees and vegetation. There will be no irrigation system.

WW 2- 1 Prioritize managing stormwater before it enters the sewer system through a combination of overland flow, detention, and infiltration strategies (for example, permeable surfaces) where feasible.*

Applicant response: The design of the building will meet the goals established by the Board of Trustees at both the Committee of the Whole and Board of Trustees meetings held on April 22, 2025.

WW 3- 3 Reduce or offset impervious surfaces where possible and consider use of lighter colored pavements and building materials to lessen the impact of urban heat island effect.

Applicant response: This will be taken under advisement.

Greenspace and Ecosystem Health
The Plan's Greenspace category includes the following for expansion of tree canopy coverage, transforming beneficial lawns, and mitigation of heat island impacts:

GS 2- 5 Consider including exterior lighting design to protect native plants, species, biodiversity, and improve night sky quality.

Applicant response: This will be taken under advisement.

GS 1- 12 Plan for diversity of native tree cover and performance-based tree island within landscaping plan and parking lots with goals on percentage of pavement shaded. Consider a mix of canopy trees, shrubs, groundcovers, and raingarden components appropriate to the lot and its surroundings in any new landscaping where possible.

Applicant response: The landscaping plan will emphasize take this goal into consideration.

DRAFT

RESOLUTION NO. 25-PC-__

VILLAGE OF NORTHBROOK PLAN COMMISSION
DOCKET NO. PCD-25-12
(820 DUNDEE ROAD)

WHEREAS, an application has been filed by Village of Northbrook (the "Applicant") as owner of the property commonly known as 820 Dundee Road (the "Subject Property"), for development of a new Village fleet maintenance garage, and

WHEREAS, the Applicant has filed an application (Docket No. PCD-25-12) with the Village of Northbrook requesting:

a) Comprehensive Plan Map Amendment from Multi-Family 6-9 DUA to Government Facility;
b) Rezoning from R-2 Single-Family Residential District to IB Institutional Building District;
c) Special Permit to Allow one wall sign in excess of District Height Limitation (SIC No. 9966.00) in IB District;
d) Variation to reduce the required lot width from 300' to 167.54' in IB District;
e) Variation to reduce the required yard (west) from 20' to 0';
f) Variation to reduce the required yard (east) from 40' to 20';
g) Variation to reduce the required special building setback (east) for non-dwelling use abutting residential use from 40' to 20';
h) Variation to reduce the required number of loading spaces from 1 to 0;
i) Site Plan Approval; and
j) Approval of any such variations, waivers, and zoning relief as may be necessary to accomplish development and use of the Subject Property as requested by the Applicant.

WHEREAS, the Subject Property is designated as appropriate for Multi-Family 6-9 DUA uses in the Village of Northbrook Comprehensive Plan; and

WHEREAS, a public notice for this docket was duly published on August 28, 2025 in the *Northbrook Star* and a public hearing was scheduled for September 16, 2025, but due to a lack of quorum the meeting was continued and held at a special meeting of the Plan Commission on September 30, 2025; and

WHEREAS, the Applicant has submitted evidence that sign was properly posted on the Subject Property, indicating the time and date of the Commission hearing, and that all property owners within 250 feet of the Subject Property were notified of the Commission hearing by certified mail; and

WHEREAS, the Plan Commission has considered all the evidence presented to it, including, but not limited to, the following:

1. Village of Northbrook Plan Commission Application form & attachments received August 19, 2025, and all subsequent additions and revisions to these application materials and attachments.
2. Comments made by the Board of Trustees during its review of the preliminary application regarding this request.
3. All written and oral testimony concerning the application.

NOW, THEREFORE, BE IT RESOLVED by the Plan Commission of the Village of Northbrook, Cook County, Illinois, THAT:

1. Findings:

A. Comprehensive Plan Compliance. The Northbrook Plan Commission does hereby find that with respect to Docket No. PCD-25-12A, the Plan Commission hereby finds that the request to amend the Comprehensive Plan to change the designation of the Subject Property from Multi-Family 6-9 DUA to Government Facility **does comply** with the standards for approval of such requests as established in the Northbrook Zoning Code.

B. Zoning Map Amendment. With respect to Docket No. PCD-25-12B, the Plan Commission hereby finds that the Applicant's request to rezone the Subject Property from R-2 Single Family Residential District to IB Institutional Building District is consistent with the Northbrook Comprehensive Plan, as amended, and **does comply** with the standards for approval of such rezoning requests as established in Subsection 11-301 E(8) of the Northbrook Zoning Code.

C. Special Permit. With respect to Docket No. PCD-25-12C, the Plan Commission does hereby find that the Special Permit standards established in Paragraph 11-602 E1 of the Zoning Code, for the proposed wall sign exceeding the maximum sign height (SIC No. 9966.00) in the IB District, are satisfied as follows:

1) The Facility will be in harmony with the general and specific purposes for which this Code was enacted and for which the regulations of the IB Institutional Building District were adopted, and with the general purpose and intent of the Official Comprehensive Plan.
2) The Facility will not have a substantial or undue adverse effect upon adjacent property, the character of the area or the public health, safety and general welfare.
3) The Facility will be arranged and operated so as not to dominate the immediate vicinity or to interfere with the use and development of neighboring property.
4) The Facility will be served adequately by essential public facilities and services.
5) The Facility will not cause undue traffic congestion nor draw significant amounts of traffic through residential streets.
6) The Facility will not result in the destruction, loss or damage of natural, scenic or historic features of significant importance.
7) The Facility complies with all additional standards imposed on it by the particular provisions of the Zoning Code authorizing such use.

D. Variations. With respect to Docket No. PCD-25-12D/E/F/G, a request to reduce bulk and space requirements, the Plan Commission finds that the following variations **are consistent** with the standards for variations established in Subsection 11-503F of the Zoning Code:

i. Variation to reduce the required lot width from 300' to 167.54' in IB District;
ii. Variation to reduce the required yard (west) from 20' to 0';
iii. Variation to reduce the required yard (east) from 40' to 20';
iv. Variation to reduce the required special building setback (east) for non-dwelling use abutting residential use from 40' to 20'.

E. Loading Space Variation. With respect to Docket No. PCD-25-12H, the Plan Commission finds that a variation to reduce the required number of loading space from 1 to 0 is **consistent** with the standards for variations established in subsection 11-503F of the Zoning Code.

F. Site Plan Approval. With respect to Docket No. PCD-25-12I, the Plan Commission does hereby find that the proposed improvements on the Subject Property are **consistent** with the standards for such approvals as established in Section 11-604 of the Zoning Code.

G. Other Relief. With respect to Docket No. PCD-25-12J, the Plan Commission does hereby find that no other relief is necessary.

2. Recommendations: The Northbrook Plan Commission does hereby recommend to the Board of Trustees of the Village of Northbrook **approval** of Docket No. PCD-25-13A/B/C/D/E/F/G/H/I based on the findings established herein, subject to the following conditions:

A. Comprehensive Plan Amendment. The Future Land Use Classifications component of the Comprehensive Plan shall be amended to designate the Subject Property as appropriate for Government Facility.

B. Zoning Map Amendment. The Subject Property shall be rezoned to be located in the IB Institutional Building District and shall comply with all requirements of the IB District, except for any variations granted.

C. Special Permit. A special permit for a wall sign for a Fire Station to exceed the maximum sign height (SIC 9966.00) shall be issued to the Applicant for the Subject Property.

D. Variations. The below requested variations shall be granted:

i. Variation to reduce the required lot width from 300’ to 167.54’ in IB District;

ii. Variation to reduce the required yard (west) from 20’ to 0’;

iii. Variation to reduce the required yard (east) from 40’ to 20’;

iv. Variation to reduce the required special building setback (east) for non-dwelling use abutting residential use from 40’ to 20’;

v. Variation to reduce the required number of loading spaces from 1 to 0.

E. Site Plan Approval. The site plan consisting of one page, prepared by FGM Architects, with the plan dated June 27, 2025, attached as ***Exhibit A***, shall be approved.

ADOPTED THIS __ day of September 2025.

AYES: ()

NAYS: ()

ABSENT: ()

ABSTAIN: ()

_____
Steven Elisco, Chairman
Northbrook Plan Commission

ATTEST:

_____
Amy McEwan, Director
Development and Planning Services

EXHIBIT A

Site Plan

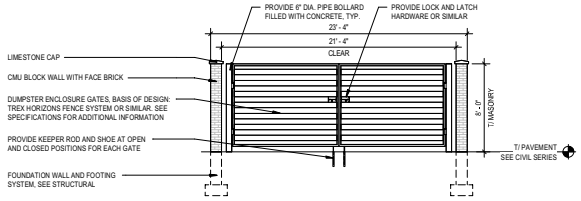

2 TRASH ENCLOSURE
3/16" = 1'-0"

GENERAL SITE PLAN NOTES

1. REFER TO G-SERIES SHEETS FOR TYPICAL ABBREVIATIONS, SYMBOLS & TAGS.
2. REFER TO CIVIL AND LANDSCAPE DRAWINGS FOR ADDITIONAL INFORMATION.
3. EXPOSED FERROUS METALS ARE TO BE PAINTED, U.N.O.
4. PROVIDE GALVANIC SEPARATION BETWEEN DIFFERENT METAL TYPES, TYP.
5. NOTE ANY DISCREPANCIES BETWEEN CIVIL AND ARCHITECTURAL DRAWINGS WITH REGARDS TO SCORING PATTERNS AND CONTROL JOINTS IN PAVING AND CONCRETE FLATWORK AND NOTIFY ARCHITECT PRIOR TO PROCEEDING.
6. COORDINATE SITE LIGHTING WITH ELECTRICAL DRAWINGS.
7. SEE LANDSCAPE DRAWINGS FOR TREE LOCATIONS.
8. FOR DETAILED CIVIL NOTES, REFER TO CIVIL DRAWINGS.

SITE PLAN LEGEND

- PROPERTY LINE
- EASEMENT
- SETBACK LINE
- RIGHT OF WAY LINE
- FENCE LINE
- INDICATES CONCRETE SIDEWALK. COORDINATE WITH THE CIVIL SCOPE OF WORK.
- INDICATES HEAVY DUTY CONCRETE PAVEMENT. COORDINATE WITH THE CIVIL SCOPE OF WORK.
- INDICATES HEAVY DUTY ASPHALT PAVEMENT. COORDINATE WITH THE CIVIL SCOPE OF WORK.
- INDICATES ASPHALT PAVEMENT. COORDINATE WITH THE CIVIL SCOPE OF WORK.
- INDICATES BUILDING FOOTPRINT
- INDICATES SNOW MELT SYSTEM. COORDINATE WITH THE CIVIL AND MECHANICAL SCOPE OF WORK.
- EXISTING UTILITY POLE
- FIRE HYDRANT. COORDINATE WITH THE CIVIL SCOPE OF WORK.
- SOLAR POWERED FLASHING BEACON. COORDINATE WITH THE CIVIL SCOPE OF WORK.

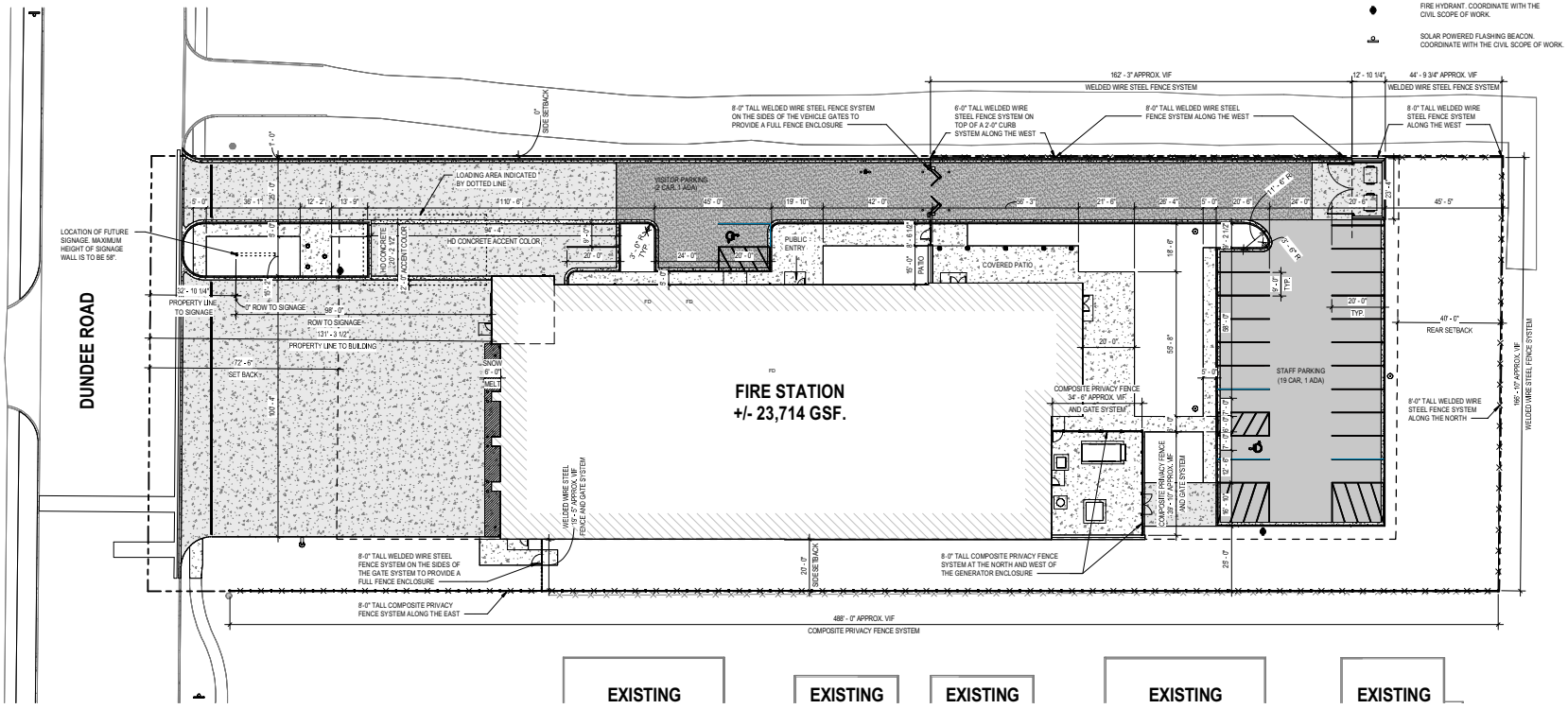

1 OVERALL SITE PLAN
3/64" = 1'-0"

fgma
FGMA ARCHITECTS
FGM Architects
1 Westbrook Corporate Center
Suite 1000
Westchester, Illinois 60154
630.574.8300 OFFICE
ILLINOIS PROFESSIONAL DESIGN FIRM #184.008390

CIVIL & LANDSCAPE
ERIKSSON ENGINEERING ASSOCIATES, LTD.
145 COMMERCE DRIVE, SUITE A
GRAYSLAKE, ILLINOIS, 60030
847.223.4804 (O)
IL STATE CERTIFICATE OF AUTHORITY

STRUCTURAL
McCLUSKEY ENGINEERING CORPORATION
1807 HIGH GROVE LANE
NAPERVILLE, ILLINOIS, 60540
630.717.5399 (O) 630.717.539791
IL STATE CERTIFICATE OF AUTHORITY

M.E.P.FP.
CONSOLIDATED CONSULTING ENGINEERS
224 SOUTH MILWAUKEE AVENUE, SUITE E
WHEELING, ILLINOIS, 60090
847.215.0600 (O)
IL STATE CERTIFICATE OF AUTHORITY

NOT FOR CONSTRUCTION

FOR REVIEW ONLY

Not for regulatory approval, permit or construction.

The information on this document is preliminary or incomplete, not for construction, recording purposes, or implementation.

ISSUANCE		
NO	DATE	DESCRIPTION
	06/27/2025	100% DESIGN DEVELOPMENT

NORTHBROOK FIRE STATION 11
VILLAGE OF NORTHBROOK
820 DUNDEE ROAD, NORTHBROOK, IL

ISSUED FOR PLAN COMMISSION - 08/22/2025

SITE PLAN

SHEET NO.
PC1.10

JOB NO. 25-4186.01

© 2025 FGM Architects

9/9/2025 11:54:33 AM
Autodesk Docs://Northbrook Fire Station 11/25-4186.01_Northbrook_Fire_Station_11_CD_2024.rvt
Copyright 2025 FGM ARCHITECTS

PCD-25-12: 820 DUNDEE ROAD
APPLICATION SUMMARY

Applicant:	Village of Northbrook
Site Location:	820 Dundee Road
Requested Action:	Comprehensive Plan Amendment from Multi-Family 6-9 DUA to Government Facility; Rezoning from R-2 Single-Family Residential District to IB Institutional Building District; Special Permit for one wall sign; Lot Width & Yard & Setback Variation; Loading Space Variation, and Site Plan Approval.
Proposal:	Village of Northbrook is requesting zoning approval to allow a fire station.
Existing Zoning & Land Use:	R-2 Single-Family Residential District; Vacant Single-Family Home
Surrounding Zoning & Land Use:	North: OS Open Space District; Green Acres South: OS Open Space District; Chipilly Woods East: R-8 Multi-Family Residential District; Ballantrae subdivision West: OS Open Space District; Green Acres
Comprehensive Plan Designation:	Multi-Family 6-9 DUA

ZONING MAP

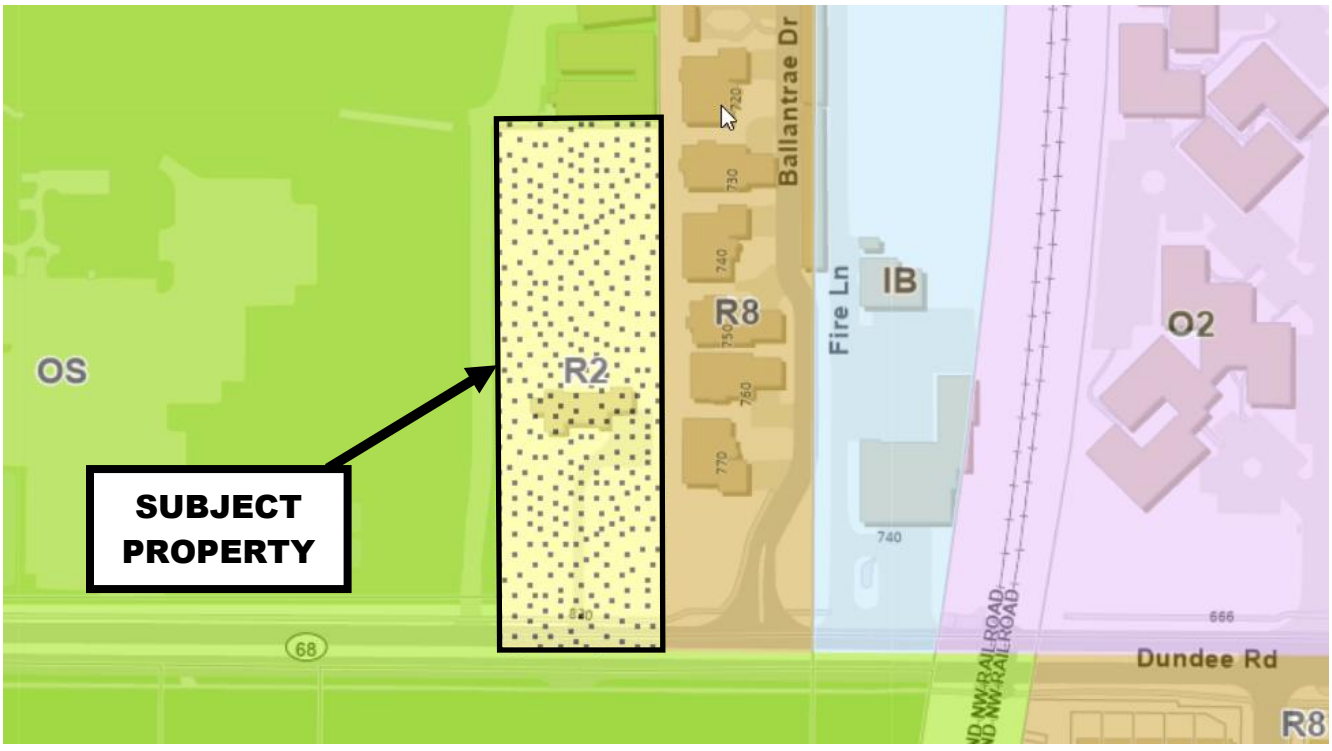

COMPREHENSIVE PLAN MAP

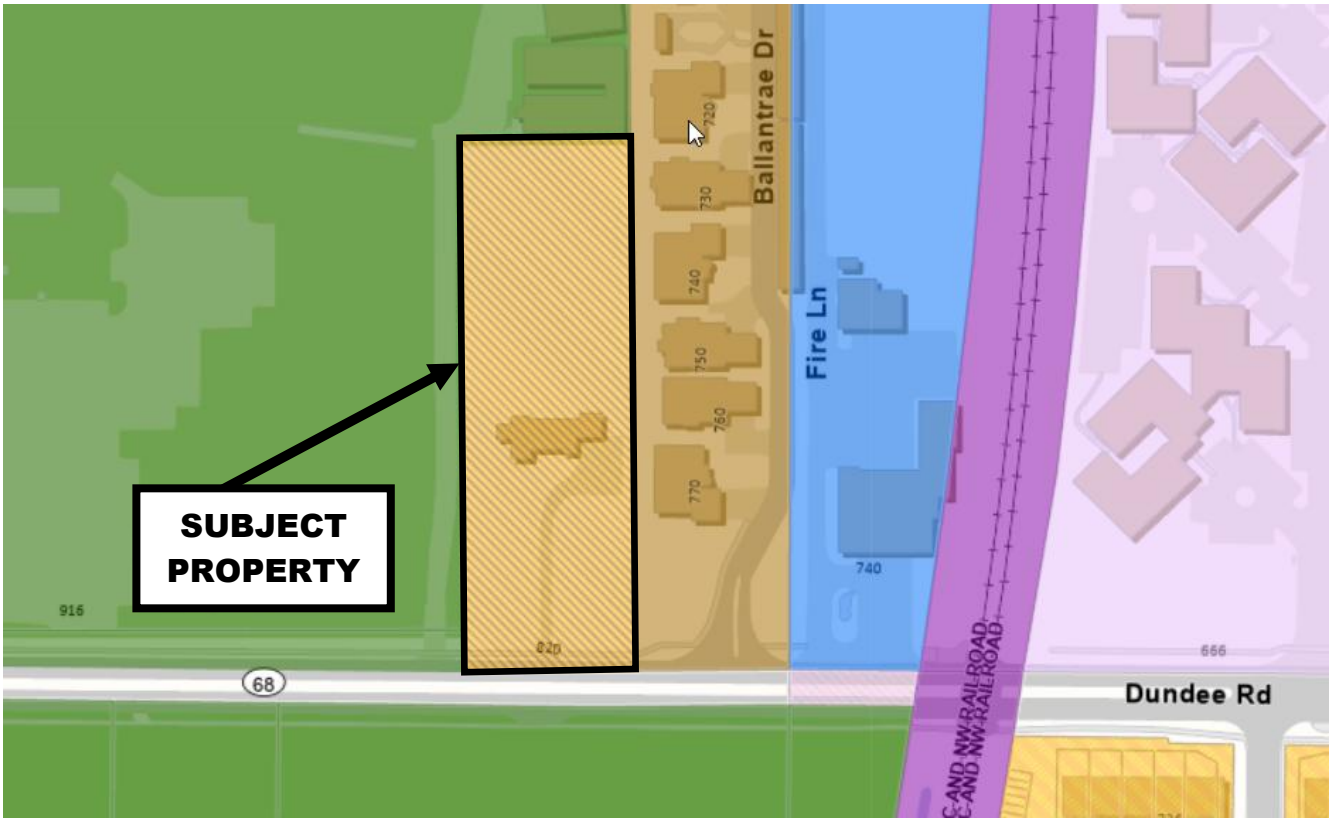

Legend

- Open Space & Outdoor Recreation
- Single Family
- Single Family Large Lot
- Multi-Family up to 6 DUA
- Multi-Family 6-9 DUA
- Multi-Family 9-15 DUA
- Multi-Family over 15 DUA
- Senior or Special Residential
- Government Facility
- Institutional Facility
- Neighborhood Office
- Neighborhood Edge 1
- Neighborhood Edge 2
- Office - Professional
- Office - Corporate/Corridor
- Community Retail
- Major Retail
- Industrial & Commercial Service
- General Industrial, Warehouse & Office
- Major Industrial/Distribution
- Transportation, Comm. & Utilities
- Village Center Mixed Use
- Techny Area Multi-Use
- Major Corridor Multi-Use
- Techny Area

GISConsortium | 820 Dundee Road



Legend

0 1000 2000 ft

Print Date: 5/27/2025

Notes

Disclaimer: The GIS Consortium and MGP Inc. are not liable for any use, misuse, modification or disclosure of any map provided under applicable law. This map is for general information purposes only. Although the information is believed to be generally accurate, errors may exist and the user should independently confirm for accuracy. The map does not constitute a regulatory determination and is not a base for engineering design. A Registered Land Surveyor should be consulted to determine precise location boundaries on the ground.

GISConsortium | 820 Dundee Road



Legend

0 300 600 ft

Print Date: 5/27/2025

Notes

Disclaimer: The GIS Consortium and MGP Inc. are not liable for any use, misuse, modification or disclosure of any map provided under applicable law. This map is for general information purposes only. Although the information is believed to be generally accurate, errors may exist and the user should independently confirm for accuracy. The map does not constitute a regulatory determination and is not a base for engineering design. A Registered Land Surveyor should be consulted to determine precise location boundaries on the ground.

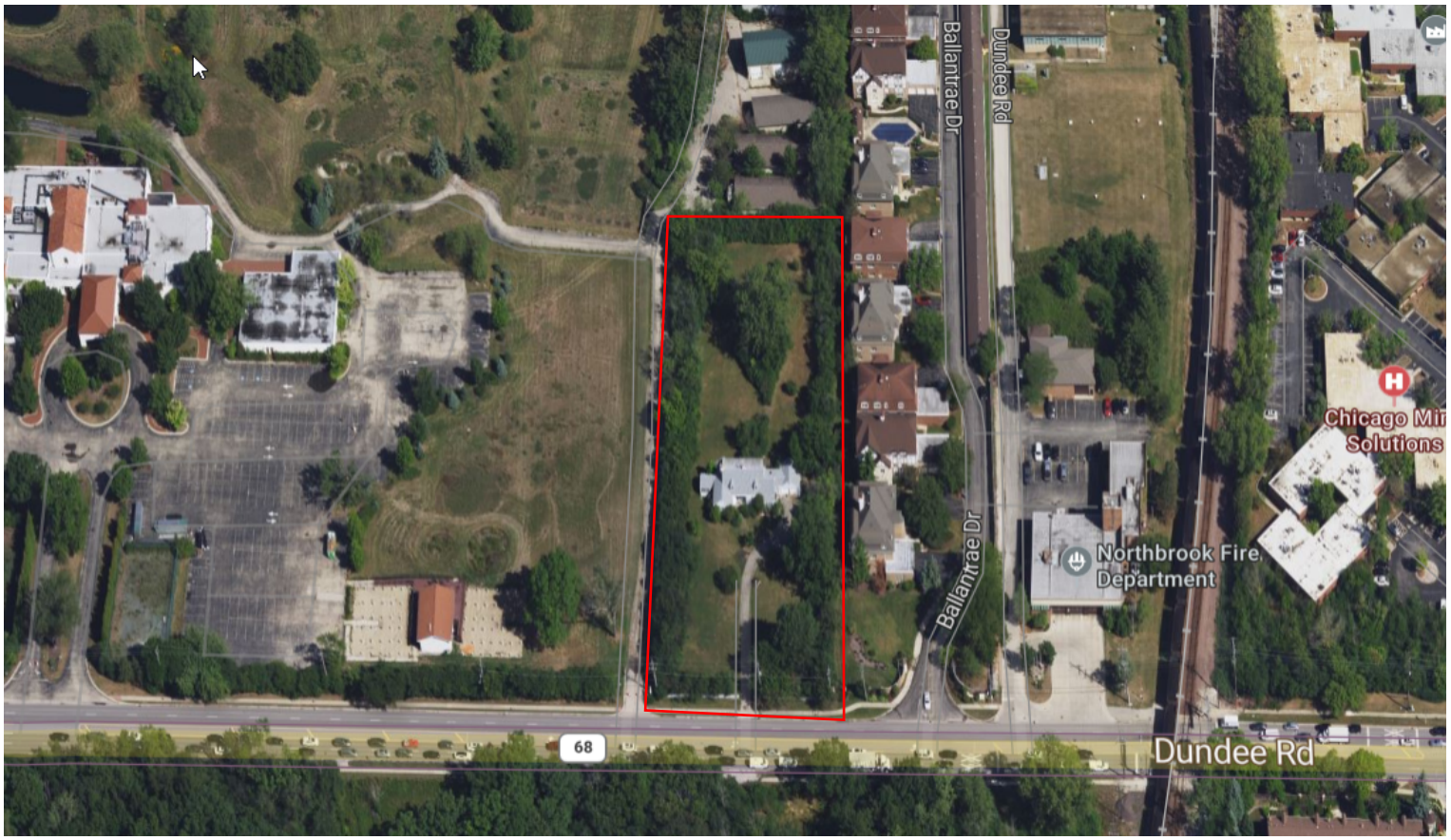
Ballantrae Dr
Dundee Rd
Ballantrae Dr
Northbrook Fire Department
Chicago Mir
Solutions
68
Dundee Rd

Village Board of Trustees Minutes

Sandra "Sandy" Frum Board Room
1225 Cedar Lane Northbrook, IL 60062
Tuesday, June 10, 2025

Village President Kathryn Ciesla called the meeting to order at 7:33 PM

1. **ROLL CALL**

Attendee Name	Title	Status
Kathryn Ciesla	Village President	Present
Robert Israel	Trustee	Present
Heather Ross	Trustee	Present
Johannah Hebl	Trustee	Absent
Joy Ebhomielen	Trustee	Present
Michelle Kohler	Trustee	Present
Matt Cassidy	Trustee	Present

2. **PLEDGE OF ALLEGIANCE**

3. **SWEARING-IN OF CAPTAIN BRAD PUTNEY, LIEUTENANT TED PETERS, AND FIREFIGHTER/PARAMEDIC JACOB FIOLKA**

4. **MINUTES APPROVAL**
   A. May 27, 2025 Regular Board Meeting Minutes for Approval

RESULT:	**APPROVED [5 – 0]**
MOVER:	Heather Ross, Trustee
SECONDER:	Robert Israel, Trustee
AYES:	Israel, Ross, Hebl, Ebhomielen, Kohler, Cassidy
NAYES:	None
ABSTAIN:	Kathryn Ciesla, President
ABSENT:	Johannah Hebl, Trustee

5. **PUBLIC COMMENT TIME**

David Hochberg asked whether a discussion has taken place between Village officials and Village attorneys regarding the public forum space. Also, he inquired about when public input will be scheduled and how the days are being counted when signs are displayed in the public forum space.

6. **MANAGER'S REPORT**

Village Manager Pavlicek highlighted significant Cook County Road Improvement Projects.

Public Works has replaced nearly 25% of water meters village wide.

Thanked the Sustainability Commission for their Climate Action Day event.

B. Preliminary Review of a Zoning Request by the Village of Northbrook for the development of a Village fleet garage at 3504 Commercial Avenue

RESULT:	**MOTION TO REFER TO PLAN COMMISSION [5 – 0]**
MOVER:	Robert Israel, Trustee
SECONDER:	Joy Ebhomielen, Trustee
AYES:	Israel, Ross, Ebhomielen, Kohler, Cassidy
NAYES:	None
ABSTAIN:	Kathryn Ciesla, President
ABSENT:	Johannah Hebl, Trustee

Amy McEwan, Director of Development & Planning Services, discussed an application submitted by Village of Northbrook for the property located at 3504 Commercial Avenue. The applicant is requesting a comprehensive plan map amendment and zoning relief to rezone the property from I-1 Restricted to IB Institutional Building. She provided a brief overview of the following: property's history, zoning, and proposed plan.

She noted the requested relief/primary issues the Village Board should consider.

Trustees Israel, Ross, Ebhomielen, Kohler, and Cassidy were in favor of the comprehensive plan map amendment and rezoning.

C. Preliminary Review of a Zoning Request by the Village of Northbrook for the development of a fire station at 820 Dundee Road

RESULT:	**MOTION TO REFER TO PLAN COMMISSION [5 – 0]**
MOVER:	Michelle Kohler, Trustee
SECONDER:	Heather Ross, Trustee
AYES:	Israel, Ross, Ebhomielen, Kohler, Cassidy
NAYES:	None
ABSTAIN:	Kathryn Ciesla, President
ABSENT:	Johannah Hebl, Trustee

Amy McEwan, Director of Development & Planning Services, discussed an application submitted by Village of Northbrook for the property located at 3504 Commercial Avenue. The applicant is requesting a comprehensive plan map amendment and zoning relief to rezone the property from R-2 Single Family Residential to IB Institutional Building. She provided a brief overview of the following: property's history, zoning, and proposed plan.

She noted the requested relief/primary issues the Village Board should consider.

Trustees Israel, Ross, Ebhomielen, Kohler, and Cassidy were in favor of the comprehensive plan map amendment and rezoning.

12. **COMMUNITY AND SUSTAINABILITY** – None

13. **HOUSING** – None

14. **PUBLIC WORKS AND FACILITIES** – None

15. **PUBLIC SAFETY** – None

16. **COMMUNICATIONS AND OUTREACH** – None

GOVERNMENT FACILITY (GF)
Purpose: The Government Facility (GF) classification is intended to provide areas to accommodate existing and future government buildings.
Principal Land Uses: The primary land uses in the GF classification will be administrative offices, maintenance facilities, and office, storage and maintenance activities for the Village, Park District, County, State, and Federal government. Subordinate uses in this area may include open space activities so long as such uses support the governmental uses in the area.
Location Standards: GF areas are located in a number of areas throughout the Village.
Applicable Zoning District(s): IB Institutional Building District

INSTITUTIONAL FACILITY (IF)
Purpose: The Institutional Facility (IF) classification is intended to provide areas to accommodate existing and future educational facilities, religious and other membership facilities, cultural facilities, and in-patient health care facilities.
Principal Land Uses: The primary land uses in the IF classification will be educational facilities, religious and other membership facilities, cultural facilities, and in-patient health care facilities. Subordinate uses in this area may include open space activities so long as such uses support the institutional uses in the area.
Location Standards: IF areas are located in a number of areas throughout the Village.
Applicable Zoning District(s): IB Institutional Building District
Comments: Given that IF areas are generally located in close proximity to residential uses, special design considerations should be made so that the IF areas will be compatible with the nearby residential uses.

The remainder of this page is intentionally blank

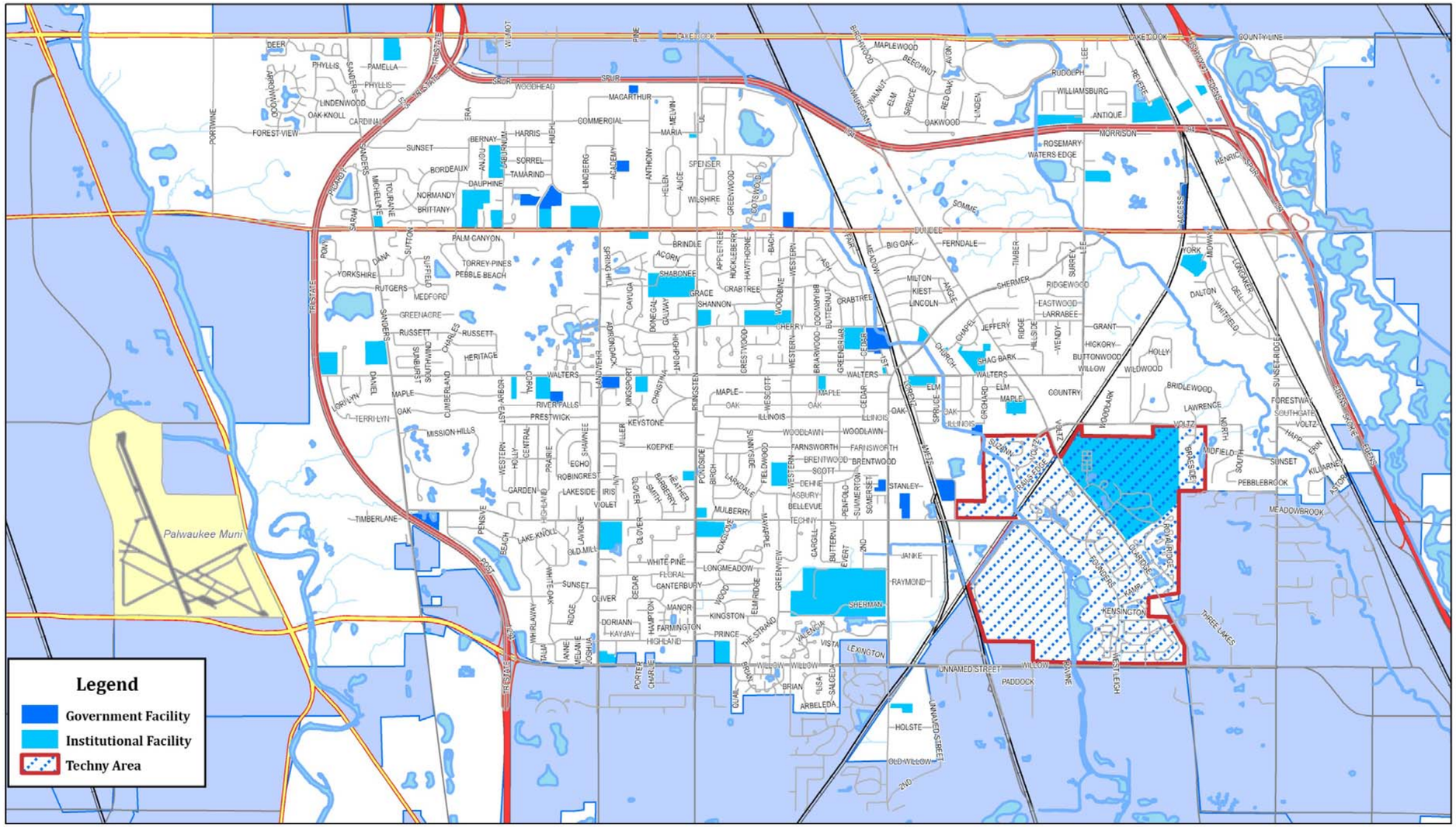

N
W E
S

Village of Northbrook
Development & Planning Services

2,000 1,000 0 2,000 4,000 6,000 Feet

Northbrook Comprehensive Plan
Future Land Use Map
Government & Institutional Areas

For 12-14-10
Board of Trustees
Meeting

GISConsortium

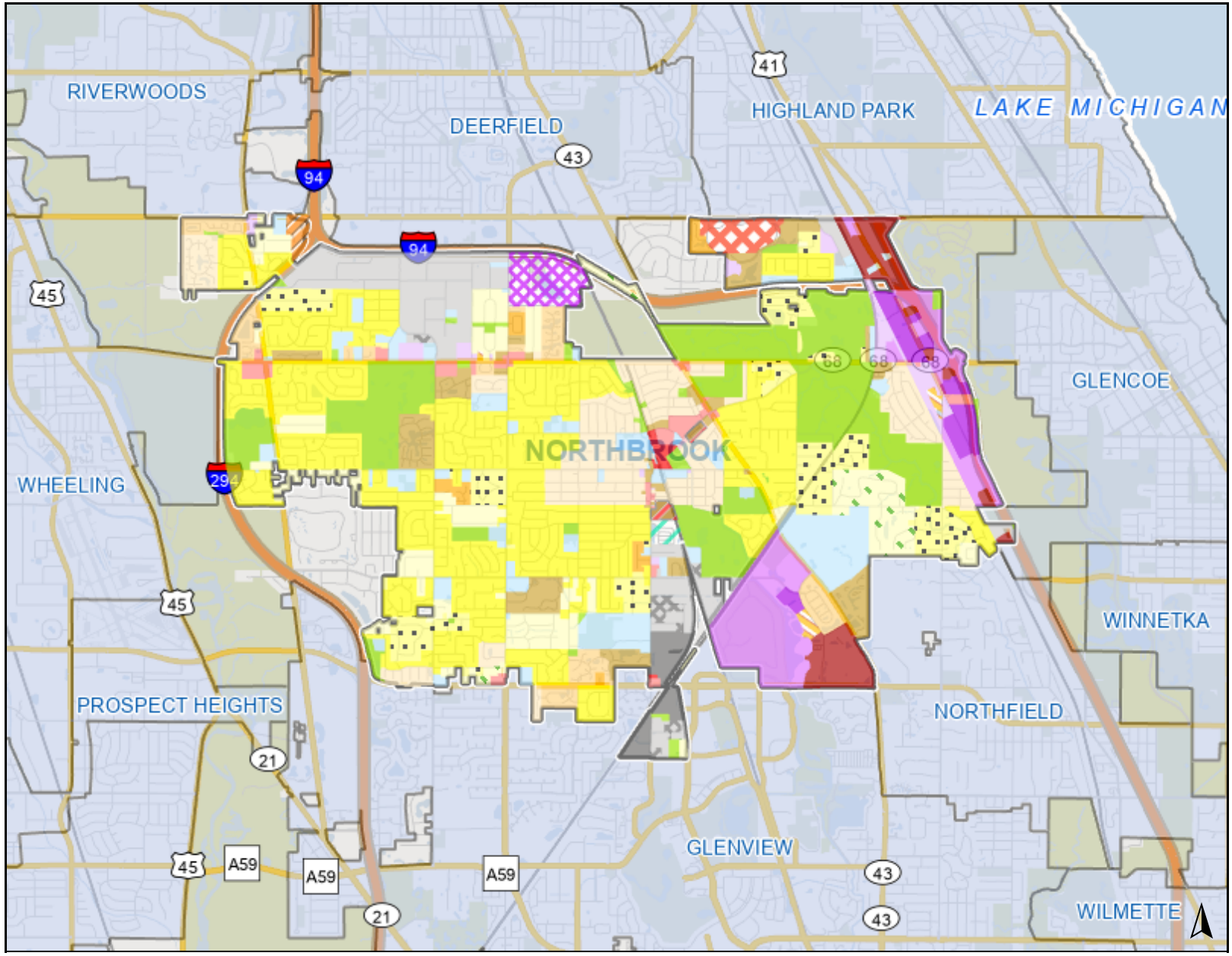

Legend

Zoning and Development

Zoning

- R1: Single Family Residential Districts
- R2: Single Family Residential Districts
- R3: Single Family Residential Districts
- R4: Single Family Residential Districts
- R5: Single Family Residential Districts
- R6: Multi-Family Residential Districts
- R7: Multi-Family Residential Districts
- R8: Multi-Family Residential Districts
- RS: Residential Specialty
- C1: Specialty Commercial District
- C2: Neighborhood Commercial District
- C3: Central Business District
- C4: Regional Shopping District
- C5: Boulevard Commercial District
- O1: Campus Office District
- O2: Limited Office District
- O3: General Office District
- O4: Boulevard Office District
- ICS: Industrial and Commercial Services District
- I1: Restricted Industrial District
- I2: Light Industrial District

0 2 4 mi

Print Date: 9/22/2025

Notes

Disclaimer: The GIS Consortium and MGP Inc. are not liable for any use, misuse, modification or disclosure of any map provided under applicable law. This map is for general information purposes only. Although the information is believed to be generally accurate, errors may exist and the user should independently confirm for accuracy. The map does not constitute a regulatory determination and is not a base for engineering design. A Registered Land Surveyor should be consulted to determine precise location boundaries on the ground.

INSTITUTIONAL BUILDING DISTRICTS

northbrook

Legend

- IB: Institutional Building District
- Municipal Boundary
- Other Municipal Boundary

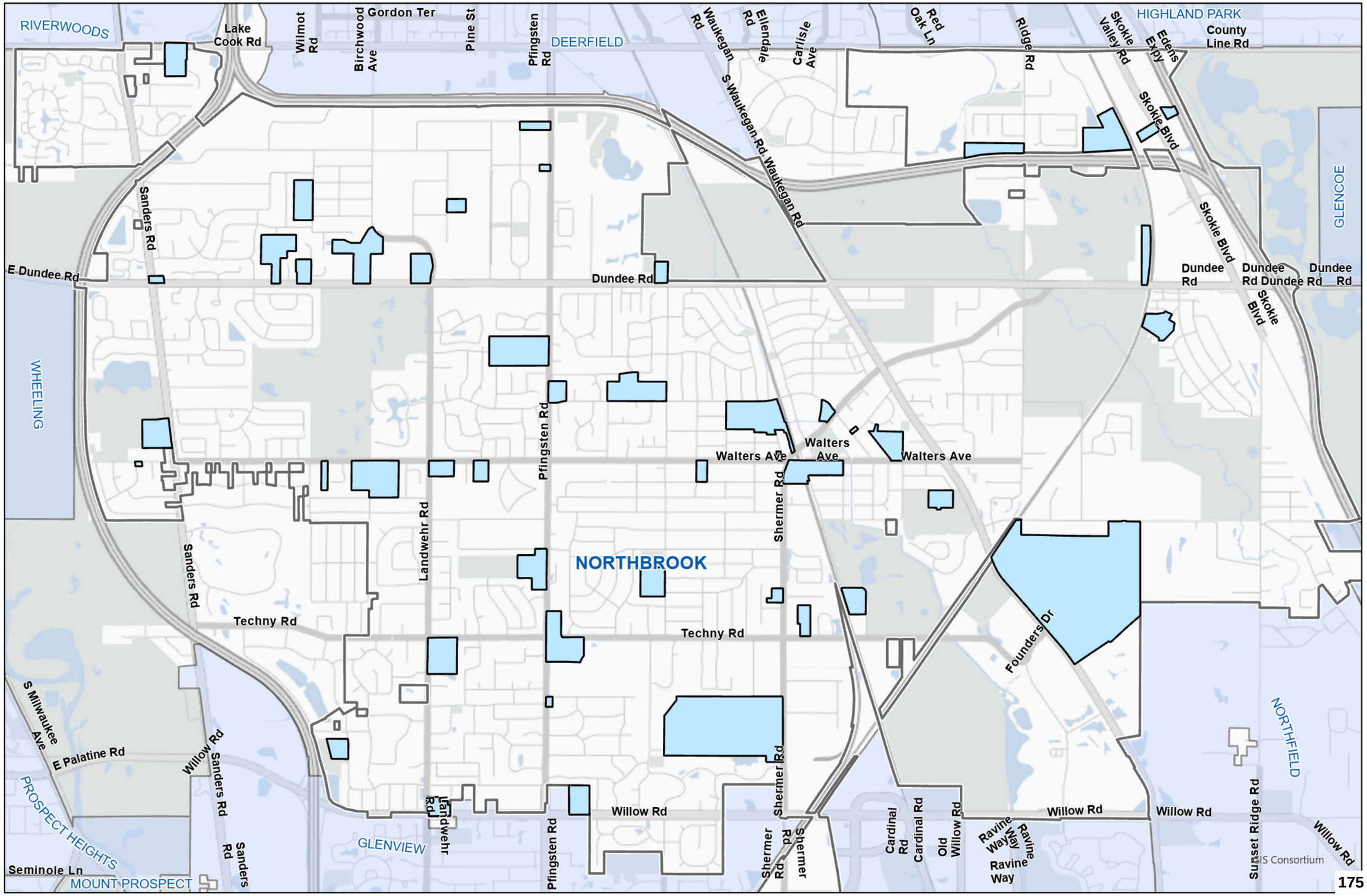

0 0.15 0.3 Miles

N W E S

September 2025

GIS Consortium

VILLAGE-OWNED PROPERTIES & CURRENT ZONING

northbrook

LEGEND

Village Owned Properties Zoning Designation

- Institutional Building District
- Multi-Family Residential Districts
- Neighborhood Commercial District
- Open Space District
- Restricted Industrial District
- Single Family Residential Districts
- Village Green Residential and Commercial District

Zoning Designation

- C2: Neighborhood Commercial District
- I1: Restricted Industrial District
- IB: Institutional Building District
- OS: Open Space District
- R3: Single Family Residential Districts
- R4: Single Family Residential Districts
- R5: Single Family Residential Districts
- R8: Multi-Family Residential Districts
- VGRC: Village Green Residential and Commercial

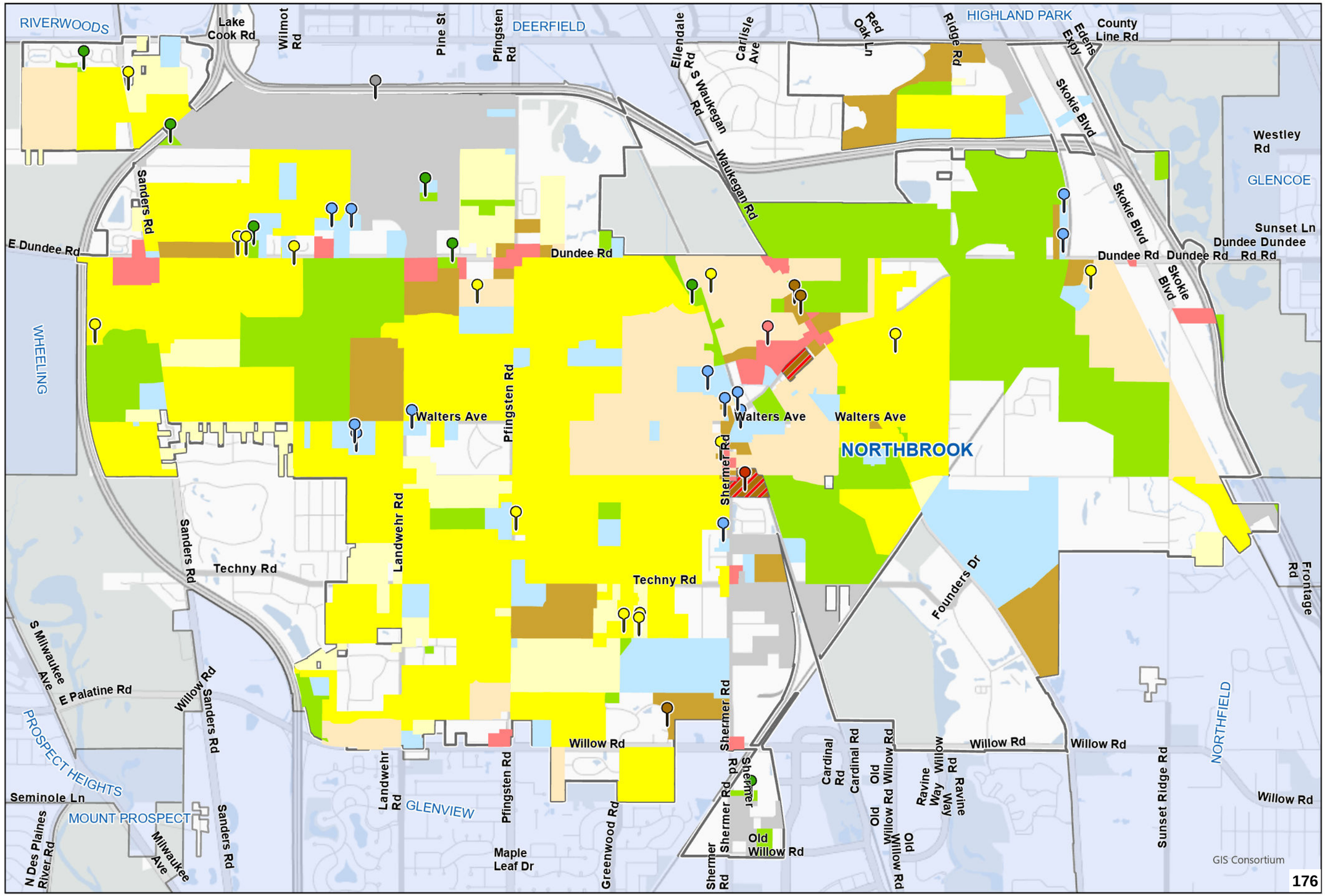

0 0.15 0.3 Miles

N W E S

September 2025

VILLAGE-OWNED PROPERTIES & FUTURE LAND USE

northbrook

LEGEND

VILLAGE OWNED PROPERTIES BY FUTURE LAND USE DESIGNATION

- Community Retail
- Drainage Facility
- General Industrial, Warehouse & Office
- Government Facility
- Institutional Facility
- Major Corridor Multi-Use
- Open Space & Outdoor Recreation
- Private Open Space
- Public Recreation
- Senior or Special Residential
- Single Family
- Transportation, Comm. & Utilities
- Village Center Mixed Use

FUTURE LAND USE DESIGNATION

- Community Retail
- Drainage Facility
- General Industrial, Warehouse & Office
- Government Facility
- Institutional Facility
- Major Corridor Multi-Use
- Open Space & Outdoor Recreation
- Private Open Space
- Public Recreation
- Senior or Special Residential
- Single Family
- Transportation, Comm. & Utilities
- Village Center Mixed Use
- Municipal Boundary
- Other Municipal Boundary

0 0.15 0.3 Miles

N W E S

September 2025

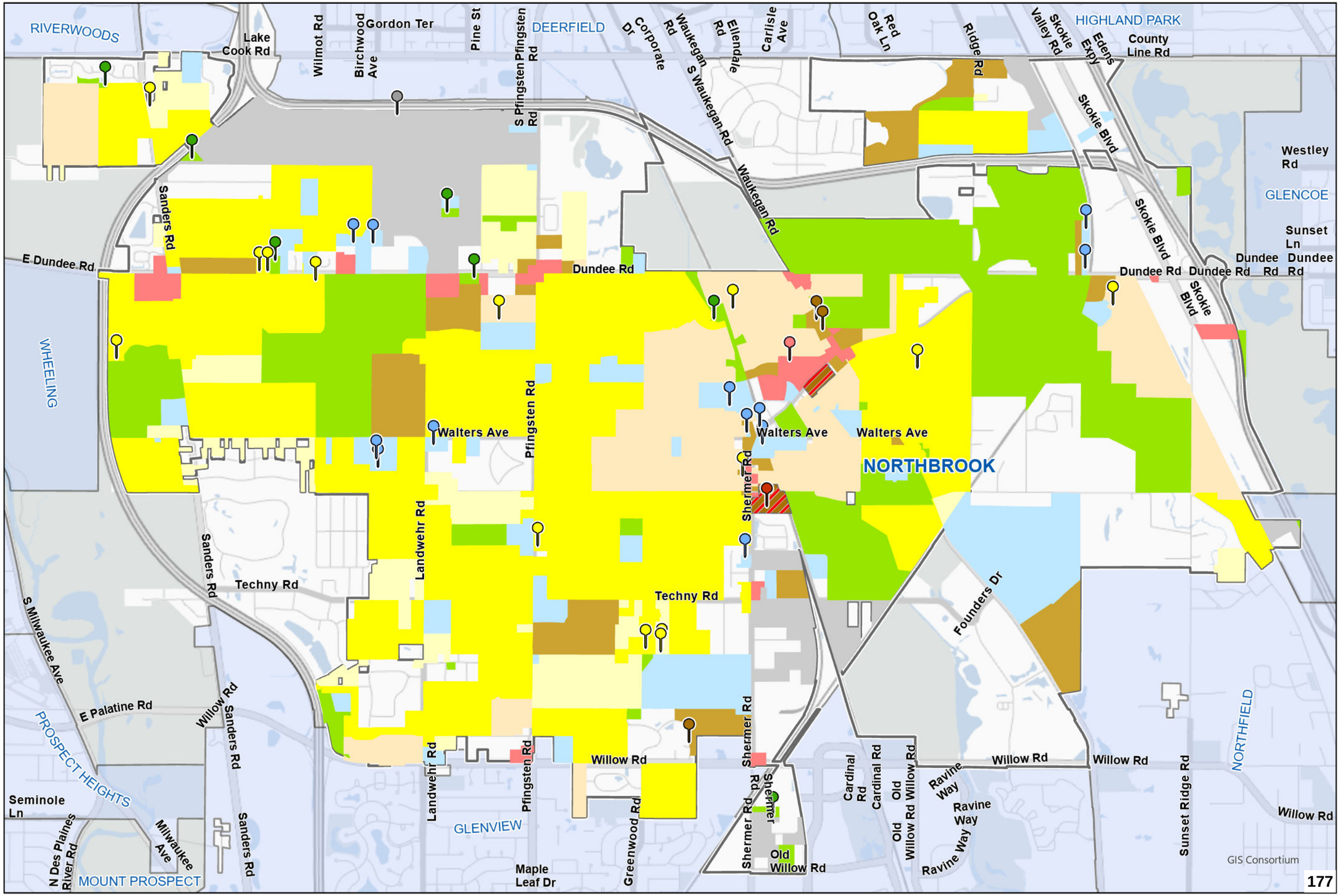

FORMAL APPLICATION – ZONING & SUBDIVISION RELIEF**

Prior to submitting this formal application, the matter must first be reviewed as a preliminary application by the Village Board of Trustees. If the Board has not yet reviewed your preliminary application, please contact the Department of Development & Planning Services to learn what is required. The following materials are the minimum required for the processing of a formal application by the Village of Northbrook's Plan Commission and Board of Trustees. A public hearing or public meeting for an application will not be scheduled until all required materials have been submitted and revised as necessary to meet Code requirements, as determined by Village staff. If you have questions regarding the completion of this application please contact the Development & Planning Services Department at 847-664-4050.
Applications for zoning relief from the Zoning Board of Appeals must use a different application form.

The initial submittal MUST contain:

☒ **1 electronic version (PDF)** of ALL application materials **(refer to application section regarding instructions).**

Applicant Information

Legal Name Village of Northbrook

Company

Address 1225 Cedar Lane

City, State, Zip Northbrook, IL. 60062

[redacted]

Primary Contact Person

Name Cara Pavlicek

Company Village of Northbrook

Address 1225 Cedar Lane

City, State, Zip 60062

[redacted]

Consultants *(as applicable)*

Attorney

Name

Company

Address

City, State, Zip

Phone No.

Email

Architect/Planner

Name Ray Lee

Company FGM Architect

[redacted]

Civil Engineer

Name

Company Eriksson Engineering Associates, Ltd.

[redacted]

Email

Other

Name

Company

Address

City, State, Zip

Phone No.

Email

Property Information *(if more than one parcel is involved in the request please include the information for all parcels)*

Site Location/Address: 820 Dundee Road, Northbrook, IL. 60062

Property Index Numbers: 04-02-301-010-0000

Size of Property: 87,117 (square feet/acres)

Size of Building Space, if applicable: 3000 (square feet)

Comprehensive Plan Land Use Designation[1]: Single Family - Large Lot

Current Zoning: R-2

Current Use of the Property: Residential

Is any portion of the property within the 100-year floodplain?[1] Yes: _____ No: X

Requested Action(s) *(check all that are applicable)*

- [x] Comprehensive Plan Amendment
- [ ] Annexation (*separate form required*)
- [x] Rezoning from R-2 to IB
- [ ] Special Permit for _____
- [ ] Renewal of Special Permit Ord. No. _____
- [ ] Amendment to Existing Special Permit
  Ord. No. _____
- [x] Site Plan Approval
- [ ] Zoning Code Text Amendment
- [x] Zoning Variation (in conjunction with other relief)
  for Reduced Require Lot Width 300' to 167.54'
  Reduced Required Yard (west) 20' to 0'
- [ ] Planned Development - Concept Plan
- [ ] Planned Development - Final Plan
- [ ] Subdivision - Tentative Plat
- [ ] Subdivision - Final Plat
- [ ] Subdivision - Variations/Waiver for _____
- [ ] Exception for _____
- [ ] Other _____

[x] Plat of Survey & Parcel Legal Description(s)

Attach the most recent plat of survey of the Subject Property, certified by a registered land surveyor, showing existing lot lines and dimensions, lot area, all easements, all public and private rights-of-way, and all streets across and adjacent to the subject property.

[x] Conformity with Comprehensive Plan

Include a written statement explaining the conformity, or lack of conformity, of the approval being requested to the Village's Official Comprehensive Plan and Official Map. Where the approval being requested does not conform to the Official Comprehensive Plan or Official Map, provide reasons justifying the requested approval.

[x] Surrounding Property Owners Addresses

Please attach the names and mailing addresses of all property owners of record (not tenants) within 250 feet of the property, excluding public rights-of-way, based on current County tax records. See page10 of this document for instructions on how to obtain the addresses.

[1] As found on the Village website www.northbrook.il.us/Government/Departments/Planning/GIS/index.php

Site Ownership and Control

Current Property Owner Information

Legal Name: Village of Northbrook

Primary Contact: Cara Pavlicek

Address 1225 Cedar Lane

City, State, Zip Northbrook, IL. 60062

[redacted]

Proposed Property Owner Information

Legal Name: _____

Primary Contact: _____

Address _____

City, State, Zip _____

Phone No. _____

Email _____

Attach a copy of a title policy or deed showing current ownership of the property. If property is held in a trust, also include a certified copy of the trust agreement or a simple affidavit (under oath before a notary) as to who are the beneficiaries of the trust. *(Check which document(s) are attached):*

- ☒ Deed
- ☐ Title Policy or Title Commitment ***(Required for Subdivision Applications & Plats of Consolidation Applications)***
- ☐ Certified Copy of Trust Agreement OR a simple Affidavit Identifying Trust Beneficiaries

☐ **Complete Attachment A, listing all individuals/entities that have a beneficial interest in the legal entity that currently owns the property**

☐ **Complete Attachment B, listing all individuals/entities that have a beneficial interest in the legal entity that is proposed to own the property upon receiving necessary approvals.**

Applicants Involvement with the Property

If the Applicant does not own the property, please also provide documentation showing the applicant's interest in the property *(Check which document is attached. The dollar amounts in documents may be blacked-out)*:

- ☐ Owner (see the previous box)
- ☐ Real Estate Contract
- ☐ Lease
- ☐ Other _____

☐ **Complete Attachment C, listing all individuals/entities that have a beneficial interest in the legal entity that is the Applicant.**

Additional Required Attachment(s)

Submit all relevant attachments specified in the below worksheet(s) that correspond with your application request(s) selected on page two of this application; the worksheets can be found on the Village of Northbrook website www.northbrook.il.us, as well as in the Community Planning Department in the Village Hall. *(Check all that are applicable)*

- ☒ Comprehensive Plan Amendment Worksheet
- ☐ Annexation Worksheet
- ☒ Rezoning Worksheet
- ☐ Special Permit Worksheet
- ☐ Site Plan Approval Worksheet
- ☐ Zoning Code Text Amendment Worksheet
- ☒ Zoning Variation Worksheet
- ☐ Planned Development Worksheet- Concept Plan
- ☐ Planned Development Worksheet- Final Plan
- ☐ Subdivision Worksheet – Tentative Plat
- ☐ Subdivision Worksheet - Final Plat
- ☐ Subdivision Worksheet - Variations/Waiver
- ☐ Zoning Exception Worksheet
- ☐ Condominium Conversion Worksheet
- ☐ Plat of Consolidation Worksheet

Filing Fees

All applications require payment of a non-refundable fee, as well as additional funds that are held in escrow to off-set anticipated recoverable expenses. Please attach a check with your application and indicate below the amount of the fee submitted. A copy of the fee schedule is attached to the application form.

$_____ Amount of Non-Refundable Fee

$_____ Amount of Escrow

$_____ Total Application Fee (Non-Refundable Fee plus Escrow)

The escrow covers such items as Village attorney time (currently billing at approx. $400.00 per hour), public notice expenses, public meetings ($50.00 per mtg), & staff review time. If these expenses exceed the initial escrow deposit, the applicant is responsible for additional payment to the Village prior to completing approval process. If the expenses are less than the escrow deposit, the applicant will be issued a refund.

Northbrook Ethics Code *(potential conflicts of interest)*
On a separate sheet of paper list the name, address, nature, and extent of any current or potential interest that any Village officer or employee may have in, or with respect to the owner, the applicant, or the property. **If none, check here:** _____
(For more information, see Sections 2-71 through 2-85 of the Northbrook Municipal Code located on our website, or pick-up a copy of the Northbrook Ethics Code booklet in the Development & Planning Services Department at the Village Hall)

Repeat Application

Has any other application for this property been submitted to the Village and denied within the last two years?
____ yes __X__ no (check one)
If yes, attach a statement of the grounds justifying reconsideration (See Zoning Code Sec. 11-302).

Applicant/Owner Acknowledgments

By execution of this application in the space provided below, the Applicant and Owner(s) do hereby certify, acknowledge, agree and affirm to the Village of Northbrook that:

1. The Village and its representatives have the right, and are hereby granted permission and license, to enter upon the property, and into any structures located thereon, for purposes of conducting any inspections that may be necessary in connection with this application.

2. I (We) have carefully read this application, the Northbrook Zoning Code and Northbrook Subdivision & Development Code and fully understand the terms and provisions of each.

3. I (We) waive any rights to exemption from disclosure under the Illinois Freedom of Information Act of any and all documents and information submitted in connection with this application.

4. I (We), in accordance with the requirements of the Annual Fee Ordinance, the Northbrook Zoning Code and the Northbrook Subdivision & Development Code, agree to pay all applicable filing fees and be responsible for the payment of all reimbursable expenses associated with the processing of this application.

Applicants may attach additional materials or exhibits to this application if necessary or helpful in explaining the relief requested.

Signature of Applicant: Cara Pav **Date** 8/21/2025
Print Name & Title: Cara Pavlicek Village Manager
Signatures of Property Owner(s): Cara Pav **Date** 8/21/2025
Print Name & Title: Cara Pavlicek Village Mgr **Property Address:** 1225 Cedar Lane
****If more than one applicant or property owner, please copy this page and have additional applicants/property owners sign form.**

Note: Village review and approval of rezoning, special permit, and subdivision applications may be dependent upon the Applicant first receiving necessary approvals from State and County regulatory agencies such as, but not limited to, the Illinois Department of Transportation, Illinois Environmental Protection Agency, the Metropolitan Water Reclamation District of Greater Chicago, & the Cook County Highway Department.

COMPREHENSIVE PLAN AMENDMENT WORKSHEET

In addition to submitting the *Formal Application* form for a comprehensive plan amendment request, the Applicant must include the following information with your application. A Plan Commission public hearing for an application will not be scheduled until all required materials have been submitted and revised as necessary to meet Code requirements, as determined by Village staff. All of the required application materials must be submitted to the Department of Development and Planning Services.

The initial submittal MUST contain:

- ☐ **5 collated copies of complete sets** of all application materials including the application form, required attachments, and folded full size plat/plan sheets
- ☒ **1 electronic version (PDF)** of all application materials submitted in a format as described on the last page of the Formal Application form.

REQUIRED MATERIALS FOR SUBMISSION

☒ **Statement of Justification**

A written statement of need for the requested comprehensive plan amendment is required. The statement shall address the following factors as outlined in Subsection 11-301 E of the Zoning Code. The staff, Plan Commission and Board of Trustees will use these standards in making a determination whether or not the proposed Comprehensive Plan Amendment is appropriate. Please complete the below form (use additional paper if needed) and submit this form with the formal application.

a) The existing uses and zoning classifications of properties in the vicinity of the subject property.
See attached summary.

b) The trend of development in the vicinity of the subject property, including changes, if any, in such trend since the subject property was placed in its present plan designation or zoning classification.
See attached summary.

c) The extent to which the value of the subject property is diminished by the existing plan designation or zoning classification applicable to it.
See attached summary.

d) The extent to which such diminution in value is offset by an increase in the public health, safety and welfare.
See attached summary.

e) The extent, if any, to which the use and enjoyment of adjacent properties would be affected by the proposed amendment.
See attached summary.

OVER →

f) The extent, if any, to which the value of adjacent properties would be affected by the proposed amendment.
See attached summary.

g) The extent, if any, to which the future orderly development of adjacent properties would be affected by the proposed amendment.
See attached summary.

h) The suitability of the subject property for uses permitted or permissible under its present plan designation and zoning classification.
See attached summary.

i) The availability of adequate ingress to and egress from the subject property and the extent to which traffic conditions in the immediate vicinity of the subject property would be affected by the proposed amendment.
See attached summary.

j) The availability of adequate utilities and essential public services to the subject property to accommodate the uses permitted or permissible under its present plan designation and zoning classification.
See attached summary.

k) The length of time, if any, that the subject property has been vacant, considered in the context of the pace of development in the vicinity of the subject property.
See attached summary.

l) The community need for the proposed map amendment and for the uses and development it would allow.
See attached summary.

Statement of Justification

A written statement of need for the requested comprehensive plan amendment is required. The statement shall address the following factors as outlined in Subsection 11-301 E of the Zoning Code. The staff, Plan Commission and Board of Trustees will use these standards in making a determination whether or not the proposed Comprehensive Plan Amendment is appropriate. Please complete the below form (use additional paper if needed) and submit this form with the formal application.

a) The existing uses and zoning classifications of properties in the vicinity of the subject property.

The properties to the east are currently residential (R-8) and the properties to the west, north and south are zoned open Space (OS).

b) The trend of development in the vicinity of the subject property including changes, if any, in such trend since the subject property was placed in its present plan designation or zoning classification.

There have been no recent changes in the development trends for the surrounding properties. The properties to the west and north have had previous proposals for zoning changes but no official actions have been taken.

c) The extent to which the value of the subject property is diminished by the existing plan designation or zoning classification applicable to it.

The property has had a few development proposals over the years which included an assisted living development and 15 townhomes. Despite these previous attempts, the property has remained a single-family home and vacant.

d) The extent to which such diminution in value is offset by an increase in public health, safety and welfare.

As the property exists today there is no increase in the public health safety and welfare. The construction of a new fire station will increase these categories by having a state-of-the-art fire station to provide emergency services from.

e) The extent, if any, to which the use and enjoyment of adjacent properties would be affected by the proposed amendment.

The residential units to the east would see a change in the use of the property from residential to a fire station. However, the residents are familiar with the use as it is currently located to the east of their property.

f) The extent, if any, to which the value of adjacent properties would be affected by the proposed amendment.

The adjacent properties would not have their property values impacted by the proposed amendment but could see an increase in property values due to the construction of the new fire station. The new fire station would provide emergency services from a new station with better operational amenities than the existing.

g) The extent, if any, to which the future orderly development of adjacent properties would be affected by the proposed amendment.

The adjacent properties were previously developed with the existing fire station in proximity. Residential properties to the east are well established and the property to the West and north remain open space. The amendments proposed do not directly impact the future development of these properties.

h) The suitability of the subject property for uses permitted or permissible under its present plan designation and zoning classification.

The present plan designation and zoning classification could be used for residential use. The property remains vacant underneath this designation and classification. The past proposed developments have all looked to change this classification due to the lack of desire to redevelopment under the current classifications.

i) The availability of adequate ingress to and egress from the subject property and the extent to which traffic conditions in the immediate vicinity of the subject property would be affected by the proposed amendment.

The primary access for the property will be onto Dundee Road and does not impact the surrounding properties.

j) The availability of adequate utilities and essential public services to the subject property to accommodate the uses permitted or permissible under its present plan designation and zoning classification.

There are suitable utilities and does not impact the provision of essential public services.

k) The length of time, if any, that the subject property has been vacant, considered in the context of the pace of development in the vicinity of the subject property.

The property has not been fully occupied for many years. Previous owners would frequent the home and it was used as storage for personal belongings.

l) The community need for the proposed map amendment and for the uses and development it would allow.

The proposed change will allow for the construction of a new fire station which will replace the existing 54 year old home. This will help improve fire service operations and the residential living conditions for fire staff.

REZONING & ZONING MAP WORKSHEET

In addition to submitting the *Formal Application* form for a rezoning request, also known as a zoning map amendment, the Applicant must include the following information with your application. A Plan Commission public hearing for an application will not be scheduled until all required materials have been submitted and revised as necessary to meet Code requirements, as determined by Village staff. All of the required application materials must be submitted to the Department of Development & Planning Services.

The initial submittal MUST contain:

- ☐ **5 collated copies of complete sets** of all application materials including the application form, required attachments, and folded full size plat/plan sheets
- ☒ **1 electronic version (PDF)** of all application materials submitted in a format as described on the last page of the Formal Application form.

REQUIRED MATERIALS FOR SUBMISSION

- ☐ **Specify Current Zoning District(s)**: R-2 Single Family
- ☐ **Specify Requested Zoning District(s)**: IB - Institutional Building
- ☐ **Statement of Justification**

A written statement of need for the requested rezoning and zoning map amendment is required. The statement of justification shall address the following factors as outlined in Subsection 11-301 E of the Zoning Code. The staff, Plan Commission and Board of Trustees will use these standards in making a determination whether or not the proposed rezoning is appropriate. Please complete the below form (use additional paper if needed) and submit this form with the formal application.

a) The existing uses and zoning classifications of properties in the vicinity of the subject property.

See attached summary.

b) The trend of development in the vicinity of the subject property, including changes, if any, in such trend since the subject property was placed in its present plan designation or zoning classification.

See attached summary.

c) The extent to which the value of the subject property is diminished by the existing plan designation or zoning classification applicable to it.

See attached summary.

d) The extent to which such diminution in value is offset by an increase in the public health, safety and welfare.

See attached summary.

e) The extent, if any, to which the use and enjoyment of adjacent properties would be affected by the proposed amendment.

See attached summary.

OVER →

f) The extent, if any, to which the value of adjacent properties would be affected by the proposed amendment.
See attached summary.

g) The extent, if any, to which the future orderly development of adjacent properties would be affected by the proposed amendment.
See attached summary.

h) The suitability of the subject property for uses permitted or permissible under its present plan designation and zoning classification.
See attached summary.

i) The availability of adequate ingress to and egress from the subject property and the extent to which traffic conditions in the immediate vicinity of the subject property would be affected by the proposed amendment.
See attached summary.

j) The availability of adequate utilities and essential public services to the subject property to accommodate the uses permitted or permissible under its present plan designation and zoning classification.
See attached summary.

k) The length of time, if any, that the subject property has been vacant, considered in the context of the pace of development in the vicinity of the subject property.
See attached summary.

l) The community need for the proposed map amendment and for the uses and development it would allow.
See attached summary.

Statement of Justification

A written statement of need for the requested comprehensive plan amendment is required. The statement shall address the following factors as outlined in Subsection 11-301 E of the Zoning Code. The staff, Plan Commission and Board of Trustees will use these standards in making a determination whether or not the proposed Comprehensive Plan Amendment is appropriate. Please complete the below form (use additional paper if needed) and submit this form with the formal application.

a) The existing uses and zoning classifications of properties in the vicinity of the subject property.

The properties to the east are currently residential (R-8) and the properties to the west, north and south are zoned open Space (OS)

b) The trend of development in the vicinity of the subject property including changes, if any, in such trend since the subject property was placed in its present plan designation or zoning classification.

There have been no recent changes in the development trends for the surrounding properties. The properties to the west and north have had previous proposals for zoning changes but no official actions have been taken.

c) The extent to which the value of the subject property is diminished by the existing plan designation or zoning classification applicable to it.

The property has had a few development proposals over the years which included and assisted living development and 15 townhomes. Despite these previous attempts, the property has remained a single-family home and vacant.

d) The extent to which such diminution in value is offset by an increase in public health, safety and welfare.

As the property exists today there is no increase in the public health safety and welfare. The construction of a new fire station will increase these categories by having a state-of-the-art fire station to provide emergency services from.

e) The extent, if any, to which the use and enjoyment of adjacent properties would be affected by the proposed amendment.

The residential units to the east would see a change in the use of the property from residential to a fire station. However, the residents are familiar with the use as it is currently located to the east of their property.

f) The extent, if any, to which the value of adjacent properties would be affected by the proposed amendment.

The adjacent properties would not have their property values impacted by the proposed amendment but could see an increase in property values due to the construction of the new fire station. The new fire station would provide emergency services from a new station with better operational amenities than the existing.

g) The extent, if any, to which the future orderly development of adjacent properties would be affected by the proposed amendment.

The adjacent properties were previously developed with the existing fire station in proximity. Residential properties to the east are well established and the property to the West and north remain open space. The amendments proposed do not directly impact the future development of these properties.

h) The suitability of the subject property for uses permitted or permissible under its present plan designation and zoning classification.

The present plan designation and zoning classification could be used for residential use. The property remains vacant underneath this designation and classification. The past proposed developments have all looked to change this classification due to the lack of desire to redevelopment under the current classifications.

i) The availability of adequate ingress to and egress from the subject property and the extent to which traffic conditions in the immediate vicinity of the subject property would be affected by the proposed amendment.

The primary access for the property will be onto Dundee Road and does not impact the surrounding properties.

j) The availability of adequate utilities and essential public services to the subject property to accommodate the uses permitted or permissible under its present plan designation and zoning classification.

There are suitable utilities and does not impact the provision of essential public services.

k) The length of time, if any, that the subject property has been vacant, considered in the context of the pace of development in the vicinity of the subject property.

The property has not been fully occupied for many years. Previous owners would frequent the home and it was used as storage for personal belongings.

l) The community need for the proposed map amendment and for the uses and development it would allow.

The proposed change will allow for the construction of a new fire station which will replace the existing 54 year old. This will help improve fire service operations and the residential living conditions for fire staff.

ZONING VARIATION WORKSHEET

In addition to submitting the *Plan Commission Application* form **for a zoning variation in conjunction with a special permit, subdivision, or rezoning application**, the Applicant must include the following information with your application. A Plan Commission public hearing for an application will not be scheduled until all required materials have been submitted and revised as necessary to meet Code requirements, as determined by Village staff. All of the required application materials must be submitted to the Department of Development & Planning Services.

The initial submittal MUST contain:

- ☐ **5 collated copies of complete sets** of all application materials including the application form, required attachments, and folded full size plat/plan sheets
- ☒ **1 electronic version (PDF)** of all application materials submitted in a format as described on the last page of the Formal Application form.

REQUIRED MATERIALS FOR SUBMISSION

☐ **Describe Variation Being Requested:** Reduce the required lot width from 300' to 167.54' in IB District.
Reduce the require side yard on the west side of the property from 20' to 0'.

☐ **Statement of Justification**

Every application filed pursuant to Section 11-503 of the Zoning Code shall provide a statement of how the variation sought would satisfy the standards set forth in Subsection 11-503 F of this Code. The staff, Plan Commission and Board of Trustees will use these standards in making a determination whether or not the proposed variation is appropriate. Please complete the below form (use additional paper if needed) and submit this form with the formal application.

(a) General Standard. No variation of the Zoning Code shall be granted unless the applicant shall establish that carrying out the strict letter of the provisions of Zoning Code would create a particular hardship or a practical difficulty. Such a showing shall require proof that the variation being sought satisfies each of the standards set forth below.

See attached summary.

(b) Unique Physical Condition. The subject property is exceptional as compared to other lots subject to the same provision by reason of a unique physical condition, including presence of an existing use, structure or sign, whether conforming or nonconforming; irregular or substandard shape or size; exceptional topographical features; or other extraordinary physical conditions peculiar to and inherent in the subject property that amount to more than a mere inconvenience to the owner and that relate to or arise out of the lot rather than the personal situation of the current owner of the lot.

See attached summary.

(c) Not Self-Created. The aforesaid unique physical condition is not the result of any action or inaction of the owner or his predecessors in title and existed at the time of the enactment of the provisions from which a variation is sought or was created by natural forces or was the result of governmental action, other than the adoption of the Zoning Code, for which no compensation was paid.

See attached summary.

OVER →

(d) Denied Substantial Rights. The carrying out of the strict letter of the provision from which a variation is sought would deprive the owner of the subject property of substantial rights commonly enjoyed by owners of other lots subject to the same provision.

See attached summary.

(e) Not Merely Special Privilege. The alleged hardship or difficulty is not merely the inability of the owner or occupant to enjoy some special privilege or additional right not available to owners or occupants of other lots subject to the same provision, nor merely an inability to make more money from the sale of the subject property; provided, however, that where the standards herein set out exist, the existence of an economic hardship shall not be a prerequisite to the grant of an authorized variation.

See attached summary.

(f) Code and Plan Purposes. The variation would not result in a use or development of the subject property that would not be in harmony with the general and specific purposes for which the Zoning Code and the provision from which a variation is sought were enacted or the general purpose and intent of the Official Comprehensive Plan.

See attached summary.

(g) Essential Character of the Area. The variation would not result in a use or development on the subject property that:

1. Would be materially detrimental to the public welfare or materially injurious to the enjoyment, use, development value of property or improvements permitted in the vicinity;
2. Would materially impair an adequate supply of light and air to the properties and improvements in the vicinity;
3. Would substantially increase congestion in the public streets due to traffic or parking;
4. Would unduly increase the danger of flood or fire;
5. Would unduly tax public utilities and facilities in the area; or
6. Would endanger the public health or safety.

See attached summary.

COMPLIANCE WITH VILLAGE REGULATIONS

All applications will be reviewed to determine compliance with the following Village codes and regulations:

- Zoning Code
- Subdivision & Development Code
- Standards and Specifications Manual
- Tree Protection and Tree Preservation Ordinance
- Existing Conditions
- Restrictive Covenants
- Development Agreements
- All other applicable Village codes and regulations

The applicant is responsible for ensuring a submitted application includes all of the necessary submittal requirements and meets all applicable standards and requirements of the Village codes.

Village Departments Involved with the Review of Community Planning Applications

- Development & Planning Services
- Fire
- Police
- Public Works/Engineering
- Village Attorney

820 Dundee Road

Statement of Justification

Every application filed pursuant to Section 11-503 of the Zoning Code shall provide a statement of how the variation sought would satisfy the standards set forth in Subsection 11-503 F of this Code. The staff, Plan Commission and Board of Trustees will use these standards in making a determination whether or not the proposed variation is appropriate. Please complete the below form (use additional paper if needed) and submit this form with the formal application.

(a) General Standard. No variation of the Zoning Code shall be granted unless the applicant shall establish that carrying out the strict letter of the provisions of Zoning Code would create a particular hardship or a practical difficulty. Such a showing shall require proof that the variation being sought satisfies each of the standards set forth below.

The lot width of the property is limited by open space to the west and residential properties to the east. In order to meet the IB requirements, the Village would have to buy purchase additional open space to the west or/and residential units to the east. The additional property purchases are not feasible nor available at this time. The Village was able to design the facility for our use even with a substandard lot size for the IB zoning.

(b) Unique Physical Condition. The subject property is exceptional as compared to other lots subject to the same provision by reason of a unique physical condition, including presence of an existing use, structure or sign, whether conforming or nonconforming; irregular or substandard shape or size; exceptional topographical features; or other extraordinary physical conditions peculiar to and inherent in the subject property that amount to more than a mere inconvenience to the owner and that relate to or arise out of the lot rather than the personal situation of the current owner of the lot.

The lot is almost three times longer than it is wide. While the physical size of the lot meets the need of the village for the new fire station, the difference between the width and the length poses difficulties when designing the station so that the Fire Apparatus Bay faces Dundee Rd for emergency response. In order to create the right balance between the operational functions of the station and the living quarters the width of the lot limits the development of the property.

(c) Not Self-Created. The aforesaid unique physical condition is not the result of any action or inaction of the owner or his predecessors in title and existed at the time of the enactment of the provisions from which a variation is sought or was created by natural forces or was the result of governmental action, other than the adoption of the Zoning Code, for which no compensation was paid.

The village did not create this condition of the lot and it has been the same configuration since platted in the 1940s.

(d) Denied Substantial Rights. The carrying out of the strict letter of the provision from which a variation is sought would deprive the owner of the subject property of substantial rights commonly enjoyed by owners of other lots subject to the same provision.

If the zoning variations that are requested are not approved, the village would not be able to construct the fire station in a manner that would be functionally operational to provide emergency services in the most expedient manner possible.

(e) Not Merely Special Privilege. The alleged hardship or difficulty is not merely the inability of the owner or occupant to enjoy some special privilege or additional right not available to owners or occupants of other lots subject to the same provision, nor merely an inability to make more money from the sale of the subject property; provided, however, that where the standards herein set out exist, the existence of an economic hardship shall not be a prerequisite to the grant of an authorized variation.

The location of a fire station is essential for providing emergency services to the residents and businesses in the zone which the station is located. The use of this property is not like other owners or occupants that have similar lots due to the fact that they are not providing the public service that the Village will with the fire station. If the fire station is built on this lot the property will remain under the control of the Village for the intended use.

(f) **Code and Plan Purposes. The variation would not result in a use or development of the subject property that would not be in harmony with the general and specific purposes for which the Zoning Code and the provision from which a variation is sought were enacted or the general purpose and intent of the Official Comprehensive Plan**

The appropriate placement and construction of fire station adds to the local surrounding neighborhood and the community by providing a benefit for all the properties within the Fire Protection District that it is located.

(g) Essential Character of the Area. The variation would not result in a use or development on the subject property that:

1. Would be materially detrimental to the public welfare or materially injurious to the enjoyment, use, development value of property or improvements permitted in the vicinity.

   The use improves the value of the property in the vicinity by providing fire and emergency services.

2. Would materially impair an adequate supply of light and air to the properties and improvements in the vicinity.

   The design of the fire station has taken measures to ensure that it complements the residential properties to the east.

3. Would substantially increase congestion in the public streets due to traffic or parking.

   The current fire station is located on two properties to the east and the traffic will not change. Locating the new station on this property should help improve safety around the railroad tracks and the adjacent sidewalks.

4. Would unduly increase the danger of flood or fire;

   The property would provide suitable stormwater management, and the new facility would have improved fire suppression systems.

5. Would unduly tax public utilities and facilities in the area; or

   The use would not impact utilities in the area.

6. Would endanger the public health or safety.

   The facility would help improve the fire services provided by the facility by addressing operational deficiencies that exist in the current fire station.

1/1

TRUSTEE'S DEED

24GST190164PC

This indenture made this **8th** day of **OCTOBER, 2024,** between **CHICAGO TITLE LAND TRUST COMPANY**, a corporation of Illinois, **as successor land trustee**, under the provisions of a deed or deeds in trust, duly recorded and delivered to said company in pursuance of a trust agreement dated the **9th of MAY, 1995** and known as Trust Number **6951122**
party of the first part, and **The Village of Northbrook, an Illinois home rule municipal corporation**
WHOSE ADDRESS IS
1225 Cedar Lane, Northbrook, IL 60062
party of the second part.

Doc#. 2429522258 Fee: $107.00
CEDRIC GILES
COOK COUNTY CLERK'S OFFICE
Date 10/21/2024 2:29 PM Pg: 1 of 5

Dec ID 20241001626943
ST/Co Stamp 0-658-175-152 ST Tax $0.00 CO Tax $0.00

Reserved for Recorder's Office

WITNESSETH, That said party of the first part, in consideration of the sum of **TEN and no/100 DOLLARS ($10.00) AND OTHER GOOD AND VALUABLE** considerations in hand paid, does hereby **CONVEY AND QUITCLAIM** unto said party of the second part, the following described real estate, situated in **COOK** County, Illinois, to wit:

SEE ATTACHED LEGAL DESCRIPTION

PROPERTY ADDRESS: **820 Dundee Road, Northbrook, IL 60062**

PERMANENT TAX NUMBER(S): 04-02-301-010-0000

together with the tenements and appurtenances thereunto belonging.

TO HAVE AND TO HOLD the same unto said party of the second part, and to the proper use, benefit and behoof forever of said party of the second part.

This deed is executed pursuant to and in the exercise of the power and authority granted to and vested in said trustee by the terms of said deed or deeds in trust delivered to said trustee in pursuance of the trust agreement above mentioned. This deed is made subject to the lien of every trust deed or mortgage (if any there be) of record in said county given to secure the payment of money, and remaining unreleased at the date of the delivery hereof.

IN WITNESS WHEREOF, said party of the first part has caused its corporate seal to be hereto affixed, and has caused its name to be signed to these presents by its Trust Officer, the day and year first above written.

CHICAGO TITLE LAND TRUST COMPANY, CORPORATE SEAL, CHICAGO, ILLINOIS

CHICAGO TITLE LAND TRUST COMPANY,
as Trustee as Aforesaid

By: _____
Gregory Kasprzyk Trust Officer

State of Illinois
County of Cook **SS.**

I, the undersigned, a Notary Public in and for the County and State aforesaid, do hereby certify that the above named Trust Officer of **CHICAGO TITLE LAND TRUST COMPANY**, personally known to me to be the same person whose name is subscribed to the foregoing instrument as such Trust Officer appeared before me this day in person and acknowledged that he/she signed and delivered the said instrument as his/her own free and voluntary act and as the free and voluntary act of the Company; and the said Trust Officer then and there caused the corporate seal of said Company to be affixed to said instrument as his/her own free and voluntary act and as the free and voluntary act of the Company.

Given under my hand and Notarial Seal this **8th** day of **October, 2024.**

_____
NOTARY PUBLIC

OFFICIAL SEAL
JOSEPH W KUHNEN
NOTARY PUBLIC, STATE OF ILLINOIS
MY COMMISSION EXPIRES: 05/04/2027

This instrument was prepared by:
Gregory Kasprzyk Trust Officer
CHICAGO TITLE LAND TRUST COMPANY
10 SOUTH LASALLE STREET, SUITE #2750
CHICAGO, ILLINOIS 60603

AFTER RECORDING, PLEASE MAIL TO:

NAME _____

ADDRESS _____

CITY, STATE, ZIP-CODE _____

OR BOX NO. _____

MAIL TAX BILLS TO:

NAME Village of Northbrook

ADDRESS 1225 Cedar Lane

CITY, STATE, ZIP-CODE Northbrook, IL 60062

Legal Description

THE EAST 2 ACRES OF THE FOLLOWING DESCRIBED TRACT OF LAND:

BEGINNING AT A POINT IN THE SOUTH LINE OF THE SOUTH WEST 1/4 OF SECTION 2, TOWNSHIP 42 NORTH, RANGE 12 EAST OF THE THIRD PRINCIPAL MERIDIAN, 165 FEET WEST OF THE SOUTH EAST CORNER OF SAID SOUTHWEST 1/4; THENCE NORTH 00 DEGREES, 29 MINUTES WEST 520 FEET ALONG A LINE PARALLEL TO THE EAST LINE OF SAID SOUTHWEST 1/4; THENCE NORTH 89 DEGREES, 59 MINUTES WEST 507.8 FEET; THENCE SOUTH 0 DEGREES, 1 MINUTE WEST 520 FEET TO A POINT ON THE SOUTH LINE OF SAID SOUTHWEST 1/4 512 FEET WEST ALONG SAID SOUTH LINE FROM THE PLACE OF BEGINNING; THENCE SOUTH 89 DEGREES, 59 MINUTES EAST ALONG THE SOUTH LINE OF SAID SOUTHWEST 1/4 512 FEET TO THE PLACE OF BEGINNING IN VILLAGE OF NORTHBROOK, IN COOK COUNTY, ILLINOIS

Exempt under Real Estate Transfer Tax Law 35 ILCS 200/31-45 sub par.___B___and Cook County Ord. 93-0-27 par.___B___.

Date 10-15-24 Sign:_____

STATEMENT BY GRANTOR AND GRANTEE

The grantor or his/her agent affirms that, to the best of his/her knowledge, the name of the grantee as shown on the deed or assignment of beneficial interest in a land trust is either a natural person, an Illinois corporation or foreign corporation authorized to do business or acquire and hold title to real estate in Illinois, a partnership authorized to do business or acquire and hold title to real estate in Illinois, or other entity recognized as a person and authorized to do business or acquire title to real estate under the laws of the State of Illinois.

Dated this 10 day of October, 2024.

Signature: _____
Grantor or Agent

SUBSCRIBED and SWORN to before me by said Grantor this 10th day of Oct., 2024.

_____
Notary Public

OFFICIAL SEAL
WALDEMAR WYSZYNSKI
Notary Public, State of Illinois
Commission No. 906422
My Commission Expires December 31, 2027

The grantee or his/her agent affirm and verifies that the name of the grantee as shown on the deed or assignment of beneficial interest in a land trust is either a natural person, an Illinois corporation or foreign corporation authorized to do business or acquire and hold title to real estate in Illinois, a partnership authorized to do business or acquire and hold title to real estate in Illinois, or other entity recognized as a person and authorized to do business or acquire and hold title to real estate under the laws of the State of Illinois.

Dated this _____ day of _____, 2024.

Signature: _____
Grantee or Agent

SUBSCRIBED and SWORN to before me by said Grantee this ____ day of _____, 2024.

_____
Notary Public

NOTE: Any person who knowingly submits a false statement concerning the identity of a grantee shall be guilty of a Class C misdemeanor for the first offense and of a Class A misdemeanor for subsequent offenses.

[Attach to deed or ABI to be recorded in Cook County, Illinois, if exempt under provisions of Section 4 of the Illinois Real Estate Transfer Tax Act.]

STATEMENT BY GRANTOR AND GRANTEE

The grantor or his/her agent affirms that, to the best of his/her knowledge, the name of the grantee as shown on the deed or assignment of beneficial interest in a land trust is either a natural person, an Illinois corporation or foreign corporation authorized to do business or acquire and hold title to real estate in Illinois, a partnership authorized to do business or acquire and hold title to real estate in Illinois, or other entity recognized as a person and authorized to do business or acquire title to real estate under the laws of the State of Illinois.

Dated this _____ day of _____, 2024.

Signature: _____
Grantor or Agent

SUBSCRIBED and SWORN to before me by said Grantor this ____ day of _____,2024.

_____
Notary Public

The grantee or his/her agent affirm and verifies that the name of the grantee as shown on the deed or assignment of beneficial interest in a land trust is either a natural person, an Illinois corporation or foreign corporation authorized to do business or acquire and hold title to real estate in Illinois, a partnership authorized to do business or acquire and hold title to real estate in Illinois, or other entity recognized as a person and authorized to do business or acquire and hold title to real estate under the laws of the State of Illinois.

Dated this 10 day of October, 2024.

Signature: Om Park
Grantee or Agent

SUBSCRIBED and SWORN to before me by said Grantee this 10 day of October, 2024.

_____
Notary Public

OMAR M SHEIKH
Official Seal
Notary Public - State of Illinois
My Commission Expires Jul 25, 2026

NOTE: Any person who knowingly submits a false statement concerning the identity of a grantee shall be guilty of a Class C misdemeanor for the first offense and of a Class A misdemeanor for subsequent offenses.

[Attach to deed or ABI to be recorded in Cook County, Illinois, if exempt under provisions of Section 4 of the Illinois Real Estate Transfer Tax Act.]

Village of Northbrook – Fire Station #11

Proposed Use & Operations

DESCRIPTION OF EXISITNG PROPERTY

The property is roughly 87,000 square feet and has residential structure of 3,000 square feet of space. The residential structure is in disrepair and vacant.

DESCRIPTION OF PROPOSED USE OF PROPERTY

The property will be used to construct a new Fire Station #11

DESCRIPTION OF PROPOSED CHANGES TO THE PROPERTY

The existing residential property will be demolished and prepared for the construction of a new Fire Station #11. The Fire Station will be roughly 23,714 square feet and will have an apparatus bay for fire response vehicles and support functions, office space, living quarters for fire staff, locker rooms, dayroom/kitchen and workout area. This station will be built with many sustainable features which will allow it to be an example of a facility which meets the Village's Climate Action Plan Goals.

With the proposed property improvements above, we are seeking a rezoning to the IB District. This rezoning will be like all the other Village of Northbrook properties and will accommodate the use of the property for a governmental activity facility for the purpose of a fire station. This request will also require an amendment to the Comprehensive Land Use Map and a series of Zoning Code amendments.

HOURS OF OPERATION

This is an emergency response facility and is occupied 24 hours and day.

NUMBER OF EMPLOYEES

The facility will be staffed by 11 full-time employees.

NUMBER OF EXISITNG AND PROPOSED PARKING SPACES

Existing Parking: N/A

Proposal: Parking: 4 Visitor (1 ADA) and 21 (1 ADA) employee parking spaces.

OTHER TENANTS: None

PROPOSED OUTDOOR ACTIVITY: None

Sustainability Responses:

Northbrook's Climate Action Plan (CAP) aims to promote sustainability and reduce community-wide carbon emissions by 80% by the year 2050 through strategic planning and the implementation of targeted action items. Follow the adoption of the CAP, development proposals are reviewed based on the adherence to established environmental best practices. To support this effort, relevant CAP action items should be considered during the preliminary review process. These items serve as guidance to align the proposed developments with the Village's long-term climate goals.

This property is owned by the Village of Northbrook. Several of the items outlined below were the subject of prior discussion by the Board of Trustees at both the Committee of the Whole and Board of Trustees meetings held on April 22, 2025. Items that were part of these discussion are marked with an asterisk (*). These prior discussions offered guidance on several key design elements and help inform the current review process.

Transportation and Land Use
In the Transportation and Land Use section of the CAP, recommendations are made to enhance active mobility and fossil fuel-free transit:

TL 5-2 Consider including wiring capacity to charge electric vehicles.

The Village has designed the facility so that it can support EV charging and is reviewing options for standardized stations to be used at this facility but also other Village facilities.

Buildings and Energy
The Building Energy section of the CAP provides the following items pertaining to reducing our community-wide carbon footprint and preserving wildlife:

BE 1- 1 Use this Village facility to showcase clean energy systems and promote the technical and financial information needed to support broader scale adoption. Conduct a renewable energy potentials assessment for facility.*

The design of the building will meet the goals established by the Board of Trustees at both the Committee of the Whole and Board of Trustees meetings held on April 22, 2025.

BE 2- 1 Consider conducting a Solar PV Site Assessment. Assessment should include estimated installation cost, and projections for both energy generation potential and economic payback potential over a minimum 20-year timeframe. If installation will not be realized, confirm reserved space for solar-ready roof zone and plan for structural design loads and electrical service to allow for future installation of a dual pole circuit breaker if possible.*

The design of the building will meet the goals established by the Board of Trustees at both the Committee of the Whole and Board of Trustees meetings held on April 22, 2025. The facility has been designed to be solar ready and future installations will be possible if the geothermal system needs to be supplemented to meet our goals.

BE 5- 1 Explore opportunities for the property to utilize smart lights that can save energy through conservation. Achieve 100% LED installation if possible.

The facility has been designed so that all the lights will be LED and be managed for energy conservation.

BE 5- 4 Require purchase and installation of ENERGY STAR appliances when available.

The Village will attempt to use ENERGY STAR appliances whenever possible.

BE 7- 2 Consider the benefits of replacing fossil fuel burning heating equipment and with air-source heat-pumps, or other efficient electric heating options in development. Strive for zero on-site fossil fuel combustion with air-source heat-pumps, geo-thermal systems, solar thermal, electric cooktops, etc.*

The design of the building will meet the goals established by the Board of Trustees at both the Committee of the Whole and Board of Trustees meetings held on April 22, 2025, and included a geothermal well system, be an all-electric building.

Waste Management

The CAP points to procedures that may facilitate waste reduction (with a goal of at least 50% landfill wasted diverted by 2030) in its Waste Management section:

WM 2- 5 Assure compliance with the Cook County Construction & Demolition Debris Diversion Ordinance, and encourage contractors and subcontractors to exceed minimum requirements, where demolition occurs.

This will be coordinated during demolition.

WM 2- 7 Consider offering recycling and compost collection services.

The facility has been designed to include both recycling and composting receptacles.

Water and Wastewater
In the Water and Wastewater category, the CAP states to prioritize mitigating stormwater before it enters the
sewer system through multiple capture techniques:

WW 1- 2 Reduce landscaping water use with water-efficient irrigation systems, grass replacement, and planting native and drought-resistant trees and vegetation in landscaping plans.

The landscaping plan will emphasize the use of native plantings and drought-resistant trees and vegetation. There will be no irrigation system.

WW 1- 3 Evaluate the potential for installation of rainwater collection systems at Village facilities for graywater uses, and investigate opportunities for graywater reuse at existing and new Village facilities and properties.

These items were not incorporated into the plan.

WW 1- 4 Consider utilizing water conservation programs that focus on outdoor irrigation, which may also support better identification of water-related carbon sequestering opportunities such as using soil amendments, native grasses and proper tree watering.

The landscaping plan will emphasize the use of native plantings and drought-resistant trees and vegetation. There will be no irrigation system.

WW 2- 1 Prioritize managing stormwater before it enters the sewer system through a combination of overland flow, detention, and infiltration strategies (for example, permeable surfaces) where feasible.*

The design of the building will meet the goals established by the Board of Trustees at both the Committee of the Whole and Board of Trustees meetings held on April 22, 2025.

WW 3- 3 Reduce or offset impervious surfaces where possible and consider use of lighter colored pavements and building materials to lessen the impact of urban heat island effect.

This will be taken under advisement.

Greenspace and Ecosystem Health
The Plan's Greenspace category includes the following for expansion of tree canopy coverage, transforming beneficial lawns, and mitigation of heat island impacts:

GS 2- 5 Consider including exterior lighting design to protect native plants, species, biodiversity, and improve night sky quality.

This will be taken under advisement.

GS 1- 12 Plan for diversity of native tree cover and performance-based tree island within landscaping plan and parking lots with goals on percentage of pavement shaded. Consider a mix of canopy trees, shrubs, groundcovers, and raingarden components appropriate to the lot and its surroundings in any new landscaping where possible.

The landscaping plan will emphasize take this goal into consideration.

8/22/2025

Kelly Hamill
Village of Northbrook
1225 Cedar Ln
Northbrook, IL 60062

Subject: Village of Northbrook – Planning Comments – Fire Station 11
FGMA Job #25-4186.01

Dear Mr Hamill,

The Village of Northbrook Development and Planning Department has provided initial comments regarding the site plan for the Fire Station 11 project. Please see FGMA's responses below:

1. Item C1 c):
    a. See Drawings in Appendix B.
2. Item F2 a):
    a. The parking layout has been modified to accommodate the 9'x20' spaces. See drawings in Appendix B for the updated layout.
3. Item G1 a):
    a. There is not a dedicated loading dock or similar provided as a part of this project. It would subsequently be requested that a reduction of the required number of loading spaces from 1 to 0 is necessary. On the drawings a loading area is indicated immediately south of the Hose Tower. In this location, it would be possible for vehicles to temporarily rest without subsequently blocking vehicles from egressing the Apparatus Bay.
4. Item H6 a):
    a. The project will comply with the required wall sign area of 100 square feet or 5% of the wall area, whichever is less for all signage on each façade.
5. Item H7 a):
    a. See Drawings in Appendix B.
6. Item I6 a):
    a. Understood. All mechanical RTUs will be screened.
7. Item I8 a):
    a. The trash enclosure has been removed from the Front Yard and is now located in the Rear Yard, at the NW corner of the property and "behind" the perimeter fence system.
8. Items K10 a), K11 a) and K12 a) and K12 b):
    a. These items are not directly applicable to FGM Architects.

Sincerely,

Chris Grandy, AIA | Architect, Project Manager
ChristopherGrandy@fgmarchitects.com

cc:

Enclosure(s):

Exhibit A – Village Development and Planning Department Docket Review Checklist – Review #1
Exhibit B – Plan Commission Drawings, Fire Station 11
Exhibit C – Village of Northbrook Zoning Appendix C

Archived: Monday, September 8, 2025 12:26:05 PM
From: Hamill, Kelly
Sent: Friday, August 22, 2025 1:18:22 PM
To: Kohlstedt, Michaela; Christopher Grandy; Pandey, Swati
Cc: Ray Lee; Jeremy Grossman; Randy Reyes
Subject: RE: FGMA - NB Fire - Planning comments, drawings
Response requested: Yes
Sensitivity: Normal

Michaela,

The PIN column should have been fixed. It was having some display issues. The Village will work with the utility companies to have them bury the lines.

I need to look at the revised parking drawing.

Kelly Hamill
Director of Public Works
kelly.hamill@northbrook.il.us
Village of Northbrook | 655 Huehl Rd. | Northbrook, Illinois 60062
847-272-4711 (t)
847-664-4110 (d)
www.northbrook.il.us

From: Kohlstedt, Michaela <Michaela.Kohlstedt@northbrook.il.us>
Sent: Friday, August 22, 2025 12:55 PM
To: Christopher Grandy <ChristopherGrandy@fgmarchitects.com>; Hamill, Kelly <Kelly.Hamill@northbrook.il.us>; Pandey, Swati <Swati.Pandey@northbrook.il.us>
Cc: Ray Lee <RayLee@fgmarchitects.com>; Jeremy Grossman <JeremyGrossman@fgmarchitects.com>; Randy Reyes <RandyReyes@fgmarchitects.com>
Subject: RE: FGMA - NB Fire - Planning comments, drawings

Kelly, let me know if the documents attached in the below is approved by you to be the resubmittal. The only thing missing then is the updated PIN column on the surrounding property owner list, and a written request that you requesting a waiver of the requirement to bury the overhead utility lines.

Michaela Kohlstedt, AICP (She/Her/Hers)
Deputy Director | Village of Northbrook
Development & Planning Services
1225 Cedar Lane | Northbrook, IL 60062
847-664-4057



From: Christopher Grandy <ChristopherGrandy@fgmarchitects.com>
Sent: Friday, August 22, 2025 12:44 PM
To: Hamill, Kelly <Kelly.Hamill@northbrook.il.us>
Cc: Ray Lee <RayLee@fgmarchitects.com>; Jeremy Grossman <JeremyGrossman@fgmarchitects.com>; Randy Reyes <RandyReyes@fgmarchitects.com>; Kohlstedt, Michaela <Michaela.Kohlstedt@northbrook.il.us>
Subject: RE: FGMA - NB Fire - Planning comments, drawings

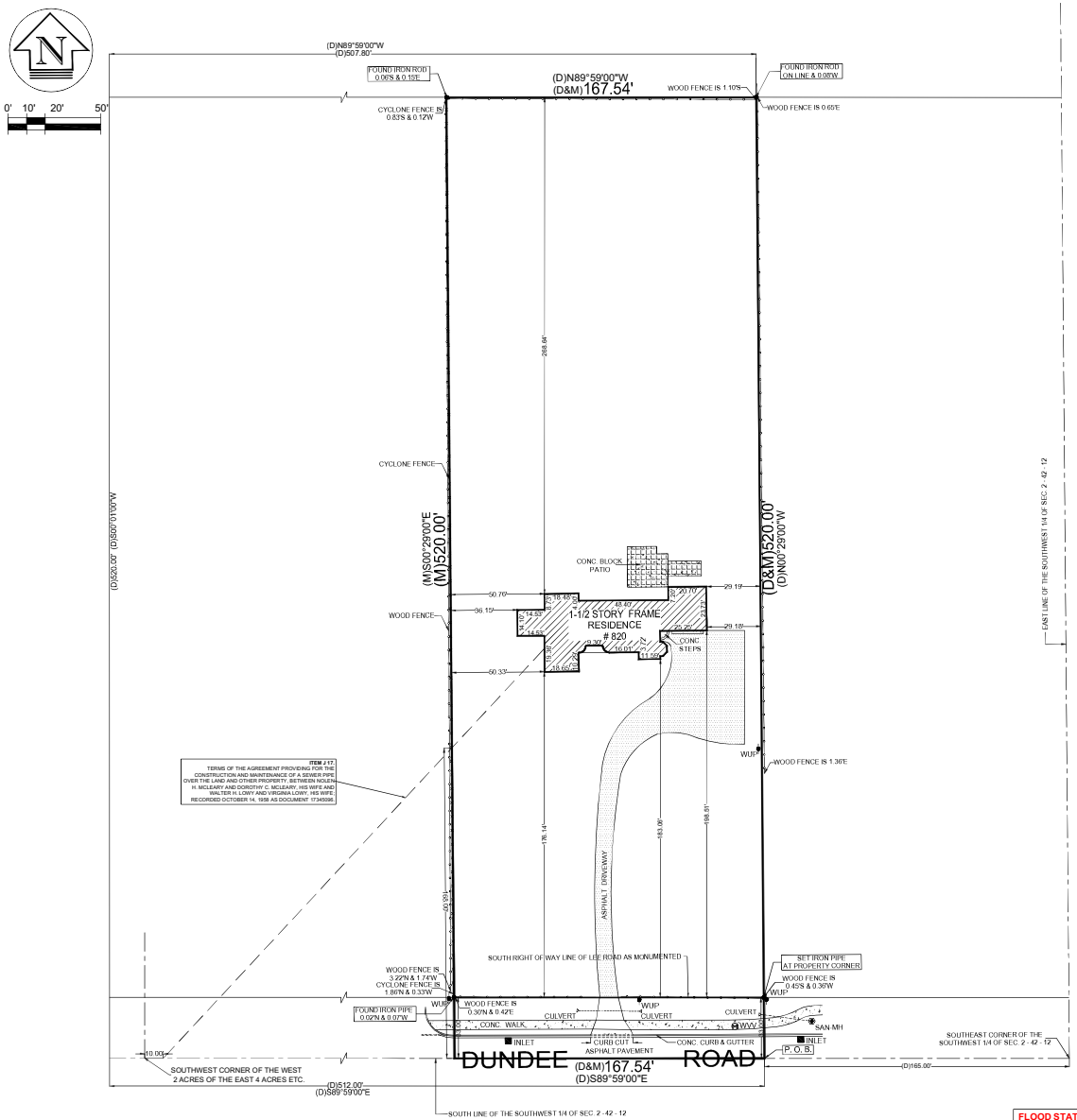

ORDERED BY:		
KEITH L. MOORE, ESQ.		
SCALE : 1" = 30'		
DATE :JULY 12, 2021		
FILE No.:	08/27/24	REVISED
2021 - 29041	DATE	REVISION

LEGEND	ABBREVIATIONS
SAN-MH	SANITARY MANHOLE
INLET	INLET
WVV	WATER VALVE VAULT
WUP	WOOD UTILITY POLE
(D)	DEED DATA
(M)	MEASURED DATA

LOCATION MAP

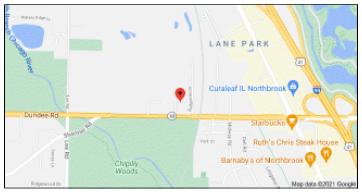

VILLAGE OF NORTHBROOK, ILLINOIS

ZONING REQUIREMENTS:

R-8 - MULTY-FAMILY (UP TO 9 DUA)

NOTES:

-THE SUBJECT PROPERTY HAS ACCESS TO AND FROM A DULY DEDICATED AND ACCEPTED PUBLIC STREET **DUNDEE ROAD**.;

-THE SURVEY AND THE INFORMATION, COURSES AND DISTANCES SHOWN THEREON ARE CORRECT;

-THE TITLE LINES AND LINES OF ACTUAL POSSESSION ARE THE SAME;

-THE SUBJECT PROPERTY DOES NOT SERVE ANY ADJOINING PROPERTY FOR DRAINAGE, UTILITIES, OR INGRESS OR EGRESS;

- ELECTRIC, GAS, TELEPHONE AND WATER UTILITY AND STORM AND SANITARY SEWER SYSTEMS ACCESS THE PROPERTY IN LEGALLY DEDICATED RIGHTS OF WAY THAT BENEFIT THE PROPERTY.

- THERE ARE NO VISIBLE EVIDENCE OF CEMETERIES, GRAVE SITES OR BURIAL GROUNDS LOCATED ON THE PROPERTY.

- ITEM # 8 FROM TABLE A
ALL SUBSTANTIAL FEATURES OBSERVED ON THE PROPERTY HAVE BEEN PLOTTED.

- ITEM # 9 FROM TABLE A
THERE ARE NO STRIPED PARKING SPACES ON THE PROPERTY.

- ITEM # 10 FROM TABLE A
THERE ARE NO PARTY WALLS (ALL WALLS ARE INDEPENDENT).

- ITEM # 11 FROM TABLE A
ALL VISIBLE UTILITIES ARE PLOTTED.

- ITEM # 16 FROM TABLE A
AT THE TIME OF THIS SURVEY, NO VISIBLE RECENT EARTH MOVING WORK, BUILDING CONSTRUCTION OR BUILDING ADDITIONS WITHIN RECENT MONTHS WERE NOTED.

- ITEM # 17 FROM TABLE A
AT THE TIME OF THIS SURVEY, THERE IS NO EVIDENCE OF CHANGES IN RIGHT OF WAY EITHER COMPLETED OR PROPOSED AND RECENT STREET OR SIDEWALK CONSTRUCTION OR REPAIRS.

- ITEM # 20 FROM TABLE A
RELATING TO PROFESSIONAL LIABILITY INSURANCE POLICY OBTAINED BY THE SURVEYOR IN THE MINIMUM AMOUNT OF $ 1,000,000 TO BE IN EFFECT THROUGHOUT THE CONTRACT TERM. CERTIFICATE OF INSURANCE TO BE FURNISHED UPON REQUEST.

FLOOD STATEMENT:

SAID DESCRIBED PROPERTY IS LOCATED WITHIN AN AREA HAVING A ZONE DESIGNATION **"X"** - AREAS DETERMINED TO BE OUTSIDE THE 0.2% ANNUAL CHANCE FLOODPLAIN BY THE SECRETARY OF HOUSING AND URBAN DEVELOPMENT, ON FLOOD INSURANCE RATE MAP **17031 C 0093 J,** WITH A DATE OF IDENTIFICATION OF **AUGUST 19, 2008**, FOR COMMUNITY NUMBER **170132 0093 J**, IN COOK COUNTY, STATE OF ILLINOIS, WHICH IS THE CURRENT FLOOD INSURANCE RATE MAP FOR THE COMMUNITY IN WHICH SAID PROPERTY IS SITUATED.

UNITED SURVEY SERVICE, LLC
CONSTRUCTION AND LAND SURVEYORS
7710 CENTRAL AVENUE, RIVER FOREST, IL 60305
TEL.: (847) 299 - 1010 FAX : (847) 299 - 5887 FAX : (244) 633 - 5048
E-MAIL: USURVEY@USANDCS.COM

ALTA / NSPS LAND TITLE SURVEY

OF

THE EAST 2 ACRES OF THE FOLLOWING DESCRIBED TRACT OF LAND: BEGINNING AT A POINT IN THE SOUTH LINE OF THE SOUTHWEST 1/4 OF SECTION 2, TOWNSHIP 42 NORTH, RANGE 12, EAST OF THE THIRD PRINCIPAL MERIDIAN, 165 FEET WEST OF THE SOUTHEAST CORNER OF SAID SOUTHWEST 1/4, THENCE NORTH 00 DEGREES 29 MINUTES WEST 520 FEET ALONG A LINE PARALLEL TO THE EAST LINE OF SAID SOUTHWEST 1/4; THENCE NORTH 89 DEGREES 59 MINUTES WEST 507.80 FEET; THENCE SOUTH 00 DEGREES 1 MINUTE WEST 520 FEET TO A POINT ON THE SOUTH LINE OF SAID SOUTHWEST 1/4 512 FEET WEST ALONG SAID SOUTH LINE FROM THE PLACE OF BEGINNING; THENCE SOUTH 89 DEGREES 59 MINUTES EAST ALONG THE SOUTH LINE OF SAID SOUTHWEST 1/4 512 FEET TO THE PLACE OF BEGINNING IN VILLAGE OF NORTHBROOK, IN COOK COUNTY, ILLINOIS.

KNOWN AS: **820 DUNDEE ROAD, NORTHBROOK, ILLINOIS**

PERMANENT INDEX NUMBER: 04 - 02 - 301 - 010 - 0000

AREA = 87,118 SQ. FT. OR 2.00 ACRES

NOTE:
THE LEGAL DESCRIPTION DESCRIBES THE SAME PROPERTY AS INSURED IN THE TITLE COMMITMENT OR ANY EXCEPTIONS HAVE BEEN NOTED HEREIN.

CHICAGO TITLE AND TRUST COMPANY
COMMITMENT NO.: **21SA6282083SK**
EFFECTIVE DATE: **JUNE 28, 2021**

ITEMS CORRESPONDING TO SCHEDULE B, PART II:

ITEMS 1 - F 13.
NOT SURVEY RELATED.

ITEM G 14.
RIGHTS OF WAY FOR DRAINAGE TILES, DITCHES, FEEDERS, LATERALS AND UNDERGROUND PIPES, IF ANY.

ITEM H 15.
RIGHTS OF THE PUBLIC, THE STATE OF ILLINOIS AND THE MUNICIPALITY IN AND TO THAT PART OF THE LAND, IF ANY, TAKEN OR USED FOR ROAD PURPOSES.

ITEM I 16.
EASEMENT TO PUBLIC SERVICE COMPANY OF NORTHERN ILLINOIS TO ERECT AND MAINTAIN POLES, CABLES AND OTHER EQUIPMENT IN, UPON AND ACROSS THE LAND AS CONTAINED IN A GRANT FROM CHARLES SCHNADT (NOT DATED) AND RECORDED DECEMBER 31, 1917 AS DOCUMENT 6254920.
(UNABLE TO BE PLOTTED - DOCUMENT DOES NOT GIVE EXACT LOCATION)

ITEM J 17.
TERMS OF THE AGREEMENT PROVIDING FOR THE CONSTRUCTION AND MAINTENANCE OF A SEWER PIPE OVER THE LAND AND OTHER PROPERTY, BETWEEN NOLEN H. MCLEARY AND DOROTHY C. MCLEARY, HIS WIFE AND WALTER H. LOWY AND VIRGINIA LOWY, HIS WIFE; RECORDED OCTOBER 14, 1958 AS DOCUMENT 17345096.
(PLOTTED ON THE DRAWING)

STATE OF ILLINOIS)
) SS
COUNTY OF COOK)

I, **ROY G. LAWNICZAK**, A REGISTERED LAND SURVEYOR, **LICENSE NO. 35-2290**, IN AND FOR THE STATE OF ILLINOIS AND LEGALLY DOING BUSINESS IN COOK COUNTY, DO HEREBY CERTIFY TO:

- CHICAGO TITLE LAND TRUST COMPANY, SUCCESSOR TRUSTEE UNDER TRUST AGREEMENT DATED MAY 9, 1995 AND KNOWN AS TRUST NUMBER 6951122

- CHICAGO TITLE INSURANCE COMPANY

AND TO THEIR SUCCESSORS AND ASSIGNS, THAT:

THIS IS TO CERTIFY THAT THIS MAP OR PLAT AND THE SURVEY ON WHICH IT IS BASED WERE MADE IN ACCORDANCE WITH **2021 MINIMUM STANDARD DETAIL REQUIREMENTS FOR ALTA / NSPS LAND TITLE SURVEYS JOINTLY ESTABLISHED AND ADOPTED BY ALTA AND NSPS**, AND INCLUDES ITEMS 1, 2, 3, 4, 6(b), 7(a), 7(b)(1),7(c), 8, 9, 10(a), 11(a), 14, 16 17, AND 20 OF TABLE A THEREOF.

THE FIELD WORK WAS COMPLETED ON JULY 12, 2021

DATE OF PLAT: JULY 29, 2021.

ROY G. LAWNICZAK
35-002290
PROFESSIONAL LAND SURVEYOR
STATE OF ILLINOIS
CHICAGO, IL

BY: _____

ROY G. LAWNICZAK, REGISTERED ILLINOIS LAND SURVEYOR NO. 35-2290
LICENSE EXPIRES: NOVEMBER 30, 2022
PROFESSIONAL DESIGN FIRM LICENSE NO.: 184-004576
LICENSE EXPIRES: APRIL 30, 2023

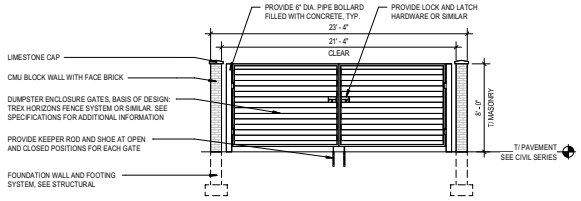

2 TRASH ENCLOSURE
3/16" = 1'-0"

GENERAL SITE PLAN NOTES

1. REFER TO G-SERIES SHEETS FOR TYPICAL ABBREVIATIONS, SYMBOLS & TAGS.
2. REFER TO CIVIL AND LANDSCAPE DRAWINGS FOR ADDITIONAL INFORMATION.
3. EXPOSED FERROUS METALS ARE TO BE PAINTED, U.N.O.
4. PROVIDE GALVANIC SEPARATION BETWEEN DIFFERENT METAL TYPES, TYP.
5. NOTE ANY DISCREPANCIES BETWEEN CIVIL AND ARCHITECTURAL DRAWINGS WITH REGARDS TO SCORING PATTERNS AND CONTROL JOINTS IN PAVING AND CONCRETE FLATWORK AND NOTIFY ARCHITECT PRIOR TO PROCEEDING.
6. COORDINATE SITE LIGHTING WITH ELECTRICAL DRAWINGS.
7. SEE LANDSCAPE DRAWINGS FOR TREE LOCATIONS.
8. FOR DETAILED CIVIL NOTES, REFER TO CIVIL DRAWINGS.

SITE PLAN LEGEND

- PROPERTY LINE
- EASEMENT
- SETBACK LINE
- RIGHT OF WAY LINE
- FENCE LINE
- INDICATES CONCRETE SIDEWALK. COORDINATE WITH THE CIVIL SCOPE OF WORK.
- INDICATES HEAVY DUTY CONCRETE PAVEMENT. COORDINATE WITH THE CIVIL SCOPE OF WORK.
- INDICATES HEAVY DUTY ASPHALT PAVEMENT. COORDINATE WITH THE CIVIL SCOPE OF WORK.
- INDICATES ASPHALT PAVEMENT. COORDINATE WITH THE CIVIL SCOPE OF WORK.
- INDICATES BUILDING FOOTPRINT
- INDICATES SNOW MELT SYSTEM. COORDINATE WITH THE CIVIL AND MECHANICAL SCOPE OF WORK.
- EXISTING UTILITY POLE
- FIRE HYDRANT. COORDINATE WITH THE CIVIL SCOPE OF WORK.
- SOLAR POWERED FLASHING BEACON. COORDINATE WITH THE CIVIL SCOPE OF WORK.

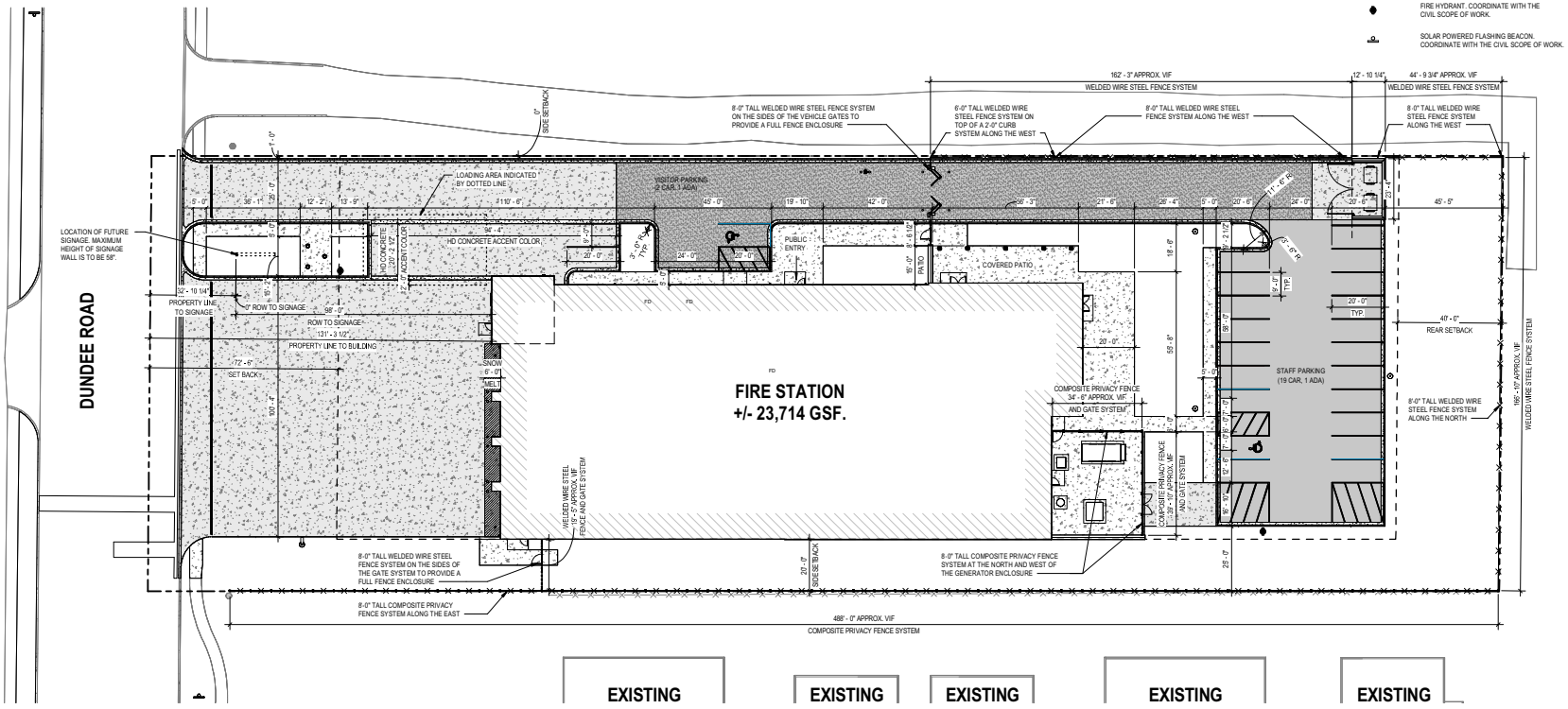

1 OVERALL SITE PLAN
3/64" = 1'-0"

fgma
FGMA ARCHITECTS
FGM Architects
1 Westbrook Corporate Center
Suite 1000
Westchester, Illinois 60154
630.574.8300 OFFICE
ILLINOIS PROFESSIONAL DESIGN FIRM #184.003392

CIVIL & LANDSCAPE
ERIKSSON ENGINEERING ASSOCIATES, LTD.
145 COMMERCE DRIVE, SUITE A
GRAYSLAKE, ILLINOIS, 60030
847.223.4804 (O)
IL STATE CERTIFICATE OF AUTHORITY

STRUCTURAL
McCLUSKEY ENGINEERING CORPORATION
1807 HIGH GROVE LANE
NAPERVILLE, ILLINOIS, 60540
630.717.5399 (O) 630.717.539781
IL STATE CERTIFICATE OF AUTHORITY

M.E.P.FP.
CONSOLIDATED CONSULTING ENGINEERS
224 SOUTH MILWAUKEE AVENUE, SUITE E
WHEELING, IL ILLINOIS, 60090
847.215.0600 (O)
IL STATE CERTIFICATE OF AUTHORITY

NOT FOR CONSTRUCTION

FOR REVIEW ONLY

Not for regulatory approval, permit or construction.

The information on this document is preliminary or incomplete, not for construction, recording purposes, or implementation.

ISSUANCE		
NO	DATE	DESCRIPTION
	06/27/2025	100% DESIGN DEVELOPMENT

NORTHBROOK FIRE STATION 11
VILLAGE OF NORTHBROOK
820 DUNDEE ROAD, NORTHBROOK, IL

ISSUED FOR PLAN COMMISSION - 08/22/2025

SITE PLAN

SHEET NO.
PC1.10

JOB NO. 25-4186.01

© 2025 FGM Architects

9/9/2025 11:54:33 AM
Autodesk Docs://Northbrook Fire Station 11/25-4186.01_Northbrook_Fire_Station_11_CD_2024.rvt
Copyright 2025 FGM ARCHITECTS

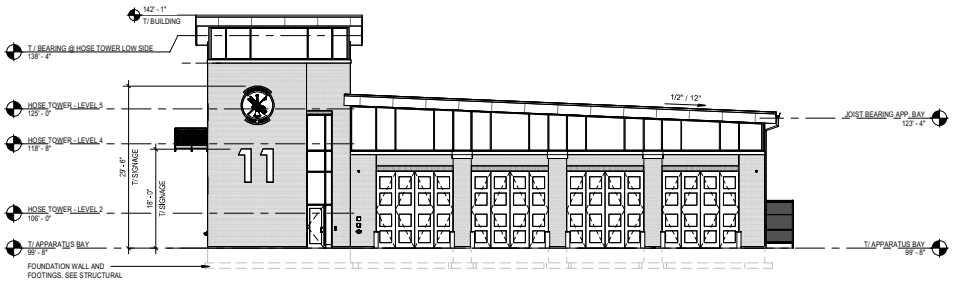

2 EXTERIOR ELEVATION SOUTH

3/32" = 1'-0"



1 EXTERIOR ELEVATION WEST

3/32" = 1'-0"

fgma
FGMA ARCHITECTS
FGM Architects
1 Westbrook Corporate Center
Suite 1000
Westchester, Illinois 60154
630.574.8300 OFFICE
ILLINOIS PROFESSIONAL DESIGN
FIRM #184.008336

CIVIL & LANDSCAPE
ERIKSSON ENGINEERING ASSOCIATES, LTD.
145 COMMERCE DRIVE, SUITE A
GRAYSLAKE, ILLINOIS, 60030
847.223.4804 (O)
IL STATE CERTIFICATE OF AUTHORITY

STRUCTURAL
McCLUSKEY ENGINEERING CORPORATION
1807 HIGH GROVE LANE
NAPERVILLE, ILLINOIS, 60540
630.717.5399 (O) 630.717.539781
IL STATE CERTIFICATE OF AUTHORITY

M.E.P.FP
CONSOLIDATED CONSULTING ENGINEERS
224 SOUTH MILWAUKEE AVENUE, SUITE E
WHEELING, ILLINOIS, 60090
847.215.0600 (O)
IL STATE CERTIFICATE OF AUTHORITY

NOT FOR CONSTRUCTION

FOR REVIEW ONLY

Not for regulatory approval, permit or construction.

The information on this document is preliminary or incomplete, not for construction, recording purposes, or implementation.

ISSUANCE		
NO	DATE	DESCRIPTION
	06/27/2025	100% DESIGN DEVELOPMENT

NORTHBROOK FIRE STATION 11
VILLAGE OF NORTHBROOK
820 DUNDEE ROAD, NORTHBROOK, IL

ISSUED FOR PLAN COMMISSION - 08/22/2025

EXTERIOR ELEVATIONS

SHEET NO.
PC1.20

JOB NO. 25-4186.01

© 2025 FGM Architects

9/9/2025 11:42:29 AM
Autodesk Docs://Northbrook Fire Station 11/25-4186.01_Northbrook_Fire_Station_11_CD_2024.rvt
Copyright 2025 FGM ARCHITECTS

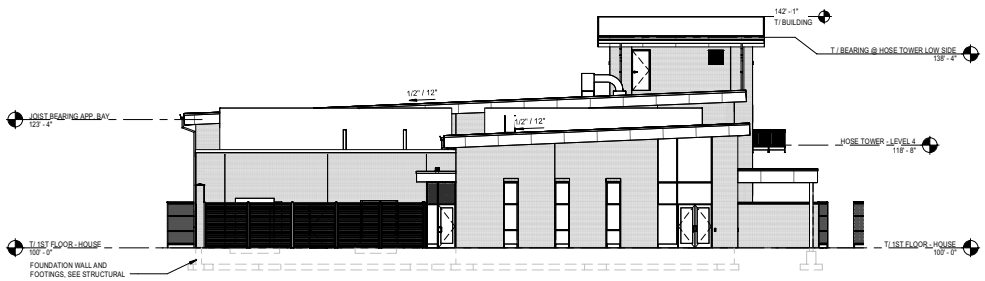

2 EXTERIOR ELEVATION NORTH

3/32" = 1'-0"

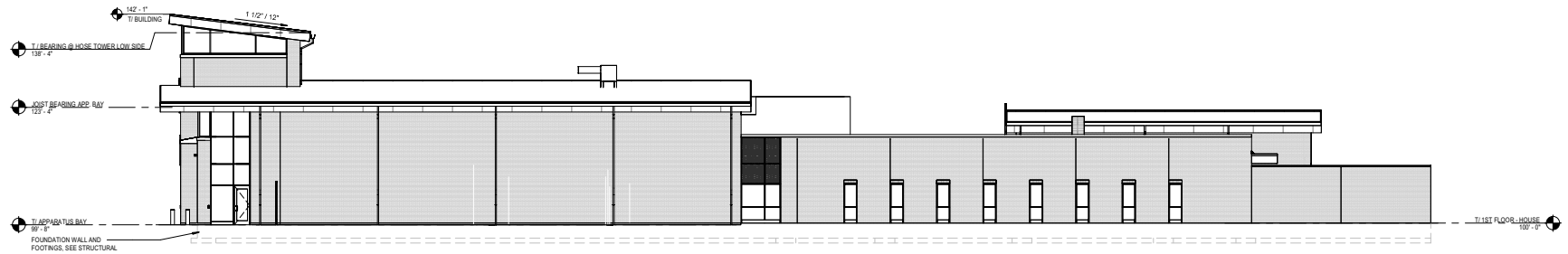

1 EXTERIOR ELEVATION EAST

3/32" = 1'-0"

fgma
FGMARCHITECTS

FGM Architects
1 Westbrook Corporate Center
Suite 1000
Westchester, Illinois 60154

630.574.8300 OFFICE

ILLINOIS PROFESSIONAL DESIGN
FIRM #184.008390

CIVIL & LANDSCAPE
ERIKSSON ENGINEERING ASSOCIATES, LTD.
141 COMMERCE DRIVE, SUITE A
GRAYSLAKE, ILLINOIS, 60030
847.223.4804 (O)
IL STATE CERTIFICATE OF AUTHORITY

STRUCTURAL
McCLUSKEY ENGINEERING CORPORATION
1807 HIGH GROVE LANE
NAPERVILLE, ILLINOIS, 60540
630.717.5399 (O) 630.717.539781
IL STATE CERTIFICATE OF AUTHORITY

M.E.P.FP
CONSOLIDATED CONSULTING ENGINEERS
224 SOUTH MILWAUKEE AVENUE, SUITE E
WHEELING, ILLINOIS, 60090
847.215.0600 (O)
IL STATE CERTIFICATE OF AUTHORITY

NOT FOR CONSTRUCTION

FOR REVIEW ONLY

Not for regulatory approval, permit or construction.

The information on this document is preliminary or incomplete, not for construction, recording purposes, or implementation.

ISSUANCE		
NO	DATE	DESCRIPTION
	06/27/2025	100% DESIGN DEVELOPMENT

NORTHBROOK FIRE STATION 11
VILLAGE OF NORTHBROOK
820 DUNDEE ROAD, NORTHBROOK, IL

ISSUED FOR PLAN COMMISSION - 08/22/2025

EXTERIOR ELEVATIONS

SHEET NO.
PC1.21

JOB NO. 25-4186.01

© 2025 FGM Architects

9/9/2025 11:42:31 AM
Autodesk Docs://Northbrook Fire Station 11/25-4186.01_Northbrook_Fire_Station_11_CD_2024.rvt
Copyright 2025 FGM ARCHITECTS

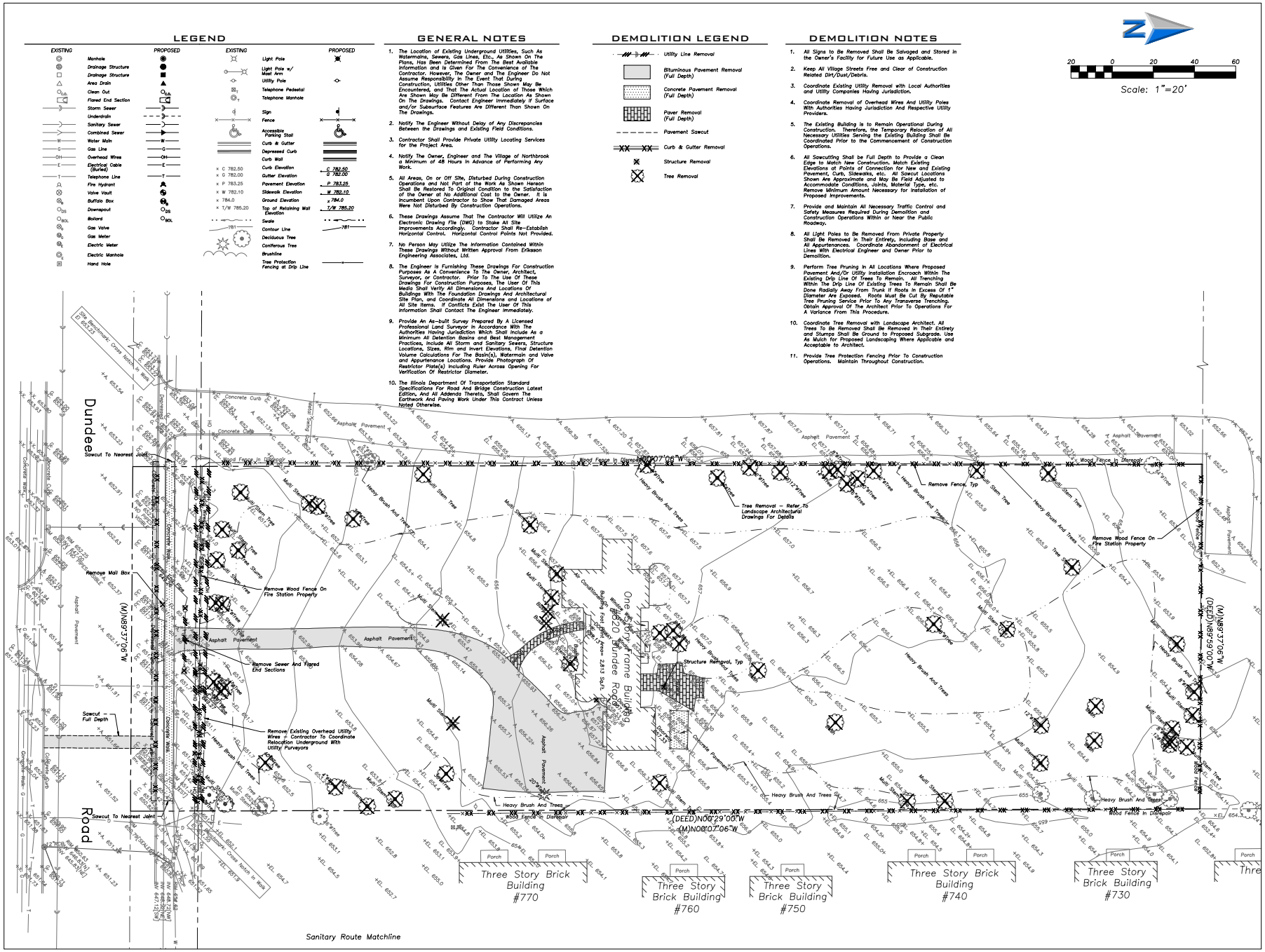

fgma
FGMA ARCHITECTS
FGM Architects
1 Westbrook Corporate Center
Suite 1000
Westchester, Illinois 60154
630.574.8300 OFFICE
ILLINOIS PROFESSIONAL DESIGN FIRM #184.005592

CIVIL & LANDSCAPE
ERIKSSON ENGINEERING ASSOCIATES, LTD.
181 CHANNING DRIVE, SUITE A
GRAYSLAKE, ILLINOIS, 60030
(847.223.4804 (O)
IL STATE CERTIFICATE OF AUTHORITY

STRUCTURAL
McCLUSKEY ENGINEERING CORPORATION
1387 HIGH GROVE LANE
NAPERVILLE, ILLINOIS, 60540
630.717.5999 (O) 630.717.5957 (F)
IL STATE CERTIFICATE OF AUTHORITY

M.E.P.F.P.
CONSOLIDATED CONSULTING ENGINEERS
224 SOUTH MILWAUKEE AVENUE, SUITE E
WHEELING, ILLINOIS, 60090
847.215.8690 (O)
IL STATE CERTIFICATE OF AUTHORITY

ISSUANCE		
NO	DATE	DESCRIPTION
1	06/27/2025	BP 1: ISSUED FOR BID
2	07/18/2025	REVISION 1
3	09/12/2025	BP 2: ISSUED FOR BID & PERMIT

NORTHBROOK FIRE STATION 11
VILLAGE OF NORTHBROOK
820 DUNDEE ROAD, NORTHBROOK, IL

BP2: ISSUED FOR BID & PERMIT

SITE DEMOTION PLAN

SHEET NO.
C1.1

JOB NO. 25-4186.01

© 2025 FGM Architects Inc.

EEA – P:\24192 – FGMA – Northbrook Fire Station 11\Drawings\Northbrook Fire Station 11 Site Plan.dwg
Plotted: 9/10/25 @ 8:03pm By: tbrown

LEGEND

EXISTING		PROPOSED
	Manhole	
	Drainage Structure	
	Drainage Structure	
	Area Drain	
	Clean Out	
	Flared End Section	
	Storm Sewer	
	Underdrain	
	Sanitary Sewer	
	Combined Sewer	
	Water Main	
	Gas Line	
	Overhead Wires	
	Electrical Cable (Buried)	
	Telephone Line	
	Fire Hydrant	
	Valve Vault	
	Buffalo Box	
	Downspout	
	Bollard	
	Gas Valve	
	Gas Meter	
	Electric Meter	
	Electric Manhole	
	Hand Hole	

EXISTING		PROPOSED
	Light Pole	
	Light Pole w/ Mast Arm	
	Utility Pole	
	Telephone Pedestal	
	Telephone Manhole	
	Sign	
	Fence	
	Accessible Parking Stall	
	Curb & Gutter	
	Depressed Curb	
	Curb Wall	
× C 782.50	Curb Elevation	C 782.50
× G 782.00	Gutter Elevation	G 782.00
× P 783.25	Pavement Elevation	P 783.25
× W 782.10	Sidewalk Elevation	W 782.10
× 784.0	Ground Elevation	784.0
× T/W 785.20	Top of Retaining Wall Elevation	T/W 785.20
	Swale	
781	Contour Line	781
	Deciduous Tree	
	Coniferous Tree	
	Brushline	
	Tree Protection Fencing at Drip Line	

GENERAL NOTES

1. The Location of Existing Underground Utilities, Such As Watermains, Sewers, Gas Lines, Etc., As Shown On The Plans, Has Been Determined From The Best Available Information and Is Given For The Convenience of The Contractor. However, The Owner and The Engineer Do Not Assume Responsibility In The Event That During Construction, Utilities Other Than Those Shown May Be Encountered, and That The Actual Location of Those Which Are Shown May Be Different From The Location As Shown On The Drawings. Contact Engineer Immediately If Surface and/or Subsurface Features Are Different Than Shown On The Drawings.
2. Notify The Engineer Without Delay of Any Discrepancies Between the Drawings and Existing Field Conditions.
3. Contractor Shall Provide Private Utility Locating Services for the Project Area.
4. Notify The Owner, Engineer and The Village of Northbrook a Minimum of 48 Hours In Advance of Performing Any Work.
5. All Areas, On or Off Site, Disturbed During Construction Operations and Not Part of the Work As Shown Hereon Shall Be Restored To Original Condition to the Satisfaction of the Owner at No Additional Cost to the Owner. It is Incumbent Upon Contractor to Show That Damaged Areas Were Not Disturbed By Construction Operations.
6. These Drawings Assume That The Contractor Will Utilize An Electronic Drawing File (DWG) to Stake All Site Improvements Accordingly. Contractor Shall Re-Establish Horizontal Control. Horizontal Control Points Not Provided.
7. No Person May Utilize The Information Contained Within These Drawings Without Written Approval From Eriksson Engineering Associates, Ltd.
8. The Engineer is Furnishing These Drawings For Construction Purposes As A Convenience To The Owner, Architect, Surveyor, or Contractor. Prior To The Use Of These Drawings For Construction Purposes, The User Of This Media Shall Verify All Dimensions And Locations Of Buildings With The Foundation Drawings And Architectural Site Plan, and Coordinate All Dimensions and Locations of All Site Items. If Conflicts Exist The User Of This Information Shall Contact The Engineer Immediately.
9. Provide An As-built Survey Prepared By A Licensed Professional Land Surveyor In Accordance With The Authorities Having Jurisdiction Which Shall Include As a Minimum All Detention Basins and Best Management Practices, Include All Storm and Sanitary Sewers, Structure Locations, Sizes, Rim and Invert Elevations, Final Detention Volume Calculations For The Basin(s), Watermain and Valve and Appurtenance Locations. Provide Photograph Of Restrictor Plate(s) Including Ruler Across Opening For Verification Of Restrictor Diameter.
10. The Illinois Department Of Transportation Standard Specifications For Road And Bridge Construction Latest Edition, And All Addenda Thereto, Shall Govern The Earthwork And Paving Work Under This Contract Unless Noted Otherwise.

GEOMETRY NOTES

1. All Dimensions Contained Herein Reference Back Of Curb, Face Of Retaining Wall, Edge Of Pavement, Center of Structure And Outside Face Of Building Foundation Unless Otherwise Noted.
2. All Pavement Striping Shall Be 4" Wide Yellow Paint Per Specifications, Two Coats for Latex Paints. All Cross Hatch Striping Shall Be 45° At 2'-0" Centers.
3. All Accessible Parking Signs (R7-8) Must Be Placed at the Center of the Space and Within 5 Feet of the Space.
4. Refer to Architectural Drawings for Exact Locations of All Buildings.
5. Refer to Architectural Drawings for Locations and Details of All Permanent Site Fencing.
6. Traffic Sign Posts Shall Be Breakaway Green U-Channel Posts, 2-lb/ft, 11 Gauge Steel, Embedded 42" Minimum into Ground.

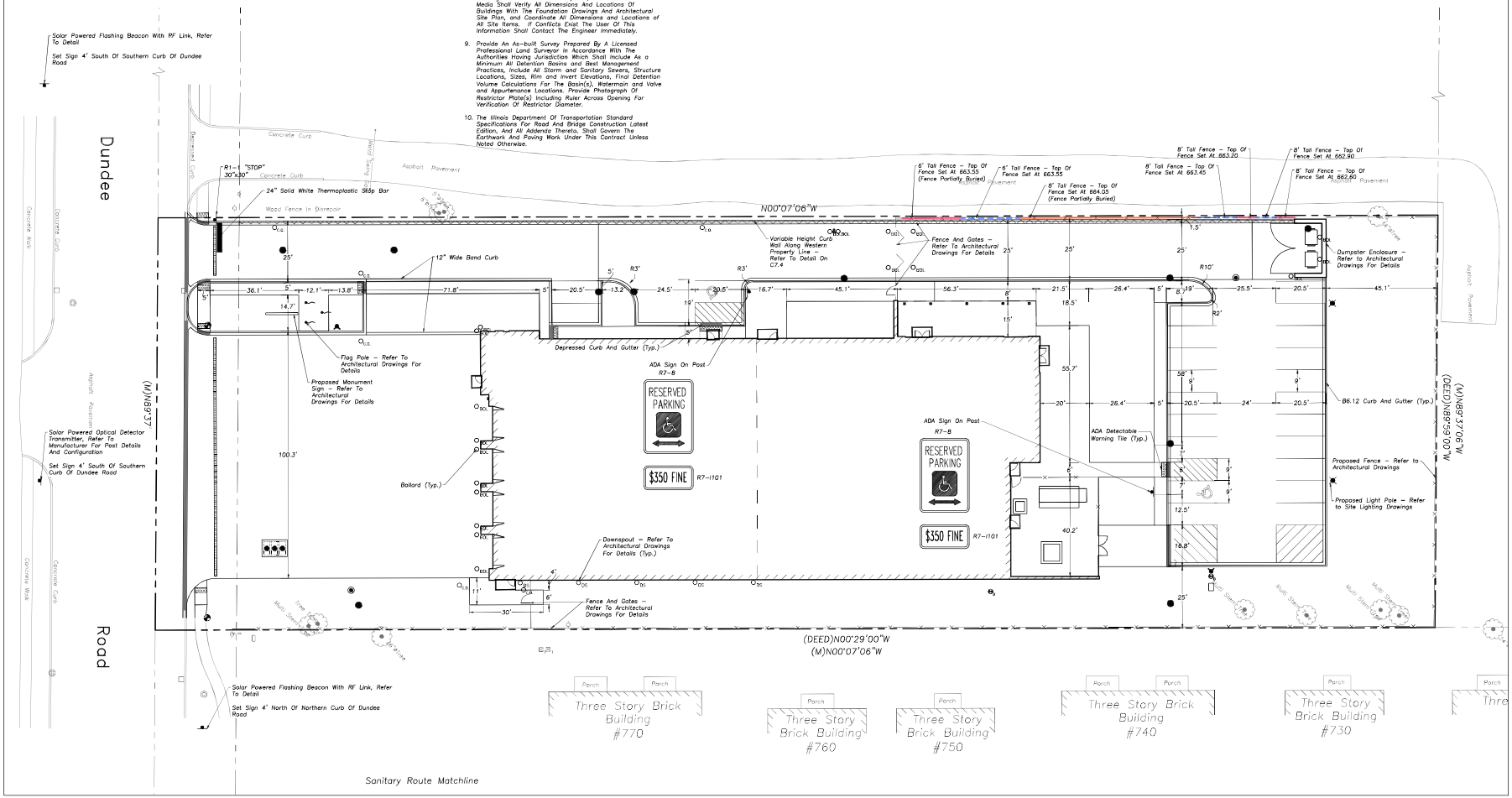

Scale: 1"=20'

fgma
FGMA ARCHITECTS
FGM Architects
1 Westbrook Corporate Center
Suite 1000
Westchester, Illinois 60154
630.574.8300 OFFICE
ILLINOIS PROFESSIONAL DESIGN FIRM #184-001510

CIVIL & LANDSCAPE
ERIKSSON ENGINEERING ASSOCIATES, LTD.
145 COMMERCE DRIVE, SUITE A
GRAYSLAKE, ILLINOIS, 60030
847.223.4804 (O)
IL STATE CERTIFICATE OF AUTHORITY

STRUCTURAL
McCLUSKEY ENGINEERING CORPORATION
1387 HIGH GROVE LANE
NAPERVILLE, ILLINOIS, 60540
630.717.5359 (O) 630.717.5707 (F)
IL STATE CERTIFICATE OF AUTHORITY

M.E.P.F.P.
CONSOLIDATED CONSULTING ENGINEERS
224 SOUTH MILWAUKEE AVENUE, SUITE E
WHEELING, ILLINOIS, 60090
847.215.0690 (O)
IL STATE CERTIFICATE OF AUTHORITY

ISSUANCE		
NO	DATE	DESCRIPTION
1	06/27/2025	BP 1: ISSUED FOR BID
2	07/18/2025	REVISION 1
3	09/12/2025	BP 2: ISSUED FOR BID & PERMIT

NORTHBROOK FIRE STATION 11
VILLAGE OF NORTHBROOK
820 DUNDEE ROAD, NORTHBROOK, IL

BP2: ISSUED FOR BID & PERMIT

SITE GEOMETRY PLAN

SHEET NO.
C2.1

JOB NO. 25-4186.01

© 2025 FGM Architects Inc.

EEA – P:\24192 – FGMA – Northbrook Fire Station 11\Drawings\Northbrook Fire Station 11 Site Plan.dwg
Plotted: 9/10/25 @ 8:04am By: tbrown

LEGEND

EXISTING	PROPOSED
Manhole	
Drainage Structure	
Drainage Structure	
Area Drain	
Clean Out	CO
Flared End Section	
Storm Sewer	
Underdrain	
Sanitary Sewer	
MWRD Interceptor	
Water Main	W
Gas Line	G
Overhead Wires	OH
Electrical Cable (Buried)	E
Telephone Line	T
Fire Hydrant	
Valve Vault	
Buffalo Box	
Downspout	DS
Bollard	BOL
Gas Valve	
Gas Meter	
Electric Meter	
Electric Manhole	
Hand Hole	

EXISTING	PROPOSED
Light Pole	
Light Pole w/ Mast Arm	
Utility Pole	
Telephone Pedestal	
Telephone Manhole	
Sign	
Fence	
Accessible Parking Stall	
Curb & Gutter	
Depressed Curb	
Curb Wall	
Curb Elevation	C 782.50
Gutter Elevation	G 782.00
Pavement Elevation	P 783.25
Sidewalk Elevation	W 782.10
Ground Elevation	784.0
Top of Retaining Wall Elevation	T/W 785.20
Swale	
Contour Line	781
Deciduous Tree	
Coniferous Tree	
Brushline	
Tree Protection Fencing at Drip Line	

GENERAL NOTES

1. The Location of Existing Underground Utilities, Such As Watermains, Sewers, Gas Lines, Etc., As Shown On The Plans, Has Been Determined From The Best Available Information and Is Given For The Convenience of The Contractor. However, The Owner and The Engineer Do Not Assume Responsibility In The Event That During Construction, Utilities Other Than Those Shown May Be Encountered, and That The Actual Location of Those Which Are Shown May Be Different From The Location As Shown On The Drawings. Contact Engineer Immediately If Surface and/or Subsurface Features Are Different Than Shown On The Drawings.
2. Notify The Engineer Without Delay of Any Discrepancies Between the Drawings and Existing Field Conditions.
3. Contractor Shall Provide Private Utility Locating Services for the Project Area.
4. Notify The Owner, Engineer and The Village of Northbrook a Minimum of 48 Hours In Advance of Performing Any Work.
5. All Areas, On or Off Site, Disturbed During Construction Operations and Not Part of the Work As Shown Hereon Shall Be Restored To Original Condition to the Satisfaction of the Owner at No Additional Cost to the Owner. It Is Incumbent Upon Contractor to Show That Damaged Areas Were Not Disturbed By Construction Operations.
6. These Drawings Assume That The Contractor Will Utilize An Electronic Drawing File (DWG) to Stake All Site Improvements Accordingly. Contractor Shall Re-Establish Horizontal Control. Horizontal Control Points Not Provided.
7. No Person May Utilize The Information Contained Within These Drawings Without Written Approval From Eriksson Engineering Associates, Ltd.
8. The Engineer is Furnishing These Drawings For Construction Purposes As A Convenience To The Owner, Architect, Surveyor, or Contractor. Prior To The Use Of These Drawings For Construction Purposes, The User Of This Media Shall Verify All Dimensions And Locations Of Buildings With The Foundation Drawings And Architectural Site Plan, and Coordinate All Dimensions and Locations of All Site Items. If Conflicts Exist The User Of This Information Shall Contact The Engineer Immediately.
9. Provide An As-built Survey Prepared By A Licensed Professional Land Surveyor In Accordance With The Authorities Having Jurisdiction Which Shall Include As a Minimum All Detention Basins and Best Management Practices, Include All Storm and Sanitary Sewers, Structure Locations, Sizes, Rim and Invert Elevations, Final Detention Volume Calculations For The Basin(s), Watermain and Valve and Appurtenance Locations. Provide Photograph Of Restrictor Plate(s) Including Ruler Across Opening For Verification Of Restrictor Diameter.
10. The Illinois Department Of Transportation Standard Specifications For Road And Bridge Construction Latest Edition, And All Addenda Thereto, Shall Govern The Earthwork And Paving Work Under This Contract Unless Noted Otherwise.

UTILITY NOTES

1. This Project Is Located In A Separate Sewer Area.
2. Utility Service Lines as Shown Hereon are Approximate. Coordinate The Exact Locations With The Plumbing Drawings. Coordinate The Locations With The Plumbing Contractor and/or the Owner's Construction Representative Prior to Installation of Any New Utilities.
3. Refer to Plumbing Drawings for Continuation of All Utilities Within 5 Feet of Building Face.
4. Field Verify Invert & Locations of Existing Utility Mains Prior to Installing Any On-Site Utilities or Structures. All Elevations and Inverts Referencing Said Utility Shall Be Field Verified Prior To Installation Of Any New Structures Or Utilities, and Adjustments Shall Be Made as Necessary. Contact Engineer Prior to Installation if Discrepancy Exists With These Drawings.
5. Coordinate the Relocation Of Any Utilities Encountered And Replacement Of Any Utilities Damaged Within Influence Zone Of New Construction. Contact Engineer If The Existing Utilities Vary Appreciably From The Plans.
6. All Water Main and Services Shall Be Installed at a Minimum Depth of 5.5' From Top of Finished Ground Elevation to Top of Main.
7. Protection Of Water Supplies Shall Be As Described In Section 370.350 Of The Illinois Recommended Standards For Sewage Works Or Section 41-2.01 Of The Standard Specifications For Water and Sewer Main Construction in Illinois, Latest Edition.
8. Clean Out All Existing and Proposed Storm Inlets and Catch Basins at the Completion of Construction.
9. The "Standard Specifications for Water and Sewer Main Construction in Illinois", Current Edition Shall Govern Work Where Applicable.
10. Adjust Frame Elevations Of All Structures Located Within The Limits Of The Project To Match Proposed Elevations. Add Or Remove Adjusting Rings As Necessary And Install New Mortar At Rings And Frame. Install New Chimney Seals On Any Sanitary Structures Being Adjusted.
11. Obtain As-Built Information For All Pipes, In Accordance With As-Built Document Requirements, Prior To The Installation Of Any Inlet Hoods Or Trash Racks.

STRUCTURE NOTES

1. All Catch Basins to Be Installed in Paved Areas Shall Have Neenah R2504-D Frame & Grate or Approved Equal.
2. All Catch Basins to Be Installed In Landscaped Areas Shall Have Neenah R4340-B / R2504-D Frame & Grate or Approved Equal. For Cone Sections Install a Minimum of 4" Grade Rings For Topsoil Respread. For Flat Slab Tops Install the Following Minimum Height of Grade Rings:
   - 4" Diameter Structure- 4"
   - 5" Diameter Structure- 6"
   - 6" Diameter Structure- 8"
3. All Catch Basins to Be Installed Along Curb and Gutter (B-6.12) Shall Have Neenah R3281-A Frame & Grate or Approved Equal.
4. All Catch Basins to Be Installed Along Depressed Curb and Gutter (Dep B-6.12) Shall Have East Jordan Iron Works 5120 Catch Basin Inlet Frame and Grate, or Approved Equal.
5. Where Structures are Shown Along the Curbline, Unless Specifically Stated Otherwise, it is Intended That the Frame of the Structure is To Fall Within the Flowline Of The Gutter or at the Pavement Edge Where No Gutter Exists.
6. All Manholes Shall Have Neenah R1713-B Frame & Closed Lid or Approved Equal, with "Storm" or "Sanitary" Imprinted as Appropriate.
7. For All Structures Indicated to be Adjusted, Remove and Install Adjusting Rings, Cone Section, Barrel Sections, or Flat Slab Top as Necessary.
8. All Flared End Sections 12" and Larger Shall Include an IDOT Standard Grate.
9. All Flared End Sections Shall Be Concrete.
10. All Sanitary Manholes Shall Include a Chimney Seal.

MWRD NOTES

1. The MWRD Shall Have 24 Hour-A-Day Unrestricted Access To All MWMRD Structures/Sewers/Facilities.
2. No Debris Shall Enter MWRD Structures/Sewers/Facilities/ Waterways.
3. All Access Hatches/Manhole Covers On MWRD Structures/ Manholes Within The Project Area Shall Not Be Buried/ Covered.

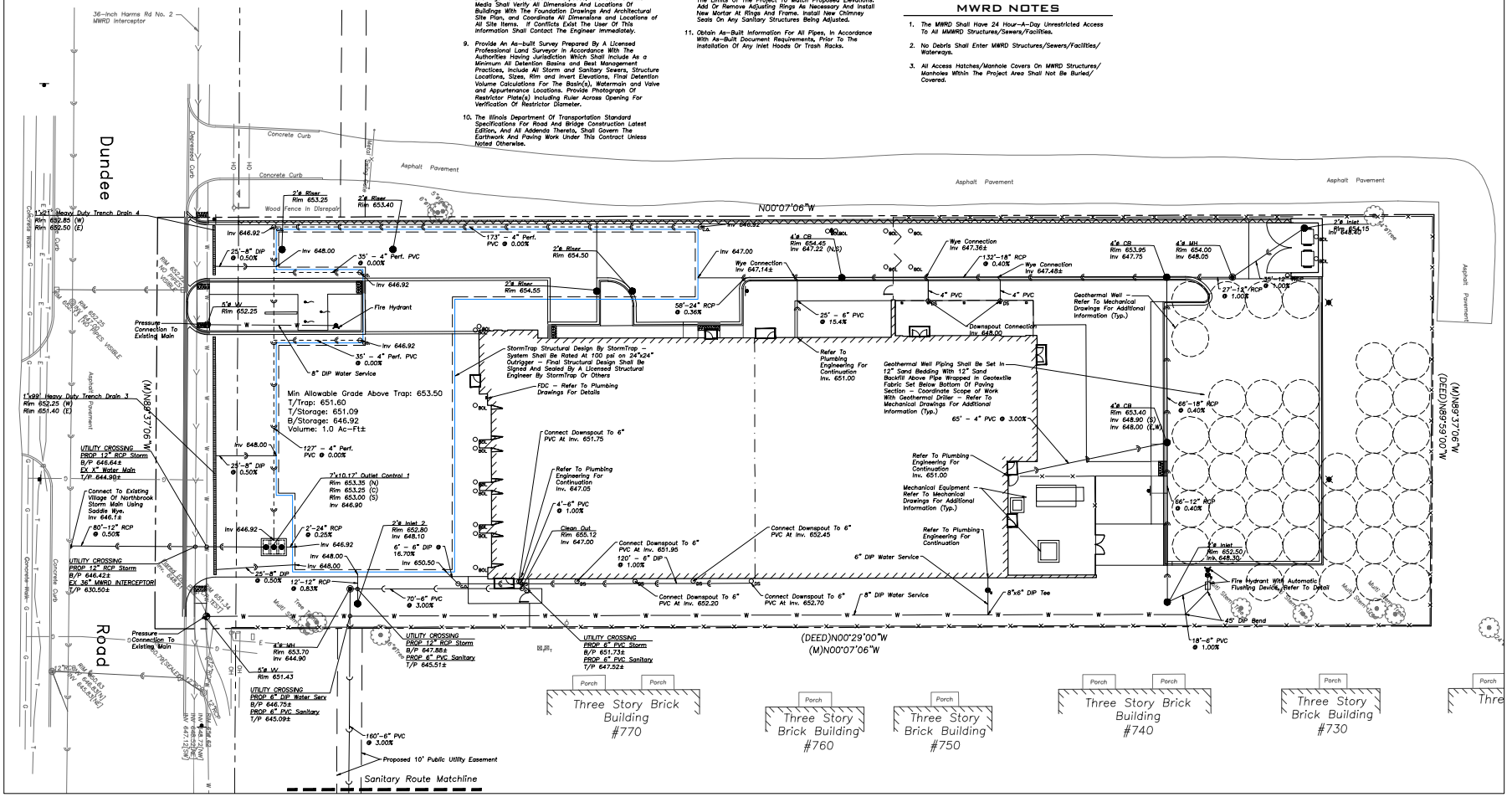

fgma
FGMA ARCHITECTS
FGM Architects
1 Westbrook Corporate Center
Suite 1000
Westchester, Illinois 60154
630.574.8300 OFFICE
ILLINOIS PROFESSIONAL DESIGN FIRM #184.005592

CIVIL & LANDSCAPE
ERIKSSON ENGINEERING ASSOCIATES, LTD.
181 CHANTREE DRIVE, SUITE A
GRAYSLAKE, ILLINOIS, 60030
847.223.4804 (O)
IL STATE CERTIFICATE OF AUTHORITY

STRUCTURAL
McCLUSKEY ENGINEERING CORPORATION
1387 HIGH GROVE LANE
NAPERVILLE, ILLINOIS, 60540
630.717.5999 (O) 630.717.5957 (F)
IL STATE CERTIFICATE OF AUTHORITY

M.E.P.F.P.
CONSOLIDATED CONSULTING ENGINEERS
224 SOUTH MILWAUKEE AVENUE, SUITE E
WHEELING, ILLINOIS, 60090
847.215.8690 (O)
IL STATE CERTIFICATE OF AUTHORITY

ISSUANCE		
NO	DATE	DESCRIPTION
1	06/27/2025	BP 1: ISSUED FOR BID
2	07/18/2025	REVISION 1
3	09/12/2025	BP 2: ISSUED FOR BID & PERMIT

NORTHBROOK FIRE STATION 11
VILLAGE OF NORTHBROOK
820 DUNDEE ROAD, NORTHBROOK, IL

BP2: ISSUED FOR BID & PERMIT

SITE UTILITY PLAN

SHEET NO.
C3.1

JOB NO. 25-4186.01

© 2025 FGM Architects Inc.

EEA – \\EEA-NAS\Projects\24192 – FGMA – Northbrook Fire Station 11\Drawings\Northbrook Fire Station 11 Site Plan.dwg
Plotted: 9/23/25 @ 12:49pm By: mhart

LEGEND

EXISTING		PROPOSED
	Manhole	
	Drainage Structure	
	Drainage Structure	
	Area Drain	
	Clean Out	
	Flared End Section	
	Storm Sewer	
	Underdrain	
	Sanitary Sewer	
	Combined Sewer	
	Water Main	
	Gas Line	
	Overhead Wires	
	Electrical Cable (Buried)	
	Telephone Line	
	Fire Hydrant	
	Valve Vault	
	Buffalo Box	
	Downspout	
	Bollard	
	Gas Valve	
	Gas Meter	
	Electric Meter	
	Electric Manhole	
	Hand Hole	

EXISTING		PROPOSED
	Light Pole	
	Light Pole w/ Mast Arm	
	Utility Pole	
	Telephone Pedestal	
	Telephone Manhole	
	Sign	
	Fence	
	Accessible Parking Stall	
	Curb & Gutter	
	Depressed Curb	
	Curb Wall	
C 782.50	Curb Elevation	C 782.50
G 782.00	Gutter Elevation	G 782.00
P 783.25	Pavement Elevation	P 783.25
W 782.10	Sidewalk Elevation	W 782.10
784.0	Ground Elevation	784.0
T/W 785.20	Top of Retaining Wall Elevation	T/W 785.20
	Swale	
781	Contour Line	781
	Deciduous Tree	
	Coniferous Tree	
	Brushline	
	Tree Protection Fencing at Drip Line	

GENERAL NOTES

1. The Location of Existing Underground Utilities, Such As Watermains, Sewers, Gas Lines, Etc., As Shown On The Plans, Has Been Determined From The Best Available Information and Is Given For The Convenience of The Contractor. However, The Owner and The Engineer Do Not Assume Responsibility In The Event That During Construction, Utilities Other Than Those Shown May Be Encountered, and That The Actual Location of Those Which Are Shown May Be Different From The Location As Shown On The Drawings. Contact Engineer Immediately If Surface and/or Subsurface Features Are Different Than Shown On The Drawings.
2. Notify The Engineer Without Delay of Any Discrepancies Between the Drawings and Existing Field Conditions.
3. Contractor Shall Provide Private Utility Locating Services for the Project Area.
4. Notify The Owner, Engineer and The Village of Northbrook a Minimum of 48 Hours In Advance of Performing Any Work.
5. All Areas, On or Off Site, Disturbed During Construction Operations and Not Part of the Work As Shown Hereon Shall Be Restored To Original Condition to the Satisfaction of the Owner at No Additional Cost to the Owner. It is Incumbent Upon Contractor to Show That Damaged Areas Were Not Disturbed By Construction Operations.
6. These Drawings Assume That The Contractor Will Utilize An Electronic Drawing File (DWG) to Stake All Site Improvements Accordingly. Contractor Shall Re-Establish Horizontal Control. Horizontal Control Points Not Provided.
7. No Person May Utilize The Information Contained Within These Drawings Without Written Approval From Eriksson Engineering Associates, Ltd.
8. The Engineer is Furnishing These Drawings For Construction Purposes As A Convenience To The Owner, Architect, Surveyor, or Contractor. Prior To The Use Of These Drawings For Construction Purposes, The User Of This Media Shall Verify All Dimensions And Locations Of Buildings With The Foundation Drawings And Architectural Site Plan, and Coordinate All Dimensions and Locations of All Site Items. If Conflicts Exist The User Of This Information Shall Contact The Engineer Immediately.
9. Provide An As-built Survey Prepared By A Licensed Professional Land Surveyor In Accordance With The Authorities Having Jurisdiction Which Shall Include As a Minimum All Detention Basins and Best Management Practices, Include All Storm and Sanitary Sewers, Structure Locations, Sizes, Rim and Invert Elevations, Final Detention Volume Calculations For The Basin(s), Watermain and Valve and Appurtenance Locations. Provide Photograph Of Restrictor Plate(s) Including Ruler Across Opening For Verification Of Restrictor Diameter.
10. The Illinois Department Of Transportation Standard Specifications For Road And Bridge Construction Latest Edition, And All Addenda Thereto, Shall Govern The Earthwork And Paving Work Under This Contract Unless Noted Otherwise.

PAVING & SURFACE LEGEND

Asphalt Pavement Section
1 1/2" Hot Mix Asphalt,Mix D, IL-9.5, N50
2 1/2" Hot Mix Asphalt, IL-19.0, N50
Prime Coat (0.25 gal/sq yd)
8" Aggregate Base Course, Type B, Crushed, CA-6
Non-Woven Geotextile Fabric, 5 oz/sy

Concrete Driveway Section
8" Portland Cement Concrete
Curing and Sealing Compound
6"x6" W2.9xW2.9 Welded Wire Fabric
6" Aggregate Base Course, Type B, Crushed

Pigmented Concrete Driveway Section
8" Portland Cement Concrete
Pigment Additive – Color As Selected By Architect/Owner
Curing and Sealing Compound
6"x6" W2.9xW2.9 Welded Wire Fabric
6" Aggregate Base Course, Type B, Crushed

IDOT Patch Section*
1 1/2" Hot Mix Asphalt,Mix D, IL-9.5, N90
2" Hot Mix Asphalt, IL-19.0, N70
Prime Coat (0.25 gal/sq yd)
10" Portland Cement Concrete
4" Aggregate Base Course, Type B, Crushed
*Thicknesses Shown Are Min. Contractor To Match Existing If Thicker
*Mixes To Be IDOT Approved

Concrete Sidewalk Section
Curing and Sealing Compound
5" Portland Cement Concrete
6"x6" W1.4xW1.4 Welded Wire Fabric
4" Aggregate Base Course, Type B, Crushed

Heavy-Duty Asphalt Pavement Section
1 1/2" Hot Mix Asphalt,Mix D, IL-9.5, N50
3 1/2" Hot Mix Asphalt, IL-19.0, N50
Prime Coat (0.25 gal/sq yd)
10" Aggregate Base Course, Type B, Crushed, CA-6
Non-Woven Geotextile Fabric, 8 oz

Extents of Snow Melt System
(See Mechanical Drawings For Details)
Snow Melt Tubing Tied To Reinforcement In Concrete (Refer To Mechanical Drawings)
±2" Insulation Board Between Stone And Concrete (Refer To Mechanical Drawings)

Stormwater Overland Flow Path

Ridge Line/High Point

Curb Wall With Exposed Back Of Curb

GRADING NOTES

1. The Grading and Construction of Proposed Improvements Shall Be Done in A Manner Which Will Allow For Positive Drainage, and Not Cause Ponding of Stormwater on the Surface of Proposed Improvements.
2. All Landscaped Areas Disturbed By Construction Shall Be Respread With 6 Inches (Min.) to 12 Inches (Max.) Topsoil and Hydroseeded Unless Noted Otherwise On The Landscape Drawings.
3. Refer to Architectural Drawings for Locations and Patterns of Expansion and Control Joints in Concrete Pavement and Sidewalks.
4. Accessible Parking Spaces and Loading Spaces Shall Be Sloped at Maximum 2.0% in Any Direction. Maximum Sidewalk Cross Slopes Shall be 2.0%. Maximum Longitudinal Sidewalk Slope Shall Be 4.9%. Contact Engineer if Conflicts Exist.
5. Adjust Frame Elevations Of All Structures Located Within The Limits Of The Project To Match Proposed Elevations. Add Or Remove Adjusting Rings As Necessary And Install New Mortar At Rings And Frame. Install New Chimney Seals On Any Sanitary Structures Being Adjusted
6. Conditions May Require Contractor to Excavate Clay Borrow Pit in Order to Produce Suitable Fill Material for Building Pad Preparation or Site Paving. Borrow Pit Shall Not Be Located in Proposed Hardscape Areas. Contractor Shall Backfill Borrow Pit to Meet Proposed Grades, or Existing Grades in Otherwise Undisturbed Areas, and May Use Topsoil and Unsuitable Material to Backfill. Review Soil Studies Prior to Excavation.

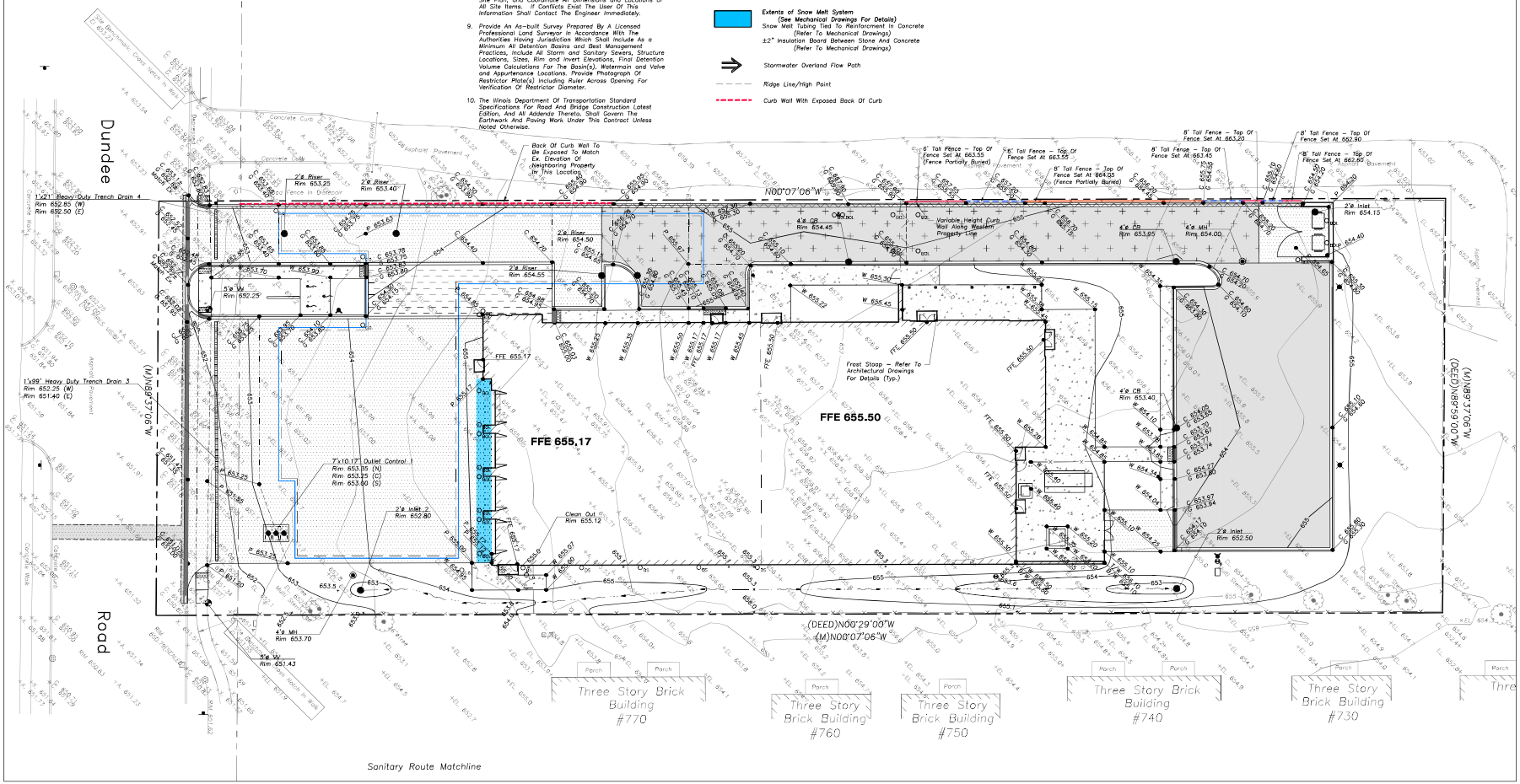

Scale: 1"=20'

fgma
FGMA ARCHITECTS
FGM Architects
1 Westbrook Corporate Center
Suite 1000
Westchester, Illinois 60154
630.574.8300 OFFICE
ILLINOIS PROFESSIONAL DESIGN FIRM #184-001930

CIVIL & LANDSCAPE
ERIKSSON ENGINEERING ASSOCIATES, LTD.
145 COMMERCE DRIVE, SUITE A
GRAYSLAKE, ILLINOIS, 60030
847.223.4804 (O)
IL STATE CERTIFICATE OF AUTHORITY

STRUCTURAL
McCLUSKEY ENGINEERING CORPORATION
1387 HIGH GROVE LANE
NAPERVILLE, ILLINOIS, 60540
630.717.5389 (O) 630.717.5397 (F)
IL STATE CERTIFICATE OF AUTHORITY

M.E.P.FP.
CONSOLIDATED CONSULTING ENGINEERS
224 SOUTH MILWAUKEE AVENUE, SUITE E
WHEELING, ILLINOIS, 60090
847.215.0690 (O)
IL STATE CERTIFICATE OF AUTHORITY

ISSUANCE		
NO	DATE	DESCRIPTION
1	06/27/2025	BP 1: ISSUED FOR BID
2	07/18/2025	REVISION 1
3	09/12/2025	BP 2: ISSUED FOR BID & PERMIT

NORTHBROOK FIRE STATION 11
VILLAGE OF NORTHBROOK
820 DUNDEE ROAD, NORTHBROOK, IL

BP2: ISSUED FOR BID & PERMIT

SITE GRADING AND PAVING PLAN

SHEET NO.
C4.1

JOB NO. 25-4186.01

© 2025 FGM Architects Inc.

EEA – P:\24192 – FGMA – Northbrook Fire Station 11\Drawings\Northbrook Fire Station 11 Site Plan.dwg
Plotted: 9/10/25 @ 8:05pm By: tbrown

LANDSCAPE NOTES:

1. PLANT QUANTITIES SHOWN IN THE PLANT SCHEDULE ARE FOR CONVENIENCE ONLY. THE CONTRACTOR IS RESPONSIBLE FOR PROVIDING AND INSTALLING ALL MATERIALS SHOWN ON THE PLAN AND SHOULD NOT RELY ON THE PLANT SCHEDULE FOR DETERMINING QUANTITIES.
2. ALL PLANT MATERIALS SHALL BE NURSERY GROWN STOCK AND SHALL BE FREE FROM ANY DEFORMITIES, DISEASES OR INSECT DAMAGE. ANY MATERIALS WITH DAMAGED OR CROOKED/DISFIGURED LEADERS, BARK ABRASION, SUNSCALD, INSECT DAMAGE, ETC. ARE NOT ACCEPTABLE AND WILL BE REJECTED. TREES WITH MULTIPLE LEADERS WILL BE REJECTED UNLESS CALLED OUT IN THE PLANT SCHEDULE AS MULTI-STEM. NO PRUNING TO BE DONE AT THE TIME OF INSTALLATION EXCEPT FOR DEAD OR BROKEN LIMBS.
3. ALL LANDSCAPE IMPROVEMENTS SHALL MEET MUNICIPALITY REQUIREMENTS AND GUIDELINES, WHICH SHALL BE VERIFIED BY MUNICIPAL AUTHORITIES.
4. ALL PLANTING OPERATIONS SHALL BE COMPLETED IN ACCORDANCE WITH STANDARD HORTICULTURAL PRACTICES. THIS MAY INCLUDE, BUT NOT BE LIMITED TO, PROPER PLANTING BED AND TREE PIT PREPARATION, PLANTING MIX, PRUNING, STAKING AND GUYING, WRAPPING, SPRAYING, FERTILIZATION, PLANTING AND ADEQUATE MAINTENANCE OF MATERIALS DURING CONSTRUCTION ACTIVITIES.
5. ALL PLANT MATERIALS SHALL BE INSPECTED AND APPROVED BY THE LANDSCAPE ARCHITECT PRIOR TO INSTALLATION. ANY MATERIALS INSTALLED WITHOUT APPROVAL MAY BE REJECTED.
6. THE CONTRACTOR SHALL GUARANTEE PLANT MATERIALS FOR A PERIOD OF ONE YEAR FROM DATE OF ACCEPTANCE BY OWNER. THE CONTRACTOR SHALL OUTLINE PROPER MAINTENANCE PROCEDURES TO THE OWNER AT THE TIME OF ACCEPTANCE. DURING THE GUARANTEE PERIOD, DEAD OR DISEASED MATERIALS SHALL BE REPLACED AT NO COST TO THE OWNER. AT THE END OF THE GUARANTEE PERIOD THE CONTRACTOR SHALL OBTAIN FINAL ACCEPTANCE FROM THE OWNER.
7. ANY EXISTING TREES TO BE RETAINED SHALL BE PROTECTED FROM SOIL COMPACTION AND OTHER DAMAGES THAT MAY OCCUR DURING CONSTRUCTION ACTIVITIES BY ERECTING FENCING AROUND SUCH MATERIALS THE DRIP LINE OF THE TREE TO BE PROTECTED UNLESS SPECIFIED OTHERWISE.
8. ALL GRASS, CLUMPS, OTHER VEGETATION, DEBRIS, STONES, ETC.. SHALL BE RAKED OR OTHERWISE REMOVED FROM PLANTING AND LAWN AREAS PRIOR TO INITIATION OF INSTALLATION PROCEDURES.
9. THE CONTRACTOR SHALL VERIFY THE LOCATIONS OF ALL UNDERGROUND UTILITIES PRIOR TO INITIATING PLANTING OPERATIONS. THE CONTRACTOR SHALL REPAIR/ REPLACE ANY UTILITY, PAVING, CURBING, ETC.. WHICH IS DAMAGED DURING PLANTING OPERATIONS.
10. SIZE AND GRADING STANDARDS OF PLANT MATERIALS SHALL CONFORM TO THE LATEST EDITION OF ANSI Z60.1, AMERICAN STANDARDS FOR NURSERY STOCK, BY THE AMERICAN NURSERY & LANDSCAPE ASSOCIATION.
11. REFER TO PLAT OF SURVEY FOR LEGAL DESCRIPTION, BOUNDARY DIMENSIONS AND EXISTING CONDITIONS.
12. ALL PLANT MATERIAL ON THIS PLANTING PLAN REPRESENTS THE INTENTION AND INTENSITY OF THE PROPOSED LANDSCAPE MATERIAL. THE EXACT SPECIES AND LOCATIONS MAY VARY IN THE FIELD DO TO MODIFICATIONS IN THE SITE IMPROVEMENTS AND THE AVAILABILITY OF PLANT MATERIAL AT THE TIME OF INSTALLATION. ANY SUCH CHANGES MUST FIRST BE APPROVED BY THE CITY IN WRITING
13. ALL PLANT MATERIAL SHALL BE PLANTED WITH A MINIMUM OF SIX INCHES OF ORGANIC SOIL AND MULCHED WITH A SHREDDED BARK MATERIAL TO A MINIMUM 3" DEPTH.
14. ALL BEDS SHALL BE EDGED, HAVE WEED PREEMERGENTS APPLIED AT THE RECOMMENDED RATE.
15. ALL PARKWAYS SHALL HAVE LAWN ESTABLISHED WITH SEED A GROUNDCOVER, UNLESS OTHERWISE NOTED.
16. ALL LAWN AREAS ON THIS PLAN SHALL BE GRADED SMOOTH AND TOPPED WITH AT LEAST 6" OF TOPSOIL. ALL LAWN AREAS TO BE ESTABLISHED USING SOD, ALL TURF GRASS AREAS ADJACENT TO PAVEMENT OR CURB SHALL BE GRADED FLUSH WITH THAT PAVEMENT AND ALLOW POSITIVE DRAINAGE. ANY SETTLEMENT OF THE TURF GRASS AREAS SHALL BE CORRECTED BY THE LANDSCAPE CONTRACTOR AT THE CONTRACTOR'S EXPENSE PRIOR TO FINAL ACCEPTANCE BY OWNER.
17. THIS LANDSCAPE PLAN ASSUMES THE SITE WILL BE PREPARED WITH TOP SOIL SUITABLE FOR THE ESTABLISHMENT OF THE LANDSCAPE MATERIAL PRESENTED ON THIS PLAN. IF ADDITIONAL TOP SOIL IS REQUIRED IT IS UP TO THE LANDSCAPE CONTRACTOR ON THE PROJECT TO PROVIDE, SPREAD AND PREPARE THE SITE AS NEEDED FOR THE IMPLEMENTATION OF THIS LANDSCAPE PLAN.
18. CONTRACTORS MUST VERIFY ALL QUANTITIES AND OBTAIN ALL PROPER PERMITS AND LICENSES FROM THE PROPER AUTHORITIES.
19. ALL MATERIAL MUST MEET INDUSTRY STANDARDS AND THE LANDSCAPE ARCHITECT HAS THE RIGHT TO REFUSE ANY POOR MATERIAL OR WORKMANSHIP.
20. LANDSCAPE ARCHITECT IS NOT RESPONSIBLE FOR UNSEEN SITE CONDITIONS.
21. ALL PLANTINGS SHALL BE SPACED EQUAL DISTANT, BACK FILLED WITH AMENDED SOIL IN A HOLE TWICE THE ROOTBALL DIAMETER, WATERED, FERTILIZED, PRUNED, AND HAVE ALL TAGS AND ROPES REMOVED.
22. LAWN AND BED AREAS SHALL BE ROTOTILLED, RAKED OF CLUMPS AND DEBRIS.
23. REMOVE ALL DEAD AND DISEASED PLANT MATERIAL FROM SITE AND DISPOSE OF PROPERLY.
24. PLANTS TO BE PLANTED SO THAT ROOT FLARE IS AT THE GRADE OF THE AREA WHERE PLANTED. NO PRUNING TO BE DONE AT THE TIME OF INSTALLATION EXCEPT TO REMOVE DEAD OR BROKEN LIMBS.

PLANT SCHEDULE

SYMBOL	CODE	BOTANICAL / COMMON NAME	COND	SIZE	QTY
CANOPY TREES					
	CEL OCC	CELTIS OCCIDENTALIS / COMMON HACKBERRY	B & B	3" CAL.	4
	LIQ WO3	LIQUIDAMBAR STYRACIFLUA 'WORPLESDON' / WORPLESDON SWEET GUM	B & B	3" CAL.	3
	PLA MO3	PLATANUS X ACERIFOLIA 'MORTON CIRCLE' / EXCLAMATION!™ LONDON PLANE TREE	B & B	3" CAL.	2
	TIL RED	TILIA AMERICANA 'REDMOND' / REDMOND AMERICAN LINDEN	B & B	3" CAL.	2
	ULM ACC	ULMUS X 'ACCOLADE' / ACCOLADE ELM	B & B	3" CAL.	4
EVERGREEN TREES					
	PIC ABI	PICEA ABIES / NORWAY SPRUCE	B & B	6' HT.	6
	PIN STR	PINUS STROBUS / WHITE PINE	B & B	6' HT.	18
UNDERSTORY TREES					
	AME GRA	AMELANCHIER X GRANDIFLORA 'AUTUMN BRILLIANCE' / AUTUMN BRILLIANCE APPLE SERVICEBERRY	B & B	8' CLUMP	4

SYMBOL	CODE	BOTANICAL / COMMON NAME	COND.	SIZE	QTY
DECIDUOUS SHRUBS					
	ARO ARB	ARONIA ARBUTIFOLIA / RED CHOKEBERRY	B & B	38" HT.	12
	COR AME	CORYLUS AMERICANA / AMERICAN HAZELNUT	CONT.	36" HT.	9
	RHU GRO	RHUS AROMATICA 'GRO-LOW' / GRO-LOW FRAGRANT SUMAC	CONT.	#5	8
	ROS FL3	ROSA X 'FLOWER CARPET CORAL' / ROSE	CONT.	24" SPREAD	7
	SYR BL2	SYRINGA X 'BLOOMERANG' / BLOOMERANG LILAC	B & B	38" HT.	28
EVERGREEN SHRUBS					
	JUN PFI	JUNIPERUS CHINENSIS 'KALLAYS COMPACT' / KALLAY COMPACT PFITZER JUNIPER	B & B	24" SPREAD	18
	JUN HUG	JUNIPERUS HORIZONTALIS 'HUGHES' / HUGHES JUNIPER	B & B	24" SPREAD	8
	TAX DE4	TAXUS X MEDIA / DENSE YEW	B & B	38" HT.	16
	THU SMA	THUJA OCCIDENTALIS 'SMARAGD' / EMERALD GREEN ARBORVITAE	B & B	6' HT.	14

SYMBOL	CODE	BOTANICAL / COMMON NAME	COND	SIZE	QTY
PERENNIALS					
	HEM OR2	HEMEROCALLIS X 'STELLA DE ORO' / STELLA DE ORO DAYLILY	CONT.	#1	23
	NEP WAL	NEPETA X FAASSENII 'WALKERS LOW' / WALKERS LOW CATMINT	CONT.	QUART	25
TURF GRASS					
	TUR BLU	TURF SOD BLUEGRASS / KENTUCKY BLUEGRASS	ROLLED	SOD	28,243 SF

SITE MATERIALS SCHEDULE

	MULCH	1,683 SF

20' 0' 20' 40' 60'

Scale: 1"= 20'

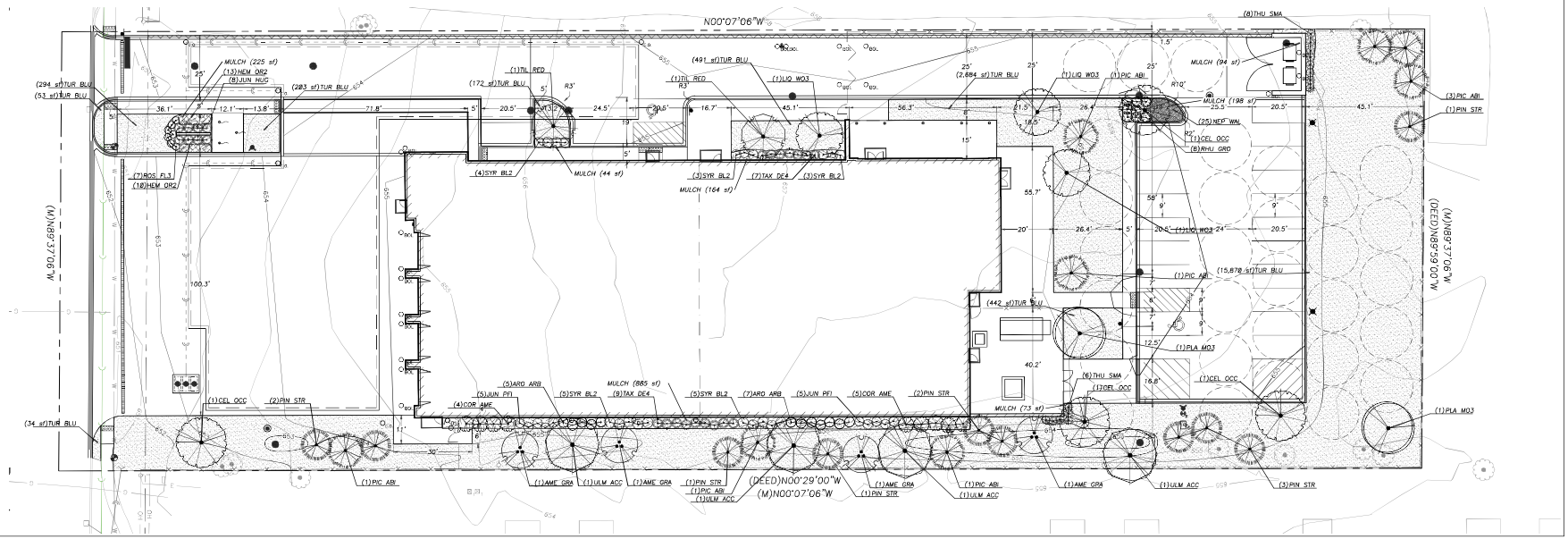

fgma
FGMA ARCHITECTS
FGM Architects
1 Westbrook Corporate Center
Suite 1000
Westchester, Illinois 60154
630.574.8300 OFFICE
ILLINOIS PROFESSIONAL DESIGN FIRM #184.005880

CIVIL & LANDSCAPE
ERIKSSON ENGINEERING ASSOCIATES, LTD.
145 COMMERCE DRIVE, SUITE A
GRAYSLAKE, ILLINOIS, 60030
847.223.4804 (O)
ILLINOIS CERTIFICATE OF AUTHORITY

STRUCTURAL
McCLUSKEY ENGINEERING CORPORATION
1387 HIGH GROVE LANE
NAPERVILLE, ILLINOIS, 60540
630.717.5399 (O) 630.717.5397(F)
ILLINOIS CERTIFICATE OF AUTHORITY

M.E.P.FP.
CONSOLIDATED CONSULTING ENGINEERS
224 SOUTH MILWAUKEE AVENUE, SUITE 1
WHEELING, ILLINOIS, 60090
847.215.8650 (O)
ILLINOIS CERTIFICATE OF AUTHORITY

ISSUANCE		
NO	DATE	DESCRIPTION
1	06/27/2025	BP1: ISSUED FOR BID
2	07/18/2025	REVISION 1
3	09/12/2025	PB2: ISSUED FOR BID & PERMIT

NORTHBROOK FIRE STATION 11
VILLAGE OF NORTHBROOK
820 DUNDEE ROAD, NORTHBROOK, IL

BP2: ISSUED FOR BID & PERMIT

LANDSCAPE PLAN

SHEET NO.
L1.0

JOB NO. 25-4186.01

© 2025 FGM Architects

EEA – P\24192 – FGMA – Northbrook Fire Station 11\Drawings\Northbrook Fire Station 11 Landscape Plan.dwg
Plotted: 9/10/25 @ 11:22am By: sgregory

Copyright 2025 FGM ARCHITECTS

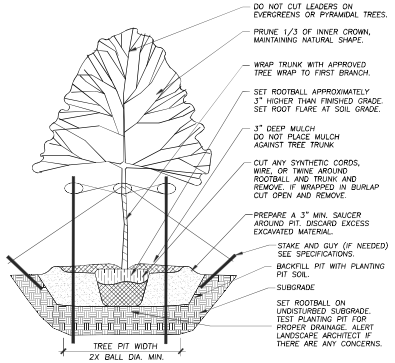

1 TREE PLANTING DETAIL

Not To Scale 329343-01

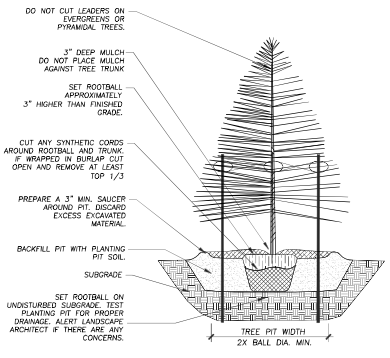

2 EVERGREEN TREE PLANTING DETAIL

NOT TO SCALE 329343-02

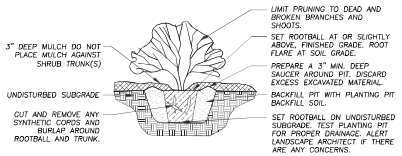

3 SHRUB PLANTING DETAIL

Not To Scale 329333-01

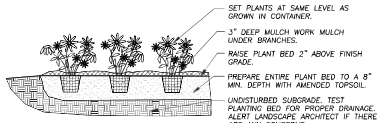

4 ANNUAL, PERENNIAL, & GROUNDCOVER DETAIL

Not To Scale 329301-03

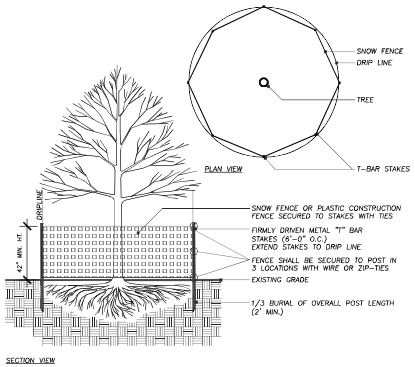

5 TREE PROTECTION DETAIL

Not To Scale 329383-01

fgma
FGMA ARCHITECTS
FGM Architects
1 Westbrook Corporate Center
Suite 1000
Westchester, Illinois 60154
630.574.8300 OFFICE
ILLINOIS PROFESSIONAL DESIGN FIRM #184.005592

CIVIL & LANDSCAPE
ERIKSSON ENGINEERING ASSOCIATES, LTD.
145 COMMERCE DRIVE, SUITE A
GRAYSLAKE, ILLINOIS, 60030
847.223.4804 (O)
ILLINOIS CERTIFICATE OF AUTHORITY

STRUCTURAL
McCLUSKEY ENGINEERING CORPORATION
1387 HIGH GROVE LANE
NAPERVILLE, ILLINOIS, 60540
630.717.5399 (O) 630.717.5397 (F)
ILLINOIS CERTIFICATE OF AUTHORITY

M.E.P.FP.
CONSOLIDATED CONSULTING ENGINEERS
224 SOUTH MILWAUKEE AVENUE, SUITE 1
WHEELING, ILLINOIS, 60090
847.215.8650 (O)
ILLINOIS CERTIFICATE OF AUTHORITY

ISSUANCE		
NO	DATE	DESCRIPTION
1	06/27/2025	BP1: ISSUED FOR BID
2	07/18/2025	REVISION 1
3	09/12/2025	PB2: ISSUED FOR BID & PERMIT

NORTHBROOK FIRE STATION 11
VILLAGE OF NORTHBROOK
820 DUNDEE ROAD, NORTHBROOK, IL

BP2: ISSUED FOR BID & PERMIT

LANDSCAPE DETAILS

SHEET NO.
L2.0

JOB NO. 25-4186.01

© 2025 FGM Architects

EEA - P\24192 - FGMA - Northbrook Fire Station 11\Drawings\Northbrook Fire Station 11 Landscape Plan.dwg
Plotted: 9/10/25 @ 10:42am By: sgregory
Copyright 2025 FGM ARCHITECTS

MEMORANDUM

To: Plan Commission
From: Deputy Director of Development and Planning Services Michaela Kohlstedt
Date: 2025-09-30
Subject: DOCKET NO. PCD-25-13: 3504 COMMERCIAL AVENUE - NORTHBROOK FLEET MAINTENANCE GARAGE FACILITY (*Public Hearing*). An application filed by Village of Northbrook as owner of the property commonly known as 3504 Commercial Avenue, for development of a new Village fleet maintenance garage for the purposes of: (A) Comprehensive Plan Map Amendment from General Industrial, Warehouse, and Office to Government Facility; (B) Rezoning from I-1 Restricted Industrial to IB Institutional Building District; (C) Variations of the following bulk and space regulations in the IB District: (i) Lot Area from 85,000 square feet to 69,000 square feet; (ii) Lot width from 300 feet to 200 feet; (iii) Required yard: interior side (east) from 20' to 19'11"; interior side (west) from 20' to 0'; and rear (north) from 20' to 10'; (iv) Required setback: front (south) from 35' to 32'10"; and interior side (east) from 20' to 19'11"; and (v) Floor Area Ratio from 0.35 to 0.45 (D) Variation to reduce the required parking from 35 spaces to 27 spaces (23%); (E) Variation to reduce the loading space requirement from 1 to 0; (F) Site Plan Approval; and (G) Approval of any such variations, waivers, and zoning relief as may be necessary.

Overview
The Village of Northbrook proposes to repurpose an existing industrial building for a new Village fleet maintenance garage facility on the Subject Property.

Fiscal Impact
N/A.

Recommendation
Conduct a public hearing and consider a draft Resolution recommending approval.

Background
See attachments.

3504 Commercial - Staff Report 9-30-25
3504 Commercial - Sustainability Addendum
3504 Commercial - Draft Plan Commission Resolution
3504 Commercial - Application Summary, Aerials, Site Photos

3504 Commercial - BOT Minutes 6-10-25
3504 Commercial - Excerpt Comprehensive Plan
3504 Commercial - Zoning Map Exhibits
3504 Commercial - Formal Application
3504 Commercial - Narrative & Plans

MEMORANDUM

To: Plan Commission
From: Senior Planner Swati Pandey
CC: Deputy Director Michaela Kohlstedt
Date: September 30, 2025
Subject: PCD-25-13: 3504 Commercial Avenue – Village Fleet Maintenance Garage Facility

INTRODUCTION

On September 30, 2025 the Plan Commission will conduct a public hearing on an application filed by Village of Northbrook (the "Applicant") as owner of the property commonly known as 3504 Commercial Avenue (the "Subject Property"). The applicant proposes to repurpose an existing industrial building for a new Village fleet maintenance garage facility on the Subject Property. The following zoning relief is requested:

a) Comprehensive Plan Map Amendment from General Industrial, Warehouse, and Office to Government Facility;

b) Rezoning from I-1 Restricted Industrial to IB Institutional Building District;

c) Variations of the following bulk and space regulations in the IB District:

   i) Lot Area from 85,000 square feet to 69,000 square feet;

   ii) Lot width from 300 feet to 200 feet;

   iii) Required yard: interior side (east) from 20' to 19'11"; interior side (west) from 20' to 0'; and rear (north) from 20' to 10';

   iv) Required setback: front (south) from 35' to 32'10"; and interior side (east) from 20' to 19'11"; and

   v) Floor Area Ratio from 0.35 to 0.45

d) Variation to reduce the required parking from 35 spaces to 27 spaces (23%);

e) Variation to reduce the loading space requirement from 1 to 0;

f) Site Plan Approval; and

g) Approval of any such variations, waivers, and zoning relief as may be necessary to accomplish development and use of the Subject Property as requested by the Applicant.

A sign has been posted on the Subject Property indicating the time and date of the Plan Commission public hearing. The Applicant has submitted evidence that the mailed notice requirements of the Zoning Code have been satisfied. The Plan Commission hearing was properly noticed in the August 28, 2025 edition of the *Northbrook Star*. To date staff has not received any public comments on the application.

PROPERTY DESCRIPTION

The Subject Property is noted as being:

- located on the north side of Commercial Avenue, between Huehl Road and Era Drive;
- approximately 69,000 square feet (1.58 acres) in size;
- improved with an industrial building (25,132 square feet) which was used by Glenkirk for intellectual and developmental services;

- zoned I-1 Restricted Industrial District;
- designated as appropriate for General Industrial, Warehouse, and Office in the Comprehensive Plan's Future Land Use;
- surrounded by properties with land uses as depicted on the attached Application Summary;
- not located within the 100-year flood plain; and
- not located in proximity to any areas identified in the Master Stormwater Management Plan.
- The Village's Bicycle and Pedestrian Plan designates Commercial Avenue in front of the subject property appropriate for a Conventional Bike Lanes (signage and striping to delineate the right-of-way assigned to bicyclists and motorists).

BACKGROUND INFORMATION

The property is developed with a single-story building in the industrial district, which is currently vacant. It was formerly occupied by Glenkirk, which was a non-profit organization running programs and services for individuals with intellectual disabilities.

The Village of Northbrook has purchased the property to move the fleet maintenance garage operations from its current location behind the Village Hall at 1225 Cedar Lane to this new location in the Sky Harbor Industrial Park. The applicant has proposed an adaptive reuse of the existing building, along with a small building addition and site work. The proposal requires a rezoning of the property amongst other zoning relief requests noted above.

Preliminary Review

On June 10, 2025, the Board of Trustees conducted a preliminary review of the request for a fleet maintenance garage facility for the Village. The Board found the use to be appropriate. An excerpt of the Board of Trustees minutes is attached for reference, and the meeting, and Board of Trustees commentary can be viewed on the Village website here.

The following is a table of the comments made by members of the Board of Trustees on the preliminary review application and concept site plan:

Trustee	Title	Status	Comments
Kathryn Ciesla	Village President	Present	In-favor of the use
Robert Israel	Trustee	Present	In-favor of the use
Heather Ross	Trustee	Present	In-favor of the use
Johannah Hebl	Trustee	Present	In-favor of the use
Joy Ebhomielen	Trustee	Present	In-favor of the use
Michelle Kohler	Trustee	Present	In-favor of the use
Matt Cassidy	Trustee	Present	In-favor of the use

Staff Review

Prior to scheduling a public hearing the application underwent the standard review process and was reviewed by the following departments/entities:

- Development and Planning Services (Planning & Zoning)
- Sustainability
- Public Works Department (Engineering and Tree Preservation)
- Fire
- Police

Staff reviewed the application and found it to be in compliance with the requirements. All departments have approved the application to proceed for a public hearing. Any comments pending are to be reviewed at the time of site work and building permit submittal.

Compliance with Village Plans

- The Comprehensive Plan identifies the property for General Industrial, Warehouse, and Office uses. The Applicant is requesting to amend the Future Land Use map to change the designation to 'Government Facility'. This designation is intended "to provide areas to accommodate existing and future government buildings".
- The Village's Bicycle and Pedestrian Plan designates Commercial Avenue in front of the subject property appropriate for Conventional Bike Lanes (signage and striping to delineate the right-of-way assigned to bicyclists and motorists)

PROPOSED PROJECT

- The Applicant owns the property and wants to repurpose the existing building to operate the Village activity of a fleet maintenance garage facility on publicly owned land. The current facility is located behind the Village Hall on Cedar Lane. The use will be considered as Village Activity Conducted on Publicly Owned Land (SIC No. 9100.02), which is a permitted use in the IB District. Details regarding the proposed request are outlined in the attached material submitted by the Applicant.
- The site will be rebuilt with expanded access drive, new stormwater detention facility, and site utilities. The applicant has proposed a parking lot reconfiguration on the north and west side of the property. The existing parking spaces immediately to the west of the building would be removed. The total parking count on the property would reduce from 35 spaces to 27 spaces. The proposed site plan shows mechanical equipment area immediately to the north of the building as well as in the northwest corner of the site. There will be a small utility shed in the rear as well.
- The existing building will be renovated with an approximately 1,000 square-foot addition located on the west side of the building, for a new vestibule and an elevator.
- The existing building structure and parking lot does not comply with the yard and setback requirements of the IB district; and will require variations. The proposed building addition does not increase the yard or setback non-conformity on the property.
- The facility would be staffed by eight existing employees.
- The facility will operate with standard business hours and in operation for emergency, evening, weekend hours as needed.
- Parking: The proposed site plan shows 27 parking spaces provided on-site. The parking requirement for a Village owned fleet garage would require 35 parking spaces (1 space per 900 square feet). Therefore, there will be a deficit of 8 parking spaces on the property per the requirements of the Zoning Code. A parking variation of approximately 23% will be required, where a maximum of 25% can be requested per Code.
- A six-foot tall chain-link fence will be installed along the rear and interior side property line. A six-foot decorative fence with gates will be installed perpendicular to the building to restrict access on the property. The location of the proposed fence is depicted on the proposed site plan.
- A new trash enclosure with a roof will be constructed adjacent to the building, as shown on the site plan. The enclosure would be ten-foot tall. The primary materials of the enclosure would match the building materials.
- A landscape plan has been provided by the Applicant. The plan shows landscaping proposed along Commercial Avenue and ground cover along north property line. Given the nature of use on the property, there is limited scope for landscaping and will be paved to accommodate heavy fleet vehicles on-site.
- A new ground sign will be installed along Commercial Avenue, which will be in compliance with the requirements of the Zoning Code. A sign permit will be required prior to installation.

- Stormwater detention system will be underground primarily in the southeast portion of the site under the driveway.

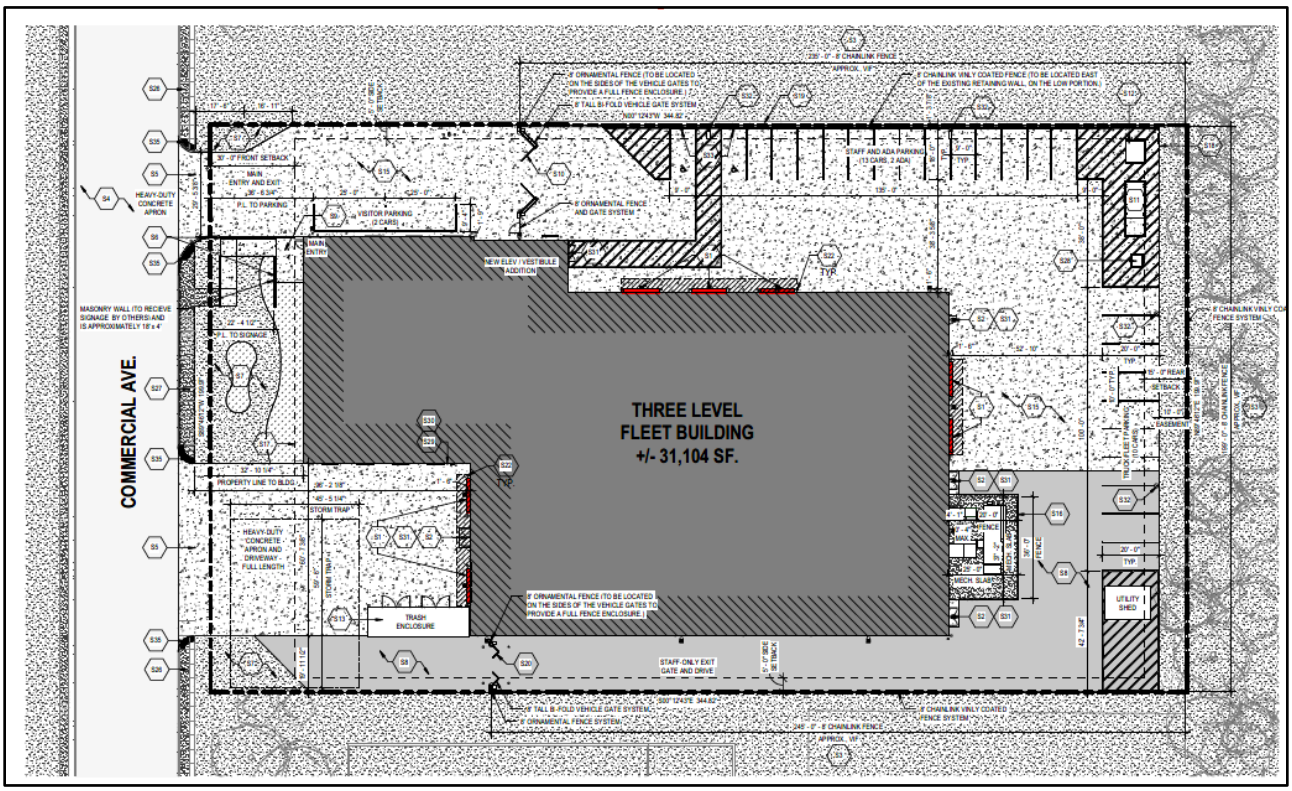

Figure 1: Proposed Site Plan

SUSTAINABILITY

Following the adoption of the Climate Action Plan (CAP), it is important to reference action items found in the CAP as they relate to development proposals. The Village's Sustainability Coordinator has drafted a Sustainability Addendum attached to this report, which goes into further detail on CAP items that are relevant to the Subject Property and the proposed plan.

ZONING RELIEF

The application was filed prior to the adoption of the new Zoning Code on September 9, 2025, and therefore, this application has been reviewed and is seeking relief per the requirements of the Northbrook Zoning Code adopted in 1988 as amended.

Comprehensive Plan Amendment

The Applicant is requesting to amend the Comprehensive Plan Future Land Use Map to change the land use classification for the Subject Property from General Industrial, Warehouse, and Office to Government Facility. The Comprehensive Plan currently designates the Subject Property as appropriate for industrial uses. General Industrial, Warehouse, and Office category is intended to provide areas to accommodate a range of manufacturing, warehousing, wholesaling, and office uses, for Sky Harbor Industrial Park.

An excerpt of the Comprehensive Plan is attached to this report noting the purpose, principal land uses, and applicable zoning district for Government Facility designation. This land use category is intended for existing and future government buildings, administrative offices, maintenance facilities and activities of the Village, Park District, County, State, and Federal government. Government Facility properties can be located anywhere throughout the Village.

The Plan Commission will want to consider whether or not it is appropriate to amend the Comprehensive Plan to designate the Subject Property as appropriate for Government Facility Uses. The Park District Headquarters, also located within the Sky Harbor Industrial Park is designated as Government Facility. There are several locations within the Village of Northbrook that are mapped as an Institutional Building and/or Government Facility as shown on the GIS map exhibits attached. Most properties zoned IB for government uses are scattered throughout the community, in what may appear as spot zoning; however, given the nature of the public services provided the district is appropriate to be located as standalone zoned lots within other districts.

Rezoning

If the Plan Commission finds it appropriate to amend the Comprehensive Plan to designate the Subject Property as appropriate for Government Facility uses, the Applicant will also need approval of a rezoning from the I-1 Restricted Industrial District to the IB Institutional Building District. All adjacent properties are zoned I-1 Restricted Industrial District, however, as earlier stated, the Park District headquarters office is zoned IB district in a similar condition in Sky Harbor.

The Zoning Code states that the IB Institutional Building District is intended to accommodate existing and future public buildings and buildings having purposes and impacts similar to public buildings. Given the fact that the Applicant is repurposing an existing building and property, there are several non-conformities identified within the IB district, however, there is no expansion of a non-conforming condition.

Variations

In addition to the above noted relief, the Applicant has also requested the following variations. The bulk and space variation requests listed below would remain the same under the new Zoning Code as well, with the exception of FAR. There is no FAR requirement in the IB district under the new Zoning Code.

- *Lot Area*: to reduce the required area from 85,000 square feet to 69,000 square feet, given that it is an existing lot with no scope of current expansion as there are developed and occupied industrial properties on all sides;
- *Lot Width*: to reduce the required lot width from 300 feet to 200 feet; given that it is an existing lot and cannot be expanded further;
- *Yard*: to reduce the required interior side (east) from 20' to 19'11"; interior side (west) from 20' to 0'; and rear (north) from 20' to 10' to accommodate the proposed parking lot and drive aisles;
- *Setback*: to reduce the required front (south) from 35' to 32'10"; and interior side (east) from 20' to 19'11" to accommodate the existing building; the small building addition proposed on the west side of the building does not encroach the required setback;
- *FAR*: to increase the required FAR from 0.35 to 0.45; the small building addition does not significantly impact the required FAR, considering the new addition will be an elevator;
- *Parking*: There are 50 parking spaces on the Subject Property, as shown on the Plat of Survey submitted by the Applicant. The Applicant has proposed a redevelopment of the parking lot to accommodate a fleet services facility, and the proposed parking will be reduced to 27 spaces. The parking requirement for a Village owned fleet garage would require 35 parking spaces (1 space per 900 square feet). Therefore, there will be a deficit of 8 parking spaces on the Subject Property per the requirements of the Zoning Code. A parking variation of approximately 23% will be required for the Subject Property, where a maximum of 25% can be requested per Code.

  The Applicant has submitted a statement of justification for their request (which is attached), stating primarily that their use serves the public with limited Village staff at the facility. It is occupied by a single use and it is not open to the general public.
- *Loading Space*: In addition to the above noted relief, the proposed site plan requires a variation to reduce the required number of loading space from 1 to 0. The Applicant has stated that given the nature of the use, the facility does not require a 10'x25' loading space; and the layout of the proposed facility does not accommodate a loading space of this size. In order to add a loading space, it would require eliminating required parking spaces.

SUMMARY

In reviewing this request, staff suggests the Plan Commission consider the following policy questions:

a) Is a fleet maintenance garage facility an appropriate use at the property?

b) Is it appropriate to amend the comprehensive plan map from General Industrial, Warehouse, and Office to Government Facility?

c) Is it appropriate to rezone the property from I-1 Restricted Industrial to IB Institutional Building District?

d) Is it appropriate to grant the following bulk and space variations in the IB district to accommodate the use?

   i) Lot Area from 85,000 square feet to 69,000 square feet;

   ii) Lot width from 300 feet to 200 feet;

   iii) Required yard: interior side (east) from 20' to 19'11"; interior side (west) from 20' to 0'; and rear (north) from 20' to 10';

   iv) Required setback: front (south) from 35' to 32'10"; and interior side (east) from 20' to 19'11"; and

   v) Floor Area Ratio from 0.35 to 0.45;

e) Is it appropriate to grant a 23% parking variation to reduce the required parking from 35 spaces to 27 spaces?

f) Is it appropriate to grant a loading space variation from 1 to 0?

Staff has prepared the attached draft resolution for consideration by the Commission. If the Commission should choose to amend and/or take action on this resolution, it would be **Resolution No. 25-PC-19.**

The Applicant and staff will attend the September 30, 2025 Plan Commission meeting to answer any questions.

MEMORANDUM

To: Plan Commission
From: Kate Carney, Sustainability Coordinator
cc: Amy McEwan, DPS Director
Date: September 30, 2025
Subject: PCD-25-13: 3504 Commercial – New Fleet Garage – Sustainability Addendum to Staff Report

Northbrook's Climate Action Plan (CAP) calls to foster sustainability and reduce 80% of community-wide carbon emissions by 2050 through strategic planning and action item implementation. With CAP adoption, development proposals are reviewed with respect to best environmental practices.

This property is owned by the Village of Northbrook. Several of the items outlined below were the subject of prior discussion by the Board of Trustees at both the Committee of the Whole and Board of Trustees meetings held on April 22, 2025. Items that were part of these discussion are marked with an asterisk (*). These prior discussions offered guidance on several key design elements.

Of the items presented to the Applicant 80% were fully realized according to CAP standards, to the extent detailed below in italics.

Transportation and Land Use
In the Transportation and Land Use section of the CAP, recommendations are made to enhance active mobility and fossil fuel-free transit:

TL 5-2 Consider including wiring capacity to charge electric vehicles.

Applicant response: The Village has designed the facility so that it can support EV charging and is reviewing options for standardized stations to be used at this facility but also other Village facilities.

Buildings and Energy
The Building Energy section of the CAP provides the following items pertaining to reducing our community-wide carbon footprint and preserving wildlife:

BE 1- 1 Use this Village facility to showcase clean energy systems and promote the technical and financial information needed to support broader scale adoption. Conduct a renewable energy potentials assessment for facility.*

Applicant response: The design of the building will meet the goals established by the Board of Trustees at both the Committee of the Whole and Board of Trustees meetings held on April 22, 2025.

BE 2- 1 Consider conducting a Solar PV Site Assessment. Assessment should include estimated installation cost, and projections for both energy generation potential and economic payback potential over a minimum 20-year timeframe. If installation will not be realized, confirm reserved space for solar-ready roof zone and plan for structural design loads and electrical service to allow for future installation of a dual pole circuit breaker if possible.*

Applicant response: The review of options for solar were considered for this building at the Committee of the Whole and Board of Trustees meetings held on April 22, 2025. It was determined that the existing roof structure over the warehouse could not support solar installation and the flat roof over the office space will not provide suitable sunlight or enough panels to be viable.

BE 5- 1 Explore opportunities for the property to utilize smart lights that can save energy through conservation. Achieve 100% LED installation if possible.

Applicant response: The facility has been designed so that all the lights will be LED and be managed for energy conservation.

BE 5- 4 Require purchase and installation of ENERGY STAR appliances when available.

Applicant response: The Village will attempt to use ENERGY STAR appliance whenever possible.

BE 7- 2 Consider the benefits of replacing fossil fuel burning heating equipment and with air-source heat-pumps, or other efficient electric heating options in development. Strive for zero on-site fossil fuel combustion with air-source heat-pumps, geo-thermal systems, solar thermal, electric cooktops, etc.*

Applicant response: The design of the building will meet the goals established by the Board of Trustees at both the Committee of the Whole and Board of Trustees meetings held on April 22, 2025, and included a geothermal well system, be an all-electric building.

Waste Management
The CAP points to procedures that may facilitate waste reduction (with a goal of at least 50% landfill wasted diverted by 2030) in its Waste Management section:

WM 2- 5 Assure compliance with the Cook County Construction & Demolition Debris Diversion Ordinance, and encourage contractors and subcontractors to exceed minimum requirements, where demolition occurs.

Applicant response: This will be coordinated during interior demolition.

WM 2- 7 Consider offering recycling and compost collection services.

Applicant response: The facility has been designed to include both recycling and composting receptacles.

Water and Wastewater
In the Water and Wastewater category, the CAP states to prioritize mitigating stormwater before it enters the sewer system through multiple capture techniques:

WW 1- 2 Reduce landscaping water use with water-efficient irrigation systems, grass replacement, and planting native and drought-resistant trees and vegetation in landscaping plans.

Applicant response: The landscaping plan will emphasize the use of native plantings and drought-resistant trees and vegetation. Staff is looking to install a butterfly garden in the front. There will be no irrigation system.

WW 1- 3 Evaluate the potential for installation of rainwater collection systems at Village facilities for graywater uses, and investigate opportunities for graywater reuse at existing and new Village facilities and properties.

Applicant response: These items were not incorporated into the plan.

WW 1- 4 Consider utilizing water conservation programs that focus on outdoor irrigation, which may also support better identification of water-related carbon sequestering opportunities such as using soil amendments, native grasses and proper tree watering.

Applicant response: The landscaping plan will emphasize the use of native plantings and drought-resistant trees and vegetation. There will be no irrigation system.

WW 2- 1 Prioritize managing stormwater before it enters the sewer system through a combination of overland flow, detention, and infiltration strategies (for example, permeable surfaces) where feasible.*

Applicant response: The design of the building will meet the goals established by the Board of Trustees at both the Committee of the Whole and Board of Trustees meetings held on April 22, 2025.

WW 3- 3 Reduce or offset impervious surfaces where possible and consider use of lighter colored pavements and building materials to lessen the impact of urban heat island effect.

Applicant response: This will be taken under advisement.

Greenspace and Ecosystem Health
The Plan's Greenspace category includes the following for expansion of tree canopy coverage, transforming beneficial lawns, and mitigation of heat island impacts:

GS 2- 5 Consider including exterior lighting design to protect native plants, species, biodiversity, and improve night sky quality.

Applicant response: This will be taken under advisement.

GS 1- 12 Plan for diversity of native tree cover and performance-based tree island within landscaping plan and parking lots with goals on percentage of pavement shaded. Consider a mix of canopy trees, shrubs, groundcovers, and raingarden components appropriate to the lot and its surroundings in any new landscaping where possible.

Applicant response: The landscaping plan will emphasize take this goal into consideration.

DRAFT

RESOLUTION NO. 25-PC-__

VILLAGE OF NORTHBROOK PLAN COMMISSION
DOCKET NO. PCD-25-13
(3504 COMMERCIAL AVENUE)

WHEREAS, an application has been filed by Village of Northbrook (the "Applicant") as owner of the property commonly known as 3504 Commercial Avenue (the "Subject Property"), for development of a new Village fleet maintenance garage, and

WHEREAS, the Applicant has filed an application (Docket No. PCD-25-13) with the Village of Northbrook requesting:

a) Comprehensive Plan Map Amendment from General Industrial, Warehouse, and Office to Government Facility;
b) Rezoning from I-1 Restricted Industrial to IB Institutional Building District;
c) Variations of the following bulk and space regulations in the IB District:
    i) Lot Area from 85,000 square feet to 69,000 square feet;
    ii) Lot width from 300 feet to 200 feet;
    iii) Required yard: interior side (east) from 20' to 19'11"; interior side (west) from 20' to 0'; and rear (north) from 20' to 10';
    iv) Required setback: front (south) from 35' to 32'10"; and interior side (east) from 20' to 19'11"; and
    v) Floor Area Ratio from 0.35 to 0.45
d) Variation to reduce the required parking from 35 spaces to 27 spaces (23%);
e) Variation to reduce the loading space requirement from 1 to 0;
f) Site Plan Approval; and
g) Approval of any such variations, waivers, and zoning relief as may be necessary to accomplish development and use of the Subject Property as requested by the Applicant.

WHEREAS, the Subject Property is designated as appropriate for General Industrial, Warehouse, and Office uses in the Village of Northbrook Comprehensive Plan; and

WHEREAS, a public notice for this docket was duly published on August 28, 2025 in the *Northbrook Star* and a public hearing was scheduled for September 16, 2025, but due to a lack of quorum the meeting was continued and held at a special meeting of the Plan Commission on September 30, 2025; and

WHEREAS, the Applicant has submitted evidence that sign was properly posted on the Subject Property, indicating the time and date of the Commission hearing, and that all property owners within 250 feet of the Subject Property were notified of the Commission hearing by certified mail; and

WHEREAS, the Plan Commission has considered all the evidence presented to it, including, but not limited to, the following:

1. Village of Northbrook Plan Commission Application form & attachments received August 19, 2025, and all subsequent additions and revisions to these application materials and attachments.
2. Comments made by the Board of Trustees during its review of the preliminary application regarding this request.
3. All written and oral testimony concerning the application.

NOW, THEREFORE, BE IT RESOLVED by the Plan Commission of the Village of Northbrook, Cook County, Illinois, THAT:

1. **Findings:**

   A. Comprehensive Plan Compliance. The Northbrook Plan Commission does hereby find that with respect to Docket No. PCD-25-13A, the Plan Commission hereby finds that the request to amend the Comprehensive Plan to change the designation of the Subject Property from General Industrial, Warehouse, and Office to Government Facility **does comply** with the standards for approval of such requests as established in the Northbrook Zoning Code.

   B. Zoning Map Amendment. With respect to Docket No. PCD-25-13B, the Plan Commission hereby finds that the Applicant's request to rezone the Subject Property from I-1 Restricted Industrial to IB Institutional Building District is consistent with the Northbrook Comprehensive Plan, as amended, and **does comply** with the standards for approval of such rezoning requests as established in Subsection 11-301 E(8) of the Northbrook Zoning Code.

   C. Variations. With respect to Docket No. PCD-25-13C, a request to reduce bulk and space requirements, the Plan Commission finds that the following variations **are consistent** with the standards for variations established in Subsection 11-503F of the Zoning Code:
      i) Lot Area from 85,000 square feet to 69,000 square feet;
      ii) Lot width from 300 feet to 200 feet;
      iii) Required yard: interior side (east) from 20' to 19'11"; interior side (west) from 20' to 0'; and rear (north) from 20' to 10';
      iv) Required setback: front (south) from 35' to 32'10"; and interior side (east) from 20' to 19'11"; and
      v) Floor Area Ratio from 0.35 to 0.45

   D. Parking Variation. With respect to Docket No. PCD-25-13D, the Plan Commission finds that a variation to reduce the required number of parking spaces from 35 to 27 spaces is **consistent** with the standards for such approvals as established in Section 11-503F of the Zoning Code.

   E. Loading Space Variation. With respect to Docket No. PCD-25-13E, the Plan Commission finds that a variation to reduce the required number of loading space from 1 to 0 is **consistent** with the standards for variations established in subsection 11-503F of the Zoning Code.

   F. Site Plan Approval. With respect to Docket No. PCD-25-13F, the Plan Commission does hereby find that the proposed improvements on the Subject Property are **consistent** with the standards for such approvals as established in Section 11-604 of the Zoning Code.

   G. Other Relief. With respect to Docket No. PCD-25-13G, the Plan Commission does hereby find that no other relief is necessary.

2. **Recommendations:** The Northbrook Plan Commission does hereby recommend to the Board of Trustees of the Village of Northbrook **approval** of Docket No. PCD-25-13A/B/C/D/E/F based on the findings established herein, subject to the following conditions:

   A. Comprehensive Plan Amendment. The Future Land Use Classifications component of the Comprehensive Plan shall be amended to designate the Subject Property as appropriate for Government Facility.

B. Zoning Map Amendment. The Subject Property shall be rezoned to be located in the IB Institutional Building District and shall comply with all requirements of the IB District, except for any variations granted.

C. Variations. The below requested variations shall be granted:

a) Lot Area from 85,000 square feet to 69,000 square feet;

b) Lot width from 300 feet to 200 feet;

c) Required yard: interior side (east) from 20' to 19'11"; interior side (west) from 20' to 0'; and rear (north) from 20' to 10';

d) Required setback: front (south) from 35' to 32'10"; and interior side (east) from 20' to 19'11"; and

e) Floor Area Ratio from 0.35 to 0.45

f) Variation to reduce the required parking from 35 spaces to 27 spaces (23%); and

g) Variation to reduce the required loading space requirement from 1 to 0.

D. Site Plan Approval. The site plan consisting of one page, prepared by FGM Architects, with the plan dated June 27, 2025, attached as ***Exhibit A***, shall be approved.

ADOPTED THIS __ day of September 2025.

AYES: ()

NAYS: ()

ABSENT: ()

ABSTAIN: ()

_____
Steven Elisco, Chairman
Northbrook Plan Commission

ATTEST:

_____
Amy McEwan, Director
Development and Planning Services

EXHIBIT A

Site Plan

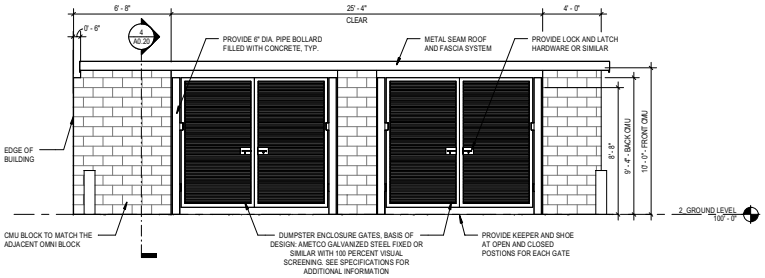

2 TRASH ENCLOSURE
1/4" = 1'-0"

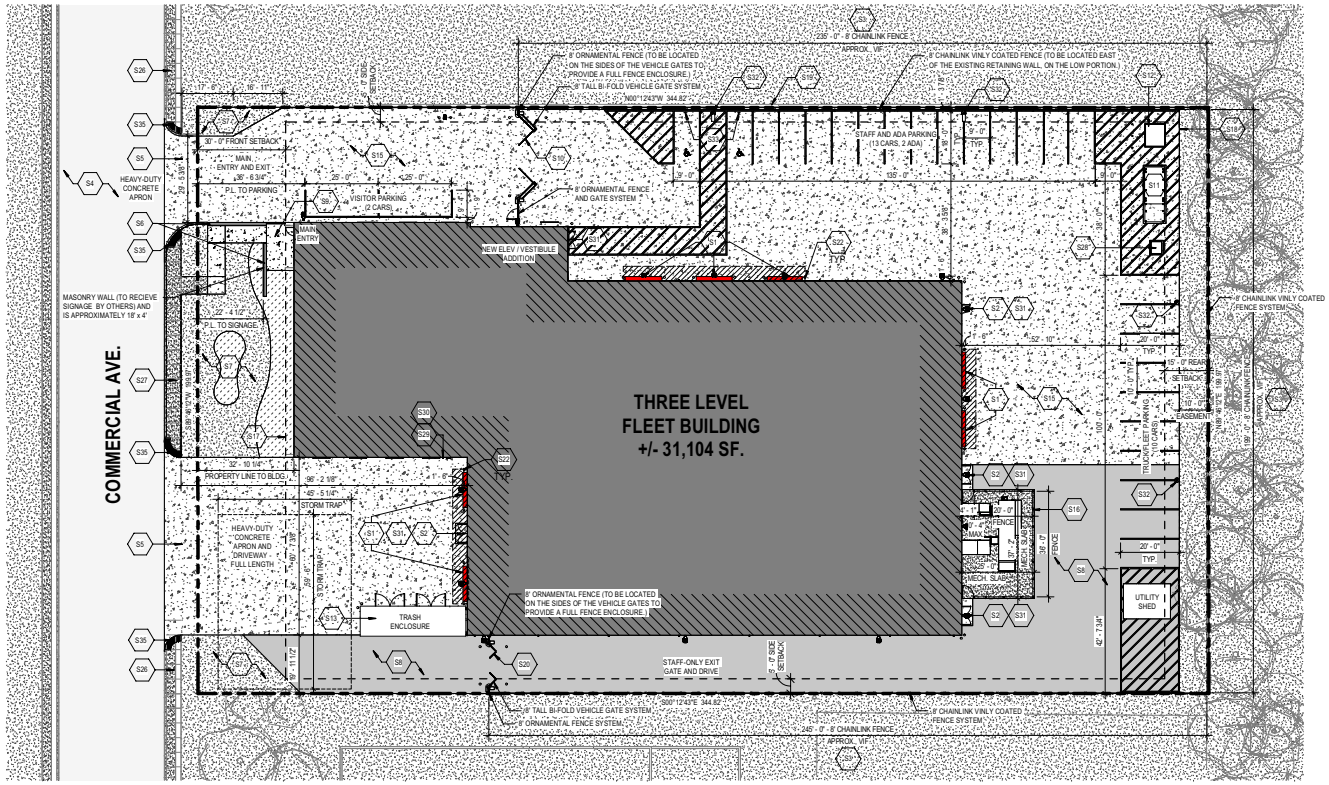

PLAN NORTH
TRUE NORTH

1 OVERALL SITE PLAN
1" = 20'-0"

SITE PLAN KEYED NOTES

TAG	DESCRIPTION
S1	INSTALL NEW OVERHEAD DOOR (14'W X 16'H), MODIFY SURROUNDING CONSTRUCTION AS REQUIRED TO ACCOMMODATE THE NEW SCOPE OF WORK.
S2	INSTALL NEW MAN DOOR(S).
S3	INSTALL NEW 8' CHAINLINK FENCE.
S4	EXISTING ROAD PAVEMENT TO REMAIN.
S5	NEW CONCRETE APRON.
S6	INSTALL NEW MASONRY KNEE / SIGNAGE WALL. SIGNAGE BY OTHERS.
S7	NEW RAIN GARDEN / BUTTERFLY GARDEN.
S8	INSTALL NEW ASPHALT PAVEMENT.
S9	PROVIDE NEW MAIN ENTRY STOOP/LANDING AND TIE INTO THE EXISTING BUILDING AND ADJACENT CONSTRUCTION AS REQUIRED. REPAIR ANY AREAS DAMAGED DURING CONSTRUCTION.
S10	INSTALL NEW ACCORDION RETRACTING SECURITY GATE. (20' CLEAR, 8' HEIGHT) SEE ENLARGED PLANS AND DETAILS FOR ADDITIONAL INFORMATION.
S11	PROPOSED GENERATOR LOCATION (EXACT SIZE AND ORIENTATION IS TBD).
S12	PROPOSED TRANSFORMER LOCATION (EXACT SIZE AND ORIENTATION IS TBD).
S13	INSTALL NEW DUMPSTER ENCLOSURE.
S15	INSTALL NEW HEAVY-DUTY CONCRETE PAVEMENT.
S16	INSTALL NEW FENCED AREA FOR MECHANICAL UNITS. EXACT SIZE / LOCATION TBD.
S17	30' FRONT YARD SETBACK.
S18	10' UTILITY EASEMENT.
S19	NOTE: THE EXISTING RETAING WALL IS NOT LOCATED ON OUR PROJECT'S PROPERTY. ANY NEW PERIMETER FENCE MAY BE LOCATED ON PROJECT PROPERTY OR THE NEIGHBOR WOULD NEED TO PERMIT THE FENCE TO BE INSTALLED ON THEIR LAND (AND AT THE TOP OF THE RETAINING WALL).
S20	INSTALL NEW ACCORDION RETRACTING SECURITY GATE. (12' CLEAR, 8' HEIGHT). SEE ENLARGED PLANS AND DETAILS FOR ADDITIONAL INFORMATION.
S22	PROVIDE NEW PIPE BOLLARD, SEE DETAIL ON SHEET A0.20 FOR ADDITIONAL INFORMATION.
S26	EXISTING SIDEWALK SYSTEM TO REMAIN. PROTECT DURING CONSTRUCTION.
S27	PROVIDE NEW SIDEWALK AND/OR CURB AND GRANULAR BASE SYSTEM AS REQUIRED. COORDINATE EXACT EXTENTS IN THE FIELD AND WITH THE CIVIL SCOPE OF WORK.
S28	PROPOSED TEMPORARY GENERATOR CONNECTION LOCATION (EXACT SIZE AND ORIENTATION IS TBD).
S29	APPROXIMATE LOCATION OF THE NEW FIRE DEPARTMENT CONNECTION AND WATERFLOW ALARM AND COMPONENTS AS REQUIRED TO PROVIDE A FULLY FUNCTIONAL SYSTEM. COORDINATE EXACT EXTENTS IN THE FIELD AND WITH THE NEW AND MEP SCOPE OF WORK.
S30	APPROXIMATE LOCATION OF THE NEW KNOX BOX ADJACENT TO THE FIRE DEPARTEMENT CONNECTION. KNOX BOX TO MEET ALL LOCAL AHJ REQUIREMENTS.
S31	PROVIDE FROST STOOP SYSTEM, TYPICAL AT EVERY EXTERIOR DOOR LOCATION. COORDINATE EXTENS WITH THE FIELD CONDITIONS AND CIVIL SCOPES OF WORK.
S32	PARKING LOT LIGHT POLE AND FOUNDATION SYSTEM. COORDINATE WITH CIVIL AND ELECTRICAL SCOPES OF WORK.
S33	ACCESSIBLE PARKING ONLY SIGN.
S35	DETECTABLE WARNING SYSTEM, CAST INTO THE CONCRETE SIDEWALK SYSTEM.

SITE PLAN LEGEND

- PROPERTY LINE
- EASEMENT
- SETBACK LINE
- FENCE LINE
- OVERHEAD DOOR
- CONCRETE SIDEWALK / MECHANICAL SLABS
- STREET
- HEAVY-DUTY CONCRETE PAVEMENT. CONCRETE APRONS/STOOPS TYPICAL AT OVERHEAD DOORS AND MAN DOORS. SEE PLANS FOR ADD'L NOTES.
- HEAVY-DUTY ASPHALT PAVEMENT
- INDICATED SNOW MELT SYSTEM. COORDINATE WITH CIVIL AND MECHANICAL SCOPES OF WORK.
- GRASS
- PLANTING AREA
- EXISTING UTILITY POLE
- FIRE HYDRANT
- GEOTHERMAL WELL

fgma
FGMARCHITECTS
FGM Architects
1 Westbrook Corporate Center
Suite 1000
Westchester, Illinois 60154
630.574.6300 OFFICE
ILLINOIS PROFESSIONAL DESIGN FIRM #184.008390

CIVIL & LANDSCAPE
ERIKSSON ENGINEERING ASSOCIATES, LTD.
145 COMMERCE DRIVE, SUITE A
GRAYSLAKE, ILLINOIS, 60030
847.223.4804 (O)
IL STATE CERTIFICATE OF AUTHORITY

STRUCTURAL
McCLUSKEY ENGINEERING CORPORATION
1887 HIGH GROVE LANE
NAPERVILLE, ILLINOIS, 60540
630.717.5399 (O) 630.717.539791
IL STATE CERTIFICATE OF AUTHORITY

M.E.P.FP
CONSOLIDATED CONSULTING ENGINEERS
224 SOUTH MILWAUKEE AVENUE, SUITE E
WHEELING, ILLINOIS, 60090
847.215.0600 (O)
IL STATE CERTIFICATE OF AUTHORITY

NOT FOR CONSTRUCTION

FOR REVIEW ONLY

Not for regulatory approval, permit or construction.

The information on this document is preliminary or incomplete, not for construction, recording purposes, or implementation.

ISSUANCE

NO	DATE	DESCRIPTION
	06/27/2025	100% DESIGN DEVELOPMENT

FLEET MAINTENANCE FACILITY
VILLAGE OF NORTHBROOK
3504 COMMERCIAL AVENUE, NORTHBROOK, IL

ISSUED FOR PLAN COMMISSION - 08/21/2025

SITE PLAN - OVERALL

SHEET NO.
PC1.10

JOB NO. 25-4189.01

© 2025 FGM Architects

9/8/2025 9:28:52 AM
Autodesk Docs://Northbrook Fleet Maintenance Facility/25-4189.01_Northbrook_Fleet_Maintenance_Facility_CD-CA_2024.rvt
Copyright 2025 FGM Architects

PCD-25-13: 3504 COMMERCIAL AVENUE
APPLICATION SUMMARY

Applicant:	Village of Northbrook
Site Location:	3504 Commercial Avenue
Requested Action:	Comprehensive Plan Amendment; Rezoning from I-1 Restricted Industrial to IB Institutional Building District; Bulk Variations; Parking & Loading Space Variation; and Site Plan Approval.
Proposal:	Village of Northbrook is requesting zoning approval to allow a Village fleet maintenance garage facility.
Existing Zoning & Land Use:	I-1 Restricted Industrial; Glenkirk Facility
Surrounding Zoning & Land Use:	North: I-1 Restricted Industrial; industrial uses South: I-1 Restricted Industrial; industrial uses East: I-1 Restricted Industrial; industrial uses West: I-1 Restricted Industrial; industrial uses
Comprehensive Plan Designation:	General Industrial, Warehouse and Office

ZONING MAP

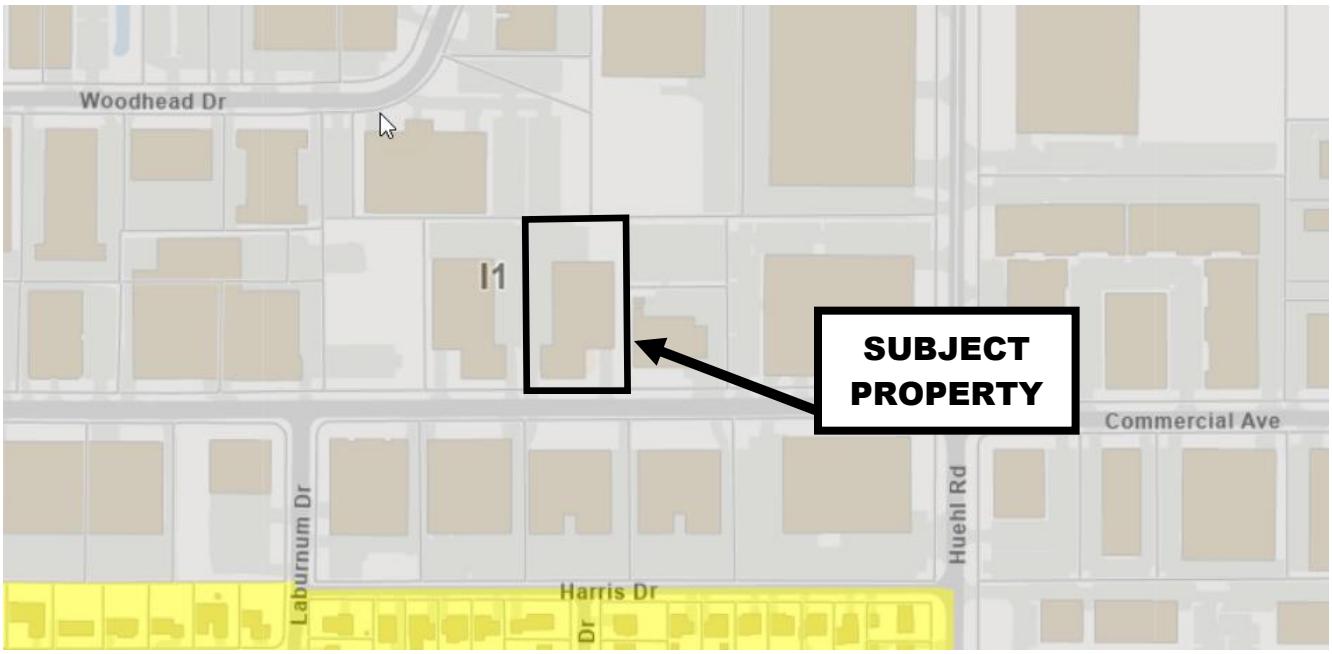

COMPREHENSIVE PLAN MAP

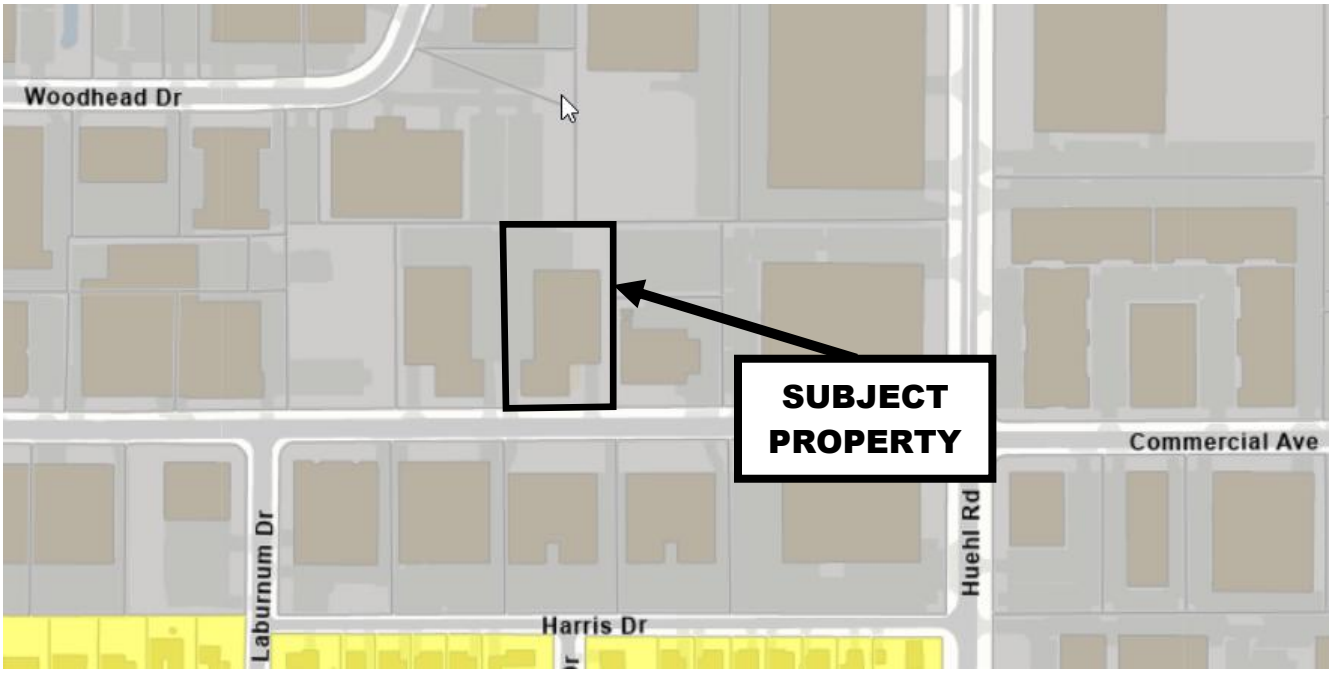

Legend

- Open Space & Outdoor Recreation
- Single Family
- Single Family Large Lot
- Multi-Family up to 6 DUA
- Multi-Family 6-9 DUA
- Multi-Family 9-15 DUA
- Multi-Family over 15 DUA
- Senior or Special Residential
- Government Facility
- Institutional Facility
- Neighborhood Office
- Neighborhood Edge 1
- Neighborhood Edge 2
- Office - Professional
- Office - Corporate/Corridor
- Community Retail
- Major Retail
- Industrial & Commercial Service
- General Industrial, Warehouse & Office
- Major Industrial/Distribution
- Transportation, Comm. & Utilities
- Village Center Mixed Use
- Techny Area Multi-Use
- Major Corridor Multi-Use
- Techny Area

GISConsortium | 3504 Commercial Avenue

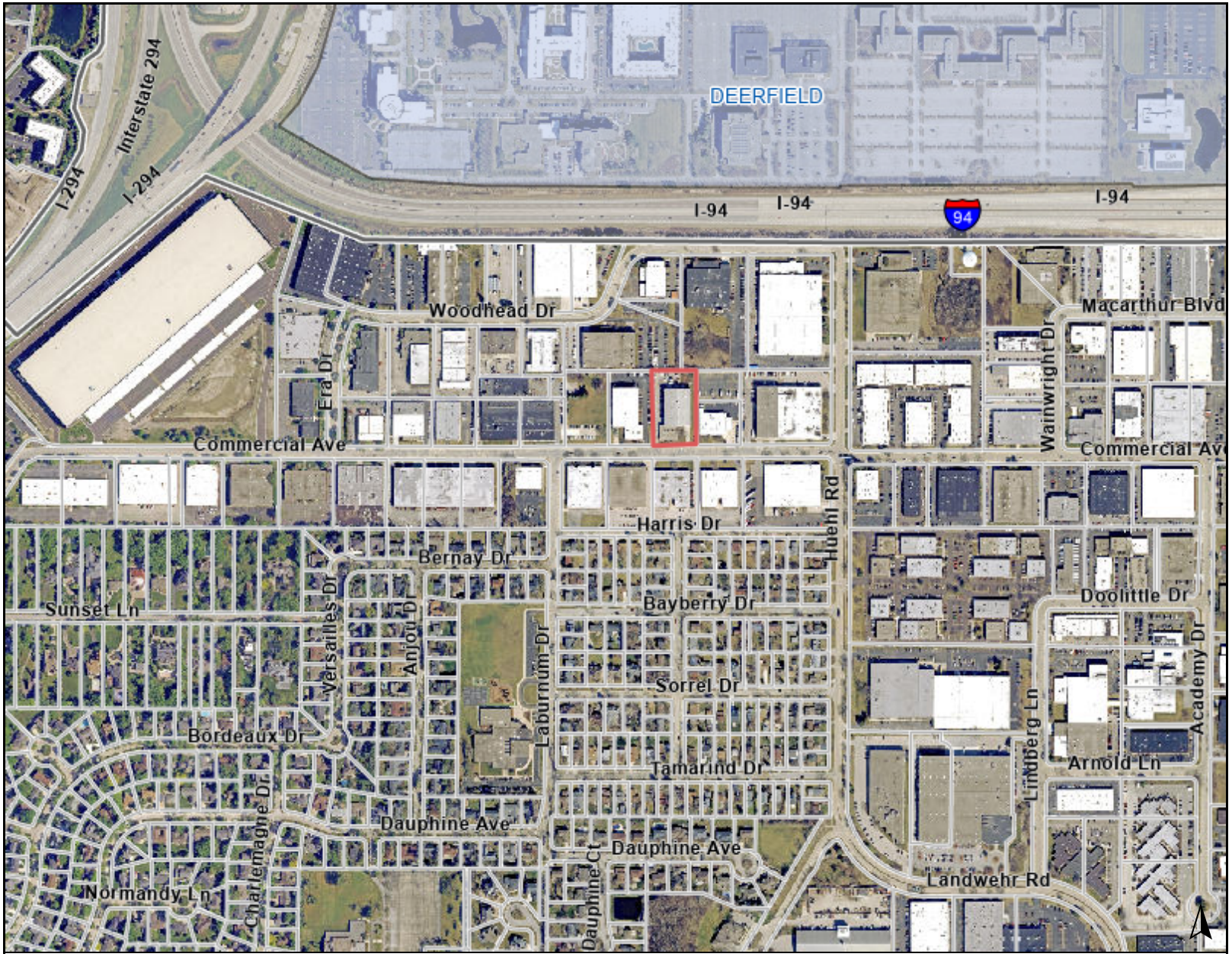

Legend

0 1000 2000 ft

Print Date: 5/27/2025

Notes

Disclaimer: The GIS Consortium and MGP Inc. are not liable for any use, misuse, modification or disclosure of any map provided under applicable law. This map is for general information purposes only. Although the information is believed to be generally accurate, errors may exist and the user should independently confirm for accuracy. The map does not constitute a regulatory determination and is not a base for engineering design. A Registered Land Surveyor should be consulted to determine precise location boundaries on the ground.

GISConsortium | 3504 Commercial Avenue



Legend

0 150 300 ft

Print Date: 5/27/2025

Notes

Disclaimer: The GIS Consortium and MGP Inc. are not liable for any use, misuse, modification or disclosure of any map provided under applicable law. This map is for general information purposes only. Although the information is believed to be generally accurate, errors may exist and the user should independently confirm for accuracy. The map does not constitute a regulatory determination and is not a base for engineering design. A Registered Land Surveyor should be consulted to determine precise location boundaries on the ground.


236





Village Board of Trustees Minutes

Sandra "Sandy" Frum Board Room
1225 Cedar Lane Northbrook, IL 60062
Tuesday, June 10, 2025

Village President Kathryn Ciesla called the meeting to order at 7:33 PM

1. ROLL CALL

Attendee Name	Title	Status
Kathryn Ciesla	Village President	Present
Robert Israel	Trustee	Present
Heather Ross	Trustee	Present
Johannah Hebl	Trustee	Absent
Joy Ebhomielen	Trustee	Present
Michelle Kohler	Trustee	Present
Matt Cassidy	Trustee	Present

2. PLEDGE OF ALLEGIANCE

3. SWEARING-IN OF CAPTAIN BRAD PUTNEY, LIEUTENANT TED PETERS, AND FIREFIGHTER/PARAMEDIC JACOB FIOLKA

4. MINUTES APPROVAL

A. May 27, 2025 Regular Board Meeting Minutes for Approval

RESULT:	**APPROVED [5 – 0]**
MOVER:	Heather Ross, Trustee
SECONDER:	Robert Israel, Trustee
AYES:	Israel, Ross, Hebl, Ebhomielen, Kohler, Cassidy
NAYES:	None
ABSTAIN:	Kathryn Ciesla, President
ABSENT:	Johannah Hebl, Trustee

5. PUBLIC COMMENT TIME

David Hochberg asked whether a discussion has taken place between Village officials and Village attorneys regarding the public forum space. Also, he inquired about when public input will be scheduled and how the days are being counted when signs are displayed in the public forum space.

6. MANAGER'S REPORT

Village Manager Pavlicek highlighted significant Cook County Road Improvement Projects.

Public Works has replaced nearly 25% of water meters village wide.

Thanked the Sustainability Commission for their Climate Action Day event.

B. Preliminary Review of a Zoning Request by the Village of Northbrook for the development of a Village fleet garage at 3504 Commercial Avenue

RESULT:	**MOTION TO REFER TO PLAN COMMISSION [5 – 0]**
MOVER:	Robert Israel, Trustee
SECONDER:	Joy Ebhomielen, Trustee
AYES:	Israel, Ross, Ebhomielen, Kohler, Cassidy
NAYES:	None
ABSTAIN:	Kathryn Ciesla, President
ABSENT:	Johannah Hebl, Trustee

Amy McEwan, Director of Development & Planning Services, discussed an application submitted by Village of Northbrook for the property located at 3504 Commercial Avenue. The applicant is requesting a comprehensive plan map amendment and zoning relief to rezone the property from I-1 Restricted to IB Institutional Building. She provided a brief overview of the following: property's history, zoning, and proposed plan.

She noted the requested relief/primary issues the Village Board should consider.

Trustees Israel, Ross, Ebhomielen, Kohler, and Cassidy were in favor of the comprehensive plan map amendment and rezoning.

C. Preliminary Review of a Zoning Request by the Village of Northbrook for the development of a fire station at 820 Dundee Road

RESULT:	**MOTION TO REFER TO PLAN COMMISSION [5 – 0]**
MOVER:	Michelle Kohler, Trustee
SECONDER:	Heather Ross, Trustee
AYES:	Israel, Ross, Ebhomielen, Kohler, Cassidy
NAYES:	None
ABSTAIN:	Kathryn Ciesla, President
ABSENT:	Johannah Hebl, Trustee

Amy McEwan, Director of Development & Planning Services, discussed an application submitted by Village of Northbrook for the property located at 3504 Commercial Avenue. The applicant is requesting a comprehensive plan map amendment and zoning relief to rezone the property from R-2 Single Family Residential to IB Institutional Building. She provided a brief overview of the following: property's history, zoning, and proposed plan.

She noted the requested relief/primary issues the Village Board should consider.

Trustees Israel, Ross, Ebhomielen, Kohler, and Cassidy were in favor of the comprehensive plan map amendment and rezoning.

12. **COMMUNITY AND SUSTAINABILITY** – None

13. **HOUSING** – None

14. **PUBLIC WORKS AND FACILITIES** – None

15. **PUBLIC SAFETY** – None

16. **COMMUNICATIONS AND OUTREACH** – None

GOVERNMENT FACILITY (GF)
Purpose: The Government Facility (GF) classification is intended to provide areas to accommodate existing and future government buildings.
Principal Land Uses: The primary land uses in the GF classification will be administrative offices, maintenance facilities, and office, storage and maintenance activities for the Village, Park District, County, State, and Federal government. Subordinate uses in this area may include open space activities so long as such uses support the governmental uses in the area.
Location Standards: GF areas are located in a number of areas throughout the Village.
Applicable Zoning District(s): IB Institutional Building District

INSTITUTIONAL FACILITY (IF)
Purpose: The Institutional Facility (IF) classification is intended to provide areas to accommodate existing and future educational facilities, religious and other membership facilities, cultural facilities, and in-patient health care facilities.
Principal Land Uses: The primary land uses in the IF classification will be educational facilities, religious and other membership facilities, cultural facilities, and in-patient health care facilities. Subordinate uses in this area may include open space activities so long as such uses support the institutional uses in the area.
Location Standards: IF areas are located in a number of areas throughout the Village.
Applicable Zoning District(s): IB Institutional Building District
Comments: Given that IF areas are generally located in close proximity to residential uses, special design considerations should be made so that the IF areas will be compatible with the nearby residential uses.

The remainder of this page is intentionally blank

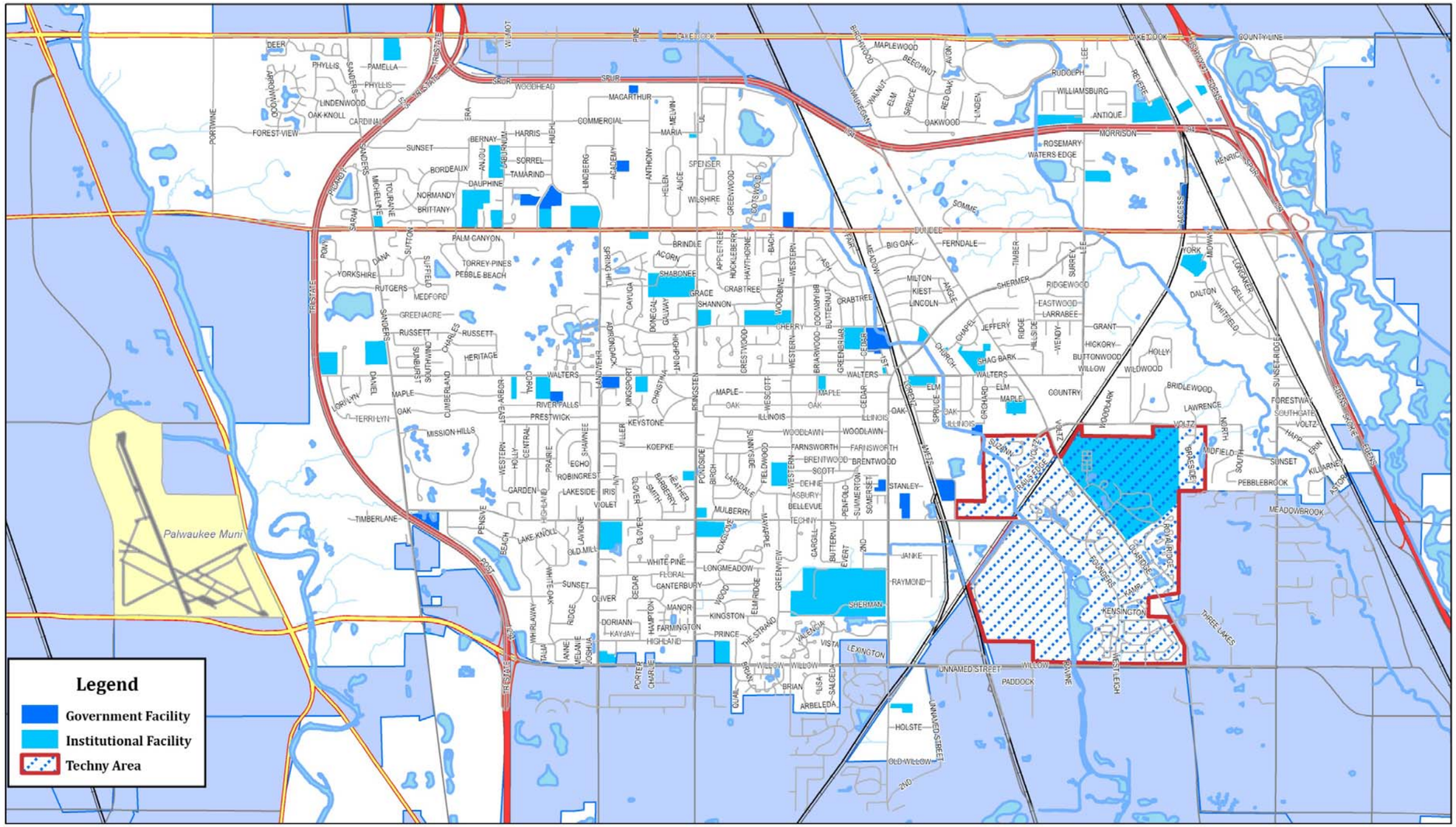

N
W E
S

Village of Northbrook
Development & Planning Services

2,000 1,000 0 2,000 4,000 6,000 Feet

Northbrook Comprehensive Plan
Future Land Use Map
Government & Institutional Areas

For 12-14-10
Board of Trustees
Meeting

GISConsortium

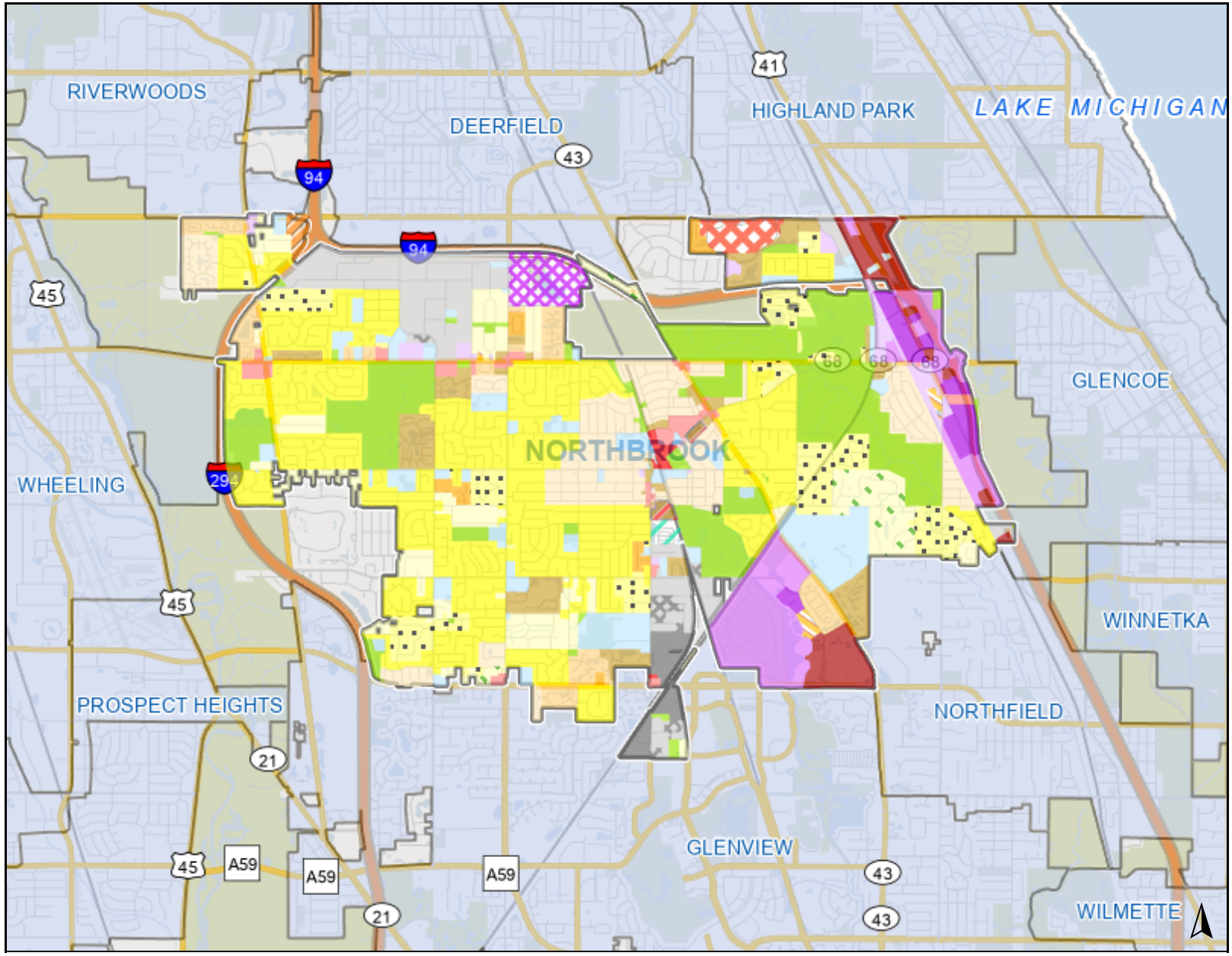

Legend

Zoning and Development

Zoning

- R1: Single Family Residential Districts
- R2: Single Family Residential Districts
- R3: Single Family Residential Districts
- R4: Single Family Residential Districts
- R5: Single Family Residential Districts
- R6: Multi-Family Residential Districts
- R7: Multi-Family Residential Districts
- R8: Multi-Family Residential Districts
- RS: Residential Specialty
- C1: Specialty Commercial District
- C2: Neighborhood Commercial District
- C3: Central Business District
- C4: Regional Shopping District
- C5: Boulevard Commercial District
- O1: Campus Office District
- O2: Limited Office District
- O3: General Office District
- O4: Boulevard Office District
- ICS: Industrial and Commercial Services District
- I1: Restricted Industrial District
- I2: Light Industrial District

0 2 4 mi

Print Date: 9/22/2025

Notes

Disclaimer: The GIS Consortium and MGP Inc. are not liable for any use, misuse, modification or disclosure of any map provided under applicable law. This map is for general information purposes only. Although the information is believed to be generally accurate, errors may exist and the user should independently confirm for accuracy. The map does not constitute a regulatory determination and is not a base for engineering design. A Registered Land Surveyor should be consulted to determine precise location boundaries on the ground.

INSTITUTIONAL BUILDING DISTRICTS

northbrook

Legend

- IB: Institutional Building District
- Municipal Boundary
- Other Municipal Boundary

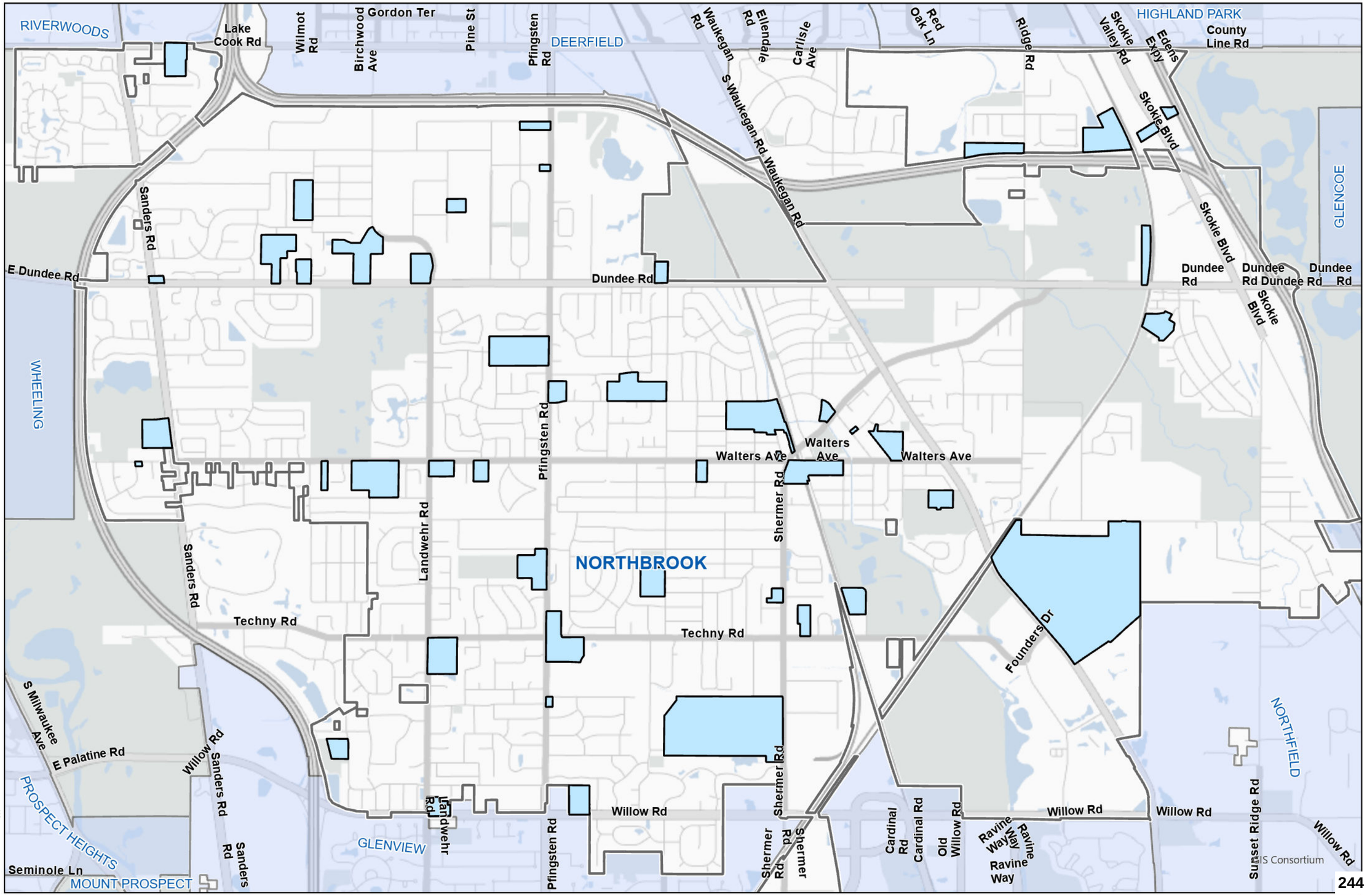

GIS Consortium

VILLAGE-OWNED PROPERTIES & CURRENT ZONING

northbrook

LEGEND

Village Owned Properties Zoning Designation

- Institutional Building District
- Multi-Family Residential Districts
- Neighborhood Commercial District
- Open Space District
- Restricted Industrial District
- Single Family Residential Districts
- Village Green Residential and Commercial District

Zoning Designation

- C2: Neighborhood Commercial District
- I1: Restricted Industrial District
- IB: Institutional Building District
- OS: Open Space District
- R3: Single Family Residential Districts
- R4: Single Family Residential Districts
- R5: Single Family Residential Districts
- R8: Multi-Family Residential Districts
- VGRC: Village Green Residential and Commercial

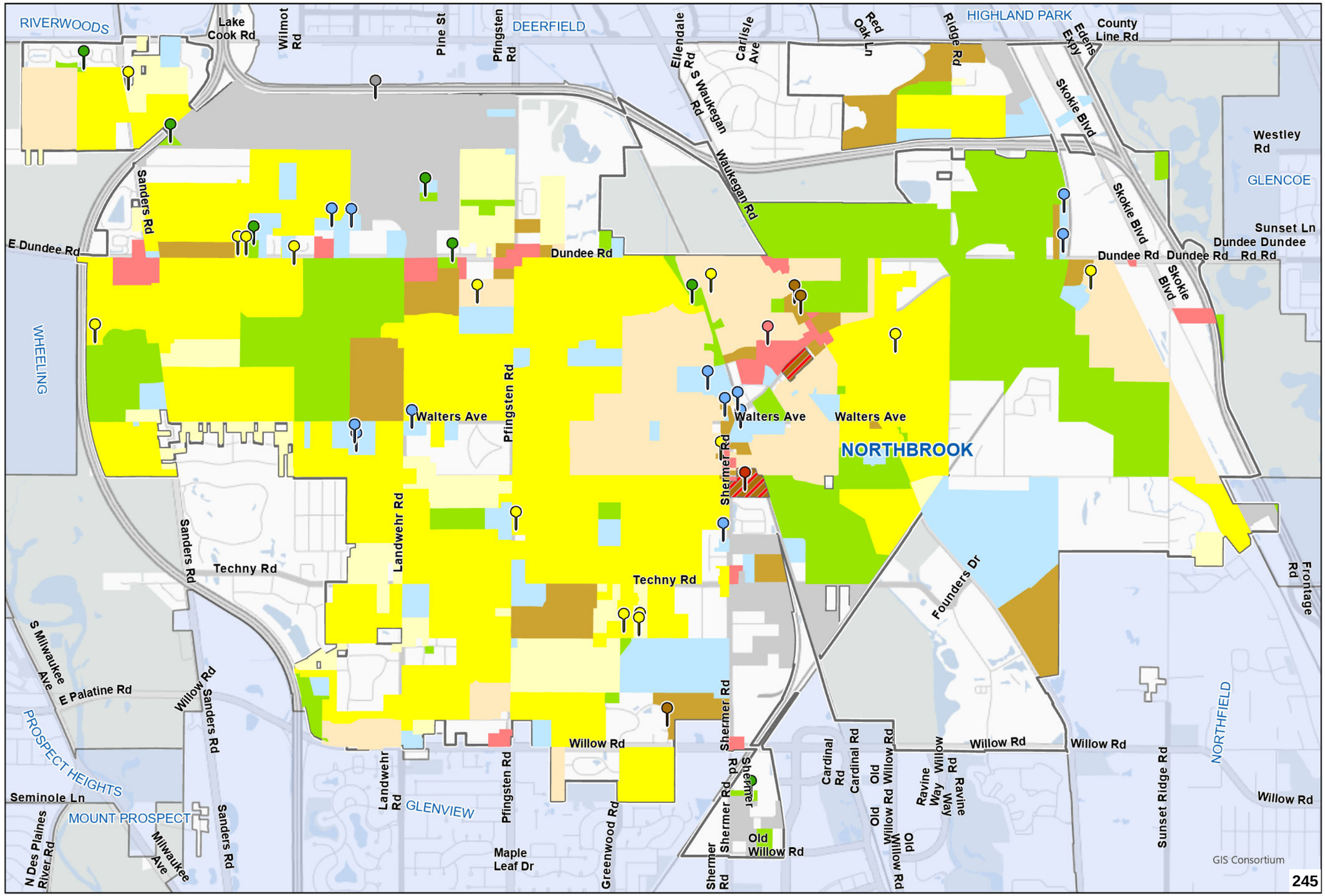

September 2025

VILLAGE-OWNED PROPERTIES & FUTURE LAND USE

northbrook

LEGEND

VILLAGE OWNED PROPERTIES BY FUTURE LAND USE DESIGNATION

- Community Retail
- Drainage Facility
- General Industrial, Warehouse & Office
- Government Facility
- Institutional Facility
- Major Corridor Multi-Use
- Open Space & Outdoor Recreation
- Private Open Space
- Public Recreation
- Senior or Special Residential
- Single Family
- Transportation, Comm. & Utilities
- Village Center Mixed Use

FUTURE LAND USE DESIGNATION

- Community Retail
- Drainage Facility
- General Industrial, Warehouse & Office
- Government Facility
- Institutional Facility
- Major Corridor Multi-Use
- Open Space & Outdoor Recreation
- Private Open Space
- Public Recreation
- Senior or Special Residential
- Single Family
- Transportation, Comm. & Utilities
- Village Center Mixed Use
- Municipal Boundary
- Other Municipal Boundary

0 0.15 0.3 Miles

N W E S

September 2025

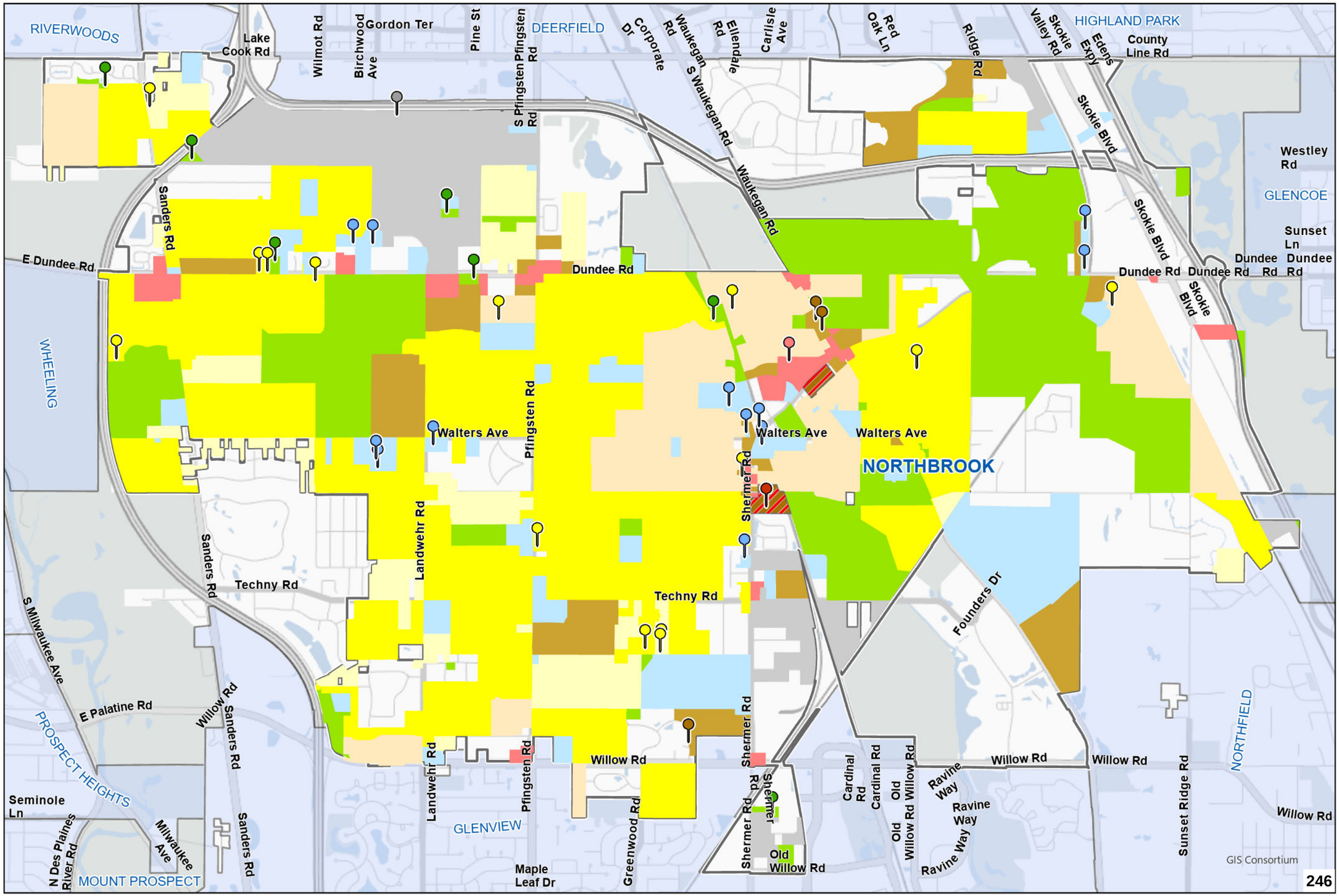

FORMAL APPLICATION – ZONING & SUBDIVISION RELIEF**

Prior to submitting this formal application, the matter must first be reviewed as a preliminary application by the Village Board of Trustees. If the Board has not yet reviewed your preliminary application, please contact the Department of Development & Planning Services to learn what is required. The following materials are the minimum required for the processing of a formal application by the Village of Northbrook's Plan Commission and Board of Trustees. A public hearing or public meeting for an application will not be scheduled until all required materials have been submitted and revised as necessary to meet Code requirements, as determined by Village staff. If you have questions regarding the completion of this application please contact the Development & Planning Services Department at 847-664-4050.

Applications for zoning relief from the Zoning Board of Appeals must use a different application form.

The initial submittal MUST contain:

☒ **1 electronic version (PDF)** of ALL application materials **(refer to application section regarding instructions).**

Applicant Information

Legal Name Village of Northbrook

Company

Address 1225 Cedar Lane

City, State, Zip Northbrook, IL. 60062

[redacted]

Primary Contact Person

Name Cara Pavlicek

Company Village of Northbrook

Address 1225 Cedar Lane

City, State, Zip 60062

[redacted]

Consultants *(as applicable)*

Attorney

Name

Company

Address

City, State, Zip

Phone No.

Email

Architect/Planner

Name Ray Lee

Company FGM Architect

[redacted]

Civil Engineer

Name

Company Eriksson Engineering Associates, Ltd.

[redacted]

Email

Other

Name

Company

Address

City, State, Zip

Phone No.

Email

Property Information *(if more than one parcel is involved in the request please include the information for all parcels)*

Site Location/Address: 3504 Commercial Avenue, Northbrook, IL. 60062

Property Index Numbers: 04-05-102-010-000

Size of Property: 69,000 sq. ft. (square feet/acres)

Size of Building Space, if applicable: 31,000 sq. ft. (square feet)

Comprehensive Plan Land Use Designation[1]: General Industrial

Current Zoning: I-1

Current Use of the Property: Services to individuals with intellectual disabilities

Is any portion of the property within the 100-year floodplain?[1] Yes: _____ No: X

Requested Action(s) *(check all that are applicable)*

- [X] Comprehensive Plan Amendment
- [ ] Annexation (*separate form required*)
- [X] Rezoning from I-1 to IB
- [ ] Special Permit for _____
- [ ] Renewal of Special Permit Ord. No. _____
- [ ] Amendment to Existing Special Permit
  Ord. No. _____
- [X] Site Plan Approval
- [ ] Zoning Code Text Amendment
- [X] Zoning Variation (in conjunction with other relief) for Lot Area 85,000 to 69,000, Lot Width 300' to 200' Yard and Setback, Floor Area Ratio .35 to .45, Parking
- [ ] Planned Development - Concept Plan
- [ ] Planned Development - Final Plan
- [ ] Subdivision - Tentative Plat
- [ ] Subdivision - Final Plat
- [ ] Subdivision - Variations/Waiver for _____
- [ ] Exception for _____
- [ ] Other _____

[X] Plat of Survey & Parcel Legal Description(s)

Attach the most recent plat of survey of the Subject Property, certified by a registered land surveyor, showing existing lot lines and dimensions, lot area, all easements, all public and private rights-of-way, and all streets across and adjacent to the subject property.

[X] Conformity with Comprehensive Plan

Include a written statement explaining the conformity, or lack of conformity, of the approval being requested to the Village's Official Comprehensive Plan and Official Map. Where the approval being requested does not conform to the Official Comprehensive Plan or Official Map, provide reasons justifying the requested approval.

[X] Surrounding Property Owners Addresses

Please attach the names and mailing addresses of all property owners of record (not tenants) within 250 feet of the property, excluding public rights-of-way, based on current County tax records. See page10 of this document for instructions on how to obtain the addresses.

[1] As found on the Village website www.northbrook.il.us/Government/Departments/Planning/GIS/index.php

Site Ownership and Control

Current Property Owner Information

Legal Name: Village of Northbrook

Primary Contact: Cara Pavlicek

Address 1225 Cedar Lane

City, State, Zip Northbrook, IL. 60062

[redacted]

Proposed Property Owner Information

Legal Name: _____

Primary Contact: _____

Address _____

City, State, Zip _____

Phone No. _____

Email _____

Attach a copy of a title policy or deed showing current ownership of the property. If property is held in a trust, also include a certified copy of the trust agreement or a simple affidavit (under oath before a notary) as to who are the beneficiaries of the trust. *(Check which document(s) are attached):*

- ☒ Deed
- ☐ Title Policy or Title Commitment ***(Required for Subdivision Applications & Plats of Consolidation Applications)***
- ☐ Certified Copy of Trust Agreement OR a simple Affidavit Identifying Trust Beneficiaries

☐ **Complete Attachment A, listing all individuals/entities that have a beneficial interest in the legal entity that currently owns the property**

☐ **Complete Attachment B, listing all individuals/entities that have a beneficial interest in the legal entity that is proposed to own the property upon receiving necessary approvals.**

Applicants Involvement with the Property

If the Applicant does not own the property, please also provide documentation showing the applicant's interest in the property *(Check which document is attached. The dollar amounts in documents may be blacked-out)*:

- ☐ Owner (see the previous box)
- ☐ Real Estate Contract
- ☐ Lease
- ☐ Other _____

☐ **Complete Attachment C, listing all individuals/entities that have a beneficial interest in the legal entity that is the Applicant.**

Additional Required Attachment(s)

Submit all relevant attachments specified in the below worksheet(s) that correspond with your application request(s) selected on page two of this application; the worksheets can be found on the Village of Northbrook website www.northbrook.il.us, as well as in the Community Planning Department in the Village Hall. *(Check all that are applicable)*

- ☒ Comprehensive Plan Amendment Worksheet
- ☐ Annexation Worksheet
- ☒ Rezoning Worksheet
- ☐ Special Permit Worksheet
- ☐ Site Plan Approval Worksheet
- ☐ Zoning Code Text Amendment Worksheet
- ☒ Zoning Variation Worksheet
- ☐ Planned Development Worksheet- Concept Plan
- ☐ Planned Development Worksheet- Final Plan
- ☐ Subdivision Worksheet – Tentative Plat
- ☐ Subdivision Worksheet - Final Plat
- ☐ Subdivision Worksheet - Variations/Waiver
- ☐ Zoning Exception Worksheet
- ☐ Condominium Conversion Worksheet
- ☐ Plat of Consolidation Worksheet

Filing Fees

All applications require payment of a non-refundable fee, as well as additional funds that are held in escrow to off-set anticipated recoverable expenses. Please attach a check with your application and indicate below the amount of the fee submitted. A copy of the fee schedule is attached to the application form.

$_____ Amount of Non-Refundable Fee

$_____ Amount of Escrow

$_____ Total Application Fee (Non-Refundable Fee plus Escrow)

The escrow covers such items as Village attorney time (currently billing at approx. $400.00 per hour), public notice expenses, public meetings ($50.00 per mtg), & staff review time. If these expenses exceed the initial escrow deposit, the applicant is responsible for additional payment to the Village prior to completing approval process. If the expenses are less than the escrow deposit, the applicant will be issued a refund.

Northbrook Ethics Code *(potential conflicts of interest)*
On a separate sheet of paper list the name, address, nature, and extent of any current or potential interest that any Village officer or employee may have in, or with respect to the owner, the applicant, or the property. **If none, check here:** _____
(For more information, see Sections 2-71 through 2-85 of the Northbrook Municipal Code located on our website, or pick-up a copy of the Northbrook Ethics Code booklet in the Development & Planning Services Department at the Village Hall)

Repeat Application

Has any other application for this property been submitted to the Village and denied within the last two years?
____ yes __X__ no (check one)
If yes, attach a statement of the grounds justifying reconsideration (See Zoning Code Sec. 11-302).

Applicant/Owner Acknowledgments

By execution of this application in the space provided below, the Applicant and Owner(s) do hereby certify, acknowledge, agree and affirm to the Village of Northbrook that:

1. The Village and its representatives have the right, and are hereby granted permission and license, to enter upon the property, and into any structures located thereon, for purposes of conducting any inspections that may be necessary in connection with this application.

2. I (We) have carefully read this application, the Northbrook Zoning Code and Northbrook Subdivision & Development Code and fully understand the terms and provisions of each.

3. I (We) waive any rights to exemption from disclosure under the Illinois Freedom of Information Act of any and all documents and information submitted in connection with this application.

4. I (We), in accordance with the requirements of the Annual Fee Ordinance, the Northbrook Zoning Code and the Northbrook Subdivision & Development Code, agree to pay all applicable filing fees and be responsible for the payment of all reimbursable expenses associated with the processing of this application.

Applicants may attach additional materials or exhibits to this application if necessary or helpful in explaining the relief requested.

Signature of Applicant: _____ **Date** 8-21-2025
Print Name & Title: Cara Pavlicek, Village Manager
Signatures of Property Owner(s): _____ **Date** 8-21-2025
Print Name & Title: Cara Pavlicek, Village Mgr **Property Address:** 1225 Cedar Lane
****If more than one applicant or property owner, please copy this page and have additional applicants/property owners sign form.**

Note: Village review and approval of rezoning, special permit, and subdivision applications may be dependent upon the Applicant first receiving necessary approvals from State and County regulatory agencies such as, but not limited to, the Illinois Department of Transportation, Illinois Environmental Protection Agency, the Metropolitan Water Reclamation District of Greater Chicago, & the Cook County Highway Department.

COMPREHENSIVE PLAN AMENDMENT WORKSHEET

In addition to submitting the *Formal Application* form for a comprehensive plan amendment request, the Applicant must include the following information with your application. A Plan Commission public hearing for an application will not be scheduled until all required materials have been submitted and revised as necessary to meet Code requirements, as determined by Village staff. All of the required application materials must be submitted to the Department of Development and Planning Services.

The initial submittal MUST contain:

- ☐ **5 collated copies of complete sets** of all application materials including the application form, required attachments, and folded full size plat/plan sheets
- ☒ **1 electronic version (PDF)** of all application materials submitted in a format as described on the last page of the Formal Application form.

REQUIRED MATERIALS FOR SUBMISSION

☒ **Statement of Justification**

A written statement of need for the requested comprehensive plan amendment is required. The statement shall address the following factors as outlined in Subsection 11-301 E of the Zoning Code. The staff, Plan Commission and Board of Trustees will use these standards in making a determination whether or not the proposed Comprehensive Plan Amendment is appropriate. Please complete the below form (use additional paper if needed) and submit this form with the formal application.

a) The existing uses and zoning classifications of properties in the vicinity of the subject property.
See attached summary.

b) The trend of development in the vicinity of the subject property, including changes, if any, in such trend since the subject property was placed in its present plan designation or zoning classification.
See attached summary.

c) The extent to which the value of the subject property is diminished by the existing plan designation or zoning classification applicable to it.
See attached summary.

d) The extent to which such diminution in value is offset by an increase in the public health, safety and welfare.
See attached summary.

e) The extent, if any, to which the use and enjoyment of adjacent properties would be affected by the proposed amendment.
See attached summary.

OVER →

f) The extent, if any, to which the value of adjacent properties would be affected by the proposed amendment.
See attached summary.

g) The extent, if any, to which the future orderly development of adjacent properties would be affected by the proposed amendment.
See attached summary.

h) The suitability of the subject property for uses permitted or permissible under its present plan designation and zoning classification.
See attached summary.

i) The availability of adequate ingress to and egress from the subject property and the extent to which traffic conditions in the immediate vicinity of the subject property would be affected by the proposed amendment.
See attached summary.

j) The availability of adequate utilities and essential public services to the subject property to accommodate the uses permitted or permissible under its present plan designation and zoning classification.
See attached summary.

k) The length of time, if any, that the subject property has been vacant, considered in the context of the pace of development in the vicinity of the subject property.
See attached summary.

l) The community need for the proposed map amendment and for the uses and development it would allow.
See attached summary.

3504 Commercial

Statement of Justification

A written statement of need for the requested comprehensive plan amendment is required. The statement shall address the following factors as outlined in Subsection 11-301 E of the Zoning Code. The staff, Plan Commission and Board of Trustees will use these standards in making a determination whether or not the proposed Comprehensive Plan Amendment is appropriate. Please complete the below form (use additional paper if needed) and submit this form with the formal application.

a) The existing uses and zoning classifications of properties in the vicinity of the subject property.

All the surrounding properties are Zoned I-1. The property to the west is a tree service/removal company. The property to the east is a mailing company and bottled water distribution. Properties to the north are manufacturing companies.

b) The trend of development in the vicinity of the subject property including changes, if any, in such trend since the subject property was placed in its present plan designation or zoning classification.

There have been no recent changes in the development trends for the surrounding properties. The surrounding businesses have been stable and occupying space for a while.

c) The extent to which the value of the subject property is diminished by the existing plan designation or zoning classification applicable to it.

The current zoning of the property does not diminish the value of the property. The use of a fleet garage does fit into the area. However, the consistency of having all Village property zoned IB is important.

d) The extent to which such diminution in value is offset by an increase in public health, safety and welfare.

The current use of the property does provide value to the community. The adaptive re-use of the building for a fleet garage will provide value as we will be maintaining all Village vehicles including those used for first responders.

e) The extent, if any, to which the use and enjoyment of adjacent properties would be affected by the proposed amendment.

The adjacent properties would not experience impacts from the development. They may see a reduction in traffic at the site as the current use has many visitors and use generated traffic.

f) The extent, if any, to which the value of adjacent properties would be affected by the proposed amendment.

They would not see any negative impact. The Village will be investing in substantial improvements on the site and improve the appearance.

g) The extent, if any, to which the future orderly development of adjacent properties would be affected by the proposed amendment.

The surrounding properties would not be impacted for future development. The use of the property as IB and a fleet garage would not limit their use.

h) The suitability of the subject property for uses permitted or permissible under its present plan designation and zoning classification.

The present plan designation and zoning classification could be used for I-1. The use of the property as a fleet maintenance garage also fits into the area. However, the IB zoning is more suitable for a Village facility.

i) The availability of adequate ingress to and egress from the subject property and the extent to which traffic conditions in the immediate vicinity of the subject property would be affected by the proposed amendment.

The primary access for the property will continue to be off of Commercial Avenue. There are currently two entrances to the property and those will remain but improved. The use of the property does not generate a constant flow of vehicles and has limited visitors.

j) The availability of adequate utilities and essential public services to the subject property to accommodate the uses permitted or permissible under its present plan designation and zoning classification.

There are suitable utilities and does not impact the provision of essential public services.

k) The length of time, if any, that the subject property has been vacant, considered in the context of the pace of development in the vicinity of the subject property.

The property has not been vacant an used by the current owner for many years.

l) The community need for the proposed map amendment and for the uses and development it would allow.

The existing fleet garage is almost 70 years old and it is very difficult to maintain the fleet in this location. Relocating the fleet garage on this property with an adaptive reuse of the facility will help improve the service provided to the all Village Departments and improve not only the service provided but a better work environment for employees.

REZONING & ZONING MAP WORKSHEET

In addition to submitting the *Formal Application* form for a rezoning request, also known as a zoning map amendment, the Applicant must include the following information with your application. A Plan Commission public hearing for an application will not be scheduled until all required materials have been submitted and revised as necessary to meet Code requirements, as determined by Village staff. All of the required application materials must be submitted to the Department of Development & Planning Services.

The initial submittal MUST contain:

- ☐ **5 collated copies of complete sets** of all application materials including the application form, required attachments, and folded full size plat/plan sheets
- ☒ **1 electronic version (PDF)** of all application materials submitted in a format as described on the last page of the Formal Application form.

REQUIRED MATERIALS FOR SUBMISSION

- ☐ **Specify Current Zoning District(s)**: I-1 - Industrial
- ☐ **Specify Requested Zoning District(s)**: IB - Institutional Building
- ☐ **Statement of Justification**

A written statement of need for the requested rezoning and zoning map amendment is required. The statement of justification shall address the following factors as outlined in Subsection 11-301 E of the Zoning Code. The staff, Plan Commission and Board of Trustees will use these standards in making a determination whether or not the proposed rezoning is appropriate. Please complete the below form (use additional paper if needed) and submit this form with the formal application.

a) The existing uses and zoning classifications of properties in the vicinity of the subject property.

See attached summary.

b) The trend of development in the vicinity of the subject property, including changes, if any, in such trend since the subject property was placed in its present plan designation or zoning classification.

See attached summary.

c) The extent to which the value of the subject property is diminished by the existing plan designation or zoning classification applicable to it.

See attached summary.

d) The extent to which such diminution in value is offset by an increase in the public health, safety and welfare.

See attached summary.

e) The extent, if any, to which the use and enjoyment of adjacent properties would be affected by the proposed amendment.

See attached summary.

OVER →

f) The extent, if any, to which the value of adjacent properties would be affected by the proposed amendment.
See attached summary.

g) The extent, if any, to which the future orderly development of adjacent properties would be affected by the proposed amendment.
See attached summary.

h) The suitability of the subject property for uses permitted or permissible under its present plan designation and zoning classification.
See attached summary.

i) The availability of adequate ingress to and egress from the subject property and the extent to which traffic conditions in the immediate vicinity of the subject property would be affected by the proposed amendment.
See attached summary.

j) The availability of adequate utilities and essential public services to the subject property to accommodate the uses permitted or permissible under its present plan designation and zoning classification.
See attached summary.

k) The length of time, if any, that the subject property has been vacant, considered in the context of the pace of development in the vicinity of the subject property.
See attached summary.

l) The community need for the proposed map amendment and for the uses and development it would allow.
See attached summary.

3504 Commercial

Statement of Justification

A written statement of need for the requested comprehensive plan amendment is required. The statement shall address the following factors as outlined in Subsection 11-301 E of the Zoning Code. The staff, Plan Commission and Board of Trustees will use these standards in making a determination whether or not the proposed Comprehensive Plan Amendment is appropriate. Please complete the below form (use additional paper if needed) and submit this form with the formal application.

a) The existing uses and zoning classifications of properties in the vicinity of the subject property.

All the surrounding properties are Zoned I-1. The property to the west is a tree service/removal company. The property to the east is a mailing company and bottled water distribution. Properties to the north are manufacturing companies.

b) The trend of development in the vicinity of the subject property including changes, if any, in such trend since the subject property was placed in its present plan designation or zoning classification.

There have been no recent changes in the development trends for the surrounding properties. The surrounding businesses have been stable and occupying space for a while.

c) The extent to which the value of the subject property is diminished by the existing plan designation or zoning classification applicable to it.

The current zoning of the property does not diminish the value of the property. The use of a fleet garage does fit into the area. However, the consistency of having all Village property zoned IB is important.

d) The extent to which such diminution in value is offset by an increase in public health, safety and welfare.

The current use of the property does provide value to the community. The adaptive re-use of the building for a fleet garage will provide value as we will be maintaining all Village vehicles including those used for first responders.

e) The extent, if any, to which the use and enjoyment of adjacent properties would be affected by the proposed amendment.

The adjacent properties would not experience impacts from the development. They may see a reduction in traffic at the site as the current use has many visitors and use generated traffic.

f) The extent, if any, to which the value of adjacent properties would be affected by the proposed amendment.

They would not see any negative impact. The Village will be investing in substantial improvements on the site and improve the appearance.

g) The extent, if any, to which the future orderly development of adjacent properties would be affected by the proposed amendment.

The surrounding properties would not be impacted for future development. The use of the property as IB and the fleet garage would not limit their use.

h) The suitability of the subject property for uses permitted or permissible under its present plan designation and zoning classification.

The present plan designation and zoning classification could be used for I-1. The use of the property as a fleet maintenance garage also fits into the area. However, the IB zoning is more suitable for a Village facility.

i) The availability of adequate ingress to and egress from the subject property and the extent to which traffic conditions in the immediate vicinity of the subject property would be affected by the proposed amendment.

The primary access for the property will continue to be off of Commercial Avenue. There are currently two entrances to the property and those will remain but improved. The use of the property does not generate a constant flow of vehicles and has limited visitors.

j) The availability of adequate utilities and essential public services to the subject property to accommodate the uses permitted or permissible under its present plan designation and zoning classification.

There are suitable utilities and does not impact the provision of essential public services.

k) The length of time, if any, that the subject property has been vacant, considered in the context of the pace of development in the vicinity of the subject property.

The property has not been vacant and used by the current owner for many years.

l) The community need for the proposed map amendment and for the uses and development it would allow.

The existing fleet garage is almost 70 years old and it is very difficult to maintain the fleet in this location. Relocating the fleet garage on this property with an adaptive reuse of the facility will help improve the service provided to the all Village Departments and improve not only the service provided but a better work environment for employees.

ZONING VARIATION WORKSHEET

In addition to submitting the *Plan Commission Application* form **for a zoning variation in conjunction with a special permit, subdivision, or rezoning application**, the Applicant must include the following information with your application. A Plan Commission public hearing for an application will not be scheduled until all required materials have been submitted and revised as necessary to meet Code requirements, as determined by Village staff. All of the required application materials must be submitted to the Department of Development & Planning Services.

The initial submittal MUST contain:

- ☐ **5 collated copies of complete sets** of all application materials including the application form, required attachments, and folded full size plat/plan sheets
- ☒ **1 electronic version (PDF)** of all application materials submitted in a format as described on the last page of the Formal Application form.

REQUIRED MATERIALS FOR SUBMISSION

☐ **Describe Variation Being Requested:** Lot Area 85,000 sq. ft. to 69,000 sq. ft., Lot width 300' to 200', Yard and Setback, Floor Area Ration from .35 to .45

☐ **Statement of Justification**

Every application filed pursuant to Section 11-503 of the Zoning Code shall provide a statement of how the variation sought would satisfy the standards set forth in Subsection 11-503 F of this Code. The staff, Plan Commission and Board of Trustees will use these standards in making a determination whether or not the proposed variation is appropriate. Please complete the below form (use additional paper if needed) and submit this form with the formal application.

(a) General Standard. No variation of the Zoning Code shall be granted unless the applicant shall establish that carrying out the strict letter of the provisions of Zoning Code would create a particular hardship or a practical difficulty. Such a showing shall require proof that the variation being sought satisfies each of the standards set forth below.

See attached summary.

(b) Unique Physical Condition. The subject property is exceptional as compared to other lots subject to the same provision by reason of a unique physical condition, including presence of an existing use, structure or sign, whether conforming or nonconforming; irregular or substandard shape or size; exceptional topographical features; or other extraordinary physical conditions peculiar to and inherent in the subject property that amount to more than a mere inconvenience to the owner and that relate to or arise out of the lot rather than the personal situation of the current owner of the lot.

See attached summary.

(c) Not Self-Created. The aforesaid unique physical condition is not the result of any action or inaction of the owner or his predecessors in title and existed at the time of the enactment of the provisions from which a variation is sought or was created by natural forces or was the result of governmental action, other than the adoption of the Zoning Code, for which no compensation was paid.

See attached summary.

OVER →

(d) Denied Substantial Rights. The carrying out of the strict letter of the provision from which a variation is sought would deprive the owner of the subject property of substantial rights commonly enjoyed by owners of other lots subject to the same provision.

See attached summary.

(e) Not Merely Special Privilege. The alleged hardship or difficulty is not merely the inability of the owner or occupant to enjoy some special privilege or additional right not available to owners or occupants of other lots subject to the same provision, nor merely an inability to make more money from the sale of the subject property; provided, however, that where the standards herein set out exist, the existence of an economic hardship shall not be a prerequisite to the grant of an authorized variation.

See attached summary.

(f) Code and Plan Purposes. The variation would not result in a use or development of the subject property that would not be in harmony with the general and specific purposes for which the Zoning Code and the provision from which a variation is sought were enacted or the general purpose and intent of the Official Comprehensive Plan.

See attached summary.

(g) Essential Character of the Area. The variation would not result in a use or development on the subject property that:

1. Would be materially detrimental to the public welfare or materially injurious to the enjoyment, use, development value of property or improvements permitted in the vicinity;
2. Would materially impair an adequate supply of light and air to the properties and improvements in the vicinity;
3. Would substantially increase congestion in the public streets due to traffic or parking;
4. Would unduly increase the danger of flood or fire;
5. Would unduly tax public utilities and facilities in the area; or
6. Would endanger the public health or safety.

See attached summary.

COMPLIANCE WITH VILLAGE REGULATIONS

All applications will be reviewed to determine compliance with the following Village codes and regulations:

- Zoning Code
- Subdivision & Development Code
- Standards and Specifications Manual
- Tree Protection and Tree Preservation Ordinance
- Existing Conditions
- Restrictive Covenants
- Development Agreements
- All other applicable Village codes and regulations

The applicant is responsible for ensuring a submitted application includes all of the necessary submittal requirements and meets all applicable standards and requirements of the Village codes.

Village Departments Involved with the Review of Community Planning Applications

- Development & Planning Services
- Fire
- Police
- Public Works/Engineering
- Village Attorney

Statement of Justification

Every application filed pursuant to Section 11-503 of the Zoning Code shall provide a statement of how the variation sought would satisfy the standards set forth in Subsection 11-503 F of this Code. The staff, Plan Commission and Board of Trustees will use these standards in making a determination whether or not the proposed variation is appropriate. Please complete the below form (use additional paper if needed) and submit this form with the formal application.

(a) General Standard. No variation of the Zoning Code shall be granted unless the applicant shall establish that carrying out the strict letter of the provisions of Zoning Code would create a particular hardship or a practical difficulty. Such a showing shall require proof that the variation being sought satisfies each of the standards set forth below.

The lot width of the property is limited due to the uses of the adjacent properties. In order to meet the IB requirements, the Village would have to purchase additional properties to the west or the east. The additional property purchases are not feasible nor available at this time. The Village was able to design the facility for our use even with a substandard lot size for the IB zoning.

(b) Unique Physical Condition. The subject property is exceptional as compared to other lots subject to the same provision by reason of a unique physical condition, including presence of an existing use, structure or sign, whether conforming or nonconforming; irregular or substandard shape or size; exceptional topographical features; or other extraordinary physical conditions peculiar to and inherent in the subject property that amount to more than a mere inconvenience to the owner and that relate to or arise out of the lot rather than the personal situation of the current owner of the lot.

The size of the lot does pose some difficulties with the size and access to the rear of the property which provides access to the warehouse area. Any I-1 uses which have larger trucking size needs would also be limited to the circulation on the property and the adjacent parking. While the lot area, width, yard and setback variations and floor area ratio are greater in the IB district, the location and the size of the building are suitable for the adaptive reuse for the Village Fleet Maintenance Garage,

(c) Not Self-Created. The aforesaid unique physical condition is not the result of any action or inaction of the owner or his predecessors in title and existed at the time of the enactment of the provisions from which a variation is sought or was created by natural forces or was the result of governmental action, other than the adoption of the Zoning Code, for which no compensation was paid.

The village did not create this condition of the lot, and it has been in the same configuration since the subdivision was created.

(d) Denied Substantial Rights. The carrying out of the strict letter of the provision from which a variation is sought would deprive the owner of the subject property of substantial rights commonly enjoyed by owners of other lots subject to the same provision.

If the zoning variations are not approved, the site would not be usable for the Fleet Maintenance Garage, and we would need to look for a new property. This has been difficult due to the availability and size of the properties.

(e) Not Merely Special Privilege. The alleged hardship or difficulty is not merely the inability of the owner or occupant to enjoy some special privilege or additional right not available to owners or occupants of other lots subject to the same provision, nor merely an inability to make more money from the sale of the subject property; provided, however, that where the standards herein set out exist, the existence of an economic hardship shall not be a prerequisite to the grant of an authorized variation.

The location of the fleet garage is essential for providing vehicle services to the fleet which provides services to the residents and business. The location of the proposed fleet garage is in a good location for the accessibility of vehicles and the use is consistent for the area. In this case the IB district requirements are greater than the size of the property but our intended use works.

(f) Code and Plan Purposes. The variation would not result in a use or development of the subject property that would not be in harmony with the general and specific purposes for which the Zoning Code and the provision from which a variation is sought were enacted or the general purpose and intent of the Official Comprehensive Plan.

The variations that are being requested would not impact on the use of other properties. The IB district indicates a type of owner (public use) of the property, but the use of the property in this case works well with the surrounding properties zoning.

(g) Essential Character of the Area. The variation would not result in a use or development on the subject property

1. Would be materially detrimental to the public welfare or materially injurious to the enjoyment, use, development value of property or improvements permitted in the vicinity.

   The use improves the value of the property in the vicinity by the Village's investment.

2. Would materially impair an adequate supply of light and air to the properties and improvements in the vicinity.

   The adaptive reuse of the property does not substantially change the building envelope; there is only a small addition being built.

3. Would substantially increase congestion in the public streets due to traffic or parking.

   The current use has more visitors, employees and ongoing activities than the proposed use of the fleet garage.

4. Would unduly increase the danger of flood or fire;

   The property would provide suitable stormwater management, and the new facility would have improved fire suppression systems.

5. Would unduly tax public utilities and facilities in the area; or

   The use would not impact utilities in the area.

6. Would endanger the public health or safety.

   The facility would help improve the services provided by Fleet Maintenance by addressing operational deficiencies that exist in the current garage.

ZONING VARIATION WORKSHEET

In addition to submitting the *Plan Commission Application* form **for a zoning variation in conjunction with a special permit, subdivision, or rezoning application**, the Applicant must include the following information with your application. A Plan Commission public hearing for an application will not be scheduled until all required materials have been submitted and revised as necessary to meet Code requirements, as determined by Village staff. All of the required application materials must be submitted to the Department of Development & Planning Services.

The initial submittal MUST contain:

- ☐ **5 collated copies of complete sets** of all application materials including the application form, required attachments, and folded full size plat/plan sheets
- ☒ **1 electronic version (PDF)** of all application materials submitted in a format as described on the last page of the Formal Application form.

REQUIRED MATERIALS FOR SUBMISSION

☐ **Describe Variation Being Requested:** Parking: 35 spaces reduced to 27

☐ **Statement of Justification**

Every application filed pursuant to Section 11-503 of the Zoning Code shall provide a statement of how the variation sought would satisfy the standards set forth in Subsection 11-503 F of this Code. The staff, Plan Commission and Board of Trustees will use these standards in making a determination whether or not the proposed variation is appropriate. Please complete the below form (use additional paper if needed) and submit this form with the formal application.

(a) General Standard. No variation of the Zoning Code shall be granted unless the applicant shall establish that carrying out the strict letter of the provisions of Zoning Code would create a particular hardship or a practical difficulty. Such a showing shall require proof that the variation being sought satisfies each of the standards set forth below.

See attached summary.

(b) Unique Physical Condition. The subject property is exceptional as compared to other lots subject to the same provision by reason of a unique physical condition, including presence of an existing use, structure or sign, whether conforming or nonconforming; irregular or substandard shape or size; exceptional topographical features; or other extraordinary physical conditions peculiar to and inherent in the subject property that amount to more than a mere inconvenience to the owner and that relate to or arise out of the lot rather than the personal situation of the current owner of the lot.

See attached summary.

(c) Not Self-Created. The aforesaid unique physical condition is not the result of any action or inaction of the owner or his predecessors in title and existed at the time of the enactment of the provisions from which a variation is sought or was created by natural forces or was the result of governmental action, other than the adoption of the Zoning Code, for which no compensation was paid.

See attached summary.

OVER →

(d) Denied Substantial Rights. The carrying out of the strict letter of the provision from which a variation is sought would deprive the owner of the subject property of substantial rights commonly enjoyed by owners of other lots subject to the same provision.

See attached summary.

(e) Not Merely Special Privilege. The alleged hardship or difficulty is not merely the inability of the owner or occupant to enjoy some special privilege or additional right not available to owners or occupants of other lots subject to the same provision, nor merely an inability to make more money from the sale of the subject property; provided, however, that where the standards herein set out exist, the existence of an economic hardship shall not be a prerequisite to the grant of an authorized variation.

See attached summary.

(f) Code and Plan Purposes. The variation would not result in a use or development of the subject property that would not be in harmony with the general and specific purposes for which the Zoning Code and the provision from which a variation is sought were enacted or the general purpose and intent of the Official Comprehensive Plan.

See attached summary.

(g) Essential Character of the Area. The variation would not result in a use or development on the subject property that:

1. Would be materially detrimental to the public welfare or materially injurious to the enjoyment, use, development value of property or improvements permitted in the vicinity;
2. Would materially impair an adequate supply of light and air to the properties and improvements in the vicinity;
3. Would substantially increase congestion in the public streets due to traffic or parking;
4. Would unduly increase the danger of flood or fire;
5. Would unduly tax public utilities and facilities in the area; or
6. Would endanger the public health or safety.

See attached summary.

COMPLIANCE WITH VILLAGE REGULATIONS

All applications will be reviewed to determine compliance with the following Village codes and regulations:

- Zoning Code
- Subdivision & Development Code
- Standards and Specifications Manual
- Tree Protection and Tree Preservation Ordinance
- Existing Conditions
- Restrictive Covenants
- Development Agreements
- All other applicable Village codes and regulations

The applicant is responsible for ensuring a submitted application includes all of the necessary submittal requirements and meets all applicable standards and requirements of the Village codes.

Village Departments Involved with the Review of Community Planning Applications

- Development & Planning Services
- Fire
- Police
- Public Works/Engineering
- Village Attorney

Statement of Justification

Every application filed pursuant to Section 11-503 of the Zoning Code shall provide a statement of how the variation sought would satisfy the standards set forth in Subsection 11-503 F of this Code. The staff, Plan Commission and Board of Trustees will use these standards in making a determination whether or not the proposed variation is appropriate. Please complete the below form (use additional paper if needed) and submit this form with the formal application.

(a) General Standard. No variation of the Zoning Code shall be granted unless the applicant shall establish that carrying out the strict letter of the provisions of Zoning Code would create a particular hardship or a practical difficulty. Such a showing shall require proof that the variation being sought satisfies each of the standards set forth below.

The use of the property for a fleet maintenance garage does not require as much parking as another use of the property might. There are only seven full time and one part time employee at the site. Vehicles are dropped off or picked up by staff. The facility is not open to the general public and most visitors are other Village staff or vendors. The total spaces needed is over parking of the site compared to the use.

(b) Unique Physical Condition. The subject property is exceptional as compared to other lots subject to the same provision by reason of a unique physical condition, including presence of an existing use, structure or sign, whether conforming or nonconforming; irregular or substandard shape or size; exceptional topographical features; or other extraordinary physical conditions peculiar to and inherent in the subject property that amount to more than a mere inconvenience to the owner and that relate to or arise out of the lot rather than the personal situation of the current owner of the lot.

The size of the lot does pose some difficulties with the size and access to the rear of the property which provides access to the warehouse area. The Village's Fire Engines and Public Works Specialty vehicles can be in excess of 50'. With the lot size and larger vehicles sizes we were limited for circulation on the property and the adjacent parking. We attempted to keep as much parking as possible but the access and circulation necessitated the reduction.

(c) Not Self-Created. The aforesaid unique physical condition is not the result of any action or inaction of the owner or his predecessors in title and existed at the time of the enactment of the provisions from which a variation is sought or was created by natural forces or was the result of governmental action, other than the adoption of the Zoning Code, for which no compensation was paid.

The village did not create this condition of the lot, and it has been in the same configuration since the subdivision was created.

(d) Denied Substantial Rights. The carrying out of the strict letter of the provision from which a variation is sought would deprive the owner of the subject property of substantial rights commonly enjoyed by owners of other lots subject to the same provision.

If the parking variations are not approved, it would impact the circulation and access to the property. Attempting to add more spaces would require either limited use of the property or the reduction the limited greenspace in the front of the property which would need to be considered for parking instead but may cause additional zoning issues.

(e) Not Merely Special Privilege. The alleged hardship or difficulty is not merely the inability of the owner or occupant to enjoy some special privilege or additional right not available to owners or occupants of other lots subject to the same provision, nor merely an inability to make more money from the sale of the subject property; provided, however, that where the standards herein set out exist, the existence of an economic hardship shall not be a prerequisite to the grant of an authorized variation.

The location of the fleet garage is essential for providing vehicle services to the fleet which provides services to the residents and business. The location of the proposed fleet garage is in a good location for the accessibility of vehicles and the use is consistent for the area. In this case the IB district requirements are greater than the size of the property but our intended use works.

(f) Code and Plan Purposes. The variation would not result in a use or development of the subject property that would not be in harmony with the general and specific purposes for which the Zoning Code and the provision from which a variation is sought were enacted or the general purpose and intent of the Official Comprehensive Plan.

The parking variations that are being requested would not impact on the use of other properties. The changes are interior of the lot and visible. There would be no concern or overflow parking due to the use of the property.

(g) Essential Character of the Area. The variation would not result in a use or development on the subject property

1. Would be materially detrimental to the public welfare or materially injurious to the enjoyment, use, development value of property or improvements permitted in the vicinity.

   The use improves the value of the property in the vicinity by the Village's investment.

2. Would materially impair an adequate supply of light and air to the properties and improvements in the vicinity.

   The adaptive reuse of the property does not substantially change the building envelope; there is only a small addition being built.

3. Would substantially increase congestion in the public streets due to traffic or parking.

   The current use has more visitors, employees and ongoing activities than the proposed use of the fleet garage.

4. Would unduly increase the danger of flood or fire;

   The property would provide suitable stormwater management, and the new facility would have improved fire suppression systems.

5. Would unduly tax public utilities and facilities in the area; or

   The use would not impact utilities in the area.

6. Would endanger the public health or safety.

   The facility would help improve the services provided by Fleet Maintenance by addressing operational deficiencies that exist in the current garage.

1 of 1

CCH1240365 7LD DC

THIS INSTRUMENT WAS PREPARED BY AND AFTER RECORDING RETURN TO:
Lisa Starcevich
Elrod Friedman LLP
325 North LaSalle Street, Suite 450
Chicago, Illinois 60654

Doc#. 2429020509 Fee: $107.00
CEDRIC GILES
COOK COUNTY CLERK'S OFFICE
Date 10/16/2024 3:58 PM Pg: 1 of 6

Dec ID 20241001618928
ST/Co Stamp 0-705-029-296 ST Tax $0.00 CO Tax $0.00

(Space reserved for recording data.)

SPECIAL WARRANTY DEED

THIS INDENTURE, made as of this 15 day of October, 2024, between **GLENKIRK**, an Illinois not-for-profit corporation ("**Grantor**"), having an address of 3504 Commercial Avenue, Northbrook, Illinois 60062 and the **VILLAGE OF NORTHBROOK**, an Illinois home-rule municipal corporation ("**Grantee**"), having an address of 1225 Cedar Lane, Northbrook, Illinois 60062.

WITNESSETH, that, Grantor, for and in consideration of the sum of TEN DOLLARS ($10.00), and other good and valuable consideration, the receipt and sufficiency of which is hereby acknowledged, has granted, bargained and sold, and by these presents does convey, grant, bargain and sell to Grantee, and its successors and assigns forever, that certain land, situate, lying and being in the County of Cook, State of Illinois commonly known as 3504 Commercial Avenue, Northbrook, Illinois 60062 and being more particularly described in **Exhibit A** attached hereto and made a part hereof (collectively, the "**Property**").

TOGETHER WITH all tenements, hereditaments and appurtenances thereto, belonging or in anywise appertaining.

AND SUBJECT TO those matters as contained in **Exhibit B** attached hereto and made a part hereof.

TO HAVE AND TO HOLD the Property, with the appurtenances, in fee simple, unto Grantee, its successors and assigns, to its own proper use and benefit forever.

AND GRANTOR, for itself and for its successors and assigns, does specially warrant the title to the Property and will defend the same against the lawful claims (other than those set forth on Exhibit B) of all persons claiming by, through or under Grantor, but not otherwise.

IN WITNESS WHEREOF, Grantor has caused this instrument to be executed as of the day and year first above written.

GLENKIRK,
an Illinois not-for-profit corporation

By: Kim Berenberg
Kim Berenberg
Chief Executive Officer

STATE OF ILLINOIS)
) SS:
COUNTY OF ~~COOK~~ Lake)

Before me, a Notary Public in and for said County and State, personally appeared Kim Berenberg, by me known and by me known to be the Chief Executive Officer of Glenkirk, an Illinois not-for-profit corporation, who acknowledged the execution of the foregoing "Special Warranty Deed" on behalf of said corporation.

WITNESS my hand and Notarial Seal this 04 day of October, 2024.

Notary Public

Manhar Kapadia
Printed Signature

My Commission Expires: 03/09/26

My County of Residence: Cook

MANHAR KAPADIA
OFFICIAL SEAL
Notary Public - State Of Illinois
Commission No. 948154
My Commission Expires 09 March 2026

Exempt under provision 35 ILCS 200/31-45(b) of the Illinois Real Estate Transfer Tax Act.

10/09/2024 Cathryn D. Ing
Date Grantor/Grantee/Representative

Send tax bills to:
Village of Northbrook
1225 Cedar Lane
Northbrook, Illinois 60062

EXHIBIT A

LEGAL DESCRIPTION OF THE PROPERTY

LOT 7 IN ADDITION TO LOTS 7, 10 AND 11 IN NORTHBROOK EDENS INDUSTRIAL PARK SUBDIVISION UNIT NUMBER 1, A SUBDIVISION OF PART OF THE SOUTHWEST 1/4 OF THE NORTHWEST 1/4 OF SECTION 5 AND PART OF THE SOUTH EAST 1/4 OF THE NORTHEAST 1/4 OF SECTION 6, TOWNSHIP 42 NORTH, RANGE 12, EAST OF THE THIRD PRINCIPAL MERIDIAN, ACCORDING TO PLAT RECORDED DECEMBER 22, 1966 AS DOCUMENT NO. 20028467 IN COOK COUNTY, ILLINOIS.

Commonly known as: 3504 Commercial Avenue, Northbrook Illinois 60062

PIN:04-05-102-010-0000

EXHIBIT B

PERMITTED EXCEPTIONS

1. 2024 real estate taxes and subsequent years, not due and payable for the Property.

2. Building Line shown on the Plat recorded as Document Number 19336338 as follows: 30 feet from the South Line.

3. Easement for public utilities shown on the Plat recorded as Document Number 20028467 over the North 10 feet.

4. Unrecorded Electric Service Station Agreement dated August 25, 1976 by Flinn & Dreffein Engineering Co. and from the Commonwealth Edison Company, as Number N6-032N, disclosed by the Commonwealth Edison company letter dated August 29, 1988 from Don L. Lawrence.

STATEMENT BY GRANTOR AND GRANTEE

The grantor or his/her agent affirms that, to the best of his/her knowledge, the name of the grantee as shown on the deed or assignment of beneficial interest in a land trust is either a natural person, an Illinois corporation or foreign corporation authorized to do business or acquire and hold title to real estate in Illinois, a partnership authorized to do business or acquire and hold title to real estate in Illinois, or other entity recognized as a person and authorized to do business or acquire title to real estate under the laws of the State of Illinois.

Dated this 4th day of October, 2024.

Signature: Kim Brenberg
Grantor or Agent

SUBSCRIBED and SWORN to before me by said Grantor this 4th day of October, 2024.

M. K. Kapadia
Notary Public

MANHAR KAPADIA
OFFICIAL SEAL
Notary Public - State Of Illinois
Commission No. 948154
My Commission Expires 09 March 2026

The grantee or his/her agent affirm and verifies that the name of the grantee as shown on the deed or assignment of beneficial interest in a land trust is either a natural person, an Illinois corporation or foreign corporation authorized to do business or acquire and hold title to real estate in Illinois, a partnership authorized to do business or acquire and hold title to real estate in Illinois, or other entity recognized as a person and authorized to do business or acquire and hold title to real estate under the laws of the State of Illinois.

Dated this _____ day of _____, 2024.

Signature: _____
Grantee or Agent

SUBSCRIBED and SWORN to before me by said Grantee this ____ day of _____, 2024.

_____
Notary Public

NOTE: Any person who knowingly submits a false statement concerning the identity of a grantee shall be guilty of a Class C misdemeanor for the first offense and of a Class A misdemeanor for subsequent offenses.

[Attach to deed or ABI to be recorded in Cook County, Illinois, if exempt under provisions of Section 4 of the Illinois Real Estate Transfer Tax Act.]

STATEMENT BY GRANTOR AND GRANTEE

The grantor or his/her agent affirms that, to the best of his/her knowledge, the name of the grantee as shown on the deed or assignment of beneficial interest in a land trust is either a natural person, an Illinois corporation or foreign corporation authorized to do business or acquire and hold title to real estate in Illinois, a partnership authorized to do business or acquire and hold title to real estate in Illinois, or other entity recognized as a person and authorized to do business or acquire title to real estate under the laws of the State of Illinois.

Dated this _____ day of _____, 2024.

Signature: _____
Grantor or Agent

SUBSCRIBED and SWORN to before me by said Grantor this ____ day of _____,2024.

_____
Notary Public

The grantee or his/her agent affirm and verifies that the name of the grantee as shown on the deed or assignment of beneficial interest in a land trust is either a natural person, an Illinois corporation or foreign corporation authorized to do business or acquire and hold title to real estate in Illinois, a partnership authorized to do business or acquire and hold title to real estate in Illinois, or other entity recognized as a person and authorized to do business or acquire and hold title to real estate under the laws of the State of Illinois.

Dated this 10 day of October, 2024.

Signature: _____
Grantee or Agent

SUBSCRIBED and SWORN to before me by said Grantee this 10 day of October, 2024.

_____
Notary Public

OMAR M SHEIKH
Official Seal
Notary Public - State of Illinois
My Commission Expires Jul 25, 2026

NOTE: Any person who knowingly submits a false statement concerning the identity of a grantee shall be guilty of a Class C misdemeanor for the first offense and of a Class A misdemeanor for subsequent offenses.

[Attach to deed or ABI to be recorded in Cook County, Illinois, if exempt under provisions of Section 4 of the Illinois Real Estate Transfer Tax Act.]

Village of Northbrook – Fleet Maintenance Garage

Proposed Use & Operations

DESCRIPTION OF EXISITNG PROPERTY

The property is roughly 69,000 square feet and has a building that has 31,000 square feet of space. The current use provides a wide range of services for individuals with intellectual and developmental.

DESCRIPTION OF PROPOSED USE OF PROPERTY

The property will be an adaptive reuse for the Village of Northbrook's Fleet Maintenance Garage. The Fleet Maintenance Garage provides services for all the Village's fleet and equipment. The Fleet Maintenance Garage is a critical facility for all operations of the Village.

DESCRIPTION OF PROPOSED CHANGES TO THE PROPERTY

The property will undergo a major renovation of the interior space and the exterior site. The existing office space will have a major renovation to provide office, conference room, breakroom, locker room, work-out area and support areas for the fleet maintenance operations. The existing warehouse will be converted to a fleet maintenance garage. The project includes roughly 1,000 square feet of new space which is primarily the area of a new elevator. The site will be completely rebuilt with new stormwater detention, site utilities, access drive and parking lot. The facility will be upgraded to meet all current building codes and ADA requirements. There will also be substantial improvements to building envelope and system so that the new facility will meet the Climate Action Plan goals of the Village.

With the proposed property improvements above, we are seeking a rezoning to the IB District. This rezoning will be like all the other Village of Northbrook properties and will accommodate the adaptive reuse of the property for a governmental activity facility for the purpose of Fleet Maintenance Garage used for automotive repairs and offices. This request will also require an amendment to the Comprehensive Land Use Map and a series of Zoning Code amendments.

HOURS OF OPERATION

Normal hours of operation are 7:00 a.m. to 3:00 p.m. Monday to Friday. There is emergency or after-hour work requirements as needed.

NUMBER OF EMPLOYEES

The facility will be staffed by 7 full-time employees and 1 part-time employee.

NUMBER OF EXISITNG AND PROPOSED PARKING SPACES

Existing Parking: 35

Proposal: Parking: 27 (with 2 ADA)

OTHER TENANTS

None.

PROPOSED OUTDOOR ACTIVITY

Limited to the parking and moving of vehicles to be serviced within the building.

Sustainability Responses:

Northbrook's Climate Action Plan (CAP) aims to promote sustainability and reduce community-wide carbon emissions by 80% by the year 2050 through strategic planning and the implementation of targeted action items. Follow the adoption of the CAP, development proposals are reviewed based on the adherence to established environmental best practices. To support this effort, relevant CAP action items should be considered during the preliminary review process. These items serve as guidance to align the proposed developments with the Village's long-term climate goals.

This property is owned by the Village of Northbrook. Several of the items outlined below were the subject of prior discussion by the Board of Trustees at both the Committee of the Whole and Board of Trustees meetings held on April 22, 2025. Items that were part of these discussion are marked with an asterisk (*). These prior discussions offered guidance on several key design elements and help inform the current review process.

Transportation and Land Use
In the Transportation and Land Use section of the CAP, recommendations are made to enhance active mobility and fossil fuel-free transit:

TL 5-2 Consider including wiring capacity to charge electric vehicles.

The Village has designed the facility so that it can support EV charging and is reviewing options for standardized stations to be used at this facility but also other Village facilities.

Buildings and Energy
The Building Energy section of the CAP provides the following items pertaining to reducing our community-
wide carbon footprint and preserving wildlife:

BE 1- 1 Use this Village facility to showcase clean energy systems and promote the technical and financial information needed to support broader scale adoption. Conduct a renewable energy potentials assessment for facility.*

The design of the building will meet the goals established by the Board of Trustees at both the Committee of the Whole and Board of Trustees meetings held on April 22, 2025.

BE 2- 1 Consider conducting a Solar PV Site Assessment. Assessment should include estimated installation cost, and projections for both energy generation potential and economic payback potential over a minimum 20-year timeframe. If installation will not be realized, confirm reserved space for solar-ready roof zone and plan for structural design loads and electrical service to allow for future installation of a dual pole circuit breaker if possible.*

The review of options for solar were considered for this building at Committee of the Whole and Board of Trustees meetings held on April 22, 2025. It was determined that the existing roof structure over the warehouse could not support solar installation and the flat roof over the office space will not provide suitable sunlight or enough panels to be viable.

BE 5- 1 Explore opportunities for the property to utilize smart lights that can save energy through conservation. Achieve 100% LED installation if possible.

The facility has been designed so that all the lights will be LED and be managed for energy conservation.

BE 5- 4 Require purchase and installation of ENERGY STAR appliances when available

The Village will attempt to use ENERGY STAR appliances whenever possible.

BE 7- 2 Consider the benefits of replacing fossil fuel burning heating equipment and with air-source heat-pumps, or other efficient electric heating options in development. Strive for zero on-site fossil fuel combustion with air-source heat-pumps, geo-thermal systems, solar thermal, electric cooktops, etc.*

The design of the building will meet the goals established by the Board of Trustees at both the Committee of the Whole and Board of Trustees meetings held on April 22, 2025, and included a geothermal well system and be an all-electric building.

Waste Management

The CAP points to procedures that may facilitate waste reduction (with a goal of at least 50% landfill wasted diverted by 2030) in its Waste Management section:

WM 2- 5 Assure compliance with the Cook County Construction & Demolition Debris Diversion Ordinance, and encourage contractors and subcontractors to exceed minimum requirements, where demolition occurs.

This will be coordinated during interior demolition.

WM 2- 7 Consider offering recycling and compost collection services.

The facility has been designed to include both recycling and composting receptacles.

Water and Wastewater
In the Water and Wastewater category, the CAP states to prioritize mitigating stormwater before it enters the
sewer system through multiple capture techniques:

WW 1- 2 Reduce landscaping water use with water-efficient irrigation systems, grass replacement, and planting native and drought-resistant trees and vegetation in landscaping plans.

The landscaping plan will emphasize the use of native plantings and drought-resistant trees and vegetation. Staff is looking to install a butterfly garden in the front. There will be no irrigation system.

WW 1- 3 Evaluate the potential for installation of rainwater collection systems at Village facilities for graywater uses, and investigate opportunities for graywater reuse at existing and new Village facilities and properties.

These items were not incorporated into the plan.

WW 1- 4 Consider utilizing water conservation programs that focus on outdoor irrigation, which may also support better identification of water-related carbon sequestering opportunities such as using soil amendments, native grasses and proper tree watering.

The landscaping plan will emphasize the use of native plantings and drought-resistant trees and vegetation. There will be no irrigation system.

WW 2- 1 Prioritize managing stormwater before it enters the sewer system through a combination of overland flow, detention, and infiltration strategies (for example, permeable surfaces) where feasible.*

The design of the building will meet the goals established by the Board of Trustees at both the Committee of the Whole and Board of Trustees meetings held on April 22, 2025.

WW 3- 3 Reduce or offset impervious surfaces where possible and consider use of lighter colored pavements and building materials to lessen the impact of urban heat island effect.

This will be taken under advisement.

Greenspace and Ecosystem Health
The Plan's Greenspace category includes the following for expansion of tree canopy coverage, transforming beneficial lawns, and mitigation of heat island impacts:

GS 2- 5 Consider including exterior lighting design to protect native plants, species, biodiversity, and improve night sky quality.

This will be taken under advisement.

GS 1- 12 Plan for diversity of native tree cover and performance-based tree island within landscaping plan and parking lots with goals on percentage of pavement shaded. Consider a mix of canopy trees, shrubs, groundcovers, and raingarden components appropriate to the lot and its surroundings in any new landscaping where possible.

The landscaping plan will emphasize take this goal into consideration.

8/22/2025

Kelly Hamill
Village of Northbrook
1225 Cedar Ln
Northbrook, IL 60062

Subject: Village of Northbrook – Planning Comments – Fleet Maintenance Facility
FGMA Job #25-4189.01

Dear Mr. Hamill,

The Village of Northbrook Development and Planning Department has provided initial comments regarding the site plan for the Fleet Maintenance project. Please see FGMA's responses below:

1. Item 1:
    a. This item is not directly applicable to FGM Architects.
2. Item 2:
    a. See Drawings in Appendix B.
3. Item 3:
    a. There is no longer a sign planned to be installed as a part of the project scope of work. A sign is intended to be installed in the future, but just not with this project. That being said, the masonry wall where a sign is anticipated to be installed has been dimensioned as can be seen in the Drawings in Appendix B.
4. Item 4:
    a. At this time, there is not the plan to provide any formal signage as a part of the project. This scope of work change occurred after the development of the set of drawings that were reviewed. That being said, the Drawings in Appendix B do provide a dimension from the property line to the face of the masonry wall where a future sign is anticipated to be installed.
5. Item 5:
    a. Understood.

Sincerely,

Chris Grandy, AIA | Architect, Project Manager
ChristopherGrandy@fgmarchitects.com

cc:

Enclosure(s):

Exhibit A – Village Development and Planning Department Review Items – Dated for 8/21/25.
Exhibit B – Plan Commission Drawings, Fleet Maintenance Facility

UNITED SURVEY SERVICE, LLC
CONSTRUCTION AND LAND SURVEYORS
7710 CENTRAL AVENUE, RIVER FOREST, IL 60305
TEL.: (847) 299 - 1010 FAX : (847) 299 - 5887
E-MAIL: USURVEY@USANDCS.COM

ALTA / NSPS LAND TITLE SURVEY

OF

LOT 7 IN ADDITION TO LOTS 7, 10 AND 11 IN NORTHBROOK EDENS INDUSTRIAL PARK SUBDIVISION UNIT NUMBER 1, A SUBDIVISION OF PART OF THE SOUTHWEST 1/4 OF THE NORTHWEST 1/4 OF SECTION 5 AND PART OF THE SOUTH EAST 1/4 OF THE NORTHEAST 1/4 OF SECTION 6, TOWNSHIP 42 NORTH, RANGE 12, EAST OF THE THIRD PRINCIPAL MERIDIAN, ACCORDING TO PLAT RECORDED DECEMBER 22, 1966 AS DOCUMENT NO. 20028467 IN COOK COUNTY, ILLINOIS

KNOWN AS: **3504 COMMERCIAL AVENUE, NORTHBROOK, ILLINOIS**

PERMANENT INDEX NUMBER: 04 - 05 - 102 - 010 - 0000

AREA = 69,000 SQ. FT. OR 1.584 ACRES

NOTE:
THIS LEGAL DESCRIPTION DESCRIBES THE SAME PROPERTY AS INSURED IN THE TITLE COMMITMENT AND ANY EXCEPTIONS HAVE BEEN NOTED HEREIN.

LOCATION MAP



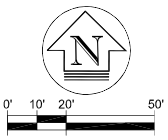

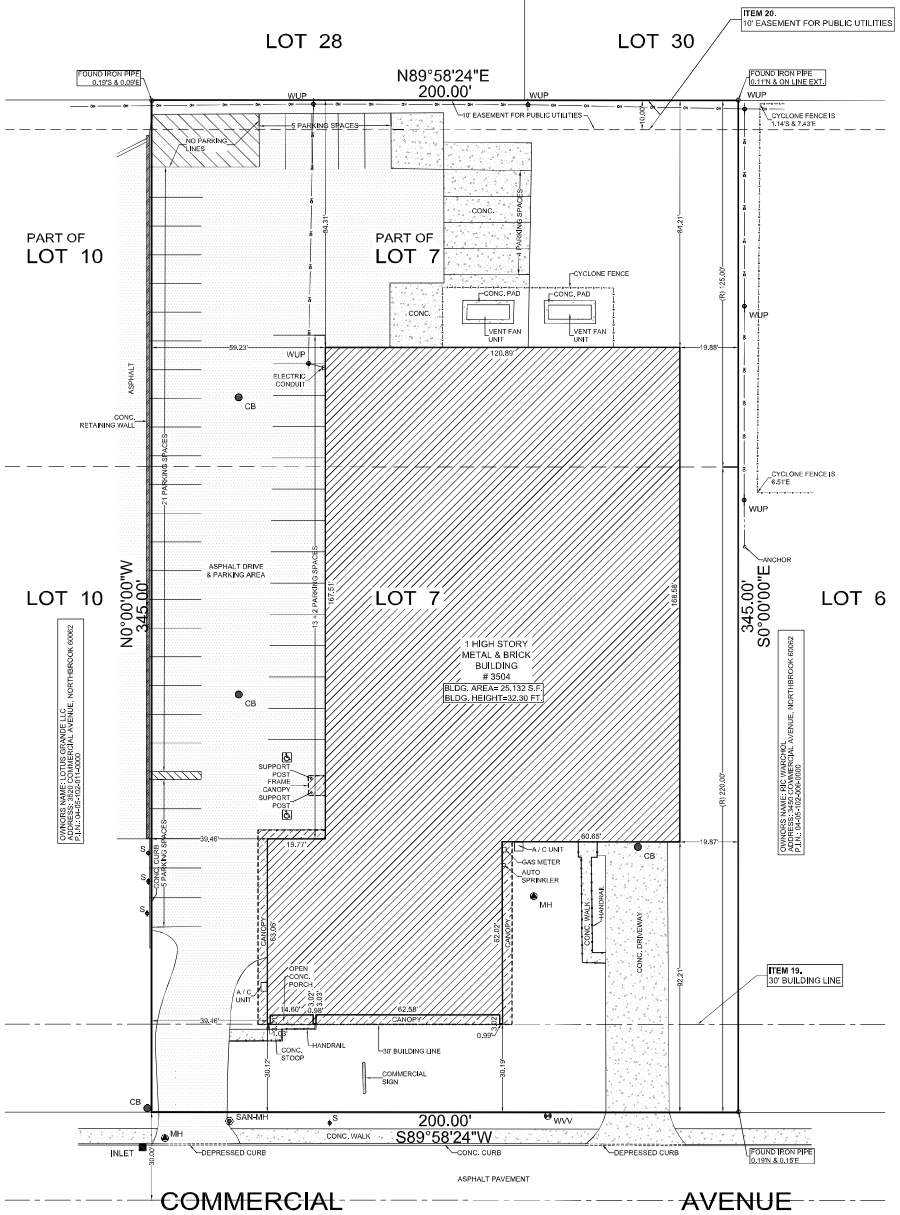

PARKING SPACE TABLE	
TYPE OF SPACE	TOTAL EXISTING
REGULAR	43
HANDICAP	2
TOTAL	45

NOTES:

-THE SUBJECT PROPERTY HAS ACCESS TO AND FROM A DULY DEDICATED AND ACCEPTED PUBLIC STREET KNOWN AS **COMMERCIAL AVENUE**

-THE SURVEY AND THE INFORMATION, COURSES AND DISTANCES SHOWN THEREON ARE CORRECT;

-THE TITLE LINES AND LINES OF ACTUAL POSSESSION ARE THE SAME;

-THE SUBJECT PROPERTY DOES NOT SERVE ANY ADJOINING PROPERTY FOR DRAINAGE, UTILITIES, OR INGRESS OR EGRESS;

- ELECTRIC, GAS, TELEPHONE AND WATER UTILITY AND STORM AND SANITARY SEWER SYSTEMS ACCESS THE PROPERTY IN LEGALLY DEDICATED RIGHTS OF WAY THAT BENEFIT THE PROPERTY.

- THERE ARE NO VISIBLE EVIDENCE OF CEMETERIES, GRAVE SITES OR BURIAL GROUNDS LOCATED ON THE PROPERTY.

- THERE ARE NO VISIBLE EVIDENCE OF USE OF THE SITE AS A DUMP, SUMP OR SANITARY LANDFILL.

- ITEM # 8 FROM TABLE A
ALL SUBSTANTIAL FEATURES OBSERVED ON THE PROPERTY HAVE BEEN PLOTTED.

- ITEM # 9 FROM TABLE A
THERE ARE **45** STRIPED PARKING SPACES ON THE PROPERTY.

- ITEM # 10 FROM TABLE A
THERE ARE NO PARTY WALLS (ALL WALLS ARE INDEPENDENT).

- ITEM # 11 FROM TABLE A
ALL VISIBLE UTILITIES ARE PLOTTED.

- ITEM # 16 FROM TABLE A
AT THE TIME OF THIS SURVEY, NO VISIBLE RECENT EARTH MOVING WORK, BUILDING CONSTRUCTION OR BUILDING ADDITIONS WITHIN RECENT MONTHS WERE NOTED.

- ITEM # 17 FROM TABLE A
AT THE TIME OF THIS SURVEY, THERE IS NO EVIDENCE OF CHANGES IN RIGHT OF WAY EITHER COMPLETED OR PROPOSED AND RECENT STREET OR SIDEWALK CONSTRUCTION OR REPAIRS.

- ITEM # 18 OF TABLE A
THERE IS NOT OFFSITE BENEFICIAL EASEMENTS WERE REFLECTED IN TITLE.

- ITEM # 19 FROM TABLE A
RELATING TO PROFESSIONAL LIABILITY INSURANCE POLICY OBTAINED BY THE SURVEYOR IN THE MINIMUM AMOUNT OF $ 1,000,000 TO BE IN EFFECT THROUGHOUT THE CONTRACT TERM. CERTIFICATE OF INSURANCE TO BE FURNISHED UPON REQUEST.

CHICAGO TITLE INSURANCE COMPANY

COMMITMENT NO.: **CCHI2403657LD**
EFFECTIVE DATE: **JULY 25, 2024**

ITEMS CORRESPONDING TO SCHEDULE B, PART II:

ITEMS 1 - 18.
NOT SURVEY RELATED.

ITEM 19.
BUILDING LINE SHOWN ON THE PLAT RECORDED AS DOCUMENT NUMBER 19336338 AS FOLLOWS:
30 FEET FROM THE SOUTH LINE.
(PLOTTED ON THE DRAWING)

ITEM 20.
EASEMENT FOR PUBLIC UTILITIES SHOWN ON THE PLAT RECORDED AS DOCUMENT NUMBER 20028467 OVER THE NORTH 10 FEET.
(PLOTTED ON THE DRAWING)

ITEMS 21 - 24.
NOT SURVEY RELATED.

VILLAGE OF NORTHBROOK
1225 CEDAR LANE
NORTHBROOK, IL 60062
PHONE: 847-272-5600

ZONING CLASSIFICATION:
I1 : RESTRICTED INDUSTRIAL

LEGEND	ABBREVIATIONS
SAN-MH	SANITARY MANHOLE
CB	CATCH BASIN
INLET	INLET
WVV	WATER VALVE VAULT
WUP	WOOD UTILITY POLE
MH	MANHOLE
SIGN	SIGN
	HANDICAPPED PARKING SPACE
(R)	RECORD DATA

ORDERED BY: ROBBINS DIMONTE, LTD.	
SCALE : 1" = 20'	
DATE : AUGUST 7, 2024	
FILE No.: 2024 - 31701	8-16-24 REVISED
	DATE REVISION

FLOOD STATEMENT:

SAID DESCRIBED PROPERTY IS LOCATED WITHIN AN AREA HAVING A ZONE DESIGNATION **"X" -** AREAS DETERMINED TO BE OUTSIDE THE 0.2% ANNUAL CHANCE FLOODPLAIN BY THE SECRETARY OF HOUSING AND URBAN DEVELOPMENT, ON FLOOD INSURANCE RATE MAP **17031 C 0088 J**, WITH A DATE OF IDENTIFICATION OF **AUGUST 19 2008**, FOR COMMUNITY NUMBER **170132 0088 J**, IN COOK COUNTY, STATE OF ILLINOIS, WHICH IS THE CURRENT FLOOD INSURANCE RATE MAP FOR THE COMMUNITY IN WHICH SAID PROPERTY IS SITUATED.

STATE OF ILLINOIS)
) SS
COUNTY OF COOK)

I **ROY G. LAWNICZAK**, A REGISTERED LAND SURVEYOR, **LICENSE NO. 35-2290**, IN AND FOR THE STATE OF ILLINOIS AND LEGALLY DOING BUSINESS IN COOK COUNTY, DO HEREBY CERTIFY TO:

- GLENKIRK, AN ILLINOIS NOT-FOR-PROFIT CORPORATION

- VILLAGE OF NORTHBROOK

- CHICAGO TITLE INSURANCE COMPANY

AND TO THEIR SUCCESSORS AND ASSIGNS, THAT:

THIS IS TO CERTIFY THAT THIS MAP OR PLAT AND THE SURVEY ON WHICH IT IS BASED WERE MADE IN ACCORDANCE WITH **2021 MINIMUM STANDARD DETAIL REQUIREMENTS FOR ALTA / NSPS LAND TITLE SURVEYS JOINTLY ESTABLISHED AND ADOPTED BY ALTA AND NSPS**, AND INCLUDES ITEMS 1, 2, 3, 4, 6(b), 7(a), 7(b)(1),7(c), 8, 9, 10(a), 11(a), 13,15, 17, 18 AND 19 OF TABLE A THEREOF.

THE FIELD WORK WAS COMPLETED ON AUGUST 7, 2024.

DATE OF PLAT: AUGUST 16, 2024

ROY G. LAWNICZAK 35-002290 PROFESSIONAL LAND SURVEYOR STATE OF ILLINOIS CHICAGO, IL

BY: _____
ROY G. LAWNICZAK, REGISTERED ILLINOIS LAND SURVEYOR NO. 35-2290
LICENSE EXPIRES: NOVEMBER 30, 2024
PROFESSIONAL DESIGN FIRM LICENSE NO.: 184-004576
LICENSE EXPIRES: APRIL 30, 2025

GENERAL DEMOLITION NOTES

1. REFER TO G-SERIES SHEETS FOR TYPICAL ABBREVIATIONS, SYMBOLS & TAGS.
2. CONTRACTOR TO NOTE THAT NOT ALL KEYNOTES ARE NECESSARILY SHOWN ON EVERY SHEET, EVEN IF THE SCOPE OF WORK ASSOCIATED WITH A KEYNOTE IS VISIBLE ON A SHEET. COORDINATE BETWEEN ALL SHEETS FOR THE FULL PROJECT SCOPE OF WORK.
3. VERIFY LOCATION AND CONDITION OF WALLS, CEILINGS, FLOORS, EQUIPMENT, FIXTURES AND ALL INCIDENTAL ACCESSORIES, PRIOR TO DEMOLITION. REPORT DISCREPANCIES BETWEEN THE CONSTRUCTION DOCUMENTS AND EXISTING CONDITION TO THE ARCHITECT/ENGINEER.
4. DO NOT BLOCK EXITS AND EXIT PASSAGE WAYS. MAINTAIN EXITS AS INDICATED, AND IF NOT INDICATED, MAINTAIN AT LEAST TWO EXITS OUT OF ALL AREAS IN ACCORDANCE WITH LOCAL JURISDICTION, AT ALL TIMES DURING DEMOLITION.
5. PRIOR TO ANY DEMOLITION OPERATION, SHORE AND PROTECT ADJACENT BUILDING AREA SO AS TO MAINTAIN THE STRUCTURAL INTEGRITY AND STABILITY OF THE PORTIONS OF THE BUILDING TO REMAIN.
6. PROTECT ADJACENT SURFACES TO REMAIN. REPAIR DAMAGED SURFACES SCHEDULED TO REMAIN USING MATERIALS AND METHODS TO MATCH EXISTING CONSTRUCTION.
7. REMOVE ALL WALLS AND PARTITIONS SCHEDULED TO BE REMOVED INCLUDING ALL INCIDENTAL ACCESSORIES THEREIN, INCLUDING BUT NOT LIMITED TO ELECTRICAL MECHANICAL AND PLUMBING APPURTENANCES AND ALL CONDUIT, WIRING AND PIPING.
8. REMOVE CONDUIT, WIRING AND PIPING NOT SCHEDULED TO BE RE-ROUTED, TO NEAREST POINT CONCEALED BEHIND CONSTRUCTION TO REMAIN, AND CAP ENDS.
9. REMOVE ALL DEBRIS FROM SITE ON A DAILY BASIS AND DISPOSE OF LEGALLY.
10. DASHED LINES INDICATE MATERIAL TO BE REMOVED. REMOVE CONSTRUCTION UP TO DEFINED LIMITS. REFER TO SHEET KEY NOTES FOR ADDITIONAL SPECIFIC INFORMATION.
11. IF REQUIRED, OWNER'S ABATEMENT CONTRACTOR TO PERFORM ASBESTOS ABATEMENT OR OTHER HAZARDOUS OR TOXIC SUBSTANCE REMOVAL WORK INDICATED. IN ACCORDANCE WITH SPECIFICATIONS AND WITH AUTHORITIES HAVING JURISDICTION, PRIOR TO STARTING GENERAL DEMOLITION ACTIVITIES.
12. FOR DETAILED CIVIL DEMOLITION NOTES, REFER TO CIVIL DRAWINGS.
13. FOR DETAILED MECHANICAL DEMOLITION NOTES, REFER TO MECHANICAL DRAWINGS.
14. FOR DETAILED PLUMBING AND FIRE PROTECTION DEMOLITION NOTES, REFER TO PLUMBING AND FIRE PROTECTION DRAWINGS.
15. FOR DETAILED ELECTRICAL DEMOLITION NOTES, REFER TO ELECTRICAL DRAWINGS.
16. THE EXISTING GARAGE STRUCTURAL FRAME SYSTEM IS INTENDED TO SUBSTIANTIALLY REMAIN, UNLESS OTHERWISE NOTED OR REQUIRED TO BE REMOVED/MODIFIED IN RESPONSE TO THE DEMO AND NEW SCOPES OF WORK (THIS IS ALSO INCLUSIVE OF THE EXISTING SECONDARY FRAMING, THE WALL Z-GIRTS, ROOF PURLINS, LATERAL SUPPORT SYSTEM AND OTHER MEMBERS). CONTRACTOR TO COORDINATE WITH EXISTING CONDITIONS.
17. CONTRACTOR MUST GO ON SITE AND REVIEW CONDITIONS. NOT NECESSARILY ALL ITEMS HAVE BEEN INDICATED ON THESE DEMO PLANS. THE INTENT OF THE PROJECT IS TO COMPLETELY REMOVE AND REPLACE THE EXISTING MECHANICAL, ELECTRICAL, PLUMBING, FIRE PROTECTION, ETC. SYSTEMS IN THE BUILDING.
18. EXISTING BUILDING IS A MIXTURE OF STUD/GYPSUM BOARD PARTITIONS AND CMU/MASONRY PARTITIONS (SOME ARE VISIBLE IN THE ROOMS AND OTHER AREAS REQUIRE REVIEW ABOVE THE CEILING IN ORDER TO SEE WHERE FURRED-OUT AREAS ARE). WHERE MASONRY PARTITIONS HAVE BEEN MODIFIED/REMOVED WHERE THEY WERE CONNECTED TO/ADJACENT TO OTHER EXISTING MASONRY CONSTRUCTION, CONTRACTOR IS TO PATCH/REPAIR THE EXISTING MASONRY SCHEDULED TO REMAIN AS REQ'D TO RETURN TO LIKE NEW CONDITION. THE WORK MAY INCLUDE TOOTHING-IN NEW MASONRY INTO EXISTING COURSING.

DEMOLITION LEGEND

- EXISTING WALL, PARTITION OR ITEM TO REMAIN
- EXISTING WALL, PARTITION, AND/OR EXISTING CONSTRUCTION TO BE DEMOLISHED - REFER TO KEYED NOTES FOR ADDITIONAL SCOPE OF WORK INFORMATION, WHERE APPLICABLE.
- EXISTING DOOR, FRAME AND HARDWARE TO REMAIN (DOUBLE DOOR SHALL APPEAR SIMILAR)
- EXISTING DOOR, FRAME AND HARDWARE TO BE DEMOLISHED (DOUBLE DOOR SHALL APPEAR SIMILAR) REFER TO KEYED NOTES FOR ADDITIONAL SCOPE OF WORK INFORMATION, WHERE APPLICABLE.
- EQUIPMENT OR FIXTURE TO BE DEMOLISHED. SIZE AND SHAPE MAY VARY - REFER TO KEYED NOTES FOR ADDITIONAL SCOPE OF WORK INFORMATION, WHERE APPLICABLE.
- ITEM SHOWN ON DEMOLITION SHEETS WITH A DASHED LINE SHALL INDICATE ITEM TO BE REMOVED. REFER TO KEYED NOTES FOR ADDITIONAL SCOPE OF WORK INFORMATION, WHERE APPLICABLE.

DEMO PLAN KEYED NOTES

TAG	DESCRIPTION
DS1	REMOVE EXISTING PAVEMENT SYSTEM AND BASE IN ITS ENTIRETY AS REQUIRED TO ACCOMMODATE THE NEW SCOPE OF WORK. EXCAVATE/MODIFY THE GRADES AS REQUIRED TO ACCOMODATE THE NEW SCOPE OF WORK. CONTRACTOR IS RESPONSIBLE TO ENSURE THAT DURING THE COURSE OF DEMOLITION AND REMOVAL THAT EXISTING CONSTRUCTION SCHEDULED TO REMAIN IS PROTECTED FROM DAMAGE AND UNDERMINING.
DS2	EXISTING RETAINING WALL SYSTEM TO REMAIN. PROTECT DURING CONSTRUCTION AND REPAIR ANY AREAS DAMAGED.
DS3	REMOVE EXISTING UTILITY POLE AND ASSOCIATED TRANSFORMERS. WIRING (BOTH INTO THE BUILDING AND CONNECTING BACK TO THE NEXT ADJACENT POLE) AND INFRASTRUCTURE.
DS5	REMOVE EXISTING CONCRETE PAVEMENT SYSTEM AND BASE IN ITS ENTIRETY. PREPARE/MODIFY THE EXISTING SUBGRADE AND SURROUNDING AREA AS REQ'D TO ACCOMMODATE THE NEW SCOPE OF WORK.
DS6	REMOVE/MODIFY EXISTING LANDSCAPE AREA AS REQUIRED FOR THE NEW SCOPE OF WORK. REMOVE THE SUB-GRADE AS REQ'D AND MODIFY THE AREA AS REQ'D IN ORDER TO ACCOMMODATE THE NEW SCOPE OF WORK. COORDINATE WITH THE CIVIL SCOPE OF WORK.
DS7	REMOVE EXISTING CONCRETE SIDEWALK SYSTEM, GRAVEL BASE/SUBGRADE AND METAL HANDRAIL SYSTEMS IN THEIR ENTIRETY. PREPARE THE AREA AS REQ'D TO ACCOMMODATE THE NEW SCOPE OF WORK.
DS8	EXTENT OF PAVEMENT DEMO. EXISTING STREET PAVEMENT IS TO REMAIN AND BE PROTECTED DURING CONSTRUCTION (TYPICAL, UNLESS OTHERWISE REQUIRED TO BE REMOVED).
DS10	REMOVE EXISTING LANDSCAPING IN ITS ENTIRETY. PREP THE AREA AS REQ'D FOR THE NEW SCOPE OF WORK.
DS11	REMOVE EXISTING CONCRETE APRON AND DRIVEWAY AND ASSOCIATED BASE AND SUB-GRADE (AS REQUIRED) IN ITS ENTIRETY. PREPARE/MODIFY THE AREA AS REQUIRED FOR THE NEW SCOPE OF WORK.
DS12	REMOVE EXISTING GAS METER AND GAS SERVICE IN ITS ENTIRETY. PATCH/REPAIR EXISTING CONSTRUCTION SCHEDULED TO REMAIN TO MATCH EXISTING. INFILL HOLES. COORDINATE WITH THE CIVIL SCOPE OF WORK.
DS13	REMOVE EXISTING SIDEWALK AND/OR CURB SYSTEMS IN THEIR ENTIRETY AND PREPARE AS NEEDED IN ORDER TO ACCOMODATE THE NEW SCOPE OF WORK.
DS14	REMOVE EXISTING SIDEWALK AND CURB SYSTEMS AS REQUIRED TO THE NEAREST CONTROL JOINT. BEYOND THIS POINT THE EXISTING CONCRETE SIDEWALK SYSTEM IS TO REMAIN. COORDINATE WITH THE CIVIL SCOPE OF WORK.
DS15	REMOVE EXISTING CONCRETE LOADING DOCK APRON PAVEMENT AND ASSOCIATED GRAVEL BASE AND SUBGRADE (AS REQ'D) IN ITS ENTIRETY. PREPARE/MODIFY THE AREA AS REQUIRED FOR THE NEW SCOPE OF WORK.
DS16	REMOVE EXISTING WOOD PARKING BUMPERS (ATTACHED TO THE RETAINING WALL SYSTEM) IN THEIR ENTIRETY. EXISTING RETAINING WALL TO REMAIN. PATCH/REPAIR/INFILL REMAINING HOLES. PREPARE/MODIFY THE AREA AS REQUIRED FOR THE NEW SCOPE OF WORK.

DEMO PLAN KEYED NOTES

TAG	DESCRIPTION
DS17	REMOVE EXISTING OVERHEAD POWER LINE SYSTEM AND ASSOCIATED INFRASTRUCTURE IN THEIR ENTIRETY. COORDINATE WITH THE UTILITY COMPANY. PREPARE/MODIFY THE AREA AS REQUIRED FOR THE NEW SCOPE OF WORK.
DS18	EXISTING UTILITY POLE TO REMAIN AND BE PROTECTED. COORDINATE WITH THE UTILITY COMPANY. PREPARE/MODIFY THE AREA AS REQUIRED FOR THE NEW SCOPE OF WORK.
DS19	REMOVE EXISTING MECHANICAL UNITS IN THEIR ENTIRETY, INCLUDING ALL PIPING, DUCTWORK, CONDUITS, ETC.. PREPARE/MODIFY THE AREA AS REQUIRED FOR THE NEW SCOPE OF WORK.
DS20	REMOVE THE EXISTING FENCING IN ITS ENTIRETY. REMOVE ALL POSTS/FOUNDATIONS. PREPARE/MODIFY THE AREA AS REQUIRED FOR THE NEW SCOPE OF WORK.
DS21	REMOVE THE EXISTING MECHANICAL EQUIPMENT AND ASSOCIATED PIPING, CONDUITS, ETC IN ITS ENTIRETY. PATCH/REPAIR RESULTING HOLES/AREAS IN THE MASONRY WALL SYSTEM AS REQ'D TO RETURN TO LIKE-NEW CONDITIONS.
DS22	REMOVE EXISTING CRACKED/DAMAGED CONCRETE STOOP IN ITS ENTIRETY. PROTECT SURROUNDING MASONRY SCHEDULED TO REMAIN. PATCH/REPAIR THE AREA AND SURROUNDING CONSTRUCTION AS REQ'D TO RETURN TO LIKE NEW CONDITION. COORDINATE WITH THE STRUCTURAL SCOPE OF WORK.
DS23	EXISTING SIDEWALK SYSTEM TO REMAIN. PROTECT DURING CONSTRUCTION.
DS24	REMOVE/SAWCUT/TRENCH THE EXISTING STREET PAVEMENT AS/WHERE REQUIRED TO ACCOMMODATE THE NEW SCOPE OF WORK. PRIMARILY FOR INSTALLATION OF NEW UNDERGROUND SITE UTILITIES. COORDINATE WITH THE EXISTING CONDITIONS AND THE CIVIL SCOPE OF WORK. PROTECT REMAINING PAVEMENT DURING CONSTRUCTION. CONTRACTOR IS RESPONSIBLE TO COORDINATE THE WORK AS REQUIRED BY THE AHJ AND TO REDUCE IMPACT TO TRAFFIC FLOW ON COMMERCIAL AVE.
DS25	REMOVE EXISTING SUMP PUMP SYSTEM IN ITS ENTIRETY. MODIFY THE AREA AS REQUIRED TO ACCOMMODATE THE NEW SCOPE OF WORK. COORDINATE WITH THE EXISTING CONDITIONS AND THE CIVIL SCOPE OF WORK.
DS26	REMOVE EXISTING SIGNAGE WALL SYSTEM IN ITS ENTIRETY. MODIFY THE AREA AS REQUIRED TO ACCOMMODATE THE NEW SCOPE OF WORK. COORDINATE WITH THE EXISTING CONDITIONS AND THE CIVIL SCOPE OF WORK.
DS27	APPROXIMATE LOCATION OF THE EXISTING FIRE SERVICE SIAMESE VALVE AND BELL AND COMPONENTS THAT ARE TO BE REMOVED IN THEIR ENTIRETY.
DS28	APPROXIMATE LOCATION OF THE EXISTING KNOX BOX THAT IS TO BE REMOVED IN ITS ENTIRETY.

SITE PLAN LEGEND

- PROPERTY LINE
- EASEMENT
- SETBACK LINE
- FENCE LINE
- OVERHEAD DOOR
- CONCRETE SIDEWALK / MECHANICAL SLABS
- STREET
- HEAVY-DUTY CONCRETE PAVEMENT. CONCRETE APRONS/STOOPS TYPICAL AT OVERHEAD DOORS AND MAN-DOORS. SEE PLANS FOR ADD'L NOTES.
- HEAVY-DUTY ASPHALT PAVEMENT
- INDICATED SNOW MELT SYSTEM. COORDINATE WITH CIVIL AND MECHANICAL SCOPES OF WORK.
- GRASS
- PLANTING AREA
- EXISTING UTILITY POLE
- FIRE HYDRANT
- GEOTHERMAL WELL

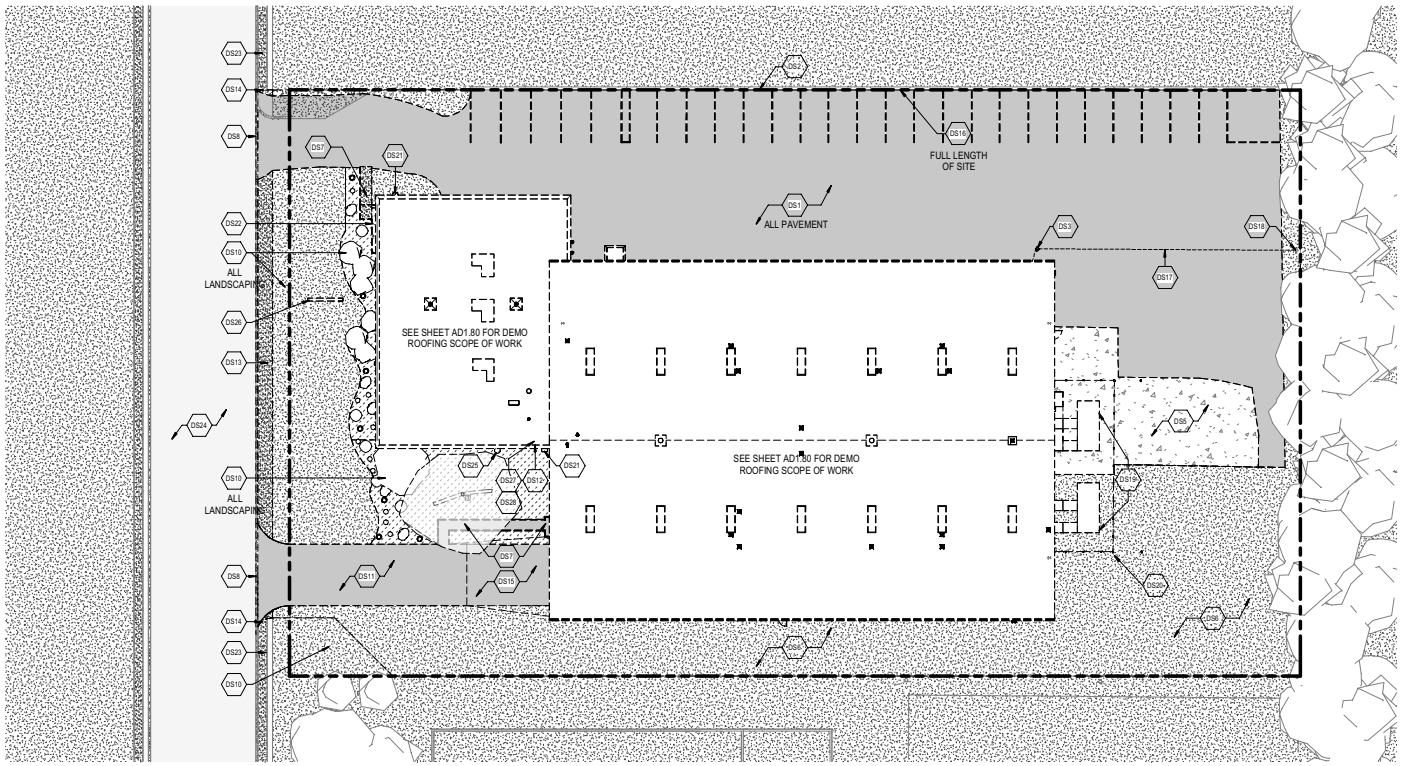

PLAN NORTH / TRUE NORTH

1 **OVERALL DEMO SITE PLAN**
1" = 20'-0"

fgma FGMARCHITECTS
FGM Architects
1 Westbrook Corporate Center
Suite 1000
Westchester, Illinois 60154
630.574.8300 OFFICE
ILLINOIS PROFESSIONAL DESIGN FIRM #184.008390

CIVIL & LANDSCAPE
ERIKSSON ENGINEERING ASSOCIATES, LTD.
145 COMMERCE DRIVE, SUITE A
GRAYSLAKE, ILLINOIS, 60030
847.223.4804 (O)
IL STATE CERTIFICATE OF AUTHORITY

STRUCTURAL
McCLUSKEY ENGINEERING CORPORATION
1887 HIGH GROVE LANE
NAPERVILLE, ILLINOIS, 60540
630.717.5399 (O) 630.717.539781
IL STATE CERTIFICATE OF AUTHORITY

M.E.P.FP.
CONSOLIDATED CONSULTING ENGINEERS
224 SOUTH MILWAUKEE AVENUE, SUITE E
WHEELING, ILLINOIS, 60090
847.215.0600 (O)
IL STATE CERTIFICATE OF AUTHORITY

NOT FOR CONSTRUCTION

FOR REVIEW ONLY

Not for regulatory approval, permit or construction.

The information on this document is preliminary or incomplete, not for construction, recording purposes, or implementation.

ISSUANCE		
NO	DATE	DESCRIPTION
	06/27/2025	100% DESIGN DEVELOPMENT

FLEET MAINTENANCE FACILITY
VILLAGE OF NORTHBROOK
3504 COMMERCIAL AVENUE, NORTHBROOK, IL

ISSUED FOR PLAN COMMISSION - 08/21/2025

SITE PLAN - OVERALL DEMO

SHEET NO.
PC0.10

JOB NO. 25-4189.01

© 2025 FGM Architects

9/8/2025 9:28:44 AM
Autodesk Docs://Northbrook Fleet Maintenance Facility/25-4189.01_Northbrook_Fleet_Maintenance_Facility_CD-CA_2024.rvt
Copyright 2025 FGM Architects

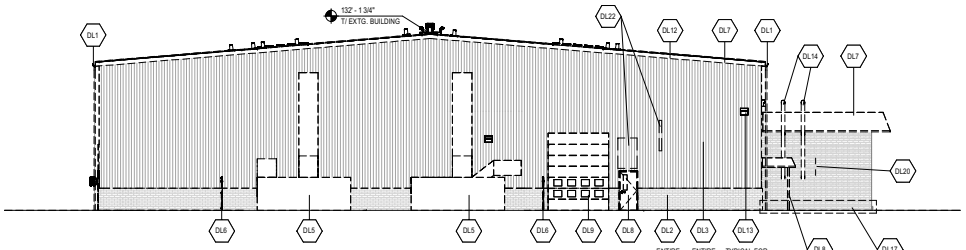

1 DEMOLITION ELEVATION - NORTH

3/32" = 1'-0"

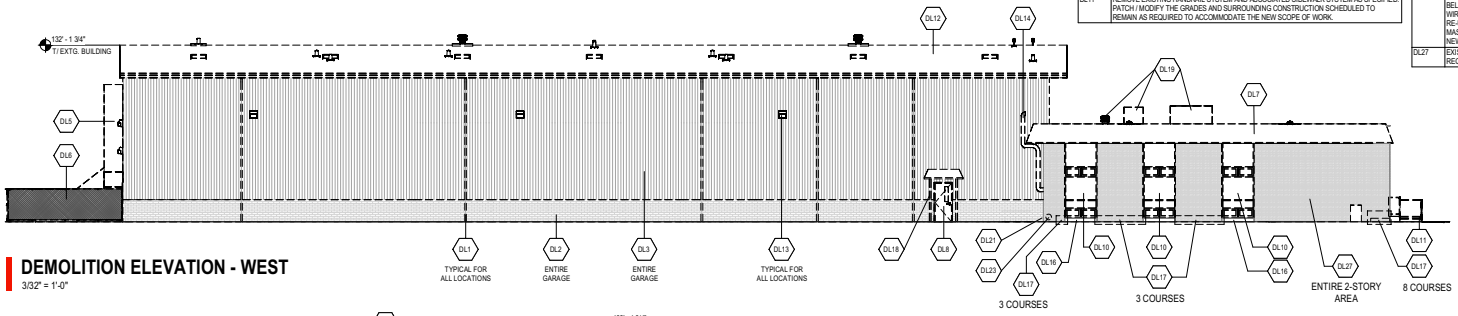

2 DEMOLITION ELEVATION - WEST

3/32" = 1'-0"

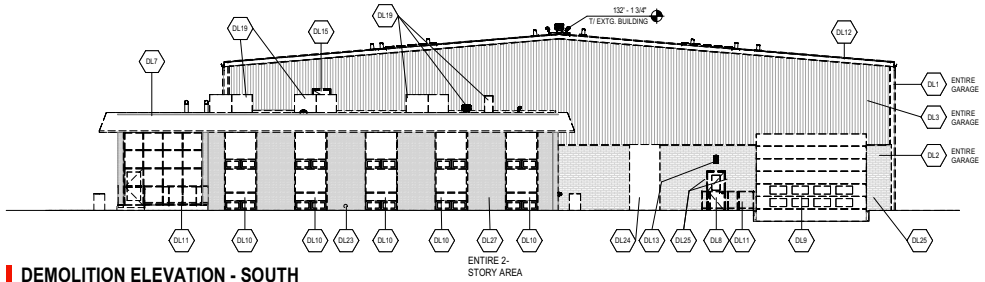

3 DEMOLITION ELEVATION - SOUTH

3/32" = 1'-0"

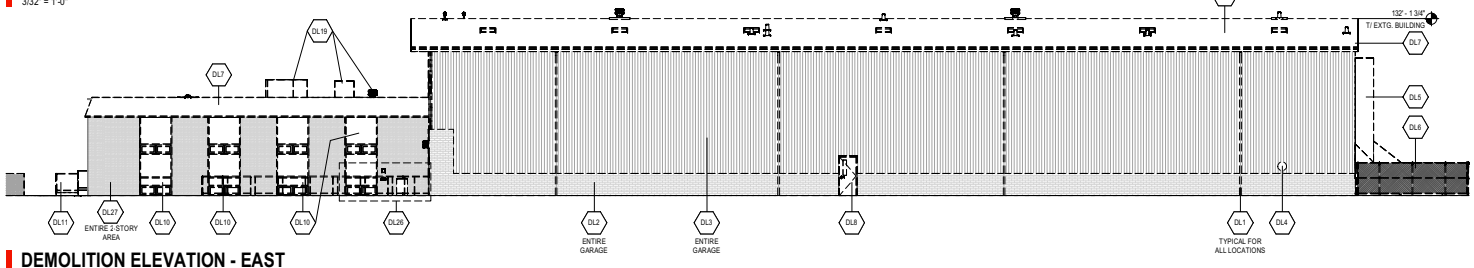

4 DEMOLITION ELEVATION - EAST

3/32" = 1'-0"

EXTERIOR ELEVATIONS KEYED NOTES

TAG	DESCRIPTION
DL1	REMOVE EXISTING GUTTERS AND DOWNSPOUT SYSTEM, (TYP).
DL2	REMOVE EXISTING MASONRY WAINSCOT SYSTEM IN ITS ENTIRETY. EXISTING FOUNDATION WALL TO REMAIN. PATCH / REPAIR / MODIFY EXISTING FOUNDATION SYSTEM AS REQUIRED TO ACCOMMODATE THE NEW SCOPE OF WORK. REMOVE EXISTING ELECTRICAL, PLUMBING, ETC. SYSTEMS WHICH ARE CURRENTLY PRESENT IN THIS MASONRY WAINSCOT SYSTEM.
DL3	REMOVE EXISTING ENCLOSURE SYSTEM IN ITS ENTIRETY, EXISTING PRIMARY STRUCTURAL SYSTEM AND SECONDARY FRAMING (Z-GIRTS, TYPICAL) TO REMAIN (UNLESS SPECIFICALLY CALLED OUT TO BE REMOVED OR IS OTHERWISE IN CONFLICT WITH THE NEW SCOPE OF WORK). REMOVE ALL FIXTURES / EQUIPMENT / ETC. PRESENT IN THIS EXTERIOR WALL SYSTEM IN ITS ENTIRETY. REMOVE ALL SECONDARY FRAMING WHICH IS PRESENT TO FRAME OUT DOORS, LOUVERS, DUCT PENETRATIONS, AND OTHER SIMILAR ITEMS. PATCH / REPAIR / MODIFY / PREP EXISTING STEEL FRAMING / STRUCTURAL SYSTEM AS REQUIRED TO ACCOMMODATE THE NEW SCOPE OF WORK.
DL4	REMOVE EXISTING WALL-MOUNTED EXHAUST FAN SYSTEM AND ASSOCIATED ELECTRICAL / WIRING / CONDUITS /ETC. INFRASTRUCTURE.
DL5	REMOVE EXISTING EXTERIOR MECHANICAL EQUIPMENT, DUCTWORK SYSTEMS, SUPPORTS, FOUNDATIONS AND ALL ASSOCIATED PIPING AND CONDUITS / ELECTRICAL SYSTEMS IN THEIR ENTIRETY. MODIFY THE EXISTING CONDITIONS AS REQUIRED TO ACCOMMODATE THE NEW SCOPE OF WORK.
DL6	REMOVE EXISTING FENCE SYSTEM IN ITS ENTIRETY, INCLUDING THE EXISTING FOUNDATIONS / POSTS AND ANY OTHER FENCING ELEMENTS. MODIFY / REPAIR THE EXISTING AREAS AS REQUIRED TO ACCOMMODATE THE NEW SCOPE OF WORK.
DL7	REMOVE THE EXISTING ROOF SOFFIT / FASCIA SYSTEM IN ITS ENTIRETY, INCLUDING ALL ASSOCIATED LIGHTING/CONDUITS. MODIFY / REMOVE THE EXISTING UNDERLYING FRAMING/STRUCTURAL SYSTEM AND ROOFING DECK AS SPECIFIED IN THE DEMO SCOPE OF WORK. PATCH/REPAIR/PREP THE EXISTING CONSTRUCTION TO REMAIN AS REQ'D TO ACCOMMODATE THE NEW SCOPE OF WORK.
DL8	REMOVE EXISTING DOOR, FRAME, AND HARDWARE SYSTEM IN ITS ENTIRETY ALONG WITH THE ASSOCIATED FRAMING SYSTEM. PATCH / REPAIR EXISTING CONSTRUCTION SCHEDULED TO REMAIN AS REQUIRED TO ACCOMMODATE THE NEW SCOPE OF WORK.
DL9	REMOVE EXISTING OVERHEAD COILING DOOR SYSTEM IN ITS ENTIRETY, INCLUDING THE ASSOCIATED ELECTRICAL POWER / CONTROL SYSTEM. PATCH / REPAIR EXISTING CONSTRUCTION SCHEDULED TO REMAIN AS REQUIRED TO ACCOMMODATE THE NEW SCOPE OF WORK.
DL10	REMOVE EXISTING ALUMINUM CURTAIN WALL / STOREFRONT / FRAMING SYSTEM INCLUDING DOOR / FRAME / HARDWARE (WHERE PRESENT) IN THEIR ENTIRETY. REMOVE ALL EXISTING SEALANTS AND FASTENERS AND PATCH ALL MASONRY AND SURROUNDING CONSTRUCTION AS REQ'D TO RETURN TO LIKE NEW CONDITION AND TO ACCOMMODATE THE NEW SCOPE OF WORK.
DL11	REMOVE EXISTING HANDRAIL SYSTEM AND ASSOCIATED SIDEWALK SYSTEM AS SPECIFIED. PATCH / MODIFY THE GRADES AND SURROUNDING CONSTRUCTION SCHEDULED TO REMAIN AS REQUIRED TO ACCOMMODATE THE NEW SCOPE OF WORK.

EXTERIOR ELEVATIONS KEYED NOTES

TAG	DESCRIPTION
DL12	REMOVE EXISTING ROOFING SYSTEM (INCLUDING THE UNDERLYING INSULATION AND LINER SYSTEMS), SKYLIGHTS, ROOFTOP EQUIPMENT, PIPES, PENETRATION SYSTEMS, FASCIA/FLASHING/SOFFIT(S), ETC. IN THEIR ENTIRETY. PATCH / MODIFY / PREPARE THE REMAINING ROOF FRAMING SYSTEMS AS REQUIRED TO ACCOMMODATE THE NEW SCOPE OF WORK.
DL13	REMOVE EXISTING EXTERIOR LIGHTING SYSTEM IN ITS ENTIRETY, INCLUDING ALL WIRING, CONDUITS, ETC. PREPARE THE AREA AS REQUIRED TO ACCOMMODATE THE NEW SCOPE OF WORK.
DL14	REMOVE EXISTING EXHAUST SYSTEM IN ITS ENTIRETY. INFILL THE MASONRY WITH NEW BRICKS IN FULL-BRICK INCREMENTS TOOTHED-IN TO THE EXISTING MASONRY COURSING. PREPARE THE AREA AS REQUIRED TO ACCOMMODATE THE NEW SCOPE OF WORK.
DL15	REMOVE EXISTING ROOF HATCH/DOOR SYSTEM IN ITS ENTIRETY. PREPARE THE AREA AS REQUIRED TO ACCOMMODATE THE NEW SCOPE OF WORK.
DL16	EXISTING STONE SILL TO REMAIN. PREPARE AS REQ'D TO ACCOMMODATE THE NEW SCOPE OF WORK. PROTECT DURING CONSTRUCTION.
DL17	REMOVE EXISTING DAMAGED MASONRY FACE BRICKS AND SURROUNDING DAMAGED MORTAR. SHORE EXISTING MASONRY TO REMAIN AS REQ'D. PREPARE THE AREA FOR MASONRY REPLACEMENT/NEW INSTALLATION IN THE NEW SCOPE OF WORK.
DL18	REMOVE EXISTING CANOPY STRUCTURE SYSTEM IN ITS ENTIRETY, INCLUDING ALL FOUDATION PIERS AND CONNECTIONS TO THE EXISTING FACILITY. COORDINATE WITH THE NEW SCOPE OF WORK.
DL19	REMOVE EXISTING ROOFTOP MECHANICAL SYSTEMS AND ASSOCIATED CURBS, STRUCTURE, PIPING, CONDUITS, ETC. INFILL THE EXISTING ROOFTOP OPENINGS IF NOT SCHEDULED TO BE REUSED IN THE NEW SCOPE OF WORK. PATCH/REPAIR/PREP EXISTING CONSTRUCTION AS REQ'D TO ACCOMMODATE THE NEW SCOPE OF WORK.
DL20	REMOVE EXISTING CONDUIT. PATCH/INFILL EXISTING MASONRY WALL SYSTEM TO MATCH EXISTING. REPLACE BRICKS IN FULL-BRICK INCREMENTS AND TOOTH-IN TO EXISTING COURSING. MATCH EXISTING.
DL21	REMOVE EXISTING CONDUIT AT GROUND LEVEL. REMOVE DAMAGED MASONRY. REPLACE WITH NEW MASONRY, IN FULL-BRICK INCREMENTS TOOTHED-IN TO EXISTING COURSING. MATCH EXISTING.
DL22	REMOVE EXISTING MECHANICAL LOUVER AND FLUE SYSTEMS.
DL23	REMOVE EXISTING ROOF DRAIN OUTLET. REMOVE SURROUNDING MASONRY IN FULL-BRICK INCREMENTS AND PATCH IN NEW MASONRY INTO THE EXISTING COURSING.
DL24	REMOVE EXISTING EXTERIOR WALL PANEL SYSTEM IN ITS ENTIRETY AND ASSOCIATED STRUCTURE/FRAMING.
DL25	REMOVE EXISTING EXTERIOR WALL MOUNTED DEVICE IN ITS ENTIRETY, INCLUDING ANY ASSOCIATED CONDUITS, WIRING, ETC.
DL26	REMOVE EXISTING GAS METER AND ASSOCIATED SERVICE. REMOVE MECHANICAL EQUIPMENT AND PIPING/CONDUITS. REMOVE EXISTING FIRE SERVICE SIAMESE VALVE AND BELL AND COMPONENTS. REMOVE KNOX BOX. REMOVE TELECOM UTILITY EQUIPMENT AND WIRING. REMOVE HOSE BIB, SUMP PIT AND PIPING. FOR LOCATIONS NOT SCHEDULE TO BE RE-USED OR SIMILAR, REMOVE BRICKS IN FULL-BLOCK INCREMENTS AND TOOTH-IN NEW MASONRY INTO THE EXISTING COURSING. PREP AREAS AS REQ'D TO ACCOMMODATE THE NEW SCOPE OF WORK.
DL27	EXISTING MASONRY WALL SYSTEM TO REMAIN, UNLESS NOTED OTHERWISE. PREP AS REQ'D TO ACCOMMODATE THE NEW SCOPE OF WORK.

GENERAL DEMOLITION NOTES

1. SEE SHEET AD0.10 FOR GENERAL DEMOLITION NOTES THAT APPLY TO THE ENTIRETY OF THE PROJECT.

DEMOLITION LEGEND

- EXISTING WALL, PARTITION OR ITEM TO REMAIN
- EXISTING WALL, PARTITION, AND/OR EXISTING CONSTRUCTION TO BE DEMOLISHED - REFER TO KEYED NOTES FOR ADDITIONAL SCOPE OF WORK INFORMATION, WHERE APPLICABLE.
- EXISTING DOOR, FRAME AND HARDWARE TO REMAIN (DOUBLE DOOR SHALL APPEAR SIMILAR)
- EXISTING DOOR, FRAME AND HARDWARE TO BE DEMOLISHED (DOUBLE DOOR SHALL APPEAR SIMILAR) REFER TO KEYED NOTES FOR ADDITIONAL SCOPE OF WORK INFORMATION, WHERE APPLICABLE.
- EQUIPMENT OR FIXTURE TO BE DEMOLISHED. SIZE AND SHAPE MAY VARY - REFER TO KEYED NOTES FOR ADDITIONAL SCOPE OF WORK INFORMATION, WHERE APPLICABLE.
- ITEM SHOWN ON DEMOLITION SHEETS WITH A DASHED LINE SHALL INDICATE ITEM TO BE REMOVED. REFER TO KEYED NOTES FOR ADDITIONAL SCOPE OF WORK INFORMATION, WHERE APPLICABLE.

fgma
FGMARCHITECTS
FGM Architects
1 Westbrook Corporate Center
Suite 1000
Westchester, Illinois 60154
630.574.8300 OFFICE
ILLINOIS PROFESSIONAL DESIGN FIRM #184.003190

CIVIL & LANDSCAPE
ERIKSSON ENGINEERING ASSOCIATES, LTD.
145 COMMERCE DRIVE, SUITE A
GRAYSLAKE, ILLINOIS, 60030
847.223.4804 (O)
IL STATE CERTIFICATE OF AUTHORITY

STRUCTURAL
McCLUSKEY ENGINEERING CORPORATION
1887 HIGH GROVE LANE
NAPERVILLE, ILLINOIS, 60540
630.717.5399 (O) 630.717.539791
IL STATE CERTIFICATE OF AUTHORITY

M.E.P.FP.
CONSOLIDATED CONSULTING ENGINEERS
224 SOUTH MILWAUKEE AVENUE, SUITE E
WHEELING, ILLINOIS, 60090
847.215.0600 (O)
IL STATE CERTIFICATE OF AUTHORITY

NOT FOR CONSTRUCTION

FOR REVIEW ONLY

Not for regulatory approval, permit or construction.

The information on this document is preliminary or incomplete, not for construction, recording purposes, or implementation.

ISSUANCE		
NO	DATE	DESCRIPTION
	06/27/2025	100% DESIGN DEVELOPMENT

FLEET MAINTENANCE FACILITY
VILLAGE OF NORTHBROOK
3504 COMMERCIAL AVENUE, NORTHBROOK, IL

ISSUED FOR PLAN COMMISSION - 08/21/2025

DEMOLITION ELEVATIONS

SHEET NO.
PC0.20

JOB NO. 25-4189.01

© 2025 FGM Architects

9/8/2025 9:28:45 AM
Autodesk Docs://Northbrook Fleet Maintenance Facility/25-4189.01_Northbrook_Fleet_Maintenance_Facility_CD-CA_2024.rvt
Copyright 2025 FGM ARCHITECTS

PROPOSED SITE PLAN

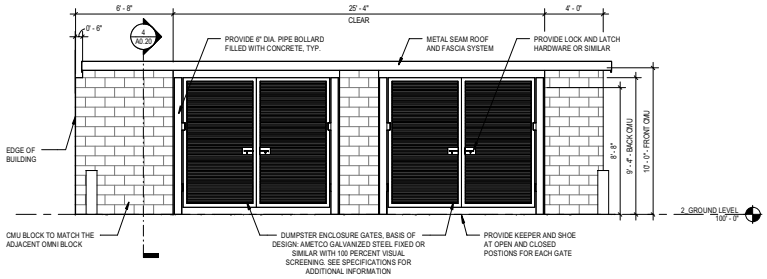

2 TRASH ENCLOSURE
1/4" = 1'-0"

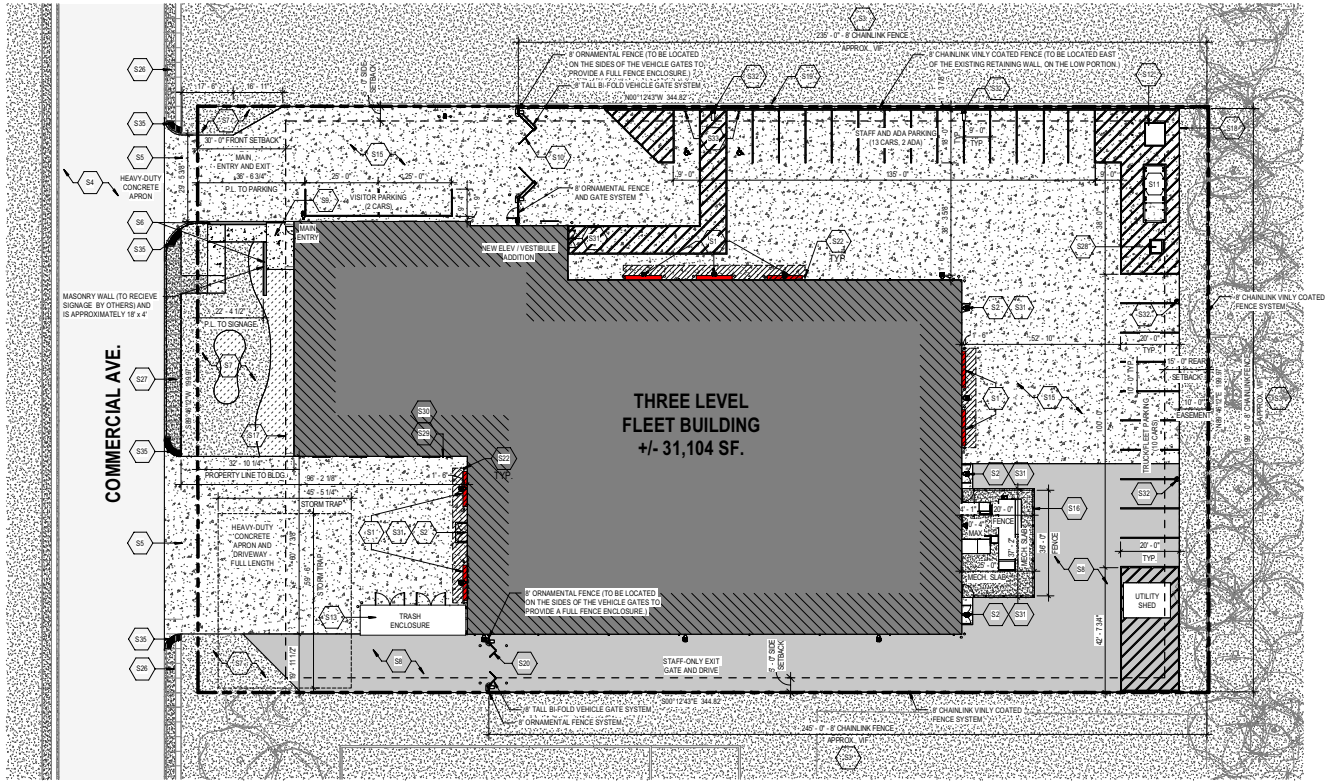

PLAN NORTH
TRUE NORTH

1 OVERALL SITE PLAN
1" = 20'-0"

SITE PLAN KEYED NOTES

TAG	DESCRIPTION
S1	INSTALL NEW OVERHEAD DOOR (14'W X 16'H), MODIFY SURROUNDING CONSTRUCTION AS REQUIRED TO ACCOMMODATE THE NEW SCOPE OF WORK.
S2	INSTALL NEW MAN DOOR(S).
S3	INSTALL NEW 8' CHAINLINK FENCE.
S4	EXISTING ROAD PAVEMENT TO REMAIN.
S5	NEW CONCRETE APRON.
S6	INSTALL NEW MASONRY KNEE / SIGNAGE WALL. SIGNAGE BY OTHERS.
S7	NEW RAIN GARDEN / BUTTERFLY GARDEN.
S8	INSTALL NEW ASPHALT PAVEMENT.
S9	PROVIDE NEW MAIN ENTRY STOOP/LANDING AND TIE INTO THE EXISTING BULDING AND ADJACENT CONSTRUCTION AS REQUIRED. REPAIR ANY AREAS DAMAGED DURING CONSTRUCTION.
S10	INSTALL NEW ACCORDION RETRACTING SECURITY GATE. (29' CLEAR, 8' HEIGHT) SEE ENLARGED PLANS AND DETAILS FOR ADDITIONAL INFORMATION.
S11	PROPOSED GENERATOR LOCATION (EXACT SIZE AND ORIENTATION IS TBD).
S12	PROPOSED TRANSFORMER LOCATION (EXACT SIZE AND ORIENTATION IS TBD).
S13	INSTALL NEW DUMPSTER ENCLOSURE.
S15	INSTALL NEW HEAVY-DUTY CONCRETE PAVEMENT.
S16	INSTALL NEW FENCED AREA FOR MECHANICAL UNITS. EXACT SIZE / LOCATION TBD.
S17	30' FRONT YARD SETBACK.
S18	10' UTILITY EASEMENT.
S19	NOTE: THE EXISTING RETAING WALL IS NOT LOCATED ON OUR PROJECT'S PROPERTY. ANY NEW PERIMETER FENCE MAY BE LOCATED ON PROJECT PROPERTY OR THE NEIGHBOR WOULD NEED TO PERMIT THE FENCE TO BE INSTALLED ON THEIR LAND (AND AT THE TOP OF THE RETAINING WALL).
S20	INSTALL NEW ACCORDION RETRACTING SECURITY GATE. (12' CLEAR, 8' HEIGHT). SEE ENLARGED PLANS AND DETAILS FOR ADDITIONAL INFORMATION.
S22	PROVIDE NEW PIPE BOLLARD, SEE DETAIL ON SHEET A0.20 FOR ADDITIONAL INFORMATION.
S26	EXISTING SIDEWALK SYSTEM TO REMAIN. PROTECT DURING CONSTRUCTION.
S27	PROVIDE NEW SIDEWALK AND/OR CURB AND GRANULAR BASE SYSTEM AS REQUIRED. COORDINATE EXACT EXTENTS IN THE FIELD AND WITH THE CIVIL SCOPE OF WORK.
S28	PROPOSED TEMPORARY GENERATOR CONNECTION LOCATION (EXACT SIZE AND ORIENTATION IS TBD).
S29	APPROXIMATE LOCATION OF THE NEW FIRE DEPARTMENT CONNECTION AND WATERFLOW ALARM AND COMPONENTS AS REQUIRED TO PROVIDE A FULLY FUNCTIONAL SYSTEM. COORDINATE EXACT EXTENTS IN THE FIELD AND WITH THE NEW AND MEP SCOPE OF WORK.
S30	APPROXIMATE LOCATION OF THE NEW KNOX BOX ADJACENT TO THE FIRE DEPARTEMENT CONNECTION. KNOX BOX TO MEET ALL LOCAL AHJ REQUIREMENTS.
S31	PROVIDE FROST STOOP SYSTEM, TYPICAL AT EVERY EXTERIOR DOOR LOCATION. COORDINATE EXTENS WITH THE FIELD CONDITIONS AND CIVIL SCOPES OF WORK.
S32	PARKING LOT LIGHT POLE AND FOUNDATION SYSTEM. COORDINATE WITH CIVIL AND ELECTRICAL SCOPES OF WORK.
S33	ACCESSIBLE PARKING ONLY SIGN.
S35	DETECTABLE WARNING SYSTEM, CAST INTO THE CONCRETE SIDEWALK SYSTEM.

SITE PLAN LEGEND

- PROPERTY LINE
- EASEMENT
- SETBACK LINE
- FENCE LINE
- OVERHEAD DOOR
- CONCRETE SIDEWALK / MECHANICAL SLABS
- STREET
- HEAVY-DUTY CONCRETE PAVEMENT. CONCRETE APRONS/STOOPS TYPICAL AT OVERHEAD DOORS AND MAN DOORS. SEE PLANS FOR ADD'L NOTES.
- HEAVY-DUTY ASPHALT PAVEMENT
- INDICATED SNOW MELT SYSTEM. COORDINATE WITH CIVIL AND MECHANICAL SCOPES OF WORK.
- GRASS
- PLANTING AREA
- EXISTING UTILITY POLE
- FIRE HYDRANT
- GEOTHERMAL WELL

fgma FGMARCHITECTS
FGM Architects
1 Westbrook Corporate Center
Suite 1000
Westchester, Illinois 60154
630.574.6300 OFFICE
ILLINOIS PROFESSIONAL DESIGN FIRM #184.003390

CIVIL & LANDSCAPE
ERIKSSON ENGINEERING ASSOCIATES, LTD.
145 COMMERCE DRIVE, SUITE A
GRAYSLAKE, ILLINOIS, 60030
847.223.4804 (O)
IL STATE CERTIFICATE OF AUTHORITY

STRUCTURAL
McCLUSKEY ENGINEERING CORPORATION
1887 HIGH GROVE LANE
NAPERVILLE, ILLINOIS, 60563
630.717.5399 (O) 630.717.539791
IL STATE CERTIFICATE OF AUTHORITY

M.E.P.FP
CONSOLIDATED CONSULTING ENGINEERS
224 SOUTH MILWAUKEE AVENUE, SUITE E
WHEELING, ILLINOIS, 60090
847.215.0600 (O)
IL STATE CERTIFICATE OF AUTHORITY

NOT FOR CONSTRUCTION

FOR REVIEW ONLY

Not for regulatory approval, permit or construction.

The information on this document is preliminary or incomplete, not for construction, recording purposes, or implementation.

ISSUANCE		
NO	DATE	DESCRIPTION
	06/27/2025	100% DESIGN DEVELOPMENT

FLEET MAINTENANCE FACILITY
VILLAGE OF NORTHBROOK
3504 COMMERCIAL AVENUE, NORTHBROOK, IL

ISSUED FOR PLAN COMMISSION - 08/21/2025

SITE PLAN - OVERALL

SHEET NO.
PC1.10

JOB NO. 25-4189.01

© 2025 FGM Architects

9/8/2025 9:28:52 AM
Autodesk Docs://Northbrook Fleet Maintenance Facility/25-4189.01_Northbrook_Fleet_Maintenance_Facility_CD-CA_2024.rvt
Copyright 2025 FGM ARCHITECTS

PROPOSED ELEVATIONS

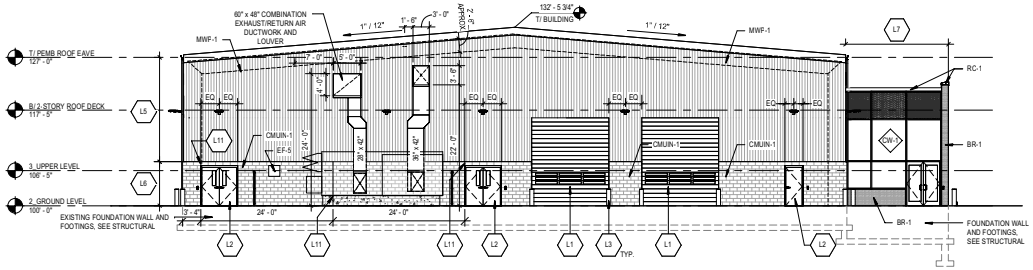

4 ELEVATION - NORTH
3/32" = 1'-0"

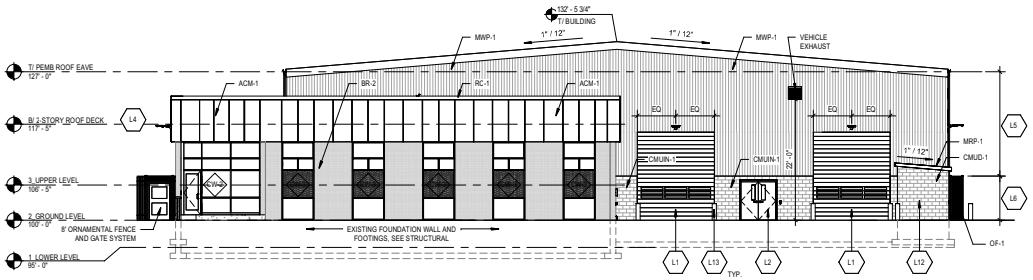

3 ELEVATION - SOUTH
3/32" = 1'-0"

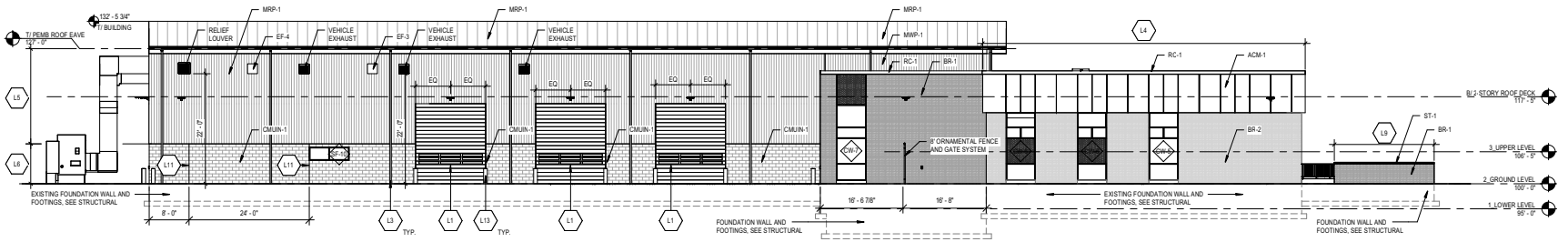

2 ELEVATION - WEST
3/32" = 1'-0"

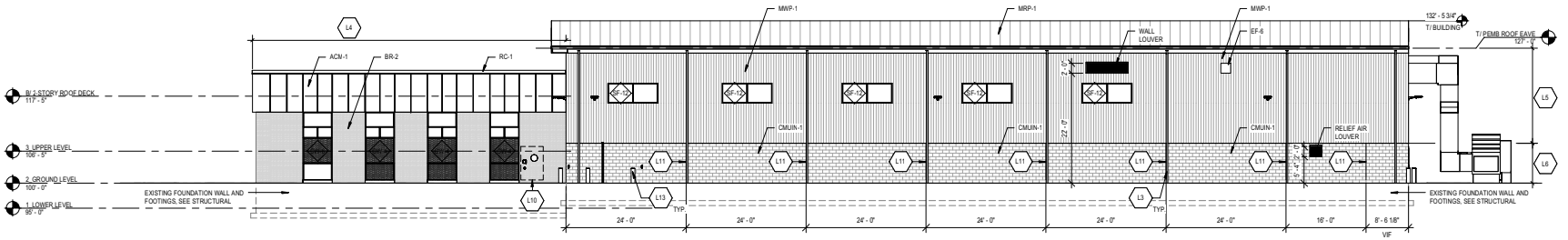

1 ELEVATION - EAST
3/32" = 1'-0"

EXTERIOR ELEVATIONS KEYED NOTES

TAG	DESCRIPTION
L1	INSTALL NEW OVERHEAD DOOR (14'W X 16'H) SEE ENLARGED PLANS FOR MORE INFORMATION.
L2	INSTALL NEW MAN DOOR. EXTERIOR OF DOOR AND FRAME TO BE FIELD PAINTED TO MATCH EXTERIOR FINISHES. SEE DOOR SCHEDULE FOR INFORMATION.
L3	INSTALL NEW GUTTER AND DOWNSPOUTS, TYPICAL.
L4	INSTALL NEW ROOF FASCIA.
L5	INSTALL NEW VERTICAL METAL PANEL SYSTEM, SEE WALL SECTIONS FOR MORE INFORMATION.
L6	INSTALL NEW MASONRY WAINSCOT, SEE WALL SECTIONS FOR MORE INFORMATION.
L7	NEW VEST/BULE ADDITION WITH ACCENT BRICK FINISH.
L9	INSTALL NEW ENTRY SLOPED WALKWAY AND SIGNAGE WALL, SEE SITE PLAN FOR MORE INFORMATION.
L10	APPROXIMATE LOCATION OF THE NEW KNOX BOX AND FIRE DEPARTMENT CONNECTIO, MOUNTED APPROXIMATELY 36"-48" ABOVE FINISHED FLOOR (AFF), ALONG WITH A WATERFLOW ALARM CONNECTED TO THE FIRE PROTECTION SYSTEM'S WATER FLOW, AND A HORN/STROBE SHALL ACTIVATE UPON FIRE ALARM INITIATION. COORDINATE EXACT EXTENTS IN THE FIELD AND WITH THE MEP SCOPE OF WORK.
L11	MASONRY CONTROL JOINT
L12	NEW MASONRY TRASH ENCLOSURE WITH FINISH TO MATCH BUILDING.
L13	INSTALL PIPE BOLLARD, TYPICAL.

fgma
FGMARCHITECTS
FGM Architects
1 Westbrook Corporate Center
Suite 1000
Westchester, Illinois 60154
630.574.8300 OFFICE
ILLINOIS PROFESSIONAL DESIGN FIRM #184.008390

CIVIL & LANDSCAPE
ERIKSSON ENGINEERING ASSOCIATES, LTD.
145 COMMERCE DRIVE, SUITE A
GRAYSLAKE, ILLINOIS, 60030
847.223.4804 (O)
IL STATE CERTIFICATE OF AUTHORITY

STRUCTURAL
McCLUSKEY ENGINEERING CORPORATION
1887 HIGH GROVE LANE
NAPERVILLE, ILLINOIS, 60540
630.717.5399 (O) 630.717.5397(F)
IL STATE CERTIFICATE OF AUTHORITY

M.E.P.FP
CONSOLIDATED CONSULTING ENGINEERS
224 SOUTH MILWAUKEE AVENUE, SUITE E
WHEELING, ILLINOIS, 60090
847.215.0600 (O)
IL STATE CERTIFICATE OF AUTHORITY

NOT FOR CONSTRUCTION

FOR REVIEW ONLY

Not for regulatory approval, permit or construction.

The information on this document is preliminary or incomplete, not for construction, recording purposes, or implementation.

ISSUANCE		
NO	DATE	DESCRIPTION
	06/27/2025	100% DESIGN DEVELOPMENT

FLEET MAINTENANCE FACILITY
VILLAGE OF NORTHBROOK
3504 COMMERCIAL AVENUE, NORTHBROOK, IL

ISSUED FOR PLAN COMMISSION - 08/21/2025

EXTERIOR ELEVATIONS

SHEET NO.
PC1.20

JOB NO. 25-4189.01

© 2025 FGM Architects

9/8/2025 9:28:54 AM
Autodesk Docs://Northbrook Fleet Maintenance Facility/25-4189.01_Northbrook_Fleet_Maintenance_Facility_CD-CA_2024.rvt
Copyright 2025 FGM ARCHITECTS

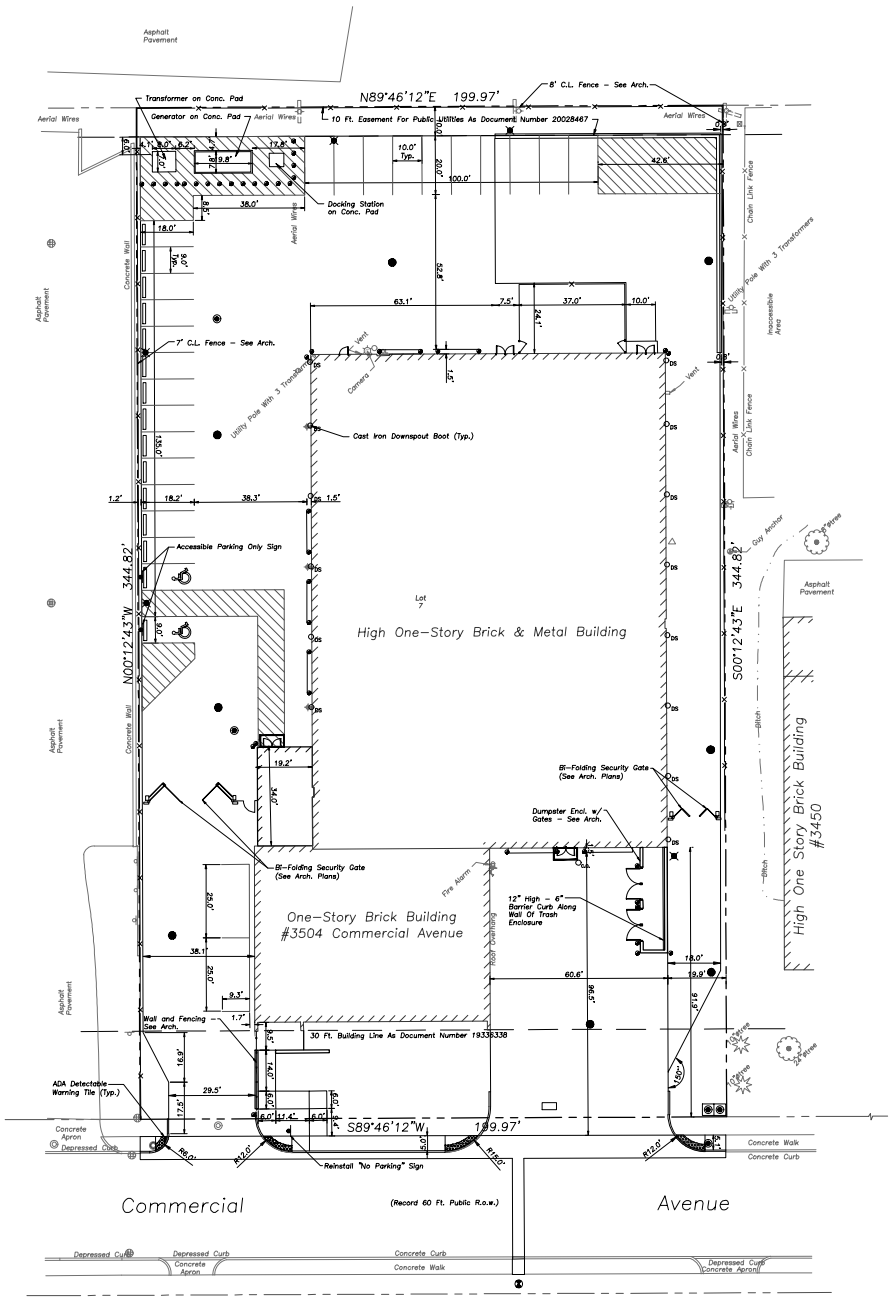

GENERAL NOTES

1. The Location Of Existing Underground Utilities, Such As Watermains, Sewers, Gas Lines, Etc., As Shown On The Plans, Has Been Determined From The Best Available Information and Is Given For The Convenience of The Contractor. However, The Owner and The Engineer Do Not Assume Responsibility In The Event That During Construction, Utilities Other Than Those Shown May Be Encountered, and That The Actual Location of Those Which Are Shown May Be Different From The Location As Shown On The Drawings. Contact Engineer Immediately If Surface and/or Subsurface Features Are Different Than Shown On The Drawings.
2. Notify The Engineer Without Delay of Any Discrepancies Between the Drawings and Existing Field Conditions.
3. Contractor Shall Provide Private Utility Locating Services for the Project Area.
4. Notify The Owner, Engineer and The Village of Northbrook a Minimum of 48 Hours In Advance of Performing Any Work.
5. All Areas, On or Off Site, Disturbed During Construction Operations and Not Part of the Work As Shown Hereon Shall Be Restored To Original Condition to the Satisfaction of the Owner at No Additional Cost to the Owner. It Is Incumbent Upon Contractor to Show That Damaged Areas Were Not Disturbed By Construction Operations.
6. These Drawings Assume That The Contractor Will Utilize An Electronic Drawing File (DWG) to Stake All Site Improvements Accordingly. Contractor Shall Re–Establish Horizontal Control. Horizontal Control Points Not Provided.
7. No Person May Utilize The Information Contained Within These Drawings Without Written Approval From Eriksson Engineering Associates, Ltd.
8. The Engineer Is Furnishing These Drawings For Construction Purposes As A Convenience To The Owner, Architect, Surveyor, or Contractor. Prior To The Use Of These Drawings For Construction Purposes, The User Of This Media Shall Verify All Dimensions And Locations Of Buildings With The Foundation Drawings And Architectural Site Plan, and Coordinate All Dimensions and Locations of All Site Items. If Conflicts Exist The User Of This Information Shall Contact The Engineer Immediately.
9. Provide An As–built Survey Prepared By A Licensed Professional Land Surveyor In Accordance With The Authorities Having Jurisdiction Which Shall Include As a Minimum All Detention Basins and Best Management Practices, Include All Storm and Sanitary Sewers, Structure Locations, Sizes, Rim and Invert Elevations, Final Detention Volume Calculations For The Basin(s), Watermain and Valve and Appurtenance Locations. Provide Photograph Of Restrictor Plate(s) Including Ruler Across Opening For Verification Of Restrictor Diameter.
10. The Illinois Department Of Transportation Standard Specifications For Road And Bridge Construction Latest Edition, And All Addenda Thereto, Shall Govern The Earthwork And Paving Work Under This Contract Unless Noted Otherwise.

GEOMETRY NOTES

1. All Dimensions Contained Herein Reference Back Of Curb, Face Of Retaining Wall, Edge Of Pavement, Center of Structure And Outside Face Of Building Foundation Unless Otherwise Noted.
2. All Pavement Striping Shall Be 4" Wide Yellow Paint Per Specifications, Two Coats for Latex Paints. All Cross Hatch Striping Shall Be 45° At 2'–0" Centers.
3. All Accessible Parking Signs (R7–8) Must Be Placed at the Center of the Space and Within 5 Feet of the Space.
4. Refer to Architectural Drawings for Exact Locations of All Buildings.
5. Refer to Architectural Drawings for Locations and Details of All Permanent Site Fencing.
6. Traffic Sign Posts Shall Be Breakaway Green U–Channel Posts, 2–lb/ft. 11 Gauge Steel, Embedded 42" Minimum into Ground.

N

20 0 20 40 60

Scale: 1"=20'

LEGEND

EXISTING		PROPOSED
	Manhole	
	Drainage Structure	
	Drainage Structure	
	Area Drain	
	Clean Out	
	Flared End Section	
	Storm Sewer	
	Sanitary Sewer	
	Combined Sewer	
W	Water Main	W
G	Gas Line	G
OH	Overhead Wires	OH
E	Electrical Cable (Buried)	E
T	Telephone Line	T
	Fire Hydrant	
	Valve Vault	
	Buffalo Box	
DS	Downspout	DS
BOL	Bollard	
	Gas Valve	
	Gas Meter	
	Electric Meter	
	Electric Manhole	
	Hand Hole	
	Light Pole	
	Light Pole w/ Mast Arm	
	Utility Pole	
T	Telephone Pedestal	
T	Telephone Manhole	
	Sign	
	Fence	
	Accessible Parking Stall	
	Curb & Gutter	
	Depressed Curb	
x C 782.50 x G 782.00	Curb Elevation	C 782.50 G 782.00
x P 783.25	Gutter Elevation	P 783.25
x W 782.10	Pavement Elevation	W 782.10
x 784.0	Sidewalk Elevation	x 784.0
x T/W 785.20	Ground Elevation	T/W 785.20
	Top of Retaining Wall Elevation	
	Swale	
781	Contour Line	781
	Deciduous Tree	
	Coniferous Tree	
	Brushline	
	Tree Protection Fencing at Drip Line	

SURVEY PROVIDED BY:

ALTA / NSPS Land Title Survey Provided by Gremley & Biedermann for Eriksson Engineering on January 28, 2025. Order Number 2024–32526–001.

PROJECT BENCHMARKS

1. Found Cross in Walk, 8.24' South and 0.22' East of Southwest Property Corner.
   Elevation 682.99 NGVD88
2. Found Cross in Walk 9.55' South and 10.68' West of Southeast Property Corner.
   Elevation 682.15 NGVD88

J.U.L.I.E.

Note: The exact location of all utilities shall be verified by the contractor prior to construction activities. For utility locations call: J.U.L.I.E. 1 (800) 892–0123

fgma
FGMA ARCHITECTS
FGM Architects
1 Westbrook Corporate Center
Suite 1000
Westchester, Illinois 60154
630.574.8300 OFFICE
ILLINOIS PROFESSIONAL DESIGN FIRM #184.006186

CIVIL AND LANDSCAPE
ERIKSSON ENGINEERING ASSOCIATES
181 COMMERCE DR, SUITE A
SAVOY, ILLINOIS, 61874
217.352.6606 FAX
IL STATE CERTIFICATE OF AUTHORITY

STRUCTURAL
MCCLUSKEY ENGINEERING CO.
1887 HIGH GROVE LN
NAPERVILLE, ILLINOIS, 60540
630.717.5335 (O) 630.717.5337 (F)
IL STATE CERTIFICATE OF AUTHORITY

M.E.P.FP.
CONSOLIDATED CONSULTING ENGINEERS
224 S MILWAUKEE AVE, SUITE E
WHEELING, ILLINOIS, 60090
847.215.9690 (O)
IL STATE CERTIFICATE OF AUTHORITY

NOT FOR CONSTRUCTION

FOR REVIEW ONLY

Not for regulatory approval, permit or construction.

The information on this document is preliminary or incomplete, not for construction, recording purposes, or implementation.

NO	DATE	ISSUANCE DESCRIPTION
	06/27/2025	BP 1: ISSUED FOR BID
	07/10/2025	BP1: ADDENDA #1
	07/22/2025	MWRD SUBMITTAL
	08/01/2025	BP1: ISSUED FOR 50% CD

FLEET MAINTENANCE FACILITY
VILLAGE OF NORTHBROOK
3504 COMMERCIAL AVENUE, NORTHBROOK, IL

BP 1: ISSUED FOR 50% CD

SITE GEOMETRY PLAN

SHEET NO.
C1.2

JOB NO. 25-4189.01

© 2025 FGM Architects Inc.

5/28/2025 8:37:49 AM
Autodesk Docs://Northbrook Fleet Maintenance Facility/25-4189.01_Northbrook_Fleet_Maintenance_Facility_SD_2024.rvt
Copyright 2024 FGM ARCHITECTS, INC.

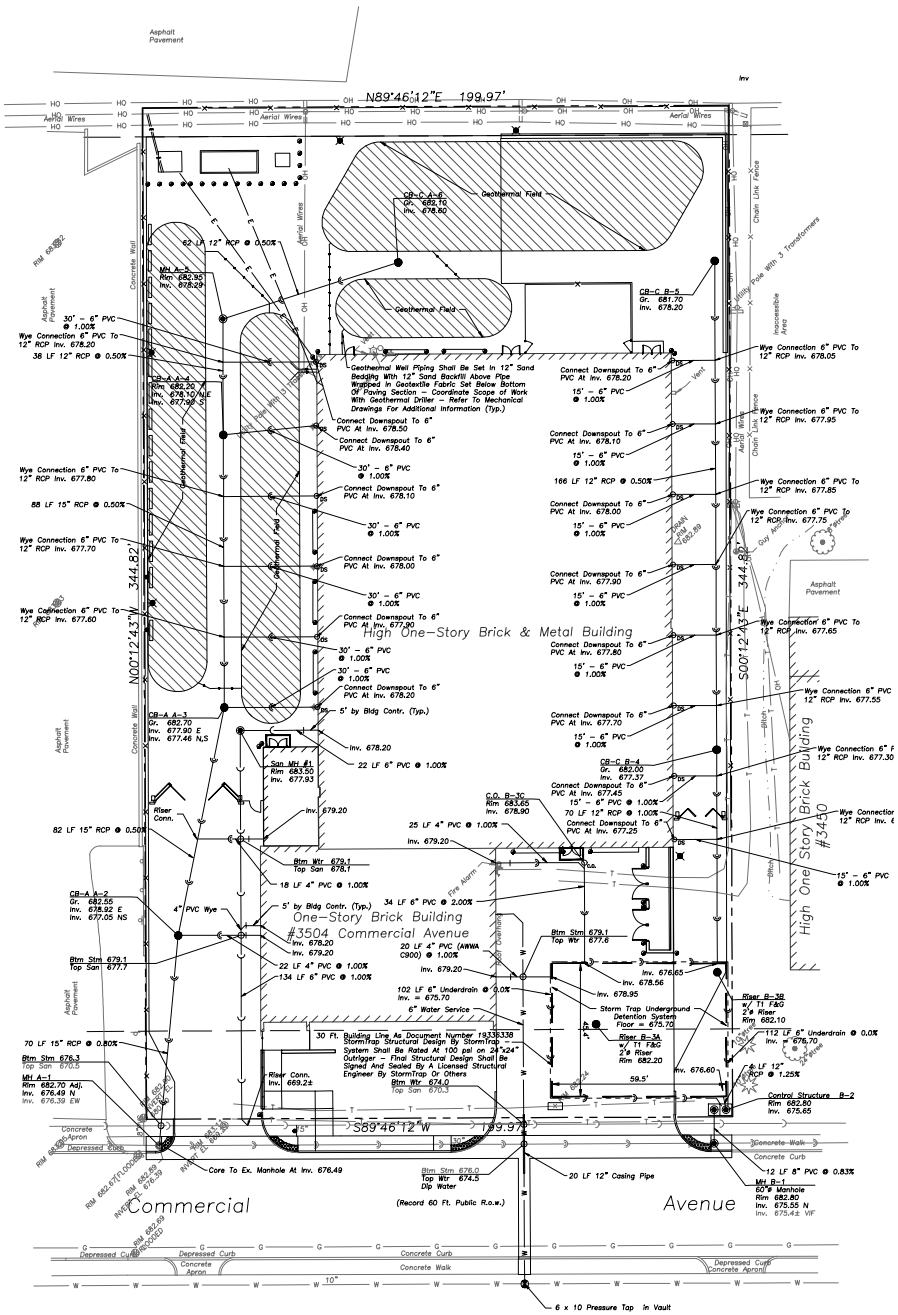

GENERAL NOTES

1. The Location of Existing Underground Utilities, Such As Watermains, Sewers, Gas Lines, Etc., As Shown On The Plans, Has Been Determined From The Best Available Information and Is Given For The Convenience of The Contractor. However, The Owner and The Engineer Do Not Assume Responsibility In The Event That During Construction, Utilities Other Than Those Shown May Be Encountered, and That The Actual Location of Those Which Are Shown May Be Different From The Location As Shown On The Drawings. Contact Engineer Immediately If Surface and/or Subsurface Features Are Different Than Shown On The Drawings.
2. Notify The Engineer Without Delay of Any Discrepancies Between the Drawings and Existing Field Conditions.
3. Contractor Shall Provide Private Utility Locating Services for the Project Area.
4. Notify The Owner, Engineer and The Village of Northbrook a Minimum of 48 Hours In Advance of Performing Any Work.
5. All Areas, On or Off Site, Disturbed During Construction Operations and Not Part of the Work As Shown Hereon Shall Be Restored To Original Condition to the Satisfaction of the Owner at No Additional Cost to the Owner. It Is Incumbent Upon Contractor to Show That Damaged Areas Were Not Disturbed By Construction Operations.
6. These Drawings Assume That The Contractor Will Utilize An Electronic Drawing File (DWG) to Stake All Site Improvements Accordingly. Contractor Shall Re-Establish Horizontal Control. Horizontal Control Points Not Provided.
7. No Person May Utilize The Information Contained Within These Drawings Without Written Approval From Eriksson Engineering Associates, Ltd.
8. The Engineer Is Furnishing These Drawings For Construction Purposes As A Convenience To The Owner, Architect, Surveyor, or Contractor. Prior To The Use Of These Drawings For Construction Purposes, The User Of This Media Shall Verify All Dimensions And Locations Of Buildings With The Foundation Drawings And Architectural Site Plan, and Coordinate All Dimensions and Locations of All Site Items. If Conflicts Exist The User Of This Information Shall Contact The Engineer Immediately.
9. Provide An As-built Survey Prepared By A Licensed Professional Land Surveyor In Accordance With The Authorities Having Jurisdiction Which Shall Include As a Minimum All Detention Basins and Best Management Practices, Include All Storm and Sanitary Sewers, Structure Locations, Sizes, Rim and Invert Elevations, Final Detention Volume Calculations For The Basin(s), Watermain and Valve and Appurtenance Locations. Provide Photograph Of Restrictor Plate(s) Including Ruler Across Opening For Verification Of Restrictor Diameter.
10. The Illinois Department Of Transportation Standard Specifications For Road And Bridge Construction Latest Edition, And All Addenda Thereto, Shall Govern The Earthwork And Paving Work Under This Contract Unless Noted Otherwise.

UTILITY NOTES

1. This Project Is Located In A Separate Sewer Area.
2. Utility Service Lines as Shown Hereon are Approximate. Coordinate The Exact Locations With The Plumbing Drawings. Coordinate The Locations With The Plumbing Contractor and/or the Owner's Construction Representative Prior to Installation of Any New Utilities.
3. Refer to Plumbing Drawings for Continuation of All Utilities Within 5 Feet of Building Face.
4. Field Verify Invert & Locations of Existing Utility Mains Prior to Installing Any On-Site Utilities or Structures. All Elevations and Inverts Referencing Said Utility Shall Be Field Verified Prior To Installation Of Any New Structures Or Utilities, and Adjustments Shall Be Made as Necessary. Contact Engineer Prior to Installation If Discrepancy Exists With These Drawings.
5. Coordinate the Relocation Of Any Utilities Encountered And Replacement Of Any Utilities Damaged Within Influence Zone Of New Construction. Contact Engineer If The Existing Utilities Vary Appreciably From The Plans.
6. All Water Main and Services Shall Be Installed at a Minimum Depth of 5.5' From Top of Finished Ground Elevation to Top of Main.
7. Protection Of Water Supplies Shall Be As Described In Section 370.350 Of The Illinois Recommended Standards For Sewage Works Or Section 41-2.01 Of The Standard Specifications For Water and Sewer Main Construction in Illinois, Latest Edition.
8. Clean Out All Existing and Proposed Storm Inlets and Catch Basins at the Completion of Construction.
9. The "Standard Specifications for Water and Sewer Main Construction In Illinois", Current Edition Shall Govern Work Where Applicable.
10. Adjust Frame Elevations Of All Structures Located Within The Limits Of The Project To Match Proposed Elevations. Add Or Remove Adjusting Rings As Necessary And Install New Mortar At Rings And Frame. Install New Chimney Seals On Any Sanitary Structures Being Adjusted.
11. Obtain As-Built Information For All Pipes, In Accordance With As-Built Document Requirements, Prior To The Installation Of Any Inlet Hoods Or Trash Racks.

STRUCTURE NOTES

1. All Catch Basins to Be Installed in Paved Areas Shall Have Neenah R2504-D Frame & Grate or Approved Equal.
2. All Catch Basins to Be Installed in Landscaped Areas Shall Have Neenah R4340-B / R2504-D Frame & Grate or Approved Equal. For Cone Sections Install a Minimum of 4" Grade Rings For Topsoil Respread. For Flat Slab Tops Install the Following Minimum Height of Grade Rings:
   4' Diameter Structure- 4"
   5' Diameter Structure- 6"
   6' Diameter Structure- 8"
3. All Catch Basins to Be Installed Along Curb and Gutter (B-6.12) Shall Have Neenah R3281-A Frame & Grate or Approved Equal.
4. All Catch Basins to Be Installed Along Depressed Curb and Gutter (Dep B-6.12) Shall Have East Jordan Iron Works 5120 Catch Basin Inlet Frame and Grate, or Approved Equal.
5. Where Structures are Shown Along the Curbline, Unless Specifically Stated Otherwise, it is Intended That the Frame of the Structure is To Fall Within the Flowline Of The Gutter or at the Pavement Edge Where No Gutter Exists.
6. All Manholes Shall Have Neenah R1713-B Frame & Closed Lid or Approved Equal, with "Storm" or "Sanitary" Imprinted as Appropriate.
7. For All Structures Indicated to be Adjusted, Remove and Install Adjusting Rings, Cone Section, Barrel Sections, or Flat Slab Top as Necessary.
8. All Flared End Sections 12" and Larger Shall Include an IDOT Standard Grate.
9. All Flared End Sections Shall Be Concrete.
10. All Sanitary Manholes Shall Include a Chimney Seal.

SURVEY PROVIDED BY:

ALTA / NSPS Land Title Survey Provided by Gremley & Biedermann for Eriksson Engineering on January 28, 2025. Order Number 2024-32526-001.

PROJECT BENCHMARKS

1. Found Cross in Walk, 8.24' South and 0.22' East of Southwest Property Corner.
   Elevation 682.99 NGVD88
2. Found Cross in Walk 9.55' South and 10.68' West of Southeast Property Corner.
   Elevation 682.15 NGVD88



LEGEND

EXISTING		PROPOSED
	Manhole	
	Drainage Structure	
	Drainage Structure	
	Area Drain	
	Clean Out	
	Flared End Section	
	Storm Sewer	
	Sanitary Sewer	
	Combined Sewer	
W	Water Main	W
G	Gas Line	G
OH	Overhead Wires	OH
E	Electrical Cable (Buried)	E
T	Telephone Line	T
	Fire Hydrant	
	Valve Vault	
	Buffalo Box	
DS	Downspout	DS
	Bollard	
WOL	Gas Valve	
	Gas Meter	
	Electric Meter	
	Electric Manhole	
	Hand Hole	
	Light Pole	
	Light Pole w/ Mast Arm	
	Utility Pole	
	Telephone Pedestal	
	Telephone Manhole	
	Sign	
	Fence	
	Accessible Parking Stall	
	Curb & Gutter	
	Depressed Curb	
x C 782.50	Curb Elevation	C 782.50
x G 782.00	Gutter Elevation	G 782.00
x P 783.25	Pavement Elevation	P 783.25
x W 782.10	Sidewalk Elevation	W 782.10
x 784.0	Ground Elevation	x 784.0
x T/W 785.20	Top of Retaining Wall Elevation	T/W 785.20
	Swale	
781	Contour Line	781
	Deciduous Tree	
	Coniferous Tree	
	Brushline	
	Tree Protection Fencing at Drip Line	

J.U.L.I.E.

Note: The exact location of all utilities shall be verified by the contractor prior to construction activities. For utility locations call: J.U.L.I.E. 1 (800) 892-0123

fgma
FGMA ARCHITECTS
FGM Architects
1 Westbrook Corporate Center
Suite 1000
Westchester, Illinois 60154
630.574.8300 OFFICE
ILLINOIS PROFESSIONAL DESIGN FIRM 315-001116

CIVIL AND LANDSCAPE
ERIKSSON ENGINEERING ASSOCIATES
105 COMMONS DR, SUITE A
DEKALB, ILLINOIS, 60030
847.215.6604 CO
IL STATE CERTIFICATE OF AUTHORITY

STRUCTURAL
MCCLUSKEY ENGINEERING CO.
1887 WGH GROVE LN
NAPERVILLE, ILLINOIS, 60540
630.717.5335 (O) 630.717.5337 (F)
IL STATE CERTIFICATE OF AUTHORITY

M.E.P.FP.
CONSOLIDATED CONSULTING ENGINEERS
224 S MILWAUKEE AVE, SUITE E
WHEELING, ILLINOIS, 60090
847.215.9690 (O)
IL STATE CERTIFICATE OF AUTHORITY

NOT FOR CONSTRUCTION

FOR REVIEW ONLY

Not for regulatory approval, permit or construction.

The information on this document is preliminary or incomplete, not for construction, recording purposes, or implementation.

NO	DATE	ISSUANCE DESCRIPTION
	06/27/2025	BP 1: ISSUED FOR BID
	07/10/2025	BP1: ADDENDA #1
	07/22/2025	MWRD SUBMITTAL
	08/01/2025	BP1: ISSUED FOR 50% CD

FLEET MAINTENANCE FACILITY
VILLAGE OF NORTHBROOK
3504 COMMERCIAL AVENUE, NORTHBROOK, IL

BP 1: ISSUED FOR 50% CD

SITE UTILITY PLAN

SHEET NO.
C1.3

JOB NO. 25-4189.01

© 2025 FGM Architects Inc.

5/28/2025 8:37:49 AM
Autodesk Docs://Northbrook Fleet Maintenance Facility/25-4189.01_Northbrook_Fleet_Maintenance_Facility_SD_2024.rvt
Copyright 2024 FGM ARCHITECTS, INC.

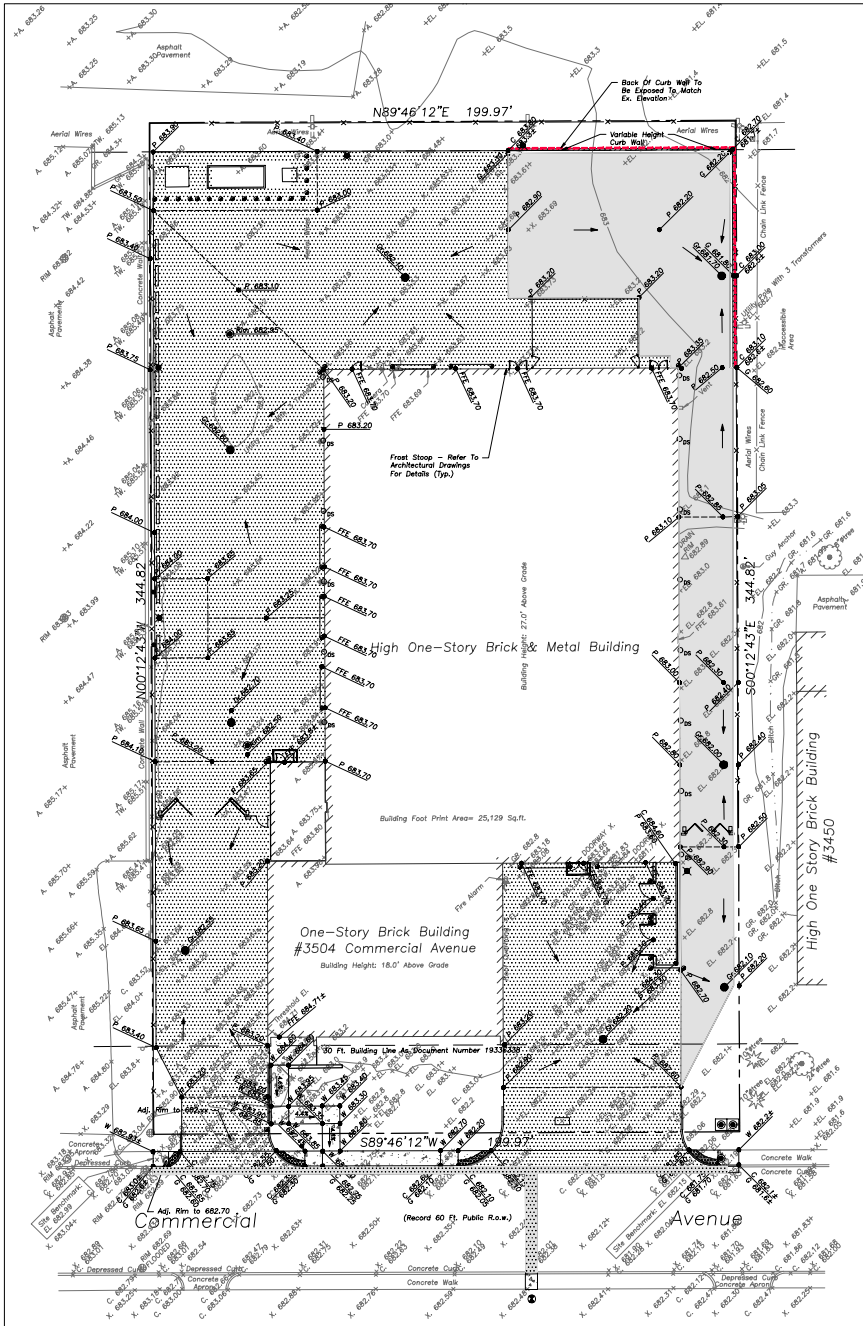

GENERAL NOTES

1. The Location of Existing Underground Utilities, Such As Watermains, Sewers, Gas Lines, Etc., As Shown On The Plans, Has Been Determined From The Best Available Information and Is Given For The Convenience of The Contractor. However, The Owner and The Engineer Do Not Assume Responsibility In The Event That During Construction, Utilities Other Than Those Shown May Be Encountered, and That The Actual Location of Those Which Are Shown May Be Different From The Location As Shown On The Drawings. Contact Engineer Immediately If Surface and/or Subsurface Features Are Different Than Shown On The Drawings.
2. Notify The Engineer Without Delay of Any Discrepancies Between the Drawings and Existing Field Conditions.
3. Contractor Shall Provide Private Utility Locating Services for the Project Area.
4. Notify The Owner, Engineer and The Village of Northbrook a Minimum of 48 Hours In Advance of Performing Any Work.
5. All Areas, On or Off Site, Disturbed During Construction Operations and Not Part of the Work As Shown Hereon Shall Be Restored To Original Condition to the Satisfaction of the Owner at No Additional Cost to the Owner. It Is Incumbent Upon Contractor to Show That Damaged Areas Were Not Disturbed By Construction Operations.
6. These Drawings Assume That The Contractor Will Utilize An Electronic Drawing File (DWG) to Stake All Site Improvements Accordingly. Contractor Shall Re–Establish Horizontal Control. Horizontal Control Points Not Provided.
7. No Person May Utilize The Information Contained Within These Drawings Without Written Approval From Eriksson Engineering Associates, Ltd.
8. The Engineer Is Furnishing These Drawings For Construction Purposes As A Convenience To The Owner, Architect, Surveyor, or Contractor. Prior To The Use Of These Drawings For Construction Purposes, The User Of This Media Shall Verify All Dimensions And Locations Of Buildings With The Foundation Drawings And Architectural Site Plan, and Coordinate All Dimensions and Locations of All Site Items. If Conflicts Exist The User Of This Information Shall Contact The Engineer Immediately.
9. Provide An As–built Survey Prepared By A Licensed Professional Land Surveyor In Accordance With The Authorities Having Jurisdiction Which Shall Include As a Minimum All Detention Basins and Best Management Practices, Include All Storm and Sanitary Sewers, Structure Locations, Sizes, Rim and Invert Elevations, Final Detention Volume Calculations For The Basin(s), Watermain and Valve and Appurtenance Locations. Provide Photograph Of Restrictor Plate(s) Including Ruler Across Opening For Verification Of Restrictor Diameter.
10. The Illinois Department Of Transportation Standard Specifications For Road And Bridge Construction Latest Edition, And All Addenda Thereto, Shall Govern The Earthwork And Paving Work Under This Contract Unless Noted Otherwise.

GRADING NOTES

1. The Grading and Construction of Proposed Improvements Shall Be Done In A Manner Which Will Allow For Positive Drainage, and Not Cause Ponding of Stormwater on the Surface of Proposed Improvements.
2. All Landscaped Areas Disturbed By Construction Shall Be Respread With 6 Inches (Min.) to 12 Inches (Max.) Topsoil and Hydroseeded Unless Noted Otherwise On The Landscape Drawings.
3. Refer to Architectural Drawings for Locations and Patterns of Expansion and Control Joints in Concrete Pavement and Sidewalks.
4. Accessible Parking Spaces and Loading Spaces Shall Be Sloped at Maximum 2.0% in Any Direction. Maximum Sidewalk Cross Slopes Shall be 2.0%. Maximum Longitudinal Sidewalk Slope Shall Be 4.3%. Contact Engineer If Conflicts Exist.
5. Adjust Frame Elevations Of All Structures Located Within The Limits Of The Project To Match Proposed Elevations. Add Or Remove Adjusting Rings As Necessary And Install New Mortar At Rings And Frame. Install New Chimney Seals On Any Sanitary Structures Being Adjusted
6. Conditions May Require Contractor to Excavate Clay Borrow Pit in Order to Produce Suitable Fill Material for Building Pad Preparation or Site Paving. Borrow Pit Shall Not Be Located In Proposed Hardscape Areas. Contractor Shall Backfill Borrow Pit to Meet Proposed Grades, or Existing Grades in Otherwise Undisturbed Areas, and May Use Topsoil and Unsuitable Material to Backfill. Review Soil Studies Prior to Excavation.

SURVEY PROVIDED BY:

ALTA / NSPS Land Title Survey Provided by Gremley & Biedermann for Eriksson Engineering on January 28, 2025. Order Number 2024–32526–001.

PROJECT BENCHMARKS

1. Found Cross in Walk, 8.24' South and 0.22' East of Southwest Property Corner.
   Elevation 682.99 NGVD88
2. Found Cross in Walk 9.55' South and 10.68' West of Southeast Property Corner.
   Elevation 682.15 NGVD88



LEGEND

EXISTING		PROPOSED
◉	Manhole	◉
⊕	Drainage Structure	●
□	Drainage Structure	■
△	Area Drain	▲
○CO	Clean Out	○CO
◁	Flared End Section	◁
–S–	Storm Sewer	–S–
–S–	Sanitary Sewer	–S–
–C–	Combined Sewer	–C–
–W–	Water Main	–W–
–G–	Gas Line	–G–
–OH–	Overhead Wires	–OH–
–E–	Electrical Cable (Buried)	–E–
–T–	Telephone Line	–T–
	Fire Hydrant	
⊗	Valve Vault	
	Buffalo Box	
○DS	Downspout	○DS
○BOL	Bollard	
	Gas Valve	
	Gas Meter	
	Electric Meter	
	Electric Manhole	
	Hand Hole	
	Light Pole	
	Light Pole w/ Mast Arm	
	Utility Pole	
	Telephone Pedestal	
	Telephone Manhole	
	Sign	
	Fence	
	Accessible Parking Stall	
	Curb & Gutter	
	Depressed Curb	
x C 782.50	Curb Elevation	C 782.50
x G 782.00	Gutter Elevation	G 782.00
x P 783.25	Pavement Elevation	P 783.25
x W 782.10	Sidewalk Elevation	W 782.10
x 784.0	Ground Elevation	x 784.0
x T/W 785.20	Top of Retaining Wall Elevation	T/W 785.20
	Swale	
781	Contour Line	781
	Deciduous Tree	
	Coniferous Tree	
	Brushline	
	Tree Protection Fencing at Drip Line	

PAVING & SURFACE LEGEND

- Heavy–Duty Asphalt Pavement Section
  2" Hot Mix Asphalt,Mix D, IL–9.5, N50
  3" Hot Mix Asphalt, IL–19.0, N50
  Prime Coat (0.25 gal/sq yd)
  6" Aggregate Base Course, Type B, Crushed, CA–6
  4" Drainage Course, CA–7
  Non–Woven Geotextile Fabric, 8 oz
- Concrete Driveway Section
  8" Portland Cement Concrete
  Curing and Sealing Compound
  6"x6" W2.9xW2.9 Welded Wire Fabric
  6" Aggregate Base Course, Type B, Crushed
- Concrete Sidewalk Section
  5" Portland Cement Concrete
  Curing and Sealing Compound
  6"x6" W1.4xW1.4 Welded Wire Fabric
  2" Aggregate Base Course, Type B, Crushed
- Concrete Street Patching
  7" Portland Cement Concrete
  4" Aggregate Base Course, Type B, Crushed
  See Detail on C5.1 For Reinforcement
- Stormwater Overland Flow Path
- Ridge Line/High Point

J.U.L.I.E.

Note: The exact location of all utilities shall be verified by the contractor prior to construction activities. For utility locations call: J.U.L.I.E. 1 (800) 892–0123

fgma
FGMARCHITECTS
FGM Architects
1 Westbrook Corporate Center
Suite 1000
Westchester, Illinois 60154
630.574.6300 OFFICE
ILLINOIS PROFESSIONAL DESIGN FIRM 315-003186

CIVIL AND LANDSCAPE
ERIKSSON ENGINEERING ASSOCIATES
191 COMMERCE DR, SUITE A
GRAYSLAKE, ILLINOIS, 60030
847.223.4804 (O)
IL STATE CERTIFICATE OF AUTHORITY

STRUCTURAL
MCCLUSKEY ENGINEERING CO.
1887 HIGH GROVE LN
NAPERVILLE, ILLINOIS, 60540
630.717.5335 (O) 630.717.5337 (F)
IL STATE CERTIFICATE OF AUTHORITY

M.E.P.FP.
CONSOLIDATED CONSULTING ENGINEERS
224 S MILWAUKEE AVE, SUITE E
WHEELING, ILLINOIS, 60090
847.215.9690 (O)
IL STATE CERTIFICATE OF AUTHORITY

NOT FOR CONSTRUCTION

FOR REVIEW ONLY

Not for regulatory approval, permit or construction.

The information on this document is preliminary or incomplete, not for construction, recording purposes, or implementation.

NO	DATE	ISSUANCE DESCRIPTION
	06/27/2025	BP 1: ISSUED FOR BID
	07/10/2025	BP1: ADDENDA #1
	07/22/2025	MWRD SUBMITTAL
	08/01/2025	BP1: ISSUED FOR 50% CD

FLEET MAINTENANCE FACILITY
VILLAGE OF NORTHBROOK
3504 COMMERCIAL AVENUE, NORTHBROOK, IL

BP 1: ISSUED FOR 50% CD

SITE GRADING AND PAVING PLAN

SHEET NO.
C1.4

JOB NO. 25-4189.01

© 2025 FGM Architects Inc.

5/28/2025 8:37:49 AM
Autodesk Docs://Northbrook Fleet Maintenance Facility/25-4189.01_Northbrook_Fleet_Maintenance_Facility_SD_2024.rvt
Copyright 2024 FGM ARCHITECTS, INC.

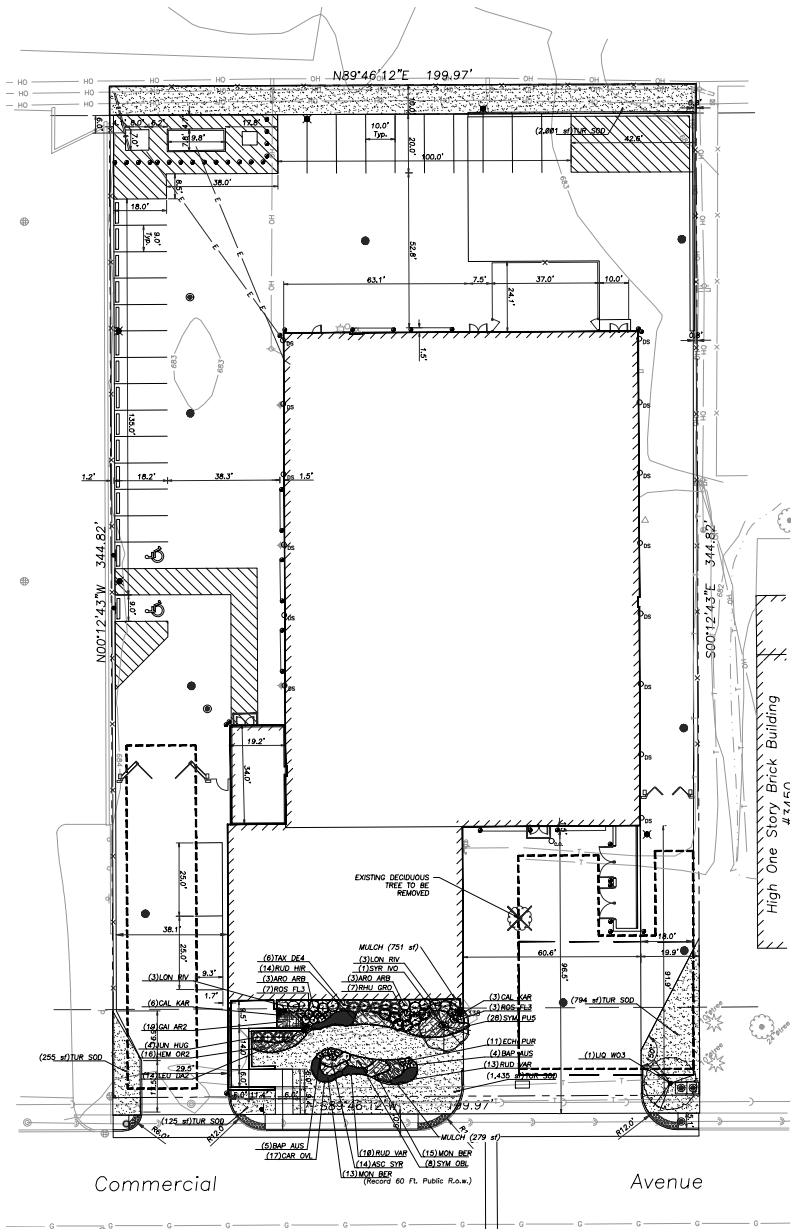

PLANT SCHEDULE

SYMBOL	CODE	BOTANICAL / COMMON NAME	COND	SIZE	QTY
CANOPY TREES					
	LIQ W03	LIQUIDAMBAR STYRACIFLUA 'WORPLESDON' / WORPLESDON SWEET GUM	B & B	3" CAL.	1
UNDERSTORY TREES					
	SYR IVO	SYRINGA RETICULATA 'IVORY SILK' / IVORY SILK JAPANESE TREE LILAC	B & B	2.5" CAL.	1
SYMBOL	**CODE**	**BOTANICAL / COMMON NAME**	**COND.**	**SIZE**	**QTY**
DECIDUOUS SHRUBS					
	ARO ARB	ARONIA ARBUTIFOLIA / RED CHOKEBERRY	B & B	36" HT.	6
	LON RIV	DIERVILLA X 'G2X88544' / KODIAK® ORANGE DIERVILLA	CONT.	36" HT.	6
	RHU GRO	RHUS AROMATICA 'GRO-LOW' / GRO-LOW FRAGRANT SUMAC	CONT.	#5	7
	ROS FL3	ROSA X 'FLOWER CARPET CORAL' / ROSE	CONT.	24" SPREAD	18
EVERGREEN SHRUBS					
	JUN HUG	JUNIPERUS HORIZONTALIS 'HUGHES' / HUGHES JUNIPER	B & B	24" SPREAD.	4
	TAX DE4	TAXUS X MEDIA / DENSE YEW	B & B	36" HT.	6
GRASSES					
	CAL KAR	CALAMAGROSTIS X ACUTIFLORA 'KARL FOERSTER' / KARL FOERSTER FEATHER REED GRASS	CONT.	#1	9
PERENNIALS					
	BAP AUS	BAPTISIA AUSTRALIS / BLUE WILD INDIGO	CONT.	#3	9
SYMBOL	**CODE**	**BOTANICAL / COMMON NAME**	**COND**	**SIZE**	**QTY**
PERENNIALS					
	GAI AR2	GAILLARDIA X GRANDIFLORA 'ARIZONA SUN' / ARIZONA SUN BLANKETFLOWER	CONT.	#1	19
	HEM OR2	HEMEROCALLIS X 'STELLA DE ORO' / STELLA DE ORO DAYLILY	CONT.	#1	16
	LEU DA2	LEUCANTHEMUM X SUPERBUM 'DAISY MAY' / SHASTA DAISY	CONT.	#1	14
	RUD HIR	RUDBECKIA HIRTA / BLACK-EYED SUSAN	CONT.	#1	14
	SYM PU5	SYMPHYOTRICHUM NOVAE-ANGLIAE 'PURPLE DOME' / NEW ENGLAND ASTER	CONT.	#1	28
RAIN GARDEN					
	ASC SYR	ASCLEPIAS SYRIACA / COMMON MILKWEED	CONT.	#1	14
	CAR OVL	CAREX BREVIOR / OVAL SEDGE	CONT.	#1	17
	ECH PUR	ECHINACEA PURPUREA / CONEFLOWER	CONT.	#1	11
	MON BER	MONARDA FISTULOSA / BERGAMOT	CONT.	#1	28
	RUD VAR	RUDBECKIA FULGIDA FULGIDA / ORANGE CONEFLOWER	CONT.	#1	23
	SYM OBL	SYMPHYOTRICHUM OBLONGIFOLIUM / FALL ASTER	CONT.	#1	8
TURF GRASS					
	TUR SOD	TURF SOD / DROUGHT TOLERANT FESCUE BLEND	SOD	S.F.	4,618 SF

SITE MATERIALS SCHEDULE

	MULCH	1,030 SF

LANDSCAPE NOTES:

1. PLANT QUANTITIES SHOWN IN THE PLANT SCHEDULE ARE FOR CONVENIENCE ONLY. THE CONTRACTOR IS RESPONSIBLE FOR PROVIDING AND INSTALLING ALL MATERIALS SHOWN ON THE PLAN AND SHOULD NOT RELY ON THE PLANT SCHEDULE FOR DETERMINING QUANTITIES.
2. ALL PLANT MATERIALS SHALL BE NURSERY GROWN STOCK AND SHALL BE FREE FROM ANY DEFORMITIES, DISEASES OR INSECT DAMAGE. ANY MATERIALS WITH DAMAGED OR CROOKED/DISFIGURED LEADERS, BARK ABRASION, SUNSCALD, INSECT DAMAGE, ETC. ARE NOT ACCEPTABLE AND WILL BE REJECTED. TREES WITH MULTIPLE LEADERS WILL BE REJECTED UNLESS CALLED OUT IN THE PLANT SCHEDULE AS MULTI-STEM. NO PRUNING TO BE DONE AT THE TIME OF INSTALLATION EXCEPT FOR DEAD OR BROKEN LIMBS.
3. ALL LANDSCAPE IMPROVEMENTS SHALL MEET MUNICIPALITY REQUIREMENTS AND GUIDELINES, WHICH SHALL BE VERIFIED BY MUNICIPAL AUTHORITIES.
4. ALL PLANTING OPERATIONS SHALL BE COMPLETED IN ACCORDANCE WITH STANDARD HORTICULTURAL PRACTICES. THIS MAY INCLUDE, BUT NOT BE LIMITED TO, PROPER PLANTING BED AND TREE PIT PREPARATION, PLANTING MIX, PRUNING, STAKING AND GUYING, WRAPPING, SPRAYING, FERTILIZATION, PLANTING AND ADEQUATE MAINTENANCE OF MATERIALS DURING CONSTRUCTION ACTIVITIES.
5. ALL PLANT MATERIALS SHALL BE INSPECTED AND APPROVED BY THE LANDSCAPE ARCHITECT PRIOR TO INSTALLATION. ANY MATERIALS INSTALLED WITHOUT APPROVAL MAY BE REJECTED.
6. THE CONTRACTOR SHALL GUARANTEE PLANT MATERIALS FOR A PERIOD OF ONE YEAR FROM DATE OF ACCEPTANCE BY OWNER. THE CONTRACTOR SHALL OUTLINE PROPER MAINTENANCE PROCEDURES TO THE OWNER AT THE TIME OF ACCEPTANCE. DURING THE GUARANTEE PERIOD, DEAD OR DISEASED MATERIALS SHALL BE REPLACED AT NO COST TO THE OWNER. AT THE END OF THE GUARANTEE PERIOD THE CONTRACTOR SHALL OBTAIN FINAL ACCEPTANCE FROM THE OWNER.
7. ANY EXISTING TREES TO BE RETAINED SHALL BE PROTECTED FROM SOIL COMPACTION AND OTHER DAMAGES THAT MAY OCCUR DURING CONSTRUCTION ACTIVITIES BY ERECTING FENCING AROUND SUCH MATERIALS THE DRIP LINE OF THE TREE TO BE PROTECTED UNLESS SPECIFIED OTHERWISE.
8. ALL GRASS, CLUMPS, OTHER VEGETATION, DEBRIS, STONES, ETC., SHALL BE RAKED OR OTHERWISE REMOVED FROM PLANTING AND LAWN AREAS PRIOR TO INITIATION OF INSTALLATION PROCEDURES.
9. THE CONTRACTOR SHALL VERIFY THE LOCATIONS OF ALL UNDERGROUND UTILITIES PRIOR TO INITIATING PLANTING OPERATIONS. THE CONTRACTOR SHALL REPAIR/ REPLACE AND UTILITY, PAVING, CURBING, ETC., WHICH IS DAMAGED DURING PLANTING OPERATIONS.
10. SIZE AND GRADING STANDARDS OF PLANT MATERIALS SHALL CONFORM TO THE LATEST EDITION OF ANSI Z60.1, AMERICAN STANDARDS FOR NURSERY STOCK, BY THE AMERICAN NURSERY & LANDSCAPE ASSOCIATION.
11. REFER TO PLAT OF SURVEY FOR LEGAL DESCRIPTION, BOUNDARY DIMENSIONS AND EXISTING CONDITIONS.
12. ALL PLANT MATERIAL ON THIS PLANTING PLAN REPRESENTS THE INTENTION AND INTENSITY OF THE PROPOSED LANDSCAPE MATERIAL. THE EXACT SPECIES AND LOCATIONS MAY VARY IN THE FIELD DO TO MODIFICATIONS IN THE SITE IMPROVEMENTS AND THE AVAILABILITY OF PLANT MATERIAL AT THE TIME OF INSTALLATION. ANY SUCH CHANGES MUST FIRST BE APPROVED BY THE CITY IN WRITING
13. ALL PLANT MATERIAL SHALL BE PLANTED WITH A MINIMUM OF SIX INCHES OF ORGANIC SOIL AND MULCHED WITH A SHREDDED BARK MATERIAL TO A MINIMUM 3" DEPTH.
14. ALL BEDS SHALL BE EDGED, HAVE WEED PREEMERGENTS APPLIED AT THE RECOMMENDED RATE.
15. ALL PARKWAYS SHALL HAVE LAWN ESTABLISHED WITH SEED A GROUNDCOVER, UNLESS OTHERWISE NOTED.
16. ALL LAWN AREAS ON THIS PLAN SHALL BE GRADED SMOOTH AND TOPPED WITH AT LEAST 6" OF TOPSOIL. ALL LAWN AREAS TO BE ESTABLISHED USING SOD. ALL TURF GRASS AREAS ADJACENT TO PAVEMENT OR CURB SHALL BE GRADED FLUSH WITH THAT PAVEMENT AND ALLOW POSITIVE DRAINAGE. ANY SETTLEMENT OF THE TURF GRASS AREAS SHALL BE CORRECTED BY THE LANDSCAPE CONTRACTOR AT THE CONTRACTOR'S EXPENSE PRIOR TO FINAL ACCEPTANCE BY OWNER.
17. THIS LANDSCAPE PLAN ASSUMES THE SITE WILL BE PREPARED WITH TOP SOIL SUITABLE FOR THE ESTABLISHMENT OF THE LANDSCAPE MATERIAL PRESENTED ON THIS PLAN. IF ADDITIONAL TOP SOIL IS REQUIRED IT IS UP TO THE LANDSCAPE CONTRACTOR ON THE PROJECT TO PROVIDE, SPREAD AND PREPARE THE SITE AS NEEDED FOR THE IMPLEMENTATION OF THIS LANDSCAPE PLAN.
18. CONTRACTORS MUST VERIFY ALL QUANTITIES AND OBTAIN ALL PROPER PERMITS AND LICENSES FROM THE PROPER AUTHORITIES.
19. ALL MATERIAL MUST MEET INDUSTRY STANDARDS AND THE LANDSCAPE ARCHITECT HAS THE RIGHT TO REFUSE ANY POOR MATERIAL OR WORKMANSHIP.
20. LANDSCAPE ARCHITECT IS NOT RESPONSIBLE FOR UNSEEN SITE CONDITIONS.
21. ALL PLANTINGS SHALL BE SPACED EQUAL DISTANT, BACK FILLED WITH AMENDED SOIL IN A HOLE TWICE THE ROOTBALL DIAMETER, WATERED, FERTILIZED, PRUNED, AND HAVE ALL TAGS AND ROPES REMOVED.
22. LAWN AND BED AREAS SHALL BE ROTOTILLED, RAKED OF CLUMPS AND DEBRIS.
23. REMOVE ALL DEAD AND DISEASED PLANT MATERIAL FROM SITE AND DISPOSE OF PROPERLY.
24. PLANTS TO BE PLANTED SO THAT ROOT FLARE IS AT THE GRADE OF THE AREA WHERE PLANTED. NO PRUNING TO BE DONE AT THE TIME OF INSTALLATION EXCEPT TO REMOVE DEAD OR BROKEN LIMBS.

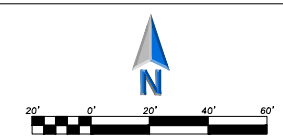

fgma
FGMA ARCHITECTS
FGM Architects
1 Westbrook Corporate Center
Suite 1000
Westchester, Illinois 60154
630.574.8300 OFFICE
ILLINOIS PROFESSIONAL DESIGN FIRM #184-005350

CIVIL AND LANDSCAPE
ERIKSSON ENGINEERING ASSOCIATES
105 CONSULTANCY DR, SUITE A
GRAYSLAKE, ILLINOIS, 60030
847.223.5800 (O)
IL STATE CERTIFICATE OF AUTHORITY

STRUCTURAL
MCCLUSKEY ENGINEERING CO.
1807 W 64 GROVE LN
WARRENVILLE, ILLINOIS, 60540
630.717.5005 (O) 630.717.5007 (F)
IL STATE CERTIFICATE OF AUTHORITY

M.E.P.FP.
CONSOLIDATED CONSULTING ENGINEERS
224 S MILWAUKEE AVE, SUITE E
WHEELING, ILLINOIS, 60090
847.215.0690 (O)
IL STATE CERTIFICATE OF AUTHORITY

NOT FOR CONSTRUCTION

FOR REVIEW ONLY

Not for regulatory approval, permit or construction.

The information on this document is preliminary or incomplete, not for construction, recording purposes, or implementation.

ISSUANCE		
	06/27/2025	BP1: ISSUED FOR BID
	07/27/2025	PROGRESS SET
	08/01/2025	BP1: ISSUED FOR 50% CD

FLEET MAINTENANCE FACILITY
VILLAGE OF NORTHBROOK
3504 COMMERCIAL AVENUE, NORTHBROOK, IL

BP1: ISSUED FOR 50% CD

LANDSCAPE PLAN

SHEET NO.
L1.0

JOB NO. 25 4189.01

© 2024 FGM Architects Inc.

EEA — P:\24140 — FGM — Northbrook Fleet Maintenance Bldg\Drawings\Northbrook Fleet Maintenance Building Landscape Plan.dwg
Plotted: 7/30/25 @ 2:24pm By: sgregory
Copyright 2024 FGM ARCHITECTS, INC.

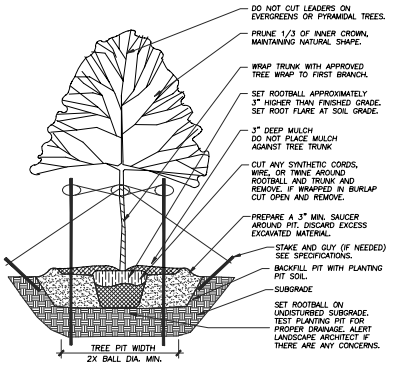

1 TREE PLANTING DETAIL

Not To Scale 329343-01

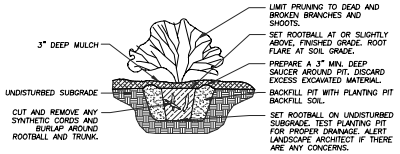

2 SHRUB PLANTING DETAIL

Not To Scale 329333-01

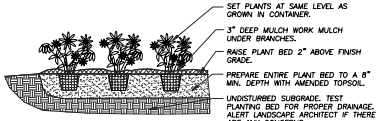

3 ANNUAL, PERENNIAL, & GROUNDCOVER DETAIL

Not To Scale 329301-03

fgma
FGM Architects
1 Westbrook Corporate Center
Suite 1000
Westchester, Illinois 60154
630.574.8300 OFFICE
ILLINOIS PROFESSIONAL DESIGN
FIRM #184-005350

CIVIL AND LANDSCAPE
ERIKSSON ENGINEERING ASSOCIATES
205 COMMERCE DR, SUITE A
GRAYSLAKE, ILLINOIS, 60030
847.223.5800 (O)
IL STATE CERTIFICATE OF AUTHORITY

STRUCTURAL
MCCLUSKEY ENGINEERING CO.
2807 HIGH GROVE LN
NAPERVILLE, ILLINOIS, 60540
630.717.5305 (O) 630.717.5307 (F)
IL STATE CERTIFICATE OF AUTHORITY

M.E.P.FP.
CONSOLIDATED CONSULTING ENGINEERS
224 S MILWAUKEE AVE, SUITE E
WHEELING, ILLINOIS, 60090
847.215.0690 (O)
IL STATE CERTIFICATE OF AUTHORITY

NOT FOR CONSTRUCTION

FOR REVIEW ONLY

Not for regulatory approval, permit or construction.

The information on this document is preliminary or incomplete, not for construction, recording purposes, or implementation.

ISSUANCE	
06/27/2025	BP1: ISSUED FOR BID
07/27/2025	PROGRESS SET
08/01/2025	BP1: ISSUED FOR 50% CD

FLEET MAINTENANCE FACILITY
VILLAGE OF NORTHBROOK
3504 COMMERCIAL AVENUE, NORTHBROOK, IL

BP1: ISSUED FOR 50% CD

LANDSCAPE DETAILS

SHEET NO.
L2.0

JOB NO. 25 4189.01

© 2024 FGM Architects Inc.

EEA — P:\24140 — FGM — Northbrook Fleet Maintenance Bldg\Drawings\Northbrook Fleet Maintenance Building Landscape Plan.dwg
Plotted: 7/30/25 @ 2:13pm By: sgregory
Copyright 2024 FGM ARCHITECTS, INC.