Village Board of Trustees Agenda

Sandra "Sandy" Frum Board Room
1225 Cedar Lane Northbrook, IL 60062
Tuesday, August 12, 2025

7:30 PM

1. **ROLL CALL**
2. **PLEDGE OF ALLEGIANCE**
3. **MINUTES APPROVAL**
   A. July 22, 2025 Regular Board Meeting Minutes for Approval
4. **PUBLIC COMMENT TIME**

   This agenda item is reserved for members of the public who desire to address the Village Board on a topic that is within purview and jurisdiction of the Village Board, but that is not listed in another location on the agenda. If you would like to speak about a matter that is listed on the agenda, we ask that you wait until that agenda item is called, and we will give you an opportunity to speak then. If your matter is on the "Consent Agenda", please let us know if you would like us to remove that matter so that you can speak about it.
   Anyone desiring to speak should fill out a written speaker form (located in the back of the Board Room) and submit it to the Village Clerk. "Public Comment Time" is not a forum for open dialogue or engagement with members of the Village Board. Rather, it is intended as an opportunity for you to make comments to the Village Board. While the Village Board will not immediately respond to public comments at this meeting, or engage in a back and forth discussion during the meeting, please be assured that the Board is actively listening to all comments, thoughts, and suggestions.
   All speakers will be limited to a total of three minutes. We request that everyone be respectful, civil, and non-repetitive; and we ask that members of the audience refrain from applauding or making any other comments during or after any speaker. Thank you for your understanding and taking the time to contribute to the success of our community.

5. **MANAGER'S REPORT**
6. **WARRANT LIST**
   A. Review and Approval of Escrow Deposits/Performance Bond Refunds Processed Between July 16, 2025 - July 31, 2025
   B. Review and Approval of Payments Processed Between July 16, 2025 - July 31, 2025
7. **PRESIDENT'S REPORT**

   Community Moment

   A. Commission Appointments and Reappointments
   Appointments:
   - Maleeh Zafar to the Disability Inclusion Committee for a term ending April 30, 2028

   Reappointments:
   - Randi Gillespie and Laura Florek to the Disability Inclusion Committee for a term ending April 30, 2028
   - Cecily Stash (student) to the Sustainability Committee for a term ending June 30, 2026

8. CONSENT AGENDA

The matters listed for consideration on the Consent Agenda are matters that appear to have the unanimous support of the Board of Trustees. The Village President will review, designate the resolution or ordinance number for passage and then inquire if any member of the Board or member of the public objects to any item on the Consent Agenda. If any objections are raised, the matter will be removed from the Consent Agenda and relocated to a location on this agenda for consideration during the appropriate Board Committee report. If no objection is voiced, the Village President will request a motion and second for passage of all items listed. The resultant roll call vote on the Consent Agenda will be applicable to each individual agenda item.

A. A Resolution Authorizing a Contract for Replacement of a Sanitary Sewer Lift Station Generator with Interstate Power Systems, Inc. of Carol Stream, Illinois
The backup generator at 135 Skokie Boulevard has been identified for replacement due to its age and condition. The unit is also no longer supported by the manufacturer, making replacement parts for the unit difficult to source.

B. A Resolution Authorizing an Amendment to the Contract with Miller Pipeline, LLC of Mount Prospect, IL for the 2025 Landwehr Road Sidewalk Improvements Project
Due to unanticipated conditions in the field, an increase funding available under the contingency for the contract 2025 Landwehr Road Sidewalk Improvements Project is requested.

C. A Resolution Approving an Agreement for the 2025 Sidewalk Replacement Program with Schroeder and Schroeder, Inc. of Skokie, Illinois
The Village systematically surveys public sidewalks to identify locations to install Americans with Disabilities Act (ADA) required ramps at intersections and replace sidewalk squares and/or sections that are deemed defective and/or deteriorated and potentially create a hazard. In addition select curbs adjacent to the sidewalks may be replaced.

D. A Resolution Authorizing an Agreement for Water System Leak Detection Services with ADS Environmental Services of Chicago, Illinois
A Village contracts for a survey of the water system to proactively locate leaks that have not yet been identified. The Village makes the necessary repairs on a scheduled basis before they escalate into larger leaks or water main breaks.

E. A Resolution Waiving Competitive Bidding and Authorizing an Agreement for Cemetery Burials & Related Services with Property Werks of Northern Illinois, Inc. D/B/A Professional Cemetery Services of Dundee, Illinois
The Village currently owns three municipal cemeteries: the North Northfield Cemetery, the Northfield Union Cemetery and St. Peter Cemetery and contracts for related services.

F. A Resolution Authorizing an Agreement for Staffing and Organizational Planning Services with Citygate Associates, LLC of Folsom, CA
As proposed in the FY26 Budget, an analysis of the Police Department's current staffing and service delivery levels and methods by an experienced consultant is recommended to partner with the Department and to develop strategic recommendations for future programming, staffing, and service levels.

G. Motion to Approve the June 24, 2025 Closed Session Minutes held during the Committee of the Whole of the Village Board

9. ADMINISTRATION AND FINANCE

10. PLANNING AND ECONOMIC DEVELOPMENT

A. Public Hearing to consider a request for a Pre-Annexation Agreement for 3803 Oak Avenue (PPA-25-05)
A public hearing has been scheduled to consider a pre-annexation agreement for a single-family lot in the Mission Hills neighborhood of Northbrook.

B. A Resolution Authorizing the Approval and Execution of the Pre-Annexation Agreement by and between Village of Northbrook and Richard Little and Vanessa Walton as the Owner of 3803 Oak Avenue (PPA-25-05)
Consideration of a Resolution to approve a pre-annexation agreement for a single-family lot in the Mission Hills neighborhood of Northbrook.

C. Public Hearing for BOT-25-11: 1307 Shermer Road - Ira Holtzman - Zoning Variations for Detached Garage and Parking Improvements in C-1/VGO District
The applicant and property owner is requesting zoning variations to allow construction of a detached garage and associated parking improvements. The property is in the Village Green Overlay (VGO) District and therefore, requires approval by the Board of Trustees.

D. An Ordinance Granting Variations For Building Height And Yard Setback For A Detached Garage And Parking Improvements In C-1/VGO District (1307 Shermer Road) (Docket No. BOT-25-11)
Consideration of an Ordinance to approve variations for building height and yard setback requirements for a detached garage and parking improvements in C-1/VGO District.

E. Preliminary Review of a Request by Little Einstein's Academy & Daycare Inc. for a Special Permit for Child Daycare Facility at 755 Huehl Road
The applicant intends to operate a child daycare facility in a vacant tenant space occupied previously by the same use but different business operator with an existing accessory outdoor play area.

F. Preliminary Review of a Request by Huntington National Bank for a Special Permit for an Accessory Drive-Through Facility at 40 Skokie Boulevard
The applicant intends to modify a portion of the parking lot and construct an ATM drive-through facility for Huntington National Bank, which will be a tenant within the building on-site.

G. Preliminary Review of a Request by Crown Castle GT Company LC for a Special Permit for Personal Wireless Services Antenna located on a Tower-Style Structure in Excess of District Height Limitations and a Variation to reduce the required distance between the existing personal wireless service antenna tower and nearby structures from 110' to 69' at 180 Anets Drive
The applicant is requesting to maintain the continued operation of wireless antenna equipment on a tower style structure in the IB Institutional Building District.

11. COMMUNITY AND SUSTAINABILITY

12. HOUSING

13. LABOR RELATIONS

14. PUBLIC WORKS AND FACILITIES

15. PUBLIC SAFETY

16. COMMUNICATIONS AND OUTREACH

17. REMARKS FOR THE GOOD OF THE ORDER

18. CLOSED SESSION

19. ADJOURN

The Village of Northbrook is subject to the requirements of the Americans with Disabilities Act of 1990. Individuals with disabilities who plan to attend this meeting and who require certain accommodations in order to allow them to observe or participate in this meeting, or who have questions regarding the accessibility of the meeting or facilities, are requested to promptly contact the Village of Northbrook at (847) 272-5050, or the Illinois Relay Center at (800) 526-0844, to allow the Village of Northbrook to make reasonable accommodations for those persons.

VILLAGE OF NORTHBROOK

GENERAL LEDGER SYSTEM
WARRANT LIST

ESCROW DEPOSIT/PERFORMANCE BOND REFUNDS
INVOICES PROCESSED BETWEEN JULY 16, 2025 - JULY 31, 2025
FOR 8/12/25 MEETING

CHECK NUMBER	VENDOR NAME	PURPOSE	AMOUNT
310259	GLENBROOK HIGH SCHOOL DISTRICT 225	PASS-THROUGH IMPACT FEE	3,245.00
310260	NORTHBROOK SCHOOL DIST. #27	PASS-THROUGH IMPACT FEE	9,084.44
310261	NICHOLAS PARFITT	ESCROW DEPOSIT/PERFORMANCE BOND REFUND	300.00
310262	FOCUS DEVELOPMENT INC	ESCROW DEPOSIT/PERFORMANCE BOND REFUND	368.00
310263	OLYMPIK SIGNS INC.	ESCROW DEPOSIT/PERFORMANCE BOND REFUND	288.83
310264	NORTHBROOK PUBLIC LIBRARY	PASS-THROUGH IMPACT FEE	959.96
310265	SILVERMAN CO INC	ESCROW DEPOSIT/PERFORMANCE BOND REFUND	33.60
310266	DOUGLAS IP	ESCROW DEPOSIT/PERFORMANCE BOND REFUND	1,000.00
310267	HALLORAN & YAUCH INC	ESCROW DEPOSIT/PERFORMANCE BOND REFUND	500.00
310268	NORTHBROOK PARK DISTRICT	PASS-THROUGH IMPACT FEE	11,960.00
310269	SUN CLOUD HEALTH	ESCROW DEPOSIT/PERFORMANCE BOND REFUND	1,500.00
310270	1200 SHERMER LLC	ESCROW DEPOSIT/PERFORMANCE BOND REFUND	339.69
310271	AMERICAN NATIONAL SPRINKLER	ESCROW DEPOSIT/PERFORMANCE BOND REFUND	500.00
310272	BALTIC BUILDERS	ESCROW DEPOSIT/PERFORMANCE BOND REFUND	1,000.00
310273	RESCUE PLUMBING	ESCROW DEPOSIT/PERFORMANCE BOND REFUND	500.00
310274	EMERGENCY ROOTER SERVICES	ESCROW DEPOSIT/PERFORMANCE BOND REFUND	500.00
310275	JIAZHEN CHEN	ESCROW DEPOSIT/PERFORMANCE BOND REFUND	500.00
310276	ANGELO DIPAOLO	ESCROW DEPOSIT/PERFORMANCE BOND REFUND	872.55
310277	KLOEPFER CONSTRUCTION	ESCROW DEPOSIT/PERFORMANCE BOND REFUND	500.00
310278	LEXINGTON HOMES LLC	ESCROW DEPOSIT/PERFORMANCE BOND REFUND	3,000.00
310279	ALEX CARLSON	ESCROW DEPOSIT/PERFORMANCE BOND REFUND	72.00
310280	CLEAR PIPE, INC	ESCROW DEPOSIT/PERFORMANCE BOND REFUND	500.00
310281	ASAP REMODELING SERVICES	ESCROW DEPOSIT/PERFORMANCE BOND REFUND	500.00
310282	ADR CUSTOM BUILDERS, INC	ESCROW DEPOSIT/PERFORMANCE BOND REFUND	2,100.00
310283	SPORTS LINE	ESCROW DEPOSIT/PERFORMANCE BOND REFUND	43.12
310284	JAROSLAW WASEWICZ	ESCROW DEPOSIT/PERFORMANCE BOND REFUND	2,600.00
310285	CROSSROADS NORTHBROOK, LLC	ESCROW DEPOSIT/PERFORMANCE BOND REFUND	521.26
310286	NORTHBROOK PARK DISTRICT	PASS-THROUGH IMPACT FEE	11,960.00
310287	RAVINIA PLUMBING & HEATING CO.	ESCROW DEPOSIT/PERFORMANCE BOND REFUND	500.00
310288	RAIN & GREEN LAWN SPRINKLER SYSTEMS	ESCROW DEPOSIT/PERFORMANCE BOND REFUND	500.00
310289	R.B. PLUMBING AND SEWER, INC.	ESCROW DEPOSIT/PERFORMANCE BOND REFUND	500.00
310290	AMERICAN NATIONAL SPRINKLER	ESCROW DEPOSIT/PERFORMANCE BOND REFUND	500.00
		CLASS 'A' TOTAL	**57,248.45**

VILLAGE OF NORTHBROOK

GENERAL LEDGER SYSTEM
WARRANT LIST

INVOICES PROCESSED BETWEEN JULY 16, 2025 - JULY 31, 2025
FOR 8/12/25 MEETING

Sorted Alphabetically

CHECK NUMBER	VENDOR NAME	PURPOSE	AMOUNT
7695(A)	A.W. ZENGELER CLEANERS, INC.	SERVICES - PD	166.02
310356	ACCURATE EMPLOYMENT SCREENING, LLC	PROFESSIONAL SERVICES - GG	268.34
310319	ACE NORTHBROOK HARDWARE & RENTAL	SUPPLIES - PW/FD/PD	538.82
7675(A)	ADVANCED TREE CARE	SERVICES - PW	2,630.00
7676(A)	AIR ONE EQUIPMENT INC	EQUIPMENT - PW/FD	19,764.00
7699(A)	AL WARREN OIL CO INC	FUEL/OIL - PW/FD/PD	23,550.80
310378	ALAN SMITH	REIMBURSEMENT - PD	76.12
310379	ALEXANDER GIARMIDIS	REIMBURSEMENT- PD	114.69
310366	ALLIANCE LAUNDRY SYSTEMS DISTR. LLC	SERVICES - FD	309.68
7677(A)	ALPHA PRIME COMMUNICATIONS	RADIO LICENSE - PW	1,300.00
310291	ALTEC INDUSTRIES INC.	SERVICES - PW	981.33
310380	AMANDA JAEGERS	REIMBURSEMENT - PD	493.45
310376	AMANDA WRANN	REIMBURSEMENT - PD	28.45
7700(A)	AMAZON.COM SERVICES, INC.	EQUIPMENT/SUPPLIES - PW/PD/IT/FD/FIN/GG	3,241.74
310364	AMERICAN TAXI DISPATCH, INC	SENIOR TRANSPORTATION - FIN	265.00
310381	ANGELO WELLS	REIMBURSEMENT - PD	198.80
310374	ANITA BOZIC	REIMBURSEMENT - FIN	142.95
310351	APEX LANDSCAPING INC.	SERVICES - PW	158.40
7678(A)	ARLINGTON POWER EQUIPMENT	EQUIPMENT - PW	870.00
310296	ARTHUR CLESEN, INC.	SUPPLIES - PW	225.36
310295	AT&T MOBILITY NATIONAL ACCOUNTS LLC	TELECOMMUNICATIONS - IT	11,720.08
310346	AXON ENTERPRISE, INC.	CONFERENCES - PD	2,196.00
310363	BIG BELLY SOLAR LLC	TRASH/RECYCLING RECEPTACLES - PW (*)	2,171.98
310372	BLUEPEARL VETERINARY PARTNER	K-9 CARE - PD	1,363.49
310397	BONNIE SIEGEL	REIMBURSEMENT - GG	126.22
310399	BRADLEY SABIN	REIMBURSEMENT - PW	214.15
310382	BRADON PRATE	REIMBURSEMENT - PD	206.39
310293	BRANIFF COMMUNICATIONS INC.	SERVICES - FD	428.00
7680(A)	BS&A SOFTWARE	SOFTWARE MAINTENANCE - IT (*)	78,071.00
310350	BUILDERS ASPHALT, LLC	MATERIALS - PW (*)	934.36
7697(A)	CABCONNECT	SENIOR TRANSPORTATION - FIN	72.40
7709(A)	CAHILL HEATING & COOLING	SERVICES - PW	2,120.00
310325	CASH	PETTY CASH - FD	211.19
7683(A)	CDW GOVERNMENT INC.	EQUIPMENT - IT	860.94
7707(A)	CHICAGO PARTS & SOUND ENTERP. LLC	PARTS - PD	303.17
310294	CHICAGO TRIBUNE	PUBLICATIONS - DPS/PW	289.55
310340	CINTAS CORPORATION #2	UNIFORMS - PW	151.04
7702(A)	CLARK HILL PLC	LEGAL SERVICES - GG	7,373.00
310373	CMXI CONSULTANTS, INC	PROFESSIONAL SERVICES - PD	600.00
7681(A)	COMCAST	TELECOMMUNICATIONS - IT	2,735.10
7682(A)	COMCAST	TELECOMMUNICATIONS - IT	2,734.02
7705(A)	CONSTELLIX	SUBSCRIPTION - IT	14.69
310297	COOK COUNTY RECORDER OF DEEDS	RECORDING FEES - DPS/GG	399.00
310298	COSTAR REALTY INFORMATION INC.	SUBSCRIPTION - DPS	1,082.99
310359	CPAH	PROFESSIONAL SERVICES - DPS (*)	4,385.00
310371	CROWNE INDUSTRIES, LTD	SERVICES - PW	1,695.00
310345	CUMMINS SALES AND SERVICE	SERVICES - FD	3,626.82
310404	CURTIS WILENS	WATER/SEWER REFUND - FIN	35.36
310396	DAN COOK	REIMBURSEMENT - PW	220.00
310383	DORACELY CHAVEZ	REIMBURSEMENT - PD	287.08
310384	DORIS OTERO	REIMBURSEMENT - PD	195.11
310299	EL-COR INDUSTRIES, INC.	SUPPLIES - PW	1,544.38

VILLAGE OF NORTHBROOK

GENERAL LEDGER SYSTEM
WARRANT LIST

INVOICES PROCESSED BETWEEN JULY 16, 2025 - JULY 31, 2025
FOR 8/12/25 MEETING

Sorted Alphabetically

CHECK NUMBER	VENDOR NAME	PURPOSE	AMOUNT
310321	ENDEAVOR HEALTH MEDICAL GROUP	PROFESSIONAL SERVICES - PW	604.00
7712(A)	ENECON CORPORTION	SUPPLIES - PW	825.00
310385	ERIC GUSTASON	REIMBURSEMENT - PD	249.93
310395	EUGENE DABROWSKI	REIMBURSEMENT - PW	222.10
310300	FIELDS JEEP INC/FIELDS CHRYSLER	PARTS - PD	1,086.68
7696(A)	FIRE SAFETY CONSULTANTS, INC	PROFESSIONAL SERVICES - FD (*)	4,140.00
7698(A)	FIRST CHOICE COFFEE SERVICES	CANTEEN - PD/PW	352.23
310365	FLECK'S LANDSCAPING	SERVICES - PW (*)	4,107.00
310292	G.W. BERKHEIMER CO., INC.	SUPPLIES - PW	292.69
7684(A)	GALLS, LLC	UNIFORMS - PD	3,550.32
7711(A)	GENUINE PARTS COMPANY INC.	PARTS - PD/PW/FD	1,274.62
310367	GORDON FLESCH COMPANY INC.	PRINTING - IT (*)	2,480.92
310348	HEALTH INSPECTION PROFESSIONALS INC	SERVICES - DPS	5,500.00
310362	HFS BUREAU OF FISCAL OPERATIONS	GEMT INTERGOVERNMENTAL PAYMENT - FD	225,915.19
310336	HIGH STAR TRAFFIC	SUPPLIES - PW	994.50
7686(A)	HIGHLAND PARK FORD LINCOLN	PARTS - PD	445.71
310301	IDLEWOOD ELECTRIC SUPPLY, INC.	SUPPLIES - PW	956.76
310302	IL HOMICIDE INVESTIGATORS ASSOC.	TRAINING - PD	1,180.00
310303	ILLINOIS SECRETARY OF STATE	LICENSE PLATES - PD	151.00
310304	ILLINOIS STATE POLICE	RECORDS SCREENING - GG	54.00
310305	IMAGING OFFICE SYSTEMS, INC	SERVICES - IT	1,390.00
310306	INDUSTRIAL ORGANIZATIONAL SOLUTIONS	PROFESSIONAL SERVICES - FD	2,375.00
310349	INSIGHT PUBLIC SECTOR, INC	SUBSCRIPTION - IT	2,946.99
310307	INTERSTATE ALL BATTERY CENTER	SUPPLIES - PW	86.40
310308	J.G. UNIFORMS, INC.	UNIFORMS - PD	3,181.35
310386	JAMES FRIEL	REIMBURSEMENT - PD	200.81
310387	JASON STEINER	REIMBURSEMENT - PD	40.00
310388	JEFFREY ZIEBKA	REIMBURSEMENT - PD	451.90
310309	JOHN S. NEENAN	SUPPLIES - PW	417.60
310389	JONATHAN SALMI	REIMBURSEMENT - PD	96.58
310368	JRLX, INC	SUPPLIES - FD	293.38
310406	KASPER & NOTTAGE, P.C.	LEGAL SERVICES - GG	7,000.00
310407	KATHERINE CARNEY	REIMBURSEMENT - DPS	625.78
310402	KHALDOUN FAKHOURY	WATER/SEWER REFUND - FIN	8.71
7687(A)	KIESLER POLICE SUPPLY, INC.	SUPPLIES - PD	594.98
310310	KIMLEY-HORN AND ASSOCIATES INC	PROFESSIONAL SERVICES - PW (*)	23,483.00
310398	KITTIE YOHE	REIMBURSEMENT- GG	72.90
310311	LAKE COUNTY HOSE AND EQUIPMENT INC	PARTS - PW/FD	159.75
310312	LAKE COUNTY PUBLIC WORKS DEPT	SERVICES - PW	645.00
7710(A)	LAKELAND ELEVATOR CORPORATION	SERVICES - PW (*)	2,106.62
7688(A)	LAUTERBACH & AMEN, LLP	PROFESSIONAL SERVICES - FIN (*)	41,200.00
310313	LEACH ENTERPRISES, INC	PARTS - FD	2,436.61
310360	LINDE GAS & EQUIPMENT INC.	SUPPLIES - FD/PW	368.95
7689(A)	LOGSDON OFFICE SUPPLY	SUPPLIES - FIN	34.49
7701(A)	MACQUEEN EMERGENCY GROUP	PARTS - FD	1,044.83
310405	MARK JESSELSON	WATER/SEWER REFUND - FIN	5.12
7706(A)	MARYLAND NATIVES NURSERY INC	SPRING TREE GIVEAWAY - GG	2,851.75
7690(A)	MC MASTER-CARR SUPPLY COMPANY	SUPPLIES - PW	59.22
310314	MENONI & MOCOGNI, INC.	MATERIALS - PW (*)	2,531.60
7704(A)	MESCADA LLC	SERVICES - PW	1,408.00
310315	METROPOLITAN WATER RECLAMATION	SEWER CHARGES - PW	2,322.32
310390	MICHAEL TRACY	REIMBURSEMENT - PD	186.70

VILLAGE OF NORTHBROOK

GENERAL LEDGER SYSTEM
WARRANT LIST

INVOICES PROCESSED BETWEEN JULY 16, 2025 - JULY 31, 2025
FOR 8/12/25 MEETING

Sorted Alphabetically

CHECK NUMBER	VENDOR NAME	PURPOSE	AMOUNT
7691(A)	MOTION INDUSTRIES, INC.	PARTS - PW	623.29
310320	NICOR	UTILITIES - PW	743.52
310316	NIPSTA	TRAINING - FD (*)	1,807.20
310317	NORTH AMERICAN CORPORATION OF IL	SUPPLIES - PW	1,865.05
310353	NORTH SHORE LAWNSPRINKLER	SERVICES - PW	1,962.22
310318	NORTHBROOK TOYOTA	SERVICES - PW	2,908.32
310323	NORTHWEST FREIGHTLINER	PARTS - PW	486.88
310322	NORTHWEST POLICE ACADEMY	TRAINING - PD	25.00
310401	PAUL BRODSKY	VEHICLE STICKER REFUND - FIN	35.00
310358	PEERLESS NETWORK, INC.	TELECOMMUNICATIONS - IT	6,183.25
7692(A)	POMP'S TIRE SERVICE, INC.	TIRES - PW	600.12
310326	PROMO'S 911, INC.	SUPPLIES - PD	1,119.27
310327	REGIONAL EMERGENCY DISPATCH CENTER	DISPATCH - FD	59,809.00
310352	RICKMAN CONTRACT SERVICES, INC.	SERVICES - FIN (*)	6,900.00
310328	RLB HYDRAULIC SERVICES	SERVICE - PW	342.04
310391	ROBERT BUJAK	REIMBURSEMENT - PD	156.99
310400	ROBERT SATEK	RESIDENT REIMBURSEMENT - PW	3,700.00
7679(A)	ROSE MARY JURINEK	COURT REPORTING - PD	1,260.00
310329	RUSH TRUCK CENTERS OF ILLINOIS	PARTS - PW	2,055.27
310324	SCHROEDER ASPHALT SERVICES INC.	ASPHALT ST REHABILITATION - PW (*)	215,418.65
310392	SCOTT LUBIAK	REIMBURSEMENT - PD	88.00
310393	SCOTT PLEPEL	REIMBURSEMENT - PD	308.49
310377	SEAN BARRY	REIMBURSEMENT - PD	118.99
310394	SHARI NIVASCH	REIMBURSEMENT - PD	40.00
310370	SHAUGHNESSY & ASSOCIATES	PROFESSIONAL SERVICES - PD	250.00
310403	SHAUN GLAZER	WATER/SEWER REFUND - FIN	99.14
310330	SNAP-ON INCORPORATED	SERVICES - PW	1,675.70
310331	STANDARD EQUIPMENT COMPANY	PARTS - PW	483.76
310344	STATE GRAPHICS	PRINTING - PD/FIN	417.00
310332	STERNBERG LANTERNS, INC.	PARTS - PW	820.00
310375	STEVE DRAZNER	REIMBURSEMENT - FIN	224.82
310333	SUNSET FOOD MART, INC.	CANTEEN/SUPPLIES - FD/PD	91.65
310354	SYMMETRY ENERGY SOLUTIONS, LLC	UTILITIES - PW	1,124.21
310334	SYN-TECH SYSTEMS, INC.	PARTS - PW	100.00
7703(A)	THE ORGANIC GARDENER LTD	PROFESSIONAL SERVICES - DPS (*)	12,396.00
310335	THOMPSON ELEVATOR INSPECTION	SERVICES - DPS	2,075.00
310361	T-MOBILE USA INC.	TELECOMMUNICATION - PD	50.00
310355	TODAY'S UNIFORMS INC.	UNIFORMS - FD (*)	1,205.60
310337	ULINE, INC.	FURNITURE - PW	2,377.49
7708(A)	UNIVAR SOLUTIONS USA LLC	CHEMICALS - PW (*)	5,503.61
310338	UPCYCLE PRODUCTS INC.	RAIN BARRELS - GG	2,300.00
7685(A)	USABLUEBOOK	SUPPLIES - PW	220.00
310343	WATERWAY GAS AND WASH COMPANY	SERVICES - PD	999.25
310357	WAUCONDA ANIMAL HOSPITAL	K-9 CARE - PD	340.00
7693(A)	WEIDNER FARMS MATERIAL INC.	MATERIALS DISPOSAL - PW (*)	714.50
7694(A)	WEST CENTRAL MUNICIPAL CONFERENCE	PARKWAY TREE PLANTING - PW (*)	3,168.00
310339	WEST SIDE TRACTOR SALES	SUPPLIES/PARTS- PW	2,270.94
310341	WHEEL-INN BODY & MOTOR WORKS	SERVICES - PD	2,499.57
310342	WILSON LAWN & LANDSCAPE, LLC	SERVICES - PW	396.00
310369	WOODBINE HILL KENNEL	K-9 CARE - PD	255.00
310347	ZOLL MEDICAL CORP	SUPPLIES - FD	631.40
		CLASS 'A' TOTAL	**889,945.64**

VILLAGE OF NORTHBROOK

GENERAL LEDGER SYSTEM
WARRANT LIST

INVOICES PROCESSED BETWEEN JULY 16, 2025 - JULY 31, 2025
FOR 8/12/25 MEETING

Sorted Alphabetically

CHECK NUMBER	VENDOR NAME	PURPOSE	AMOUNT
	CLASS 'B' WARRANTS		
1(E)	DELUXE	SUPPLIES - FIN	239.52
23(E)	HUNTINGTON NATIONAL BANK	VILLAGE CREDIT CARD JUNE - FIN	26,772.25
468(E)	LOWE'S	SUPPLIES - PW	1,685.52
310258	NORTHBROOK POSTMASTER	SUBSCRIPTION - FIN	1,080.00
7/31/25	PAYROLL	7/31/2025 PAYROLL	915,910.53
469(E)	QUADIENT FINANCE USA, INC.	POSTAGE - FIN	4,000.00
310257	THOMSON REUTERS	SUBSCRIPTION - PD	332.67
		CLASS 'B' TOTAL	**950,020.49**
		REPORT TOTAL	***1,839,966.13***

VILLAGE OF NORTHBROOK

GENERAL LEDGER SYSTEM
WARRANT LIST

INVOICES PROCESSED BETWEEN JULY 16, 2025 - JULY 31, 2025
FOR 8/12/25 MEETING

Sorted by Invoice Amount

CHECK NUMBER	VENDOR NAME	PURPOSE	AMOUNT
310362	HFS BUREAU OF FISCAL OPERATIONS	GEMT INTERGOVERNMENTAL PAYMENT - FD	225,915.19
310324	SCHROEDER ASPHALT SERVICES INC.	ASPHALT ST REHABILITATION - PW (*)	215,418.65
7680(A)	BS&A SOFTWARE	SOFTWARE MAINTENANCE - IT (*)	78,071.00
310327	REGIONAL EMERGENCY DISPATCH CENTER	DISPATCH - FD	59,809.00
7688(A)	LAUTERBACH & AMEN, LLP	PROFESSIONAL SERVICES - FIN (*)	41,200.00
7699(A)	AL WARREN OIL CO INC	FUEL/OIL - PW/FD/PD	23,550.80
310310	KIMLEY-HORN AND ASSOCIATES INC	PROFESSIONAL SERVICES - PW (*)	23,483.00
7676(A)	AIR ONE EQUIPMENT INC	EQUIPMENT - PW/FD	19,764.00
7703(A)	THE ORGANIC GARDENER LTD	PROFESSIONAL SERVICES - DPS (*)	12,396.00
310295	AT&T MOBILITY NATIONAL ACCOUNTS LLC	TELECOMMUNICATIONS - IT	11,720.08
7702(A)	CLARK HILL PLC	LEGAL SERVICES - GG	7,373.00
310406	KASPER & NOTTAGE, P.C.	LEGAL SERVICES - GG	7,000.00
310352	RICKMAN CONTRACT SERVICES, INC.	SERVICES - FIN (*)	6,900.00
310358	PEERLESS NETWORK, INC.	TELECOMMUNICATIONS - IT	6,183.25
7708(A)	UNIVAR SOLUTIONS USA LLC	CHEMICALS - PW (*)	5,503.61
310348	HEALTH INSPECTION PROFESSIONALS INC	SERVICES - DPS	5,500.00
310359	CPAH	PROFESSIONAL SERVICES - DPS (*)	4,385.00
7696(A)	FIRE SAFETY CONSULTANTS, INC	PROFESSIONAL SERVICES - FD (*)	4,140.00
310365	FLECK'S LANDSCAPING	SERVICES - PW (*)	4,107.00
310400	ROBERT SATEK	RESIDENT REIMBURSEMENT - PW	3,700.00
310345	CUMMINS SALES AND SERVICE	SERVICES - FD	3,626.82
7684(A)	GALLS, LLC	UNIFORMS - PD	3,550.32
7700(A)	AMAZON.COM SERVICES, INC.	EQUIPMENT/SUPPLIES - PW/PD/IT/FD/FIN/GG	3,241.74
310308	J.G. UNIFORMS, INC.	UNIFORMS - PD	3,181.35
7694(A)	WEST CENTRAL MUNICIPAL CONFERENCE	PARKWAY TREE PLANTING - PW (*)	3,168.00
310349	INSIGHT PUBLIC SECTOR, INC	SUBSCRIPTION - IT	2,946.99
310318	NORTHBROOK TOYOTA	SERVICES - PW	2,908.32
7706(A)	MARYLAND NATIVES NURSERY INC	SPRING TREE GIVEAWAY - GG	2,851.75
7681(A)	COMCAST	TELECOMMUNICATIONS - IT	2,735.10
7682(A)	COMCAST	TELECOMMUNICATIONS - IT	2,734.02
7675(A)	ADVANCED TREE CARE	SERVICES - PW	2,630.00
310314	MENONI & MOCOGNI, INC.	MATERIALS - PW (*)	2,531.60
310341	WHEEL-INN BODY & MOTOR WORKS	SERVICES - PD	2,499.57
310367	GORDON FLESCH COMPANY INC.	PRINTING - IT (*)	2,480.92
310313	LEACH ENTERPRISES, INC	PARTS - FD	2,436.61
310337	ULINE, INC.	FURNITURE - PW	2,377.49
310306	INDUSTRIAL ORGANIZATIONAL SOLUTIONS	PROFESSIONAL SERVICES - FD	2,375.00
310315	METROPOLITAN WATER RECLAMATION	SEWER CHARGES - PW	2,322.32
310338	UPCYCLE PRODUCTS INC.	RAIN BARRELS - GG	2,300.00
310339	WEST SIDE TRACTOR SALES	SUPPLIES/PARTS- PW	2,270.94
310346	AXON ENTERPRISE, INC.	CONFERENCES - PD	2,196.00
310363	BIG BELLY SOLAR LLC	TRASH/RECYCLING RECEPTACLES - PW (*)	2,171.98
7709(A)	CAHILL HEATING & COOLING	SERVICES - PW	2,120.00
7710(A)	LAKELAND ELEVATOR CORPORATION	SERVICES - PW (*)	2,106.62
310335	THOMPSON ELEVATOR INSPECTION	SERVICES - DPS	2,075.00
310329	RUSH TRUCK CENTERS OF ILLINOIS	PARTS - PW	2,055.27
310353	NORTH SHORE LAWNSPRINKLER	SERVICES - PW	1,962.22
310317	NORTH AMERICAN CORPORATION OF IL	SUPPLIES - PW	1,865.05
310316	NIPSTA	TRAINING - FD (*)	1,807.20
310371	CROWNE INDUSTRIES, LTD	SERVICES - PW	1,695.00
310330	SNAP-ON INCORPORATED	SERVICES - PW	1,675.70
310299	EL-COR INDUSTRIES, INC.	SUPPLIES - PW	1,544.38

VILLAGE OF NORTHBROOK

GENERAL LEDGER SYSTEM
WARRANT LIST

INVOICES PROCESSED BETWEEN JULY 16, 2025 - JULY 31, 2025
FOR 8/12/25 MEETING

Sorted by Invoice Amount

CHECK NUMBER	VENDOR NAME	PURPOSE	AMOUNT
7704(A)	MESCADA LLC	SERVICES - PW	1,408.00
310305	IMAGING OFFICE SYSTEMS, INC	SERVICES - IT	1,390.00
310372	BLUEPEARL VETERINARY PARTNER	K-9 CARE - PD	1,363.49
7677(A)	ALPHA PRIME COMMUNICATIONS	RADIO LICENSE - PW	1,300.00
7711(A)	GENUINE PARTS COMPANY INC.	PARTS - PD/PW/FD	1,274.62
7679(A)	ROSE MARY JURINEK	COURT REPORTING - PD	1,260.00
310355	TODAY'S UNIFORMS INC.	UNIFORMS - FD (*)	1,205.60
310302	IL HOMICIDE INVESTIGATORS ASSOC.	TRAINING - PD	1,180.00
310354	SYMMETRY ENERGY SOLUTIONS, LLC	UTILITIES - PW	1,124.21
310326	PROMO'S 911, INC.	SUPPLIES - PD	1,119.27
310300	FIELDS JEEP INC/FIELDS CHRYSLER	PARTS - PD	1,086.68
310298	COSTAR REALTY INFORMATION INC.	SUBSCRIPTION - DPS	1,082.99
7701(A)	MACQUEEN EMERGENCY GROUP	PARTS - FD	1,044.83
310343	WATERWAY GAS AND WASH COMPANY	SERVICES - PD	999.25
310336	HIGH STAR TRAFFIC	SUPPLIES - PW	994.50
310291	ALTEC INDUSTRIES INC.	SERVICES - PW	981.33
310301	IDLEWOOD ELECTRIC SUPPLY, INC.	SUPPLIES - PW	956.76
310350	BUILDERS ASPHALT, LLC	MATERIALS - PW (*)	934.36
7678(A)	ARLINGTON POWER EQUIPMENT	EQUIPMENT - PW	870.00
7683(A)	CDW GOVERNMENT INC.	EQUIPMENT - IT	860.94
7712(A)	ENECON CORPORTION	SUPPLIES - PW	825.00
310332	STERNBERG LANTERNS, INC.	PARTS - PW	820.00
310320	NICOR	UTILITIES - PW	743.52
7693(A)	WEIDNER FARMS MATERIAL INC.	MATERIALS DISPOSAL - PW (*)	714.50
310312	LAKE COUNTY PUBLIC WORKS DEPT	SERVICES - PW	645.00
310347	ZOLL MEDICAL CORP	SUPPLIES - FD	631.40
310407	KATHERINE CARNEY	REIMBURSEMENT - DPS	625.78
7691(A)	MOTION INDUSTRIES, INC.	PARTS - PW	623.29
310321	ENDEAVOR HEALTH MEDICAL GROUP	PROFESSIONAL SERVICES - PW	604.00
7692(A)	POMP'S TIRE SERVICE, INC.	TIRES - PW	600.12
310373	CMXI CONSULTANTS, INC	PROFESSIONAL SERVICES - PD	600.00
7687(A)	KIESLER POLICE SUPPLY, INC.	SUPPLIES - PD	594.98
310319	ACE NORTHBROOK HARDWARE & RENTAL	SUPPLIES - PW/FD/PD	538.82
310380	AMANDA JAEGERS	REIMBURSEMENT - PD	493.45
310323	NORTHWEST FREIGHTLINER	PARTS - PW	486.88
310331	STANDARD EQUIPMENT COMPANY	PARTS - PW	483.76
310388	JEFFREY ZIEBKA	REIMBURSEMENT - PD	451.90
7686(A)	HIGHLAND PARK FORD LINCOLN	PARTS - PD	445.71
310293	BRANIFF COMMUNICATIONS INC.	SERVICES - FD	428.00
310309	JOHN S. NEENAN	SUPPLIES - PW	417.60
310344	STATE GRAPHICS	PRINTING - PD/FIN	417.00
310297	COOK COUNTY RECORDER OF DEEDS	RECORDING FEES - DPS/GG	399.00
310342	WILSON LAWN & LANDSCAPE, LLC	SERVICES - PW	396.00
310360	LINDE GAS & EQUIPMENT INC.	SUPPLIES - FD/PW	368.95
7698(A)	FIRST CHOICE COFFEE SERVICES	CANTEEN - PD/PW	352.23
310328	RLB HYDRAULIC SERVICES	SERVICE - PW	342.04
310357	WAUCONDA ANIMAL HOSPITAL	K-9 CARE - PD	340.00
310366	ALLIANCE LAUNDRY SYSTEMS DISTR. LLC	SERVICES - FD	309.68
310393	SCOTT PLEPEL	REIMBURSEMENT - PD	308.49
7707(A)	CHICAGO PARTS & SOUND ENTERP. LLC	PARTS - PD	303.17
310368	JRLX, INC	SUPPLIES - FD	293.38
310292	G.W. BERKHEIMER CO., INC.	SUPPLIES - PW	292.69

VILLAGE OF NORTHBROOK

GENERAL LEDGER SYSTEM
WARRANT LIST

INVOICES PROCESSED BETWEEN JULY 16, 2025 - JULY 31, 2025
FOR 8/12/25 MEETING

Sorted by Invoice Amount

CHECK NUMBER	VENDOR NAME	PURPOSE	AMOUNT
310294	CHICAGO TRIBUNE	PUBLICATIONS - DPS/PW	289.55
310383	DORACELY CHAVEZ	REIMBURSEMENT - PD	287.08
310356	ACCURATE EMPLOYMENT SCREENING, LLC	PROFESSIONAL SERVICES - GG	268.34
310364	AMERICAN TAXI DISPATCH, INC	SENIOR TRANSPORTATION - FIN	265.00
310369	WOODBINE HILL KENNEL	K-9 CARE - PD	255.00
310370	SHAUGHNESSY & ASSOCIATES	PROFESSIONAL SERVICES - PD	250.00
310385	ERIC GUSTASON	REIMBURSEMENT - PD	249.93
310296	ARTHUR CLESEN, INC.	SUPPLIES - PW	225.36
310375	STEVE DRAZNER	REIMBURSEMENT - FIN	224.82
310395	EUGENE DABROWSKI	REIMBURSEMENT - PW	222.10
310396	DAN COOK	REIMBURSEMENT - PW	220.00
7685(A)	USABLUEBOOK	SUPPLIES - PW	220.00
310399	BRADLEY SABIN	REIMBURSEMENT - PW	214.15
310325	CASH	PETTY CASH - FD	211.19
310382	BRADON PRATE	REIMBURSEMENT - PD	206.39
310386	JAMES FRIEL	REIMBURSEMENT - PD	200.81
310381	ANGELO WELLS	REIMBURSEMENT - PD	198.80
310384	DORIS OTERO	REIMBURSEMENT - PD	195.11
310390	MICHAEL TRACY	REIMBURSEMENT - PD	186.70
7695(A)	A.W. ZENGELER CLEANERS, INC.	SERVICES - PD	166.02
310311	LAKE COUNTY HOSE AND EQUIPMENT INC	PARTS - PW/FD	159.75
310351	APEX LANDSCAPING INC.	SERVICES - PW	158.40
310391	ROBERT BUJAK	REIMBURSEMENT - PD	156.99
310340	CINTAS CORPORATION #2	UNIFORMS - PW	151.04
310303	ILLINOIS SECRETARY OF STATE	LICENSE PLATES - PD	151.00
310374	ANITA BOZIC	REIMBURSEMENT - FIN	142.95
310397	BONNIE SIEGEL	REIMBURSEMENT - GG	126.22
310377	SEAN BARRY	REIMBURSEMENT - PD	118.99
310379	ALEXANDER GIARMIDIS	REIMBURSEMENT- PD	114.69
310334	SYN-TECH SYSTEMS, INC.	PARTS - PW	100.00
310403	SHAUN GLAZER	WATER/SEWER REFUND - FIN	99.14
310389	JONATHAN SALMI	REIMBURSEMENT - PD	96.58
310333	SUNSET FOOD MART, INC.	CANTEEN/SUPPLIES - FD/PD	91.65
310392	SCOTT LUBIAK	REIMBURSEMENT - PD	88.00
310307	INTERSTATE ALL BATTERY CENTER	SUPPLIES - PW	86.40
310378	ALAN SMITH	REIMBURSEMENT - PD	76.12
310398	KITTIE YOHE	REIMBURSEMENT- GG	72.90
7697(A)	CABCONNECT	SENIOR TRANSPORTATION - FIN	72.40
7690(A)	MC MASTER-CARR SUPPLY COMPANY	SUPPLIES - PW	59.22
310304	ILLINOIS STATE POLICE	RECORDS SCREENING - GG	54.00
310361	T-MOBILE USA INC.	TELECOMMUNICATION - PD	50.00
310387	JASON STEINER	REIMBURSEMENT - PD	40.00
310394	SHARI NIVASCH	REIMBURSEMENT - PD	40.00
310404	CURTIS WILENS	WATER/SEWER REFUND - FIN	35.36
310401	PAUL BRODSKY	VEHICLE STICKER REFUND - FIN	35.00
7689(A)	LOGSDON OFFICE SUPPLY	SUPPLIES - FIN	34.49
310376	AMANDA WRANN	REIMBURSEMENT - PD	28.45
310322	NORTHWEST POLICE ACADEMY	TRAINING - PD	25.00
7705(A)	CONSTELLIX	SUBSCRIPTION - IT	14.69
310402	KHALDOUN FAKHOURY	WATER/SEWER REFUND - FIN	8.71
310405	MARK JESSELSON	WATER/SEWER REFUND - FIN	5.12
		CLASS 'A' TOTAL	**889,945.64**

VILLAGE OF NORTHBROOK

GENERAL LEDGER SYSTEM
WARRANT LIST

INVOICES PROCESSED BETWEEN JULY 16, 2025 - JULY 31, 2025
FOR 8/12/25 MEETING

Sorted by Invoice Amount

CHECK NUMBER	VENDOR NAME	PURPOSE	AMOUNT
	CLASS 'B' WARRANTS		
7/31/25	PAYROLL	7/31/2025 PAYROLL	915,910.53
23(E)	HUNTINGTON NATIONAL BANK	VILLAGE CREDIT CARD JUNE - FIN	26,772.25
469(E)	QUADIENT FINANCE USA, INC.	POSTAGE - FIN	4,000.00
468(E)	LOWE'S	SUPPLIES - PW	1,685.52
310258	NORTHBROOK POSTMASTER	SUBSCRIPTION - FIN	1,080.00
310257	THOMSON REUTERS	SUBSCRIPTION - PD	332.67
1(E)	DELUXE	SUPPLIES - FIN	239.52
		CLASS 'B' TOTAL	**950,020.49**
		REPORT TOTAL	***1,839,966.13***

MEMORANDUM

To: Village Manager Cara Pavlicek
From: Director Public Works Kelly Hamill
Date: 2025-08-12
Subject: A Resolution Authorizing a Contract for Replacement of a Sanitary Sewer Lift Station Generator with Interstate Power Systems, Inc. of Carol Stream, Illinois

Overview

The backup generator at 135 Skokie Boulevard has been identified for replacement due to its age and condition. The unit is also no longer supported by the manufacturer, making replacement parts for the unit difficult to source.

Fiscal Impact

The adopted FY26 Budget includes sufficient funds in Account No. 14-4160-723-00 (Sewer Line Construction) for the purchase and installation of a new backup generator located at 135 Skokie Boulevard in the amount of $70,990. Staff recommends a 10% contingency be approved in the amount of $7,099 for any unforeseen field conditions for a total amount of $78,089.

Account Name	Account Number	Budget	Available	Requested	Remaining	Within Budget
Sewer Line Construction	14-4160-723-00	$398,000	$89,850	$78,089	$11,761	Yes

Recommendation

Approval.

Background

The Village of Northbrook owns and maintains approximately 132 miles of sanitary sewers with 13 lift stations. The sanitary sewer system primarily uses gravity as a means of transporting wastewater from individual properties to the Village's feeder lines and ultimately to the Metropolitan Water Reclamation District's (MWRD) trunk line system to its North Side Treatment Plant in Skokie. In places where sewer lines reach a depth that is lower than the

trunk lines, a lift station pumps the wastewater up to a higher elevation where gravity can be used again. In the event of a power outage, a natural gas back-up generator is used to ensure the continued operation of the lift station.

The Sanitary Lift Station at 135 Skokie Boulevard serves offices and retail centers on Skokie Boulevard. The generator is original to the construction of the lift station in 2000 and is in need of replacement due to the inability to secure replacement parts in order to perform needed repairs. The existing model of generator is no longer supported by the manufacturer.

To ensure a permanent source of backup power for the subdivision, staff worked with Interstate Power Systems to secure a quote for the replacement generator. Sourcewell (cooperative purchasing program) awarded a contract for generator engineering design and replacement (Contract #092222-RYC) to Interstate Power Systems, Inc. of Carol Stream, Illinois (the "Contractor"). The Village often works with purchasing cooperatives such as Sourcewell, an organization focused solely on competitive bidding for government purchasing. This contract meets both the Village's specifications for generator supplies and services and its competitive purchasing requirements.

A Resolution Authorizing a Contract for Replacement of a Sanitary Sewer Lift Station Generator with Interstate Power Systems, Inc. of Carol Stream, Illinois
Exhibit A- Generator Replacement 135 Skokie Blvd Contract V3

Resolution 2025 - _____

A Resolution Authorizing a Contract for Replacement of a Sanitary Sewer Lift Station Generator with Interstate Power Systems, Inc. of Carol Stream, Illinois

is hereby adopted, as follows:

Section 1. Recitals.

The Village of Northbrook's sanitary sewer system includes 13 lift stations that are designed to pump wastewater up and discharge at a higher elevation so that flow can be maintained by gravity until reaching a Metropolitan Water Reclamation District (MWRD) main trunk line. In the event of a power outage, a natural gas generator is used to ensure the lift station can continue operating and avoid sewer back-ups into structures.

The sanitary lift station generator located at 135 Skokie Boulevard has reached the end of its useful life and needs to be replaced ("***Project***"). The Village participates in a collective purchasing program that provides the Village with access to competitive pricing for generator engineering, procurement and installation services offered through Sourcewell (formerly National Joint Powers Alliance) contract #092222-RYC ("***Sourcewell***"). Village staff determined that Sourcewell's purchasing policies satisfy the Village's and State's competitive bidding requirements. Interstate Power Systems, Inc. of Carol Stream, Illinois ("***Contractor***") was selected as the low bidder for the Sourcewell contract and has submitted a quote in the amount of $70,990 for the Project.

Based on these factors, staff recommends entering into a contract, attached as ***Exhibit A***, with the Contractor for the Project in the amount of $70,990 ("***Contract***"). There are sufficient funds in the adopted Fiscal Year 25-26 Budget in the Sanitary Sewer Fund Account No. 14-4160-723-00 (Sewer Line Construction) for the Project. Staff recommends a 10% contingency be approved in the amount of $7,099 for any unforeseen field conditions for a total not to exceed amount of $78,089.

The Board of Trustees have considered the Contract and determined that approval of the Contract is in the best interest of the Village and the public.

Section 2. Approval of Contract.

The Contract with the Contractor is approved in a form acceptable to the Village Attorney and the Village Manager.

Section 3. Authorization to Execute Contract.

The Village Manager and Village Clerk are hereby authorized to execute and seal, on behalf of the Village, the Contract only after receipt by the Village Clerk of at least three original copies of the Contract executed by the Contractor and compliance by the Contractor with all conditions precedent to closing; provided, however, that if such executed copies of the Contracts are not received by the Village Clerk within 60 days after the date of adoption of this Resolution, then this authority to execute and seal shall, at the option of the President and Board of Trustees, be null and void.

Section 4. Authorization to Execute Change Orders.

The Village Manager and Village Clerk are authorized to execute change orders for the Project in the amount of up to $7,099, subject to the Village Manager making the necessary determination that the increase in work contemplated by the change order complies with Section 33E-9 of Article 33E of the Criminal Code of 1961 and placing a copy of such determinations in the Project file.

Adopted:

RESULT:
MOVER:
SECONDER:
AYES:
ABSTAIN:
ABSENT:

ATTEST:

Village President

Village Clerk

VILLAGE OF NORTHBROOK
CONTRACT FOR
Generator Replacement - Sanitary Lift Station located at 135 Skokie Boulevard

Full Name of Contractor: Interstate Power Systems, Inc.

Principal Office Address: 1340 Corporate Center Curve, Eagan, MN 55121-1233

Local Office Address: 210 Alexandra Way, Carol Stream, IL 60188

Contact Person: Robert Alfmi Phone: 1-708-642-5071 E-Mail: Robert.alfmi@istate.com

TO: Northbrook Public Works
655 Huehl Road
Northbrook, Illinois 60062
Attention: Joseph Rizzo, Superintendent

Work Proposal

A. Contract and Work: If this Contract is accepted, Contractor proposes, and agrees, that Contractor shall, at its sole cost and expense, provide, perform, and complete, in the manner specified and described, and upon the terms and conditions set forth, in this Contract and Owner's written notification of acceptance in the form included in this bound set of documents, all of the following, all of which is herein referred to as the "Work":

i. Labor, Equipment, Materials and Supplies: Provide, perform, and complete, in the manner specified and described in this Contract and the Specifications, all necessary work, labor, services, transportation, equipment, materials, supplies, information, data, and other means and items necessary for completing Generator removal and replacement service in the Village of Northbrook; "***Work Site***").

ii. Permits: Procure and furnish all permits, licenses, and other governmental approvals and authorizations necessary in connection therewith;

iii. Bonds and Insurance: Procure and furnish all bonds and all insurance certificates specified in this Contract;

iv. Taxes: Pay all applicable federal, state, and local taxes;

v. Miscellaneous: Do all other things required of Contractor by this Contract; and

vi. Quality: Provide, perform, and complete all of the foregoing in a proper and workmanlike manner, consistent with highest standards of professional and construction practices, in full compliance with, and as required by or pursuant, to this Contract, and with the greatest economy, efficiency, and expedition consistent therewith, with only new, undamaged, and first quality equipment, materials, and supplies.

B. Prevailing Wages: In accordance with the Prevailing Wage Act, 820 ILCS 130/0.01 et seq., not less than the prevailing rate of wages for similar work in the locality in which the Work is to be performed shall be paid to all laborers performing work under this contract. The Act requires contractors and subcontractors to pay laborers, workers and mechanics performing

services on public works projects no less than the current "prevailing rate of wages" (hourly cash wages plus amount for fringe benefits) in the county where the work is performed. The Illinois Department of Labor publishes the prevailing wage rates on its website at http://labor.illinois.gov/. The Department revises the prevailing wage rates and the Contractor/Subcontractor has an obligation to check the Department's website for revisions to prevailing wage rates. For information regarding current prevailing wage rates, Contractor shall refer to the Illinois Department of Labor's website. Contractor and any subcontractors rendering services under this contract must comply with all requirements of the Act, including but not limited to, all wage requirements and notice and record keeping duties.

C. Performance Standards: If this Contract is accepted, Contractor proposes, and agrees, that all Work shall be fully provided, performed, and completed in accordance with the Specifications attached hereto as Attachment A and by this reference made a part of this Contract.

D. Responsibility for Damage or Loss: If this Contract is accepted, Contractor proposes, and agrees, that Contractor shall be responsible and liable for, and shall promptly and without charge to Owner repair or replace, damage done to, and any loss or injury suffered by, Owner, the Work, the Work Site, or other property or persons as a result of the Work.

E. Inspection/Testing/Rejection: Owner shall have the right to inspect all or any part of the Work and to reject all or any part of the Work that is, in Owner's judgment, defective or damaged or that in any way fails to conform strictly to the requirements of this Contract and Owner, without limiting its other rights or remedies, may require correction or replacement at Contractor's cost, perform or have performed all Work necessary to complete or correct all or any part of the Work that is defective, damaged, or nonconforming and charge Contractor with any excess cost incurred thereby, or cancel all or any part of any order or this Contract. Work so rejected may be returned or held at Contractor's expense and risk.

2. Contract Price Proposal

If this Contract is accepted, Contractor proposes, and agrees, that Contractor shall take in full payment for all Work and other matters set forth under Section 1 above, including overhead and profit; taxes, contributions, and premiums; and compensation to all subcontractors and suppliers, the compensation set forth below.

A. Schedule of Prices: For providing, performing, and completing all Work, the sum of products resulting from multiplying the number of acceptable units by the Unit Prices set forth in Attachment C.

B. Basis for Determining Prices: It is expressly understood and agreed that:

i. All prices stated in the Schedule of Prices are firm and shall not be subject to escalation or change.

ii. Contractor has thoroughly examined this Contract and has thoroughly inspected the Work Site, prior to submission of its bid.

iii. Owner is not subject to state or local sales, use, and excise taxes, that no such taxes are included in the Schedule of Prices, and that all claim or right to claim any additional

compensation by reason of the payment of any such tax is hereby waived and released; and

iv. All other applicable federal, state, and local taxes of every kind and nature applicable to the Work are included in the Schedule of Prices; and

v. Owner reserves the right to increase or decrease quantities of Unit Price Items, that payment for each Unit Price Item shall be made only on the actual number of acceptable units of such Unit Price Item in full compliance with this Contract, and that all claim or right to dispute or complain of any such estimated quantity, or to assert that there was any misunderstanding in regard to the nature or amount of any Unit Price Item to be provided or performed, is hereby waived and released.

C. Time of Payment: It is expressly understood and agreed that all payments shall be made in accordance with the following schedule:

i. All payments may be subject to deduction or set off by reason of any failure of Contractor to perform under this Contract. Each payment shall include Contractor's certification of the value of, and partial or final waivers of lien covering, all Work for which payment is then requested and Contractor's certification that all prior payments have been properly applied to the payment or reimbursement of the costs with respect to which they were paid.

ii. Contractor shall submit to Owner, on a monthly basis, certified payroll records as defined in, and required by, Section 5 of the Prevailing Wage Act, as amended, 820 ILCS 130/5.

iii. All payments shall be made in accordance with the following schedule: Payment to be made within 30 days of submission of acceptable written and/or digital reports as outlined in Attachment A and receipt of an approved invoice in accordance with the Local Government Prompt Payment Act. Owner shall let the Contractor know if reports are acceptable within seven working days of submission. All payments may be subject to deduction or set off by reason of any failure of Contractor to perform under this Contract. Each payment shall include Contractor's certification of the value of, and partial or final waivers of lien covering, all Work for which payment is then requested and Contractor's certification that all prior payments have been properly applied to the payment or reimbursement of the costs with respect to which they were paid. **No trailing waivers shall be permitted.**

3. **Contract Time Proposal**

A. Term: If this Contract is accepted, Contractor proposes, and agrees, that Contractor shall commence the Work within 10 days following Owner's acceptance of this Contract provided Contractor shall have furnished to Owner all applicable bonds and/or Letters of Credit and all insurance certificates specified in this Contract (the "***Commencement Date***"). If this Contract is accepted, Contractor proposes, and agrees, that Contractor shall perform the Work diligently and continuously in accordance with the schedule approved pursuant to the Specifications. The term of this Contract shall terminate on ***Completion Date***.

4. **Financial Assurance**

A. Bonds: If this Contract is accepted, and for each year in which the Contract is renewed, Bidder proposes, and agrees, that Bidder shall provide a Performance Bond and a Labor and Material Payment Bond, on forms substantially conforming to those attached hereto as Appendices 2 and 3, from a surety company acceptable to Owner, each in the sum of the Total Contract Price for the then-current term, within 10 days following Owner's acceptance of this Contract or the execution of any renewal of this Contract. Bidder may, at Owner's sole discretion, in lieu of Bonds, provide a Letter of Credit, on forms approved by Owner from a financial institution acceptable to Owner, in the sum of the Total Contract Price for the then-current term, within 10 days following Owner's acceptance of this Contract or the execution of any renewal of this Contract.

B. Insurance: If this Contract is accepted and for each year in which this Contract is renewed, Contractor proposes, and agrees, that Contractor shall provide certificates of insurance evidencing the minimum insurance coverages and limits set forth below within 10 days following Owner's acceptance, or the execution of any renewal, of this Contract. Such policies shall be in a form, and from companies, acceptable to Owner and from companies with a general rating of A minus, a financial size category of Class X or better according to Best's Insurance Guide. The insurance coverages and limits set forth below shall be deemed to be minimum coverages and limits and shall not be construed in any way as a limitation on Contractor's duty to carry adequate insurance or on Contractor's liability for losses or damages under this Contract. The minimum insurance coverages and limits that shall be maintained at all times while providing, performing, or completing the Work are as follows:

i. Workers' Compensation and Employer's Liability

Limits shall not be less than:

a. Worker's Compensation: Statutory;

b. Employer's Liability: $500,000 ea. Accident injury
$500,000 ea. Employee disease
$500,000 disease-policy

Such insurance shall evidence that coverage applies to the State of Illinois.

ii. Comprehensive Motor Vehicle Liability with a combined single limit of liability for bodily injury and property damage of not less than $2,000,000 for vehicles owned, non-owned, or rented.

iii. Comprehensive General Liability

Limits shall not be less than:

$2,000,000 Bodily Injury and Property Damage Combined Single Limit.

Coverage is to be written on an "occurrence" basis.

Coverage to include:

- Premises Operations
- Products/Completed Operations
- Independent Contractors
- Personal Injury (with Employment Exclusion deleted)
- Broad Form Property Damage

Endorsement

- "X," "C," and "U"
- Contractual Liability

Contractual Liability coverage shall specifically include the indemnification set forth below.

iv. Umbrella Liability

Limits shall not be less than:

$2,000,000 Bodily Injury and Property Damage Combined Single Limit.

This Policy shall apply in excess of the limits stated in 1, 2, and 3 above.

v. Owner as Additional Insured. Owner shall be named as an Additional Insured and a cancellation notice recipient on all policies except for Worker's Compensation, and Employer's Liability.

Each such additional Insured endorsement shall identify Owner as follows: Village of Northbrook, including its Board Members and elected and appointed officials, its officers, employees, agents, attorneys, consultants, and representatives. Additional insured coverage shall be provided on endorsements at least as broad as ISO form CG2010 or CG2026 (pre 2004 editions).

vi. Other Parties as Additional Insureds. In addition to the Owner, the following parties shall be named as additional insureds on the following policies.

C. Indemnification: If this Contract is accepted, Contractor proposes, and agrees, that Contractor shall indemnify, save harmless, and defend Owner against all third party claims, damages, liability, losses, and expenses (including attorneys' fees) that may arise, or be alleged to have arisen, to the extent caused by the negligence or willful misconduct of Contractor, or any failure to meet the representations and warranties set forth in Section 6 of this Contract.

D. Penalties: If this Contract is accepted, Contractor proposes, and agrees, that Contractor shall be solely liable for any fines or civil penalties that are imposed by any governmental or quasi-governmental agency or body that may arise, or be alleged to have arisen, out of or in connection with Contractor's performance of, or failure to perform, the Work or any part thereof.

5. **Firm Proposal**

All prices and other terms stated in this Contract are firm and shall not be subject to withdrawal, escalation, or change provided Owner accept this Contract within 45 days after the date this sealed Contract is opened.

6. **Personnel; Subcontractors.**

A. Key Project Personnel. Contractor shall provide the names and credentials/experience of its personnel who will be primarily responsible for carrying out the Work on behalf of Contractor ("***Key Project Personnel***") in ***Attachment B***. The Key Project Personnel shall not be changed without the Owner's prior written approval.

B. Availability of Personnel. Contractor shall provide all personnel necessary to complete the Work including, without limitation, any Key Project Personnel identified in this Contract. Contractor shall notify the Owner as soon as practicable prior to terminating the employment of, reassigning, or receiving notice of the resignation of, any Key Project Personnel. Contractor shall have no claim for damages and shall not bill the Owner for additional time and materials charges as the result of any portion of the Work which must be duplicated or redone due to such termination or for any delay in the performance of the Work as a result of any such termination, reassigning, or resignation.

C. Approval and Use of Subcontractors. Contractor shall perform the Work with its own personnel and under the management, supervision, and control of its own organization unless otherwise approved by the Owner in writing. All subcontractors and subcontracts used by Contractor shall be acceptable to, and approved in advance by, the Owner. The Owner's approval of any subcontractor or subcontract shall not relieve Contractor of full responsibility and liability for the provision, performance, and completion of the Work as required by the Contract. All Work performed under any subcontract shall be subject to all of the provisions of this Contract in the same manner as if performed by employees of Contractor. For purposes of this Contract, the term "Contractor" shall be deemed also to refer to all subcontractors of Contractor, and every subcontract shall include a provision binding the subcontractor to all provisions of this Contract.

D. Removal of Personnel and Subcontractors. If any personnel or subcontractor fails to perform the Work in a manner satisfactory to the Owner, Contractor shall immediately upon notice from the Owner remove and replace such personnel or subcontractor. Contractor shall have no claim for damages, for compensation in excess of the amount contained in this Contract or for a delay or extension of the term of this Contract as a result of any such removal or replacement.

7. Contractor's Representations and Warranties

In order to induce Owner to accept this Contract, Contractor hereby represents and warrants as follows:

A. The Work: The Work, and all of its components, shall be new, free from any latent or patent defects and flaws in workmanship, materials; shall strictly conform to the requirements of this Contract, including, without limitation, and the performance standards set forth in Subsection 1B of this Contract. All parts and equipment supplied in this Contract will be subject to the

manufacturer's express warranty. THERE ARE NO OTHER EXPRESS OR IMPLIED WARRANTIES, INCLUDING, WITHOUT LIMITATION, NO WARRANTIES OF MERCHANTABILITY OR FITNESS FOR A PARTICULAR PURPOSE.

B. Conflict of Interest. To the best of Contractor's knowledge, (1) no employee or agent of the Owner is interested in the business of Contractor or this Contract; (2) as of the date of this Contract neither Contractor nor any person employed or associated with Contractor has any interest that would conflict in any manner or degree with the performance of the obligations under this Contract; and (3) neither Contractor nor any person employed by or associated with Contractor shall at any time during the term of this Contract obtain or acquire any interest that would conflict in any manner or degree with the performance of the obligations under this Contract.

C. No Collusion. Contractor is not barred from contracting with a unit of state or local government as a result of (i) a delinquency in the payment of any tax administered by the Illinois Department of Revenue unless Contractor is contesting, in accordance with the procedures established by the appropriate revenue act, its liability for the tax or the amount of the tax, as set forth in Section 11-42.1-1 et seq. of the Illinois Municipal Code, 65 ILCS 5/11-42.1-1 *et seq*.; or (ii) a violation of either Section 33E-3 or Section 33E-4 of Article 33E of the Criminal Code of 1961, 720 ILCS 5/33E-1 *et seq*. Contractor represents that the only persons, firms, or corporations interested in this Contract as principals are those disclosed to the Owner prior to the execution of this Contract, and that this Contract is made without collusion with any other person, firm, or corporation. If at any time it shall be found that Contractor has, in procuring this Contract, colluded with any other person, firm, or corporation, then Contractor shall be liable to the Owner for all loss or damage that the Owner may suffer, and this Contract shall, at the Owner's option, be null and void.

D. Sexual Harassment Policy. Contractor has a written sexual harassment policy in full compliance with Section 2-105(A)(4) of the Illinois Human Rights Act, 775 ILCS 5/2-105(A)(4).

E. Patriot Act Compliance. Neither Contractor nor any of its principals, shareholders, members, partners, or affiliates, as applicable, is a person or entity named as a Specially Designated National and Blocked Person (as defined in Presidential Executive Order 13224) and that it is not acting, directly or indirectly, for or on behalf of a Specially Designated National and Blocked Person. Contractor and its principals, shareholders, members, partners, or affiliates, as applicable, are not, directly or indirectly, engaged in, and are not facilitating, the transactions contemplated by this Contract on behalf of any person or entity named as a Specially Designated National and Blocked Person. Contractor hereby agrees to defend, indemnify and hold harmless the Owner, its corporate authorities, and all Owner elected or appointed officials, officers, employees, agents, representatives, engineers, and attorneys, from and against any and all claims, damages, losses, risks, liabilities, and expenses (including reasonable attorneys' fees and costs) arising from or related to any breach of the representations and warranties in this subsection.

F. Compliance with Laws and Grants. Contractor shall give all notices, pay all fees, and take all other action that may be necessary to ensure that the Work are provided, performed, and completed in accordance with all required governmental permits, licenses, or other approvals and authorizations that may be required in connection with providing, performing, and completing the Work, and with all applicable statutes, ordinances, rules, and regulations,

including without limitation the Fair Labor Standards Act; any statutes regarding qualification to do business; any statutes prohibiting discrimination because of, or requiring affirmative action based on, race, creed, color, national origin, age, sex, or other prohibited classification, including, without limitation, the Americans with Disabilities Act of 1990, 42 U.S.C. §§ 12101 *et seq*., and the Illinois Human Rights Act, 775 ILCS 5/1-101 *et seq*. Contractor shall also comply with all conditions of any federal, state, or local grant received by Owner or Contractor with respect to this Contract or the Work.

Contractor shall be solely liable for any fines or civil penalties that are imposed by any governmental or quasi-governmental agency or body that may arise, or be alleged to have arisen, out of or in connection with Contractor's, or its subcontractors', performance of, or failure to perform, the Work or any part thereof.

Every provision of law required by law to be inserted into this Contract shall be deemed to be inserted herein.

G. Qualified: Contractor has the requisite experience, ability, capital, facilities, plant, organization, and staff to enable Contractor to perform the Work successfully and promptly and to commence and complete the Work within the Contract Price and Contract Time Proposals set forth above.

8. **Ownership**

Designs, drawings, plans, specifications, photos, reports, information, observations, calculations, notes, and any other documents, data, or information, in any form, prepared, collected, or received by the Contractor in connection with any or all of the Work to be performed under this Contract ("***Documents***") shall be and remain the exclusive property of the Owner. At the Owner's request, or upon termination of this Contract, the Contractor shall cause the Documents to be promptly delivered to the Owner.

9. **Acknowledgments**

In submitting this Contract, Contractor acknowledges and agrees that:

A. Reliance. Owner are relying on all warranties, representations, and statements made by Contractor in this Contract.

B. Reservation of Rights. Owner reserve the right to reject any and all proposals, reserve the right to reject the low price proposal, and reserve such other rights as are set forth in the Instructions to Contractors.

C. Acceptance. If this Contract is accepted, Contractor shall be bound by each and every term, condition, or provision contained in this Contract and in Owner's written notification of acceptance in the form included in this bound set of documents.

D. Remedies. Each of the rights and remedies reserved to Owner in this Contract shall be cumulative and additional to any other or further remedies provided in law or equity or in this Contract.

E. Limitations. EXCEPT FOR THIRD PARTY CLAIMS THAT ARE THE SUBJECT OF INDEMNIFICATION AND DAMAGES TO THE EXTENT CAUSED BY CONTRACTOR'S GROSS NEGLIGENCE OR WILLFUL MISCONDUCT, IN NO EVENT SHALL THE TOTAL AND CUMULATIVE LIABILITY OF CONTRACTOR UNDER THIS AGREEMENT FOR ANY CLAIM OR CLAIMS HEREUNDER BETWEEN THE PARTIES EXCEED $3,000,000. TO THE MAXIMUM EXTENT PERMITTED BY LAW, NEITHER PARTY SHALL BE LIABLE HEREUNDER FOR CONSEQUENTIAL, INCIDENTAL OR SPECIAL DAMAGES, INCLUDING WITHOUT LIMITATION ANY LOST OPPORTUNITY DAMAGES OR LOST PROFITS, OR SAVINGS, LOSS OF USE, LOSS OF DATA, OR DOWNTIME, EVEN IF IT HAS BEEN ADVISED OF THEIR POSSIBLE EXISTENCE.

F. Time. Time is of the essence of this Contract and, except where stated otherwise, references in this Contract to days shall be construed to refer to calendar days.

G. No Waiver. No examination, inspection, investigation, test, measurement, review, determination, decision, certificate, or approval by Owner, whether before or after Owner's acceptance of this Contract; nor any information or data supplied by Owner, whether before or after Owner's acceptance of this Contract; nor any order by Owner for the payment of money; nor any payment for, or use, possession, or acceptance of, the whole or any part of the Work by Owner; nor any extension of time granted by Owner; nor any delay by Owner in exercising any right under this Contract; nor any other act or omission of Owner shall constitute or be deemed to be an acceptance of any defective, damaged, or nonconforming Work, nor operate to waive or otherwise diminish the effect of any representation or warranty made by Contractor; or of any requirement or provision of this Contract; or of any remedy, power, or right of Owner.

H Severability. The provisions of this Contract/ Proposal shall be interpreted when possible to sustain their legality and enforceability as a whole. In the event any provision of this Contract shall be held invalid, illegal, or unenforceable by a court of competent jurisdiction, in whole or in part, neither the validity of the remaining part of such provision, nor the validity of any other provisions of this Contract shall be in any way affected thereby.

I. Amendments. No modification, addition, deletion, revision, alteration, or other change to this Contract shall be effective unless and until such change is reduced to writing and executed and delivered by Owner and Contractor.

J. Assignment. Neither this Contract, nor any interest herein, shall be assigned or subcontracted, in whole or in part, by Contractor except upon the prior written consent of Owner.

K. Governing Law. This Contract, and the rights of the parties under this Contract shall be interpreted according to the internal laws, but not the conflict of law rules, of the State of Illinois.

L. Notice concerning COVID-19. Notice is hereby given that as a result of the outbreaks of the disease COVID-19 arising from the novel coronavirus, temporary delays in delivery, labor or services from Contractor and its sub-suppliers or subcontractors may occur. Among other factors, Contractor's delivery is subject to correct and punctual supply from our sub-suppliers or subcontractors, and Contractor reserves the right to make partial deliveries or modify its labor or service. While Contractor shall make every commercially reasonable effort to meet the delivery, service or completion described herein, such date(s) is subject to change.

VILLAGE OF NORTHBROOK
CONTRACT FOR
Generator Replacement - Sanitary Lift Station located at 135 Skokie Boulevard

DATED this day of June 24, 2025.

Contractor's Status: (X) _____Corporation ; ( ) _____ Partnership; ( ) Individual Proprietor
(State) (State)

Contractor's Name: _ Interstate Power Systems, Inc.

Doing Business As (if different): Interstate Energy System

Signature of Contractor or Authorized Agent: _____

(corporate seal if corporation)

Printed Name: _____
Title/Position: _____

Principal Office Address: 1340 Corporate Center Curve, Eagan, MN 55121-1233

Contact Person: Robert Alfami _____ Phone: 1-708-642-5071

Contractor's Business Address: 210Alexandra Way, Carol Stream, IL 60188

Contractor's Business Telephone: _____ E-Mail: _____

If a Corporation or Partnership, list all Officers or Partners:

NAME	TITLE	ADDRESS
Travis C. Penrod	C.E.O. / Chairman	1340 Corporate Center Curve Eagan, MN 55121-1233
Frank Anglin	Chief Financial Officer	1340 Corporate Center Curve Eagan, MN 55121-1233
Kirk Lewis	Chief Operating Officer	1340 Corporate Center Curve Eagan, MN 55121-1233

If it is the Vendor's intention to utilize a subcontractor(s) to fulfill the requirements of this contract, the Village must be advised of the subcontractor's company name, address, telephone and fax numbers, and a contact person's name at the time of bid submittal.

Will you be utilizing a subcontractor? ☒ YES ☐ NO

Powerlink Electric
Ken Bein 708 768 7104
400 Corporate Woods Pkwy
Vernon Hills, Il

If yes, have you included all required information with your bid submittal? ☒ YES ☐ NO

VILLAGE OF NORTHBROOK
CONTRACT FOR
Generator Replacement - Sanitary Lift Station located at 135 Skokie Boulevard

ACCEPTANCE

The Contract attached hereto and by this reference incorporated herein and made a part hereof is hereby accepted by the order of Village of Northbrook ("***Owner***") this _____ day of _____, 2025.

This Acceptance, together with the Contract attached hereto, constitutes the entire and only agreement between the parties relating to the accomplishment of the Work and the compensation therefor and supersedes and merges any other prior or contemporaneous discussions, agreements, or understandings, whether written or oral, and shall prevail over any contradictory or inconsistent terms or conditions contained in any purchase order, acceptance, acknowledgment, invoice, or other standard form used by the parties in the performance of the Contract. Any such contradictory or inconsistent terms or conditions shall be deemed objected to by Owner without further notice of objection and shall be of no effect nor in any circumstances binding upon Owner unless accepted by Owner in a written document plainly labeled "Amendment to Contract." Acceptance or rejection by Owner of any such contradictory or inconsistent terms or conditions shall not constitute acceptance of any other contradictory or inconsistent terms or conditions.

(SEAL)

Attest/Witness:

By: _____
Derek Gau
Title: Village Clerk

VILLAGE OF NORTHBROOK

By: _____
Cara L. Pavlicek
Title: Village Manager

VILLAGE OF NORTHBROOK
CONTRACT FOR
Generator Replacement - Sanitary Lift Station located at 135 Skokie Boulevard
ATTACHMENT A – SCOPE OF WORK

1. **SCOPE OF WORK**

Village of Northbrook –Generator Replacement 135 Skokie Boulevard

Decommission 40kW Generator & Install New 50kW Generator at 135 Skokie Boulevard Sanitary Lift Station

- Disconnect and remove electrical connection from existing generator
- Disconnect and remove all controls from existing generator.
- Disconnect and remove gas connection from existing generator.
- Provide a crane for removal of old generator and offloading of new generator at 135 Skokie Blvd Lift station.
- Village of Northbrook to haul off old generator from 135 Skokie Blvd back to Public Works facility, 655 Huehl Rd.
- Provide excavation, framing and concrete for additional concrete pad to support new generator. (If required)
- Provide (1) appropriately sized automatic transfer switch (ATS) with Stainless Steel cabinet. (If Required)
- Provide Stainless Steel fused means of disconnect (If Required).
- Install (1) MTU Model GS50 natural gas generator.
- Make final electrical connections from feeder to generator.
- Make final connections to generator for all controls this includes but not limited to the block heater and battery charger.
- Make final connections to natural gas with new regulator and associated gas piping.
- Provide connection to Village supplied temporary generator, during construction. (If required)
- Provide test and check after all work has been completed.
- Provide customer training for new generator after testing has been completed.
- Start-up & 2 HR Load bank test of 50kW Generator at 135 Skokie Boulevard Lift Station.

The contractor will be responsible for obtaining a generator permit and scheduling of all necessary inspections. Information on the generator permit can be found on the Village's website at: https://www.northbrook.il.us/548/Generator. Final payment on the project will not be made until all inspections are passed. There will be no cost associated with the permit.

Contractor is responsible to make sure the generator supplied to the Village and all associated equipment be appropriately sized and will function properly per manufacture specification and as required to properly operate at the 135 Skokie Blvd. Sanitary Lift Station upon completion and final inspection. This includes but is not limited to ensuring that the generator is properly sized to operate the station, and the site has sufficient fuel supply to fuel the generator.

All work is to be completed during normal hours, Monday through Friday 7:30 am – 3:00 pm unless otherwise agreed upon with the village representative.

ATTACHMENT A – SCOPE OF WORK

2. **START-UP**

Start-up services upon the installation of the above equipment by the electrical and mechanical contractors. Start-up services include the use of a trained generator set service technician for testing of the equipment supplied and general operating instructions to the owner. These services will be performed during normal business hours, Monday through Friday 7:30 am to 3:00 pm. Recommend 1-week notice to schedule start-up. Contractor needs to ensure that all engine and electrical systems are installed and connected to enable the system to be tested during the initial start-up. Additional trips for start-up and training will be incidental to this contract.

3. **Warranty**

A. Workmanship and Generator Manufacturer Warranties: Contactor will provide 1 year warranty on workmanship and materials for the installation of the equipment. Generator will have a 2 year manufactures warranty and will commence once the generator has been run through start-up, testing, and placed "in service" and warranty start date has been agreed upon with the village.

B. Transfer Switch Warranty: New transfer switch if required will have standard 2-year warranty

C. Additional Contractor Warranties: the Contractor warrants that it has thoroughly inspected the Work Site and reviewed all necessary Village-owned equipment, documents and other records necessary for the completion for the Work included within this Contract. Contractor further certifies that the Work to be completed shall result in the successful installation of a new generator and assosiated Equipment at 135 Skokie Bolavard Lift Station and that the new Equipment shall operate properly and meet all manufacturer specifications for installation and operation once the Work has been completed. The Contractor agrees to hold harmless the Village from any claims or loses resulting from Contractor failure to adequately review existing conditions or manufacturer specifications for the Village-Owned Equipment as well as any mathematical, design or any other such errors made by the Contractor in the course of reviewing and developing the proposal for the Work.

4. Completion Date: All work is to be completed by August 31, 2025

VILLAGE OF NORTHBROOK
CONTRACT FOR
Generator Replacement - Sanitary Lift Station located at 135 Skokie Boulevard
ATTACHMENT B - KEY PROJECT PERSONNEL

Contact Person for Proposal/Contract: Robert Alfini
Office: 708-642-5071
Fax:

Primary Contact Person: Robert Alfini

Phone: 708-642-5071
E-Mail: Robert.Alfini@istate.com

Daily Field Operations Contact: Ken Bein with PowerLink Electric

Phone: 708-768-7104
E-Mail:

VILLAGE OF NORTHBROOK
CONTRACT FOR
Generator Replacement - Sanitary Lift Station located at 135 Skokie Boulevard
ATTACHMENT C – SCHEDULE OF PRICES

Generator Replacement Pricing Table

135 Skokie Boulevard Generator Replacement: Decommission 40kW Generator & Install NEW 50kW Generator	**$68,090.00**
Service: Start-up & 2 HR Load bank test of 50kW Generator at 135 Skokie Boulevard Sanitary Lift Station location after Install	**$2,900.00**

Project Total	**$70,990.00**

Note: As outlined in Contract Section 2(B)(v), Owner reserves the right to increase or decrease quantities of Unit Price Items, that payment for each Unit Price Item shall be made only on the actual number of acceptable units of such Unit Price Item in full compliance with this Contract, and that all claim or right to dispute or complain of any such estimated quantity, or to assert that there was any misunderstanding in regard to the nature or amount of any Unit Price Item to be provided or performed, is hereby waived and released. Owner reserves the right to scale the quantities for Unit Price Items to match available funding in any given Fiscal Year as approved by the Owner's Village Board, and, in the event that no funding is appropriated, terminate this agreement.

VILLAGE OF NORTHBROOK
CONTRACT FOR
Generator Replacement - Sanitary Lift Station located at 135 Skokie Boulevard
PERFORMANCE BOND
REFERENCES

Please provide three references with whom your company currently has a contract for services similar to those outlined in this request for proposals. Municipal references preferred.

Client: _____

Contact Name: _____

Contact Phone: _____ Contact E-mail: _____

Client: _____

Contact Name: _____

Contact Phone: _____ Contact E-mail: _____

Client: _____

Contact Name: _____

Contact Phone: _____ Contact E-mail: _____

VILLAGE OF NORTHBROOK
CONTRACT FOR
Generator Replacement - Sanitary Lift Station located at 135 Skokie Boulevard
PERFORMANCE BOND

KNOW ALL MEN BY THESE PRESENTS: *[Contractor]* as Principal, hereinafter called Contractor, and_____, as surety, a corporation organized and existing under the laws of the State of _____, hereinafter called Surety, are held and firmly bound unto Village of Northbrook, c/o Village Hall, 1225 Cedar Lane Northbrook, Illinois, 60062 as Obligee, hereinafter called Owner, in the full and just sum of Dollars ($_____), for the payment of which sum of money well and truly to be made, Contractor and Surety bind themselves, their heirs, executors, administrators, successors and assigns, jointly and severally, firmly by these presents, said amount to include payment of actual costs and damages and for attorneys' fees, architectural fees, design fees, engineering fees, accounting fees, testing fees, consulting fees, administrative costs, court costs, interest and any other fees and expenses resulting from or incurred by reason of Contractor's failure to promptly and faithfully perform its contract with Owner, said contract being more fully described below, and to include attorneys' fees, court costs and administrative and other expenses necessarily paid or incurred in successfully enforcing performance of the obligation of Surety under this bond.

WHEREAS, Contractor has entered into a written agreement dated ***[Commencement Date]*** (_____) with Owner entitled "CONTRACT for 135 Skokie Boulevard Sanitary Lift Station- Generator Replacement" (the "Contract"), the terms and conditions of which are by this reference incorporated herein as though fully set forth herein.

NOW, THEREFORE, THE CONDITION OF THIS OBLIGATION IS SUCH THAT if Contractor shall well, truly and promptly perform all the undertakings, covenants, terms, conditions and agreements of said Contractor under the Contract, including, but not limited to, Contractor's obligations under the Contract: (1) to provide, perform and complete at the Work Site and in the manner specified in the Contract all necessary work, labor, services, transportation, equipment, materials, apparatus, machinery, tools, fuels, gas, electric, water, waste disposal, information, data and other means and items necessary for the roadway reconstruction including removal of existing concrete pavement, earth excavation and replacement with asphalt pavement and installation of concrete curb and gutter in the Village of Northbrook, Illinois; (2) to procure and furnish all permits, licenses and other governmental approvals and authorizations necessary in connection therewith except as otherwise expressly provided in the Attachment A of the Contract; (3) to procure and furnish all bonds, and all certificates and policies of insurance specified in the Contract; (4) to pay all applicable federal, state and local taxes; (5) to do all other things required of Contractor by the Contract; and (6) to provide, perform and complete all of the foregoing in a proper and workmanlike manner and in full compliance with, and as required by and pursuant to, the Contract; all of which is herein referred to as the "Work," whether or not any of said Work enter into and become component parts of the improvement contemplated, then this obligation shall be null and void; otherwise it shall remain in full force and effect.

Surety, for value received, hereby stipulates and agrees that no changes, modifications, alterations, omissions, deletions, additions, extensions of time or forbearances on the part of either Owner or Contractor to the other in or to the terms of said Contract; in or to the schedules, plans, drawings or specifications; in or to the method or manner of performance of the Work; in or to Owner-furnished facilities, equipment, material, service or sites; or in or to the mode or manner of payment therefor shall in any way release Contractor and Surety or either or any of them, or any of their heirs, executors, administrators, successors or assigns, or affect the obligations of Surety on this bond, all notice of any and all of the foregoing changes, modifications, alterations, omissions, deletions, additions, extensions of time

or forbearances and notice of any and all defaults by Contractor or of Owner's termination of Contractor being hereby waived by Surety.

Notwithstanding anything to the contrary in the foregoing paragraph, in no event shall the obligations of Surety under this bond in the event of Contractor's default be greater than the obligations of Contractor under the Contract in the absence of such Contractor default.

In the event of a default or defaults by Contractor, Owner shall have the right to take over and complete the Contract upon 30 calendar days' written notice to Surety, in which event Surety shall pay Owner all costs incurred by Owner in taking over and completing the Contract

At its option, Owner may instead request that Surety take over and complete the Contract, in which event Surety shall take reasonable steps to proceed promptly with completion no later than 30 calendar days from the date on which Owner notifies Surety that Owner wants Surety to take over and complete the Contract.

Owner shall have no obligation to incur any expense or correct any deficient performance of Contractor in order to be entitled to receive the proceeds of this bond.

No right of action shall accrue on this bond to or for the use of any person or corporation other than Owner or the heirs, executors, administrators or successors of Owner.

Signed and sealed this _____ day of _____, 2025.

Attest/Witness:	PRINCIPAL: **CONTRACTOR NAME**
By: _____	By: _____
Title: _____	Title: _____
Attest/Witness:	SURETY: _____
By: _____	By: _____
Title: _____	Title: _____

VILLAGE OF NORTHBROOK
Generator Replacement - Sanitary Lift Station located at 135 Skokie Boulevard
BETWEEN VILLAGE OF NORTHBROOK AND (_____).
LABOR AND MATERIAL PAYMENT BOND

KNOW ALL MEN BY THESE PRESENTS: [*Contractor]* as Principal, hereinafter called Contractor, and_____
_____,
as surety, a corporation organized and existing under the laws of the State of _____, hereinafter called Surety, are held and firmly bound unto Village of Northbrook, c/o Village Hall, 1225 Cedar Lane, Northbrook, Illinois, as Obligee, hereinafter called Owner, for the use and benefit of itself and of claimants as hereinafter defined, in the full and just sum of ($_____), to be paid to it or the said claimants or its or their assigns, to which payment well and truly to be made Contractor and Surety bind themselves, their heirs, executors, administrators, successors and assigns, jointly and severally, firmly by these presents, said amount to include attorney's fees, court costs and administrative and other expenses necessarily paid or incurred in successfully enforcing performance of the obligation of Surety under this bond.

WHEREAS, Contractor has entered into a written agreement dated ***[Commencement Date]*** (_____) with Owner entitled "CONTRACT for 135 Skokie Boulevard Sanitary Lift Station- Generator Replacement" (the "Contract"), the terms and conditions of which are by this reference incorporated herein as though fully set forth herein.

NOW, THEREFORE, THE CONDITION OF THIS OBLIGATION IS SUCH THAT if Contractor shall promptly pay or cause to be paid all sums of money that may be due to any claimant with respect to Contractor's obligations under the Contract: (1) to provide, perform and complete at the Work Site and in the manner specified in the Contract all necessary work, labor, services, transportation, equipment, materials, apparatus, machinery, tools, fuels, gas, electric, water, waste disposal, information, data and other means and items necessary for the roadway reconstruction including removal of existing concrete pavement, earth excavation and replacement with asphalt pavement and installation of concrete curb and gutter in the Village of Northbrook, Illinois; (2) to procure and furnish all permits, licenses and other governmental approvals and authorizations necessary in connection therewith except as otherwise expressly provided in Attachment A to the Contract; (3) to procure and furnish all bonds and all certificates and policies of insurance specified in the Contract; (4) to pay all applicable federal, state and local taxes; (5) to do all other things required of the Contractor by the Contract; and (6) to provide, perform and complete all of the foregoing in a proper and workmanlike manner and in full compliance with, and as required by or pursuant to, the Contract; all of which is herein referred to as the "Work," whether or not any of said Work enter into and become component parts of the improvement contemplated, then this obligation shall be null and void; otherwise it shall remain in full force and effect.

For purpose of this bond, a claimant is defined as one having a direct contract with Contractor or with a subcontractor of Contractor to provide, perform or complete any part of the Work.

Contractor and Surety hereby jointly and severally agree that every claimant who has not had all just claims for the furnishing of any part of the Work paid in full, including, without limitation, all claims for amounts due for materials, lubricants, oil, gasoline, rentals of or service or repairs on machinery, equipment, and tools consumed or used in connection with the furnishing of any part of the Work, may sue on this bond for the use of such claimant, may prosecute the suit to final judgment for such sum or sums as may be justly due such claimant, and may have execution therein; provided, however, that Owner shall not be liable for the payment of any costs or expenses of any such suit. The provisions of 30 ILCS 550/1 and 2 shall be deemed inserted herein, including the time limits within which notices of claim must be filed and actions brought under this bond.

VILLAGE OF NORTHBROOK
Generator Replacement - Sanitary Lift Station located at 135 Skokie Boulevard
BETWEEN VILLAGE OF NORTHBROOK AND (_____).
LABOR AND MATERIAL PAYMENT BOND

Contractor and Surety hereby jointly agree that Owner may sue on this bond if Owner is held liable to, or voluntarily agrees to pay, any claimant directly, but nothing in this bond shall create any duty on the part of Owner to pay any claimant.

Surety, for value received, hereby stipulates and agrees that no changes, modifications, alterations, omissions, deletions, additions, extensions of time or forbearances on the part of Owner or Contractor to the other in or to the terms of said Contract; in or to the schedules, plans, drawings or specifications; in or to the method or

manner of performance of the Work; in or to Owner-furnished facilities, equipment, material, service or site; or in or to the mode or manner of payment therefor shall in any way release Contractor and Surety or either or any of them, or any of their heirs, executors, administrators, successors or assigns, or affect the obligations of said Surety on this bond, all notice of any and all of the foregoing changes, modifications, alterations, omissions, deletions, additions, extensions of time or forbearances and notice of any and all defaults by Contractor or of Owner's termination of Contractor being hereby waived by Surety.

Signed and sealed this _____ day of _____, 2025.

Attest/Witness:	PRINCIPAL:
By: _____	By: _____
Title: _____	Title:_____
Attest/Witness:	SURETY:_____
	_____
By: _____	By: _____
Title: _____	Title:_____

VILLAGE OF NORTHBROOK
CONTRACT FOR
Generator Replacement - Sanitary Lift Station located at 135 Skokie Boulevard
ATTACHMENT D - REFERENCES

WAIVER OF LIEN TO DATE

STATE OF _____)
)
COUNTY OF _____)

TO WHOM IT MAY CONCERN:

WHEREAS, the undersigned has been employed by _____ _____ to furnish _____ _____ for the premises known as _____ _____ _____ of which the Village of Northbrook is the Owner.

The undersigned, for and in consideration of _____ _____ ($_____) Dollars, and other good and valuable consideration, the receipt whereof is hereby acknowledged, do(es) hereby waive and release any and all lien or claim of, or right to, lien, under the statutes of the State of Illinois relating to mechanic's liens, with respect to and on said above-described premises, and the improvements thereon, and on the materials, supplies, equipment, fixtures, apparatus, machinery, or other items furnished, and on the moneys, funds, or other considerations due or to become due from the Owner, on account of labor, services, materials, supplies, equipment, fixtures, apparatus, machinery, or other items furnished to this date by the undersigned for the above-described premises. The undersigned further represent(s) and warrant(s) that the statements contained in Exhibit A, attached hereto and by this reference incorporated herein and made a part hereof, are true and correct, and that the undersigned is authorized to make this Waiver of Lien to Date.

Given under hand and seal this_____ day of _____, 20__.

Signature and Seal: _____

_____

NOTE: All waivers must be for the full amount paid. If waiver is for a corporation, corporate name should be used, corporate seal affixed and title of officer signing waiver should be set forth; if waiver is for a partnership, the partnership name should be used, partner should sign and designate himself as partner; if waiver is for a limited liability company, the company name should be used and managing member should sign and designate himself as managing member.

AFFIDAVIT

STATE OF _____)
)
COUNTY OF _____)

TO WHOM IT MAY CONCERN:

The undersigned, being duly sworn, deposes and says that: The undersigned is the _____ _____ of the _____ which has a contract with _____ for the _____ work for the premises known as _____ _____ owned by the Village of Northbrook, the total amount of the contract including extras is $_____, on which payment of $_____ _____ has been received prior to this payment; all waivers are true, correct, and genuine and delivered unconditionally and there is no claim either legal or equitable to defeat the validity of said waivers; the following are the names of all parties who have furnished material or labor, or both, for said work and all parties having contracts or subcontracts for specific portions of said work or for material entering into the construction thereof and the amount due or to become due to each, and the items mentioned include all labor and material required to complete said work according to plans and specifications:

NAMES	WHAT FOR	CONTRACT PRICE	AMOUNT PAID	THIS PAYMENT	BALANCE DUE
TOTAL LABOR AND MATERIAL TO COMPLETE					

; and there are no other contracts for said work outstanding, and there is nothing due or to become due to any person for material, labor, or other work of any kind done or to be done upon or in connection with said work other than above stated.

Signed this _____ day of _____, 20__. Signature: _____

Name: _____

Title: _____

Subscribed and sworn to be before me this ___ day of _____, 20__.

_____
Notary Public

VILLAGE OF NORTHBROOK
Generator Replacement - Sanitary Lift Station located at 135 Skokie Boulevard
BETWEEN VILLAGE OF NORTHBROOK AND (_____).
LABOR AND MATERIAL PAYMENT BOND
EXHIBIT E

STATE OF _____)
)
COUNTY OF _____)

TO WHOM IT MAY CONCERN:

The undersigned, being duly sworn, deposes and says that no waivers have been issued in anticipation of payment, but only to evidence payments received from

Contractor, Subcontractor or Supplier	Date	Check No.	Amount

The undersigned further deposes and says that the Village of Northbrook ("Owner") is entitled to rely on the accuracy of the statements made herein and in the Waiver of Lien to Date and Affidavit attached hereto; and that all rights to repudiate any waiver or to assert any claim against Owner are hereby waived, including, without limitation, any claim or right to repudiate any waiver based on industry custom, practice or course of dealing.

Signed this ___day of _____, 20__.

Signature: _____

Printed Name: _____

Title: _____

SUBSCRIBED AND SWORN
to before me this ____ day
of _____, 20__.

_____
Notary Public

My Commission expires: _____

#10088401_v1

VILLAGE OF NORTHBROOK
Generator Replacement - Sanitary Lift Station located at 135 Skokie Boulevard
BETWEEN VILLAGE OF NORTHBROOK AND (_____).
LABOR AND MATERIAL PAYMENT BOND

FINAL WAIVER OF LIEN

STATE OF _____)
)
COUNTY OF _____)

TO WHOM IT MAY CONCERN:

WHEREAS, the undersigned has been employed by _____ _____ to furnish _____ _____ for the premises known as _____ _____ _____ of which the Village of Northbrook is the Owner.

The undersigned, for and in consideration of _____ _____ ($_____) Dollars, and other good and valuable consideration, the receipt whereof is hereby acknowledged, do(es) hereby waive and release any and all lien or claim of, or right to, lien, under the statutes of the State of Illinois relating to mechanic's liens, with respect to and on said above-described premises, and the improvements thereon, and on the materials, supplies, equipment, fixtures, apparatus, machinery, or other items furnished, and on the moneys, funds, or other considerations due or to become due from the Owner, on account of labor, services, materials, supplies, equipment, fixtures, apparatus, machinery, or other items heretofore furnished, or which may be furnished at any time hereafter, by the undersigned for the above-described premises. The undersigned further represent(s) and warrant(s) that the statements contained in Exhibit A, attached hereto and by this reference incorporated herein and made a part hereof, are true and correct, and that the undersigned is authorized to make this Final Waiver of Lien.

Given under hand and seal this_____ day of _____, 20__.

Signature and Seal: _____ _____

NOTE: All waivers must be for the full amount paid. If waiver is for a corporation, corporate name should be used, corporate seal affixed and title of officer signing waiver should be set forth; if waiver is for a partnership, the partnership name should be used, partner should sign and designate himself as partner; if waiver is for a limited liability company, the company name should be used and managing member should sign and designate himself as managing member.

AFFIDAVIT

STATE OF _____)
)
COUNTY OF _____)

TO WHOM IT MAY CONCERN:

The undersigned, being duly sworn, deposes and says that: The undersigned is the _____ _____ of the _____ which has a contract with _____ _____ for the _____ work for the premises known as _____ _____ owned by the Village of Northbrook, the total amount of the contract including extras is $_____, on which payment of $_____ has been received prior to this payment; all waivers are true, correct, and genuine and delivered unconditionally and there is no claim either legal or equitable to defeat the validity of said waivers; the following are the names of all parties who have furnished material or labor, or both, for said work and all parties having contracts or subcontracts for specific portions of said work or for material entering into the construction thereof and the amount due or to become due to each, and the items mentioned include all labor and material required to complete said work according to plans and specifications:

NAMES	WHAT FOR	CONTRACT PRICE	AMOUNT PAID	THIS PAYMENT	BALANCE DUE
TOTAL LABOR AND MATERIAL TO COMPLETE					

; and there are no other contracts for said work outstanding, and there is nothing due or to become due to any person for material, labor, or other work of any kind done or to be done upon or in connection with said work other than above-stated.

VILLAGE OF NORTHBROOK
Generator Replacement - Sanitary Lift Station located at 135 Skokie Boulevard
BETWEEN VILLAGE OF NORTHBROOK AND (_____).
LABOR AND MATERIAL PAYMENT BOND

Signed this _____ day of _____, 20__. Signature: _____

_____

Name: _____

_____

Title: _____

_____

Subscribed and sworn to be before me this ___ day of _____, 20__.

_____
Notary Public

VILLAGE OF NORTHBROOK
Generator Replacement - Sanitary Lift Station located at 135 Skokie Boulevard
BETWEEN VILLAGE OF NORTHBROOK AND (_____).
LABOR AND MATERIAL PAYMENT BOND
EXHIBIT A

STATE OF _____)
)
COUNTY OF _____)

TO WHOM IT MAY CONCERN:

The undersigned, being duly sworn, deposes and says that no waivers have been issued in anticipation of payment, but only to evidence payments received, including without limitation the final payment, and any partial payments(s) not previously identified in a Waiver of Lien to Date; that the Village of Northbrook ("Owner") is entitled to rely on the accuracy of the statements made herein and in the Final Waiver of Lien and Affidavit attached hereto; and that all rights to repudiate any waiver or to assert any claim against Owner are hereby waived, including, without limitation, any claim or right to repudiate any waiver based on industry custom, practice or course of dealing.

Signed this ___day of _____, 20__.

Signature: _____

Printed Name: _____

Title: _____

SUBSCRIBED AND SWORN
to before me this ____ day
of _____, 20__.

_____
Notary Public

My Commission expires: _____

INTERSTATE
PowerSystems

March 24, 2025

Project Name: Northbrook Foley

Specification:

Compliance with any other written specification section(s) or drawing(s) is specifically excluded including those incorporated by reference.

Quotation:

The following MTU quotation is presented by the Interstate Power Systems located in Carol Stream, Illinois. Interstate Power Systems has been a distributor for power systems since 1958 that includes equipment sales, parts and a dedicated team of factory trained power system technicians.

We are pleased to quote the following new generator set and associated equipment:

Sourcewell Contract# 092222-RYC

- (1) 50kW Nat Gas set 208 VAC, emergency standby rated –
- (1) Sound Attenuated Enclosure
- (1) 100A ASCO ATS
- (1) Installation of generator performed by Powerlink Electric
- Start Up and Testing services
- Delivery to jobsite

Pricing will be found on the following pages as well as a detailed list of equipment and services to be included in this quote. Should you have any questions please feel free to contact me. I would also like to meet with you at your convenience to go over this quotation. The unit is “Made in America”.

Robert Alfini
Sales Engineer
Interstate Power Systems
708-642-5071

INTERSTATE PowerSystems

QUOTATION

MODEL:	MTU GS50 Nat Gas Generator Set
QUANTITY:	1
OUTPUT:	Standby Rated @ rated power factor: 50 kW
LOAD FACTOR:	85%
RATINGS: Certified	Emergency Standby Duty, UL 2200, NFPA 110, EPA NSPS
VOLTAGE:	208 VAC, 3-Phase, 4-Wire, @ .8 Power Factor
ENGINE:	MTU NG, 60 Hz, 1800 RPM Standard Duty Air, and Oil Filters Electronic Isochronous Governor
ALTERNATOR:	2/3 Pitch, 130°C Temperature Rise, PMG Voltage Regulator
COOLING SYSTEM:	Unit Mounted Radiator, 50°C/122°F
CONTROL PANEL:	Digital Control Panel with Microprocessor based controls and the following accessories:

NFPA 110, Level 1	Keypad Operation
Digital AC Meters	Voltage Adjusting
Digital Engine Gauges	Three-Position Selector Switch
Running Time Meter	Cycle Crank

CIRCUIT BREAKERS:	(1) 100 Amp, LSI, mounted/wired in NEMA 1 enclosure with standard lugs
BATTERY:	Heavy Duty Lead Acid Battery with Rack and Cables
BATTERY CHARGER:	12 Volt, 6 Amp, dual rate, Alarm package
BLOCK HEATER:	(120V single-phase)
MUFFLER:	Critical Grade Internal Muffler
ENCLOSURE:	Sound Attenuated Weather Protective Level 2
Automatic Transfer Switch:	(1) 100Amp 3Pole ATS Open Transition
WARRANTY:	Two (2) Year/3000-Hour Factory Warranty on genset.
START-UP :	Startup Services Including 2Hr Load Bank
FREIGHT:	Freight Included

INTERSTATE PowerSystems

Installation Services Performed by Powerlink Electric

Generator Replacement

Disconnect and remove existing generator
Dispose of existing generator.
Install new generator on to existing concrete pad.
Make final connections from existing electrical feed to generator.
Remove existing ATS
Install new ATS
Extend existing Conduit and wire to new ATS
Extend existing Conduit and wire to block heater and battery charger.
New natural gas connection and regulator

Clarifications:

All work to be performed during normal hours unless otherwise noted.
We have not included any landscape restoration and or repairs.
Fuel from existing underground tank, None included
This quote is only valid for 30 days.

INTERSTATE PowerSystems

mtu A Rolls-Royce solution

PRICING:

Net Price Sourcewell pricing for 50kw NG Generator	**……$47,123,.00**
Discount to standard Control Panel	**……-$2,602.00**
Discount to go to basic enclosure	**……...-$6,684.00**
OPTIONAL ITEMS:	
Installation as described above	**……..……$26,855.00**
Freight, Startup and Commissioning Service	**……...…$2,900.00**
100A Automatic Transfer Switch	**……$2,148.00**
Performance Bond	**……...$1,250.00**
Total Pricing	**……..$70,990.00**

NOTE: Sales tax is not INCLUDED

Clarifications and Exceptions

1. Units are shipped wet to include lube oil and a 50/50 water and anti-freeze mix.
2. One way freight to job site or riggers yard included. Additional freight and/or storage will be billed accordingly.
3. Seller is not quoting unit installation and all extended piping and wiring beyond the genset system provided by others.
4. Fuel and fuel permits by others, fuel can be added at the time of startup at the current market rate.
5. Offloading of all equipment by others, offloading can be requested for additional cost at time of release.
6. Startup and testing performed after verified installation and termination of all main line conduits, control wiring and any communications interface the customer has requested. Please fill out startup request for found in the O&M shipped with the unit. Startup and testing will be performed per the bid documents or as per requested by the customer.

INTERSTATE PowerSystems

mtu A Rolls-Royce solution

7. Unit training will be performed the same day as startup if feasible. If not it can be rescheduled at the owners discretion. Three days' notice required for request. Video tape sessions can be performed upon request at a slight charge.
8. Onsite testing and resistive load banking as per technical specifications, NETA testing, infrared testing, by others.
9. Sales tax and other fees or permits not included.
10. Quote is valid for 30 days unless confirmed otherwise.
11. Subject to the Term & Conditions provided herein or available at: http://www.istate.com/about/terms-and-conditions

TERMS AND CONDITIONS

GENERAL: Stenographical and clerical errors are subject to correction. Orders resulting from quotations become contracts only upon issuance of our formal acknowledgment. These terms and conditions and our invoice terms and conditions attached hereto are a complete statement of the agreement between us and you. In no event shall we be bound to any other agreement, term, or condition that is contained in an outside agreement between you and any other party unless expressly consented to by us in writing.

LIABILITY: Orders are accepted by us under the condition that we are not to be liable for losses or delays caused by strikes, accidents, fires or any other cause beyond our control. Damage resulting from improper storage or handling prior to placing products in service will not be considered our liability. We will not assume any responsibility, expense or liability for repairs made without our written consent. WE SHALL NOT BE LIABLE FOR ANY DAMAGES CAUSED BY THE PRODUCTS DELIVERED OR TO BE DELIVERED TO YOU, OR BY YOU OR ANY THIRD PARTY'S USE OF SUCH PRODUCTS. IN NO EVENT SHALL WE BE RESPONSIBLE FOR ANY INCIDENTAL, CONSEQUENTIAL, OR LIQUIDATED DAMAGES ASSOCIATED WITH THIS AGREEMENT.

RETURNED MATERIAL: No material may be returned without first obtaining written approval, and no claim will be allowed nor credit given for material returned without such written approval. It is your duty to inspect goods within ten days after receipt.

SHIPMENT: Our responsibility ceases with the delivery of merchandise in good order to transportation companies. Claims for shortage or damage in transit must be made by the customer against the carrier. In the absence of definite shipping instructions, we reserve the right to ship all material, upon completion, by any public carrier which in our opinion is satisfactory.

PRICING; PAYMENT FOR GOODS AND SERVICES: Prices, quotations, specifications and other terms and all statements appearing in the Seller's sales literature and otherwise made by the Seller are subject to change without notice, including as a result of changes in market conditions, increases in raw materials, component, labor or overhead costs or because of labor disruptions or fluctuations in production volumes. Without limiting the generality of the foregoing, all prices are subject to and shall be increased by sales tax where applicable. 100% of invoice due within 30 days of delivery of equipment.

TAXES: State and local sales and use taxes and excise taxes, where applicable, are in addition to quoted prices and will be billed unless the purchaser promptly certifies that the goods are for resale or are otherwise exempt.

WARRANTY: WE WARRANTY ONLY THAT THE PRODUCTS CONFORM TO THE SPECIFICATIONS SET FORTH ON THE FACE HEREOF OR AS THE MANUFACTURER MAY PROVIDE. ALL WARRANTIES ON PRODUCTS, PARTS AND/OR MATERIALS PROVIDED BY US SHALL BE ONLY THE WARRANTY PROVIDED BY THE APPLICABLE MANUFACTURER OF SUCH PRODUCTS, PARTS OR MATERIALS AND SUCH WARRANTIES MAY BE AND HEREBY ARE PASSED THROUGH FROM US TO YOU. WE MAKE NO WARRANTIES, EXPRESS OR IMPLIED, OF MERCHANTABILITY, OR FITNESS FOR A PARTICULAR PURPOSE OR OTHERWISE, EXCEPT AS SET FORTH IN THE PRECEDING SENTENCE OR ON THE FACE HEREOF. IF SERVICES WILL BE PROVIDED BY US PURSUANT TO THIS AGREEMENT, THOSE SERVICES WILL BE SUBJECT TO INTERSTATE'S SERVICE WARRANTY.

Signature below signifies approval and authorization to proceed with the purchase of equipment outlined in this proposal and acknowledges Interstate PowerSystems' terms and conditions above, including the Code of Conduct, Service Warranty, and General Terms & Conditions, which are expressly incorporated herein by reference, and are available at http://www.istate.com/about/terms-and-conditions or in hard copy upon request.

Print Name:_____

Title:_____

Signature:_____

Date:_____

INTERSTATE PowerSystems

mtu A Rolls-Royce solution

BRANCH LOCATIONS

ALTOONA, IA • CEDAR RAPIDS, IA • DAVENPORT, IA • CAROL STREAM, IL • ROCKFORD, IL • GARY, IN

IRON MOUNTAIN, MI • MINNEAPOLIS, MN • BILLINGS, MT • LINCOLN, NE • OMAHA, NE • BISMARCK, ND

FARGO, ND • GRAND FORKS, ND • WILLISTON, ND • SIOUX FALLS, SD • BUTLER, WI • GILLETTE, WY

MEMORANDUM

To: Village Manager Cara Pavlicek
From: Public Works Director Kelly Hamill
Date: 2025-08-12
Subject: A Resolution Authorizing an Amendment to the Contract with Miller Pipeline, LLC of Mount Prospect, IL for the 2025 Landwehr Road Sidewalk Improvements Project

Overview
Due to unanticipated conditions in the field, an increase funding available under the contingency for the contract 2025 Landwehr Road Sidewalk Improvements Project is requested.

Fiscal Impact
Resolution 2025-27, attached as supplemental information, authorized a base contract in the amount of $61,767 with change orders permitted in the amount of $6,176, for a total spending authority in the amount of $67,943. Prior to the start of construction, changes in the scope of work were identified in order to to meet ADA requirements. Due to the change in scope in Pay Items 1, 2, 8, 9, and 14, as well as the addition of curb and gutter Pay Items to complete these items, an amendment to the contract is recommended.

The total overage above the contract award and change order authority amount is $3,273 which will increase the total spending authority inclusive of change orders from $67,943 to $71,216. Sufficient funds are available for this unbudgeted expense in Account 40-7400-522-02 due to the savings on the Village's sidewalk program contract. It is also important to note that Cook County has agreed to reimburse the Village for the additional expense incurred on this project.

Acct. Name	Acct. #	Budget	Available	Requested	Remaining	Within Budget?
Infrastructure Capital Fund - Sidewalk Construction	40-7400-722-02	$574,117	$574,117	$3,273	$570,844	Yes

Recommendation
Approval.

Background

The Cook County Department of Transportation and Highways is currently making improvements to Landwehr Road from Willow Road to Dundee Road. At the mutual understanding of the County and the Village, sidewalk and ramp removal and installation, and miscellaneous drainage work at various locations along Landwehr Road were not included in the County Project and were constructed as part of a separate improvement led by the Village to be reimbursed by Cook County.

On April 4, 2024, the Village Board approved an Intergovernmental Agreement with Cook County for Landwehr Road improvements with the condition that the Village will contract for sidewalk and ramp removal and installation and miscellaneous drainage work along Landwehr Road at specific locations not included in the County project which costs incurred by the Village will be reimbursed by Cook County.

On March 11, 2025, the Village Board approved Resolution 2025-27 authorizing a contract with Miller Pipeline, LLC of Mount Prospect, Illinois, for the for the 2025 Landwehr Road Sidewalk Improvements Project. The Project commenced in March 2025 and was substantially completed in April 2025 as in the field, all Village work has been authorized but payment has not be made for amounts above the contract authorization.

Prior to the start of construction, Village Staff determined that the addition of curb and gutter was necessary to meet ADA requirements. This required adding pay items for curb and gutter. Further, additional sidewalk panels than what was called out by Cook County had to be removed and replaced to meet ADA requirements for the new crossings. Finally, due to the change in sidewalk layout, a proposed inlet had to be shifted, necessitating additional storm sewer pipe and trench backfill quantities. Due to the change in scope in Pay Items 1, 2, 8, 9, and 14, as well as the addition of curb and gutter Pay Items, an amendment to the contract is recommended to include this scope of work.

Staff recommends Village Board approval of A Resolution Authorizing an Amendment to the Contract with Miller Pipeline, LLC of Mount Prospect, IL for the 2025 Landwehr Road Sidewalk Improvements Project. Staff will be in attendance at the Village Board meeting for any questions that may arise.

A Resolution Authorizing an Amendment to the Contract with Miller Pipeline
Exhibit A - Change Order to Contract for Cook County Sidewalk Improvements on Landwehr Road
Supplemental Information - 2024-R-056 Resolution Approving an Intergovernmental Agreement with Cook County for Improvements along Landwehr Road
Supplemental Information - 2025-R-027 Resolution Authorizing the Execution of a Contract with Miller Pipeline, LLC of Mount Prospect, IL for the 2025 Landwehr Road Sidewalk Improvements Project

Resolution 2025-_____

BE IT RESOLVED by the President and Board of Trustees of the Village of Northbrook, County of Cook and State of Illinois, THAT:

A Resolution Authorizing an Amendment to the Contract with Miller Pipeline, LLC of Mount Prospect, IL for the 2025 Landwehr Road Sidewalk Improvements Project

is hereby adopted, as follows:

Section 1. Recitals.

Pursuant to Resolution 2025-27, the Village approved a contract for Sidewalk Improvements with Miller Pipeline, LLC of Mount Prospect, Illinois (*"**Contractor**"*) for the 2025 Landwehr Road Sidewalk Improvements Project (*"**Project**"*) in the amount of $61,767, with the authorization to execute change orders in the amount of $6,176, for a total spending authority of $67,943 (*"**Contract**"*).

Prior to the start of construction on the Project, Village staff determined that the addition of curb and gutter was necessary to meet ADA requirements. This required adding pay items for curb and gutter. Further, additional sidewalk panels beyond what were called out by Cook County had to be removed and replaced to meet ADA requirements for the new crossings. Finally, due to the change in sidewalk layout, a proposed inlet had to be shifted, necessitating additional storm sewer pipe and trench backfill quantities. Due to the change in scope in Pay Items 1, 2, 8, 9, and 14, as well as the addition of curb and gutter Pay Items, an amendment to the Contract ("***Amendment***") is required to pay for this necessary additional work that has been completed. In conjunction with this work, the base contract amount will be increased to $65,040 and the contingency will remain $6,176 for a total spending authority of $71,216. Sufficient funds are available in Account 40-7400-722-02 to pay for this additional work due to savings on the Village's Sidewalk Program.

The Cook County Department of Transportation and Highways agreed to reimburse the cost of the Project per the Intergovernmental Agreement authorized by Resolution 2024-56. Cook County has agreed to reimburse the Village the increased amount of $71,216.

The Project commenced in March 2025 and was substantially completed by the Contractor in April 2025, including the additional work authorized in the Amendment. Although the additional work has been completed, the Amendment is needed to confirm the adjustment to the scope of work and authorize the additional base contract and contingency amount.

The President and the Board of Trustees find that the circumstances requiring a change to the Contract were not reasonably foreseeable at the time it was originally bid and that approving the Amendment will be in the best interest of the Village and authorized by law and determined that it is in the best interest of the Village and the public to approve the Amendment.

Section 2. Approval of Amendment to the Contract and Spending Authority.

The Amendment to the Contract to confirm the adjustments to the scope of work while also amending the contract amount to $65,040 with a contingency of $6,176 for a total spending authority of

$71,216 is hereby approved in a form acceptable to the Village Manager and Village Attorney.

Section 3. Authorization of Expenditure.

The Village Manager is hereby authorized and directed to execute such documents and make such payments as are necessary to pay the costs of the work completed by the Contractor for the Project in the not to exceed amount of $71,216.

Adopted:

RESULT:
MOVER:
SECONDER:
AYES:
ABSTAIN:
ABSENT:

ATTEST:

Village President

Village Clerk

VILLAGE OF NORTHBROOK
CONTRACT FOR
2025 LANDWEHR ROAD SIDEWALK IMPROVEMENTS
BETWEEN VILLAGE OF NORTHBROOK AND MILLER PIPELINE, LLC
CONTRACT AMENDMENT

CONTRACT AMENDMENT NUMBER 1

I. ITEM DESCRIPTIONS

ITEM 1.

Description of Changes Involved:

A Resolution Authorizing an Amendment to the Contract with Miller Pipeline, LLC of Mount Prospect, IL for the 2025 Landwehr Road Sidewalk Improvements Project seeks amend the base contract amount to $65,040.00, an increase of $3,273.00. The contingency approved by Change Order 1 will remain at $6,176.00, for a total spending authority of $71,216.00. This would require a Budget Amendment of $3,273.00 to Account 40-7400-722-02. Per the IGA authorized in Resolution 2024-56, Cook County Department of Transportation and Highways shall reimburse the Village for the cost of this project.

Reason for Change:

Prior to the start of construction, Village Staff determined that the addition of curb and gutter was necessary to meet ADA requirements. This required adding pay items for curb and gutter. Further, additional sidewalk panels than what was called out by Cook County had to be removed and replaced to meet ADA requirements for the new crossings. Finally, due to the change in sidewalk layout, a proposed inlet had to be shifted, necessitating additional storm sewer pipe and trench backfill quantities. Due to the change in scope in Pay Items 1, 2, 8, 9, and 14, as well as the addition of curb and gutter Pay Items, an amendment to the contract is recommended to include this scope of work.

Revision in Price

An additional $3,273.00 in authorized contract amendment is requested for a total contract expenditure not to exceed the amount of $71,216.00. Additionally, Cook County has agreed to reimburse the extra $3,273.00.

VILLAGE OF NORTHBROOK
CONTRACT FOR
2025 LANDWEHR ROAD SIDEWALK IMPROVEMENTS
BETWEEN VILLAGE OF NORTHBROOK AND MILLER PIPELINE, LLC
CONTRACT AMENDMENT

II. ADJUSTMENTS IN AMOUNT OF CONTRACT:

Amount of Original Contract Price	$61,767.00
Net (addition) (reduction) due to previous Change Orders Nos. __1__ to __1__	$6,176.00
Amount of Contract Price, **not including** this Contract Amendment, **including** Change Orders Nos. __1__ to __1__	$67,943.00
Change (addition) (~~reduction~~) to Contract Price due to this Contract Amendment	$3,273.00
Amount of Contract Price, **including** this Contract Amendment, **not including** Change Orders Nos. __1__ to __1__	$65,040.00
Amount of Contract Price, **including** this Contract Amendment, **including** Change Orders Nos. __1__ to __1__	$71,216.00

III. ACCEPTANCE.

RECOMMENDED FOR ACCEPTANCE:

By: Michael Weller Digitally signed by: Michael Weller Date: 2025.07.31 09:23:55 -05'00'
Project Engineer

Date: 07/31/2025

ACCEPTED:

By:
Contractor

Date: 8/4/2025

Kevin Bussey
Dir. of Finance

APPROVED:

By:
Village Manager

Date:

Item No.	Items	Unit	Contract Quantity	Unit Price	Contract Total	Final Quantity	Pre-Final Total	Difference in Quantity	Total Difference
1	EARTH EXCAVATION	CU YD	20.00	$ 100.00	$ 2,000.00	38.84	$ 3,884.00	18.84	$ 1,884.00
2	TRENCH BACKFILL	CU YD	11.00	$ 75.00	$ 825.00	13.18	$ 988.50	2.18	$ 163.50
3	TOPSOIL FURNISH AND PLACE, 4"	SQ YD	180.00	$ 15.00	$ 2,700.00	180.00	$ 2,700.00	0.00	$ -
4	NITROGEN FERTILIZER NUTRIENT	POUND	4.00	$ 45.00	$ 180.00	0.00	$ -	-4.00	$ (180.00)
5	POTASSIUM FERTILIZER NUTRIENT	POUND	4.00	$ 45.00	$ 180.00	0.00	$ -	-4.00	$ (180.00)
6	SODDING, SALT TOLERANT	SQ YD	180.00	$ 23.00	$ 4,140.00	180.00	$ 4,140.00	0.00	$ -
7	AGGREGATE BASE COURSE, TYPE B 4"	SQ YD	213.00	$ 12.00	$ 2,556.00	207.23	$ 2,486.76	-5.77	$ (69.24)
8	PROTECTIVE COAT	SQ YD	180.00	$ 1.50	$ 270.00	207.21	$ 310.82	27.21	$ 40.82
9	PORTLAND CEMENT CONCRETE SIDEWALK 5 INCH	SQ FT	511.00	$ 10.36	$ 5,293.96	835.00	$ 8,650.60	324.00	$ 3,356.64
10	PORTLAND CEMENT CONCRETE SIDEWALK 8 INCH	SQ FT	1,101.00	$ 15.90	$ 17,505.90	1030.00	$ 16,377.00	-71.00	$ (1,128.90)
11	SIDEWALK REMOVAL	SQ FT	879.00	$ 1.61	$ 1,415.19	1235.00	$ 1,988.35	356.00	$ 573.16
12	END SECTIONS 15"	EACH	2.00	$ 1,000.00	$ 2,000.00	2.00	$ 2,000.00	0.00	$ -
13	PIPE CULVERTS, CLASS C, TYPE 1 15"	FOOT	21.00	$ 150.00	$ 3,150.00	21.00	$ 3,150.00	0.00	$ -
14	STORM SEWERS, CLASS A, TYPE 1 12"	FOOT	58.00	$ 150.00	$ 8,700.00	68.00	$ 10,200.00	10.00	$ 1,500.00
15	INLETS, TYPE A, TYPE 8 GRATE	EACH	1.00	$ 2,500.00	$ 2,500.00	1.00	$ 2,500.00	0.00	$ -
16	CATCH BASINS TO BE ADJUSTED WITH NEW TYPE 1 FRAME, CLOSED LID	EACH	1.00	$ 2,500.00	$ 2,500.00	1.00	$ 2,500.00	0.00	$ -
17	DETECTABLE WARNINGS (SPECIAL)	SQ FT	90.00	$ 65.00	$ 5,850.00	90.00	$ 5,850.00	0.00	$ -
		Total Cost with no AUP Items			$ 61,766.05		$ 67,726.03		$ 5,959.98
AUP 1	CURB AND GUTTER	FOOT	74.00	$ 47.48	$ 3,513.52	61.00	$ 2,896.28	61.00	$ 2,896.28
AUP 2	CURB REMOVAL	FOOT	35.00	$ 23.74	$ 830.90	25.00	$ 593.50	25.00	$ 593.50
		Total Cost with AUP Items			$ 66,110.47		$ 71,215.81		$ 9,449.76

Base Contract per Resolution 2025-27	$ 61,767
Amount Spent to Date	$ 71,216
10% Contingency Requested in Change Order	**$ 6,176**
Total Spending Authority After Change Order	$ 67,943
Additional Amount Requested in Contract Amendment	**$ 3,273**
Amended Contract Requested in Contract Amendment	$ 65,040
Total Spending Authority per Amended Contract and Change Order	**$ 71,216**

Resolution 2024-R-56

BE IT RESOLVED by the President and Board of Trustees of the Village of Northbrook, County of Cook and State of Illinois, THAT:

A Resolution Approving an Intergovernmental Agreement with Cook County for Improvements along Landwehr Road

is hereby adopted, as follows:

Section 1. Recitals.

The Cook County Department of Transportation and Highways intends to make improvements to Landwehr Road from Willow Road to Dundee Road (the "***County Project***"). The scope of work for the County Project includes, but is not limited to, roadway rehabilitation of the three-mile corridor, including patching and resurfacing of the existing roadway, striping, median removal, curb and gutter removal/replacement, sidewalk and ADA compliant curb ramp installation and new traffic signal installations at various intersections.

At the mutual understanding of the County and the Village, sidewalk and ramp removal and installation and miscellaneous drainage work along Landwehr Road at the following locations will not be included in the County Project and shall be constructed as part of a separate improvement led by the Village ("***Village Project***") to be reimbursed by Cook County.

Based on these factors, staff recommends approval of an Intergovernmental Agreement between the Village and the County for reimbursement by the County of all construction costs associated with the Village Project, as well as related construction engineering costs in the amount not to exceed $55,000 ("***Agreement***").

The President and the Board of Trustees have considered the Agreement and determined that it is in the best interests of the Village and the public to enter into the Agreement.

Section 2. Approval of Agreement.

The Agreement shall be, and is hereby, approved in substantially the form attached to this Resolution as ***Exhibit A***.

Section 3. Authorization to Execute Agreement.

The Village President shall be, and is hereby, authorized and directed to execute and seal, on behalf of the Village, provided, however, that if such executed copy of the Agreement is not received by the Village Clerk within 90 days after the date of adoption of this Resolution, then this authority to execute and seal the corresponding contract shall, at the option of the President and Board of Trustees, be null and void.

Adopted: 4/9/2024

RESULT:	**ADOPTED [6 TO 0]**
MOVER:	Johannah Hebl, Trustee
SECONDER:	Daniel Pepoon, Trustee
AYES:	Israel, Ross, Pepoon, Hebl, Ebhomielen, Kohler
NAYES:	None
ABSTAIN:	None
ABSENT:	Kathryn Ciesla, President

/s/ Robert Israel
Acting Village President

ATTEST:

/s/ Sam Reiss
Deputy Village Clerk

INTERGOVERNMENTAL AGREEMENT

County of Cook

Landwehr Road
Hampton Court to Dundee Road

Village of Northbrook

Section: 22-PRPN1-00-PV

This **Intergovernmental Agreement** (the "Agreement") is made and entered into on this _____day of _____, 2024, by and between the County of Cook, a body politic and corporate of the State of Illinois (the "County"), acting by and through its Department of Transportation and Highways (the "Department"), and the Village of Northbrook, a municipal corporation of the State of Illinois (the "Village"). The County and Village are sometimes referred to herein individually as a "Party" and collectively as the "Parties."

RECITALS

WHEREAS, in order to facilitate the free flow of traffic and ensure the safety of the motoring public, the Parties desire to make improvements to Landwehr Road from Hampton Court to Dundee Road (the "County Project");

WHEREAS, the scope of work for the County Project includes, but is not limited to, roadway rehabilitation of the three-mile corridor, including patching and resurfacing of the existing roadway, striping, median removal, curb and gutter removal/replacement, sidewalk and ADA compliant curb ramp installation and new traffic signal installations at various intersections;

WHEREAS, at the mutual understanding of the County and the Village, sidewalk and ramp removal and installation and miscellaneous drainage work along Landwehr Road at the following locations will not be included in the County Project and shall be constructed as part of a separate improvement led by the Village ("Village Project"):

1. Landwehr Road/Old Mill Road
2. Landwehr Road/Palm Lane and Landwehr/Robincrest Drive
3. Landwehr Road/Hemlock Lane
4. Landwehr Road/Longvalley Drive
5. Landwehr Road/River Falls Drive
6. Landwehr Road/Moon Hill Drive

WHEREAS, this Agreement sets forth certain responsibilities of the Parties for the County and Village Projects;

WHEREAS, the County, by virtue of its powers as set forth in the Counties Code, 55 ILCS 5/1-1 et seq., and the Illinois Highway Code, 605 ILCS 5/1-101 et seq., is authorized to enter into this Agreement;

WHEREAS, the Village, by virtue of its powers as set forth in the Illinois Municipal Code, 65 ILCS 5/1-1-1 et seq., is authorized to enter into this Agreement; and

WHEREAS, this Agreement is further authorized under Article VII, Section 10 of the Illinois Constitution and by the provisions of the Intergovernmental Cooperation Act, 5 ILCS 220/1 et seq.

NOW, THEREFORE, in consideration of the aforementioned recitals and the mutual covenants contained herein, the Parties agree as follows:

I. CONSTRUCTION AND CONSTRUCTION ENGINEERING

A. **Plans and Specifications.** The Village shall prepare final construction plans and specifications for the Village Project and submit them to the County for review prior to the start of construction. The County may review the construction plans and specifications within fourteen (14) calendar days of receipt thereof. If the Village does not receive comments from the County within this time period, or receive a request for an extension of time, which request shall be reasonably considered, the lack of response shall be deemed an approval of the plans and specifications. In the event of disapproval, the County will detail in writing its objections to the proposed plans and specifications for review and consideration by the Village. Any dispute(s) concerning the plans and specifications for the Village Project shall be resolved in accordance with Section IV.H. of this Agreement.

B. **Construction.** The Village shall cause the Village Project to be constructed in accordance with the approved plans and specifications, subject to reimbursement by the County as hereinafter stipulated.

C. **Insurance.** The Village shall require that its construction contractor name the County as an additional insured party under the contractor's general liability insurance policy.

D. **Construction Engineering.** The Village shall perform, or cause to be performed, construction engineering services for the Village Project.

E. **Schedule Coordination.** The Village shall schedule and coordinate the performance of the Village Project so as to not interfere with the completion of the County Project.

F. **Pre-Construction and Progress Meetings.** The Village shall provide not less than fourteen (14) calendar days' advance written notice to the County prior to the pre-construction meeting for the Village Project and not less than seven (7) calendar days' advance written notice to the County prior to the start of construction of the Village Project. A representative from the County shall attend the pre-construction meeting and be available for all other construction meetings as needed.

G. **Permits and Fees.** The Village shall secure all regulatory permits required to construct the Village Project. Any fees for said permits shall be paid by the Village.

H. **Right of Inspection.** The County and its authorized agents shall have reasonable rights of inspection (including pre-final and final inspection) during and upon completion of construction of the Village Project. The Village shall work cooperatively with the County to address and resolve any concerns raised by the County with respect to construction and/or construction engineering of the Village Project. Any dispute(s) concerning

construction and/or construction engineering of the Village Project shall be resolved in accordance with Section IV.H. of this Agreement.

I. **Final Inspection**. The County shall participate in a final inspection of the Village Project. The Village shall provide not less than fourteen (14) calendar days' advance written notice to the County prior to the date of the final inspection. The County shall submit final punch list items to the Village not less than seven (7) calendar days prior to the date of the final inspection.

J. **Permits.** The Village shall apply for and the County shall not unreasonably withhold any and all permits for right of access (ingress or egress) and/or temporary use of the County's property and/or right of way within the limits of the Village Project to the Village and/or its agents, without charge of permit fees to the Village. Similarly, the County shall apply for and the Village shall not unreasonably withhold any and all permits for right of access (ingress or egress) and/or temporary use of the Village's property and/or right of way within the limits of the County Project to the County and/or its agents, without charge of permit fees to the County.

II. MAINTENANCE

A. **Definition.** As used herein, the terms "maintain" and "maintained" mean keeping the facility being maintained in good and sufficient repair and appearance. Such maintenance includes the full responsibility for the construction, removal and/or replacement of the maintained facility when needed.

B. **Roadway**. Upon completion of the County Project, the County shall continue to own, operate, and maintain those portions of Landwehr Road that are under its established jurisdictional authority. Maintenance responsibilities include, but are not limited to, all routine surface and pothole repairs, temporary full-depth patches, crack and joint sealing, cleaning and litter pickup, minor curb and gutter repair, drainage structure repair and cleaning, snow and ice control, and other operational services.

C. **Sidewalks**. The Village shall own, operate, and maintain any sidewalks constructed or improved as part of the County and Village Projects, in compliance with the Americans with Disabilities Act (ADA), Public Right of Way Accessibility Guidelines (PROWAG), and all other applicable federal and state laws and regulations. Maintenance responsibilities include, but are not limited to, maintenance and repair of surfaces, including grinding, removal and replacement of sidewalks, and removal of weeds and/or debris.

D. **Indemnification.** The Village shall defend, indemnify, and hold harmless the County and its commissioners, officials, employees, agents, and representatives, and their respective heirs, successors, and assigns, from and against any and all costs, expenses, attorneys' fees, losses, damages, and liabilities incurred and/or suffered, directly or indirectly, from or attributable to claims arising out of or incident to the construction, use, repair and/or maintenance of any sidewalks constructed or improved as part of the County and Village Projects.

E. **Survives Termination.** The Parties' maintenance responsibilities described in this section shall survive termination of this Agreement.

III. FINANCIAL

A. **County Cost Participation.** The County shall pay all actual construction and construction engineering costs for the County Project.

The County also agrees to reimburse the Village for all construction costs associated with the Village Project, as well as related construction engineering costs, which shall be calculated as ten percent (10%) of the actual construction costs.

Notwithstanding the foregoing, the County's maximum cost participation under this Agreement shall not exceed $55,000.

B. **Reimbursement.** Upon completion of the Village Project and receipt of an invoice from the Village, the County shall reimburse the Village for its share of the costs of the Village Project as set forth in this Agreement.

C. **Required Documentation.** In order to receive reimbursement from the County, the Village must submit the following documentation along with the invoice requesting payment:

i. A cover letter addressed to the Department's Bureau Chief of Construction, including the name of the Project and its associated section number;
ii. Copies of all cancelled checks paid to the contractor(s) and/or consultant(s) (or copies of the associated bank ledgers reflecting the payments);
iii. Copies of all associated invoices submitted to the Village by the contractor(s) and/or consultant(s) for the services rendered.

D. **Ineligible Costs.** The County shall not reimburse the Village for any costs that are:

i. Contrary to the provisions of this Agreement;
ii. Not directly related to carrying out construction or construction engineering services for the Village Project;
iii. Not paid by the Village or its consultant(s) and/or contractor(s);
iv. Of a regular and continuing nature, including, but not limited to, administrative costs, staff and overhead costs, rent, utilities, and maintenance costs;
v. Incurred without the consent of the County after the County has given the Village written notice of suspension or termination of any or all of the County's obligations under this Agreement; and/or
vi. In excess of the County's maximum financial contribution under this Agreement, as set forth in Section III.A. above.

E. **Substitutions/Substitute Work.** Either Party may request in writing that work or materials be substituted with different work or materials. Provided that the substitute work and/or materials do not unreasonably delay the Village Project schedule, the Village

shall cause said substitute work and/or materials to be included in the Village Project. Each Party shall pay the costs of substitutions for their associated work items.

F. **Additional Work.** Either Party may request in writing that additional work be added to the Village Project. Provided that the additional work does not unreasonably delay the Village Project schedule or increase the cost of the Village Project to exceed the County's maximum cost participation as set forth in Section III.A., the Village shall cause said additional work to be included in the Village Project. Additional work shall be paid for by force account or agreed unit price. Each Party will pay the costs of additional work for their associated work items.

G. **Funding Breakdown.** A funding breakdown is incorporated into and made a part of this Agreement and attached as Exhibit A.

IV. GENERAL CONDITIONS

A. **Authority to Execute.** The Parties have read and reviewed the terms of this Agreement and by their signatures as affixed below represent that the signing party has the authority to execute this Agreement and that the Parties intend to be bound by the terms and conditions contained herein.

B. **Binding Successors.** This Agreement shall be binding upon and inure to the benefit of the Parties and their respective successors and approved assigns.

C. **Compliance with Laws, Rules and Regulations.** The Parties shall at all times observe and comply with all federal, state and local laws and regulations, as amended from time to time, in carrying out the terms and conditions of this Agreement.

D. **Conflicts of Interest.** The Village understands and agrees that no director, officer, agent, or employee of the Village may have an interest, whether directly or indirectly, in any contract or agreement or the performance of any work pertaining to this Agreement; represent, either as an agent or otherwise, any person, trust, or corporation, with respect to any application or bid for any contract or agreement or work pertaining to this Agreement; or take, accept, or solicit, either directly or indirectly, any money or thing of value as a gift or bribe or means of influencing their vote or actions. Any contract or agreement made and procured in violation of this provision is void and no funds under this Agreement may be used to pay any cost under such a contract or agreement.

E. **Conflict with Exhibits.** In the event of a conflict between any exhibit attached hereto and the text of this Agreement, the text of this Agreement shall control.

F. **Counterparts.** This Agreement may be executed in two (2) or more counterparts, each of which shall be deemed an original and all of which shall be deemed one and the same instrument.

G. **County Section Number.** The Project is hereby designated as County section number 22-PRPN1-00-PV . The Parties shall include County section number 22-PRPN1-00-PV on all

project- related submittals, including, but not limited to, written correspondence and invoices.

H. **Designation of Representatives.** Not later than fourteen (14) calendar days after the Effective Date of this Agreement, as defined in Section IV.J. below, each Party shall designate in writing a full-time representative for the carrying out of this Agreement. Each representative shall have the authority, on behalf of the respective Party, to make decisions relating to the work covered by this Agreement. Representatives may be changed, from time to time, by subsequent written notice. Each representative shall be readily available to the other.

I. **Disputes.** In the event of any dispute, claim, question or disagreement arising out of the performance of this Agreement, the Parties shall consult and negotiate with each other in good faith to settle the dispute, claim, question or disagreement. In the event the Parties cannot mutually agree on the resolution of the dispute, claim, question or disagreement, the decision of the Department's Superintendent shall be final.

J. **Effective Date.** The Effective Date of this Agreement shall be the date that the last authorized signatory signs and dates this Agreement. This Agreement shall become effective only in the event the corporate authorities of each Party approve this Agreement.

K. **Entire Agreement.** This Agreement constitutes the entire agreement of the Parties concerning all matters specifically covered by this Agreement and supersedes all prior written and oral agreements, commitments and understandings among the Parties. There are no representations, covenants, promises or obligations not contained in this Agreement that form any part of this Agreement or upon which any of the Parties is relying upon in entering into this Agreement.

L. **Force Majeure.** Neither Party shall be liable for any delay or non-performance of its obligations hereunder by any contingency reasonably beyond its control, including, but not limited to, acts of God, war, civil unrest, labor strikes or walkouts, fires, pandemics and/or natural disasters.

M. **Inactivity.** The County may terminate this Agreement if construction work for the Village Project has not commenced within eighteen (18) months after the Effective Date of this Agreement.

N. **Liability.** Subject to Section II.D. herein, no official, officer, employee, attorney, agent or assign of either Party shall be liable for any negligent or wrongful act chargeable to the other unless such liability is imposed by a court of competent jurisdiction. The County assumes no liability for the actions of the Village and its officials, officers, employees, attorneys or agents under this Agreement. The Village assumes no liability for the actions of the County and its officials, officers, employees, attorneys or agents under this Agreement. Each Party agrees to be solely responsible for liability, suits, losses, judgments, damages or other demands imposed upon it as a result of its own actions or omissions in the performance of its obligations specified in this Agreement. This Agreement shall not be construed as seeking to enlarge or diminish any obligation or duty

owed by one Party against the other or against third parties. In the event of a claim for any wrongful or negligent act, each Party shall bear the cost of its own defense.

O. **Modification.** This Agreement may only be modified by a written instrument executed by the Department's Superintendent and an authorized representative of the Village.

P. **Notices.** Unless otherwise specified, all reports, notices and other communications related to this Agreement shall be in writing and shall be personally delivered or mailed via first class, certified or registered U.S. Mail or electronic mail delivery to the following persons at the following addresses:

To the COUNTY:
Jennifer "Sis" Killen, P.E., PTOE
Superintendent
Cook County Department of Transportation and Highways
69 W. Washington Street, 24th Floor
Chicago, IL 60602
E-mail: Jennifer.Killen@cookcountyil.gov

To the VILLAGE:
Jack Bielak, P.E., CFM
Village Engineer
Village of Northbrook
1225 Cedar Lane
Northbrook, IL 60062
E-mail: jack.bielak@northbrook.il.us

Q. **Recitals.** The introductory recitals included at the beginning of this Agreement are agreed to and incorporated into and made a part of this Agreement.

R. **Records Maintenance.** The Village shall maintain during the term of this Agreement and for a period of three (3) years thereafter complete and adequate financial records, accounts and other records to support all Village Project expenditures. These records and accounts will include, but not be limited to, records providing a full description of each activity being assisted with County funds; a general ledger that supports the costs being charged to the County; records documenting procurement of goods and services; contracts for goods and services; invoices; billing statements; cancelled checks; bank statements; schedules containing comparisons of budgeted amounts and actual expenditures; and construction progress schedules.

S. **Reviews and Audits.** The Village shall give the County access to all books, accounts, records, reports and files pertaining to the administration, receipt and use of County funds under this Agreement to necessitate any reviews or audits.

T. **Section Headings.** The descriptive section and subsection headings used in this Agreement are for convenience only and shall not control or affect the meaning or construction of any of the provisions thereof.

U. **Severability.** If any term of this Agreement is to any extent illegal, otherwise invalid, or incapable of being enforced, such term shall be excluded to the extent of such invalidity

or unenforceability; all other terms hereof shall remain in full force and effect; and, to the extent permitted and possible, the invalid or unenforceable term shall be deemed replaced by a term that is valid and enforceable and that comes closest to expressing the intention of such invalid or unenforceable term.

V. **Suspension; Early Termination.** Subject to Section IV.L. above, if the County determines that the Village has not complied with or is not complying with, has failed to perform or is failing to perform, has not met or is not meeting significant project milestones or objectives, or is in default under any of the provisions of this Agreement, whether due to failure or inability to perform or any other cause whatsoever, the County, after written notification to the Village of said non-compliance or default and failure by the Village to correct said violations within sixty (60) calendar days, may:

   i. Suspend or terminate this Agreement in whole or in part by written notice, and/or;
   ii. Demand refund of any funds disbursed to the Village;
   iii. Temporarily withhold payments pending correction of deficiencies by the Village;
   iv. Disallow all or part of the cost of the activity or action not in compliance; or
   v. Take other remedies legally available.

W. **Termination.** Unless otherwise agreed to by the Parties in writing, this Agreement terminates upon completion of the Village Project and final reimbursement by the County, or November 30, 2026, whichever date is earlier.

X. **Venue and Applicable Law.** All questions of interpretation, construction and enforcement, and all controversies with respect to this Agreement, will be governed by the applicable constitutional, statutory and common law of the State of Illinois. The Parties agree that, for the purposes of any litigation relative to this Agreement and its enforcement, venue will be in the Circuit Court of Cook County, Illinois or the Northern District, Eastern Division of the United States District Court, Chicago, Illinois, and the Parties consent to the *in personam* jurisdiction of said Courts for any such action.

Y. **Waiver of Default.** The failure by the County or Village to seek redress for violation of or to insist upon strict performance of any condition or covenant of this Agreement shall not constitute a waiver of any such breach or subsequent breach of such covenants, terms, conditions, rights and remedies. No provision of this Agreement shall de deemed waived by the County or Village unless such provision is waived in writing.

(signature page to follow)

IN WITNESS WHEREOF, the Parties have executed this Agreement on the dates indicated.

EXECUTED BY COUNTY OF COOK:

_____
Toni Preckwinkle
President
Cook County Board of Commissioners

This _____ day of _____, _____

ATTEST: _____
County Clerk

EXECUTED BY VILLAGE OF NORTHBROOK:

_____
Kathryn L. Ciesla
Village President

This _____ day of _____, _____

ATTEST: _____
Village Clerk

RECOMMENDED BY:

_____
Jennifer "Sis" Killen, P.E., PTOE
Superintendent
County of Cook
Department of Transportation and Highways

APPROVED AS TO FORM:
Kimberly M. Foxx, State's Attorney

By: _____
Assistant State's Attorney

EXHIBIT A

Funding Breakdown for
"Village Project"

ITEM	VILLAGE SHARE	COUNTY SHARE
Construction	0%	100%
Construction Engineering	0%	100% (to be calculated as 10% of actual construction costs)

NOTE: The County's maximum cost participation under this Agreement shall not exceed $55,000.

Resolution 2025-R-27

BE IT RESOLVED by the President and Board of Trustees of the Village of Northbrook, County of Cook and State of Illinois, THAT:

A Resolution Authorizing Execution of a Contract with Miller Pipeline, LLC of Mount Prospect, IL for the 2025 Landwehr Road Sidewalk Improvements Project

is hereby adopted, as follows:

Section 1. RECITALS

The Cook County Department of Transportation and Highways intends to make improvements to Landwehr Road from Willow Road to Dundee Road (the "***County Project***"). The scope of work for the County Project includes, but is not limited to, roadway rehabilitation of the three-mile corridor, including patching and resurfacing of the existing roadway, striping, median removal, curb and gutter removal/replacement, sidewalk and ADA compliant curb ramp installation and new traffic signal installations at various intersections.

At the mutual understanding of the County and the Village, sidewalk and ramp removal and installation and miscellaneous drainage work at various locations along Landwehr Road will not be included in the County Project and shall be constructed as part of a separate improvement led by the Village ("***Village Project***") to be reimbursed by Cook County.

Based on these factors, the President and the Board of Trustees approved of an Intergovernmental Agreement between the Village and the County for reimbursement by the County of all construction costs associated with the Village Project, as well as related construction engineering costs in the amount not to exceed $55,000 ("***IGA***"). The IGA was approved at the April 9, 2024 Regular Board Meeting.

Staff prepared bid packages for the construction of the Village Project. On January 16, 2025 eight (8) sealed, responsive bids were received. The lowest responsible bid was received from Miller Pipeline, LLC of Mount Prospect, Illinois ("***Contractor***") in the amount of $61,767. The Village has included funds in FY 2024/25 for work beginning in FY 2024/25 in Account No. 40-7400-722-02 (Infrastructure Capital Fund - Sidewalk Construction) and the Village will budget funds in future fiscal years until the Village Project is closed out with the County.

Staff reached out to the County with the bid tab due to the construction costs exceeding $55,000. On February 6, 2025, the County agreed that it would cover the difference between the previous not the exceed amount and the lowest responsible bid amount. The County stated that it did not have an objection to the Village awarding the contract to the Contractor.

Based on these factors, staff recommends entering into a contract with the Contractor in the amount of $61,767 ("***Agreement***") for the Village Project. Due to various unforeseeable factors and field conditions associated with the Village Project, Village staff recommends authorizing the Village Manager to enter into one or more change orders to the Agreement for additional unforeseen items of work necessary to complete the Village Project in an amount not to exceed $6,176.

The President and the Board of Trustees have considered the Agreement and determined

that it is in the best interests of the Village and the public to enter into the Agreement.

Section 2. APPROVAL OF AGREEMENT

The Agreement shall be, and is hereby, approved in substantially the form attached to this Resolution as ***Exhibit A***.

Section 3. AUTHORIZATION TO EXECUTE AGREEMENT

The Village Manager and the Village Clerk shall be, and are hereby, authorized and directed to execute and seal, on behalf of the Village, the Agreement and all necessary documentation related thereto.

Section 4. AUTHORIZATION TO EXECUTE CHANGE ORDERS

The Village Manager is authorized to execute one or more Contract Change Orders for additional work consisting of additional unforeseen items of work related to, or arising from other work contemplated by the Agreement in the amount of $6,176 subject to the Village Manager making the necessary determination that the work contemplated by the change order complies with Section 33E-9 of Article 33E of the Criminal Code of 1961 and placing a copy of such determinations in the Agreement file.

Approved: 03/11/25

RESULT:	**APPROVED [5 – 0]**
MOVER:	Robert Israel, Trustee
SECONDER:	Daniel Pepoon, Trustee
AYES:	Israel, Ross, Pepoon, Ebhomielen, Kohler
NAYES:	None
ABSTAIN:	Kathryn Ciesla, President
ABSENT:	Johannah Hebl, Trustee

/s/ Kathryn Ciesla
Village President

ATTEST:

/s/ Sam Reiss
Deputy Village Clerk

CONTRACT FOR

2025 LANDWEHR ROAD SIDEWALK IMPROVEMENTS
BETWEEN VILLAGE OF NORTHBROOK AND MILLER PIPELINE, LLC

Prepared for:

Village of Northbrook
1225 Cedar Lane
Northbrook, IL 60062

Prepared by:

Public Works Department
655 Huehl Road
Northbrook, IL 60062

VILLAGE OF NORTHBROOK
CONTRACT FOR
2025 LANDWEHR ROAD SIDEWALK IMPROVEMENTS
BETWEEN VILLAGE OF NORTHBROOK AND MILLER PIPELINE, LLC

TABLE OF CONTENTS

			Page
ARTICLE I	**THE WORK**		3
	1.1	Performance of the Work	3
	1.2	Commencement and Completion Dates	3
	1.3	Required Submittals	3
	1.4	Review and Interpretation of Contract Provisions	4
	1.5	Conditions at the Work Site; Record Drawings	4
	1.6	Technical Ability to Perform	5
	1.7	Financial Ability to Perform	5
	1.8	Time	5
	1.9	Safety at the Work Site	5
	1.10	Cleanliness of the Work Site and Environs	6
	1.11	Damage to the Work, the Work Site and Other Property	6
	1.12	Subcontractors and Suppliers	6
	1.13	Simultaneous Work By Others	6
	1.14	Occupancy Prior to Final Payment	6
	1.15	Owner's Right to Terminate or Suspend Work for Convenience	7
ARTICLE II	**CHANGES AND DELAYS**		7
	2.1	Changes	7
	2.2	Delays	7
ARTICLE III	**CONTRACTOR'S RESPONSIBILITY FOR DEFECTIVE WORK**		8
	3.1	Inspection; Testing; Correction of Defects	8
	3.2	Warranty of Work	8
	3.3	Owner's Right to Correct	8
ARTICLE IV	**FINANCIAL ASSURANCES**		8
	4.1	Bonds	8
	4.2	Insurance	9
	4.3	Indemnification	9
ARTICLE V	**PAYMENT**		9
	5.1	Contract Price	9
	5.2	Taxes and Benefits	9
	5.3	Progress Payments	9
	5.4	Final Acceptance and Final Payment	10
	5.5	Liens	10
	5.6	Deductions	11
ARTICLE VI	**DISPUTES AND REMEDIES**		11
	6.1	Dispute Resolution Procedure	11
	6.2	Contractor's Remedies	12
	6.3	Owner's Remedies	12

	6.4	Owner's Special Remedy for Delay	13
	6.5	Terminations and Suspensions Deemed for Convenience	13
ARTICLE VII	**LEGAL RELATIONSHIPS AND REQUIREMENTS**		13
	7.1	Binding Effect	13
	7.2	Relationship of the Parties	13
	7.3	No Collusion	13
	7.4	Assignment	13
	7.5	Confidential Information	14
	7.6	No Waiver	14
	7.7	No Third Party Beneficiaries	14
	7.8	Notices	14
	7.9	Governing Laws	15
	7.10	Changes in Laws	15
	7.11	Compliance with Laws and Grants	15
	7.12	Compliance with Patents	15
	7.13	Time	16
	7.14	Severability	16
	7.15	Entire Agreement	16
	7.16	Amendments	16

CONTRACTOR'S CERTIFICATION
ATTACHMENT A - SUPPLEMENTAL SCHEDULE OF CONTRACT TERMS
ATTACHMENT B - SPECIFICATIONS AND SPECIAL PROJECT REQUIREMENTS
ATTACHMENT C - LIST OF DRAWINGS
APPLICATION FOR PAYMENT FORM
SWORN STATEMENT TO OWNER FORM
CHANGE ORDER FORM
PERFORMANCE BOND
LABOR AND MATERIAL PAYMENT BOND
WAIVER OF LIEN TO DATE FORM AND EXHIBIT A
FINAL WAIVER OF LIEN FORM AND EXHIBIT A

VILLAGE OF NORTHBROOK
CONTRACT FOR
2025 LANDWEHR ROAD SIDEWALK IMPROVEMENTS
BETWEEN VILLAGE OF NORTHBROOK AND MILLER PIPELINE, LLC

In consideration of the mutual promises set forth below, the Village of Northbrook, c/o Village Hall, 1225 Cedar Lane, Northbrook, Illinois 60062, a home rule municipal corporation ("Owner"), and **Miller Pipeline, LLC, 301 Arthur Avenue, Mount Prospect, Illinois 60056, a Corporation** ("Contractor"), make this Contract as of the **25th of February, 2025**, and hereby agree as follows:

ARTICLE I

THE WORK

1.1 Performance of the Work

Contractor shall, at its sole cost and expense, provide, perform, and complete all of the following, all of which is herein referred to as the "Work":

A. Labor, Equipment, Materials, and Supplies. Provide, perform, and complete, in the manner described and specified in this Contract, all necessary work, labor, services, transportation, equipment, materials, apparatus, machinery, tools, fuels, gas, electric, water, waste disposal, information, data, and other means and items necessary to accomplish the Project at the Work Site, both as defined in Attachment A, in accordance with the specifications and special project requirements attached hereto as Attachment B, and the drawings identified in the list attached hereto as Attachment C.

B. Permits. Except as otherwise provided in Attachment A, procure and furnish all permits, licenses, and other governmental approvals and authorizations necessary in connection therewith.

C. Bonds and Insurance. Procure and furnish all Bonds and all certificates and policies of insurance specified in this Contract.

D. Taxes. Pay all applicable federal, state, and local taxes.

E. Miscellaneous. Do all other things required of Contractor by this Contract, including, without limitation, arranging for utility and other services needed for the Work and for testing, including the installation of temporary utility lines, wiring, switches, fixtures, hoses, connections, and meters, and providing sufficient sanitary conveniences and shelters to accommodate all workers and all personnel of Owner engaged in the Work.

F. Quality. Provide, perform and complete all of the foregoing in a proper and workmanlike manner, consistent with the highest standards of professional and construction practices and in full compliance with, and as required by or pursuant to, this Contract, and with the greatest economy, efficiency, and expedition consistent therewith, with only new, undamaged and first quality equipment, materials and supplies.

1.2 Commencement and Completion Dates

Contractor shall commence the Work not later than the "Commencement Date" set forth on Attachment A and shall diligently and continuously prosecute the Work at such a rate as will allow the Work to be fully provided, performed, and completed in full compliance with this Contract not later than the "Completion Date" set forth in Attachment A. The time of commencement, rate of progress, and time of completion are referred to in this Contract as the "Contract Time."

1.3 Required Submittals

A. Submittals Required. Contractor shall submit to Owner all documents, data, and information specifically required to be submitted by Contractor under this Contract and shall, in addition, submit to Owner all such drawings, specifications, descriptive information, and engineering documents, data, and information as may be required, or as may be requested by Owner, to show the details of the Work, including a complete description of all equipment, materials, and supplies to be provided under this Contract ("Required Submittals"). Such details shall include, but shall not be limited to, design data, structural and operating features, principal dimensions, space required or provided, clearances required or provided, type and brand of finish, and all similar matters, for all components of the Work.

B. Number and Format. Contractor shall provide five complete sets for each Required Submittal. All Required Submittals, except drawings, shall be prepared on white 8-1/2 inch by 11 inch

paper. Two blueline prints and one sepia transparency of each drawing shall be provided. All prints of drawings shall be folded to 8-1/2 inches by 11 inches, or less. All drawings shall be clearly marked in the lower right-hand corner with the names of Owner and Contractor.

C. Time of Submission and Owner's Review. All Required Submittals shall be provided to Owner no later than the time, if any, specified in this Contract for their submission or, if no time for submission is specified, in sufficient time, in Owner's sole opinion, to permit Owner to review the same prior to the commencement of the part of the Work to which they relate and prior to the purchase of any equipment, materials, or supplies that they describe. Owner shall have the right to require such corrections as may be necessary to make such submittals conform to this Contract. All such submittals shall, after final processing and review with no exception noted by Owner, become a part of this Contract. No Work related to any submittal shall be performed by Contractor until Owner has completed review of such submittal with no exception noted. Owner's review and stamping of any Required Submittal shall be for the sole purpose of examining the general management, design, and details of the proposed Work, shall not relieve Contractor of the entire responsibility for the performance of the Work in full compliance with, and as required by or pursuant to this Contract, and shall not be regarded as any assumption of risk or liability by Owner.

D. Responsibility for Delay. Contractor shall be responsible for any delay in the Work due to delay in providing Required Submittals conforming to this Contract.

1.4 Review and Interpretation of Contract Provisions

Contractor represents and warrants that it has carefully reviewed this Contract, including all of its Attachments and the drawings identified in Attachment C, all of which are by this reference incorporated into and made a part of this Contract. Contractor shall, at no increase in the Contract Price, provide workmanship, equipment, materials, and supplies that fully conform to this Contract. Whenever any equipment, materials or supplies are specified or described in this Contract by using the name or other identifying feature of a proprietary product or the name or other identifying feature of a particular manufacturer or vendor, the specific item mentioned shall be understood as establishing the type, function and quality desired. Other manufacturers' or vendors' products may be accepted, provided that the products proposed are equivalent in substance and function to those named as determined by Owner in its sole and absolute discretion.

Contractor shall promptly notify Owner of any discrepancy, error, omission, ambiguity, or conflict among any of the provisions of this Contract before proceeding with any Work affected thereby. If Contractor fails to give such notice to Owner, then the subsequent decision of Owner as to which provision of this Contract shall govern shall be final, and any corrective work required shall not entitle Contractor to any damages, to any compensation in excess of the Contract Price, or to any delay or extension of the Contract Time.

When the equipment, materials, or supplies furnished by Contractor cannot be installed as specified in this Contract, Contractor shall, without any increase in the Contract Price, make all modifications required to properly install the equipment, materials, or supplies. Any such modification shall be subject to the prior review and consent of Owner.

1.5 Conditions at the Work Site; Record Drawings

Contractor represents and warrants that it has had a sufficient opportunity to conduct a thorough investigation of the Work Site and the surrounding area and has completed such investigation to its satisfaction. Contractor shall have no claim for damages, for compensation in excess of the Contract Price, or for a delay or extension of the Contract Time based upon conditions found at, or in the vicinity of, the Work Site. When information pertaining to subsurface, underground or other concealed conditions, soils analysis, borings, test pits, utility locations or conditions, buried structures, condition of existing structures and other investigations is or has been provided by Owner, or is or has been otherwise made available to Contractor by Owner, such information is or has been provided or made available solely for the convenience of Contractor and is not part of this Contract. Owner assumes no responsibility whatever in respect to the sufficiency or accuracy of such information, and there is no guaranty or warranty, either expressed or implied, that the conditions indicated are representative of

those existing throughout the Work or the Work Site, or that the conditions indicated are representative of those existing at any particular location, or that the conditions indicated may not change, or that unanticipated conditions may not be present.

Contractor shall be solely responsible for locating all existing underground installations by prospecting no later than two workdays prior to any scheduled excavation or trenching, whichever is earlier. Contractor shall check all dimensions, elevations, and quantities indicated in this Contract within the same time period as set forth above for prospecting underground installations. Contractor shall lay out the Work in accordance with this Contract and shall establish and maintain such locations, lines and levels. Wherever pre-existing work is encountered, Contractor shall verify and be responsible for dimensions and location of such pre-existing work. Contractor shall notify Owner of any discrepancy between the dimensions, elevations and quantities indicated in this Contract and the conditions of the Work Site or any other errors, omissions or discrepancies which Contractor may discover during such inspections. Full instructions will be furnished by Owner should such error, omission, or discrepancy be discovered, and Contractor shall carry out such instructions as if originally specified and without any increase in Contract Price.

Before Final Acceptance of the Work, Contractor shall submit to Owner two sets of Drawings of Record, unless a greater number is specified elsewhere in this Contract, indicating all field deviations from Attachment B or the drawings identified in Attachment C.

1.6 Technical Ability to Perform

Contractor represents and warrants that it is sufficiently experienced and competent, and has the necessary capital, facilities, plant, organization, and staff, to provide, perform and complete the Work in full compliance with, and as required by or pursuant to, this Contract.

1.7 Financial Ability to Perform

Contractor represents and warrants that it is financially solvent, and Contractor has the financial resources necessary to provide, perform and complete the Work in full compliance with, and as required by or pursuant to, this Contract.

1.8 Time

Contractor represents and warrants that it is ready, willing, able and prepared to begin the Work on the Commencement Date and that the Contract Time is sufficient time to permit completion of the Work in full compliance with, and as required by or pursuant to, this Contract for the Contract Price, all with due regard to all natural and man-made conditions that may affect the Work or the Work Site and all difficulties, hindrances, and delays that may be incident to the Work.

1.9 Safety at the Work Site

Contractor shall be solely and completely responsible for providing and maintaining safe conditions at the Work Site, including the safety of all persons and property during performance of the Work. This requirement shall apply continuously and shall not be limited to normal working hours. Contractor shall take all safety precautions as shall be necessary to comply with all applicable laws and to prevent injury to persons and damage to property.

Contractor shall conduct all of its operations without interruption or interference with vehicular and pedestrian traffic on public and private rights-of-way, unless it has obtained permits therefor from the proper authorities. If any public or private right-of-way shall be rendered unsafe by Contractor's operations, Contractor shall make such repairs or provide such temporary ways or guards as shall be acceptable to the proper authorities.

1.10 Cleanliness of the Work Site and Environs

Contractor shall keep the Work Site and adjacent areas clean at all times during performance of the Work and shall, upon completion of the Work, leave the Work Site and adjacent areas in a clean and orderly condition.

1.11 Damage to the Work, the Work Site, and Other Property

The Work and everything pertaining thereto shall be provided, performed, completed, and maintained at the sole risk and cost of Contractor from the Commencement Date until Final Payment. Contractor shall be fully responsible for the protection of all public and private property and all persons. Without limiting the foregoing, Contractor shall, at its own cost and expense, provide all permanent and temporary shoring, anchoring and bracing required by the nature of the Work in order to make all parts absolutely stable and rigid, even when such shoring, anchoring and bracing is not explicitly specified, and support and protect all buildings, bridges, roadways, conduits, wires, water pipes, gas pipes, sewers, pavements, curbs, sidewalks, fixtures and landscaping of all kinds and all other public or private property that may be encountered or endangered in providing, performing and completing the Work. Contractor shall have no claim against Owner because of any damage or loss to the Work or to Contractor's equipment, materials, or supplies from any cause whatsoever, including damage or loss due to simultaneous work by others. Contractor shall, promptly and without charge to Owner, repair or replace, to the satisfaction of Owner, any damage done to, and any loss suffered by, the Work and any damage done to, and any loss suffered by, the Work Site or other property as a result of the Work. Notwithstanding any other provision of this Contract, Contractor's obligations under this Section shall exist without regard to, and shall not be construed to be waived by, the availability or unavailability of any insurance, either of Owner or Contractor, to indemnify, hold harmless, or reimburse Contractor for the cost of any repair or replacement work required by this Section.

1.12 Subcontractors and Suppliers

A. Approval and Use of Subcontractors and Suppliers. Contractor shall perform the Work with its own personnel and under the management, supervision, and control of its own organization unless otherwise approved by Owner in writing. All subcontractors, suppliers, and subcontracts used by Contractor shall be acceptable to, and approved in advance by, Owner. Owner's approval of any subcontractor, supplier, and subcontract shall not relieve Contractor of full responsibility and liability for the provision, performance, and completion of the Work in full compliance with, and as required by or pursuant to, this Contract. All Work performed under any subcontract shall be subject to all of the provisions of this Contract in the same manner as if performed by employees of Contractor. Every reference in this Contract to "Contractor" shall be deemed also to refer to all subcontractors and suppliers of Contractor. Every subcontract shall include a provision binding the subcontractor or supplier to all provisions of this Contract.

B. Removal of Subcontractors and Suppliers. If any subcontractor or supplier fails to perform the part of the Work undertaken by it in a manner satisfactory to Owner, Contractor shall immediately upon notice from Owner terminate such subcontractor or supplier. Contractor shall have no claim for damages, for compensation in excess of the Contract Price, or for a delay or extension of the Contract Time as a result of any such termination.

1.13 Simultaneous Work By Others

Owner shall have the right to perform or have performed such other work as Owner may desire in, about, or near the Work Site during the performance of the Work by Contractor. Contractor shall make every reasonable effort to perform the Work in such manner as to enable both the Work and such other work to be completed without hindrance or interference from each other. Contractor shall afford Owner and other contractors reasonable opportunity for the execution of such other work and shall properly coordinate the Work with such other work.

1.14 Occupancy Prior to Final Payment

Owner shall have the right, at its election, to occupy, use, or place in service any part of the Work prior to Final Payment. Such occupancy, use, or placement in service shall be conducted in such manner as not to damage any of the Work or to unreasonably interfere with the progress of the Work. No such

occupancy, use, or placement in service shall be construed as an acceptance of any of the Work or a release or satisfaction of Contractor's duty to insure and protect the Work, nor shall it, unless conducted in an unreasonable manner, be considered as an interference with Contractor's provision, performance, or completion of the Work.

1.15 Owner's Right to Terminate or Suspend Work for Convenience

A. Termination or Suspension for Convenience. Owner shall have the right, for its convenience, to terminate or suspend the Work in whole or in part at any time by written notice to Contractor. Every such notice shall state the extent and effective date of such termination or suspension. On such effective date, Contractor shall, as and to the extent directed, stop Work under this Contract, cease all placement of further orders or subcontracts, terminate or suspend Work under existing orders and subcontracts, cancel any outstanding orders or subcontracts that may be cancelled, and take any action necessary to protect any property in its possession in which Owner has or may acquire any interest and to dispose of such property in such manner as may be directed by Owner.

B. Payment for Completed Work. In the event of any termination pursuant to Subsection 1.15A above, Owner shall pay Contractor (1) such direct costs, excluding overhead, as Contractor shall have paid or incurred for all Work done in compliance with, and as required by or pursuant to, this Contract up to the effective date of termination together with ten percent of such costs for overhead and profit; and (2) such other costs pertaining to the Work, exclusive of overhead and profit, as Contractor may have reasonably and necessarily incurred as the result of such termination. Any such payment shall be offset by any prior payment or payments and shall be subject to Owner's rights to withhold and deduct as provided in this Contract.

ARTICLE II

CHANGES AND DELAYS

2.1 Changes

Owner shall have the right, by written order executed by Owner, to make changes in the Contract, the Work, the Work Site, and the Contract Time ("Change Order"). If any Change Order causes an increase or decrease in the amount of the Work, an equitable adjustment in the Contract Price or Contract Time may be made. All claims by Contractor for an equitable adjustment in either the Contract Price or the Contract Time shall be made within two business days following receipt of such Change Order, and shall, if not made prior to such time, be conclusively deemed to have been waived. No decrease in the amount of the Work caused by any Change Order shall entitle Contractor to make any claim for damages, anticipated profits, or other compensation. Any Change Order that authorizes or necessitates an increase of fifty per cent or more in (a) the original Contract Price or (b) the original prices of any subcontractor under this Contract, shall be subject to bidding in the same manner as the original Contract or subcontract was bid.

2.2 Delays

A. Extensions for Unavoidable Delays. For any delay that may result from causes that could not be avoided or controlled by Contractor, Contractor shall, upon timely written application, be entitled to issuance of a Change Order providing for an extension of the Contract Time for a period of time equal to the delay resulting from such unavoidable cause. No extension of the Contract Time shall be allowed for any other delay in completion of the Work.

B. No Compensation for Delays. No payment, compensation, damages, or adjustment of any kind, other than the extension of the Contract Time provided in Subsection 2.2A above, shall be made to, or claimed by, Contractor because of hindrances or delays from any cause in the commencement, prosecution, or completion of the Work, whether caused by Owner or any other party and whether avoidable or unavoidable.

ARTICLE III

CONTRACTOR'S RESPONSIBILITY FOR DEFECTIVE WORK

3.1 Inspection; Testing; Correction of Defects

A. Inspection. Until Final Payment, all parts of the Work shall be subject to inspection and testing by Owner or its designated representatives. Contractor shall furnish, at its own expense, all reasonable access, assistance, and facilities required by Owner for such inspection and testing.

B. Re-inspection. Re-inspection and re-testing of any Work may be ordered by Owner at any time, and, if so ordered, any covered or closed Work shall be uncovered or opened by Contractor. If the Work is found to be in full compliance with this Contract, then Owner shall pay the cost of uncovering, opening, re-inspecting, or re-testing, as the case may be. If such Work is not in full compliance with this Contract, then Contractor shall pay such cost.

C. Correction. Until Final Payment, Contractor shall, promptly and without charge, repair, correct, or replace all or any part of the Work that is defective, damaged, flawed, or unsuitable or that in any way fails to conform strictly to the requirements of this Contract.

3.2 Warranty of Work

A. Scope of Warranty. Contractor warrants that the Work and all of its components shall be free from defects and flaws in design, workmanship, and materials; shall strictly conform to the requirements of this Contract; and shall be fit, sufficient and suitable for the purposes expressed in, or reasonably inferred from, this Contract. The warranty herein expressed shall be in addition to any other warranties expressed in this Contract, or expressed or implied by law, which are hereby reserved unto Owner.

B. Length of Warranty; Repairs; Extension of Warranty. Contractor shall, promptly and without charge, correct any failure to fulfill the above warranty that may be discovered or develop at any time within one year after Final Payment or such longer period as may be prescribed in Attachment B or Attachment D to this Contract or by law. The above warranty shall be extended automatically to cover all repaired and replacement parts and labor provided or performed under such warranty and Contractor's obligation to correct Work shall be extended for a period of one year from the date of such repair or replacement. The time period established in this Subsection 3.2B relates only to the specific obligation of Contractor to correct Work and shall not be construed to establish a period of limitation with respect to other obligations that Contractor has under this Contract.

C. Subcontractor and Supplier Warranties. Whenever Attachment B or Attachment D requires a subcontractor or supplier to provide a guaranty or warranty, Contractor shall be solely responsible for obtaining said guaranty or warranty in form satisfactory to Owner and assigning said warranty or guaranty to Owner. Acceptance of any assigned warranties or guaranties by Owner shall be a pre-condition to Final Payment and shall not relieve Contractor of any of its guaranty or warranty obligations under this Contract.

3.3 Owner's Right to Correct

If, within two business days after Owner gives Contractor notice of any defect, damage, flaw, unsuitability, nonconformity, or failure to meet warranty subject to correction by Contractor pursuant to Section 3.1 or Section 3.2 of this Contract, Contractor neglects to make, or undertake with due diligence to make, the necessary corrections, then Owner shall be entitled to make, either with its own forces or with Contract forces, the corrections and to recover from Contractor all resulting costs, expenses, losses, or damages, including attorneys' fees and administrative expenses.

ARTICLE IV

FINANCIAL ASSURANCES

4.1 Bonds

Contemporaneous with Contractor's execution of this Contract, Contractor shall provide a Performance Bond and a Labor and Material Payment Bond, on forms provided by Owner, from a surety company licensed to do business in the State of Illinois with a general rating of A minus and a financial size

category of Class X or better in Best's Insurance Guide, each in the penal sum of the Contract Price ("Bonds"). Contractor shall, at all times while providing, performing, or completing the Work, including, without limitation, at all times while correcting any failure to meet warranty pursuant to Section 3.2 of this Contract, maintain and keep in force, at Contractor's expense, the Bonds required hereunder.

4.2 Insurance

Contemporaneous with Contractor's execution of this Contract, Contractor shall provide certificates and policies of insurance evidencing the minimum insurance coverages and limits set forth in Attachment A. For good cause shown, Owner may extend the time for submission of the required policies of insurance upon such terms, and with such assurances of complete and prompt performance, as Owner may impose in the exercise of its sole discretion, however the Work may not begin until such policies are submitted. Such policies shall be in a form, and from companies, acceptable to Owner and from companies with a general rating of A minus, and a financial size category of Class X or better, in Best's Insurance Guide. Such insurance shall provide that no change, modification in, or cancellation of any insurance shall become effective until the expiration of 30 days after written notice thereof shall have been given by the insurance company to Owner. Contractor shall, at all times while providing, performing, or completing the Work, including, without limitation, at all times while correcting any failure to meet warranty pursuant to Section 3.2 of this Contract, maintain and keep in force, at Contractor's expense, the minimum insurance coverages and limits set forth in Attachment A.

4.3 Indemnification

Contractor shall indemnify, save harmless, and defend Owner against any and all lawsuits, claims, demands, damages, liabilities, losses, and expenses, including attorneys' fees and administrative expenses, that may arise, or be alleged to have arisen, out of or in connection with Contractor's performance of, or failure to perform, the Work or any part thereof, whether or not due or claimed to be due in whole or in part to the active, passive, or concurrent negligence or fault of Contractor, except to the extent caused by the sole negligence of Owner. The provision of insurance as provided in this Contract shall not be a limit on the Contractor's obligation under this Section 4.3.

ARTICLE V
PAYMENT

5.1 Contract Price

Owner shall pay to Contractor, in accordance with and subject to the terms and conditions set forth in this Article V and Attachment A, and Contractor shall accept in full satisfaction for providing, performing, and completing the Work, the amount or amounts set forth in Attachment A (the "Contract Price"), subject to any additions, deductions, or withholdings provided for in this Contract.

5.2 Taxes and Benefits

Owner is exempt from and shall not be responsible to pay, or reimburse Contractor for, any state or local sales, use, or excise taxes. The Contract Price includes all other applicable federal, state, and local taxes of every kind and nature applicable to the Work as well as all taxes, contributions, and premiums for unemployment insurance, old age or retirement benefits, pensions, annuities, or other similar benefits. All claim or right to claim additional compensation by reason of the payment of any such tax, contribution, or premium is hereby waived and released by Contractor.

5.3 Progress Payments

A. Payment in Installments. The Contract Price shall be paid in monthly installments in the manner set forth in Attachment A ("Progress Payments").

B. Pay Requests. Contractor shall, as a condition precedent to its right to receive each Progress Payment, submit to Owner a pay request in the form provided by Owner ("Pay Request"). The first Pay Request shall be submitted not sooner than 30 days following commencement of the Work. Owner may, by written notice to Contractor, designate a specific day of each month on or before which Pay Requests must be submitted. Each Pay Request shall include (a) Contractor's certification of the value of, and partial or final waivers of lien covering, all Work for which

payment is then requested and (b) Contractor's certification that all prior Progress Payments have been properly applied to the payment or reimbursement of the costs with respect to which they were paid.

C. Certified Payroll Records. Contractor shall submit to Owner, on a monthly basis, the certified payroll records required by Section 5 of the Prevailing Wage Act, as amended, 820 ILSC 130/5.

D. Work Entire. This Contract and the Work are entire and the Work as a whole is of the essence of this Contract. Notwithstanding any other provision of this Contract, each and every part of this Contract and of the Work are interdependent and common to one another and to Owner's obligation to pay all or any part of the Contract Price or any other consideration for the Work. Any and all Progress Payments made pursuant to this Article are provided merely for the convenience of Contractor and for no other purpose.

5.4 Final Acceptance and Final Payment

A. Notice of Completion. When the Work has been completed and is ready in all respects for acceptance by Owner, Contractor shall notify Owner and request a final inspection ("Notice of Completion"). Contractor's Notice of Completion shall be given sufficiently in advance of the Completion Date to allow for scheduling of the final inspection and for completion or correction before the Completion Date of any items identified by such inspection as being defective, damaged, flawed, unsuitable, nonconforming, incomplete, or otherwise not in full compliance with, or as required by or pursuant to, this Contract ("Punch List Work").

B. Punch List and Final Acceptance. The Work shall be finally accepted when, and only when, the whole and all parts thereof shall have been completed to the satisfaction of Owner in full compliance with, and as required by or pursuant to, this Contract. Upon receipt of Contractor's Notice of Completion, Owner shall make a review of the Work and notify Contractor in writing of all Punch List Work, if any, to be completed or corrected. Following Contractor's completion or correction of all Punch List Work, Owner shall make another review of the Work and prepare and deliver to Contractor either a written notice of additional Punch List Work to be completed or corrected or a written notice of final acceptance of the Work ("Final Acceptance").

C. Final Payment. As soon as practicable after Final Acceptance, Contractor shall submit to Owner a properly completed final Pay Request in the form provided by Owner ("Final Pay Request"). Owner shall pay to Contractor the balance of the Contract Price, after deducting therefrom all charges against Contractor as provided for in this Contract ("Final Payment"). Final Payment shall be made not later than 60 days after Owner approves the Final Pay Request. The acceptance by Contractor of Final Payment shall operate as a full and complete release of Owner of and from any and all lawsuits, claims, demands, damages, liabilities, losses, and expenses of, by, or to Contractor for anything done, furnished for, arising out of, relating to, or in connection with the Work or for or on account of any act or neglect of Owner arising out of, relating to, or in connection with the Work.

5.5 Liens

A. Title. Nothing in this Contract shall be construed as vesting in Contractor any right of property in any equipment, materials, supplies, and other items provided under this Contract after they have been installed in, incorporated into, attached to, or affixed to, the Work or the Work Site. All such equipment, materials, supplies, and other items shall, upon being so installed, incorporated, attached or affixed, become the property of Owner, but such title shall not release Contractor from its duty to insure and protect the Work in accordance with the requirements of this Contract.

B. Waivers of Lien. Contractor shall, from time to time at Owner's request and in any event prior to Final Payment, furnish to Owner such receipts, releases, affidavits, certificates, and other evidence as may be necessary to establish, to the reasonable satisfaction of Owner, that no lien against the Work or the public funds held by Owner exists in favor of any person whatsoever for or by reason of any equipment, material, supplies, or other item furnished, labor performed, or other thing done in connection with the Work or this Contract ("Lien") and that no right to file any Lien exists in favor of any person whatsoever.

C. Removal of Liens. If at any time any notice of any Lien is filed, then Contractor shall, promptly and without charge, discharge, remove, or otherwise dispose of such Lien. Until such discharge, removal, or disposition, Owner shall have the right to retain from any money payable hereunder an amount that Owner, in its sole judgment, deems necessary to satisfy such Lien and to pay the costs and expenses, including attorneys' fees and administrative expenses, of any actions brought in connection therewith or by reason thereof.

D. Protection of Owner Only. This Section shall not operate to relieve Contractor's surety or sureties from any of their obligations under the Bonds, nor shall it be deemed to vest any right, interest, or entitlement in any subcontractor or supplier. Owner's retention of funds pursuant to this Section shall be deemed solely for the protection of its own interests pending removal of such Liens by Contractor, and Owner shall have no obligation to apply such funds to such removal but may, nevertheless, do so where Owner's interests would thereby be served.

5.6 Deductions

A. Owner's Right to Withhold. Notwithstanding any other provision of this Contract and without prejudice to any of Owner's other rights or remedies, Owner shall have the right at any time or times, whether before or after approval of any Pay Request, to deduct and withhold from any Progress or Final Payment that may be or become due under this Contract such amount as may reasonably appear necessary to compensate Owner for any actual or prospective loss due to: (1) Work that is defective, damaged, flawed, unsuitable, nonconforming, or incomplete; (2) damage for which Contractor is liable under this Contract; (3) state or local sales, use, or excise taxes from which Owner is exempt; (4) Liens or claims of Lien regardless of merit; (5) claims of subcontractors, suppliers, or other persons regardless of merit; (6) delay in the progress or completion of the Work; (7) inability of Contractor to complete the Work; (8) failure of Contractor to properly complete or document any Pay Request; (9) any other failure of Contractor to perform any of its obligations under this Contract; or (10) the cost to Owner, including attorneys' fees and administrative costs, of correcting any of the aforesaid matters or exercising any one or more of Owner's remedies set forth in Section 6.3 of this Contract.

B. Use of Withheld Funds. Owner shall be entitled to retain any and all amounts withheld pursuant to Subsection 5.6 A above until Contractor shall have either performed the obligations in question or furnished security for such performance satisfactory to Owner. Owner shall be entitled to apply any money withheld or any other money due Contractor under this Contract to reimburse itself for any and all costs, expenses, losses, damages, liabilities, suits, judgments, awards, attorneys' fees and administrative expenses incurred, suffered, or sustained by Owner and chargeable to Contractor under this Contract.

ARTICLE VI

DISPUTES AND REMEDIES

6.1 Dispute Resolution Procedure

A. Notice of Disputes and Objections. If Contractor disputes or objects to any requirement, direction, instruction, interpretation, determination, or decision of Owner, Contractor may notify Owner in writing of its dispute or objection and of the amount of any equitable adjustment to the Contract Price or Contract Time to which Contractor claims it will be entitled as a result thereof; provided, however, that Contractor shall, nevertheless, proceed without delay to perform the Work as required, directed, instructed, interpreted, determined, or decided by Owner, without regard to such dispute or objection. Unless Contractor so notifies Owner within two business days after receipt of such requirement, direction, instruction, interpretation, determination, or decision, Contractor shall be conclusively deemed to have waived all such disputes or objections and all claims based thereon.

B. Negotiation of Disputes and Objections. To avoid and settle without litigation any such dispute or objection, Owner and Contractor agree to engage in good faith negotiations. Within three business days after Owner's receipt of Contractor's written notice of dispute or objection, a conference between Owner and Contractor shall be held to resolve the dispute. Within three business days after the end of the conference, Owner shall render its final decision, in writing, to

Contractor. If Contractor objects to the final decision of Owner, then it shall, within three business days, give Owner notice thereof and, in such notice, shall state its final demand for settlement of the dispute. Unless Contractor so notifies Owner, Contractor shall be conclusively deemed (1) to have agreed to and accepted Owner's final decision and (2) to have waived all claims based on such final decision.

6.2 Contractor's Remedies

If Owner fails or refuses to satisfy a final demand made by Contractor pursuant to Section 6.1 of this Contract, or to otherwise resolve the dispute which is the subject of such demand to the satisfaction of Contractor, within ten days following receipt of such demand, then Contractor shall be entitled to pursue such remedies, not inconsistent with the provisions of this Contract, as it may have in law or equity.

6.3 Owner's Remedies

If it should appear at any time prior to Final Payment that Contractor has failed or refused to prosecute, or has delayed in the prosecution of, the Work with diligence at a rate that assures completion of the Work in full compliance with the requirements of this Contract on or before the Completion Date, or has attempted to assign this Contract or Contractor's rights under this Contract, either in whole or in part, or has falsely made any representation or warranty in this Contract, or has otherwise failed, refused, or delayed to perform or satisfy any other requirement of this Contract or has failed to pay its debts as they come due ("Event of Default"), and has failed to cure any such Event of Default within five business days after Contractor's receipt of written notice of such Event of Default, then Owner shall have the right, at its election and without prejudice to any other remedies provided by law or equity, to pursue any one or more of the following remedies:

A. Owner may require Contractor, within such reasonable time as may be fixed by Owner, to complete or correct all or any part of the Work that is defective, damaged, flawed, unsuitable, nonconforming, or incomplete; to remove from the Work Site any such Work; to accelerate all or any part of the Work; and to take any or all other action necessary to bring Contractor and the Work into strict compliance with this Contract.

B. Owner may perform or have performed all Work necessary for the accomplishment of the results stated in Paragraph 1 above and withhold or recover from Contractor all the cost and expense, including attorneys' fees and administrative costs, incurred by Owner in connection therewith.

C. Owner may accept the defective, damaged, flawed, unsuitable, nonconforming, incomplete, or dilatory Work or part thereof and make an equitable reduction in the Contract Price.

D. Owner may terminate this Contract without liability for further payment of amounts due or to become due under this Contract.

E. Owner may, without terminating this Contract, terminate Contractor's rights under this Contract and, for the purpose of completing or correcting the Work, evict Contractor and take possession of all equipment, materials, supplies, tools, appliances, plans, specifications, schedules, manuals, drawings, and other papers relating to the Work, whether at the Work Site or elsewhere, and either complete or correct the Work with its own forces or contracted forces, all at Contractor's expense.

F. Upon termination of this Contract or of Contractor's rights under this Contract, and at Owner's option exercised in writing, any or all subcontracts and supplier contracts of Contractor shall be deemed to be assigned to Owner without any further action being required, but Owner shall not thereby assume any obligation for payments due under such subcontracts and supplier contracts for any Work provided or performed prior to such assignment.

G. Owner may withhold from any Progress Payment or Final Payment, whether or not previously approved, or may recover from Contractor, any and all costs, including attorneys' fees and administrative expenses, incurred by Owner as the result of any Event of Default or as a result of actions taken by Owner in response to any Event of Default.

H. Owner may recover any damages suffered by Owner.

6.4 Owner's Special Remedy for Delay

If the Work is not completed by Contractor, in full compliance with, and as required by or pursuant to, this Contract, within the Contract Time as such time may be extended by Change Order, then Owner may invoke its remedies under Section 6.3 of this Contract or may, in the exercise of its sole and absolute discretion, permit Contractor to complete the Work but charge to Contractor, and deduct from any Progress or Final Payments, whether or not previously approved, administrative expenses and costs for each day completion of the Work is delayed beyond the Completion Date, computed on the basis of the "Per Diem Administrative Charge" set forth in Attachment A, as well as any additional damages caused by such delay.

6.5 Terminations and Suspensions Deemed for Convenience

Any termination or suspension of Contractor's rights under this Contract for an alleged default that is ultimately held unjustified shall automatically be deemed to be a termination or suspension for the convenience of Owner under Section 1.15 of this Contract.

ARTICLE VII

LEGAL RELATIONSHIPS AND REQUIREMENTS

7.1 Binding Effect

This Contract shall be binding upon Owner and Contractor and upon their respective heirs, executors, administrators, personal representatives, and permitted successors and assigns. Every reference in this Contract to a party shall also be deemed to be a reference to the authorized officers, employees, agents, and representatives of such party.

7.2 Relationship of the Parties

Contractor shall act as an independent contractor in providing and performing the Work. Nothing in, nor done pursuant to, this Contract shall be construed (1) to create the relationship of principal and agent, partners, or joint venturers between Owner and Contractor or (2) except as provided in Paragraph 6.3(6) above, to create any relationship between Owner and any subcontractor or supplier of Contractor.

7.3 No Collusion

Contractor hereby represents that the only persons, firms, or corporations interested in this Contract as principals are those disclosed to Owner prior to the execution of this Contract, and that this Contract is made without collusion with any other person, firm, or corporation. If at any time it shall be found that Contractor has, in procuring this Contract, colluded with any other person, firm, or corporation, then Contractor shall be liable to Owner for all loss or damage that Owner may suffer thereby, and this Contract shall, at Owner's option, be null and void.

7.4 Assignment

Contractor shall not (1) assign this Contract in whole or in part, (2) assign any of Contractor's rights or obligations under this Contract, or (3) assign any payment due or to become due under this Contract without the prior express written approval of Owner, which approval may be withheld in the sole and unfettered discretion of Owner; provided, however, that Owner's prior written approval shall not be required for assignments of accounts as defined in the Illinois Commercial Code, if to do so would violate Section 9-318 of the Illinois Commercial Code, 810 ILCS 5/9-318. Owner may assign this Contract, in whole or in part, or any or all of its rights or obligations under this Contract, without the consent of Contractor.

7.5 **Confidential Information**

All information supplied by Owner to Contractor for or in connection with this Contract or the Work shall be held confidential by Contractor and shall not, without the prior express written consent of Owner, be used for any purpose other than performance of the Work.

7.6 **No Waiver**

No examination, inspection, investigation, test, measurement, review, determination, decision, certificate, or approval by Owner, nor any order by Owner for the payment of money, nor any payment for, or use, occupancy, possession, or acceptance of, the whole or any part of the Work by Owner, nor any extension of time granted by Owner, nor any delay by Owner in exercising any right under this Contract, nor any other act or omission of Owner shall constitute or be deemed to be an acceptance of any defective, damaged, flawed, unsuitable, nonconforming, or incomplete Work, equipment, materials, or supplies, nor operate to waive or otherwise diminish the effect of any warranty or representation made by Contractor; or of any requirement or provision of this Contract; or of any remedy, power, or right of Owner.

7.7 **No Third Party Beneficiaries**

No claim as a third party beneficiary under this Contract by any person, firm, or corporation other than Contractor shall be made or be valid against Owner.

7.8 **Notices**

All notices required or permitted to be given under this Contract shall be in writing and shall be deemed received by the addressee thereof when delivered in person on a business day at the address set forth below or on the third business day after being deposited in any main or branch United States post office, for delivery at the address set forth below by properly addressed, postage prepaid, certified or registered mail, return receipt requested.

Notices and communications to Owner shall be addressed to, and delivered at, the following address:

Village of Northbrook
c/o Village Hall
1225 Cedar Lane
Northbrook, Illinois 60062
Attention: Cara L. Pavlicek

with a copy to:

Elrod Friedman LLP
325 N LaSalle, Suite 450
Chicago, Illinois 60654
Attention: Steve Elrod

Notices and communications to Contractor shall be addressed to, and delivered at, the following address:

CONTRACTOR NAME AND ADDRESS **Miller Pipeline, LLC**
301 Arthur Avenue
Mount Prospect, Illinois 60056

Attention: **Lauren Kucik**

The foregoing shall not be deemed to preclude the use of other non-oral means of notification or to invalidate any notice properly given by any such other non-oral means.

By notice complying with the requirements of this Section, Owner and Contractor each shall have the right to change the address or addressee or both for all future notices to it, but no notice of a change of address shall be effective until actually received.

7.9 Governing Laws

This Contract and the rights of Owner and Contractor under this Contract shall be interpreted according to the internal laws, but not the conflict of laws rules, of the State of Illinois.

7.10 Changes in Laws

Unless otherwise explicitly provided in this Contract, any reference to laws shall include such laws as they may be amended or modified from time to time.

7.11 Compliance with Laws and Grants

Contractor shall give all notices, pay all fees, and take all other action that may be necessary to ensure that the Work is provided, performed, and completed in accordance with all required governmental permits, licenses or other approvals and authorizations that may be required in connection with providing, performing, and completing the Work, and with all applicable statutes, ordinances, rules, and regulations, including without limitation the Prevailing Wage Act, 820 ILCS 130/0.01 et seq. The Illinois Department of Labor publishes the prevailing wage rates on its website at http://labor.illinois.gov/. The Department revises the prevailing wage rates and the Contractor/Subcontractor has an obligation to check the Department's website for revisions to prevailing wage rates. For information regarding current prevailing wage rates, Contractor shall refer to the Illinois Department of Labor's website. Contractor and any subcontractors rendering services under this contract must comply with all requirements of the Act, including but not limited to, all wage requirements and notice and record keeping duties; any other prevailing wage laws; the Fair Labor Standards Act; any statutes regarding qualification to do business; any statutes requiring preference to laborers of specified classes, including, without limitation, the Employment of Illinois Workers on Public Works Act, 30 ILCS 570/0.01 et seq. ; the Illinois Steel Products Procurement Act, 30 ILCS 565/1 et seq.; any statutes prohibiting discrimination because of, or requiring affirmative action based on, race, creed, color, national origin, age, sex, or other prohibited classification, including, without limitation, the Americans with Disabilities Act of 1990, 42 U.S.C. sec. 12101 et seq., the Illinois Human Rights Act, 775 ILCS 5/1-101 et seq. and the Discrimination in Public Contracts Act, 775 ILCS 10/1 et seq.; and any statutes regarding safety or the performance of the Work, including the Illinois Structural Work Act, the Illinois Underground Utility Facilities Damage Prevention Act, and the Occupational Safety and Health Act. Contractor shall also comply with all conditions of any federal, state, or local grant received by Owner or Contractor with respect to this Contract or the Work.

Contractor shall be solely liable for any fines or civil penalties that are imposed by any governmental or quasi-governmental agency or body that may arise, or be alleged to have arisen, out of or in connection with Contractor's, or its subcontractors' or suppliers', performance of, or failure to perform, the Work or any part thereof.

Contractor and its employees, agents, and subcontractors will comply with the Owner's Standard Operating Procedure NO. 11-057 "No Weapons" effective May 13, 2014 ("SOP") at all times during the performance of the Work.

Every provision of law required by law to be inserted into this Contract shall be deemed to be inserted herein.

7.12 Compliance with Patents

A. Assumption of Costs, Royalties, and Fees Contractor shall pay or cause to be paid all costs, royalties, and fees arising from the use on, or the incorporation into, the Work, of patented equipment, materials, supplies, tools, appliances, devices, processes, or inventions.

B. Effect of Contractor Being Enjoined Should Contractor be enjoined from furnishing or using any equipment, materials, supplies, tools, appliances, devices, processes, or inventions supplied or required to be supplied or used under this Contract, Contractor shall promptly offer substitute equipment, materials, supplies, tools, appliances, devices, processes, or inventions in lieu thereof, of equal efficiency, quality, suitability, and market value, for review by Owner. If Owner should disapprove the offered substitutes and should elect, in lieu of a substitution, to have supplied, and to retain and use, any such equipment, materials, supplies, tools, appliances, devices, processes, or inventions as may by this Contract be required to be supplied, Contractor

shall pay such royalties and secure such valid licenses as may be requisite and necessary for Owner to use such equipment, materials, supplies, tools, appliances, devices, processes, or inventions without being disturbed or in any way interfered with by any proceeding in law or equity on account thereof. Should Contractor neglect or refuse to make any approved substitution promptly, or to pay such royalties and secure such licenses as may be necessary, then Owner shall have the right to make such substitution, or Owner may pay such royalties and secure such licenses and charge the cost thereof against any money due Contractor from Owner or recover the amount thereof from Contractor and its surety or sureties notwithstanding that Final Payment may have been made.

7.13 Time

The Contract Time is of the essence of this Contract. Except where otherwise stated, references in this Contract to days shall be construed to refer to calendar days.

7.14 Severability

The provisions of this Contract shall be interpreted when possible to sustain their legality and enforceability as a whole. In the event any provision of this Contract shall be held invalid, illegal, or unenforceable by a court of competent jurisdiction, in whole or in part, neither the validity of the remaining part of such provision, nor the validity of any other provisions of this Contract shall be in any way affected thereby.

7.15 Entire Agreement

This Contract sets forth the entire agreement of Owner and Contractor with respect to the accomplishment of the Work and the payment of the Contract Price therefor, and there are no other understandings or agreements, oral or written, between Owner and Contractor with respect to the Work and the compensation therefor.

Nothing in this Contract shall be construed to waive or limit any aspect of Owner's lawful authority to regulate the activities of Contractor, its subcontractors' or any other person or to regulate the Work, the Work Site or any other matter falling within its lawful regulatory jurisdiction and powers. No review, inspection, test, audit, measurement, order, determination, decision, disapproval, approval, payment for or use or acceptance of the Work, or any other act or omission of Owner shall imply, create any interest in, be deemed to be the issuance of or require Owner to issue any license or permit to Contractor or any subcontractor.

7.16 Amendments

No modification, addition, deletion, revision, alteration or other change to this Contract shall be effective unless and until such change is reduced to writing and executed and delivered by Owner and Contractor.

[*Signatures on following page*]

VILLAGE OF NORTHBROOK
CONTRACT FOR
2025 LANDWEHR ROAD SIDEWALK IMPROVEMENTS
BETWEEN VILLAGE OF NORTHBROOK AND MILLER PIPELINE, LLC

IN WITNESS WHEREOF, Owner and Contractor have caused this Contract to be executed in five original counterparts as of the day and year first written above.

(SEAL)

Attest/Witness:

By: _____
A.C. Buehler III
Title: Village Clerk

VILLAGE OF NORTHBROOK

By: _____
Cara L. Pavlicek
Title: Village Manager

Attest/Witness:

By: Lauren Kucik
Title: contract manager

MILLER PIPELINE, LLC

By: D Fox
Title: VP, Field Finance

SEE GENERAL INSTRUCTIONS TO BIDDERS, SECTION 7,
FOR SIGNATURE REQUIREMENTS

VILLAGE OF NORTHBROOK
CONTRACT FOR
2025 LANDWEHR ROAD SIDEWALK IMPROVEMENTS
BETWEEN VILLAGE OF NORTHBROOK AND MILLER PIPELINE, LLC
CONTRACTOR'S CERTIFICATION

STATE OF ILLINOIS Wisconsin)
) SS
COUNTY OF Waukesha)

CONTRACTOR'S CERTIFICATION

Dan Fox (Contractor's Executing Officer), being first duly sworn on oath, deposes and states that all statements herein made are made on behalf of Contractor, that this deponent is authorized to make them, and that the statements contained herein are true and correct.

Contractor deposes, states, and certifies that Contractor is not barred from contracting with a unit of state or local government as a result of (i) a delinquency in the payment of any tax administered by the Illinois Department of Revenue unless Contractor is contesting, in accordance with the procedures established by the appropriate Revenue Act, its liability for the tax or the amount of tax, as set forth in 65 ILCS 5/11-42.1-1 et seq.; or (ii) a violation of either Section 33E-3 or Section 33E-4 of Article 33E of the Criminal Code of 1961, 720 ILCS 5/33E-1 et seq.

DATED this 21 day of January, 2025.

Attest/Witness:

By: Lauren Kucik

Title: Contract Manager

Contractor Name: Miller Pipeline

By: D Fox

By: VP, Field Finance

Subscribed and Sworn to before me this 21 day of January 2025

My Commission expires 10/19/28

Lauren Kucik
Notary Public

SEAL
Lauren Kucik
NOTARY PUBLIC
My Comm. Exp. 10-19-2028
STATE OF WISCONSIN

VILLAGE OF NORTHBROOK
CONTRACT FOR
2025 LANDWEHR ROAD SIDEWALK IMPROVEMENTS
BETWEEN VILLAGE OF NORTHBROOK AND MILLER PIPELINE, LLC
ATTACHMENT A – SUPPLEMENTAL SCHEDULE OF CONTRACT TERMS

I. Project Description: Construction of approximately 1,600 square feet of sidewalk pavement along Landwehr Road in the Village of Northbrook, Illinois.

II. Work Site: Landwehr Road from Old Mill Road to Moon Hill Drive in the Village of Northbrook, Cook County.

III. Permits, Licenses, Approvals, and Authorizations: Contractor shall obtain all required governmental permits, licenses, approvals, and authorizations, including without limitation the following: Village Contractor licenses.

IV. Completion Dates:

Completion Date: All work shall be completed by May 9, 2025.

V. Insurance Coverages:

A. Worker's Compensation and Employer's Liability with limits not less than:

(1) Worker's Compensation: Statutory;
(2) Employer's Liability:
$1,000,000 injury - per occurrence
$ 500,000 disease - per employee
$1,000,000 disease - policy limit
Such insurance shall evidence that coverage applies in the State of Illinois.

B. Comprehensive Motor Vehicle Liability, with a combined single limit of liability for bodily injury and property damage of not less $3,000,000 for vehicles owned, non-owned, or rented.
All employees shall be included as insureds.

C. Commercial General Liability with coverage written on an "occurrence" basis and with "per project" limits no less than $3,000,000 Bodily Injury and Property Damage Combined Single Limit.
Coverage is to be written on an "occurrence basis:
Coverages shall include:
- Broad Form Property Damage Endorsement
- Products/Completed Operations (to be maintained for two years following final payment).
- Independent Contractors
- Personal Injury (with Employment Exclusion deleted)
- "X," "C," and "U" exclusions shall be deleted
- Contractual Liability
-Railroad exclusions shall be deleted if Work Site is within 50 feet of any railroad track.

All employees shall be included as insureds.
Contractual Liability shall specifically include the indemnification set forth in the Contract.

D. Umbrella Policy. The required coverages may be in any combination of primary, excess and umbrella policies. Any excess or umbrella policy must provide excess coverage over underlying insurance on a following-form basis such that when any loss covered by the primary policy exceeds the limits under the primary policy, the excess or umbrella policy becomes effective to cover such loss.

E. Deductible. Each policy shall have a deductible or self-insured retention of not more than $1,000.

F. Owner as Additional Insured. Owner shall be named as an Additional Insured on all policies except for Worker's Compensation, and Comprehensive Motor Vehicle Liability.

Each such additional Insured endorsement shall identify Owner as follows: Village of Northbrook, including its President and Board of Trustees and elected and appointed officials, its officers, employees, agents, attorneys, consultants, and representatives. Additional insured coverage shall be provided on endorsements at least as broad as ISO form CG2010 or CG2026 (pre 2004 editions).

G. Other Parties as Additional Insureds. In addition to the Owner, the following parties shall be named as additional insureds on the following policies.

Additional Insured (Applies to Base Bid)	Policy or Policies

VI. Contract Price:

UNIT PRICE CONTRACT

For providing, performing, and completing all Work, the sum of the products resulting from multiplying the number of acceptable units of Unit Price Items listed below incorporated in the Work by the Unit Price set forth below for such Unit Price Item:

Schedule of Prices					
PAY ITEM	ITEM DESCRIPTION	UNIT	QUANTITY	UNIT PRICE	TOTAL
1	EARTH EXCAVATION	CU YD	20	$100.00	$2,000.00
2	TRENCH BACKFILL	CU YD	11	$75.00	$825.00
3	TOPSOIL FURNISH AND PLACE, 4"	SQ YD	180	$15.00	$2,700.00
4	NITROGEN FERTILIZER NUTRIENT	POUND	4	$45.00	$180.00
5	POT ASSIUM FERTILIZER NUTRIENT	POUND	4	$45.00	$180.00
6	SODDING, SALT TOLERANT	SQ YD	180	$23.00	$4,140.00
7	AGGREGATE BASE COURSE, TYPE B 4"	SQ YD	213	$12.00	$2,556.00
8	PROTECTIVE COAT	SQ YD	180	$1.50	$270.00
9	PORTLAND CEMENT CONCRETE SIDEWALK 5 INCH	SQ FT	511	$10.36	$5,293.96
10	PORTLAND CEMENT CONCRETE SIDEWALK 8 INCH	SQ FT	1,101	$15.90	$17,505.90
11	SIDEWALK REMOVAL	SQ FT	879	$1.61	$1,415.19
12	END SECTIONS 15"	EACH	2	$1,000.00	$2,000.00
13	PIPE CULVERTS, CLASS C, TYPE 1 15"	FOOT	21	$150.00	$3,150.00
14	STORM SEWERS, CLASS A, TYPE 1 12"	FOOT	58	$150.00	$8,700.00
15	INLETS, TYPE A, TYPE 8 GRATE	EACH	1	$2,500.00	$2,500.00

16	CATCH BASINS TO BE ADJUSTED WITH NEW TYPE 1 FRAME, CLOSED	EACH	1	$2,500.00	$2,500.00
17	DETECTABLE WARNINGS (SPECIAL)	SQ FT	90	$65.00	$5,850.00

TOTAL CONTRACT PRICE (the sum of the extensions for the Unit Price Items):

Sixty-One Thousand, Seven Hundred Sixty-Six (in writing) Dollars and five (in writing) cents

61,766 (in figures) Dollars and 05 (in figures) cents

VIII. Progress Payments:

A. General. Owner shall pay to Contractor 90 percent of the Value of Work, determined in the manner set forth below, installed and complete in place up to the day before the Pay Request, less the aggregate of all previous Progress Payments. The total amount of Progress Payments made prior to Final Acceptance by Owner shall not exceed 90 percent of the Contract Price.

B. Value of Work. The Value of the Work shall be determined as follows:

(1) Lump Sum Items. For all Work to be paid on a lump sum basis, Contractor shall, not later than 10 days after execution of the Contract and before submitting its first Pay Request, submit to Owner a schedule showing the value of each component part of such Work in form and with substantiating data acceptable to Owner ("Breakdown Schedule"). The sum of the items listed in the Breakdown Schedule shall equal the amount or amounts set forth in the Schedule of Prices for Lump Sum Work. An unbalanced Breakdown Schedule providing for overpayment of Contractor on component parts of the Work to be performed first will not be accepted. The Breakdown Schedule shall be revised and resubmitted until acceptable to Owner. No payment shall be made for any lump sum item until Contractor has submitted, and Owner has approved, an acceptable Breakdown Schedule.
Owner may require that the approved Breakdown Schedule be revised based on developments occurring during the provision and performance of the Work. If Contractor fails to submit a revised Breakdown Schedule that is acceptable to Owner, Owner shall have the right either to suspend Progress and Final Payments for Lump Sum Work or to make such Payments based on Owner's determination of the value of the Work completed.

(2) Unit Price Items. For all Work to be paid on a unit price basis, the value of such Work shall be determined by Owner on the basis of the actual number of acceptable

units of Unit Price Items installed and complete in place, multiplied by the applicable Unit Price set forth in the Schedule of Prices. The actual number of acceptable units installed and complete in place shall be measured on the basis described in Attachment B to the Contractor, in the absence of such description, on the basis determined by Owner. The number of units of Unit Price Items stated in the Schedule of Prices are Owner's estimate only and shall not be used in establishing the Progress or Final Payments due Contractor. The Contract Price shall be adjusted to reflect the actual number of acceptable units of Unit Price Items installed and complete in place upon Final Acceptance.

C. Application of Payments. All Progress and Final Payments made by Owner to Contractor shall be applied to the payment or reimbursement of the costs with respect to which they were paid and shall not be applied to or used for any pre-existing or unrelated debt between Contractor and Owner or between Contractor and any third party.

IX. Per Diem Administrative Charge:

A. General

ONE THOUSAND DOLLARS ($1,000.00) PER DAY FOR EACH DAY AFTER THE SUBSTANTIAL COMPLETION DATE

ONE THOUSAND DOLLARS ($1,000.00) PER DAY FOR EACH DAY AFTER THE FINAL COMPLETION DATE

VILLAGE OF NORTHBROOK
CONTRACT FOR
2025 LANDWEHR ROAD SIDEWALK IMPROVEMENTS
BETWEEN VILLAGE OF NORTHBROOK AND MILLER PIPELINE, LLC
ATTACHMENT B – SPECIFICATIONS AND SPECIAL PROJECT REQUIREMENTS

1. General: The Work required by this Contract shall be performed in accordance with and subject to the following published documents, as referenced within this Contract, except where otherwise required by this Contract and its components:

    1. State of Illinois Standard Specifications for Road and Bridge Construction, latest edition ("Standard Specifications");

    2. Village of Northbrook's Standards and Specifications for Public & Private Improvements, in effect on the date of the Invitation for Bidder's Proposals;

    3. Illinois Manual on Uniform Traffic Control Devices for Streets and Highways, in effect on the date of the Invitation for Bidder's Proposals;

    4. State of Illinois Supplemental Specifications and Recurring Special Provisions in effect on the date of the Invitation for Bidder's Proposals; and

    5. Standard Specifications for Water and Sewer Construction in Illinois, 8th Edition.

    In case of conflict between the specifications and requirements of any of these publications and any part or parts of this Contract and its Attachments, the more restrictive specification or requirement shall take precedence and shall govern.

2. Incidental Items: Any item shown on the plans to be constructed by the Contractor shall be considered incidental to the Contract when there is not a Contract Unit Price Item for such work.

3. Project Engineer: Owner will designate one of its employees or an agent to serve as Project Engineer under this contract.

4. Work Hours: No Work may be performed before 7:00 A.M. on weekdays. In addition, no Work requiring supervision or inspection may be performed after 5:00 P.M. or on Saturdays, Sundays and legal holidays without approval of the Project Engineer. If approved, Saturday Work may not begin earlier than 9:00 A.M. and must conclude by 5:00 P.M., or earlier if specified by the Project Engineer.

    No work may be performed on Rosh Hashana (September 23 and 24, 2025) and Yom Kippur (October 2, 2025).

5. Noise Limitations: Equipment and trucks may not be started or operated outside of the Work hours above unless authorized at the sole discretion of the Project Engineer. All other areas of Work noise restriction will be strictly enforced.

6. Deletion of Work: The Village reserves the right to delete certain sections, phases, or the entire project should the low bid proposal exceed their Village budget for the project. In the event certain sections or phases are deleted from the Contract, the Contractor must honor their low bid proposal Unit Prices.

7. Project Schedule: The Contractor will be required to submit a schedule at or before the preconstruction meeting. The Contractor must make every effort to maintain the submitted schedule which shall be in accordance with the commencement and completion dates set forth in the Contract.

8. Construction And Tree Preservation Specifications For Parkway Trees

The following specifications are guidelines to ensure that the parkway trees, bushes and landscaping are not damaged during the proposed construction.

As with all guidelines, it will be in the contractor's best interest, to schedule a meeting prior to construction to ensure that all questions regarding proposed work and tree impacts are discussed and agreement reached with the Village Forester.

PROXIMITY TO TREES

- Any street excavation to be made will require prior approval by the Village Forester.
- Site markings indicating proximity of proposed work shall be marked by each tree with paint prior to scheduling an inspection by the Village Forester.
- The permitted distance from the trunk of a tree to any proposed trench excavation is 6 feet or more.
- If the proposed improvement is within 6 feet or less of the tree, the tree may be required to be removed. No tree removal shall be allowed. If a tree needs to be removed to complete the required work, the Contractor shall contact the Village Forester for review. No trees shall be removed without approval from the Village Forester.

TREE PRESERVATION FENCING

- Wooden slat snow fence will need to be erected from drip line to drip line of each tree within the construction zone.
- Enclosed Tree Protection Detail will be part of the construction documents.

TREE ROOT PRUNING

- Root pruning shall be performed as required to complete the work. The root pruning as outlined on the plans is an estimate.
- Root pruning will **not be permitted** on any tree that is more than 6 feet away from proposed construction zone.
- Root pruning equipment must be approved by the Village Forester prior to use. Hand root pruning will not be permitted unless approved by the Village Forester. All hand root pruning will require a Certified Arborist's supervision.

TREE REMOVAL

- The use of structural soil and barrier fabric will be considered as an alternative to tree removal.
- All proposed tree removals require a written permit from the Village Forester **prior** to removal.
- If tree removals are required and approved, all costs associated with tree removals shall be incidental to the contract.

TREE CANOPY PRUNING

- Tree branches hanging into the construction zone may be pruned by a Certified Tree Worker.
- All pruning cuts must meet ANSI A300-2001 Standards.

- No American Elms or Oaks may be pruned without written permission and instructions to Certified Arborist from the Village Forester between April 1st and October 31st.

DAMAGE TO TREES

- Failure to follow these specifications will result in the contractor requiring to post a cash bond, equivalent to the value of each damaged tree, for a period not to exceed 3 years.
- Bond value will be determined by the Village Forester.
- The Village Forester reserves the right to stop the job for unsupervised work that is determined to cause irreparable damage to any right-of-way tree. Stop work order will be enforced until the cash bond is paid as determined.

9. Traffic Control and Protection: The Contractor will be responsible for all traffic control and protection to facilitate the installation of the proposed water main and associated pavement work as directed by the Project Engineer, or other Owner representative. This work shall consist of providing and maintaining traffic control and protection devices throughout the course of the project, meeting all applicable requirements of the Standard Specifications for Road and Bridge Construction and all applicable standard traffic control details. Traffic control will also include providing certified flaggers when required.

The Contractor is responsible for the erection and maintenance of all flashing light barricades, lights, and signs necessary for the public safety and convenience in accordance with Section 701 and Article 107.14 of the IDOT Standard Specifications and all County or local requirements. In general, all hazards within the limits of the Work or on detour routes around the Work must be marked with well-painted, well-maintained barricades with operable flashers, reflectors, electric lights, warning and directional signs in sufficient quantity and size adequate to protect life and property. These safeguards shall be moved, changed, increased, or removed as required during the progress of the Work to meet changing conditions. Any traffic control devices found/used on the project site that do not meet the required specifications must be immediately removed from the job site and replaced with approved devices.

The Contractor will also be responsible for properly barricading all stockpiles, equipment, excavations, hazards, materials, and all other construction related items. If the Contractor does not provide adequate barricades and/or other protection, a traffic control deficiency deduction of $500 will be applied per calendar day to the amount owed to the Contractor. This deduction will be assessed if the Contractor repeatedly ignores the requirements of this special provision.

Local roads are to remain open during construction. The Contractor shall not be permitted to close any road outside of work hours, and shall remove all construction equipment and materials from the street to allow complete access for residents, mail and delivery services, and emergency vehicles at the end of each workday. Backfilling, steel plating, moving equipment, moving materials, or other coordination needed during construction to provide access to residents will be required. The Contractor shall have ample materials and equipment on-site to assist with resident access in a timely manner. This work shall be included in the cost of this item.

The Contractor shall submit a work plan outlining project staging, and traffic control operations. Information on how access will be maintained for residents, mail and delivery services, and emergency vehicles during and after work hours shall be specified.

The Village will provide notification to residents regarding the construction, water service shut offs and general project progress. The Contractor shall provide this information to the Engineer in a timely manner upon request of their current schedule and sequencing.

All street barricades, signs and warning devices shall be, as a minimum, in accordance with Chapter 6 of the Manual of Uniform Traffic Control Devices for Streets and Highways, Illinois Department of Transportation, latest revision.

Basis of Payment. This Work will not be paid for separately, but shall be considered incidental to the Contract.

10. Flagmen Required: The Contractor must in all cases, protect the public and the Work during its execution by posting and maintaining the proper signs, barricades, barriers, lights, and other safety devices. The Contractor is responsible for providing certified flagmen during the Work in order to regulate traffic.

Basis of Payment. This Work will not be paid for separately, but shall be considered incidental to the Contract.

11. Mobilization: This work shall consist of preparatory work and operations necessary for the movement of personnel, equipment, materials, supplies, and incidentals to the project site for all work or operations, which must be performed or costs incurred when beginning work on the project. This work and payment shall be conducted according to the applicable Articles of Section 671 of the Standard Specifications.

Basis of Payment. This Work will not be paid for separately, but shall be considered incidental to the Contract, which shall include all preparatory work and operations necessary for the movement of personnel, equipment, materials, supplies, and incidentals to the project site.

12. Construction Layout: The CONTRACTOR shall be responsible for all construction staking required to complete the project. The CONTRACTOR shall provide field forces, equipment, and material to furnish and place construction layout stakes for this project, which shall include offset stakes, reference points, and any other horizontal or vertical controls, including supplementary benchmarks, necessary to secure a correct layout for the Work. Stakes for line and grade of pavement and/or curb shall be set at sufficient station intervals (not to exceed 50 feet) to assure substantial conformance to existing line and grade.

The CONTRACTOR shall be responsible for having the finished work conform to the lines, grades, elevations, and dimensions called for in the plans. Any inspection or checking of the CONTRACTOR's layout by the PROJECT ENGINEER and the acceptance of all or any part of it shall not relieve the CONTRACTOR of his/her responsibility to secure the proper dimensions, grades, and elevations of the work. The CONTRACTOR shall exercise care in the preservation of stakes and benchmarks and shall have them reset when any are damaged, lost, displaced, or removed.

Basis of Payment. This Work will not be paid for separately, but shall be considered incidental to the Contract.

13. Equipment Operation: When the Contractor's equipment is operated on any portion of a traveled surface or structures used by traffic on or adjacent to the section under construction, the Contractor must clean the traveled surface of all dirt and debris at the end of each day's operations. The cost of this Work is incidental to the Contract and no additional compensation will be allowed.

The Contractor shall protect traveled surfaces and structures on or adjacent to the Work, in a manner satisfactory to the Project Engineer, from damage by lugs, cleats, or equipment. Walking of tracked equipment directly on paved streets, driveways, curbs, or sidewalks is not allowed unless such equipment is equipped with rubber tracks.

Equipment used in the performance of the Work must comply with legal load limits established by State statutes or local regulations when moved over or operated on any traveled surface or structure unless permission in writing has been issued by the Project Engineer. Before using any equipment that may exceed the legal roadway load, the Contractor shall secure a permit, allowing ample time for an analysis of stresses to determine whether or not the proposed load is within safe limits. The Owner will not be responsible for any delay in construction operations or for any costs incurred by the Contractor as a result of compliance with the above requirements.

14. Supervision of Sub-Contractors: The Contractor may sub-Contract portions of the Work in accordance with Article 108.01 of the Standard Specifications for Road and Bridge Construction. The Contractor must provide a competent representative on site at all times to provide supervision of all Sub-Contractors during construction. The representative will be responsible for notifying and informing Sub-Contractors of IDOT and Village standards and specifications as directed by the Project Engineer. Failure to provide adequate supervision will result in the project to be suspended until the Contractor's representative is on site. No additional Workdays or project deadline extension will be granted for such delays.

15. Site Cleanliness, Street Sweeping and Dust Control Watering
Dust shall be controlled by daily street sweeping and followed the required dust control plan submitted prior to start of work. Dust control shall be completed daily and at the discretion of the Engineer and sweeper must be capable of collecting sediment, followed by the uniform application of sprinkled water (multiple applications each day as directed by the Engineer), which shall be applied in a manner approved by the Engineer. All equipment used for this Work shall meet with the Project Engineer's approval. There shall be a thorough cleaning of the job site once a week at the approval of the Project Engineer.

Additional dust control watering shall be completed daily, and at the discretion of the Engineer. This work shall consist of furnishing and applying water to control dust and air-borne dirt generated by construction activities. This work shall be performed according to Article 107.36 of the "Standard Specifications" and the following:

Revise Article 107.36 of the "Standard Specifications" as follows:

- Replace sub-paragraph (d) of under the third paragraph with the following:
  (d) Dust shall be controlled by the uniform application of sprinkled water and shall be applied only when directed and in a manner approved by the Engineer. All equipment used for this work shall meet with the Engineer's approval and shall be equipped with adequate measuring devices for determining the exact amount of water discharged. All water used shall be properly documented by ticket or other approved means.

The Contractor is required to fill tank or water storage equipment at the Village of Northbrook Public Works Center located at 655 Huehl Road where a hydrant meter is set up to monitor the exact amount of water discharged. The Contractor is required to properly document all water used when drawing water. There is no fee for water used for this project.

Basis of Payment. Street Sweeping is incidental to the Contract and shall include all labor and equipment for controlling dust as herein specified. If the Contractor does not meet the requirement of controlling dust, as determined by the Project Engineer, the Owner shall make the necessary arrangements to control dust. The cost of such dust control will be deducted from any monies due or to become due to the Contractor. See the deficiency table below for penalties to be assessed if these conditions are not met. Once the Contractor has been notified, they shall have two hours to address any deficiencies.

First Offense	**Warning from Engineer**
Second Offense	**$500**
Third Offense	**$750**
Fourth Offense & More	**$1000/Occurrence**

16. Open Excavation: Excavations shall not be left open overnight unless approved by the Project Engineer. If approved, all excavations which are to be temporarily left open (not backfilled) shall be covered with steel plates and properly barricaded.

    Basis of Payment. The cost of this Work is incidental to the Contract.

17. Work Around Utility And Light Poles: In locations where the proposed Work may potentially compromise the stability of a utility and/or light pole, the Contractor shall Work with the Village and pole Owner to develop an approved plan to complete the Work without disrupting the pole. Any bracing needed shall be performed with the utility owner's written permission.

    Basis of Payment. No additional compensation will be provided for this Work and all costs associated with this Work shall be considered incidental to the Contract.

18. Temporary Aggregate Access Ramps: The Contractor is responsible for the construction and maintenance of temporary aggregate access ramps where specified by the Project Engineer. The ramps shall be constructed of compacted CA-6 in such a manner to allow safe ingress and egress from roadways, driveways, and sidewalks.

    Basis of Payment. The cost for this work shall not be paid for separately but shall be considered incidental to the contract.

19. QC/QA Requirements for PCC and HMA: Quality Control & Quality Assurance (QC/QA) requirements for Portland Cement Concrete shall be in accordance with Section 1020.16 located on Check Sheet #25 of the Supplemental Specifications and Recurring Special Provisions adopted January 1, 2021. Quality Control & Quality Assurance (QA/QC) required for Hot-Mix Asphalt

shall be in accordance with Section 1030.05 of the Standard Specifications for Road and Bridge Construction adopted January 1, 2022. A QC plan is required for Portland Cement Concrete and a separate QC plan is required for Hot-Mix Asphalt.

Basis of Payment. The cost for this work shall not be paid for separately but shall be considered incidental to the contract.

20. Concrete Wash Out Areas: The Contractor shall provide designated wash out facilities for the cleaning of concrete delivery trucks. Under no circumstance shall trucks be permitted to be washed out onto/into any public facility (i.e. street, sewer, parkway, etc.). Any instance of such occurrence shall result in a deduction of $250 per occurrence from any monies due the Contractor.

Basis of Payment. The cost for providing, maintaining, and disposing of designated concrete wash out areas shall not be paid for separately but shall be considered incidental to the contract.

21. Lawn Irrigation And Sprinkler Systems: The Contractor is responsible for locating all lawn irrigation and sprinkler systems prior to the commencement of the Work to prevent damage to such systems. Lawn irrigation and sprinkler systems that are damaged by the Work shall be repaired by the Contractor at no additional cost to the Village or Owner. A Professional Sprinkler System Company, pre-approved by the Project Engineer, must perform all permanent restoration procedures.

Permanent repairs must be completed within three (3) weeks of the damage occurrence. If repair has not been done completely after three (3) weeks of the damage occurrence, a contract price deduction of $100 per calendar day will be imposed.

Material quality used for repairs shall be equal to, or better than, the existing and shall match the type and functionality of the existing components. Failure to repair the damaged lawn irrigation and sprinkler systems within the specified time period will result in the Contractor paying all costs involved for an independent lawn sprinkler system installation company to complete all necessary repairs pursuant to Section 6.3 B. of the contract. Please note that there landscaping features in this area approach the edge of pavement, and it is anticipated that irrigation and lawn sprinkler systems will be encountered near the edge of pavement.

Basis of Payment. The cost for this work shall not be paid for separately but shall be considered incidental to the contract.

22. Earth Excavation: This work shall be performed in accordance with Section 202 of the Standard Specifications, except as modified herein. This Work consists of removing and disposing of existing earth as directed by the project engineer.

Basis of Payment. This Work will be paid for at the Contract Unit Price, per cubic yard, for "Earth Excavation", which Price includes the labor, equipment, material and appurtenances necessary to complete the specified Work.

23. Trench Backfill: Aggregate meeting IDOT CA-6 requirements is required to be used for trench backfill underneath and within two feet (2') of all paved areas other than within the Landwehr Road

right-of-way. The use of recycled CA-6 is permitted if it is certified by a material testing laboratory to meet all of the material requirements for CA-6 as specified in Articles 1004.01 and 1004.05 in the most current edition of the Illinois Department of Transportation Standard Specifications for Road and Bridge Construction.

Landwehr Road is under the jurisdiction of the Cook County Department of Transportation and Highways (CCDOTH). Trench backfill material within CCDOTH right-of-way shall meet IDOT FA-6 sand in accordance with Method 1 in accordance with Article 550.07 in the most current edition of the Illinois Department of Transportation Standard Specifications for Road and Bridge Construction.

Excavated material must be removed from the trench and directly deposited in waiting trucks and hauled off-site to an acceptable landfill area. Trench backfill material must be immediately placed in open trenches after the installed pipe has been inspected.

The Contractor is responsible for providing suitable compaction of all trench backfill and is responsible for failure of any paved or landscaped surface due to trench settlement.

The method of backfilling and compaction used by the Contractor must not be detrimental to the project design concept, the material of construction, and shall not be hazardous to the public's safety.

At no time during the course of the construction project will trench backfill be permitted to be stockpiled overnight within the Village right-of-way. All trench backfill delivered to Work Site must be utilized by the end of the Working day.

The backfill will be mechanically compacted in eight-inch (8") lifts to ninety-five percent (95%) of maximum density at optimum moisture. The elevation of backfilled and compacted trenches must match the surface of the pavement. Proper backfilling procedures must be followed in order that no ponding areas will exist after settlement of the backfill material has taken place.

Basis of Payment. All trench backfill procedure expenses for the backfill with CA-6 stone of the excavation for the storm sewers will be measured in place and paid for at the Contract Unit Price, per cubic yard, for "Trench Backfill". The Contractor shall backfill up to the existing ground elevation as directed by the Project Engineer.

24. Topsoil Furnish and Place. 4": This work shall consist of excavating, temporarily stockpiling, and placing topsoil in accordance with the applicable portions of Section 211. The topsoil shall spread over all areas designated on the plans to be planted/ restored.

A minimum four inches (4") of topsoil must be used to restore lawn areas disturbed by construction. The quality of the delivered topsoil shall be per IDOT specification 1081.05 (a). Prior to placement, the delivered topsoil will be sent to a soil testing lab for analysis. Removal of existing soils required to place the 4" of topsoil shall be considered incidental included in the cost of this pay item. Topsoil shall be fine graded, and compacted/rolled prior to sod placement.

Basis of Payment. As required by Section VIII of Attachment A, ten Percent (10%) Payment Retainage will be held from the Contractor until the Work sites are restored to their pre-construction condition and to the satisfaction of the Village. This Work will be paid for at the Contract Unit Price, per square yard, for "Topsoil Furnish and Place, 4" ", which Price includes the labor, equipment, material and appurtenances necessary to complete the specified Work.

25. Nitrogen Fertilizer Nutrient: This work, measurement, and payment of these pay items shall be in conformance with the appropriate Articles of Sections 250 of the Standard Specifications.

Basis of Payment. As required by Section VIII of Attachment A, ten Percent (10%) Payment Retainage will be held from the Contractor until the Work sites are restored to their pre-construction condition and to the satisfaction of the Village. This Work will be paid for at the Contract Unit Price, per pound, for "Nitrogen Fertilizer Nutrient", which Price includes the labor, equipment, material and appurtenances necessary to complete the specified Work.

26. Potassium Fertilizer Nutrient: This work, measurement, and payment of these pay items shall be in conformance with the appropriate Articles of Sections 250 of the Standard Specifications.

Basis of Payment. As required by Section VIII of Attachment A, ten Percent (10%) Payment Retainage will be held from the Contractor until the Work sites are restored to their pre-construction condition and to the satisfaction of the Village. This Work will be paid for at the Contract Unit Price, per pound, for "Potassium Fertilizer Nutrient", which Price includes the labor, equipment, material and appurtenances necessary to complete the specified Work.

27. Sodding, Salt Tolerant: This work shall consist of preparing the ground surface, sod watering, and furnishing and placing the sod in the areas shown on the Final Engineering Plans. A Professional Landscaping Company, pre-approved by the Project Engineer, must perform all permanent restoration procedures. This work shall be in accordance with Sections 211 and 252 of the Standard Specifications except as modified herein.

Use top quality, 12 to 18 month old bluegrass sod consisting of a minimum of 3 varieties of Bluegrass evenly blended, such as Adelphi, Rugby, Glade, Parade or equivalent. Sod shall be ¾-inch thick, 24 inches wide, and 6-feet long with each piece being of uniform size and thickness for proper installation.

Sod shall be properly moist at the time of cutting and shall be laid within 24 hours of cutting to prevent excessive heat buildup. Width of restoration areas are depicted on the plans. The minimum width of restoration shall be two (2) feet on either side of new sidewalk, behind curb and gutter, or any other disturbed areas even if the disturbed area is less than two (2) feet wide. Lay sod with ends staggered by a minimum of 1-foot. Adjust the sod so seams are firmly butted together and curled edges are laid flat. Sod shall be compacted/rolled after is has been laid. Water thoroughly until subsoil is wet and whenever sod shows signs of drying or wilting. Sprinklers or nozzle hoses are acceptable. Continue watering until the Project is accepted. Watering shall be in accordance with

Section 252. Fertilize immediately prior to placement. Fertilizer shall be in accordance with article 252.03 and shall be applied via mechanical spreader. Sod operations shall be repeated until a satisfactory uniform stand of grass is obtained as determined by the Project Engineer.

A well-made lawn is desired and the Contractor must perform the Work in accordance with the best lawn making practice. In the absence of rain, all sodded areas must be watered thoroughly. The Contractor must supply a watering truck at no additional cost to the Contract. Contractor shall furnish all hoses, meters, back flow preventers, and any other connections necessary to perform watering needs. The direct use of Northbrook Fire Hydrants will not be permitted for acquiring water for watering the restoration. Water must be obtained at the Village of Northbrook Public Works Center located at 655 Huehl Road where a hydrant meter is set up to monitor the exact amount of water discharged. The Contractor is required to properly document all water used when drawing water. There is no fee for water used for this project.

Basis of Payment. As required by Section VIII of Attachment A, ten Percent (10%) Payment Retainage will be held from the Contractor until the Work sites are restored to their pre-construction condition and to the satisfaction of the Village. This Work will be paid for at the Contract Unit Price, per square yard, for "Sodding, Salt Tolerant", which Price includes the labor, equipment, material and appurtenances necessary to complete the specified Work.

28. Aggregate Base Course, Type B 4": sThis Work shall consist of furnishing and installing a compacted four inch (4") thick CA-6 sub-base in all areas specified by the Project Engineer.

Basis of Payment. This Work will be paid for at the Contract Unit Price, per square yard, for "Aggregate Base Course, Type B 4" ", which Price includes the labor, equipment, material and appurtenances necessary to complete the specified Work.

29. Protective Coat: This work, measurement, and payment of these pay items shall be in conformance with the appropriate Articles of Sections 420, 503, 606, and, 1023 of the Standard Specifications.

Basis of Payment. This Work will be paid for at the Contract Unit Price, per square yard, for "Protective Coat", which Price includes the labor, equipment, material and appurtenances necessary to complete the specified Work.

30. Portland Cement Concrete Sidewalk 5 Inch: This Work consists of installation of sidewalk with 5-inch thick Class SI Portland Cement Concrete with material supplied by a Ready-Mix concrete company which must be placed over a four inch (4") thick compacted CA-6 granular sub-base using 2" X 6" form boards. In areas where side curb is to be installed with proposed P.C.C. sidewalk four inches (4") of CA-6 granular sub-base shall be extended to the outside edge of the side curb. Installation of side curb will not be paid for separately but shall be included in the cost of "Portland Cement Concrete Sidewalk 5 Inch". The Contractor must depress all curbs at crosswalks for handicap accessibility. Maximum 1.5% cross slope is allowed unless otherwise approved by the Project Engineer. Sidewalk through driveways will be paid for under the sidewalk pay item. The sidewalk installation Work is to be performed in accordance with Section 424 of the Standard Specifications

Basis of Payment. This Work will be paid for at the Contract Unit Price, per square foot, for "Portland Cement Concrete Sidewalk 5 Inch", which Price includes the labor, equipment, material and appurtenances necessary to complete the specified Work.

31. Portland Cement Concrete Sidewalk 8 Inch: This Work consists of installation of sidewalk with 8-inch thick Class SI Portland Cement Concrete with material supplied by a Ready-Mix concrete company which must be placed over a four inch (4") thick compacted CA-6 granular sub-base using 2'' X 6'' form boards. In areas where side curb is to be installed with proposed P.C.C. sidewalk four inches (4") of CA-6 granular sub-base shall be extended to the outside edge of the side curb. Installation of side curb will not be paid for separately but shall be included in the cost of "Portland Cement Concrete Sidewalk 8 Inch". The Contractor must depress all curbs at crosswalks for handicap accessibility. Maximum 1.5% cross slope is allowed unless otherwise approved by the Project Engineer. Sidewalk through driveways will be paid for under the sidewalk pay item. The sidewalk installation Work is to be performed in accordance with Section 424 of the Standard Specifications

Basis of Payment. This Work will be paid for at the Contract Unit Price, per square foot, for "Portland Cement Concrete Sidewalk 8 Inch", which Price includes the labor, equipment, material and appurtenances necessary to complete the specified Work.

32. Portland Cement Concrete Sidewalk Removal: This work, measurement, and payment shall be done in accordance with the applicable portions of Section 440 of the Standard Specifications.

Basis of Payment. This Work will be paid for at the Contract Unit Price, per square foot, for "Sidewalk Removal", which Price includes the labor, equipment, material and appurtenances necessary to complete the specified Work.

33. Storm Sewers and Pipe Culverts: All Pipe Culverts and Storm Sewers shall be Reinforced Concrete Pipe (RCP) as called out on the plans and shall be furnished and installed in accordance with Sections 542 and 550 of the Standard Specifications.

This Work shall include all labor, material, and equipment necessary for the bedding, installing, jointing, backfilling of the pipe, jetting, and cleaning and all incidental work herein specified, except for "Earth Excavation" and "Trench Backfill" as defined by the Special Provisions, which will be paid for separately.

Basis of Payment. This Work shall be paid for at the Contract Unit Price per foot for "Storm Sewers, Class A, Type 1 12" " or per foot for "Pipe Culverts, Class C, Type 1 15" " or per each for "End Sections 15" ".

34. Catch Basins & Inlets: This Work shall include the installation of catch basins or inlets in accordance with Section 602 of the Standard Specifications and as shown on the contract documents with the referenced frame and grate or approved equal.

Basis of Payment. This Work shall be paid for at the Contract Unit Price per each for "Catch Basins To Be Adjusted With New Type 1 Frame, Closed Lid" and per each for "Inlets, Type A, Type 8 Grate".

35. Detectable Warnings (Special): This work shall include all labor, material, and equipment necessary to install detectable warnings in concrete accessible ramps and as specified herein.

The detectable warnings shall be cast iron panels with powder coated with brick red paint of the size shown on the plans and shall meet the following material specification:

The detectable warning plate shall be constructed of grey iron meeting the requirements of Article 1006.14 of the Standard Specifications and ASTM A48, CLASS 30A, 30B or 35B; or cast ductile iron meeting the requirements of Article 1006.15 of the Standard Specifications.

The installation of detectable warnings shall meet the requirements of Article 424.09 of the Standard Specifications.

Basis of Payment. This work will be measured in place and paid for at the contract unit price per square foot for "Detectable Warnings (Special)", which shall include all labor, material, and equipment required to complete the work as specified herein.

VILLAGE OF NORTHBROOK
CONTRACT FOR
2025 LANDWEHR ROAD SIDEWALK IMPROVEMENTS
BETWEEN VILLAGE OF NORTHBROOK AND MILLER PIPELINE, LLC
ATTACHMENT C – LIST OF DRAWINGS

Plan Sheets Titled: 2025 LANDWEHR ROAD SIDEWALK IMPROVEMENTS

SHEET NO.	SHEET TITLE	DATE LAST REVISED
1	Title Sheet	07/22/2024
2	General Notes	12/14/2023
30	Summary of Quantities	01/13/2025
31-32	Plan View	12/14/2023
33	Improvement Plan (Sta: 163+50 to Sta: 176+00)	12/14/2023
34	Improvement Plan (Sta: 176+00 to Sta: 189+50)	12/14/2023
35	Improvement Plan (Sta: 189+50 to Sta: 201+50)	12/14/2023
36	Improvement Plan (Sta: 201+50 to Sta: 214+00)	12/14/2023
37	Improvement Plan (Sta: 214+00 to Sta: 225+50)	12/14/2023
38	Improvement Plan (Sta: 225+50 to Sta: 237+50)	12/14/2023
39	Improvement Plan (Sta: 237+50 to Sta: 248+50)	12/14/2023
40-47	ADA Grading Plans	12/14/2023
48-104	IDOT Standard Details	12/14/2023

Prepared by: Cook County Department of Transportation and Highways / Northbrook Public Works Department

VILLAGE OF NORTHBROOK (OWNER)
CONTRACT FOR
2025 LANDWEHR ROAD SIDEWALK IMPROVEMENTS BETWEEN VILLAGE OF NORTHBROOK AND MILLER PIPELINE, LLC
APPLICATION FOR PROGRESS PAYMENT NO. _____

FOR THE PERIOD: _____ TO _____, INCLUSIVE SHEET _____ OF _____ SHEETS

CONTRACTOR'S NAME AND ADDRESS: _____

CONTRACT PRICE (LUMP SUM): $_____ ESTIMATED COST (UNIT PRICE): $_____

	NO. AND DESCRIPTION OF UNIT			WORK PERFORMED TO DATE		
ITEM NO. (1)	DETAILED ESTIMATE (2)	UNIT PRICE (3)	COST ESTIMATED (4)	NO. OF UNITS (5)	AMOUNT EARNED TO DATE (6)	% COMPLETE (7)

FOR THE PERIOD: _____ TO _____, INCLUSIVE SHEET _____ OF _____ SHEETS

VILLAGE OF NORTHBROOK (OWNER)
CONTRACT FOR
2025 LANDWEHR ROAD SIDEWALK IMPROVEMENTS BETWEEN VILLAGE OF NORTHBROOK AND MILLER PIPELINE, LLC
APPLICATION FOR PROGRESS PAYMENT NO. _____

CONTRACTOR'S NAME AND ADDRESS: _____

CONTRACT PRICE (LUMP SUM): $_____ ESTIMATED COST (UNIT PRICE): $_____

	NO. AND DESCRIPTION OF UNIT			WORK PERFORMED TO DATE		
ITEM NO. (1)	DETAILED ESTIMATE (2)	UNIT PRICE (3)	COST ESTIMATED (4)	NO. OF UNITS (5)	AMOUNT EARNED TO DATE (6)	% COMPLETE (7)
	Future Items	---------- ---------- ----------		---------- ---------- ----------	---------- ---------- ----------	---------- ---------- ----------
		---------- ---------- ----------	---------- ---------- ---------- ----------	---------- ---------- ---------- ----------		---------- ---------- ---------- ----------

VILLAGE OF NORTHBROOK (OWNER)
CONTRACT FOR
2025 LANDWEHR ROAD SIDEWALK IMPROVEMENTS
BETWEEN VILLAGE OF NORTHBROOK AND MILLER PIPELINE, LLC
APPLICATION FOR PROGRESS PAYMENT NO. _____

CERTIFICATE OF CONTRACTOR OR ITS DULY AUTHORIZED REPRESENTATIVE: To the best of my knowledge and belief, I certify that all items, units, quantities, and prices of Work and material shown on the face of Sheet(s) _____ of this application are correct, that all Work has been performed and materials supplied in full accordance with the terms and conditions of the Contract between the undersigned as Contractor and Village of Northbrook as Owner, dated: _____, and all authorized changes thereto; that the following is a true and correct statement of the Contract account up to and including the last day of the period covered by this application and that no part of the "Total Amount Due" has been received:

(a) Total amount earned (col. 6)..... $ _____

(b) Retained percentage (10%)..... $ _____

(c) Total earned less retained percentage..... $ _____

(d) Total previously certified (Line (c) from previous application no. _____)..... $ _____

(e) Amount due this estimate..... $ _____

(f) Excess cost of field engineering and inspection .....(Subtract) $ _____

(g) Total Amount Due..... $ _____

I further certify that all claims outstanding as of this date against the undersigned as Contractor for labor, materials, and expendable equipment employed in the performance of said Contract up to this date have been paid in full in accordance with the requirements of said Contract. I further certify that all prior payments have been properly applied to the payment or reimbursement of the costs with respect to which they were paid.

DATE: _____ _____
CONTRACTOR

By: _____
Title: _____

CERTIFICATE OF THE CONSULTING ENGINEERS OF THE VILLAGE OF NORTHBROOK: I certify that I have verified this application, and that to the best of my knowledge and belief it is a true and correct statement of Work performed and materials supplied under the Contract, and that Contractor's certified statement of account and the amount due is correct and just, and that all Work and materials included in this application have been performed in full accordance with the terms and conditions of the Contract and authorized changes thereto.

DATE: _____ _____
NAME

By: _____
Title: _____

VILLAGE OF NORTHBROOK RECOMMENDATION FOR PAYMENT: Approved and Payment Recommended:

DATE: _____ VILLAGE OF NORTHBROOK

By: _____
Title: _____

#9899512_v1

SWORN STATEMENT TO OWNER

Page __ of __

STATE OF _____)
)
COUNTY OF _____)

The affiant, _____, being first duly sworn, on oath deposes and says that: Affiant is the _____ of _____, which has a Contract with _____, for _____ _____ for the following described premises, to wit: _____ _____; and Affiant is authorized to make this Sworn Statement to Owner.

Affiant further deposes and says: That, for the purpose of said Contract, the following persons have been contracted with, and have or are furnishing and preparing materials for, and have done or are doing labor on, said improvement; that there is due and to become due them, respectively, the amounts set opposite their names for materials or labor as stated; and that this Sworn Statement to Owner is a full, true, and complete statement of all such persons, the amounts paid and the amount due or to become due to each.

1 Subcontractor or Supplier	2 Kind of Work	3 Amount Of Contract	4 Retention (Incl. Current)	5 Net Previously Paid	6 Net Amount This Payment	7 Balance To Complete
TOTAL						

AMOUNT OF ORIGINAL CONTRACT	$	WORK COMPLETED TO DATE	$
ADDITIONS TO CONTRACT	$	LESS ___% RETAINED	$
TOTAL CONTRACT AND ADDITIONS	$	NET AMOUNT EARNED	$
CREDITS TO CONTRACT	$	NET PREVIOUSLY PAID	$
ADJUSTED TOTAL CONTRACT	$	NET AMOUNT OF THIS PAYMENT	$
		BALANCE TO COMPLETE (Inc. Retention)	$

It is understood that the total amount paid to date plus the amount requested in this application shall not exceed 90% of the cost of work completed to date unless otherwise approved by Owner.

I herewith tender Waivers of Lien for all materials and labor furnished.

Signed: _____

Name: _____

Title: _____

Subscribed and sworn to be before me
this ___ day of _____, 20__.

_____
Notary Public

This Sworn Statement to Owner must be submitted to Owner before each and every payment.

VILLAGE OF NORTHBROOK
CONTRACT FOR
2025 LANDWEHR ROAD SIDEWALK IMPROVEMENTS
BETWEEN VILLAGE OF NORTHBROOK AND MILLER PIPELINE, LLC
CHANGE ORDER

CHANGE ORDER NUMBER _____

I. ITEM DESCRIPTIONS

ITEM 1.

Description of Changes Involved:

Reason for Change:

Revision in Price

ITEM 2.

Description of Changes Involved:

Reason for Change:

Revision in Price

VILLAGE OF NORTHBROOK
CONTRACT FOR
2025 LANDWEHR ROAD SIDEWALK IMPROVEMENTS
BETWEEN VILLAGE OF NORTHBROOK AND MILLER PIPELINE, LLC
CHANGE ORDER

II. ADJUSTMENTS IN AMOUNT OF CONTRACT:

Amount of Original Contract Price	$
Net (addition) (reduction) due to previous Change Orders Nos. ____ to ____	$
Amount of Contract Price, not including this Change Order	$
Change (addition) (reduction) to Contract Price due to this Change Order	$
Amount of Contract Price including this Change Order	$

III. FINDINGS.

Pursuant to the requirements of Section 33E-9 of the Illinois Criminal Code of 1961, the undersigned do hereby find that the Change Order: [check all that are appropriate]

___ is necessary due to circumstances that were not foreseeable at the time the Owner entered into the Contract;

___ is germane to the Contract in its original form as signed; and/or

___ is in the best interest of the Owner and authorized by law.

IV. ACCEPTANCE.

RECOMMENDED FOR ACCEPTANCE:

By:_____ Date:_____
Project Engineer

ACCEPTED: By my authorized signature below, I certify on behalf of Contractor that this Change Order does not authorize or necessitate an increase in the price of any Subcontract under the Contract that is 50% or more of the original Subcontract price.

By:_____ Date: _____
Contractor

APPROVED:

By:_____ Date: _____
Village Manager

Bond No. 0196728

VILLAGE OF NORTHBROOK
CONTRACT FOR
2025 LANDWEHR ROAD SIDEWALK IMPROVEMENTS
BETWEEN VILLAGE OF NORTHBROOK AND MILLER PIPELINE, LLC
PERFORMANCE BOND

KNOW ALL MEN BY THESE PRESENTS: Miller Pipeline, LLC, 301 Arthur Avenue, Mount Prospect, Illinois 60056 as Principal, hereinafter called Contractor, and Berkley Insurance Company, as surety, a corporation organized and existing under the laws of the State of Delaware, hereinafter called Surety, are held and firmly bound unto Village of Northbrook, c/o Village Hall, 1225 Cedar Lane Northbrook, Illinois, 60062 as Obligee, hereinafter called Owner, in the full and just sum of Sixty-One Thousand Seven Hundred Sixty-Six Dollars and Five Cents ($61,766.05), for the payment of which sum of money well and truly to be made, Contractor and Surety bind themselves, their heirs, executors, administrators, successors and assigns, jointly and severally, firmly by these presents, said amount to include payment of actual costs and damages and for attorneys' fees, architectural fees, design fees, engineering fees, accounting fees, testing fees, consulting fees, administrative costs, court costs, interest and any other fees and expenses resulting from or incurred by reason of Contractor's failure to promptly and faithfully perform its Contract with Owner, said Contract being more fully described below, and to include attorneys' fees, court costs and administrative and other expenses necessarily paid or incurred in successfully enforcing performance of the obligation of Surety under this bond.

WHEREAS, Contractor has entered into a written agreement dated **February 25, 2025**, with Owner entitled "CONTRACT FOR 2025 LANDWEHR ROAD SIDEWALK IMPROVEMENTS" (the "Contract"), the terms and conditions of which are by this reference incorporated herein as though fully set forth herein.

NOW, THEREFORE, THE CONDITION OF THIS OBLIGATION IS SUCH THAT if Contractor shall well, truly and promptly perform all the undertakings, covenants, terms, conditions and agreements of said Contractor under the Contract, including, but not limited to, Contractor's obligations under the Contract: (1) to provide, perform and complete at the Work Site and in the manner specified in the Contract all necessary work, labor, services, transportation, equipment, materials, apparatus, machinery, tools, fuels, gas, electric, water, waste disposal, information, data and other means and items necessary for the Construction of approximately 1,600 square feet of sidewalk pavement along Landwehr Road in the Village of Northbrook, Illinois; (2) to procure and furnish all permits, licenses and other governmental approvals and authorizations necessary in connection therewith except as otherwise expressly provided in the Attachment A of the Contract; (3) to procure and furnish all bonds, and all certificates and policies of insurance specified in the Contract; (4) to pay all applicable federal, state and local taxes; (5) to do all other things required of Contractor by the Contract; and (6) to provide, perform and complete all of the foregoing in a proper and workmanlike manner and in full compliance with, and as required by and pursuant to, the Contract; all of which is herein referred to as the "Work," whether or not any of said Work enter into and become component parts of the improvement contemplated, then this obligation shall be null and void; otherwise it shall remain in full force and effect.

Surety, for value received, hereby stipulates and agrees that no changes, modifications, alterations, omissions, deletions, additions, extensions of time or forbearances on the part of either Owner or Contractor to the other in or to the terms of said Contract; in or to the schedules, plans, drawings or specifications; in or to the method or manner of performance of the Work; in or to Owner-furnished facilities, equipment, material, service or sites; or in or to the mode or manner of payment therefor shall in any way release Contractor and Surety or either or any of them, or any of their heirs, executors, administrators, successors or assigns, or affect the obligations of Surety on this bond, all notice of any and all of the foregoing changes, modifications, alterations, omissions, deletions, additions, extensions of time or forbearances and notice of any and all defaults by Contractor or of Owner's termination of Contractor being hereby waived by Surety.

Notwithstanding anything to the contrary in the foregoing paragraph, in no event shall the obligations of Surety under this bond in the event of Contractor's default be greater than the obligations of Contractor under the Contract in the absence of such Contractor default.

In the event of a default or defaults by Contractor, Owner shall have the right to take over and complete the Contract upon 30 calendar days' written notice to Surety, in which event Surety shall pay Owner all costs incurred by Owner in taking over and completing the Contract

At its option, Owner may instead request that Surety take over and complete the Contract, in which event Surety shall take reasonable steps to proceed promptly with completion no later than 30 calendar days from the date on which Owner notifies Surety that Owner wants Surety to take over and complete the Contract.

Owner shall have no obligation to actually incur any expense or correct any deficient performance of Contractor in order to be entitled to receive the proceeds of this bond.

No right of action shall accrue on this bond to or for the use of any person or corporation other than Owner or the heirs, executors, administrators or successors of Owner.

Signed and sealed this 21st day of January, 2025.

Attest/Witness:

By: Lauren Kucik

Title: Contract Manager

PRINCIPAL: **MILLER PIPELINE, LLC**

By: [signature]

Title: VP, Field Finance

Attest/Witness:

By: [signature]

Title: Kelly Wolff, Witness

SURETY: Berkley Insurance Company

Jordan Fisher

By: [signature]

Title: Attorney-in-Fact

SEE INSTRUCTIONS TO BIDDERS, SECTION 7, FOR SIGNATURE REQUIREMENTS

VILLAGE OF NORTHBROOK Bond No. 0196728
CONTRACT FOR
2025 LANDWEHR ROAD SIDEWALK IMPROVEMENTS
BETWEEN VILLAGE OF NORTHBROOK AND MILLER PIPELINE, LLC
LABOR AND MATERIAL PAYMENT BOND

KNOW ALL MEN BY THESE PRESENTS: Miller Pipeline, LLC, 301 Arthur Avenue, Mount Prospect, Illinois 60056 as Principal, hereinafter called Contractor, and Berkley Insurance Company, as surety, a corporation organized and existing under the laws of the State of Delaware, hereinafter called Surety, are held and firmly bound unto Village of Northbrook, c/o Village Hall, 1225 Cedar Lane, Northbrook, Illinois, as Obligee, hereinafter called Owner, for the use and benefit of itself and of claimants as hereinafter defined, in the full and just sum of Sixty-One Thousand Seven Hundred Sixty-Six Dollars and Five Cents ($61,766.05), to be paid to it or the said claimants or its or their assigns, to which payment well and truly to be made Contractor and Surety bind themselves, their heirs, executors, administrators, successors and assigns, jointly and severally, firmly by these presents, said amount to include attorney's fees, court costs and administrative and other expenses necessarily paid or incurred in successfully enforcing performance of the obligation of Surety under this bond.

WHEREAS, Contractor has entered into a written agreement dated **February 25, 2025**, with Owner entitled "CONTRACT FOR 2025 LANDWEHR ROAD SIDEWALK IMPROVEMENTS" (the "Contract"), the terms and conditions of which are by this reference incorporated herein as though fully set forth herein.

NOW, THEREFORE, THE CONDITION OF THIS OBLIGATION IS SUCH THAT if Contractor shall promptly pay or cause to be paid all sums of money that may be due to any claimant with respect to Contractor's obligations under the Contract: (1) to provide, perform and complete at the Work Site and in the manner specified in the Contract all necessary work, labor, services, transportation, equipment, materials, apparatus, machinery, tools, fuels, gas, electric, water, waste disposal, information, data and other means and items necessary for the Construction of approximately 1,600 square feet of sidewalk pavement along Landwehr Road in the Village of Northbrook, Illinois; (2) to procure and furnish all permits, licenses and other governmental approvals and authorizations necessary in connection therewith except as otherwise expressly provided in Attachment A to the Contract; (3) to procure and furnish all bonds and all certificates and policies of insurance specified in the Contract; (4) to pay all applicable federal, state and local taxes; (5) to do all other things required of the Contractor by the Contract; and (6) to provide, perform and complete all of the foregoing in a proper and workmanlike manner and in full compliance with, and as required by or pursuant to, the Contract; all of which is herein referred to as the "Work," whether or not any of said Work enter into and become component parts of the improvement contemplated, then this obligation shall be null and void; otherwise it shall remain in full force and effect.

For purpose of this bond, a claimant is defined as one having a direct Contract with Contractor or with a subcontractor of Contractor to provide, perform or complete any part of the Work.

Contractor and Surety hereby jointly and severally agree that every claimant who has not had all just claims for the furnishing of any part of the Work paid in full, including, without limitation, all claims for amounts due for materials, lubricants, oil, gasoline, rentals of or service or repairs on machinery, equipment, and tools consumed or used in connection with the furnishing of any part of the Work, may sue on this bond for the use of such claimant, may prosecute the suit to final judgment for such sum or sums as may be justly due such claimant, and may have execution therein; provided, however, that Owner shall not be liable for the payment of any costs or expenses of any such suit. The provisions of 30 ILCS 550/1 and 2 shall be deemed inserted herein, including the time limits within which notices of claim must be filed and actions brought under this bond.

Contractor and Surety hereby jointly agree that Owner may sue on this bond if Owner is held liable to, or voluntarily agrees to pay, any claimant directly, but nothing in this bond shall create any duty on the part of Owner to pay any claimant.

Surety, for value received, hereby stipulates and agrees that no changes, modifications, alterations, omissions, deletions, additions, extensions of time or forbearances on the part of Owner or Contractor to the other in or to the terms of said Contract; in or to the schedules, plans, drawings or specifications; in or to the method or

manner of performance of the Work; in or to Owner-furnished facilities, equipment, material, service or site; or in or to the mode or manner of payment therefor shall in any way release Contractor and Surety or either or any of them, or any of their heirs, executors, administrators, successors or assigns, or affect the obligations of said Surety on this bond, all notice of any and all of the foregoing changes, modifications, alterations, omissions, deletions, additions, extensions of time or forbearances and notice of any and all defaults by Contractor or of Owner's termination of Contractor being hereby waived by Surety.

Signed and sealed this 21st day of January, 2025.

Attest/Witness:

By: Lauren Kucik

Title: Contract Manager

PRINCIPAL: **MILLER PIPELINE, LLC**

By: D Fox

Title: VP, Field Finance

Attest/Witness:

By: Kelly Wolff

Title: Kelly Wolff, Witness

SURETY: Berkley Insurance Company

Jordan Fisher

By: Jordan Fisher

Title: Attorney-in-Fact

SEE INSTRUCTIONS TO BIDDERS, SECTION 7, FOR SIGNATURE REQUIREMENTS

No. BI-10254i-el

POWER OF ATTORNEY
BERKLEY INSURANCE COMPANY
WILMINGTON, DELAWARE

KNOW ALL MEN BY THESE PRESENTS, that BERKLEY INSURANCE COMPANY (the "Company"), a corporation duly organized and existing under the laws of the State of Delaware, having its principal office in Greenwich, CT, has made, constituted and appointed, and does by these presents make, constitute and appoint: ***Holly Tallone; Louis J. Bensinger; Kathleen M. Coen; Gary Giulietti; Julia C. Zalesky; Abigail E. Curtiss; Jordan Fisher; Ashley Martin; Dana E. Wium; Kelly Wolff; or Ryan W. Duffy of Lockton Companies, LLC of Blue Bell, PA*** its true and lawful Attorney-in-Fact, to sign its name as surety only as delineated below and to execute, seal, acknowledge and deliver any and all bonds and undertakings, with the exception of Financial Guaranty Insurance, providing that no single obligation shall exceed **Fifty Million and 00/100 U.S. Dollars (U.S.$50,000,000.00),** to the same extent as if such bonds had been duly executed and acknowledged by the regularly elected officers of the Company at its principal office in their own proper persons.

This Power of Attorney shall be construed and enforced in accordance with, and governed by, the laws of the State of Delaware, without giving effect to the principles of conflicts of laws thereof. This Power of Attorney is granted pursuant to the following resolutions which were duly and validly adopted at a meeting of the Board of Directors of the Company held on January 25, 2010:

RESOLVED, that, with respect to the Surety business written by Berkley Surety, the Chairman of the Board, Chief Executive Officer, President or any Vice President of the Company, in conjunction with the Secretary or any Assistant Secretary are hereby authorized to execute powers of attorney authorizing and qualifying the attorney-in-fact named therein to execute bonds, undertakings, recognizances, or other suretyship obligations on behalf of the Company, and to affix the corporate seal of the Company to powers of attorney executed pursuant hereto; and said officers may remove any such attorney-in-fact and revoke any power of attorney previously granted; and further

RESOLVED, that such power of attorney limits the acts of those named therein to the bonds, undertakings, recognizances, or other suretyship obligations specifically named therein, and they have no authority to bind the Company except in the manner and to the extent therein stated; and further

RESOLVED, that such power of attorney revokes all previous powers issued on behalf of the attorney-in-fact named; and further

RESOLVED, that the signature of any authorized officer and the seal of the Company may be affixed by facsimile to any power of attorney or certification thereof authorizing the execution and delivery of any bond, undertaking, recognizance, or other suretyship obligation of the Company; and such signature and seal when so used shall have the same force and effect as though manually affixed. The Company may continue to use for the purposes herein stated the facsimile signature of any person or persons who shall have been such officer or officers of the Company, notwithstanding the fact that they may have ceased to be such at the time when such instruments shall be issued.

IN WITNESS WHEREOF, the Company has caused these presents to be signed and attested by its appropriate officers and its corporate seal hereunto affixed this 2nd day of May, 2024.

Attest:

By _____
Philip S. Welt
Executive Vice President & Secretary

Berkley Insurance Company

By _____
Jeffrey M. Hafter
Senior Vice President

STATE OF CONNECTICUT)
) ss:
COUNTY OF FAIRFIELD)

Sworn to before me, a Notary Public in the State of Connecticut, this 2nd day of May, 2024, by Philip S. Welt and Jeffrey M. Hafter who are sworn to me to be the Executive Vice President and Secretary, and the Senior Vice President, respectively, of Berkley Insurance Company.

_____
Notary Public, State of Connecticut

MARIA C. RUNDBAKEN
NOTARY PUBLIC
CONNECTICUT
MY COMMISSION EXPIRES 04-30-2020

CERTIFICATE

I, the undersigned, Assistant Secretary of BERKLEY INSURANCE COMPANY, DO HEREBY CERTIFY that the foregoing is a true, correct and complete copy of the original Power of Attorney; that said Power of Attorney has not been revoked or rescinded and that the authority of the Attorney-in-Fact set forth therein, who executed the bond or undertaking to which this Power of Attorney is attached, is in full force and effect as of this date.

Given under my hand and seal of the Company, this 21st day of January, 2025.

_____
Vincent P. Forte

BERKLEY INSURANCE COMPANY

STATUTORY BALANCE SHEET
DECEMBER 31, 2023
(AMOUNTS IN THOUSANDS)

Admitted Assets

Bonds	$	15,962,571
Common & Preferred Stocks		5,237,203
Cash & Short Term Investments		1,115,920
Premiums Receivable		2,668,092
Other Assets		4,315,866
Total Admitted Assets	$	29,299,653

Liabilities & Surplus

Loss & LAE Reserves	$	14,815,670
Unearned Premium Reserves		4,692,755
Other Liabilities		1,015,089
Total Liabilities	$	20,523,514
Common Stock	$	43,000
Preferred Stock		10
Additional Paid In Capital		2,980,072
Unassigned Surplus		5,753,056
Total Policyholders' Surplus	$	8,776,138
Total Liabilities & Surplus	$	29,299,653

Officers:
President: William Robert Berkley, Jr.
Secretary: Philip Stanley Welt
Treasurer: Richard Mark Baio
Asst. Treasurer: Bertman Adam Braud, Jr.
Asst. Secretary: Michelle Rene Rodemyer
Asst. Treasurer: Ted William Rogers

Directors:
William Robert Berkley
(Executive Chairman)
William Robert Berkley, Jr.
Philip Stanley Welt
Richard Mark Baio
Paul James Hancock
Carol Josephine LaPunzina
James Gerald Shiel

VILLAGE OF NORTHBROOK
CONTRACT FOR
2025 LANDWEHR ROAD SIDEWALK IMPROVEMENTS
BETWEEN VILLAGE OF NORTHBROOK AND MILLER PIPELINE, LLC
LABOR AND MATERIAL PAYMENT BOND

WAIVER OF LIEN TO DATE

STATE OF _____)
)
COUNTY OF _____)

TO WHOM IT MAY CONCERN:

WHEREAS, the undersigned has been employed by _____ _____ to furnish _____ _____ for the premises known as _____ _____ _____ of which the Village of Northbrook is the Owner.

The undersigned, for and in consideration of _____ _____ ($_____) Dollars, and other good and valuable consideration, the receipt whereof is hereby acknowledged, do(es) hereby waive and release any and all lien or claim of, or right to, lien, under the statutes of the State of Illinois relating to mechanic's liens, with respect to and on said above-described premises, and the improvements thereon, and on the materials, supplies, equipment, fixtures, apparatus, machinery, or other items furnished, and on the moneys, funds, or other considerations due or to become due from the Owner, on account of labor, services, materials, supplies, equipment, fixtures, apparatus, machinery, or other items furnished to this date by the undersigned for the above-described premises. The undersigned further represent(s) and warrant(s) that the statements contained in Exhibit A, attached hereto and by this reference incorporated herein and made a part hereof, are true and correct, and that the undersigned is authorized to make this Waiver of Lien to Date.

Given under hand and seal this____ day of _____, 20__.

Signature and Seal: _____

_____

NOTE: All waivers must be for the full amount paid. If waiver is for a corporation, corporate name should be used, corporate seal affixed and title of officer signing waiver should be set forth; if waiver is for a partnership, the partnership name should be used, partner should sign and designate himself as partner; if waiver is for a limited liability company, the company name should be used and managing member should sign and designate himself as managing member.

AFFIDAVIT

STATE OF _____)
)
COUNTY OF _____)

TO WHOM IT MAY CONCERN:

The undersigned, being duly sworn, deposes and says that: The undersigned is the _____ _____ of the _____ which has a Contract with _ _____ for the _____ work for the premises known as _____ _____ owned by the Village of Northbrook, the total amount of the Contract including extras is $_____, on which payment of $_____ _____ has been received prior to this payment; all waivers are true, correct, and genuine and delivered unconditionally and there is no claim either legal or equitable to defeat the validity of said waivers; the following are the names of all parties who have furnished material or labor, or both, for said work and all parties having contracts or subcontracts for specific portions of said work or for material entering into the construction thereof and the amount due or to become due to each, and the items mentioned include all labor and material required to complete said work according to plans and specifications:

NAMES	WHAT FOR	CONTRACT PRICE	AMOUNT PAID	THIS PAYMENT	BALANCE DUE
TOTAL LABOR AND MATERIAL TO COMPLETE					

; and there are no other contracts for said work outstanding, and there is nothing due or to become due to any person for material, labor, or other work of any kind done or to be done upon or in connection with said work other than above-stated.

VILLAGE OF NORTHBROOK
CONTRACT FOR
2025 LANDWEHR ROAD SIDEWALK IMPROVEMENTS
BETWEEN VILLAGE OF NORTHBROOK AND MILLER PIPELINE, LLC
LABOR AND MATERIAL PAYMENT BOND

Signed this _____ day of _____, 20__. Signature: _____

Name: _____

Title: _____

Subscribed and sworn to be before me this ___ day of _____, 20__.

_____
Notary Public

VILLAGE OF NORTHBROOK
CONTRACT FOR
2025 LANDWEHR ROAD SIDEWALK IMPROVEMENTS
BETWEEN VILLAGE OF NORTHBROOK AND MILLER PIPELINE, LLC
LABOR AND MATERIAL PAYMENT BOND
EXHIBIT A

STATE OF _____)
)
COUNTY OF _____)

TO WHOM IT MAY CONCERN:

The undersigned, being duly sworn, deposes and says that no waivers have been issued in anticipation of payment, but only to evidence payments received from

Contractor, Subcontractor or Supplier	Date	Check No.	Amount

The undersigned further deposes and says that the Village of Northbrook ("Owner") is entitled to rely on the accuracy of the statements made herein and in the Waiver of Lien to Date and Affidavit attached hereto; and that all rights to repudiate any waiver or to assert any claim against Owner are hereby waived, including, without limitation, any claim or right to repudiate any waiver based on industry custom, practice or course of dealing.

Signed this ___day of _____, 20__.

Signature: _____

_____

Printed Name: _____

_____

Title: _____

_____

SUBSCRIBED AND SWORN

to before me this ____ day
of _____, 20__.

_____
Notary Public

My Commission expires: _____

#10088401_v1

FINAL WAIVER OF LIEN

STATE OF _____)
)
COUNTY OF _____)

TO WHOM IT MAY CONCERN:

WHEREAS, the undersigned has been employed by _____ _____ to furnish _____ _____ for the premises known as _____ _____ of which the Village of Northbrook is the Owner.

The undersigned, for and in consideration of _____ (S_____) Dollars, and other good and valuable consideration, the receipt whereof is hereby acknowledged, do(es) hereby waive and release any and all lien or claim of, or right to, lien, under the statutes of the State of Illinois relating to mechanic's liens, with respect to and on said above-described premises, and the improvements thereon, and on the materials, supplies, equipment, fixtures, apparatus, machinery, or other items furnished, and on the moneys, funds, or other considerations due or to become due from the Owner, on account of labor, services, materials, supplies, equipment, fixtures, apparatus, machinery, or other items heretofore furnished, or which may be furnished at any time hereafter, by the undersigned for the above-described premises. The undersigned further represent(s) and warrant(s) that the statements contained in Exhibit A, attached hereto and by this reference incorporated herein and made a part hereof, are true and correct, and that the undersigned is authorized to make this Final Waiver of Lien.

Given under hand and seal this____ day of _____, 20__.

Signature and Seal: _____

NOTE: All waivers must be for the full amount paid. If waiver is for a corporation, corporate name should be used, corporate seal affixed and title of officer signing waiver should be set forth; if waiver is for a partnership, the partnership name should be used, partner should sign and designate himself as partner; if waiver is for a limited liability company, the company name should be used and managing member should sign and designate himself as managing member.

AFFIDAVIT

STATE OF _____)
)
COUNTY OF _____)

TO WHOM IT MAY CONCERN:

The undersigned, being duly sworn, deposes and says that: The undersigned is the _____ _____ of the _____ which has a Contract with _____ _____ for the _____ work for the premises known as _____ _____ owned by the Village of Northbrook, the total amount of the Contract including extras is $_____, on which payment of $_____ has been received prior to this payment; all waivers are true, correct, and genuine and delivered unconditionally and there is no claim either legal or equitable to defeat the validity of said waivers; the following are the names of all parties who have furnished material or labor, or both, for said work and all parties having contracts or subcontracts for specific portions of said work or for material entering into the construction thereof and the amount due or to become due to each, and the items mentioned include all labor and material required to complete said work according to plans and specifications:

VILLAGE OF NORTHBROOK
CONTRACT FOR
2025 LANDWEHR ROAD SIDEWALK IMPROVEMENTS
BETWEEN VILLAGE OF NORTHBROOK AND MILLER PIPELINE, LLC
LABOR AND MATERIAL PAYMENT BOND

NAMES	WHAT FOR	CONTRACT PRICE	AMOUNT PAID	THIS PAYMENT	BALANCE DUE
TOTAL LABOR AND MATERIAL TO COMPLETE					

; and there are no other contracts for said work outstanding, and there is nothing due or to become due to any person for material, labor, or other work of any kind done or to be done upon or in connection with said work other than above-stated.

Signed this _____ day of _____, 20__. Signature: _____

Name: _____

Title: _____

Subscribed and sworn to be before me this ___ day of _____, 20__.

_____
Notary Public

VILLAGE OF NORTHBROOK
CONTRACT FOR
2025 LANDWEHR ROAD SIDEWALK IMPROVEMENTS
BETWEEN VILLAGE OF NORTHBROOK AND MILLER PIPELINE, LLC
LABOR AND MATERIAL PAYMENT BOND
EXHIBIT A

STATE OF _____)
)
COUNTY OF _____)

TO WHOM IT MAY CONCERN:

The undersigned, being duly sworn, deposes and says that no waivers have been issued in anticipation of payment, but only to evidence payments received, including without limitation the final payment, and any partial payments(s) not previously identified in a Waiver of Lien to Date; that the Village of Northbrook ("Owner") is entitled to rely on the accuracy of the statements made herein and in the Final Waiver of Lien and Affidavit attached hereto; and that all rights to repudiate any waiver or to assert any claim against Owner are hereby waived, including, without limitation, any claim or right to repudiate any waiver based on industry custom, practice or course of dealing.

Signed this ___day of _____, 20__.

Signature: _____

_____

Printed Name: _____

_____

Title: _____

_____

SUBSCRIBED AND SWORN
to before me this ____ day
of _____, 20__.

_____
Notary Public

My Commission expires: _____

CERTIFICATE OF LIABILITY INSURANCE

4/1/2025

DATE (MM/DD/YYYY)
1/21/2025

THIS CERTIFICATE IS ISSUED AS A MATTER OF INFORMATION ONLY AND CONFERS NO RIGHTS UPON THE CERTIFICATE HOLDER. THIS CERTIFICATE DOES NOT AFFIRMATIVELY OR NEGATIVELY AMEND, EXTEND OR ALTER THE COVERAGE AFFORDED BY THE POLICIES BELOW. THIS CERTIFICATE OF INSURANCE DOES NOT CONSTITUTE A CONTRACT BETWEEN THE ISSUING INSURER(S), AUTHORIZED REPRESENTATIVE OR PRODUCER, AND THE CERTIFICATE HOLDER.

IMPORTANT: If the certificate holder is an ADDITIONAL INSURED, the policy(ies) must have ADDITIONAL INSURED provisions or be endorsed. If SUBROGATION IS WAIVED, subject to the terms and conditions of the policy, certain policies may require an endorsement. A statement on this certificate does not confer rights to the certificate holder in lieu of such endorsement(s).

PRODUCER Lockton Companies, LLC 1185 Avenue of the Americas, Ste. 2010 New York NY 10036 (646) 572-7300	CONTACT NAME: PHONE (A/C, No, Ext): FAX (A/C, No): E-MAIL ADDRESS:
INSURED 1519811 Miller Pipeline, LLC 8850 Crawfordsville Road Indianapolis IN 46234	INSURER(S) AFFORDING COVERAGE — NAIC # INSURER A : Zurich American Insurance Company — 16535 INSURER B : American Guarantee and Liab. Ins. Co. — 26247 INSURER C : INSURER D : INSURER E : INSURER F :

COVERAGES **CERTIFICATE NUMBER:** 21314925 **REVISION NUMBER:** XXXXXXX

THIS IS TO CERTIFY THAT THE POLICIES OF INSURANCE LISTED BELOW HAVE BEEN ISSUED TO THE INSURED NAMED ABOVE FOR THE POLICY PERIOD INDICATED. NOTWITHSTANDING ANY REQUIREMENT, TERM OR CONDITION OF ANY CONTRACT OR OTHER DOCUMENT WITH RESPECT TO WHICH THIS CERTIFICATE MAY BE ISSUED OR MAY PERTAIN, THE INSURANCE AFFORDED BY THE POLICIES DESCRIBED HEREIN IS SUBJECT TO ALL THE TERMS, EXCLUSIONS AND CONDITIONS OF SUCH POLICIES. LIMITS SHOWN MAY HAVE BEEN REDUCED BY PAID CLAIMS.

INSR LTR	TYPE OF INSURANCE	ADDL INSD	SUBR WVD	POLICY NUMBER	POLICY EFF (MM/DD/YYYY)	POLICY EXP (MM/DD/YYYY)	LIMITS	
A	X COMMERCIAL GENERAL LIABILITY CLAIMS-MADE [X] OCCUR X ContractualLiability X XCU GEN'L AGGREGATE LIMIT APPLIES PER: POLICY [X] PRO-JECT [X] LOC X OTHER: SIR:$2,000,000	Y	Y	GLO-1497589-01	4/1/2024	4/1/2025	EACH OCCURRENCE DAMAGE TO RENTED PREMISES (Ea occurrence) MED EXP (Any one person) PERSONAL & ADV INJURY GENERAL AGGREGATE PRODUCTS - COMP/OP AGG $	$ 2,000,000 $ 1,000,000 $ 10,000 $ 2,000,000 $ 4,000,000 $ 4,000,000 $
A	AUTOMOBILE LIABILITY X ANY AUTO OWNED AUTOS ONLY HIRED AUTOS ONLY SCHEDULED AUTOS NON-OWNED AUTOS ONLY	Y	Y	BAP-1497588-01	4/1/2024	4/1/2025	COMBINED SINGLE LIMIT (Ea accident) BODILY INJURY (Per person) BODILY INJURY (Per accident) PROPERTY DAMAGE (Per accident) $	$ 5,000,000 $ XXXXXXX $ XXXXXXX $ XXXXXXX $ XXXXXXX
B	X UMBRELLA LIAB [X] OCCUR EXCESS LIAB [ ] CLAIMS-MADE [ ] DED [ ] RETENTION $	Y	Y	SXS-1451583-01	4/1/2024	4/1/2025	EACH OCCURRENCE AGGREGATE $	$ 5,000,000 $ 5,000,000 $ XXXXXXX
A	WORKERS COMPENSATION AND EMPLOYERS' LIABILITY ANY PROPRIETOR/PARTNER/EXECUTIVE OFFICER/MEMBER EXCLUDED? (Mandatory in NH) Y/N [N] If yes, describe under DESCRIPTION OF OPERATIONS below	N/A	N	WC-1497591-01	4/1/2024	4/1/2025	X PER STATUTE [ ] OTH-ER E.L. EACH ACCIDENT E.L. DISEASE - EA EMPLOYEE E.L. DISEASE - POLICY LIMIT	$ 1,000,000 $ 1,000,000 $ 1,000,000

DESCRIPTION OF OPERATIONS / LOCATIONS / VEHICLES (ACORD 101, Additional Remarks Schedule, may be attached if more space is required)
Work Site: Landwater Road from Old Mill Road to Moon Hill Drive in the Village of Northbrook, Cook County.
Village of Northbrook, including its President and Board of Trustees and elected and appointed officials, its officers, employees, agents, attorneys, consultants, and representatives and Cook County 118 N. Clark St. Chicago, IL 60602 are included as an Additional Insured with respects General Liability, Automobile Liability, as required by written contract. Waiver of Subrogation applies with respect to General Liability, automobile Liability, Workers Compensation, as required by written contract. Workers Compensation coverage applies in the state of Illinois.

CERTIFICATE HOLDER

21314925
Village of Northbrook
1225 Cedar Lane
Northbrook IL 60062

CANCELLATION See Attachments

SHOULD ANY OF THE ABOVE DESCRIBED POLICIES BE CANCELLED BEFORE THE EXPIRATION DATE THEREOF, NOTICE WILL BE DELIVERED IN ACCORDANCE WITH THE POLICY PROVISIONS.

AUTHORIZED REPRESENTATIVE

© 1988-2015 ACORD CORPORATION. All rights reserved.

The ACORD name and logo are registered marks of ACORD

Village of Northbrook
1225 Cedar Lane
Northbrook,IL 60062

Dear Village of Northbrook:

In an effort to meet demand for instant electronic delivery of certificates, Lockton Companies now provides paperless delivery of Certificates of Insurance. Thank you for your patience and willingness to help us lessen our environmental footprint.

To fulfill your certificate delivery, we need your email address. Please contact us via one of the methods below with your Holder ID number, email address, and phone number in the event we have any questions.

Your Holder ID number is 21314925.

- Email: Arteracertrequests@lockton.com
- Toll-free automated phone service: 866-218-4018

If this certificate is no longer needed or valid, please notify us.

Thank you,

Lockton Companies

POLICY NUMBER: BAP-1497588-01

COMMERCIAL AUTO
CA 20 01 03 06

THIS ENDORSEMENT CHANGES THE POLICY. PLEASE READ IT CAREFULLY.

LESSOR -- ADDITIONAL INSURED AND LOSS PAYEE

This endorsement modifies insurance provided under the following:

BUSINESS AUTO COVERAGE FORM
BUSINESS AUTO PHYSICAL DAMAGE COVERAGE FORM
GARAGE COVERAGE FORM
MOTOR CARRIER COVERAGE FORM
TRUCKERS COVERAGE FORM

With respect to coverage provided by this endorsement, the provisions of the Coverage Form apply unless modified by the endorsement

This endorsement changes the policy effective on the inception date of the policy unless another date is indicated below

Named Insured: Artera Services, LLC

Endorsement Effective Date: 4/1/2024

Countersignature

Of Authorized Representative Name:

Title:

Signature:

Date:

SCHEDULE

Insurance Company: ZURICH AMERICAN INSURANCE COMPANY	
Policy Number: BAP-1497588-01	Effective Date: 4/1/2024
Expiration Date: 4/1/2025	
Named Insured: ARTERA SERVICES LLC	
Address: 3100 INTERSTATE N. CIRCLE, SE, SUITE 150 ATLANTA GA 30339	
Additional Insured (Lessor): ALL LESSORS Address: 3100 INTERSTATE N. CIRCLE SE, SUITE 150 ATLANTA, GA 30339	
Designation Or Description Of "Leased Autos": ALL LEASED AUTOS	

Coverages	Limit Of Insurance
Liability	Each "Accident"
Comprehensive	Actual Cash Value Or Cost Of Repair Whichever Is Less, Minus Deductible For Each Covered "Leased Auto"
Collision	Actual Cash Value Or Cost Of Repair Whichever Is Less, Minus Deductible For Each Covered "Leased Auto"
Specified Causes Of Loss	Actual Cash Value Or Cost Of Repair Whichever Is Less, Minus Deductible For Each Covered "Leased Auto"
Information required to complete this Schedule, if not shown above, will be shown in the Declarations	

A. Coverage

1. Any "leased auto" designated or described in the Schedule will be considered a covered "auto" you own and not a covered "auto" you hire or borrow

2. For a "leased auto" designated or described in the Schedule, Who Is An Insured is changed to include as an "insured" the lessor named in the Schedule However, the lessor is an "insured" only for "bodily injury" or "property damage" resulting from the acts or omissions by:

   a. You;

   b. Any of your "employees" or agents; or

   c. Any person, except the lessor or any "employee" or agent of the lessor, operating a "leased auto" with the permission of any of the above

3. The coverages provided under this endorsement apply to any "leased auto" described in the Schedule until the expiration date shown in the Schedule, or when the lessor or his or her agent takes possession of the "leased auto", whichever occurs first

B. Loss Payable Clause

1. We will pay, as interest may appear, you and the lessor named in this endorsement for "loss" to a "leased auto"
2. The insurance covers the interest of the lessor unless the "loss" results from fraudulent acts or omissions on your part
3. If we make any payment to the lessor, we will obtain his or her rights against any other party

C. Cancellation

1. If we cancel the policy, we will mail notice to the lessor in accordance with the Cancellation Common Policy Condition
2. If you cancel the policy, we will mail notice to the lessor
3. Cancellation ends this agreement

A. The lessor is not liable for payment of your premiums

B. Additional Definition

As used in this endorsement:

"Leased auto" means an "auto" leased or rented to you, including any substitute, replacement or extra "auto" needed to meet seasonal or other needs, under a leasing or rental agreement that requires you to provide direct primary insurance for the lessor

POLICY NUMBER: **BAP-1497588-01**

COMMERCIAL AUTO
CA 04 44 10 13

THIS ENDORSEMENT CHANGES THE POLICY. PLEASE READ IT CAREFULLY.

WAIVER OF TRANSFER OF RIGHTS OF RECOVERY AGAINST OTHERS TO US (WAIVER OF SUBROGATION)

This endorsement modifies insurance provided under the following:

AUTO DEALERS COVERAGE FORM
BUSINESS AUTO COVERAGE FORM
MOTOR CARRIER COVERAGE FORM

With respect to coverage provided by this endorsement, the provisions of the Coverage Form apply unless modified by the endorsement.

This endorsement changes the policy effective on the inception date of the policy unless another date is indicated below.

Named Insured: Artera Services, LLC

Endorsement Effective Date: 4/1/2024

SCHEDULE

Name(s) Of Person(s) Or Organization(s):

Any person or organization with whom you have agreed, through written contract, agreement or permit, executed prior to the loss, except where such contract or agreement is prohibited by law.

Information required to complete this Schedule, if not shown above, will be shown in the Declarations.

The **Transfer Of Rights Of Recovery Against Others To Us** condition does not apply to the person(s) or organization(s) shown in the Schedule, but only to the extent that subrogation is waived prior to the "accident" or the "loss" under a contract with that person or organization.

© Insurance Services Office, Inc., 2011

WORKERS COMPENSATION AND EMPLOYERS LIABILITY INSURANCE POLICY **WC 00 03 13**

(Ed. 4-84)

WAIVER OF OUR RIGHT TO RECOVER FROM OTHERS ENDORSEMENT

We have the right to recover our payments from anyone liable for an injury covered by this policy. We will not enforce our right against the person or organization named in the Schedule. (This agreement applies only to the extent that you perform work under a written contract that requires you to obtain this agreement from us.)

This agreement shall not operate directly or indirectly to benefit anyone not named in the Schedule.

Schedule

ALL PERSONS AND/OR ORGANIZATIONS THAT ARE REQUIRED BY WRITTEN CONTRACT OR AGREEMENT WITH THE INSURED, EXECUTED PRIOR TO THE ACCIDENT OR LOSS, THAT WAIVER OF SUBROGATION BE PROVIDED UNDER THIS POLICY FOR WORK PERFORMED BY YOU AND FOR THAT PERSON AND/OR ORGANIZATION.

This endorsement changes the policy to which it is attached and is effective on the date issued unless otherwise stated. **{The information below is required only when this endorsement is issued subsequent to preparation of the policy.)**

Endorsement Effective 4/1/2024 Policy No. [WC-1497591-01 Endorsement No.

Insured: Miller Pipeline, LLC Premium $ INCL.

Insurance Company Zurich American Insurance Company

Countersigned By

WC 00 03 13
(Ed. 4-84)

1983 National Council on Compensation Insurance.

Additional Insured – Automatic – Owners, Lessees Or Contractors

THIS ENDORSEMENT CHANGES THE POLICY. PLEASE READ IT CAREFULLY.	
Policy No GLO-1497589-01	Effective Date: 4/1/2024

This endorsement modifies insurance provided under the:

Commercial General Liability Coverage Part

A. Section **II – Who Is An Insured** is amended to include as an additional insured any person or organization whom you are required to add as an additional insured under a written contract or written agreement executed by you, but only with respect to liability for "bodily injury", "property damage" or "personal and advertising injury" and subject to the following:

1. If such written contract or written agreement specifically requires that you provide that the person or organization be named as an additional insured under one or both of the following endorsements:

a. The Insurance Services Office (ISO) ISO CG 20 10 (10/01 edition); or

b. The ISO CG 20 37 (10/01 edition),

such person or organization is then an additional insured with respect to such endorsement(s), but only to the extent that "bodily injury", "property damage" or "personal and advertising injury" arises out of:

(1) Your ongoing operations, with respect to Paragraph **1.a.** above; or

(2) "Your work", with respect to Paragraph **1.b.** above,

which is the subject of the written contract or written agreement.

However, solely with respect to this Paragraph **1.**, insurance afforded to such additional insured:

(a) Only applies if the "bodily injury", "property damage" or "personal and advertising injury" offense occurs during the policy period and subsequent to your execution of the written contract or written agreement; and

(b) Does not apply to "bodily injury" or "property damage" caused by "your work" and included within the "products-completed operations hazard" unless the written contract or written agreement specifically requires that you provide such coverage to such additional insured.

2. If such written contract or written agreement specifically requires that you provide that the person or organization be named as an additional insured under one or both of the following endorsements:

a. The Insurance Services Office (ISO) ISO CG 20 10 (07/04 edition); or

b. The ISO CG 20 37 (07/04 edition),

such person or organization is then an additional insured with respect to such endorsement(s), but only to the extent that "bodily injury", "property damage" or "personal and advertising injury" is caused, in whole or in part, by:

(1) Your acts or omissions; or

(2) The acts or omissions of those acting on your behalf,

Includes copyrighted material of Insurance Services Office, Inc., with its permission.

in the performance of:

(a) Your ongoing operations, with respect to Paragraph **2.a.** above; or

(b) "Your work" and included in the "products-completed operations hazard", with respect to Paragraph **2.b.** above,

which is the subject of the written contract or written agreement.

However, solely with respect to this Paragraph **2.**, insurance afforded to such additional insured:

(i) Only applies if the "bodily injury", "property damage" or "personal and advertising injury" offense occurs during the policy period and subsequent to your execution of the written contract or written agreement; and

(ii) Does not apply to "bodily injury" or "property damage" caused by "your work" and included within the "products-completed operations hazard" unless the written contract or written agreement specifically requires that you provide such coverage to such additional insured.

3. If neither Paragraph **1.** nor Paragraph **2.** above apply and such written contract or written agreement requires that you provide that the person or organization be named as an additional insured:

a. Under the ISO CG 20 10 (04/13 edition, any subsequent edition or if no edition date is specified); or

b. With respect to ongoing operations (if no form is specified),

such person or organization is then an additional insured only to the extent that "bodily injury", "property damage" or "personal and advertising injury" is caused, in whole or in part by:

(1) Your acts or omissions; or

(2) The acts or omissions of those acting on your behalf,

in the performance of your ongoing operations, which is the subject of the written contract or written agreement.

However, solely with respect to this Paragraph **3.**, insurance afforded to such additional insured:

(a) Only applies to the extent permitted by law;

(b) Will not be broader than that which you are required by the written contract or written agreement to provide for such additional insured; and

(c) Only applies if the "bodily injury", "property damage" or "personal and advertising injury" offense occurs during the policy period and subsequent to your execution of the written contract or written agreement.

4. If neither Paragraph **1.** nor Paragraph **2.** above apply and such written contract or written agreement requires that you provide that the person or organization be named as an additional insured:

a. Under the ISO CG 20 37 (04/13 edition, any subsequent edition or if no edition date is specified); or

b. With respect to the "products-completed operations hazard" (if no form is specified),

such person or organization is then an additional insured only to the extent that "bodily injury" or "property damage" is caused, in whole or in part by "your work" and included in the "products-completed operations hazard", which is the subject of the written contract or written agreement.

However, solely with respect to this Paragraph **4.**, insurance afforded to such additional insured:

(1) Only applies to the extent permitted by law;

(2) Will not be broader than that which you are required by the written contract or written agreement to provide for such additional insured;

(3) Only applies if the "bodily injury" or "property damage" occurs during the policy period and subsequent to your execution of the written contract or written agreement; and

Includes copyrighted material of Insurance Services Office, Inc., with its permission.

(4) Does not apply to "bodily injury" or "property damage" caused by "your work" and included within the "products-completed operations hazard" unless the written contract or written agreement specifically requires that you provide such coverage to such additional insured.

B. Solely with respect to the insurance afforded to any additional insured referenced in Section **A.** of this endorsement, the following additional exclusion applies:

This insurance does not apply to "bodily injury", "property damage" or "personal and advertising injury" arising out of the rendering of, or failure to render, any professional architectural, engineering or surveying services including:

1. The preparing, approving or failing to prepare or approve maps, shop drawings, opinions, reports, surveys, field orders, change orders or drawings and specifications; or
2. Supervisory, inspection, architectural or engineering activities.

This exclusion applies even if the claims against any insured allege negligence or other wrongdoing in the supervision, hiring, employment, training or monitoring of others by that insured, if the "occurrence" which caused the "bodily injury" or "property damage", or the offense which caused the "personal and advertising injury", involved the rendering of or the failure to render any professional architectural, engineering or surveying services.

C. Solely with respect to the coverage provided by this endorsement, the following is added to Paragraph **2. Duties In The Event Of Occurrence, Offense, Claim Or Suit** of Section **IV – Commercial General Liability Conditions**:

The additional insured must see to it that:

(1) We are notified as soon as practicable of an "occurrence" or offense that may result in a claim;

(2) We receive written notice of a claim or "suit" as soon as practicable; and

(3) A request for defense and indemnity of the claim or "suit" will promptly be brought against any policy issued by another insurer under which the additional insured may be an insured in any capacity. This provision does not apply to insurance on which the additional insured is a Named Insured if the written contract or written agreement requires that this coverage be primary and non-contributory.

D. Solely with respect to the coverage provided by this endorsement:

1. The following is added to the **Other Insurance** Condition of Section **IV – Commercial General Liability Conditions**:

Primary and Noncontributory insurance

This insurance is primary to and will not seek contribution from any other insurance available to an additional insured provided that:

a. The additional insured is a Named Insured under such other insurance; and

b. You are required by written contract or written agreement that this insurance be primary and not seek contribution from any other insurance available to the additional insured.

2. The following paragraph is added to Paragraph **4.b.** of the **Other Insurance** Condition under Section **IV – Commercial General Liability Conditions**:

This insurance is excess over:

Any of the other insurance, whether primary, excess, contingent or on any other basis, available to an additional insured, in which the additional insured on our policy is also covered as an additional insured on another policy providing coverage for the same "occurrence", offense, claim or "suit". This provision does not apply to any policy in which the additional insured is a Named Insured on such other policy and where our policy is required by a written contract or written agreement to provide coverage to the additional insured on a primary and non-contributory basis.

E. This endorsement does not apply to an additional insured which has been added to this Coverage Part by an endorsement showing the additional insured in a Schedule of additional insureds, and which endorsement applies specifically to that identified additional insured.

Includes copyrighted material of Insurance Services Office, Inc., with its permission.

F. Solely with respect to the insurance afforded to an additional insured under Paragraph **A.3.** or Paragraph **A.4.** of this endorsement, the following is added to Section **III – Limits Of Insurance**:

Additional Insured – Automatic – Owners, Lessees Or Contractors Limit

The most we will pay on behalf of the additional insured is the amount of insurance:

1. Required by the written contract or written agreement referenced in Section **A.** of this endorsement; or
2. Available under the applicable Limits of Insurance shown in the Declarations,

whichever is less.

This endorsement shall not increase the applicable Limits of Insurance shown in the Declarations.

All other terms, conditions, provisions and exclusions of this policy remain the same.

Includes copyrighted material of Insurance Services Office, Inc., with its permission.

Waiver Of Subrogation (Blanket) Endorsement

Policy No.	Eff. Date of Pol.	Exp. Date of Pol.	Eff. Date of End.	Producer	Add'l Prem.	Return Prem.
GLO-1497589-01	4/1/2024	4/1/2025		34937000	$ INCL	$

THIS ENDORSEMENT CHANGES THE POLICY. PLEASE READ IT CAREFULLY.

This endorsement modifies insurance provided under the:

Commercial General Liability Coverage Part

The following is added to the **Transfer Of Rights Of Recovery Against Others To Us Condition**:

If you are required by a written contract or agreement, which is executed before a loss, to waive your rights of recovery from others, we agree to waive our rights of recovery. This waiver of rights shall not be construed to be a waiver with respect to any other operations in which the insured has no contractual interest.

Supplement(s)

ORIGINAL

INTERGOVERNMENTAL AGREEMENT

County of Cook

Landwehr Road
Hampton Court to Dundee Road

Village of Northbrook

Section: 22-PRPN1-00-PV

This **Intergovernmental Agreement** (the "Agreement") is made and entered into on this _____day of _____, 2024, by and between the County of Cook, a body politic and corporate of the State of Illinois (the "County"), acting by and through its Department of Transportation and Highways (the "Department"), and the Village of Northbrook, a municipal corporation of the State of Illinois (the "Village"). The County and Village are sometimes referred to herein individually as a "Party" and collectively as the "Parties."

RECITALS

WHEREAS, in order to facilitate the free flow of traffic and ensure the safety of the motoring public, the Parties desire to make improvements to Landwehr Road from Hampton Court to Dundee Road (the "County Project");

WHEREAS, the scope of work for the County Project includes, but is not limited to, roadway rehabilitation of the three-mile corridor, including patching and resurfacing of the existing roadway, striping, median removal, curb and gutter removal/replacement, sidewalk and ADA compliant curb ramp installation and new traffic signal installations at various intersections;

WHEREAS, at the mutual understanding of the County and the Village, sidewalk and ramp removal and installation and miscellaneous drainage work along Landwehr Road at the following locations will not be included in the County Project and shall be constructed as part of a separate improvement led by the Village ("Village Project"):

1. Landwehr Road/Old Mill Road
2. Landwehr Road/Palm Lane and Landwehr/Robincrest Drive
3. Landwehr Road/Hemlock Lane
4. Landwehr Road/Longvalley Drive
5. Landwehr Road/River Falls Drive
6. Landwehr Road/Moon Hill Drive

WHEREAS, this Agreement sets forth certain responsibilities of the Parties for the County and Village Projects;

WHEREAS, the County, by virtue of its powers as set forth in the Counties Code, 55 ILCS 5/1-1 et seq., and the Illinois Highway Code, 605 ILCS 5/1-101 et seq., is authorized to enter into this Agreement;

WHEREAS, the Village, by virtue of its powers as set forth in the Illinois Municipal Code, 65 ILCS 5/1-1-1 et seq., is authorized to enter into this Agreement; and

WHEREAS, this Agreement is further authorized under Article VII, Section 10 of the Illinois Constitution and by the provisions of the Intergovernmental Cooperation Act, 5 ILCS 220/1 et seq.

NOW, THEREFORE, in consideration of the aforementioned recitals and the mutual covenants contained herein, the Parties agree as follows:

I. CONSTRUCTION AND CONSTRUCTION ENGINEERING

A. **Plans and Specifications.** The Village shall prepare final construction plans and specifications for the Village Project and submit them to the County for review prior to the start of construction. The County may review the construction plans and specifications within fourteen (14) calendar days of receipt thereof. If the Village does not receive comments from the County within this time period, or receive a request for an extension of time, which request shall be reasonably considered, the lack of response shall be deemed an approval of the plans and specifications. In the event of disapproval, the County will detail in writing its objections to the proposed plans and specifications for review and consideration by the Village. Any dispute(s) concerning the plans and specifications for the Village Project shall be resolved in accordance with Section IV.H. of this Agreement.

B. **Construction.** The Village shall cause the Village Project to be constructed in accordance with the approved plans and specifications, subject to reimbursement by the County as hereinafter stipulated.

C. **Insurance.** The Village shall require that its construction contractor name the County as an additional insured party under the contractor's general liability insurance policy.

D. **Construction Engineering.** The Village shall perform, or cause to be performed, construction engineering services for the Village Project.

E. **Schedule Coordination.** The Village shall schedule and coordinate the performance of the Village Project so as to not interfere with the completion of the County Project.

F. **Pre-Construction and Progress Meetings.** The Village shall provide not less than fourteen (14) calendar days' advance written notice to the County prior to the pre-construction meeting for the Village Project and not less than seven (7) calendar days' advance written notice to the County prior to the start of construction of the Village Project. A representative from the County shall attend the pre-construction meeting and be available for all other construction meetings as needed.

G. **Permits and Fees.** The Village shall secure all regulatory permits required to construct the Village Project. Any fees for said permits shall be paid by the Village.

H. **Right of Inspection.** The County and its authorized agents shall have reasonable rights of inspection (including pre-final and final inspection) during and upon completion of construction of the Village Project. The Village shall work cooperatively with the County to address and resolve any concerns raised by the County with respect to construction and/or construction engineering of the Village Project. Any dispute(s) concerning

construction and/or construction engineering of the Village Project shall be resolved in accordance with Section IV.H. of this Agreement.

I. **Final Inspection**. The County shall participate in a final inspection of the Village Project. The Village shall provide not less than fourteen (14) calendar days' advance written notice to the County prior to the date of the final inspection. The County shall submit final punch list items to the Village not less than seven (7) calendar days prior to the date of the final inspection.

J. **Permits**. The Village shall apply for and the County shall not unreasonably withhold any and all permits for right of access (ingress or egress) and/or temporary use of the County's property and/or right of way within the limits of the Village Project to the Village and/or its agents, without charge of permit fees to the Village. Similarly, the County shall apply for and the Village shall not unreasonably withhold any and all permits for right of access (ingress or egress) and/or temporary use of the Village's property and/or right of way within the limits of the County Project to the County and/or its agents, without charge of permit fees to the County.

II. MAINTENANCE

A. **Definition**. As used herein, the terms "maintain" and "maintained" mean keeping the facility being maintained in good and sufficient repair and appearance. Such maintenance includes the full responsibility for the construction, removal and/or replacement of the maintained facility when needed.

B. **Roadway**. Upon completion of the County Project, the County shall continue to own, operate, and maintain those portions of Landwehr Road that are under its established jurisdictional authority. Maintenance responsibilities include, but are not limited to, all routine surface and pothole repairs, temporary full-depth patches, crack and joint sealing, cleaning and litter pickup, minor curb and gutter repair, drainage structure repair and cleaning, snow and ice control, and other operational services.

C. **Sidewalks**. The Village shall own, operate, and maintain any sidewalks constructed or improved as part of the County and Village Projects, in compliance with the Americans with Disabilities Act (ADA), Public Right of Way Accessibility Guidelines (PROWAG), and all other applicable federal and state laws and regulations. Maintenance responsibilities include, but are not limited to, maintenance and repair of surfaces, including grinding, removal and replacement of sidewalks, and removal of weeds and/or debris.

D. **Indemnification**. The Village shall defend, indemnify, and hold harmless the County and its commissioners, officials, employees, agents, and representatives, and their respective heirs, successors, and assigns, from and against any and all costs, expenses, attorneys' fees, losses, damages, and liabilities incurred and/or suffered, directly or indirectly, from or attributable to claims arising out of or incident to the construction, use, repair and/or maintenance of any sidewalks constructed or improved as part of the County and Village Projects.

E. **Survives Termination.** The Parties' maintenance responsibilities described in this section shall survive termination of this Agreement.

III. FINANCIAL

A. **County Cost Participation.** The County shall pay all actual construction and construction engineering costs for the County Project.

The County also agrees to reimburse the Village for all construction costs associated with the Village Project, as well as related construction engineering costs, which shall be calculated as ten percent (10%) of the actual construction costs.

Notwithstanding the foregoing, the County's maximum cost participation under this Agreement shall not exceed $55,000.

B. **Reimbursement.** Upon completion of the Village Project and receipt of an invoice from the Village, the County shall reimburse the Village for its share of the costs of the Village Project as set forth in this Agreement.

C. **Required Documentation.** In order to receive reimbursement from the County, the Village must submit the following documentation along with the invoice requesting payment:

i. A cover letter addressed to the Department's Bureau Chief of Construction, including the name of the Project and its associated section number;
ii. Copies of all cancelled checks paid to the contractor(s) and/or consultant(s) (or copies of the associated bank ledgers reflecting the payments);
iii. Copies of all associated invoices submitted to the Village by the contractor(s) and/or consultant(s) for the services rendered.

D. **Ineligible Costs.** The County shall not reimburse the Village for any costs that are:

i. Contrary to the provisions of this Agreement;
ii. Not directly related to carrying out construction or construction engineering services for the Village Project;
iii. Not paid by the Village or its consultant(s) and/or contractor(s);
iv. Of a regular and continuing nature, including, but not limited to, administrative costs, staff and overhead costs, rent, utilities, and maintenance costs;
v. Incurred without the consent of the County after the County has given the Village written notice of suspension or termination of any or all of the County's obligations under this Agreement; and/or
vi. In excess of the County's maximum financial contribution under this Agreement, as set forth in Section III.A. above.

E. **Substitutions/Substitute Work.** Either Party may request in writing that work or materials be substituted with different work or materials. Provided that the substitute work and/or materials do not unreasonably delay the Village Project schedule, the Village

shall cause said substitute work and/or materials to be included in the Village Project. Each Party shall pay the costs of substitutions for their associated work items.

F. Additional Work. Either Party may request in writing that additional work be added to the Village Project. Provided that the additional work does not unreasonably delay the Village Project schedule or increase the cost of the Village Project to exceed the County's maximum cost participation as set forth in Section III.A., the Village shall cause said additional work to be included in the Village Project. Additional work shall be paid for by force account or agreed unit price. Each Party will pay the costs of additional work for their associated work items.

G. Funding Breakdown. A funding breakdown is incorporated into and made a part of this Agreement and attached as Exhibit A.

IV. GENERAL CONDITIONS

A. Authority to Execute. The Parties have read and reviewed the terms of this Agreement and by their signatures as affixed below represent that the signing party has the authority to execute this Agreement and that the Parties intend to be bound by the terms and conditions contained herein.

B. Binding Successors. This Agreement shall be binding upon and inure to the benefit of the Parties and their respective successors and approved assigns.

C. Compliance with Laws, Rules and Regulations. The Parties shall at all times observe and comply with all federal, state and local laws and regulations, as amended from time to time, in carrying out the terms and conditions of this Agreement.

D. Conflicts of Interest. The Village understands and agrees that no director, officer, agent, or employee of the Village may have an interest, whether directly or indirectly, in any contract or agreement or the performance of any work pertaining to this Agreement; represent, either as an agent or otherwise, any person, trust, or corporation, with respect to any application or bid for any contract or agreement or work pertaining to this Agreement; or take, accept, or solicit, either directly or indirectly, any money or thing of value as a gift or bribe or means of influencing their vote or actions. Any contract or agreement made and procured in violation of this provision is void and no funds under this Agreement may be used to pay any cost under such a contract or agreement.

E. Conflict with Exhibits. In the event of a conflict between any exhibit attached hereto and the text of this Agreement, the text of this Agreement shall control.

F. Counterparts. This Agreement may be executed in two (2) or more counterparts, each of which shall be deemed an original and all of which shall be deemed one and the same instrument.

G. County Section Number. The Project is hereby designated as County section number 22-PRPN1-00-PV . The Parties shall include County section number 22-PRPN1-00-PV on all

project- related submittals, including, but not limited to, written correspondence and invoices.

H. **Designation of Representatives**. Not later than fourteen (14) calendar days after the Effective Date of this Agreement, as defined in Section IV.J. below, each Party shall designate in writing a full-time representative for the carrying out of this Agreement. Each representative shall have the authority, on behalf of the respective Party, to make decisions relating to the work covered by this Agreement. Representatives may be changed, from time to time, by subsequent written notice. Each representative shall be readily available to the other.

I. **Disputes**. In the event of any dispute, claim, question or disagreement arising out of the performance of this Agreement, the Parties shall consult and negotiate with each other in good faith to settle the dispute, claim, question or disagreement. In the event the Parties cannot mutually agree on the resolution of the dispute, claim, question or disagreement, the decision of the Department's Superintendent shall be final.

J. **Effective Date**. The Effective Date of this Agreement shall be the date that the last authorized signatory signs and dates this Agreement. This Agreement shall become effective only in the event the corporate authorities of each Party approve this Agreement.

K. **Entire Agreement**. This Agreement constitutes the entire agreement of the Parties concerning all matters specifically covered by this Agreement and supersedes all prior written and oral agreements, commitments and understandings among the Parties. There are no representations, covenants, promises or obligations not contained in this Agreement that form any part of this Agreement or upon which any of the Parties is relying upon in entering into this Agreement.

L. **Force Majeure**. Neither Party shall be liable for any delay or non-performance of its obligations hereunder by any contingency reasonably beyond its control, including, but not limited to, acts of God, war, civil unrest, labor strikes or walkouts, fires, pandemics and/or natural disasters.

M. **Inactivity**. The County may terminate this Agreement if construction work for the Village Project has not commenced within eighteen (18) months after the Effective Date of this Agreement.

N. **Liability**. Subject to Section II.D. herein, no official, officer, employee, attorney, agent or assign of either Party shall be liable for any negligent or wrongful act chargeable to the other unless such liability is imposed by a court of competent jurisdiction. The County assumes no liability for the actions of the Village and its officials, officers, employees, attorneys or agents under this Agreement. The Village assumes no liability for the actions of the County and its officials, officers, employees, attorneys or agents under this Agreement. Each Party agrees to be solely responsible for liability, suits, losses, judgments, damages or other demands imposed upon it as a result of its own actions or omissions in the performance of its obligations specified in this Agreement. This Agreement shall not be construed as seeking to enlarge or diminish any obligation or duty

owed by one Party against the other or against third parties. In the event of a claim for any wrongful or negligent act, each Party shall bear the cost of its own defense.

O. **Modification.** This Agreement may only be modified by a written instrument executed by the Department's Superintendent and an authorized representative of the Village.

P. **Notices.** Unless otherwise specified, all reports, notices and other communications related to this Agreement shall be in writing and shall be personally delivered or mailed via first class, certified or registered U.S. Mail or electronic mail delivery to the following persons at the following addresses:

To the COUNTY:
Jennifer "Sis" Killen, P.E., PTOE
Superintendent
Cook County Department of Transportation and Highways
69 W. Washington Street, 24th Floor
Chicago, IL 60602
E-mail: Jennifer.Killen@cookcountyil.gov

To the VILLAGE:
Jack Bielak, P.E., CFM
Village Engineer
Village of Northbrook
1225 Cedar Lane
Northbrook, IL 60062
E-mail: jack.bielak@northbrook.il.us

Q. **Recitals.** The introductory recitals included at the beginning of this Agreement are agreed to and incorporated into and made a part of this Agreement.

R. **Records Maintenance.** The Village shall maintain during the term of this Agreement and for a period of three (3) years thereafter complete and adequate financial records, accounts and other records to support all Village Project expenditures. These records and accounts will include, but not be limited to, records providing a full description of each activity being assisted with County funds; a general ledger that supports the costs being charged to the County; records documenting procurement of goods and services; contracts for goods and services; invoices; billing statements; cancelled checks; bank statements; schedules containing comparisons of budgeted amounts and actual expenditures; and construction progress schedules.

S. **Reviews and Audits.** The Village shall give the County access to all books, accounts, records, reports and files pertaining to the administration, receipt and use of County funds under this Agreement to necessitate any reviews or audits.

T. **Section Headings.** The descriptive section and subsection headings used in this Agreement are for convenience only and shall not control or affect the meaning or construction of any of the provisions thereof.

U. **Severability.** If any term of this Agreement is to any extent illegal, otherwise invalid, or incapable of being enforced, such term shall be excluded to the extent of such invalidity

or unenforceability; all other terms hereof shall remain in full force and effect; and, to the extent permitted and possible, the invalid or unenforceable term shall be deemed replaced by a term that is valid and enforceable and that comes closest to expressing the intention of such invalid or unenforceable term.

V. **Suspension; Early Termination**. Subject to Section IV.L. above, if the County determines that the Village has not complied with or is not complying with, has failed to perform or is failing to perform, has not met or is not meeting significant project milestones or objectives, or is in default under any of the provisions of this Agreement, whether due to failure or inability to perform or any other cause whatsoever, the County, after written notification to the Village of said non-compliance or default and failure by the Village to correct said violations within sixty (60) calendar days, may:

   i. Suspend or terminate this Agreement in whole or in part by written notice, and/or;
   ii. Demand refund of any funds disbursed to the Village;
   iii. Temporarily withhold payments pending correction of deficiencies by the Village;
   iv. Disallow all or part of the cost of the activity or action not in compliance; or
   v. Take other remedies legally available.

W. **Termination**. Unless otherwise agreed to by the Parties in writing, this Agreement terminates upon completion of the Village Project and final reimbursement by the County, or November 30, 2026, whichever date is earlier.

X. **Venue and Applicable Law**. All questions of interpretation, construction and enforcement, and all controversies with respect to this Agreement, will be governed by the applicable constitutional, statutory and common law of the State of Illinois. The Parties agree that, for the purposes of any litigation relative to this Agreement and its enforcement, venue will be in the Circuit Court of Cook County, Illinois or the Northern District, Eastern Division of the United States District Court, Chicago, Illinois, and the Parties consent to the *in personam* jurisdiction of said Courts for any such action.

Y. **Waiver of Default**. The failure by the County or Village to seek redress for violation of or to insist upon strict performance of any condition or covenant of this Agreement shall not constitute a waiver of any such breach or subsequent breach of such covenants, terms, conditions, rights and remedies. No provision of this Agreement shall de deemed waived by the County or Village unless such provision is waived in writing.

(signature page to follow)

IN WITNESS WHEREOF, the Parties have executed this Agreement on the dates indicated.

EXECUTED BY COUNTY OF COOK:

Toni Preckwinkle
President
Cook County Board of Commissioners

This _____ day of _____, _____

ATTEST: _____
County Clerk

EXECUTED BY VILLAGE OF NORTHBROOK:

Kathryn L. Ciesla
Village President

This 9th day of May, 2024

ATTEST: _____
Village Clerk

RECOMMENDED BY:

Jennifer "Sis" Killen, P.E., PTOE
Superintendent
County of Cook
Department of Transportation and Highways

APPROVED AS TO FORM:
Kimberly M. Foxx, State's Attorney

By: _____
Assistant State's Attorney

APPROVED
BY THE BOARD OF COOK COUNTY COMMISSIONERS

JUL 25 2024

COM _____

EXHIBIT A

Funding Breakdown for
"Village Project"

ITEM	VILLAGE SHARE	COUNTY SHARE
Construction	0%	100%
Construction Engineering	0%	100% (to be calculated as 10% of actual construction costs)

NOTE: The County's maximum cost participation under this Agreement shall not exceed $55,000.

I, CEDRIC GILES, County Interim Clerk of Cook County, in the State of Illinois aforesaid and keeper of the records and files of said Cook County, do hereby certify that The Board of Commissioners of The County of Cook, at their regular meeting held on July, 25, 2024, passed the following Resolution:

24-R-

RESOLUTION

Sponsored by

THE HONORABLE TONI PRECKWINKLE

PRESIDENT OF THE COOK COUNTY BOARD OF COMMISSIONERS

RESOLVED, by the members of The Board of Commissioners of Cook County, Illinois, on behalf of the County of Cook, to authorize and direct its President to execute, by original signature or authorized signature stamp, two (2) copies of an Intergovernmental Agreement with the Village of Northbrook, said Agreement attached, wherein the Village will be the lead agency for sidewalk and ramp removal, installation, and miscellaneous drainage work at various locations along Landwehr Road from Hampton Court to Dundee Road; that the County of Cook will pay for the construction and construction engineering costs incurred by the Village and shall reimburse the Village for its share of said costs (total County share up to, but not to exceed $55,000.00) under County Section: 22-PRPN1-00-PV; and, the Department of Transportation and Highways is authorized and directed to return one (1) executed copy of the Agreement with a certified copy of this Resolution to the Village of Northbrook and implement the terms of the Agreement.

All of which appears from the records and files of my office.

IN WITNESS WHEREOF I have hereunto set my hand and affixed the SEAL of said County at my office in the City of Chicago, in said County, this 25th day of July A.D. 2024.

(SEAL)

County Interim Clerk

APPROVED
BY THE BOARD OF COOK COUNTY COMMISSIONERS

JUL 25 2024

COM _____

From: Bulent Agar (DOTH) <Bulent.Agar@cookcountyil.gov>
Sent: Thursday, February 6, 2025 3:52 PM
To: Weller, Michael; Beladi, Aram
Cc: Nicholas Kasmar (DOTH); Noel Basquin (DOTH); Jennifer Killen (DOTH)
Subject: RE: 22-PRPN1-00-PV Bid Results

Beware External Email - Think Before You Act

Good afternoon,

We at DOTH discussed this internally. Per our conversation last week, Northbrook is planning to provide CM for the project, which helps the bottom-line. That makes the difference $6,766.05 (Bid amount - $55,000). DOTH is willing to cover this difference, and as long as the difference is within a reasonable amount based on actual costs once the project is complete. We do not have an objection to Northbrook awarding this contract. Please send your invoices once the project is complete for reimbursement.

Thanks and please let us know if you have any questions.

Bulent

Bulent Agar, P.E.
He/Him
Deputy Bureau Chief of Design
Department of Transportation & Highways
O: (312) 603-1665

Sign up for our newsletter to receive email updates.

Follow Cook County Government on Facebook | X | Instagram
Follow Toni Preckwinkle on Facebook | X | Instagram

From: Weller, Michael <Michael.Weller@northbrook.il.us>
Sent: Thursday, January 30, 2025 10:30 AM
To: Bulent Agar (DOTH) <Bulent.Agar@cookcountyil.gov>; Beladi, Aram <Aram.Beladi@northbrook.il.us>
Cc: Nicholas Kasmar (DOTH) <Nicholas.Kasmar@cookcountyil.gov>; Noel Basquin (DOTH) <Noel.Basquin@cookcountyil.gov>; Jennifer Killen (DOTH) <Jennifer.Killen@cookcountyil.gov>
Subject: RE: 22-PRPN1-00-PV Bid Results

External Message Disclaimer

This message originated from an external source. Please use proper judgment and caution when opening attachments, clicking links, or responding to this email.

MEMORANDUM

To: Village Manager Cara Pavlicek
From: Director of Public Works Kelly Hamill
Date: 2025-08-12
Subject: A Resolution Approving an Agreement for the 2025 Sidewalk Replacement Program with Schroeder and Schroeder, Inc. of Skokie, Illinois

Overview

The Village systematically surveys public sidewalks to identify locations to install Americans with Disabilities Act (ADA) required ramps at intersections and replace sidewalk squares and/or sections that are deemed defective and/or deteriorated and potentially create a hazard. In addition select curbs adjacent to the sidewalks may be replaced.

Fiscal Impact

The base bid for this project is $377,900 and based on estimated quantities. Staff recommends including a 10% contingency in the amount of $37,000 for unforeseen conditions and to address any other sidewalk adjacent to the project area because of the favorable pricing the Village has received, for a total not to exceed spending authority of $414,900. Funds for this work have been included in the Account No. 40-7400-722-02 (Capital Infrastructure Fund).

Acct. Name	Acct. Number	Budget	Available	Requested	Remaining	Within Budget?
Sidewalk Construction	40-7400-722-02	$574,117	$574,117	$414,900	$159,217	Yes

Recommendation

Approval.

Background

In February 2025, staff assembled bid packages for the 2025 Sidewalk Replacement Program. The areas identified for sidewalk work are included as supplemental information. These areas include the Northbrook Manor subdivision (neighborhood sidewalks) and Lake Cook Road and Skokie Boulevard (arterial sidewalks). The bid document requested separate pricing for neighborhood and arterial sidewalk work to account for extra traffic control effort. Six bids were received and opened on Thursday, April 3, 2025. The bids are summarized below in Table 1.

Table 1 - Summary of Bids	
Contractor	**Bid Total**
Schroeder and Schroeder Concrete	$377,900.00
Miller Pipeline	$398,904.02
Globe Construction	$399,962.50
M&J Asphalt Paving	$446,605.00
Everlast Blacktop	$475,702.50
Alliance Contractors	$821,515.00

Staff determined that Schroeder & Schroeder, Inc. of Skokie, Illinois (the “Contractor”) submitted the lowest, most responsive bid. The Contractor has been the Village’s contractor for sidewalk work under previous contracts, and staff is confident that the Contractor can successfully complete the work as specified. Staff recommends Village Board approval of a Resolution authorizing a contract with Schroeder & Schroeder, Inc. of Skokie, Illinois in the not to exceed amount of $414,900 for the 2025 Sidewalk Replacement project.

The Village of Northbrook systematically surveys public sidewalks to identify defective and deteriorated sections that may potentially create a hazard for the Village. Tree roots that encroach sections of sidewalk, winter freeze/thaw cycles and de-icing materials are the primary cause of sidewalk deterioration. In addition to the replacement of failed sidewalk squares, the Village also installs Americans with Disabilities Act (ADA) required ramps at intersections and replaces select curbs adjacent to the sidewalks. Beginning in Fiscal Year 2019/20, the Village has dedicated funding toward the removal and replacement of sidewalk on arterial roadways (non-Village owned streets) in the Village. Sidewalk replacement on higher traffic volume arterial roadways is important to maintaining an accessible network for bicyclists and pedestrians as outlined in the Master Bicycle and Pedestrian Plan. This work requires that the contractor provide additional traffic control and protection to ensure motorists can safely navigate around sidewalk construction equipment and vehicles making replacement along these roads, that are often owned and maintained by other agencies, more expensive.

Staff will be present at the Village Board meeting to address any questions that may arise.

A Resolution Approving an Agreement for the 2025 Sidewalk Replacement Program with Schroeder & Schroeder, Inc. of Skokie, Illinois
Exhibit A - Contract for 2025 Sidewalk Replacement Program
Supplemental Information - Project Location Maps

Resolution 2025-_____

BE IT RESOLVED by the President and Board of Trustees of the Village of Northbrook, County of Cook and State of Illinois, THAT:

A Resolution Approving an Agreement for the 2025 Sidewalk Replacement Program with Schroeder & Schroeder, Inc. of Skokie, Illinois

is hereby adopted, as follows:

Section 1. Recitals.

The Village's adopted Fiscal Year 2025/26 Budget provides for continuation of the Village's sidewalk removal and replacement program, which also includes installation of ADA handicap ramps at certain intersections, curb replacement, and related Village sidewalk work ("***Program***").

Public Works staff prepared specifications and bid documents for the Program and advertised them. Six sealed bids were received, publicly opened and read on Thursday, April 3, 2025. Schroeder & Schroeder, Inc. of Skokie, Illinois ("***Contractor***") submitted a total bid in the amount of $377,900. Staff recommends including a contingency of 10% ($37,000) for a total not to exceed award of $414,900. The contingency will be used for any unforeseen work and to address any additional sidewalk that is in need of replacement adjacent to the Program area. The Contractor has successfully completed many concrete street and sidewalk maintenance projects for the Village in the past and staff has been satisfied with their work.

The Village's Annual Budget for Fiscal Year 2025/26 provides funds in Account No. 40-7400-722-02 (Infrastructure Capital Fund - Sidewalk Construction) for this year's Program. Based on these factors, Village staff recommends entering into a contract between the Village and the Contractor for the Program in a total not to exceed amount of $414,900 ("***Contract***").

The President and the Board of Trustees have considered the Contract and determined that it is in the best interests of the Village and the public to enter into the Contract.

Section 2. Approval of the Contract

The Contract for the 2025/26 Fiscal Year Sidewalk Replacement Program with the Contractor is hereby, approved in a form acceptable to the Village Manager and Village Attorney.

Section 3. Authorization to Execute Contract

The Village Manager shall be, and is hereby, authorized and directed to execute and seal, on behalf of the Village, the Contract only after receipt by the Village Clerk of at least three original copies of the Contract executed by the Contractor and compliance by the Contractor with the conditions precedent to closing; provided, however, that if such requirements are not met by within 21 days after the date of adoption of this Resolution, then this authority to execute and seal shall, at the option of the President and Board of Trustees, be null and void.

Section 4. Authorization to Execute Change Orders.

The Village Manager is authorized to execute one or more Contract Change Orders for additional work consisting of additional unforeseen items of work related to, or arising from other work contemplated by, the scope of work in the Contract in the amount of $37,000 subject to the Village Manager making the necessary determination that the work contemplated by the change order complies with Section 33E-9 of Article 33E of the Criminal Code of 1961 and placing a copy of such determinations in the Contract file.

Adopted:

RESULT:
MOVER:
SECONDER:
AYES:
ABSTAIN:
ABSENT:

ATTEST:

_____
Village President

_____
Village Clerk

CONTRACT BETWEEN

VILLAGE OF NORTHBROOK

AND

SCHROEDER AND SCHROEDER, INC.

FOR THE 2025 SIDEWALK

REMOVAL AND REPLACEMENT PROJECT

CONTRACT BETWEEN

VILLAGE OF NORTHBROOK

AND

SCHROEDER AND SCHROEDER, INC.

FOR THE 2025 SIDEWALK

REMOVAL AND REPLACEMENT PROJECT

TABLE OF CONTENTS

			Page
ARTICLE I	**THE WORK**		4
	1.1	Performance of the Work	4
	1.2	Commencement and Completion Dates	5
	1.3	Required Submittals	5
	1.4	Review and Interpretation of Contract Provisions	6
	1.5	Conditions at the Work Site; Record Drawings	6
	1.6	Technical Ability to Perform	7
	1.7	Financial Ability to Perform	7
	1.8	Time	7
	1.9	Safety at the Work Site	7
	1.10	Cleanliness of the Work Site and Environs	8
	1.11	Damage to the Work, the Work Site & Other Property	8
	1.12	Subcontractors and Suppliers	8
	1.13	Simultaneous Work By Others	9
	1.14	Occupancy Prior to Final Acceptance	9
	1.15	Owner's Right to Terminate or Suspend Work for Convenience	9
ARTICLE II	**CHANGES AND DELAYS**		10
	2.1	Changes	10
	2.2	Delays	10
ARTICLE III	**CONTRACTOR'S RESPONSIBILITY FOR DEFECTIVE WORK**		10
	3.1	Inspection; Testing; Correction of Defects	10
	3.2	Warranty of Work	11
	3.3	Owner's Right to Correct	11
ARTICLE IV	**FINANCIAL ASSURANCES**		12
	4.1	Bonds	12
	4.2	Insurance	12
	4.3	Indemnification	12

ARTICLE V PAYMENT 12

5.1 Contract Price 12
5.2 Taxes and Benefits 13
5.3 Progress Payments 13
5.4 Final Acceptance and Final Payment 13
5.5 Liens 14
5.6 Deductions 15

ARTICLE VI DISPUTES AND REMEDIES 15

6.1 Dispute Resolution Procedure 15
6.2 Contractor's Remedies 16
6.3 Owner's Remedies 16
6.4 Owner's Special Remedy for Delay 17
6.5 Terminations and Suspensions Deemed for Convenience 17

ARTICLE VII LEGAL RELATIONSHIPS AND REQUIREMENTS 17

7.1 Binding Effect 17
7.2 Relationship of the Parties 18
7.3 No Collusion 18
7.4 Assignment 18
7.5 Confidential Information 18
7.6 No Waiver 18
7.7 No Third Party Beneficiaries 18
7.8 Notices 19
7.9 Governing Laws 19
7.10 Changes in Laws 19
7.11 Compliance with Laws and Grants 19
7.12 Compliance with Patents 20
7.13 Time 21
7.14 Severability 21
7.15 Entire Agreement 21
7.16 Amendments 21

CONTRACTOR'S CERTIFICATION

ATTACHMENT A - Supplemental Schedule of Contract Terms

ATTACHMENT B - Specifications

ATTACHMENT C - List of Drawings

ATTACHMENT D - Special Project Requirements

APPENDIX 1 - Prevailing Wage Ordinance

PERFORMANCE BOND

LABOR AND MATERIAL PAYMENT BOND

CONTRACT BETWEEN

VILLAGE OF NORTHBROOK

AND

SCHROEDER AND SCHROEDER, INC.

FOR THE 2025 SIDEWALK

REMOVAL AND REPLACEMENT PROJECT

In consideration of the mutual promises set forth below, the Village of Northbrook, 1225 Cedar Lane, Northbrook, Illinois 60062, a home rule municipal corporation ("Owner"), and Schroeder & Schroeder, Inc., 7306 Central Park, Skokie, Illinois 60076, a Corporation ("Contractor"), make this Contract as of the 20th day of February, 2025, and hereby agree as follows:

ARTICLE I

THE WORK

1.1 Performance of the Work

Contractor shall, at its sole cost and expense, provide, perform, and complete all of the following, all of which is herein referred to as the "Work":

1. Labor, Equipment, Materials, and Supplies. Provide, perform, and complete, in the manner described and specified in this Contract, all necessary work, labor, services, transportation, equipment, materials, apparatus, machinery, tools, fuels, gas, electric, water, waste disposal, information, data, and other means and items necessary to accomplish the Project at the Work Site, both as defined in Attachment A, in accordance with the specifications attached hereto as Attachment B, the drawings identified in the list attached hereto as Attachment C, and the Special Project Requirements attached hereto as Attachment D.

2. Permits. Except as otherwise provided in Attachment A, procure and furnish all permits, licenses, and other governmental approvals and authorizations necessary in connection therewith.

3. Bonds and Insurance. Procure and furnish all Bonds and all certificates and policies of insurance specified in this Contract.

4. Taxes. Pay all applicable federal, state, and local taxes.

5. Miscellaneous. Do all other things required of Contractor by this Contract, including, without limitation, arranging for utility and other services needed for the Work and for testing, including the installation of temporary utility lines, wiring, switches, fixtures,

hoses, connections, and meters, and providing sufficient sanitary conveniences and shelters to accommodate all workers and all personnel of Owner engaged in the Work.

6. Quality. Provide, perform and complete all of the foregoing in a proper and workmanlike manner, consistent with the highest standards of professional and construction practices and in full compliance with, and as required by or pursuant to, this Contract, and with the greatest economy, efficiency, and expedition consistent therewith, with only new, undamaged and first quality equipment, materials and supplies.

1.2 Commencement and Completion Dates

Contractor shall commence the Work not later than the "Commencement Date" set forth on Attachment A and shall diligently and continuously prosecute the Work at such a rate as will allow the Work to be fully provided, performed, and completed in full compliance with this Contract not later than the "Completion Date" set forth in Attachment A. The time of commencement, rate of progress, and time of completion are referred to in this Contract as the "Contract Time."

1.3 Required Submittals

A. Submittals Required. Contractor shall submit to Owner all documents, data, and information specifically required to be submitted by Contractor under this Contract and shall, in addition, submit to Owner all such drawings, specifications, descriptive information, and engineering documents, data, and information as may be required, or as may be requested by Owner, to show the details of the Work, including a complete description of all equipment, materials, and supplies to be provided under this Contract ("Required Submittals"). Such details shall include, but shall not be limited to, design data, structural and operating features, principal dimensions, space required or provided, clearances required or provided, type and brand of finish, and all similar matters, for all components of the Work.

B. Number and Format. Contractor shall provide three complete sets for each Required Submittal. All Required Submittals, except drawings, shall be prepared on white 8-1/2 inch by 11 inch paper. Two blueline prints and one sepia transparency of each drawing shall be provided. All prints of drawings shall be folded to 8-1/2 inches by 11 inches, or less. All drawings shall be clearly marked in the lower right-hand corner with the names of Owner and Contractor.

C. Time of Submission and Owner's Review. All Required Submittals shall be provided to Owner no later than the time, if any, specified in this Contract for their submission or, if no time for submission is specified, in sufficient time, in Owner's sole opinion, to permit Owner to review the same prior to the commencement of the part of the Work to which they relate and prior to the purchase of any equipment, materials, or supplies that they describe. Owner shall have the right to require such corrections as may be necessary to make such submittals conform to this Contract. All such submittals shall, after final processing and review with no exception noted by Owner, become a part of this Contract. No Work related to any submittal shall be performed by Contractor until Owner has completed review of such submittal with no exception noted. Owner's review and stamping of any Required Submittal shall be for the sole purpose of examining the general management, design, and details of the proposed Work, shall not

relieve Contractor of the entire responsibility for the performance of the Work in full compliance with, and as required by or pursuant to this Contract, and shall not be regarded as any assumption of risk or liability by Owner.

D. Responsibility for Delay. Contractor shall be responsible for any delay in the Work due to delay in providing Required Submittals conforming to this Contract.

1.4 Review and Interpretation of Contract Provisions

Contractor represents and warrants that it has carefully reviewed this Contract, including all of its Attachments and the drawings identified in Attachment C, all of which are by this reference incorporated into and made a part of this Contract. Contractor shall, at no increase in the Contract Price, provide workmanship, equipment, materials, and supplies that fully conform to this Contract. Whenever any equipment, materials or supplies are specified or described in this Contract by using the name or other identifying feature of a proprietary product or the name or other identifying feature of a particular manufacturer or vendor, the specific item mentioned shall be understood as establishing the type, function and quality desired. Other manufacturers' or vendors' products may be accepted, provided that the products proposed are equivalent in substance and function to those named as determined by Owner in its sole and absolute discretion.

Contractor shall promptly notify Owner of any discrepancy, error, omission, ambiguity, or conflict among any of the provisions of this Contract before proceeding with any Work affected thereby. If Contractor fails to give such notice to Owner, then the subsequent decision of Owner as to which provision of this Contract shall govern shall be final, and any corrective work required shall not entitle Contractor to any damages, to any compensation in excess of the Contract Price, or to any delay or extension of the Contract Time.

When the equipment, materials, or supplies furnished by Contractor cannot be installed as specified in this Contract, Contractor shall, without any increase in the Contract Price, make all modifications required to properly install the equipment, materials, or supplies. Any such modification shall be subject to the prior review and consent of Owner.

1.5 Conditions at the Work Site; Record Drawings

Contractor represents and warrants that it has had a sufficient opportunity to conduct a thorough investigation of the Work Site and the surrounding area and has completed such investigation to its satisfaction. Contractor shall have no claim for damages, for compensation in excess of the Contract Price, or for a delay or extension of the Contract Time based upon conditions found at, or in the vicinity of, the Work Site. When information pertaining to subsurface, underground or other concealed conditions, soils analysis, borings, test pits, utility locations or conditions, buried structures, condition of existing structures and other investigations is or has been provided by Owner, or is or has been otherwise made available to Contractor by Owner, such information is or has been provided or made available solely for the convenience of Contractor and is not part of this Contract. Owner assumes no responsibility whatever in respect to the sufficiency or accuracy of such information, and there is no guaranty or warranty, either expressed or implied, that the conditions indicated are representative of those existing throughout the Work or the Work Site, or that the conditions indicated are representative of those existing at any particular location, or that the conditions indicated may not change, or that unanticipated conditions may not be present.

Contractor shall be solely responsible for locating all existing underground installations by prospecting no later than two workdays prior to any scheduled excavation or trenching, whichever is earlier. Contractor shall check all dimensions, elevations, and quantities indicated in this Contract within the same time period as set forth above for prospecting underground installations. Contractor shall lay out the Work in accordance with this Contract and shall establish and maintain such locations, lines and levels. Wherever pre-existing work is encountered, Contractor shall verify and be responsible for dimensions and location of such pre-existing work. Contractor shall notify Owner of any discrepancy between the dimensions, elevations and quantities indicated in this Contract and the conditions of the Work Site or any other errors, omissions or discrepancies which Contractor may discover during such inspections. Full instructions will be furnished by Owner should such error, omission, or discrepancy be discovered, and Contractor shall carry out such instructions as if originally specified and without any increase in Contract Price.

Before Final Acceptance of the Work, Contractor shall submit to Owner two sets of Drawings of Record, unless a greater number is specified elsewhere in this Contract, indicating all field deviations from Attachment B or the drawings identified in Attachment C.

1.6 Technical Ability to Perform

Contractor represents and warrants that it is sufficiently experienced and competent, and has the necessary capital, facilities, plant, organization, and staff, to provide, perform and complete the Work in full compliance with, and as required by or pursuant to, this Contract.

1.7 Financial Ability to Perform

Contractor represents and warrants that it is financially solvent, and Contractor has the financial resources necessary to provide, perform and complete the Work in full compliance with, and as required by or pursuant to, this Contract.

1.8 Time

Contractor represents and warrants that it is ready, willing, able and prepared to begin the Work on the Commencement Date and that the Contract Time is sufficient time to permit completion of the Work in full compliance with, and as required by or pursuant to, this Contract for the Contract Price, all with due regard to all natural and man-made conditions that may affect the Work or the Work Site and all difficulties, hindrances, and delays that may be incident to the Work.

1.9 Safety at the Work Site

Contractor shall be solely and completely responsible for providing and maintaining safe conditions at the Work Site, including the safety of all persons and property during performance of the Work. This requirement shall apply continuously and shall not be limited to normal working hours. Contractor shall take all safety precautions as shall be necessary to comply with all applicable laws and to prevent injury to persons and damage to property.

Contractor shall conduct all of its operations without interruption or interference with vehicular and pedestrian traffic on public and private rights-of-way, unless it has obtained permits therefor from the proper authorities. If any public or private right-of-way shall be

rendered unsafe by Contractor's operations, Contractor shall make such repairs or provide such temporary ways or guards as shall be acceptable to the proper authorities.

1.10 Cleanliness of the Work Site and Environs

Contractor shall keep the Work Site and adjacent areas clean at all times during performance of the Work and shall, upon completion of the Work, leave the Work Site and adjacent areas in a clean and orderly condition.

1.11 Damage to the Work, the Work Site, and Other Property

The Work and everything pertaining thereto shall be provided, performed, completed, and maintained at the sole risk and cost of Contractor from the Commencement Date until Final Payment. Contractor shall be fully responsible for the protection of all public and private property and all persons. Without limiting the foregoing, Contractor shall, at its own cost and expense, provide all permanent and temporary shoring, anchoring and bracing required by the nature of the Work in order to make all parts absolutely stable and rigid, even when such shoring, anchoring and bracing is not explicitly specified, and support and protect all buildings, bridges, roadways, conduits, wires, water pipes, gas pipes, sewers, pavements, curbs, sidewalks, fixtures and landscaping of all kinds and all other public or private property that may be encountered or endangered in providing, performing and completing the Work. Contractor shall have no claim against Owner because of any damage or loss to the Work or to Contractor's equipment, materials, or supplies from any cause whatsoever, including damage or loss due to simultaneous work by others. Contractor shall, promptly and without charge to Owner, repair or replace, to the satisfaction of Owner, any damage done to, and any loss suffered by, the Work and any damage done to, and any loss suffered by, the Work Site or other property as a result of the Work. Notwithstanding any other provision of this Contract, Contractor's obligations under this Section shall exist without regard to, and shall not be construed to be waived by, the availability or unavailability of any insurance, either of Owner or Contractor, to indemnify, hold harmless, or reimburse Contractor for the cost of any repair or replacement work required by this Section.

1.12 Subcontractors and Suppliers

A. Approval and Use of Subcontractors and Suppliers. Contractor shall perform the Work with its own personnel and under the management, supervision, and control of its own organization unless otherwise approved by Owner in writing. All subcontractors, suppliers, and subcontracts used by Contractor shall be acceptable to, and approved in advance by, Owner. Owner's approval of any subcontractor, supplier, and subcontract shall not relieve Contractor of full responsibility and liability for the provision, performance, and completion of the Work in full compliance with, and as required by or pursuant to, this Contract. All Work performed under any subcontract shall be subject to all of the provisions of this Contract in the same manner as if performed by employees of Contractor. Every reference in this Contract to "Contractor" shall be deemed also to refer to all subcontractors and suppliers of Contractor. Every subcontract shall include a provision binding the subcontractor or supplier to all provisions of this Contract.

B. Removal of Subcontractors and Suppliers. If any subcontractor or supplier fails to perform the part of the Work undertaken by it in a manner satisfactory to Owner, Contractor shall immediately upon notice from Owner terminate such subcontractor or

supplier. Contractor shall have no claim for damages, for compensation in excess of the Contract Price, or for a delay or extension of the Contract Time as a result of any such termination.

1.13 Simultaneous Work By Others

Owner shall have the right to perform or have performed such other work as Owner may desire in, about, or near the Work Site during the performance of the Work by Contractor. Contractor shall make every reasonable effort to perform the Work in such manner as to enable both the Work and such other work to be completed without hindrance or interference from each other. Contractor shall afford Owner and other contractors reasonable opportunity for the execution of such other work and shall properly coordinate the Work with such other work.

1.14 Occupancy Prior to Final Payment

Owner shall have the right, at its election, to occupy, use, or place in service any part of the Work prior to Final Payment. Such occupancy, use, or placement in service shall be conducted in such manner as not to damage any of the Work or to unreasonably interfere with the progress of the Work. No such occupancy, use, or placement in service shall be construed as an acceptance of any of the Work or a release or satisfaction of Contractor's duty to insure and protect the Work, nor shall it, unless conducted in an unreasonable manner, be considered as an interference with Contractor's provision, performance, or completion of the Work.

1.15 Owner's Right to Terminate or Suspend Work for Convenience

A. Termination or Suspension for Convenience. Owner shall have the right, for its convenience, to terminate or suspend the Work in whole or in part at any time by written notice to Contractor. Every such notice shall state the extent and effective date of such termination or suspension. On such effective date, Contractor shall, as and to the extent directed, stop Work under this Contract, cease all placement of further orders or subcontracts, terminate or suspend Work under existing orders and subcontracts, cancel any outstanding orders or subcontracts that may be cancelled, and take any action necessary to protect any property in its possession in which Owner has or may acquire any interest and to dispose of such property in such manner as may be directed by Owner.

B. Payment for Completed Work. In the event of any termination pursuant to Subsection 1.15A above, Owner shall pay Contractor (1) such direct costs, excluding overhead, as Contractor shall have paid or incurred for all Work done in compliance with, and as required by or pursuant to, this Contract up to the effective date of termination together with ten percent of such costs for overhead and profit; and (2) such other costs pertaining to the Work, exclusive of overhead and profit, as Contractor may have reasonably and necessarily incurred as the result of such termination. Any such payment shall be offset by any prior payment or payments and shall be subject to Owner's rights to withhold and deduct as provided in this Contract.

ARTICLE II

CHANGES AND DELAYS

2.1 Changes

Owner shall have the right, by written order executed by Owner, to make changes in the Contract, the Work, the Work Site, and the Contract Time ("Change Order"). If any Change Order causes an increase or decrease in the amount of the Work, an equitable adjustment in the Contract Price or Contract Time may be made. All claims by Contractor for an equitable adjustment in either the Contract Price or the Contract Time shall be made within two business days following receipt of such Change Order, and shall, if not made prior to such time, be conclusively deemed to have been waived. No decrease in the amount of the Work caused by any Change Order shall entitle Contractor to make any claim for damages, anticipated profits, or other compensation.

2.2 Delays

A. Extensions for Unavoidable Delays. For any delay that may result from causes that could not be avoided or controlled by Contractor, Contractor shall, upon timely written application, be entitled to issuance of a Change Order providing for an extension of the Contract Time for a period of time equal to the delay resulting from such unavoidable cause. No extension of the Contract Time shall be allowed for any other delay in completion of the Work.

B. No Compensation for Delays. No payment, compensation, damages, or adjustment of any kind, other than the extension of the Contract Time provided in Subsection 2.2A above, shall be made to, or claimed by, Contractor because of hindrances or delays from any cause in the commencement, prosecution, or completion of the Work, whether caused by Owner or any other party and whether avoidable or unavoidable.

ARTICLE III

CONTRACTOR'S RESPONSIBILITY FOR DEFECTIVE WORK

3.1 Inspection; Testing; Correction of Defects

A. Inspection. Until Final Payment, all parts of the Work shall be subject to inspection and testing by Owner or its designated representatives. Contractor shall furnish, at its own expense, all reasonable access, assistance, and facilities required by Owner for such inspection and testing.

B. Re-inspection. Re-inspection and re-testing of any Work may be ordered by Owner at any time, and, if so ordered, any covered or closed Work shall be uncovered or opened by Contractor. If the Work is found to be in full compliance with this Contract, then Owner shall pay the cost of uncovering, opening, re-inspecting, or re-testing, as the case may be. If such Work is not in full compliance with this Contract, then Contractor shall pay such cost.

C. Correction. Until Final Payment, Contractor shall, promptly and without charge, repair, correct, or replace all or any part of the Work that is defective, damaged, flawed, or unsuitable or that in any way fails to conform strictly to the requirements of this Contract.

3.2 Warranty of Work

A. Scope of Warranty. Contractor warrants that the Work and all of its components shall be free from defects and flaws in design, workmanship, and materials; shall strictly conform to the requirements of this Contract; and shall be fit, sufficient and suitable for the purposes expressed in, or reasonably inferred from, this Contract. The warranty herein expressed shall be in addition to any other warranties expressed in this Contract, or expressed or implied by law, which are hereby reserved unto Owner.

B. Length of Warranty; Repairs; Extension of Warranty. Contractor shall, promptly and without charge, correct any failure to fulfill the above warranty that may be discovered or develop at any time within one year after Final Payment or such longer period as may be prescribed in Attachment B or Attachment D to this Contract or by law. The above warranty shall be extended automatically to cover all repaired and replacement parts and labor provided or performed under such warranty and Contractor's obligation to correct Work shall be extended for a period of one year from the date of such repair or replacement. The time period established in this Subsection 3.2B relates only to the specific obligation of Contractor to correct Work and shall not be construed to establish a period of limitation with respect to other obligations that Contractor has under this Contract.

C. Subcontractor and Supplier Warranties. Whenever Attachment B or Attachment D requires a subcontractor or supplier to provide a guaranty or warranty, Contractor shall be solely responsible for obtaining said guaranty or warranty in form satisfactory to Owner and assigning said warranty or guaranty to Owner. Acceptance of any assigned warranties or guaranties by Owner shall be a pre-condition to Final Payment and shall not relieve Contractor of any of its guaranty or warranty obligations under this Contract.

3.3 Owner's Right to Correct

If, within two business days after Owner gives Contractor notice of any defect, damage, flaw, unsuitability, nonconformity, or failure to meet warranty subject to correction by Contractor pursuant to Section 3.1 or Section 3.2 of this Contract, Contractor neglects to make, or undertake with due diligence to make, the necessary corrections, then Owner shall be entitled to make, either with its own forces or with contract forces, the corrections and to recover from Contractor all resulting costs, expenses, losses, or damages, including attorneys' fees and administrative expenses.

ARTICLE IV

FINANCIAL ASSURANCES

4.1 Bonds

Contemporaneous with Contractor's execution of this Contract, Contractor shall provide a Performance Bond and a Labor and Material Payment Bond, on forms provided by Owner, from a surety company licensed to do business in the State of Illinois with a general rating of A and a financial size category of Class X or better in Best's Insurance Guide, each in the penal sum of the Contract Price ("Bonds"). Contractor shall, at all times while providing, performing, or completing the Work, including, without limitation, at all times while correcting any failure to meet warranty pursuant to Section 3.2 of this Contract, maintain and keep in force, at Contractor's expense, the Bonds required hereunder.

4.2 Insurance

Contemporaneous with Contractor's execution of this Contract, Contractor shall provide certificates and policies of insurance evidencing the minimum insurance coverages and limits set forth in Attachment A. For good cause shown, Owner may extend the time for submission of the required policies of insurance upon such terms, and with such assurances of complete and prompt performance, as Owner may impose in the exercise of its sole discretion, however the Work may not begin until such policies are submitted. Such policies shall be in a form, and from companies, acceptable to Owner and from companies with a general rating of A minus, and a financial size category of Class X or better, in Best's Insurance Guide. Such insurance shall provide that no change, modification in, or cancellation of any insurance shall become effective until the expiration of 30 days after written notice thereof shall have been given by the insurance company to Owner. Contractor shall, at all times while providing, performing, or completing the Work, including, without limitation, at all times while correcting any failure to meet warranty pursuant to Section 3.2 of this Contract, maintain and keep in force, at Contractor's expense, the minimum insurance coverages and limits set forth in Attachment A.

4.3 Indemnification

Contractor shall indemnify, save harmless, and defend Owner against any and all lawsuits, claims, demands, damages, liabilities, losses, and expenses, including attorneys' fees and administrative expenses, that may arise, or be alleged to have arisen, out of or in connection with Contractor's performance of, or failure to perform, the Work or any part thereof, whether or not due or claimed to be due in whole or in part to the active, passive, or concurrent negligence or fault of Contractor, except to the extent caused by the sole negligence of Owner.

ARTICLE V

PAYMENT

5.1 Contract Price

Owner shall pay to Contractor, in accordance with and subject to the terms and conditions set forth in this Article V and Attachment A, and Contractor shall accept in full satisfaction for

providing, performing, and completing the Work, the amount or amounts set forth in Attachment A (the "Contract Price"), subject to any additions, deductions, or withholdings provided for in this Contract.

5.2 Taxes and Benefits

Owner is exempt from and shall not be responsible to pay, or reimburse Contractor for, any state or local sales, use, or excise taxes. The Contract Price includes all other applicable federal, state, and local taxes of every kind and nature applicable to the Work as well as all taxes, contributions, and premiums for unemployment insurance, old age or retirement benefits, pensions, annuities, or other similar benefits. All claim or right to claim additional compensation by reason of the payment of any such tax, contribution, or premium is hereby waived and released by Contractor.

5.3 Progress Payments

A. Payment in Installments. The Contract Price shall be paid in monthly installments in the manner set forth in Attachment A ("Progress Payments").

B. Pay Requests. Contractor shall, as a condition precedent to its right to receive each Progress Payment, submit to Owner a pay request in the form provided by Owner ("Pay Request"). The first Pay Request shall be submitted not sooner than 30 days following commencement of the Work. Owner may, by written notice to Contractor, designate a specific day of each month on or before which Pay Requests must be submitted. Each Pay Request shall include (a) Contractor's certification of the value of, and partial or final waivers of lien covering, all Work for which payment is then requested and (b) Contractor's certification that all prior Progress Payments have been properly applied to the payment or reimbursement of the costs with respect to which they were paid.

C. Work Entire. This Contract and the Work are entire and the Work as a whole is of the essence of this Contract. Notwithstanding any other provision of this Contract, each and every part of this Contract and of the Work are interdependent and common to one another and to Owner's obligation to pay all or any part of the Contract Price or any other consideration for the Work. Any and all Progress Payments made pursuant to this Article are provided merely for the convenience of Contractor and for no other purpose.

5.4 Final Acceptance and Final Payment

A. Notice of Completion. When the Work has been completed and is ready in all respects for acceptance by Owner, Contractor shall notify Owner and request a final inspection ("Notice of Completion"). Contractor's Notice of Completion shall be given sufficiently in advance of the Completion Date to allow for scheduling of the final inspection and for completion or correction before the Completion Date of any items identified by such inspection as being defective, damaged, flawed, unsuitable, nonconforming, incomplete, or otherwise not in full compliance with, or as required by or pursuant to, this Contract ("Punch List Work").

B. Punch List and Final Acceptance. The Work shall be finally accepted when, and only when, the whole and all parts thereof shall have been completed to the satisfaction of Owner in full compliance with, and as required by or pursuant to, this Contract. Upon receipt of Contractor's Notice of Completion, Owner shall make a review of the Work

and notify Contractor in writing of all Punch List Work, if any, to be completed or corrected. Following Contractor's completion or correction of all Punch List Work, Owner shall make another review of the Work and prepare and deliver to Contractor either a written notice of additional Punch List Work to be completed or corrected or a written notice of final acceptance of the Work ("Final Acceptance").

C. Final Payment. As soon as practicable after Final Acceptance, Contractor shall submit to Owner a properly completed final Pay Request in the form provided by Owner ("Final Pay Request"). Owner shall pay to Contractor the balance of the Contract Price, after deducting therefrom all charges against Contractor as provided for in this Contract ("Final Payment"). Final Payment shall be made not later than 60 days after Owner approves the Final Pay Request. The acceptance by Contractor of Final Payment shall operate as a full and complete release of Owner of and from any and all lawsuits, claims, demands, damages, liabilities, losses, and expenses of, by, or to Contractor for anything done, furnished for, arising out of, relating to, or in connection with the Work or for or on account of any act or neglect of Owner arising out of, relating to, or in connection with the Work.

5.5 Liens

A. Title. Nothing in this Contract shall be construed as vesting in Contractor any right of property in any equipment, materials, supplies, and other items provided under this Contract after they have been installed in, incorporated into, attached to, or affixed to, the Work or the Work Site. All such equipment, materials, supplies, and other items shall, upon being so installed, incorporated, attached or affixed, become the property of Owner, but such title shall not release Contractor from its duty to insure and protect the Work in accordance with the requirements of this Contract.

B. Waivers of Lien. Contractor shall, from time to time at Owner's request and in any event prior to Final Payment, furnish to Owner such receipts, releases, affidavits, certificates, and other evidence as may be necessary to establish, to the reasonable satisfaction of Owner, that no lien against the Work or the public funds held by Owner exists in favor of any person whatsoever for or by reason of any equipment, material, supplies, or other item furnished, labor performed, or other thing done in connection with the Work or this Contract ("Lien") and that no right to file any Lien exists in favor of any person whatsoever.

C. Removal of Liens. If at any time any notice of any Lien is filed, then Contractor shall, promptly and without charge, discharge, remove, or otherwise dispose of such Lien. Until such discharge, removal, or disposition, Owner shall have the right to retain from any money payable hereunder an amount that Owner, in its sole judgment, deems necessary to satisfy such Lien and to pay the costs and expenses, including attorneys' fees and administrative expenses, of any actions brought in connection therewith or by reason thereof.

D. Protection of Owner Only. This Section shall not operate to relieve Contractor's surety or sureties from any of their obligations under the Bonds, nor shall it be deemed to vest any right, interest, or entitlement in any subcontractor or supplier. Owner's retention of funds pursuant to this Section shall be deemed solely for the protection of its own interests pending removal of such Liens by Contractor, and Owner shall have no

obligation to apply such funds to such removal but may, nevertheless, do so where Owner's interests would thereby be served.

5.6 Deductions

A. Owner's Right to Withhold. Notwithstanding any other provision of this Contract and without prejudice to any of Owner's other rights or remedies, Owner shall have the right at any time or times, whether before or after approval of any Pay Request, to deduct and withhold from any Progress or Final Payment that may be or become due under this Contract such amount as may reasonably appear necessary to compensate Owner for any actual or prospective loss due to: (1) Work that is defective, damaged, flawed, unsuitable, nonconforming, or incomplete; (2) damage for which Contractor is liable under this Contract; (3) state or local sales, use, or excise taxes from which Owner is exempt; (4) Liens or claims of Lien regardless of merit; (5) claims of subcontractors, suppliers, or other persons regardless of merit; (6) delay in the progress or completion of the Work; (7) inability of Contractor to complete the Work; (8) failure of Contractor to properly complete or document any Pay Request; (9) any other failure of Contractor to perform any of its obligations under this Contract; or (10) the cost to Owner, including attorneys' fees and administrative costs, of correcting any of the aforesaid matters or exercising any one or more of Owner's remedies set forth in Section 6.3 of this Contract.

B. Use of Withheld Funds. Owner shall be entitled to retain any and all amounts withheld pursuant to Subsection 5-106 A above until Contractor shall have either performed the obligations in question or furnished security for such performance satisfactory to Owner. Owner shall be entitled to apply any money withheld or any other money due Contractor under this Contract to reimburse itself for any and all costs, expenses, losses, damages, liabilities, suits, judgments, awards, attorneys' fees and administrative expenses incurred, suffered, or sustained by Owner and chargeable to Contractor under this Contract.

ARTICLE VI

DISPUTES AND REMEDIES

6.1 Dispute Resolution Procedure

A. Notice of Disputes and Objections. If Contractor disputes or objects to any requirement, direction, instruction, interpretation, determination, or decision of Owner, Contractor may notify Owner in writing of its dispute or objection and of the amount of any equitable adjustment to the Contract Price or Contract Time to which Contractor claims it will be entitled as a result thereof; provided, however, that Contractor shall, nevertheless, proceed without delay to perform the Work as required, directed, instructed, interpreted, determined, or decided by Owner, without regard to such dispute or objection. Unless Contractor so notifies Owner within two business days after receipt of such requirement, direction, instruction, interpretation, determination, or decision, Contractor shall be conclusively deemed to have waived all such disputes or objections and all claims based thereon.

B. Negotiation of Disputes and Objections. To avoid and settle without litigation any such dispute or objection, Owner and Contractor agree to engage in good faith negotiations. Within three business days after Owner's receipt of Contractor's written notice of dispute or objection, a conference between Owner and Contractor shall be held to resolve the dispute. Within three business days after the end of the conference, Owner shall render its final decision, in writing, to Contractor. If Contractor objects to the final decision of Owner, then it shall, within three business days, give Owner notice thereof and, in such notice, shall state its final demand for settlement of the dispute. Unless Contractor so notifies Owner, Contractor shall be conclusively deemed (1) to have agreed to and accepted Owner's final decision and (2) to have waived all claims based on such final decision.

6.2 Contractor's Remedies

If Owner fails or refuses to satisfy a final demand made by Contractor pursuant to Section 6.01 of this Contract, or to otherwise resolve the dispute which is the subject of such demand to the satisfaction of Contractor, within ten days following receipt of such demand, then Contractor shall be entitled to pursue such remedies, not inconsistent with the provisions of this Contract, as it may have in law or equity.

6.3 Owner's Remedies

If it should appear at any time prior to Final Payment that Contractor has failed or refused to prosecute, or has delayed in the prosecution of, the Work with diligence at a rate that assures completion of the Work in full compliance with the requirements of this Contract on or before the Completion Date, or has attempted to assign this Contract or Contractor's rights under this Contract, either in whole or in part, or has falsely made any representation or warranty in this Contract, or has otherwise failed, refused, or delayed to perform or satisfy any other requirement of this Contract or has failed to pay its debts as they come due ("Event of Default"), and has failed to cure any such Event of Default within five business days after Contractor's receipt of written notice of such Event of Default, then Owner shall have the right, at its election and without prejudice to any other remedies provided by law or equity, to pursue any one or more of the following remedies:

1. Owner may require Contractor, within such reasonable time as may be fixed by Owner, to complete or correct all or any part of the work that is defective, damaged, flawed, unsuitable, nonconforming, or incomplete; to remove from the Work Site any such work; to accelerate all or any part of the work; and to take any or all other action necessary to bring Contractor and the Work into strict compliance with this Contract.

2. Owner may perform or have performed all work necessary for the accomplishment of the results stated in Paragraph 1 above and withhold or recover from Contractor all the cost and expense, including attorneys' fees and administrative costs, incurred by Owner in connection therewith.

3. Owner may accept the defective, damaged, flawed, unsuitable, nonconforming, incomplete, or dilatory work or part thereof and make an equitable reduction in the Contract Price.

4. Owner may terminate this Contract without liability for further payment of amounts due or to become due under this Contract.

5. Owner may, without terminating this Contract, terminate Contractor's rights under this Contract and, for the purpose of completing or correcting the Work, evict Contractor and take possession of all equipment, materials, supplies, tools, appliances, plans, specifications, schedules, manuals, drawings, and other papers relating to the work, whether at the work site or elsewhere, and either complete or correct the work with its own forces or contracted forces, all at Contractor's expense.

6. Upon termination of this Contract or of Contractor's rights under this Contract, and at Owner's option exercised in writing, any or all subcontracts and supplier contracts of Contractor shall be deemed to be assigned to Owner without any further action being required, but Owner shall not thereby assume any obligation for payments due under such subcontracts and supplier contracts for any work provided or performed prior to such assignment.

7. Owner may withhold from any Progress Payment or Final Payment, whether or not previously approved, or may recover from Contractor, any and all costs, including attorneys' fees and administrative expense, incurred by Owner as the result of any Event of Default or as a result of actions taken by Owner in response to any Event of Default.

8. Owner may recover any damages suffered by Owner.

6.4 Owner's Special Remedy for Delay

If the Work is not completed by Contractor, in full compliance with, and as required by or pursuant to, this Contract, within the Contract Time as such time may be extended by Change Order, then Owner may invoke its remedies under Section 6.3 of this Contract or may, in the exercise of its sole and absolute discretion, permit Contractor to complete the Work but charge to Contractor, and deduct from any Progress or Final Payments, whether or not previously approved, administrative expenses and costs for each day completion of the Work is delayed beyond the Completion Date, computed on the basis of the "Per Diem Administrative Charge" set forth in Attachment A, as well as any additional damages caused by such delay.

6.5 Terminations and Suspensions Deemed for Convenience

Any termination or suspension of Contractor's rights under this Contract for an alleged default that is ultimately held unjustified shall automatically be deemed to be a termination or suspension for the convenience of Owner under Section 1.15 of this Contract.

ARTICLE VII

LEGAL RELATIONSHIPS AND REQUIREMENTS

7.1 Binding Effect

This Contract shall be binding upon Owner and Contractor and upon their respective heirs, executors, administrators, personal representatives, and permitted successors and assigns. Every reference in this Contract to a party shall also be deemed to be a reference to the authorized officers, employees, agents, and representatives of such party.

7.2 Relationship of the Parties

Contractor shall act as an independent contractor in providing and performing the Work. Nothing in, nor done pursuant to, this Contract shall be construed (1) to create the relationship of principal and agent, partners, or joint ventures between Owner and Contractor or (2) except as provided in Paragraph 6.3(6) above, to create any relationship between Owner and any subcontractor or supplier of Contractor.

7.3 No Collusion

Contractor hereby represents that the only persons, firms, or corporations interested in this Contract as principals are those disclosed to Owner prior to the execution of this Contract, and that this Contract is made without collusion with any other person, firm, or corporation. If at any time it shall be found that Contractor has, in procuring this Contract, colluded with any other person, firm, or corporation, then Contractor shall be liable to Owner for all loss or damage that Owner may suffer thereby, and this Contract shall, at Owner's option, be null and void.

7.4 Assignment

Contractor shall not (1) assign this Contract in whole or in part, (2) assign any of Contractor's rights or obligations under this Contract, or (3) assign any payment due or to become due under this Contract without the prior express written approval of Owner, which approval may be withheld in the sole and unfettered discretion of Owner; provided, however, that Owner's prior written approval shall not be required for assignments of accounts as defined in the Illinois Commercial Code, if to do so would violate Section 9-318 of the Illinois Commercial Code, 810 ILCS 5/9-318. Owner may assign this Contract, in whole or in part, or any or all of its rights or obligations under this Contract, without the consent of Contractor.

7.5 Confidential Information

All information supplied by Owner to Contractor for or in connection with this Contract or the Work shall be held confidential by Contractor and shall not, without the prior express written consent of Owner, be used for any purpose other than performance of the Work.

7.6 No Waiver

No examination, inspection, investigation, test, measurement, review, determination, decision, certificate, or approval by Owner, nor any order by Owner for the payment of money, nor any payment for, or use, occupancy, possession, or acceptance of, the whole or any part of the Work by Owner, nor any extension of time granted by Owner, nor any delay by Owner in exercising any right under this Contract, nor any other act or omission of Owner shall constitute or be deemed to be an acceptance of any defective, damaged, flawed, unsuitable, nonconforming, or incomplete Work, equipment, materials, or supplies, nor operate to waive or otherwise diminish the effect of any warranty or representation made by Contractor; or of any requirement or provision of this Contract; or of any remedy, power, or right of Owner.

7.7 No Third Party Beneficiaries

No claim as a third party beneficiary under this Contract by any person, firm, or corporation other than Contractor shall be made or be valid against Owner.

7.8 Notices

All notices required or permitted to be given under this Contract shall be in writing and shall be deemed received by the addressee thereof when delivered in person on a business day at the address set forth below or on the third business day after being deposited in any main or branch United States post office, for delivery at the address set forth below by properly addressed, postage prepaid, certified or registered mail, return receipt requested.

Notices and communications to Owner shall be addressed to, and delivered at, the following address:

Northbrook Public Works
655 Huehl Road
Northbrook, Illinois 60062
Attention: Jim Huff

Notices and communications to Contractor shall be addressed to, and delivered at, the following address:

Schroeder & Schroeder, Inc.
7306 Central Park
Skokie, Illinois 60076

The foregoing shall not be deemed to preclude the use of other non-oral means of notification or to invalidate any notice properly given by any such other non-oral means.

By notice complying with the requirements of this Section, Owner and Contractor each shall have the right to change the address or addressee or both for all future notices to it, but no notice of a change of address shall be effective until actually received.

7.9 Governing Laws

This Contract and the rights of Owner and Contractor under this Contract shall be interpreted according to the internal laws, but not the conflict of laws rules, of the State of Illinois.

7.10 Changes in Laws

Unless otherwise explicitly provided in this Contract, any reference to laws shall include such laws as they may be amended or modified from time to time.

7.11 Compliance with Laws and Grants

Contractor shall give all notices, pay all fees, and take all other action that may be necessary to ensure that the Work is provided, performed, and completed in accordance with all required

governmental permits, licenses or other approvals and authorizations that may be required in connection with providing, performing, and completing the Work, and with all applicable statutes, ordinances, rules, and regulations, including without limitation the Prevailing Wage Act, 820 ILCS 130/0.01 et seq. [formerly Ill. Rev. Stat. ch. 48, Sec. 39s-0.01 et seq.] (in furtherance of which, a copy of Owner's ordinance ascertaining the prevailing rate of wages in effect as of the date of this Contract has been attached as an Appendix to this Contract; if the Illinois Department of Labor revises the prevailing rate of hourly wages to be paid, the revised rate shall apply to this Contract); any other prevailing wage laws; the Fair Labor Standards Act; any statutes regarding qualification to do business; any statutes requiring preference to laborers of specified classes; the Illinois Steel Products Procurement Act, 30 ILCS 565/1 et seq. [formerly Ill. Rev. Stat. ch. 48, sec. 1801 et seq.]; any statutes prohibiting discrimination because of, or requiring affirmative action based on, race, creed, color, national origin, age, sex, or other prohibited classification, including, without limitation, the Americans with Disabilities Act of 1990, 42 U.S.C. sec. 12101 et seq., the Illinois Human Rights Act, 775 ILCS 5/1-101 et seq. [formerly Ill. Rev. Stat. ch. 68, sec. 1-101 et seq.] and the Discrimination in Public Contracts Act, 775 ILCS 10/1 et seq. [formerly Ill. Rev. Stat. ch. 29, sec. 17 et seq.]; and any statutes regarding safety or the performance of the Work, including the Illinois Structural Work Act, the Illinois Underground Utility Facilities Damage Prevention Act, and the Occupational Safety and Health Act. Contractor shall also comply with all conditions of any federal, state, or local grant received by Owner or Contractor with respect to this Contract or the Work.

Contractor shall be solely liable for any fines or civil penalties that are imposed by any governmental or quasi-governmental agency or body that may arise, or be alleged to have arisen, out of or in connection with Contractor's, or its subcontractors' or suppliers', performance of, or failure to perform, the Work or any part thereof.

Every provision of law required by law to be inserted into this Contract shall be deemed to be inserted herein.

7.12 Compliance with Patents

A. Assumption of Costs, Royalties, and Fees. Contractor shall pay or cause to be paid all costs, royalties, and fees arising from the use on, or the incorporation into, the Work, of patented equipment, materials, supplies, tools, appliances, devices, processes, or inventions.

B. Effect of Contractor Being Enjoined. Should Contractor be enjoined from furnishing or using any equipment, materials, supplies, tools, appliances, devices, processes, or inventions supplied or required to be supplied or used under this Contract, Contractor shall promptly offer substitute equipment, materials, supplies, tools, appliances, devices, processes, or inventions in lieu thereof, of equal efficiency, quality, suitability, and market value, for review by Owner. If Owner should disapprove the offered substitutes and should elect, in lieu of a substitution, to have supplied, and to retain and use, any such equipment, materials, supplies, tools, appliances, devices, processes, or inventions as may by this Contract be required to be supplied, Contractor shall pay such royalties and secure such valid licenses as may be requisite and necessary for Owner to use such equipment, materials, supplies, tools, appliances, devices, processes, or inventions without being disturbed or in any way interfered with by any proceeding in law or equity on account thereof. Should Contractor neglect or refuse to make any approved substitution promptly, or to pay such royalties and secure such licenses as

may be necessary, then Owner shall have the right to make such substitution, or Owner may pay such royalties and secure such licenses and charge the cost thereof against any money due Contractor from Owner or recover the amount thereof from Contractor and its surety or sureties notwithstanding that Final Payment may have been made.

7.13 Time

The Contract Time is of the essence of this Contract. Except where otherwise stated, references in this Contract to days shall be construed to refer to calendar days.

7.14 Severability

The provisions of this Contract shall be interpreted when possible to sustain their legality and enforceability as a whole. In the event any provision of this Contract shall be held invalid, illegal, or unenforceable by a court of competent jurisdiction, in whole or in part, neither the validity of the remaining part of such provision, nor the validity of any other provisions of this Contract shall be in any way affected thereby.

7.15 Entire Agreement

This Contract sets forth the entire agreement of Owner and Contractor with respect to the accomplishment of the Work and the payment of the Contract Price therefor, and there are no other understandings or agreements, oral or written, between Owner and Contractor with respect to the Work and the compensation therefor.

Nothing in this Contract shall be construed to waive or limit any aspect of Owner's lawful authority to regulate the activities of Contractor, its subcontractors' or any other person or to regulate the Work, the Work Site or any other matter falling within its lawful regulatory jurisdiction and powers. No review, inspection, test, audit, measurement, order, determination, decision, disapproval, approval, payment for or use or acceptance of the Work, or any other act or omission of Owner shall imply, create any interest in, be deemed to be the issuance of or require Owner to issue any license or permit to Contractor or any subcontractor.

7.16 Amendments

No modification, addition, deletion, revision, alteration or other change to this Contract shall be effective unless and until such change is reduced to writing and executed and delivered by Owner and Contractor.

IN WITNESS WHEREOF, Owner and Contractor have caused this Contract to be executed in five original counterparts as of the day and year first written above.

(SEAL)

Attest/Witness:

VILLAGE OF NORTHBROOK

By: _____
Derek Gau

By: _____
Cara Pavlicek

Title: Village Clerk

Title: Village Manager

Attest/Witness:

SCHOREDER & SCHROEDER, INC.

By: _____

By: _____
Joe Vrabel

Title: Secretary

Title: President

STATE OF ILLINOIS)
) SS
COUNTY OF Cook)

CONTRACTOR'S CERTIFICATION

Joe Vrabel, being first duly sworn on oath, deposes and states that all statements herein made are made on behalf of Contractor, that this deponent is authorized to make them, and that the statements contained herein are true and correct.

Contractor deposes, states, and certifies that Contractor is not barred from contracting with a unit of state or local government as a result of (i) a delinquency in the payment of any tax administered by the Illinois Department of Revenue unless Contractor is contesting, in accordance with the procedures established by the appropriate Revenue Act, its liability for the tax or the amount of tax, as set forth in 65 ILCS 5/11-42.1-1 et seq. [formerly Ill. Rev. Stat. ch. 24, sec. 11-42.1-1]; or (ii) a violation of either Section 33E-3 or Section 33E-4 of Article 33E of the Criminal Code of 1961, 720 ILCS 5/33E-1 et seq. [formerly Ill. Rev. Stat. ch. 38, sec. 33E-1 et seq.].

DATED this 26th day of March, 2025.

Attest/Witness:

By: _____

Title: Secretary

SCHROEDER & SCHROEDER, INC.

By: _____
Joe Vrabel

Title: **President**

Subscribed and Sworn to
before me this 26 day
of March, 2025.

My Commission Expires: 5/1/2027

_____
Notary Public

[SEAL]

"OFFICIAL SEAL"
JENNYFER MORALES
NOTARY PUBLIC, STATE OF ILLINOIS
MY COMMISSION EXPIRES 5/1/2027

ATTACHMENT A

SUPPLEMENTAL SCHEDULE OF CONTRACT TERMS

1. Project:

   Removal and replacement of defective portland cement concrete sidewalk segments and removal and replacement of selected combination concrete curb and gutter segments.

2. Work Site:

   Various locations in the Village of Northbrook. Majority of work will be concentrated in certain subdivisions. Some work will be taking place along (Cook County R.O.W.) and (State of Illinois R.O.W.).

3. Permits, Licenses, Approvals, and Authorizations:

   Contractor shall obtain all required governmental permits, licenses, approvals, and authorizations, including without limitation the following: Village Contractor licenses, IDOT and Cook County DOTH permits as applicable and if required by the agency(s).

4. Commencement Date:

   No early than August 4, 2025. The contractor shall work with the Village to establish a mutually agreed upon starting date.

5. Sequence of Work:

   The Village will provide the contractor with a map showing the sequence of work for each area and within each area there will be sections that makes of an area. The contractor must follow the engineer's sequence of work for areas and sections within those areas.

   The contractor will not be able to move to the next section or area if sidewalk squares have been removed and one or more of the following conditions has exceeded the required Calendar days to complete:

   1. Any open sidewalk must be poured within (12) Calendar days.
      (The exception will be for b-box repair, structure adjustments or for root grinding by the Public Works Forestry Department).
   2. Any voids left over after the forms being removed must be filled in or lawn restoration completed within seven (7) calendar days from the date the sidewalk was poured.
   3. All voids left over from installing sidewalk through driveways must be filled in with CA-6 stone within five (5) calendar days from the date the sidewalk was poured. If directed by the Engineer to patch the driveway with asphalt this work must be completed within 14 calendar days from the date the sidewalk was poured

6. Completion Date:

Completion date of September 6, 2025, plus extensions, if any, authorized by a Change Order issued pursuant to Subsection 2.2A of the Contract.

7. Insurance Coverages:

A. Worker's Compensation and Employer's Liability
with limits not less than:
(1) Worker's Compensation: Statutory;

(2) Employer's Liability:
$1,000,000 injury - per occurrence
$ 500,000 disease - per employee
$1,000,000 disease - policy limit
Such insurance shall evidence that coverage applies in the State of Illinois.

B. Comprehensive Motor Vehicle Liability, with a combined single limit of liability for bodily injury and property damage of not less $3,000,000 for vehicles owned, non-owned, or rented. All employees shall be included as insureds.

C. Commercial General Liability with coverage written on an "occurrence" basis and with "per project" limits no less than $3,000,000 Bodily Injury and Property Damage Combined Single Limit.
Coverage is to be written on an "occurrence basis:

Coverages shall include:
- Broad Form Property Damage Endorsement
- Products/Completed Operations (to be maintained for 2 years following final payment).
- Independent Contractors
- Personal Injury (with Employment Exclusion deleted)
- "X," "C," and "U" exclusions shall be limited
- Contractual Liability
-Railroad exclusions shall be deleted if Work Site is within 50 feet of any railroad track.

All employees shall be included as insureds.
Contractual Liability shall specifically include the indemnification set forth in the Contract.

D. Umbrella Policy. The required coverages may be in any combination of primary, excess and umbrella policies. Any excess or umbrella policy must provide excess coverage over underlying insurance on a following-form basis such that when any loss covered by the primary policy exceeds the limits under the primary policy, the excess or umbrella policy becomes effective to cover such loss.

E. Deductible. Each policy shall have a deductible or self-insured retention of not more than $1,000.

F. Owner as Additional Insured. Owner shall be named as an Additional Insured on all policies except for Worker's Compensation, and Comprehensive Motor Vehicle Liability.

Each such additional Insured endorsement shall identify Owner as follows: Village of Northbrook, including its Board Members and elected and appointed officials, its officers,

employees, agents, attorneys, consultants, and representatives. Additional insured coverage shall be provided on endorsements at least as broad as ISO form CG2010 or CG2026 (pre 2004 editions).

G. Other Parties as Additional Insureds. In addition to the Owner, the following parties shall be named as additional insureds on the following policies.

Additional Insured	Policy or Policies
No Additional Insured Parties Except Owner As Stated Above	

8. Contract Price:

SCHEDULE OF PRICES

A. UNIT PRICE CONTRACT

For providing, performing, and completing all Work, the sum of the products resulting from multiplying the number of acceptable units of Unit Price Items listed below incorporated in the Work by the Unit Price set forth below for such Unit Price Item:

COMPLETE TABLE AS INDICATED

Unit Price Item	Unit	Approximate Number of Units	Price Per Unit	Extension
1. P.C.C. Sidewalk Removal and Replacement, 5" for Local Streets	sq. ft.	24,750	$11.00	$218,238.00
2. P.C.C. Sidewalk Removal and Replacement, 5" for Non-Local Streets	sq. ft.	6,700	$11.00	$103,284.50
3. Sodding Special	sq. yd.	150	$20.00	$3,000.00
4. Combination P.C.C. Curb/Gutter Removal and Replacement	lin. ft.	150	$45.00	$6,000.00
5. Asphalt Pavement Patching – 2"	sq. yd.	200	$40.00	$7,500.00
6. Detectable Warnings	sq. ft.	600	$20.00	$28,000.00
7. Manhole Adjustment	ea.	4	$550.00	$2,000.00

TOTAL CONTRACT PRICE:
(the sum of the extensions for the Unit Price Items)

Three Hundred and Seventy-Seven Thousand nine hundred and Zero Dollars and Zero Cents
(in writing) (in writing)

$377,900 Dollars and 00 Cents
(in figures) (in figures)

9. Progress Payments:

A. General. Owner shall pay to Contractor 90 percent of the Value of Work, determined in the manner set forth below, installed and complete in place up to the day before the Pay Request, less the aggregate of all previous Progress Payments. The total amount of Progress Payments made prior to Final Acceptance by Owner shall not exceed 90 percent of the Contract Price.

B. Value of Work. The Value of the Work shall be determined as follows:

(1) Lump Sum Items. For all Work to be paid on a lump sum basis, Contractor shall, not later than 10 days after execution of the Contract and before submitting its first Pay Request, submit to Owner a schedule showing the value of each component part of such Work in form and with substantiating data acceptable to Owner ("Breakdown Schedule"). The sum of the items listed in the Breakdown Schedule shall equal the amount or amounts set forth in the Schedule of Prices for Lump Sum Work. An unbalanced Breakdown Schedule providing for overpayment of Contractor on component parts of the Work to be performed first will not be accepted. The Breakdown Schedule shall be revised and resubmitted until acceptable to Owner. No payment shall be made for any lump sum item until Contractor has submitted, and Owner has approved, an acceptable Breakdown Schedule.

Owner may require that the approved Breakdown Schedule be revised based on developments occurring during the provision and performance of the Work. If Contractor fails to submit a revised Breakdown Schedule that is acceptable to Owner, Owner shall have the right either to suspend Progress and Final Payments for Lump Sum Work or to make such Payments based on Owner's determination of the value of the Work completed.

(2) Unit Price Items. For all Work to be paid on a unit price basis, the value of such Work shall be determined by Owner on the basis of the actual number of acceptable units of Unit Price Items installed and complete in place, multiplied by the applicable Unit Price set forth in the Schedule of Prices. The actual number of acceptable units installed and complete in place shall be measured on the basis described in Attachment B to the Contract or, in the absence of such description, on the basis determined by Owner. The number of units of Unit Price Items stated in the Schedule of Prices are Owner's estimate only and shall not be used in establishing the Progress or Final Payments due Contractor. The Contract Price shall be adjusted to reflect the actual number of acceptable units of Unit Price Items installed and complete in place upon Final Acceptance.

C. Application of Payments. All Progress and Final Payments made by Owner to Contractor shall be applied to the payment or reimbursement of the costs with respect to which they were paid and shall not be applied to or used for any pre-existing or unrelated debt between Contractor and Owner or between Contractor and any third party.

10. Per Diem Administrative Charge:

One thousand Dollars ($1,000.00) per day for each day after the Completion Date.

ATTACHMENT B

SPECIFICATIONS

1. General

Pertinent sections of the Standard Specifications for Road and Bridge Construction, adopted January 1, 2022 by the State of Illinois Department of Transportation, and all subsequent revisions thereto, are incorporated into and made a part of this Contract by this reference, and shall govern the performance of the Work, except as modified by Attachment D or other terms of this Contract. "State" or "Department" shall mean "Owner" for the purposes of this Contract.

2. Materials

Class "SI" Portland Cement Concrete shall be the standard mix design for this removal and replacement project.

Type III membrane curing compound (pigmented) shall be promptly applied to all concrete work according to pertinent sections of the Specifications and shall be considered incidental to the cost of the Contract.

Hot mix asphalt surface course- Mix "D" N50 shall be used for all asphalt pavement restorations.

Arthur Clesen, Inc.'s "Sunny Mix" or approved equal shall be the seed mixture designated for all lawn restorations.

3. Project Supervisor

Owner shall designate one of its employees to serve as Project Supervisor under this Contract.

4. Work Hours

No work that requires inspection shall be performed before 7:00 A.M. or after 4:00 P.M. or on Saturdays, Sundays and legal holidays without written approval of the Project Supervisor.

Northbrook Ordinance No. 16-52 prohibits any construction noise prior to 7:00 a.m. or after 7:00 p.m. Monday thru Friday and prior to 9:00 a.m. or after 5:00 p.m. on Saturday. Construction noise is strictly prohibited on Sundays and legal holidays.

ATTACHMENT C

LIST OF DRAWINGS

Sheet Title	Date Last Revised
P.C.C. Sidewalk Patching Detail	2020
Combination Curb & Gutter Detail	2021
424001-11 Perpendicular Curb Ramps for Sidewalks	
701501-06 Urban Lane Closure, 2L, 2W, Undivided	
701502-09 Urban Lane Closure, 2L, 2W, with Bidirectional Left Turn Lane	
701601-09 Urban Lane Closure, Multilane, 1W or 2 with Nontraversable Median	
701602-10 Urban Lane Closure, Multilane, 2W with Bidirectional Left Turn Lane	
701606-10 Urban Single Lane Closure, Multilane, 2W with Mountable Median	
701611-01 Urban Half Road Closure, Multilane, 2W with Mountable Median	
701801-06 Sidewalk, Corner or Crosswalk Closure	
701901-08 Traffic Control Devices	

NEW P.C.C. SIDEWALK

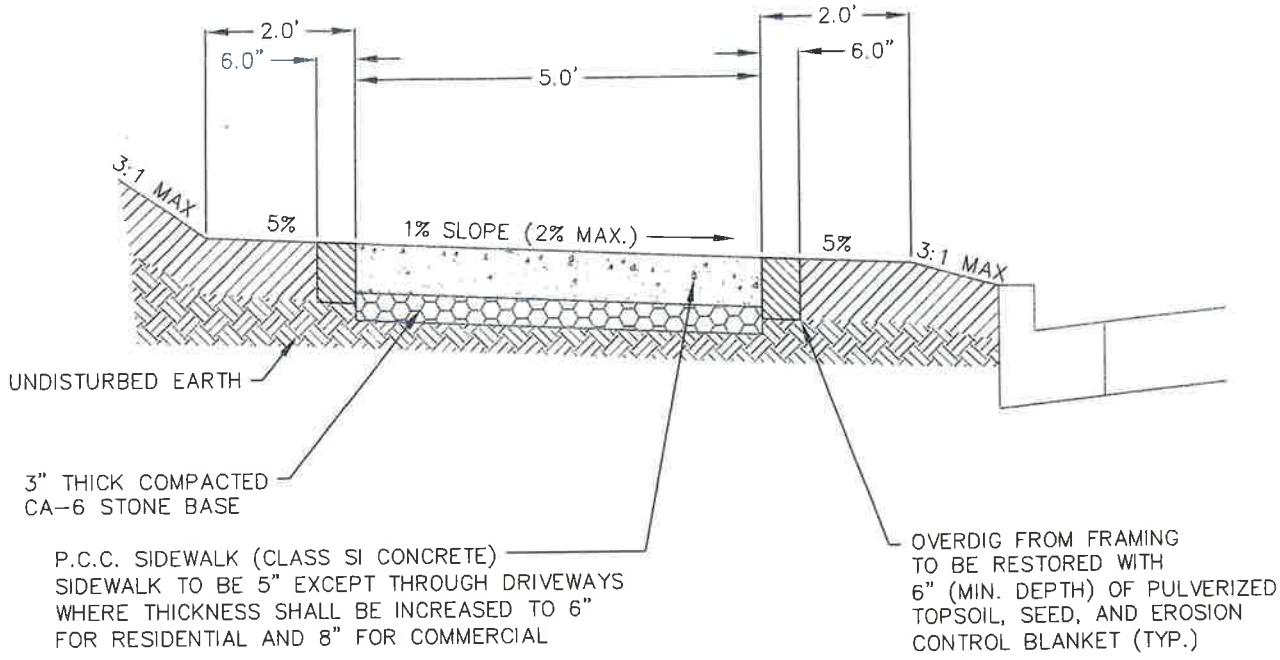

P.C.C. SIDEWALK PATCHING

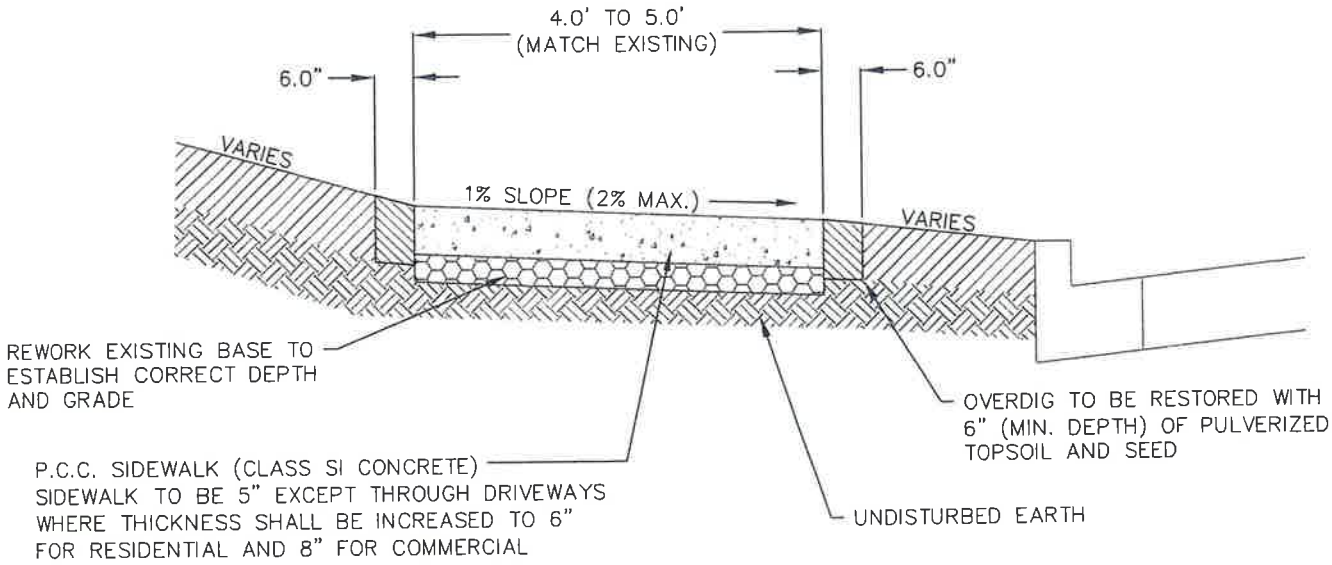

NOTES:
1. WHEN CONSTRUCTING SIDEWALK WITHIN THE DRIPLINE OF A TREE, FOLLOW STANDARD DETAIL FOR "P.C.C. SIDEWALK IN DRIPLINE DETAIL" P-6
2. PROVIDE 1/2" THICK FIBER EXPANSION JOINT PER ASTM D-1751 EVERY 50 FEET

P.C.C. SIDEWALK DETAIL

Village of Northbrook Public Works Department	DATE	REVISIONS	STANDARD DETAIL P-5 (01)
	4-30-20	Consolidated Sidewalk Details	(Sheet 1 of 1)

TYPE M-4.12

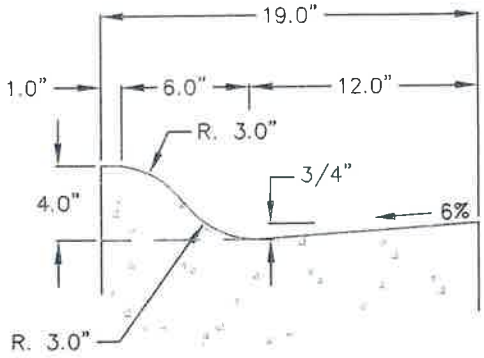

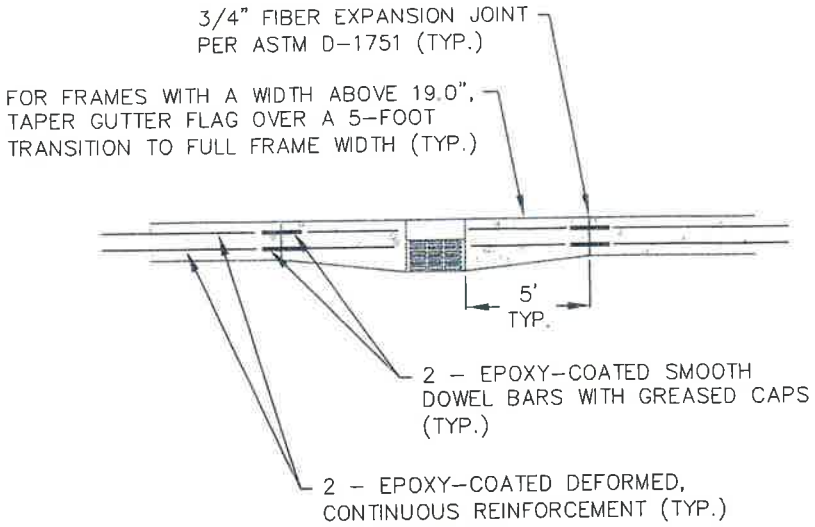

PLAN VIEW

TYPE B-6.12 & DEPRESSED CURB

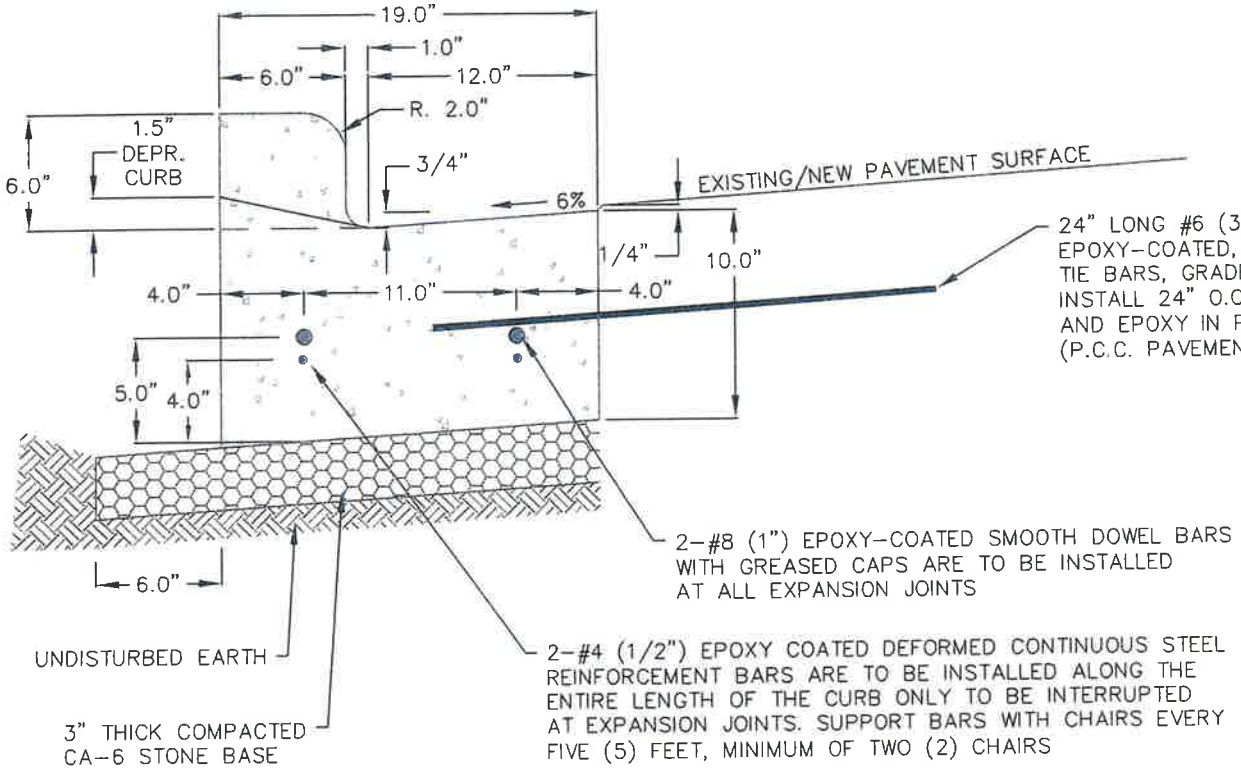

NOTES:

1. EXPANSION JOINTS ARE TO BE CONSTRUCTED AT 60' INTERVALS AND AT ADDITIONAL LOCATIONS AS SPECIFIED BY THE ENGINEER.
2. CONTRACTION JOINTS ARE TO BE CONSTRUCTED AT 15' INTERVALS AND AT ADDITIONAL LOCATIONS AS SPECIFIED BY THE ENGINEER
3. WITH NEW CURB REPLACEMENT NEXT TO HMA, CONTRACTOR IS REQUIRED TO PLACE 2' OF HMA FULL DEPTH PAID SEPARATELY TO MATCH EXISTING

COMBINATION CURB & GUTTER

Village of Northbrook
Public Works Department

DATE	REVISIONS
4-30-20	Consolidated Details, Revised Notes
4-1-21	Added Plan Note

STANDARD DETAIL
P-1 (01)

(Sheet 1 of 1)

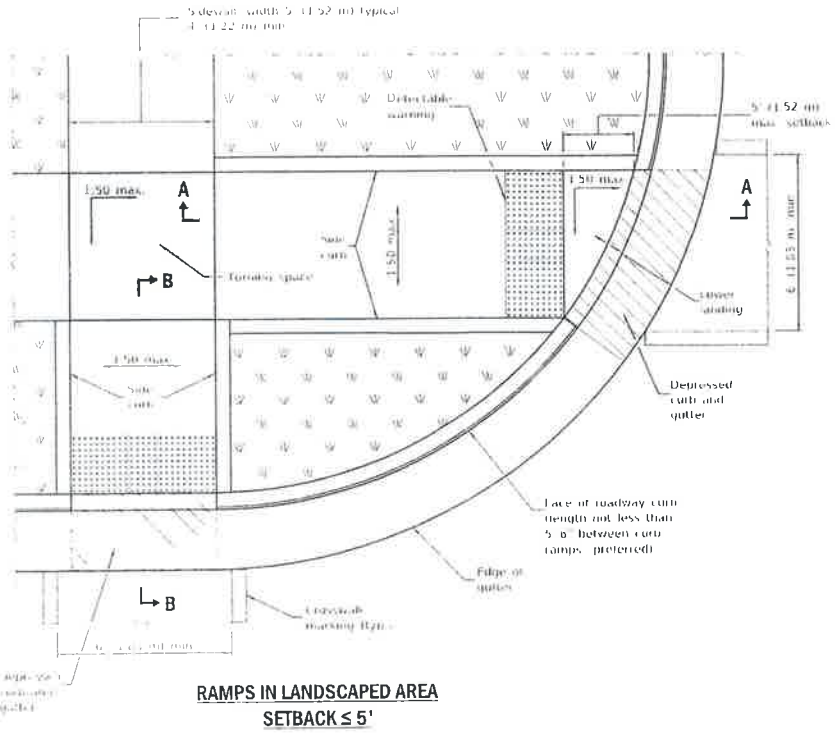

RAMPS IN LANDSCAPED AREA
SETBACK ≤ 5'

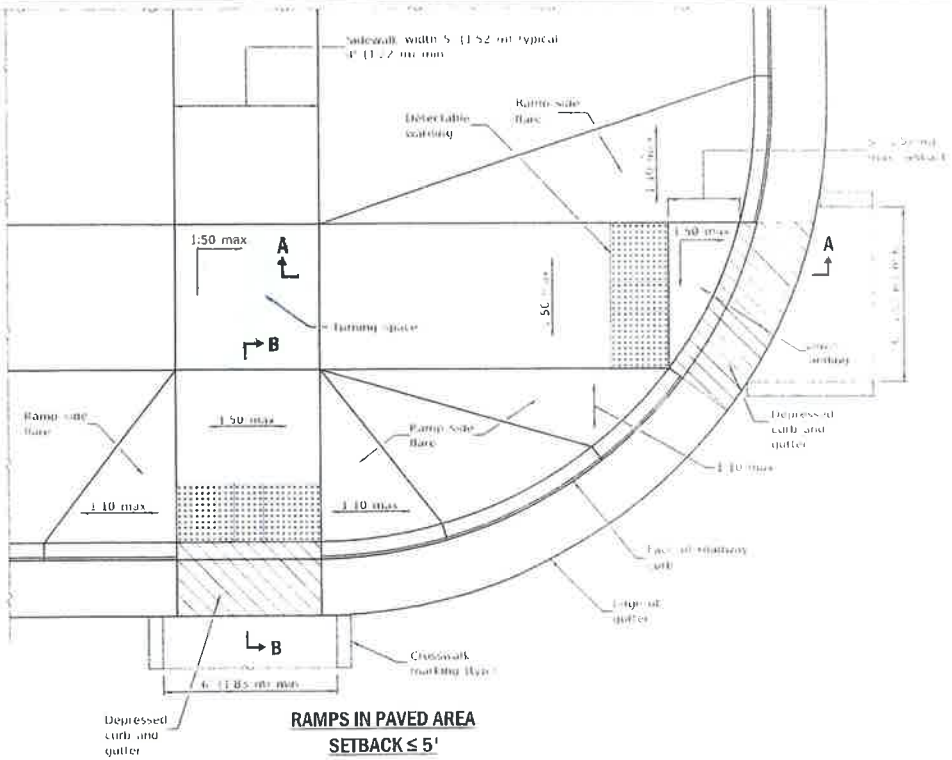

RAMPS IN PAVED AREA
SETBACK ≤ 5'

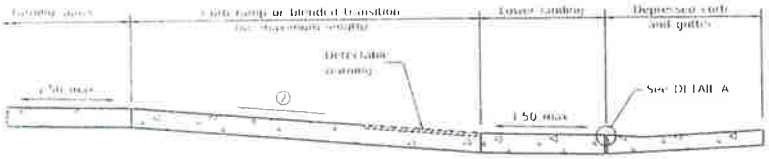

SECTION A-A

② The running slope of a curb ramp shall be 1.10 min. and 1.12 max. The running slope of a blended transition shall be 1.20 max.

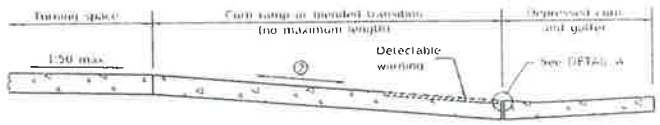

SECTION B-B

② The running slope of a curb ramp shall be 1.20 min. and 1.12 max. The running slope of a blended transition shall be 1.20 max.

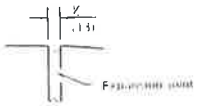

DETAIL A

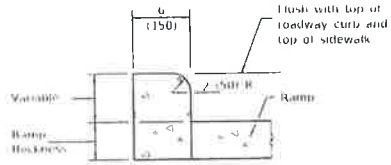

SIDE CURB DETAIL

See Sheet 2 for GENERAL NOTES

DATE	REVISIONS
1.1.19	Removed "15 foot rule" added
	"Blended transitions" and placement
	tolerances for detectable warnings
1.1.18	Omitted diagonal slope at
	turning spaces and lower
	landings

PERPENDICULAR CURB RAMPS FOR SIDEWALKS

(Sheet 1 of 2)

STANDARD 424001-11

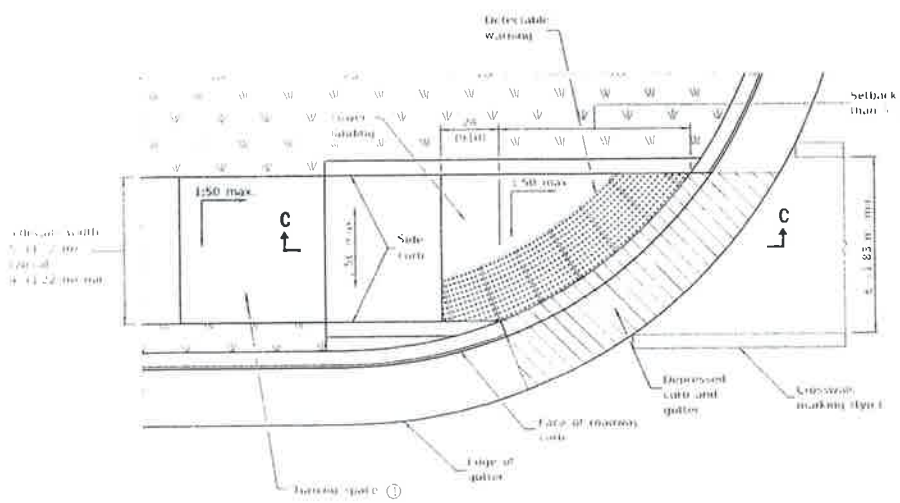

RAMP IN LANDSCAPED AREA
SETBACK > 5'

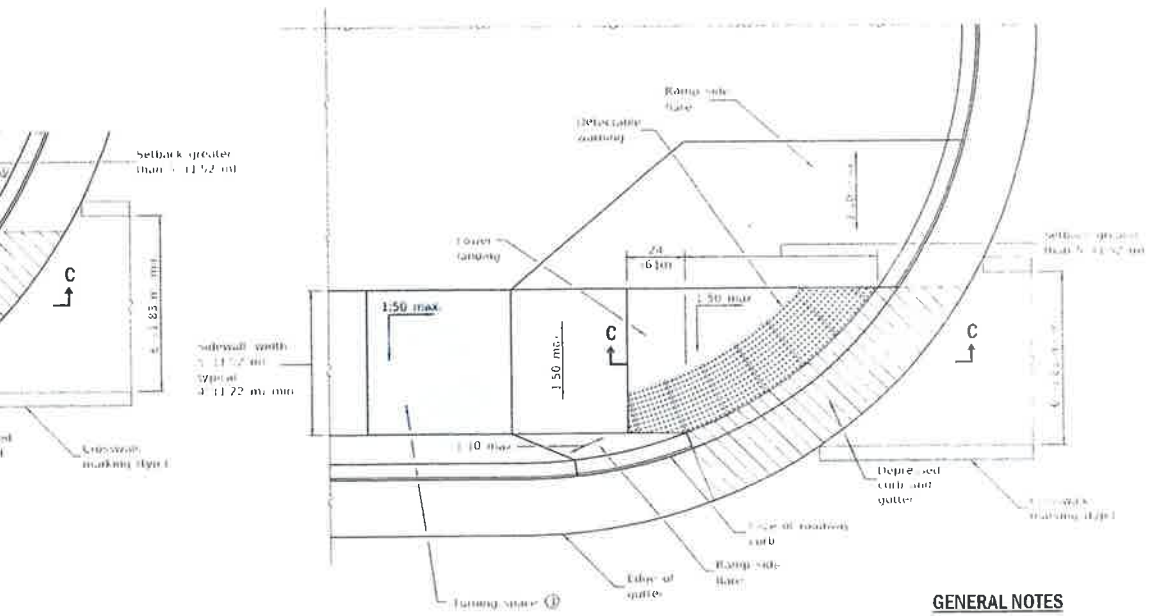

RAMP IN PAVED AREA
SETBACK > 5'

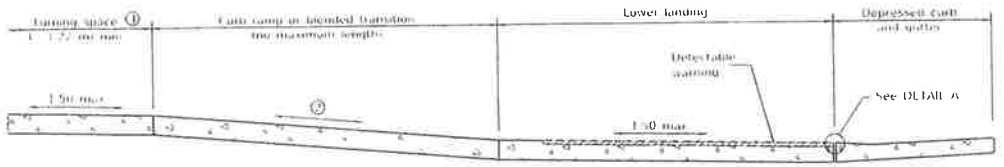

SECTION C-C

① This turning space not required for blended transitions

② The running slope of a curb ramp shall be 1:20 min and 1:12 max. The running slope of a blended transition shall be 1:20 max

GENERAL NOTES

All slope ratios are expressed as units of vertical displacement to units of horizontal displacement (V:H)

Where the turning space is unobstructed or a curb opposite a ramp, the minimum length of the turning space in the direction of the ramp run shall be 5' (1.52 m)

Where 1:50 maximum slopes are shown, 1:48 is preferred

Detectable warnings are shown in their ideal locations but the following placement tolerances are allowed:

Side Border: Detectable warnings should extend the full width of the walking surface, excluding flared sides, but a border down each side up to 2 in. (50 mm) in width is allowed

Curb Set Back: Detectable warnings located at the back of curb should directly abut with the curb but a gap up to 6 in. (152 mm) behind the curb is allowed

See Standard 606001 for details of depressed curb adjacent to curb ramp

All dimensions are in inches (millimeters) unless otherwise shown

PERPENDICULAR CURB RAMPS FOR SIDEWALKS

(Sheet 1 of 2)

STANDARD 424001-11

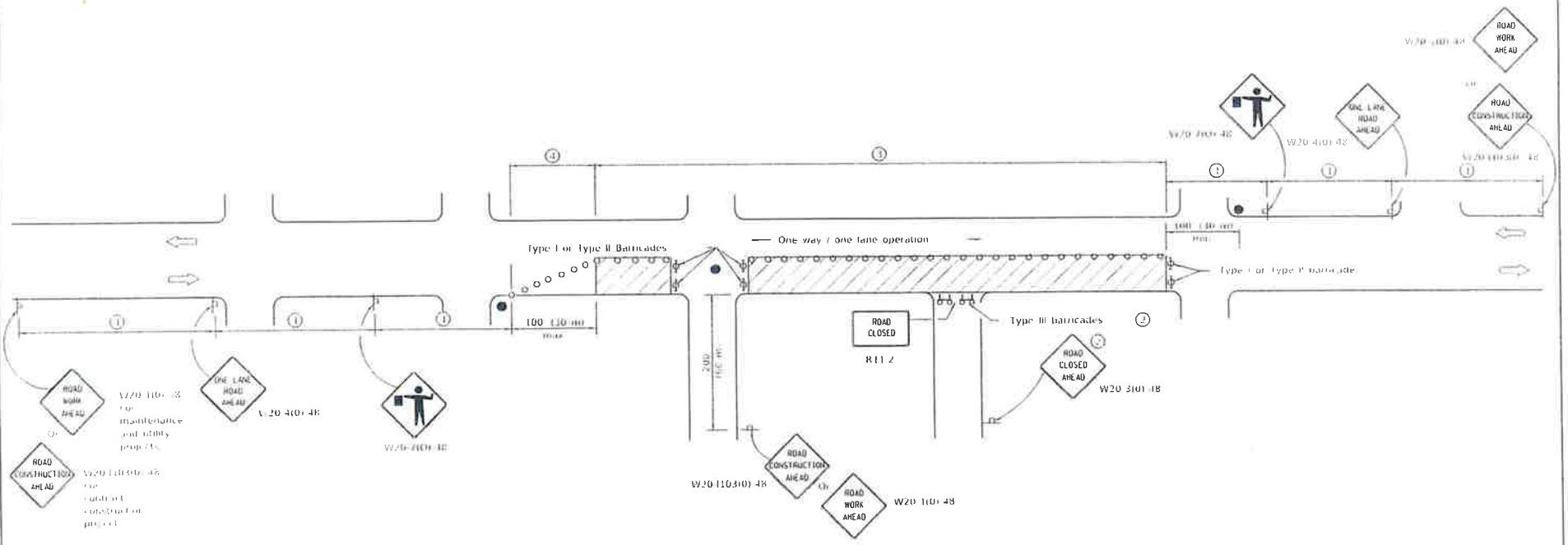

SIGN SPACING	
Posted Speed	Sign Spacing
50	500 (120 m)
60	750 (190 m)
70	200 (60 m)

SYMBOLS

- Work area
- Cone, drum or barricade (not required for moving operations)
- Sign on portable or permanent support
- Flagger with traffic control sign
- Barricade or drum with flashing light
- Type III barricade with flashing lights

(1) Refer to SIGN SPACING TABLE for distances

(2) For approved sideroad closures

(3) Cones at 25' (8 m) centers for 250 (75 m). Additional cones may be placed at 50' (15 m) centers. When drums or Type I or Type II barricades are used, the interval between devices may be doubled

(4) Cones, drums or barricades at 20' (6 m) centers

GENERAL NOTES

This Standard is used where at any time, day or night, any vehicle, equipment, workers or their activities encroach on the pavement requiring the closure of one traffic lane in an urban area.

All dimensions are in inches (millimeters) unless otherwise shown.

(GP) Alberta Department of Transportation

DATE	REVISIONS
1-11	Revised flagger sign
11-09	Switched units to
	English (metric)
	Corrected sign No's

URBAN LANE CLOSURE, 2L, 2W, UNDIVIDED

STANDARD 701501-06

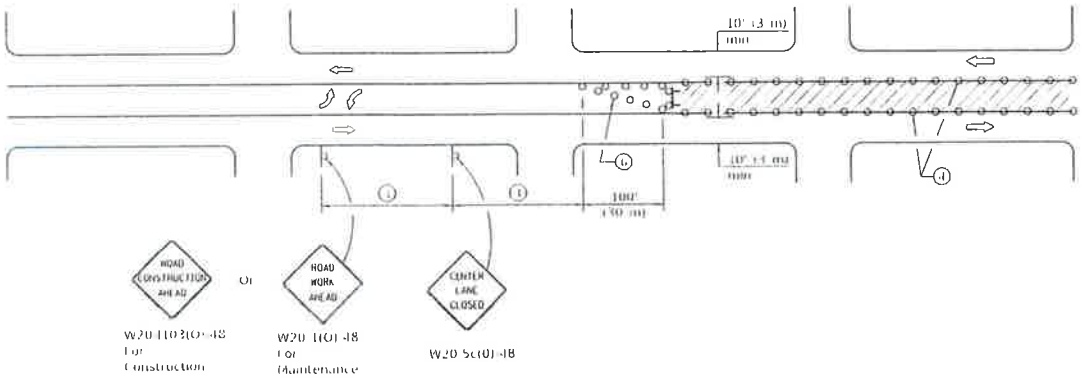

CASE I

(Signs required for both directions)

SIGN SPACING	
Posted Speed	Sign Spacing
30 mph (50 km/h)	500' (150 m)
35 mph (60 km/h)	350' (105 m)
40 mph (70 km/h)	200' (60 m)

SYMBOLS

- Work area
- Barricade or drum with flashing light
- Flagger with traffic control sign
- Cone, drum or barricade
- Sign on portable or permanent support
- Type III barricade with flashing lights

1. Refer to SIGN SPACING TABLE for distances
2. Required for speeds > 40 mph (70 km/h)
3. Required if work exceeds 500' (164 m) or 1 block
4. Cones at 25' (8 m) centers for 250' (75 m) on approach. Additional cones may be placed at 50' (15 m) centers. When drums or Type I or II barricades are used, the interval between devices may be doubled
5. For approved sideroad closures
6. Cones, drums or barricades at 20' (6 m) centers in taper
7. Use flagger sign only when flagger is present

GENERAL NOTES

This Standard is used to close one lane of an urban two lane two way roadway with a bidirectional turn lane.

Case I applies when no workers are present. When workers are present two lanes shall be closed and traffic control shall be according to Standard 701501.

Calculate L as follows:

SPEED (MPH)	FORMULAS	
	English	(Metric)
40 mph (70 km/h) or less	$L = \frac{WS^2}{60}$	$L = \frac{WS^2}{150}$
45 mph (80 km/h) or greater	L = (W)(S)	L = 0.65(W)(S)

W = Width of offset in feet (meters)

S = Normal posted speed mph (km/h)

All dimensions are in inches (millimeters) unless otherwise shown.

DATE	REVISIONS
2-1-19	Revised to allow cones at night
1-1-18	Corrected sign number for
	TWO WAY TRAFFIC sign for
	CASE II

URBAN LANE CLOSURE, 2L, 2W, WITH BIDIRECTIONAL LEFT TURN LANE

(Sheet 1 of 2)

STANDARD 701502-09

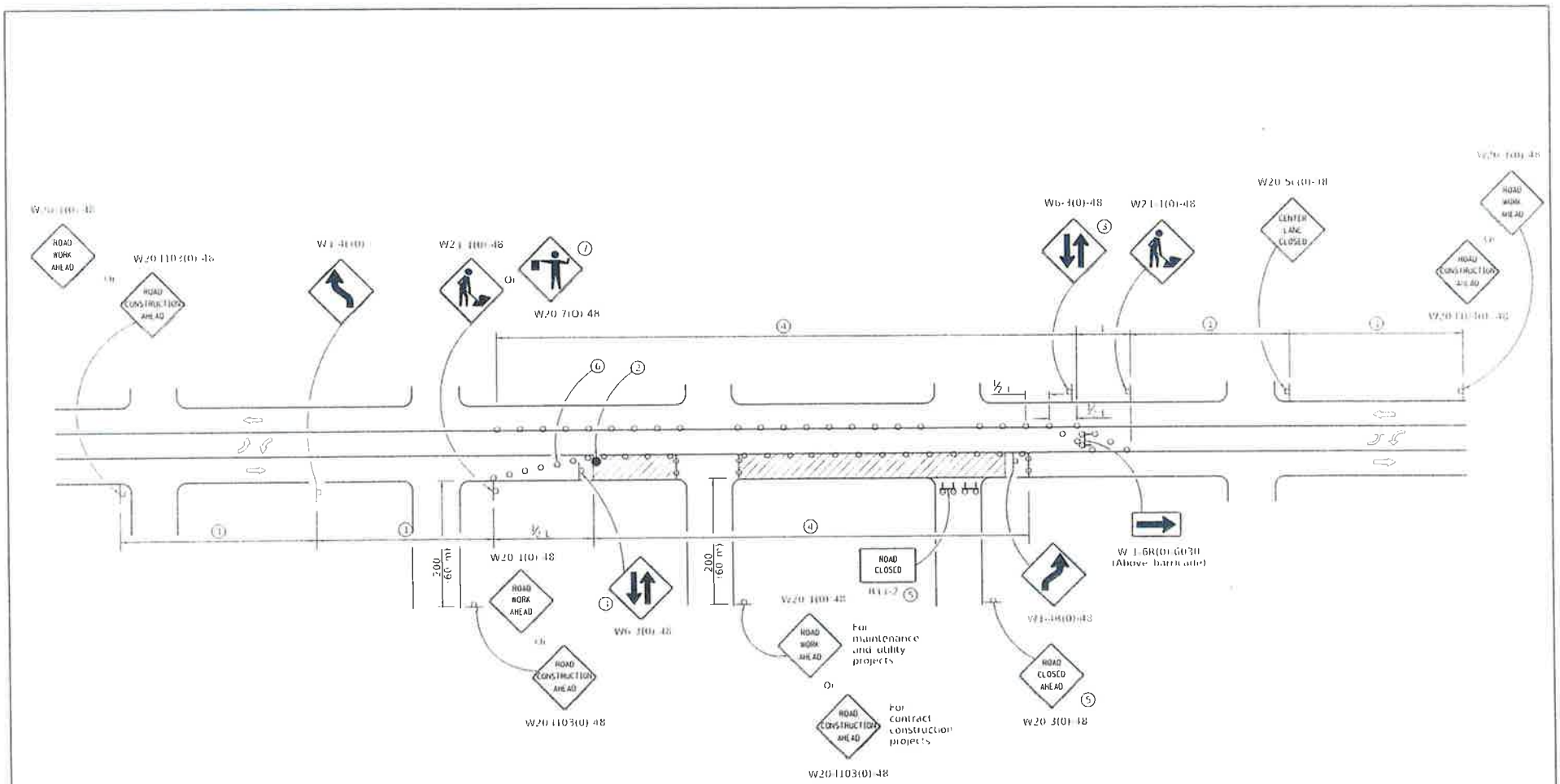

CASE II

URBAN LANE CLOSURE, 2L, 2W, WITH BIDIRECTIONAL LEFT TURN LANE

STANDARD 701502-09

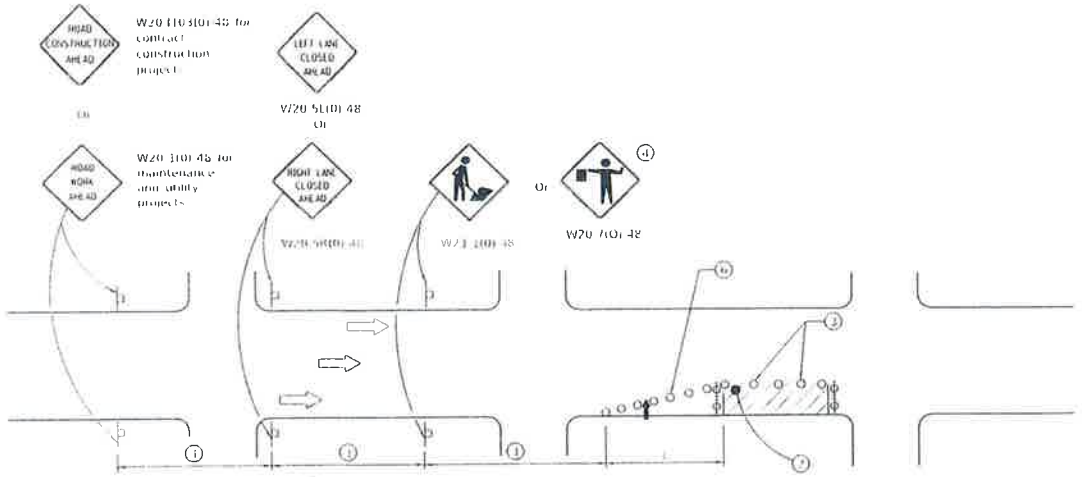

SYMBOLS

- Arrow board
- Cone, drum or barricade
- Sign on portable or permanent support
- Work area
- Barricade or drum with flashing light
- Type III barricade with flashing lights
- Flagger with traffic control sign

1. Refer to SIGN SPACING TABLE for distances
2. Required for speeds ≥ 40 MPH
3. Cones at 25' (8 m) centers for 250' (75 m). Additional cones may be placed at 50' (15 m) centers. When drums or Type I or Type II barricades are used, the interval between devices may be doubled
4. Use flagger sign only when flagger is present
5. For approved sideroad closures
6. Cones, drums or barricades at 20' (6 m) in taper

GENERAL NOTES

This Standard is used where at any time, day or night, any vehicle, equipment, workers or their activities encroach on the pavement during shoulder operations or where construction requires lane closures on urban streets.

Calculate L as follows:

SPEED LIMIT	FORMULAS	
	English	Metric
40 mph (70 km/h) or less	$L = \frac{WS^2}{150}$	$L = \frac{WS^2}{155}$
45 mph (80 km/h) or greater	$L = WS$	$L = WS$

W = Width of offset in feet (meters)

S = Normal posted speed (mph / km/h)

All dimensions are in inches (millimeters) unless otherwise shown.

DATE	REVISIONS
[illegible]14	Revised workers sign
	number to agree with
	current MUTCD
[illegible]13	Omitted text "WORKERS
	ahead"

URBAN LANE CLOSURE, MULTILANE, 1W OR 2W WITH NONTRAVERSABLE MEDIAN

(Sheet 1 of 2)

STANDARD 701601-09

191

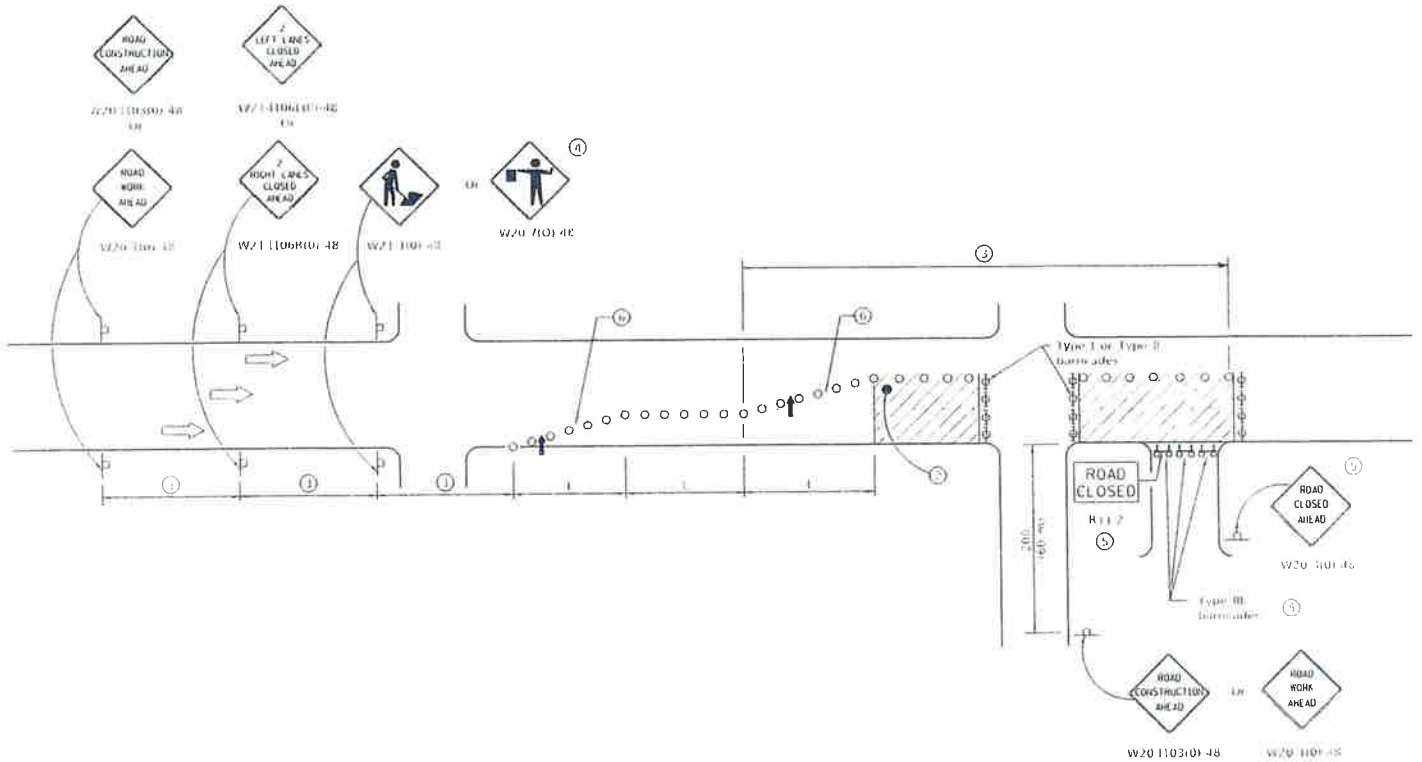

Illinois Department of Transportation

URBAN LANE CLOSURE, MULTILANE, 1W OR 2W WITH NONTRAVERSABLE MEDIAN

(Sheet 1 of 2)

STANDARD 701601-09

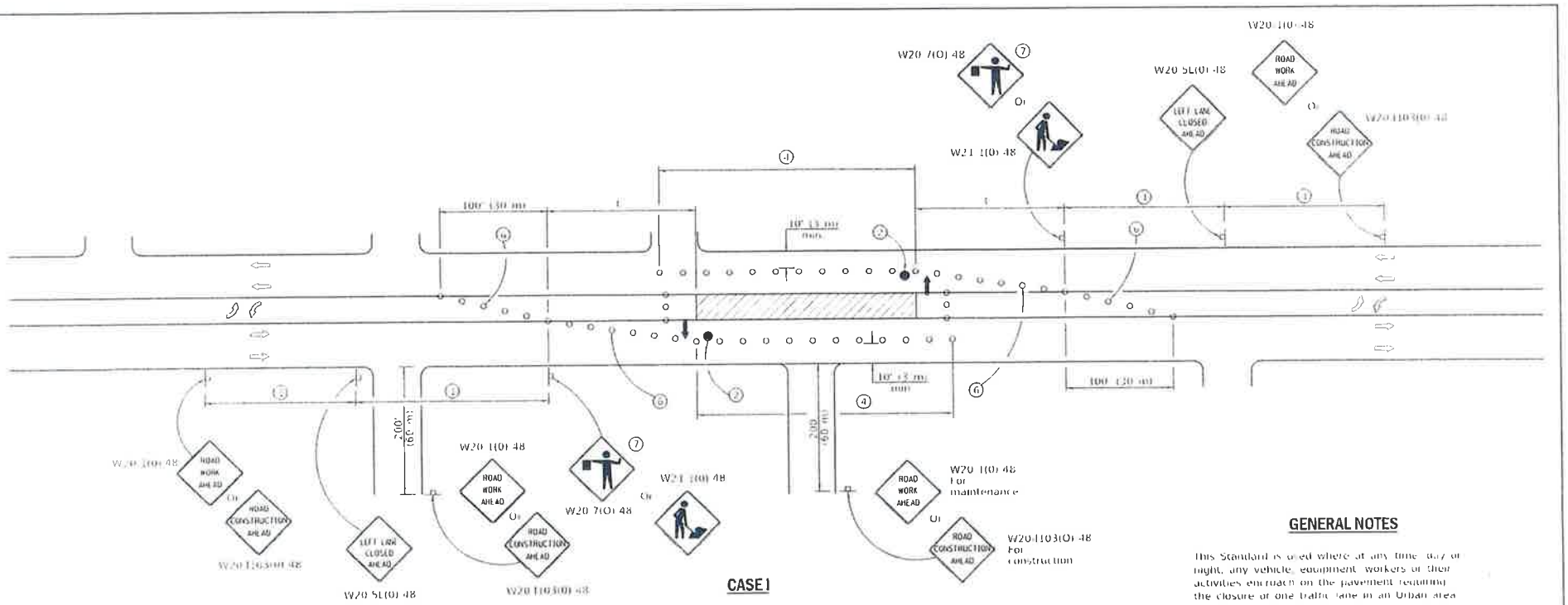

SIGN SPACING

Speed	Sign Spacing
	100' (30 m)
	350' (105 m)
	500' (150 m)

SYMBOLS

- Arrow board
- Work area
- Barricade or drum with steady burning omnidirectional light
- Flagger with traffic control sign
- Cone, drum or barricade
- Sign on portable or permanent support
- Type III barricade with flashing lights

CASE I

1. Refer to SIGN SPACING TABLE for distances
2. Required for speeds > 40 mph (70 km/h)
3. Required if work exceeds 500' (164 m) or 1 block, repeat every 1 mile (1.6 km)
4. Cones at 25' (8 m) centers for 250' (75 m) on approach. Additional cones may be placed at 50' (15 m) centers. When drums or type I or II barricades are used, the interval between devices may be doubled
5. For approved sideroad closures
6. Cones, drums or barricades at 20' (6 m) centers in taper
7. Use flagger sign only when flagger is present

GENERAL NOTES

This Standard is used where at any time, day or night, any vehicle, equipment, workers or their activities encroach on the pavement resulting in the closure of one traffic lane in an urban area.

If the work operation is performed between 9:00 a.m. and 3:00 p.m. and does not exceed 15 min, traffic protection shall be as shown for Standard 701126.

Calculate L as follows:

SPEED LIMIT	FORMULAS	
	English	Metric
40 mph (70 km/h) or less	$L = \frac{WS}{60}$	$L = \frac{WS^2}{150}$
45 mph (80 km/h) or greater	$L = WS$	$L = 0.65WS$

W = Width of offset in feet (metres)

S = Normal posted speed mph (km/h)

All dimensions are in inches (millimetres) unless otherwise shown.

DATE	REVISIONS
11 19	Revised to allow cones at night
11 15	Moved arrow boards into
	closed lanes for CASE 1

URBAN LANE CLOSURE, MULTILANE, 2W WITH BIDIRECTIONAL LEFT TURN LANE

(Sheet 1 of 4)

STANDARD 701602-10

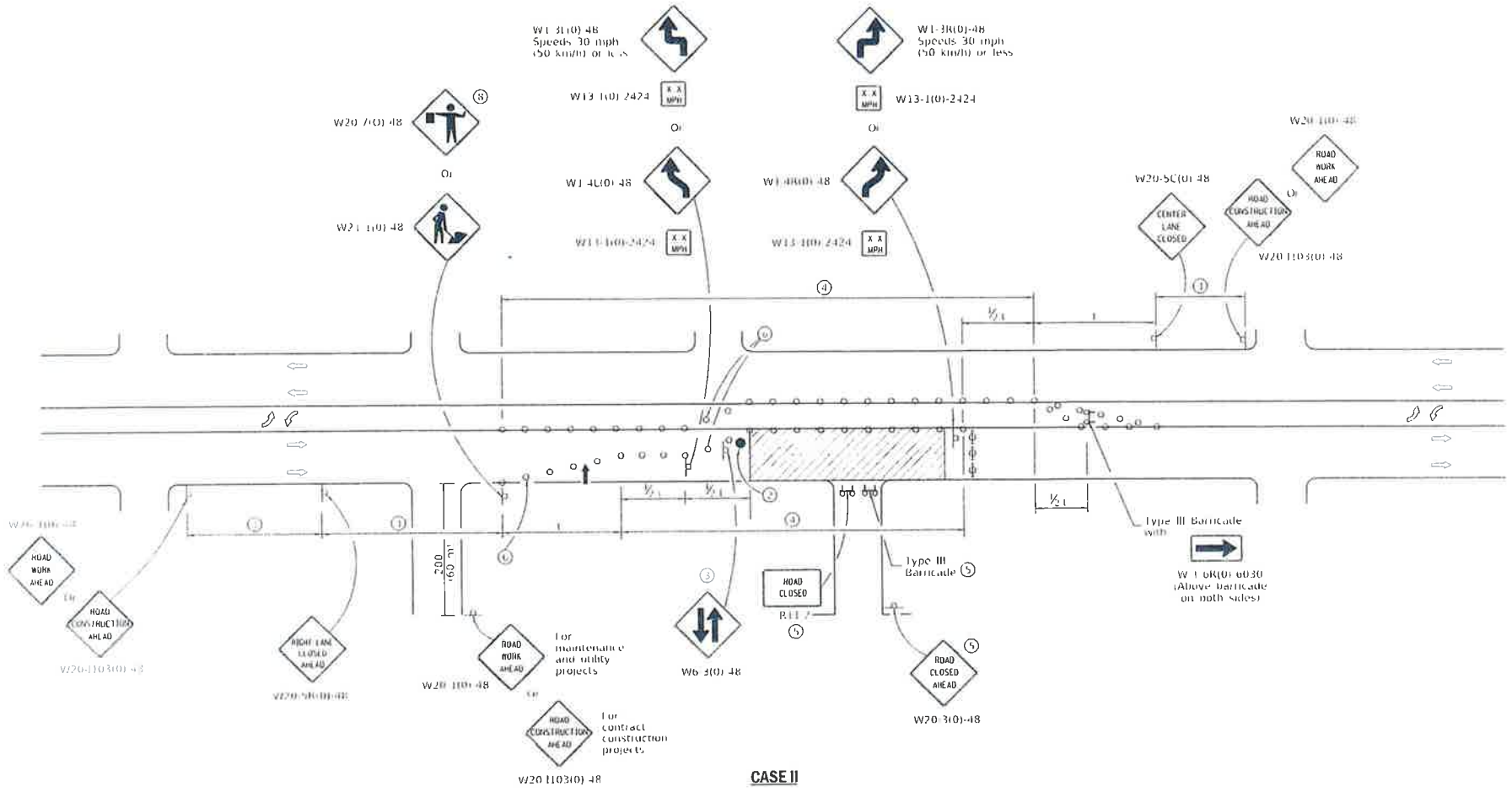

CASE II

(Sheet 2 of 4)

URBAN LANE CLOSURE, MULTILANE, 2W WITH BIDIRECTIONAL LEFT TURN LANE

STANDARD 701602-10

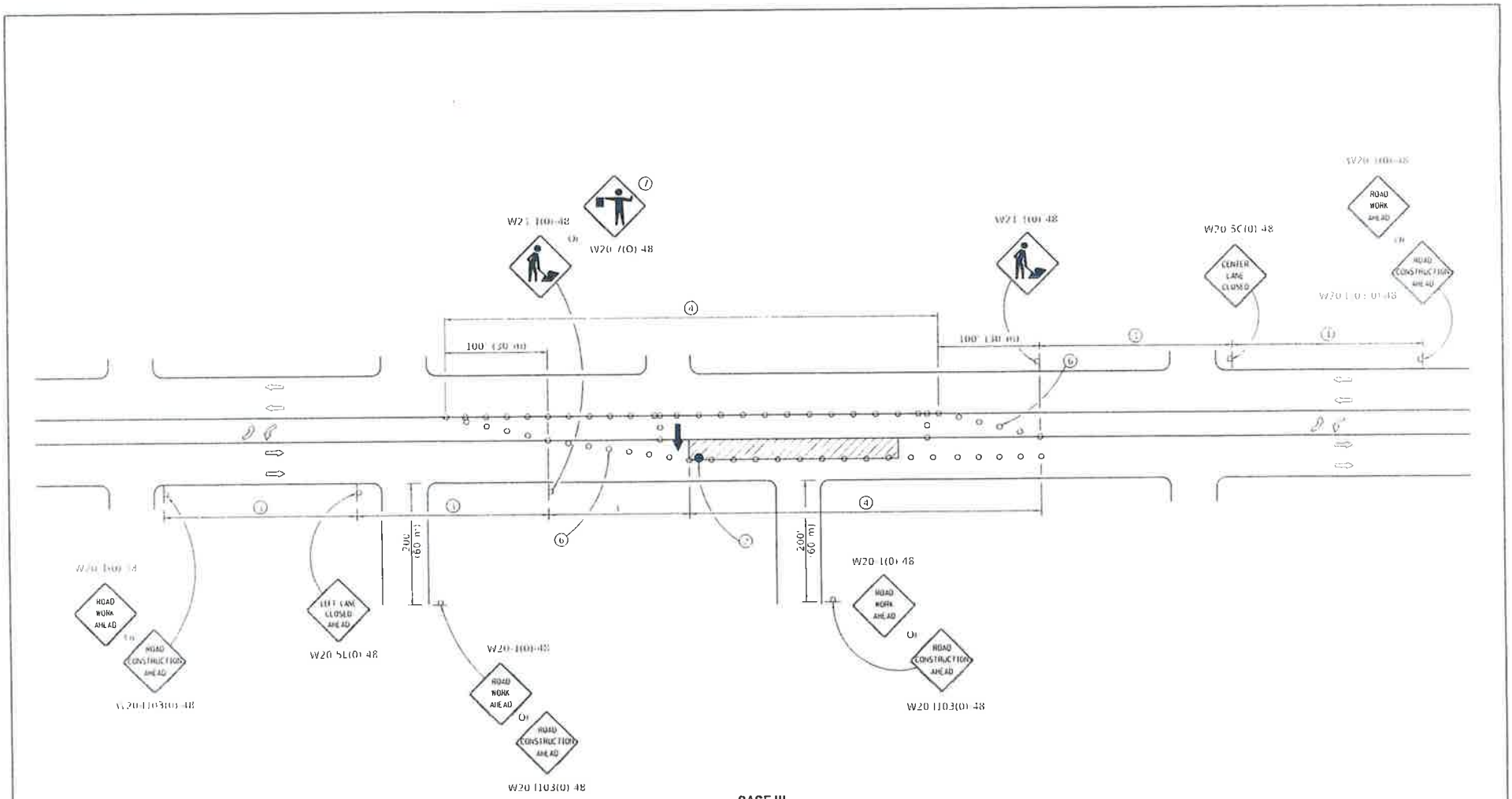

CASE III

Department of Transportation

URBAN LANE CLOSURE, MULTILANE, 2W WITH BIDIRECTIONAL LEFT TURN LANE

(Sheet 3 of 4)

STANDARD 701602-10

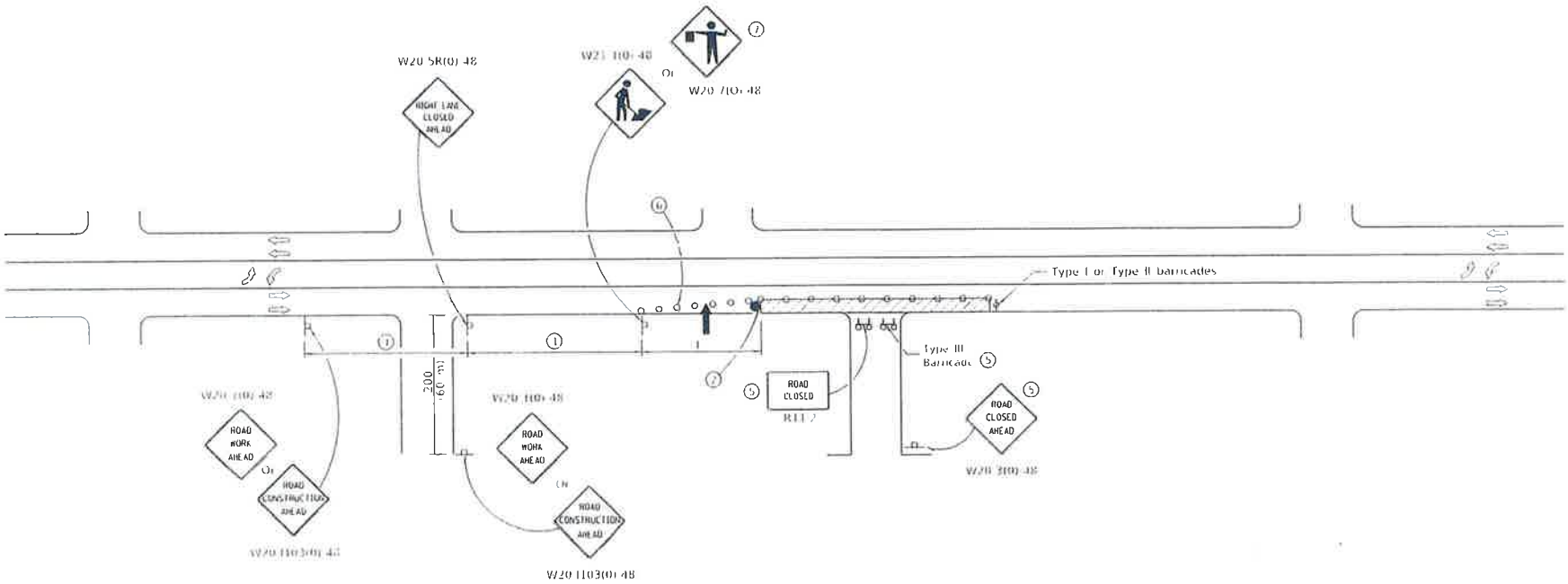

CASE IV

[illegible] Department of Transportation

URBAN LANE CLOSURE, MULTILANE, 2W WITH BIDIRECTIONAL LEFT TURN LANE

(Sheet 1 of 4)

STANDARD 701602-10

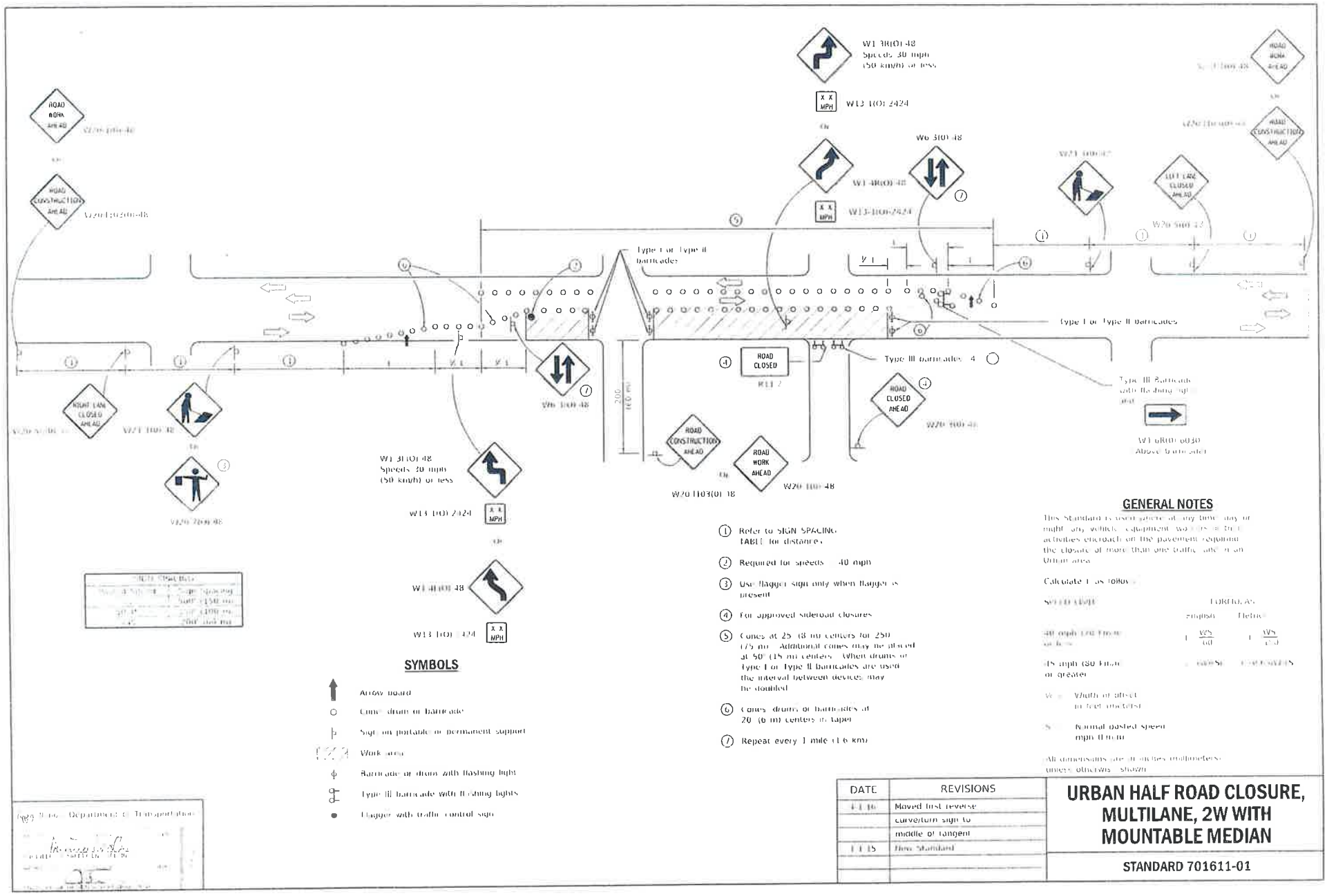

SPEED (MPH)	FORMULA	
	English	Metric
40 mph (64 km/h) or less	$L = \frac{WS}{60}$	$L = \frac{WS}{160}$
45 mph (80 km/h) or greater	$L = WS$	$L = WS^2/160$

W = Width of offset in feet (meters)

S = Normal posted speed mph (km/h)

All dimensions are in inches (millimeters) unless otherwise shown

SYMBOLS

- Arrow board
- Cone, drum or barricade
- Sign on portable or permanent support
- Work area
- Barricade or drum with flashing light
- Type III barricade with flashing lights
- Flagger with traffic control sign

1. Refer to SIGN SPACING TABLE for distances
2. Required for speeds 40 mph
3. Use flagger sign only when flagger is present
4. For approved sideroad closures
5. Cones at 25' (8 m) centers for 250' (75 m). Additional cones may be placed at 50' (15 m) centers. When drums or Type I or Type II barricades are used the interval between devices may be doubled
6. Cones, drums or barricades at 20' (6 m) centers in taper
7. Repeat every 1 mile (1.6 km)

GENERAL NOTES

This Standard is used anytime, at any time, day or night, any vehicle, equipment, workers or their activities encroach on the pavement requiring the closure of more than one traffic lane on an Urban area.

Calculate L as follows:

DATE	REVISIONS
11 16	Moved first reverse curve/turn sign to middle of tangent
11 15	New Standard

URBAN HALF ROAD CLOSURE, MULTILANE, 2W WITH MOUNTABLE MEDIAN

STANDARD 701611-01

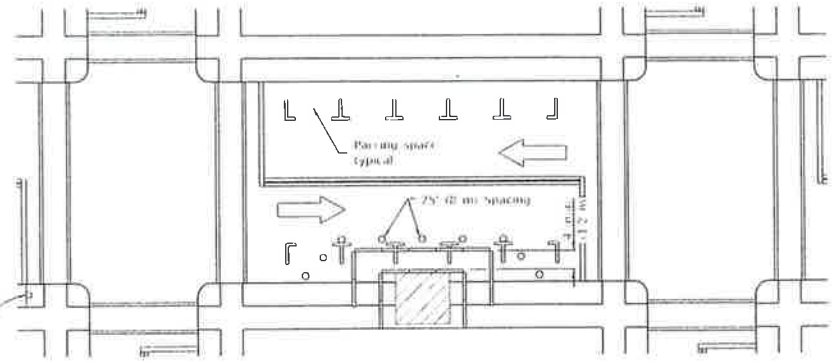

① Omit whenever duplicated by road work traffic control

① ROAD CONSTRUCTION AHEAD — W20 1103(01-48 for contract construction projects

or

① ROAD WORK AHEAD — W20 1(01-48 for maintenance and utility projects

SIDEWALK DIVERSION

GENERAL NOTES

This Standard is used where at any time pedestrian traffic must be rerouted due to work being performed.

This Standard must be used in conjunction with other Traffic Control & Protection Standards when roadway traffic is affected.

Temporary barriers shall be detectable and accessible.

The temporary pedestrian facilities shall be provided on the same side of the closed facilities whenever possible.

The SIDEWALK CLOSED – USE OTHER SIDE sign shall be placed at the nearest crosswalk or intersection to each end of the closure. Where the closure occurs at a corner, the signs shall be erected on the corners across the street from the closure. The SIDEWALK CLOSED signs shall be used at the ends of the actual closures.

Type III barricades and R11-2 detour signs shall be positioned as shown in ROAD CLOSED TO ALL TRAFFIC detail on Standard 701901.

All dimensions are in inches (millimeters) unless otherwise shown.

SYMBOLS

- Type III barricade
- Temporary pedestrian channelizing barricade

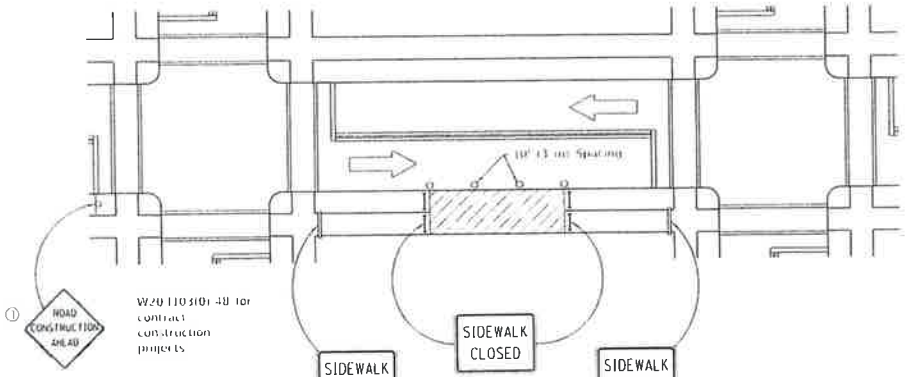

① ROAD CONSTRUCTION AHEAD — W20 1103(01-48 for contract construction projects

or

① ROAD WORK AHEAD — W20 1(01-48 for maintenance and utility projects

SIDEWALK CLOSURE

DATE	REVISIONS
4-1-16	Omitted orange safety fence from standard as this is covered in the std spec
1-1-12	Added SIDEWALK DIVERSION
	Modified appearance of plan views. Renamed Std

SIDEWALK, CORNER OR CROSSWALK CLOSURE

Sheet 1 of 2

STANDARD 701801-06

Approved: Department of Transportation

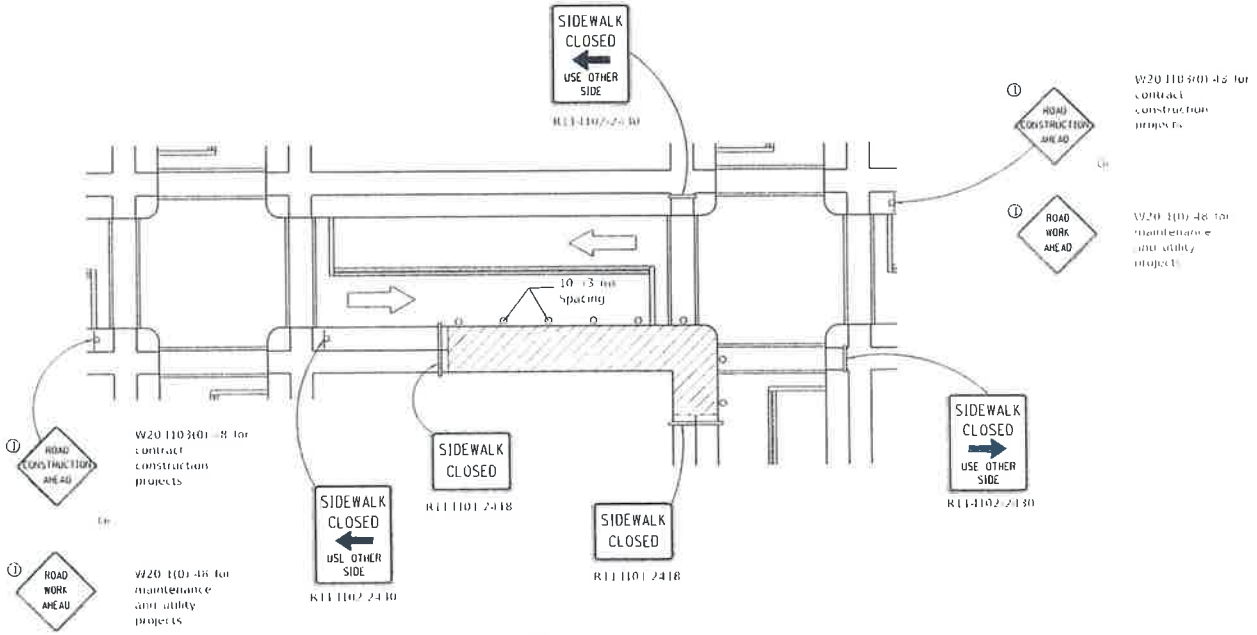

CORNER CLOSURE

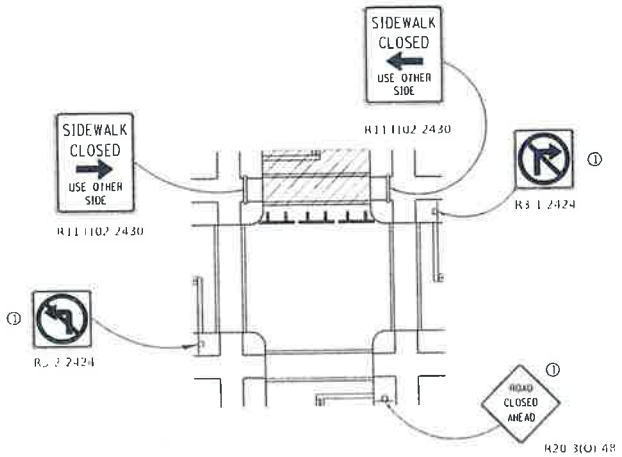

CROSSWALK CLOSURE

SIDEWALK, CORNER OR CROSSWALK CLOSURE

Sheet 2 of 21

STANDARD 701801-06

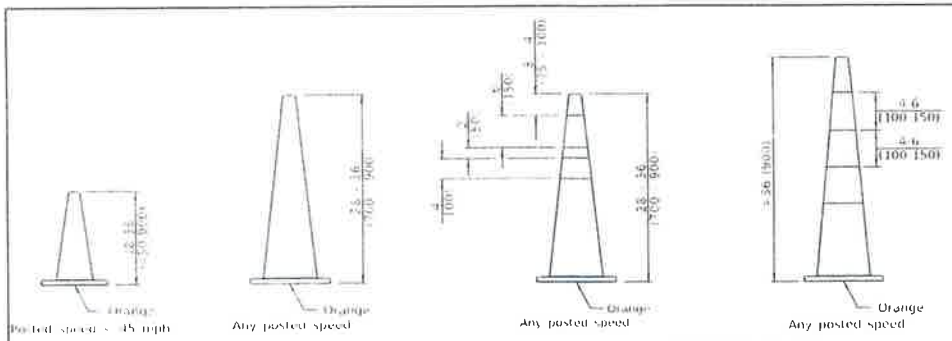

Posted speed < 45 mph

Any posted speed

Any posted speed

Any posted speed

DAYTIME USE

DAY OR NIGHTTIME USE

CONES

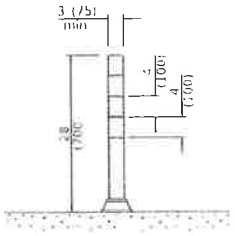

TUBULAR MARKER

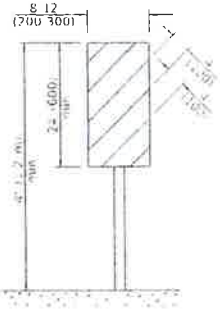

VERTICAL PANEL

POST MOUNTED

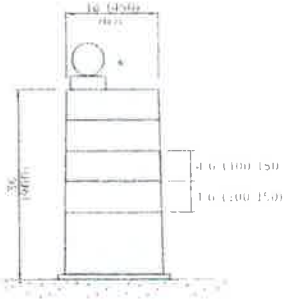

DRUM

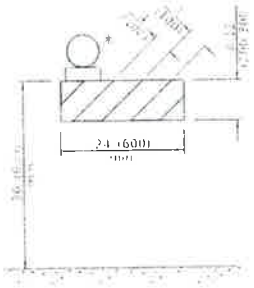

TYPE I BARRICADE

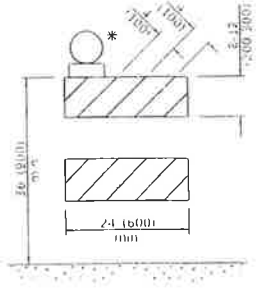

TYPE II BARRICADE

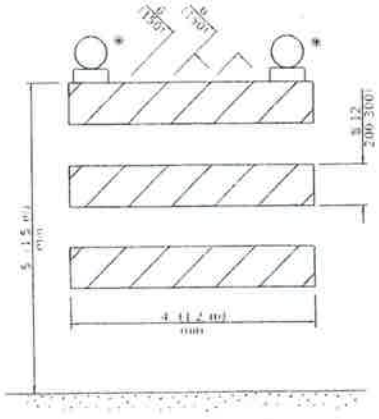

TYPE III BARRICADE

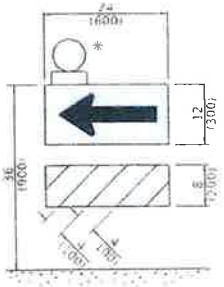

DIRECTION INDICATOR BARRICADE

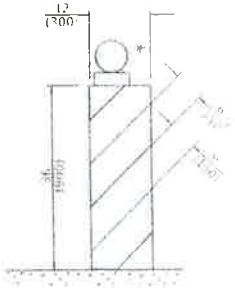

VERTICAL BARRICADE

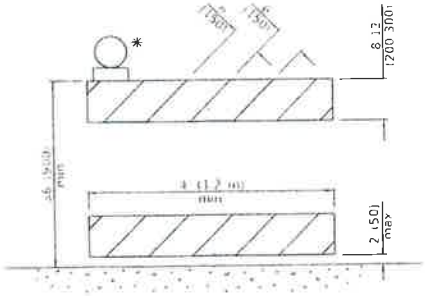

DETECTABLE PEDESTRIAN CHANNELIZING BARRICADE

* Warning lights if required

GENERAL NOTES

All heights shown shall be measured above the pavement surface

All dimensions are in inches (millimeters) unless otherwise shown

DATE	REVISIONS
1 1 19	Revised cone usage and
	added cones > 36" (900 mm) height
1 1 16	Revised END WORK ZONE
	SPEED LIMIT sign from
	orange to white background

TRAFFIC CONTROL DEVICES

(Sheet 1 of 3)

STANDARD 701901-08

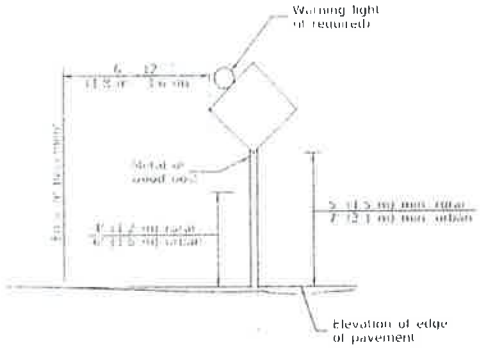

5' (1.5 m) min. from embankment

POST MOUNTED SIGNS

When curb or paved shoulder are present the dimension shall be 24 (600) to the face of curb or 6' (1.8 m) to the outside edge of the paved shoulder.

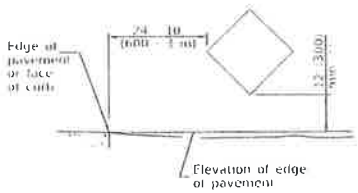

SIGNS ON TEMPORARY SUPPORTS

When work operations exceed four days, this dimension shall be 5' (1.5 m) min. If located behind other devices, the height shall be sufficient to be seen completely above the devices.

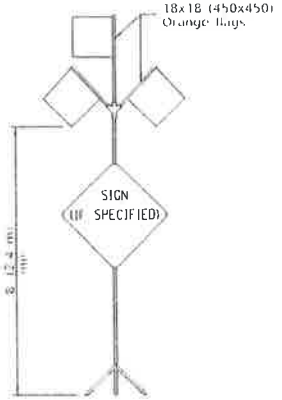

HIGH LEVEL WARNING DEVICE



G20-1104(0)-6036 G20-1105(0)-6024

This signing is required for all project 2 miles (3200 m) or more in length.

ROAD CONSTRUCTION NEXT X MILES sign shall be placed 500' (150 m) in advance of project limits.

END CONSTRUCTION sign shall be erected at the end of the job unless another job is within 2 miles (3200 m).

Dual sign displays shall be utilized on multi-lane highways.

WORK LIMIT SIGNING



W22-1050(0)-6612

R2-1-6648

R10-1108p-6618

R2-1100p-6618

Sign assembly as shown on Standards or as allowed by District Operations.

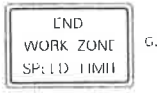

G20-1103-6036

This sign shall be used when the above sign assembly is used.

HIGHWAY CONSTRUCTION SPEED ZONE SIGNS

R10-1108p shall only be used along roadways under the jurisdiction of the State.



W12-4103-4848

WIDTH RESTRICTION SIGN

XX' XX" width and X miles are variable.

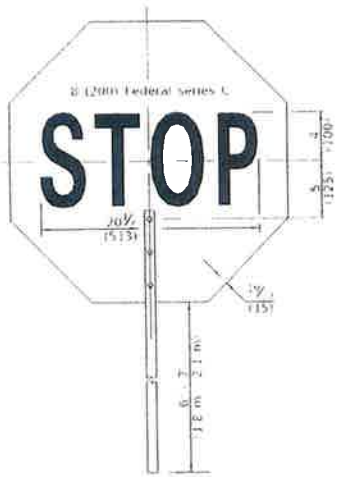

FRONT SIDE

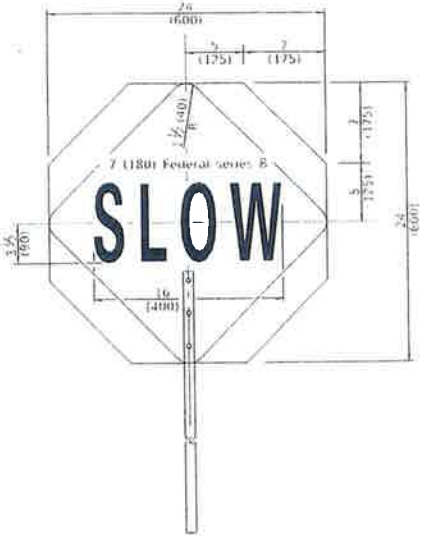

REVERSE SIDE

FLAGGER TRAFFIC CONTROL SIGN



See Department's for guidance

TRAFFIC CONTROL DEVICES

(Sheet 2 of 3)

STANDARD 701901-08

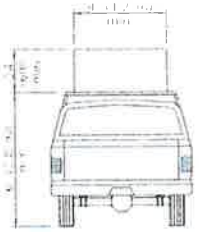

TYPE A
ROOF
MOUNTED

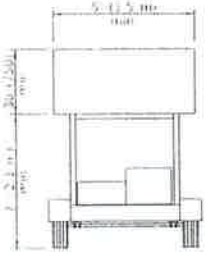

TYPE B
ROOF OR TRAILER
MOUNTED

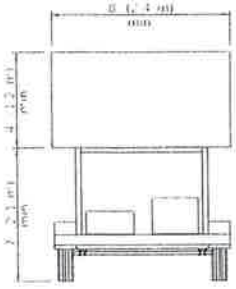

TYPE C
TRAILER
MOUNTED

ARROW BOARDS

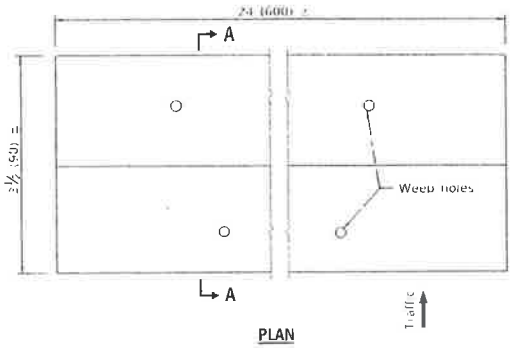

PLAN

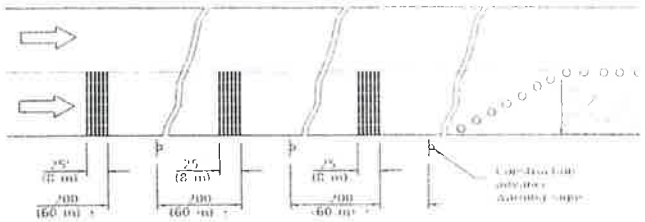

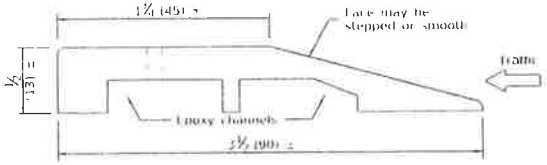

SECTION A-A

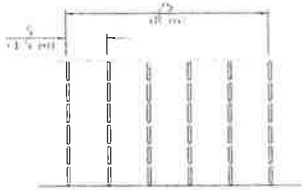

TYPICAL INSTALLATION

TEMPORARY RUMBLE STRIPS

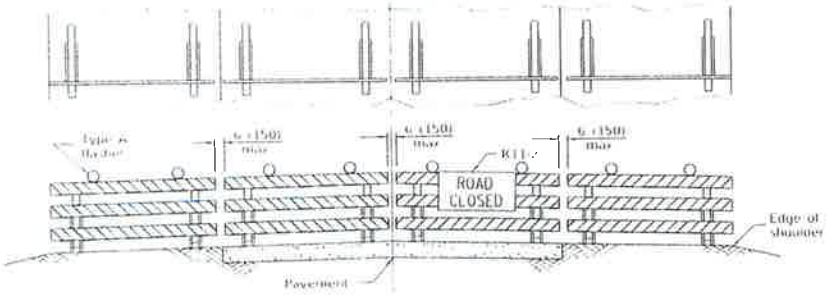

ROAD CLOSED TO ALL TRAFFIC

Reflectorized striping may be omitted on the back side of the barricades. If a Type III barricade with an attached sign panel which meets NCHRP 350 is not available, the sign may be mounted on an NCHRP 350 temporary sign support directly in front of the barricade.

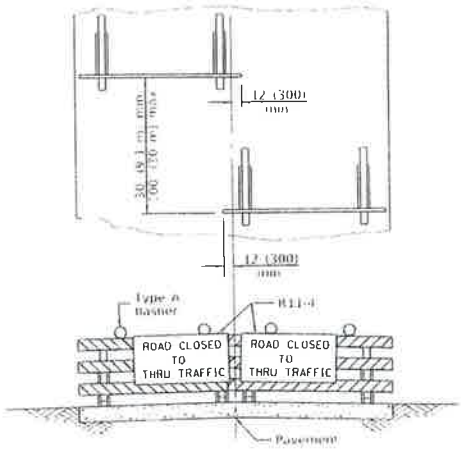

ROAD CLOSED TO THRU TRAFFIC

Reflectorized striping shall appear on both sides of the barricades. If a Type III barricade with an attached sign panel which meets NCHRP 350 is not available, the signs may be mounted on NCHRP 350 temporary sign supports directly in front of the barricade.

TYPICAL APPLICATIONS OF
TYPE III BARRICADES CLOSING A ROAD



TRAFFIC CONTROL DEVICES

STANDARD 701901-08

ATTACHMENT D

SPECIAL PROJECT REQUIREMENTS

1. General

The Work under this Contract consists primarily of sidewalk replacement along with limited concrete curb replacements at various locations within the Village. The actual locations and quantities will not be known at the time of bidding, however, it is the intention of the Village to systematically repair defective sidewalk, centralize the work in subdivisions and along arterial/collector streets. The project may also include individual locations throughout the Village. The approximate number of units for each Unit Price Item are estimated based on quantities performed on past projects and what is expected to be completed under this year's project using available funding. The quantities listed are illustrative and not firm or guaranteed.

2. P.C. Concrete Sidewalk Removal and Replacement - 5" – Local Streets

This Work shall consist of saw-cutting, removing and replacing 5" thick and 5' (or 4') wide P.C. Concrete sidewalk segments over existing base using 2" x 6" wooden forms (steel forms of equal rigidity are acceptable for replacements not exceeding 40' if true line and grade can be maintained), sloped 1/4 inch per foot towards the street for positive drainage. **Sidewalk crossing driveways shall be 6" thick.** The Contractor shall be responsible to rework or remove existing base materials or add CA6 aggregate base as needed to establish correct grade and thickness at no extra cost to the contract.

This work will only occur on local village streets excluding State and County right of ways and Village Roads that use IDOT Highway Standards listed in the special provisions for Traffic Control and Protection special provision for Non-Local Roads.

All newly poured concrete shall be struck-off, consolidated and finished to a true and even surface with floats and trowels. The surface shall be grooved every 5 feet at right angles to the centerline, edged with an edging tool, brush finished and sealed with a membrane curing compound as soon as practical without marring the surface. Full depth expansion joints will be required at all locations where the sidewalk abuts existing curb or pavement and at minimum fifty (50) foot intervals in the sidewalk. Sidewalks broken out across driveways must be poured within forty-eight (48) hours to avoid long term inconvenience to the residents.

Handicap walk replacement shall be in accordance with detail included in Attachment C for truncated dome requirements. Prefabricated truncated dome panels as manufactured by Armor-Tile Systems, ADA Solutions or Detectile Corporation shall be installed and **will be supplied by the Village** for any locations encountered on this project.

This work shall be paid for at the Contract Unit Price per square foot for P.C. Concrete Sidewalk Removal and Replacement - 5" – **Local Streets**, which price shall include all saw-cutting, excavation, aggregate base materials, curing compound, expansion joints, installation of Village supplied truncated dome panels, lawn restoration, additional 1" of concrete at driveway crossings and all appurtenances necessary to complete the specified Work.

3. P.C. Concrete Sidewalk Removal and Replacement - 5" – Non-Local Streets

This Work shall consist of saw-cutting, removing and replacing 5" thick and 5' (or 4') wide P.C. Concrete sidewalk segments over existing base using 2" x 6" wooden forms (steel forms of equal rigidity are acceptable for replacements not exceeding 40' if true line and grade can be maintained),

sloped 1/4 inch per foot towards the street for positive drainage. **Sidewalk crossing driveways shall be 6" thick.** The Contractor shall be responsible to rework or remove existing base materials or add CA6 aggregate base as needed to establish correct grade and thickness at no extra cost to the contract.

This work will only occur on non-local Village streets including State and County roads along with some Village Roads that use IDOT Highway Standards listed in the special provision for Traffic Control and Protection for Non-Local Roads.

All newly poured concrete shall be struck-off, consolidated and finished to a true and even surface with floats and trowels. The surface shall be grooved every 5 feet at right angles to the centerline, edged with an edging tool, brush finished and sealed with a membrane curing compound as soon as practical without marring the surface. Full depth expansion joints will be required at all locations where the sidewalk abuts existing curb or pavement and at minimum fifty (50) foot intervals in the sidewalk. Sidewalks broken out across driveways must be poured within forty-eight (48) hours to avoid long term inconvenience to the residents.

For all Non-Local Roads the work will exclude any intersection areas and will not require any ADA panels or ramps.

This work shall be paid for at the Contract Unit Price per square foot for P.C. Concrete Sidewalk Removal and Replacement - 5" – **Non-Local Streets**, which price shall include all saw-cutting, excavation, aggregate base materials, curing compound, expansion joints, installation of Village supplied truncated dome panels, lawn restoration, additional 1" of concrete at driveway crossings and all appurtenances necessary to complete the specified Work.

4. Combination Concrete Curb and Gutter Removal and Replacement, Type M-4.12 & B-6.12

This work shall consist of curb and gutter removal and replacement and installing new concrete curb and gutter to match existing, with two (2) #4 continuous epoxy coated reinforcing bars. Curb and gutter removed adjacent to driveways shall be replaced the following day (weather permitting). In no case shall driveways be left inaccessible over weekends.

Vertical forms shall be used on both front and back of all newly installed curb and gutter unless otherwise directed by the Project Supervisor.

Curbs shall be depressed at all driveways and sidewalks unless otherwise directed by the Project Supervisor.

This work shall be paid for at the Contract Unit Price per lineal foot for Combination Concrete Curb and Gutter Removal and Replacement, which price shall include saw-cutting, curing compound, lawn restoration and all appurtenances necessary to complete the specified Work.

5. Detectable Warnings

This work shall consist of removal and replacement of the existing sidewalk curb ramps as indicated in bid documents and as determine by the Engineer. All work and material for sidewalk curb and detectable warnings shall be in accordance with the applicable portions of Sections 424 and 440 of Standard Specifications and in compliance with American with Disability Act, Accessibility Guidelines (ADAAG).

Sidewalk ramps shall be installed at all street intersections and as determined by the engineer at other locations. All sidewalk ramps shall comply with Village standard and with Section 424.09

of Standard Specifications requirements. Refer to the attached Village standard and detail for plan sheet #10 & 11.

Prefabricated truncated cast iron dome panels as manufactured by ADA Solutions (Village preferred), Armor-Tile Systems or Armorcast Products Company or an approved equal will be supplied and installed by the contractor. Field cutting of detectable warning panels is not allowed and manufactured radial panels are required for curved applications

Sidewalk curb and ramps disturbed during the performance of this project shall be restored as follows: the base shall be restored with compacted crushed stone (CA-6) or original thickness but not less than a minimum thickness of three (3) inches.

Curb ramps shall be a minimum five (5) inches thick. The Contractor shall saw-cut the existing sidewalk at the beginning and end of each section to be removed. All necessary saw-cutting shall be considered included in the contract unit price. A three-fourths (3/4) inch performed expansion joint shall be installed wherever a proposed sidewalk curb ramp abuts an existing concrete sidewalk or combination curb and gutter.

Sidewalk curb ramps will be measured for payment as concrete sidewalk (as indicated in Concrete Sidewalk Replacement special provision). Only the stamped (with truncated domes) areas will be measured for payment as detectable warnings. Unless requested and approved by the Engineer differently, the detectable warnings will be paid per the following criteria:

a. For type A or B single ramp configuration-10.0 square feet (2'x5' area).
b. For type A or B double (corner) ramp confiquration-20.0 square feet (2'x10' area).

All new Portland Cement Concrete sidewalk curb ramps shall be treated with a protective coat application (Articles 420.8, 422.10 and 1023.01) of the Standard Specifications. This cost is incidental to the pay item.

All forms shall be removed from the site, by the Contractor, no more than twenty four (24) hours after form striping. Any excess concrete (on both sides of sidewalk curb and ramp) shall be removed to allow proper backfill and parkway restoration.

Basis of Payment

This work shall be measured in place and paid for at the Contract unit price per square foot for DETECTABLE WARNINGS.

6. Asphalt Pavement Patching – 2"

The contractor shall be responsible for all asphalt pavement restorations required due to sidewalk and curb replacement. Asphalt pavement shall include all driveway and street pavements. Prior to sidewalk or curb removal, the contractor shall saw-cut existing adjacent pavement at a point no more than 2' from the sidewalk/curb unless otherwise directed by the project supervisor. Pavement patching shall consist of adding CA-6 limestone base as needed and placing a compacted 2" layer of asphalt surface mix. The contractor will be required to provide safe access for residents by backfilling all excavated pavements with CA-6 crushed limestone no later than 3 days following installation of new sidewalk or curb. Removal of temporary stone and final pavement restoration must be completed no later than 2 weeks from installation of concrete sidewalk or curb.

Damage to existing driveways beyond the specified limits due to contractor negligence shall be the responsibility of the contractor and will not be eligible for payment. The contractor shall take the

utmost care to limit damage to private driveways and street pavement. **All asphalt work must be performed by a licensed asphalt paving contractor.**

This work shall be paid for at the contract unit price per square yard for Asphalt Pavement Patching – 2" and includes all saw-cutting, asphalt pavement removal, CA6 limestone base and installation and removal of temporary stone.

7. Sodding: A Professional Landscaping Company, pre-approved by the Project Engineer, must perform all permanent sod restoration. This work shall be in accordance with Sections 211 and 252 of the Standard Specifications except as modified herein.

All lawn restoration areas that the Project Engineer deems necessary for sod replacement will be mark out and will be permanently restored using sod. Prior to placing sod the area shall be prepped with 4" pulverized topsoil. Topsoil furnish and placement shall be included in this item and not be paid for separately.

Sod: Use top quality, 12 to 18 month old bluegrass sod consisting of a minimum of 3 varieties of Bluegrass evenly blended, such as Adelphi, Rugby, Glade, Parade or equivalent. Sod shall be ¾-inch thick, 24 inches wide, and 6-feet long with each piece being of uniform size and thickness for proper installation.

Sod shall be properly moist at the time of cutting and shall be laid within 24 hours of cutting to prevent excessive heat buildup. Restoration areas are depicted on the plans. Areas disturbed that are adjacent to the new pavement shall be restored with sod. Any additional sod restoration area shall be approved by the Engineer. The minimum width of the restoration shall be two (2) feet off the edge of the new pavement. Lay sod with ends staggered by a minimum of one (1) foot. Adjust the sod so seams are firmly butted together and curled edges are laid flat. Water thoroughly until subsoil is wet and whenever sod shows signs of drying or wilting. Sprinklers or nozzle hoses are acceptable. Continue watering until the Project is accepted. Watering shall be in accordance with Section 252. Fertilize immediately prior to placement. Fertilizer shall be in accordance with article 252.03 and shall be applied via mechanical spreader. Sod operations shall be repeated until a satisfactory uniform stand of grass is obtained as determined by Northbrook Public Works.

A well-made lawn is desired and the Contractor must perform the Work in accordance with the best lawn making practice. In the absence of rain, all sodded areas must be watered thoroughly. The Contractor must supply a watering truck at no additional cost to the Contract. Contractor shall furnish all hoses, meters, back flow preventers, and any other connections necessary to perform watering needs. The direct use of Northbrook Fire Hydrants will not be permitted for acquiring water for watering the restoration. Water must be obtained at the Village of Northbrook Public Works Center located at 655 Huehl Road where a hydrant meter is set up to monitor the exact amount of water discharged. The contractor is required to properly document all water used when drawing water. There is no fee for water used for this project.

This Work will be paid for at the Contract Unit Price, per square yard, for "Sodding".

8. Lawn Restorations

The Contractor shall use heavy duty plywood or polymer panels made specifically for equipment travel over grass parkways to minimize rutting and other lawn damage.

The Contractor shall be responsible for all lawn restorations directly related to the Work. All lawn areas excavated or disturbed for the placement of concrete forms or equipment shall be backfilled

with topsoil to the top edge of the poured sidewalk, ramp or curb. The topsoil shall be tamped to reduce voids and settlement and the surface fine graded prior to sowing seed. Lawn restorations shall be completed within five (5) business days of the completed concrete pour at each Work Site. **Barricades must remain over all excavated areas until holes are backfilled with topsoil.** Arthur Clesen, Inc.'s "sunny mix" seed or approved equal shall be used for all lawn restorations. The Village reserves the right to withhold partial payment to cover late season lawn restorations that are not fully established during the current growing season and need a second application of topsoil and seed in the spring.

The cost for this work shall be considered incidental to the Unit Price Items contained in this Contract.

9. Sprinkler Systems, Fences & Other Surface Structures

All lawn sprinkler systems, fences, adjacent lawn and pavement areas and other surface structures shall be protected during the performance of the Work. All said items that are moved or damaged due to the performance of the Work shall be repaired and/or replaced within five (5) business days at the Contractor's expense. No additional compensation will be allowed.

10. Traffic Control and Protection Special

This work shall be done in accordance with applicable portions of Section 701 of the Standard Specifications, the Supplemental Specifications, the "Illinois Manual on Uniform Traffic Control Devices for Streets and Highways", and any details and Highway Standards contained in the Plans and Special Provisions, and the Special Provisions contained herein, except as modified herein.

Furnishing, installing, maintaining, relocating and removing all traffic control devices (Type 1 barricades) equipped with **flashing yellow lights** used for the purpose of regulating, warning or directing pedestrian or vehicular traffic during construction shall be considered incidental to the cost of the Contract. The Contractor shall be responsible for flaggers required during the Work in order to regulate and maintain 2-way traffic in the vicinity of the Work.

All traffic control devices used on this project must conform to the "Standards Specifications for Traffic Control Devices for Streets and Highways". Barricades without flashing yellow lights will be rejected and must be replaced immediately.

Special Attention is called to Article 107.09 of the Standard Specifications and the following Highway Standards contained herein, relating to traffic control.

HIGHWAY STANDARDS: See Attachment C

The Contractor shall contact the Village at least 72 hours in advance of beginning work. Construction operations shall be conducted in a manner such that streets will be open to emergency traffic and accessible as required to local traffic. At least 24 hour advanced notice shall be provided to residents, police, fire, school districts and trash haulers when access is going to be limited. Removal and replacement of curb and gutter and driveway shall be planned so as to minimize the driveway outage duration. The work shall be accomplished such that the streets will be open to traffic at the end of each working day.

Access by emergency vehicles and school busses through the job sites shall be of major and continuous consideration in the Contractor's scheduling and sequence of operations.

Basis of Payment

This Work will not be paid for separately, but shall be considered incidental to the Unit Price for P.C. Concrete Sidewalk Removal and Replacement - 5" Local Streets and P.C. Concrete Sidewalk Removal and Replacement - 5" Non-Local Streets.

11. Saw-Cutting

This Work shall consist of saw-cutting and scoring control joints on existing concrete sidewalks, pavements, driveways or curb and gutters to a sufficient depth to ensure a clean break at the time of removal. The concrete slurry must be cleaned off with water/broom.

This Work will not be paid for separately, but shall be considered incidental to the Unit Price Items contained in this Contract.

12. Excavation Material

All excavation material shall be promptly and directly placed in dump trucks thereby reducing restoration to lawn areas. Lawful disposal of excavation materials shall be considered incidental to the cost of the Contract.

13. Trees

The Contractor shall use the utmost caution when working near parkway trees to avoid damage to the trunk, branches and root system. Contractor will be held responsible for the full cost to replace any trees damaged due to negligent operations.

Tree trimming for clearance of construction equipment and major root removal shall only be done under the authorization of the Project Engineer and shall be incidental to the cost of the Contract.

Root pruning of trees will be performed by Village crews where necessary prior to removal and replacement of the sidewalk. The Village will make every effort to have all root pruning completed before commencement of the project, however, should simultaneous operations be required, the contractor shall work with the Village to coordinate schedules. Root pruning is essential to help limit damage to parkway trees from sidewalk replacement operations and minimize future damage to new sidewalk.

14. Renewal for Subsequent Project Years

Owner reserves the right, but shall be under no obligation, to offer to renew this Contract with Contractor for up to three additional project years (2026, 2027, 2028) on an annual basis with cost adjustments not exceeding the annual percentage increase in the Chicago Consumer Price Index for all urban consumers for the previous twelve month period. The total contract adjustment at any adjustment period may not exceed the Chicago Consumer Price Index from the date of the contract.

Owner shall notify Contractor of his desire to renew the Contract for an additional project year on or about March 1st of that project year. Contractor shall notify Owner not later than March 15th whether or not he will enter into a renewal of the Contract with Owner at the adjusted Unit Prices for that year. Note quantities will vary each year. The Village expects to be able to provide the total project budget in the renewal letter. A renewal of the contract will require renewal of insurance, insurance of new bonds, and contractor obtaining new Cook County permits and bonds. All requirements of the contract are still in effect. Contractor must pay the current prevailing wage.

Bond No: 439885M

VILLAGE OF NORTHBROOK

CONTRACT FOR 2025 SIDEWALK

REMOVAL AND REPLACEMENT PROJECT

PERFORMANCE BOND

KNOW ALL MEN BY THESE PRESENTS: that Schroeder And Schroeder, Inc., as Principal, hereinafter called Contractor, and Ohio Farmers Insurance Company as Surety, a corporation organized and existing under the laws of the State of Illinois, hereinafter called Surety, are held and firmly bound unto Village of Northbrook, 1225 Cedar Lane, Northbrook, Illinois 60062, as Obligee, hereinafter called Owner, in the full and just sum of Three hundred and Seventy seven Thousand nine Hundred and Zero Dollars and Zero Cents ($377,900.00), for the payment of which sum of money well and truly to be made, Contractor and Surety bind themselves, their heirs, executors, administrators, successors and assigns, jointly and severally, firmly by these presents, said amount to include payment of actual costs and damages and for attorneys' fees, architectural fees, design fees, engineering fees, accounting fees, testing fees, consulting fees, administrative costs, court costs, interest and any other fees and expenses resulting from or incurred by reason of Contractor's failure to promptly and faithfully perform its contract with Owner, said contract being more fully described below, and to include attorneys' fees, court costs and administrative and other expenses necessarily paid or incurred in successfully enforcing performance of the obligation of Surety under this bond.

WHEREAS, Contractor has entered into a written agreement dated February 20, 2025, with Owner entitled "Contract Agreement Between Village of Northbrook and Schroeder & Schroeder, Inc. for the 2025 Sidewalk Removal and Replacement Project" (the "Contract"), the terms and conditions of which are by this reference incorporated herein as though fully set forth herein.

NOW, THEREFORE, THE CONDITION OF THIS OBLIGATION IS SUCH THAT if Contractor shall well, truly and promptly perform all the undertakings, covenants, terms, conditions and agreements of said Contractor under the Contract, including, but not limited to, Contractor's obligations under the Contract: (1) to provide, perform and complete at the Work Site and in the manner specified in the Contract all necessary work, labor, services, transportation, equipment, materials, apparatus, machinery, tools, fuels, gas, electric, water, waste disposal, information, data and other means and items necessary for the removal and replacement of defective portland cement concrete sidewalk segments; and removal and replacement of selected combination concrete curb and gutter segments; (2) to procure and furnish all permits, licenses and other governmental approvals and authorizations necessary in connection therewith except as otherwise expressly provided in the Special Conditions of Contract; (3) to procure and furnish all bonds, certificates and policies of insurance specified in the Contract; (4) to pay all applicable federal, state and local taxes; (5) to do all other things required of Contractor by the Contract; and (6) to provide, perform and complete all of the foregoing in a proper and workmanlike manner and in full compliance with, and as required by and pursuant to, the Contract; all of which is herein referred to as the "Work," whether or not any of said Work enter into and become component parts of the improvement contemplated, then this obligation shall be null and void; otherwise it shall remain in full force and effect.

Surety, for value received, hereby stipulates and agrees that no changes, modifications, alterations, omissions, deletions, additions, extensions of time, or forbearances on the part of either Owner or Contractor to the other in or to the terms of said Contract; in or to the schedules, plans, drawings or specifications; in or to the method or manner of performance of the Work; in or to Owner-furnished facilities, equipment, material, service or sites; or in or to the mode or manner of payment therefor, shall in any way release Contractor and Surety or either or any of them, or any of their heirs,

executors, administrators, successors or assigns or affect the obligations of Surety on this bond, all notice of any and all of the foregoing changes, modifications, alterations, omissions, deletions, additions, extensions of time or forbearances, and notice of any and all defaults by Contractor or of Owner's termination of Contractor being hereby waived by Surety.

Notwithstanding anything to the contrary in the foregoing paragraph, in no event shall the obligations of Surety under this bond in the event of Contractor's default be greater than the obligations of Contractor under the Contract in the absence of such Contractor default.

In the event of a default or defaults by Contractor, Owner shall have the right to take over and complete the Contract upon 30 calendar days' written notice to Surety, in which event Surety shall pay Owner all costs incurred by Owner in taking over and completing the Contract.

At its option, Owner may instead request that Surety take over and complete the Contract, in which event Surety shall take reasonable steps to proceed promptly with completion no later than 30 calendar days from the date on which Owner notifies Surety that Owner wants Surety to take over and complete the Contract.

Owner shall have no obligation to actually incur any expense or correct any deficient performance of Contractor in order to be entitled to receive the proceeds of this bond.

No right of action shall accrue on this bond to or for the use of any person or corporation other than Owner or the heirs, executors, administrators or successors of Owner.

Signed and sealed this 24th day of March, 2025.

Attest/Witness:

By: _____

Title: SECRETARY

PRINCIPAL: **Schroeder & Schroeder, Inc.**

By: _____
Joe Vrabel

Title: _____
President

Attest/Witness: Andrew Brandner

By: Andrew Brandner

Title: Surety Account Executive

SURETY: Ohio Farmers Insurance Company

By: Veronica O'Connor

Title: Veronica O'Connor - Attorney-in-Fact

Telephone: 630-544-3753

SEE GENERAL INSTRUCTIONS TO BIDDERS, SECTION 7.
FOR SIGNATURE REQUIREMENTS

OHIO FARMERS INSURANCE COMPANY ★ CHARTERED ★ 1848

Bond No: 439885M

VILLAGE OF NORTHBROOK

CONTRACT FOR 2025 SIDEWALK

REMOVAL AND REPLACEMENT PROJECT

LABOR AND MATERIAL PAYMENT BOND

KNOW ALL MEN BY THESE PRESENTS: that Schroeder And Schroeder, Inc., as Principal, hereinafter called Contractor, Ohio Farmers Insurance Company Surety, a corporation organized and existing under the laws of the State of Illinois hereinafter called Surety, are held and firmly bound unto Village of Northbrook, 1225 Cedar Lane, Northbrook, Illinois, as Obligee, hereinafter called Owner, for the use and benefit of itself and of claimants as hereinafter defined, in the full and just sum of Three hundred and Seventy Seven Thousand Nine Hundred and Zero Dollars and Zero Cents ($377,900.00), to be paid to it or the said claimants or its or their assigns, to which payment well and truly to be made Contractor and Surety bind themselves, their heirs, executors, administrators, successors and assigns, jointly and severally, firmly by these presents, said amount to include attorney's fees, court costs and administrative and other expenses necessarily paid or incurred in successfully enforcing performance of the obligation of Surety under this bond.

WHEREAS, Contractor has entered into a written agreement dated February 20, 2025, with Owner entitled "Contract Agreement Between Village of Northbrook and Schroeder & Schroeder, Inc. for the 2025 Sidewalk Removal and Replacement Project" (the "Contract"), the terms and conditions of which are by this reference incorporated herein as though fully set forth herein

NOW, THEREFORE, THE CONDITION OF THIS OBLIGATION IS SUCH THAT if Contractor shall promptly pay or cause to be paid all sums of money that may be due to any claimant with respect to Contractor's obligations under the Contract: (1) to provide, perform and complete at the Work Site and in the manner specified in the Contract all necessary work, labor, services, transportation, equipment, materials, apparatus, machinery, tools, fuels, gas, electric, water, waste disposal, information, data and other means and items necessary for the removal and replacement of defective portland cement concrete sidewalk segments; and removal and replacement of selected combination concrete curb and gutter segments; (2) to procure and furnish all permits, licenses and other governmental approvals and authorizations necessary in connection therewith except as otherwise expressly provided in the Special Conditions of Contract; (3) to procure and furnish all bonds, certificates and policies of insurance specified in the Contract; (4) to pay all applicable federal, state and local taxes; (5) to do all other things required of Contractor by the Contract; and (6) to provide, perform and complete all of the foregoing in a proper and workman-like manner and in full compliance with, and as required by and pursuant to, the Contract; all of which is herein referred to as the "Work," whether or not any of said Work enter into and become component parts of the improvement contemplated, then this obligation shall be null and void; otherwise it shall remain in full force and effect.

For purpose of this bond, a claimant is defined as one having a direct contract with Contractor or with a subcontractor of Contractor to provide, perform or complete any part of the Work.

Contractor and Surety hereby jointly and severally agree that every claimant who has not had all just claims for the furnishing of any part of the Work paid in full, including, without limitation, all claims for amounts due for materials, lubricants, oil, gasoline, rentals of or service or repairs on

machinery, equipment, and tools consumed or used in connection with the furnishing of any part of the Work, may sue on this bond for the use of such claimant, may prosecute the suit to final judgment for such sum or sums as may be justly due such claimant, and may have execution therein; provided, however, that Owner shall not be liable for the payment of any costs or expenses of any such suit. The provisions of 30 ILCS 550/1 and 2 [formerly Ill. Rev. Stat. ch. 29, 15 and 16] shall be deemed inserted herein, including the time limits within which notices of claim must be filed and actions brought under this bond.

Contractor and Surety hereby jointly agree that Owner may sue on this bond if Owner is held liable to, or voluntarily agrees to pay, any claimant directly, but nothing in this bond shall create any duty on the part of Owner to pay any claimant.

Surety, for value received, hereby stipulates and agrees that no changes, modifications, alterations, omissions, deletions, additions, extensions of time or forbearances on the part of Owner or Contractor to the other in or to the terms of said Contract; in or to the schedules, plans, drawings or specifications; in or to the method or manner of performance of the Work; in or to Owner-furnished facilities, equipment, material, service or site; or in or to the mode or manner of payment therefor shall in any way release Contractor and Surety or either or any of them, or any of their heirs, executors, administrators, successors or assigns, or affect the obligations of said Surety on this bond, all notice of any and all of the foregoing changes, modifications, alterations, omissions, deletions, additions, extensions of time or forbearances and notice of any and all defaults by Contractor or of Owner's termination of Contractor being hereby waived by Surety.

Signed and sealed this 24th day of March, 2025.

Attest/Witness:

By: _____

Title: SECRETARY

PRINCIPAL: **Schroeder & Schroeder, Inc.**

By: _____
Joe Vrabel

Title: **President**

Attest/Witness: Andrew Brandner

By: Andrew Brandner

Title: Surety Account Executive

SURETY Ohio Farmers Insurance Company

By: Veronica O'Connor

Title: Veronica O'Connor - Attorney-in-Fact

Telephone: 630-544-3753

SEE GENERAL INSTRUCTIONS TO BIDDERS, SECTION 7.
FOR SIGNATURE REQUIREMENTS

OHIO FARMERS INSURANCE COMPANY ★ CHARTERED ★ 1848

THIS POWER OF ATTORNEY SUPERCEDES ANY PREVIOUS POWER BEARING THIS SAME POWER # AND ISSUED PRIOR TO 05/16/24, FOR ANY PERSON OR PERSONS NAMED BELOW.

General
Power
of Attorney

CERTIFIED COPY

POWER NO. **1212962 02**

Westfield Insurance Co.
Westfield National Insurance Co.
Ohio Farmers Insurance Co.
Westfield Center, Ohio

presents make, constitute and appoint
WILLIAM H. HAYES, HOWARD A. WEISS, JOEL C. EDSON, VERONICA O'CONNOR, MAGGIE GRANHOLM, JOINTLY OR SEVERALLY

suretyship in any penal limit. - - -

Ordinance 2018-34

Ordinance Ascertaining the Prevailing Rate of Wages in Cook County

Passed by the Board of Trustees, 6/12/2018
Printed and Published 6/13/2018

Printed and Published in Pamphlet Form
by Authority of the
President and Board of Trustees
VILLAGE OF NORTHBROOK
COOK COUNTY, ILLINOIS

I hereby certify that this document
was properly published on the date
stated above.

/s/ Debra J. Ford
Village Clerk

Ordinance 2018-34

BE IT ORDAINED by the President and Board of Trustees of the Village of Northbrook, County of Cook and State of Illinois THAT:

Ordinance Ascertaining the Prevailing Rate of Wages in Cook County

shall be, and is hereby, adopted as follows:

Section 1. BACKGROUND

The State of Illinois has enacted the Prevailing Wage Act, 820 ILCS 130/0.01 *et seq.* (2012) ("***Act***"). The Act requires that the Village of Northbrook ("***Village***") investigate and ascertain the prevailing rate of wages for laborers, mechanics and other workers in Cook County employed in performing construction of public works for the Village. Any term appearing in this Ordinance that is also used in the Act shall have the same meaning as that ascribed to it in the Act.

Section 2. WAGE RATE DETERMINATION

To the extent and as required by the Act, the general prevailing rate of wages in Cook County for laborers, mechanics and other workers engaged in construction of public works coming under the jurisdiction of the Village is hereby ascertained and determined to be the same as the prevailing rate of wages for construction work in Cook County as determined by the State of Illinois Department of Labor as up to May 24, 2018. A copy of that determination is attached hereto, and by this reference incorporated herein, as ***Exhibit A***. As required by the Act, any and all revisions of the prevailing rate of wages in Cook County by the State of Illinois Department of Labor shall supersede the Department of Labor's May 2018 determination and apply to any and all public works construction undertaken by the Village. The most recent revisions to the prevailing rate of wages in Cook County by the Illinois Department of Labor are available for access by the public on the Department's official website.

Section 3. PUBLIC WORKS CONSTRUCTION

Nothing herein contained shall be construed to apply the general prevailing rate of wages for Cook County as herein ascertained to any work or employment except public works construction of the Village conducted in Cook County to the extent required by the Act.

Section 4. PUBLIC POSTING

The Village Clerk is hereby directed to publicly post or keep available for inspection by any interested party in the main office of the Village the determination of the prevailing rate of wages for Cook County as set forth in this Ordinance.

Section 5. FILING, PUBLICATION

The Village Manager is hereby directed to:

(a) promptly file a certified copy of this Ordinance with the Department of Labor of the State of Illinois.

(b) cause a notice of this determination to be published in a newspaper of general circulation within the area, within thirty (30) days of its filing with the Department of Labor of the State of Illinois.

(c) mail a copy of this determination to any employer, and to any association of employers and to any person or association of employees who have filed their names and addresses, requesting copies of any determination stating the particular rates and the particular class of workers whose wages will be affected by such rate.

(d) attach a copy of this determination or of the revised determination of prevailing rate of wages then in effect to all public works construction contracts.

Section 6. EFFECTIVE DATE.

This Ordinance shall be in effect upon its passage, approval, and publication in the manner provided by law.

Adopted: 6/12/2018

RESULT:	**ADOPTED BY CONSENT VOTE [UNANIMOUS]**
MOVER:	James Karagianis, Trustee
SECONDER:	Kathryn Ciesla, Trustee
AYES:	Frum, Karagianis, Buehler, Ciesla, Israel, Collison, Han

ATTEST:

/s/ Sandra E. Frum
Village President

/s/ Debra J. Ford
Village Clerk

VILLAGE OF NORTHBROOK (OWNER)
CONTRACT FOR
FY 25/26 SIDEWALK REMOVAL AND REPLACEMENT PROGRAM
BETWEEN VILLAGE OF NORTHBROOK AND *CONTRACTOR NAME*
APPLICATION FOR PROGRESS PAYMENT NO. _____

FOR THE PERIOD: _____ TO _____, INCLUSIVE SHEET _____ OF _____ SHEETS

CONTRACTOR'S NAME AND ADDRESS: _____

CONTRACT PRICE (LUMP SUM): $_____ ESTIMATED COST (UNIT PRICE): $_____

	NO. AND DESCRIPTION OF UNIT			WORK PERFORMED TO DATE		
ITEM NO. (1)	DETAILED ESTIMATE (2)	UNIT PRICE (3)	COST ESTIMATED (4)	NO. OF UNITS (5)	AMOUNT EARNED TO DATE (6)	% COMPLETE (7)

FOR THE PERIOD: _____ TO _____, INCLUSIVE SHEET _____ OF _____ SHEETS

VILLAGE OF NORTHBROOK (OWNER)
CONTRACT FOR
FY 25/26 SIDEWALK REMOVAL AND REPLACEMENT PROGRAM
BETWEEN VILLAGE OF NORTHBROOK AND *CONTRACTOR NAME*
APPLICATION FOR PROGRESS PAYMENT NO. _____

CONTRACTOR'S NAME AND ADDRESS: _____

CONTRACT PRICE (LUMP SUM): $_____ ESTIMATED COST (UNIT PRICE): $_____

_____

	NO. AND DESCRIPTION OF UNIT			WORK PERFORMED TO DATE		
ITEM NO. (1)	DETAILED ESTIMATE (2)	UNIT PRICE (3)	COST ESTIMATED (4)	NO. OF UNITS (5)	AMOUNT EARNED TO DATE (6)	% COMPLETE (7)
	Future Items	----------		----------	----------	----------
		----------		----------	----------	----------
		----------		----------	----------	----------
		----------		----------	----------	----------
		----------		----------		----------
		----------	----------	----------		----------

VILLAGE OF NORTHBROOK (OWNER)
CONTRACT FOR
FY 25/26 SIDEWALK REMOVAL AND REPLACEMENT PROGRAM
BETWEEN VILLAGE OF NORTHBROOK AND *CONTRACTOR NAME*
APPLICATION FOR PROGRESS PAYMENT NO. _____

		---------- - ---------- - ---------- -	---------- ----------	---------- ----------		---------- ----------

VILLAGE OF NORTHBROOK (OWNER)
CONTRACT FOR
FY 25/26 SIDEWALK REMOVAL AND REPLACEMENT PROGRAM
BETWEEN VILLAGE OF NORTHBROOK AND *CONTRACTOR NAME*
APPLICATION FOR PROGRESS PAYMENT NO. _____

CERTIFICATE OF CONTRACTOR OR ITS DULY AUTHORIZED REPRESENTATIVE: To the best of my knowledge and belief, I certify that all items, units, quantities, and prices of Work and material shown on the face of Sheet(s) _____ of this application are correct, that all Work has been performed and materials supplied in full accordance with the terms and conditions of the Contract between the undersigned as Contractor and Village of Northbrook as Owner, dated: _____, and all authorized changes thereto; that the following is a true and correct statement of the Contract account up to and including the last day of the period covered by this application and that no part of the "Total Amount Due" has been received:

(a) Total amount earned (col. 6)..... $ _____

(b) Retained percentage (10%)..... $ _____

(c) Total earned less retained percentage..... $ _____

(d) Total previously certified (Line (c) from previous application no. _____ _____)..... $ _____

(e) Amount due this estimate..... $ _____

(f) Excess cost of field engineering and inspection .....(Subtract) $ _____

(g) Total Amount Due..... $ _____

I further certify that all claims outstanding as of this date against the undersigned as Contractor for labor, materials, and expendable equipment employed in the performance of said Contract up to this date have been paid in full in accordance with the requirements of said Contract. I further certify that all prior payments have been properly applied to the payment or reimbursement of the costs with respect to which they were paid.

DATE: _____ _____
CONTRACTOR

By: _____
Title: _____

CERTIFICATE OF THE CONSULTING ENGINEERS OF THE VILLAGE OF NORTHBROOK: I certify that I have verified this application, and that to the best of my knowledge and belief it is a true and correct statement of Work performed and materials supplied under the Contract, and that Contractor's certified statement of account and the amount due is correct and just, and that all Work and materials included in this application have been performed in full accordance with the terms and conditions of the Contract and authorized changes thereto.

DATE: _____ _____
NAME

By: _____
Title: _____

VILLAGE OF NORTHBROOK RECOMMENDATION FOR PAYMENT: Approved and Payment Recommended:

DATE: _____ VILLAGE OF NORTHBROOK

By: _____
Title: _____

#9899512_v1

SWORN STATEMENT TO OWNER

STATE OF _____)
)
COUNTY OF _____)

The affiant, _____, being first duly sworn, on oath deposes and says that: Affiant is the _____ of _____, which has a Contract with _____, for _____ _____ for the following described premises, to wit: _____ _____; and Affiant is authorized to make this Sworn Statement to Owner.

Affiant further deposes and says: That, for the purpose of said Contract, the following persons have been contracted with, and have or are furnishing and preparing materials for, and have done or are doing labor on, said improvement; that there is due and to become due them, respectively, the amounts set opposite their names for materials or labor as stated; and that this Sworn Statement to Owner is a full, true, and complete statement of all such persons, the amounts paid and the amount due or to become due to each.

1 Subcontractor or Supplier	2 Kind of Work	3 Amount Of Contract	4 Retention (Incl. Current)	5 Net Previously Paid	6 Net Amount This Payment	7 Balance To Complete
TOTAL						

AMOUNT OF ORIGINAL CONTRACT	$	WORK COMPLETED TO DATE	$
ADDITIONS TO CONTRACT	$	LESS ___% RETAINED	$
TOTAL CONTRACT AND ADDITIONS	$	NET AMOUNT EARNED	$
CREDITS TO CONTRACT	$	NET PREVIOUSLY PAID	$
ADJUSTED TOTAL CONTRACT	$	NET AMOUNT OF THIS PAYMENT	$
		BALANCE TO COMPLETE (Inc. Retention)	$

It is understood that the total amount paid to date plus the amount requested in this application shall not exceed 90% of the cost of work completed to date unless otherwise approved by Owner.

I herewith tender Waivers of Lien for all materials and labor furnished.

Signed: _____

Name: _____

Title: _____

Subscribed and sworn to be before me
this ___ day of _____, 20__.

_____
Notary Public

This Sworn Statement to Owner must be submitted to Owner before each and every payment.

VILLAGE OF NORTHBROOK
CONTRACT FOR
FY 25/26 SIDEWALK REMOVAL AND REPLACEMENT PROGRAM
BETWEEN VILLAGE OF NORTHBROOK AND *CONTRACTOR NAME*
CHANGE ORDER

CHANGE ORDER NUMBER _____

I. ITEM DESCRIPTIONS

ITEM 1.

Description of Changes Involved:

Reason for Change:

Revision in Price

ITEM 2.

Description of Changes Involved:

Reason for Change:

Revision in Price

VILLAGE OF NORTHBROOK
CONTRACT FOR
FY 25/26 SIDEWALK REMOVAL AND REPLACEMENT PROGRAM
BETWEEN VILLAGE OF NORTHBROOK AND *CONTRACTOR NAME*
CHANGE ORDER

II. ADJUSTMENTS IN AMOUNT OF CONTRACT:

Amount of Original Contract Price	$
Net (addition) (reduction) due to previous Change Orders Nos. ____ to ____	$
Amount of Contract Price, not including this Change Order	$
Change (addition) (reduction) to Contract Price due to this Change Order	$
Amount of Contract Price including this Change Order	$

III. FINDINGS.

Pursuant to the requirements of Section 33E-9 of the Illinois Criminal Code of 1961, the undersigned do hereby find that the Change Order: [check all that are appropriate]

___ is necessary due to circumstances that were not foreseeable at the time the Owner entered into the Contract;

___ is germane to the Contract in its original form as signed; and/or

___ is in the best interest of the Owner and authorized by law.

IV. ACCEPTANCE.

RECOMMENDED FOR ACCEPTANCE:

By:_____ Date:_____
Project Engineer

ACCEPTED: By my authorized signature below, I certify on behalf of Contractor that this Change Order does not authorize or necessitate an increase in the price of any Subcontract under the Contract that is 50% or more of the original Subcontract price.

By:_____ Date: _____
Contractor

APPROVED:

WAIVER OF LIEN TO DATE

STATE OF _____)
)
COUNTY OF _____)

TO WHOM IT MAY CONCERN:

WHEREAS, the undersigned has been employed by _____ to furnish _____ _____ for the premises known as _____ _____ of which the Village of Northbrook is the Owner.

The undersigned, for and in consideration of _____ ($_____) Dollars, and other good and valuable consideration, the receipt whereof is hereby acknowledged, do(es) hereby waive and release any and all lien or claim of, or right to, lien, under the statutes of the State of Illinois relating to mechanic's liens, with respect to and on said above-described premises, and the improvements thereon, and on the materials, supplies, equipment, fixtures, apparatus, machinery, or other items furnished, and on the moneys, funds, or other considerations due or to become due from the Owner, on account of labor, services, materials, supplies, equipment, fixtures, apparatus, machinery, or other items furnished to this date by the undersigned for the above-described premises. The undersigned further represent(s) and warrant(s) that the statements contained in Exhibit A, attached hereto and by this reference incorporated herein and made a part hereof, are true and correct, and that the undersigned is authorized to make this Waiver of Lien to Date.

Given under hand and seal this_____ day of _____, 20__.

Signature and Seal: _____

NOTE: All waivers must be for the full amount paid. If waiver is for a corporation, corporate name should be used, corporate seal affixed and title of officer signing waiver should be set forth; if waiver is for a partnership, the partnership name should be used, partner should sign and designate himself as partner; if waiver is for a limited liability company, the company name should be used and managing member should sign and designate himself as managing member.

AFFIDAVIT

STATE OF _____)
)
COUNTY OF _____)

TO WHOM IT MAY CONCERN:

The undersigned, being duly sworn, deposes and says that: The undersigned is the _____ of the _____ which has a Contract with _____ for the _____ work for the premises known as _____ _____ owned by the Village of Northbrook, the total amount of the Contract including extras is $_____, on which payment of $_____ has been received prior to this payment; all waivers are true, correct, and genuine and delivered unconditionally and there is no claim either legal or equitable to defeat the validity of said waivers; the following are the names of all parties who have furnished material or labor, or both, for said work and all parties having contracts or subcontracts for specific portions of said work or for material entering into the construction thereof and the amount due or to become due to each, and the items mentioned include all labor and material required to complete said work according to plans and specifications:

NAMES	WHAT FOR	CONTRACT PRICE	AMOUNT PAID	THIS PAYMENT	BALANCE DUE
TOTAL LABOR AND MATERIAL TO COMPLETE					

; and there are no other contracts for said work outstanding, and there is nothing due or to become due to any person for material, labor, or other work of any kind done or to be done upon or in connection with said work other than above-stated.

Signed this _____ day of _____, 20__.

Signature: _____

Name: _____

Title: _____

Subscribed and sworn to be before me this ___ day of _____, 20__.

_____
Notary Public

EXHIBIT A

STATE OF _____)
)
COUNTY OF _____)

TO WHOM IT MAY CONCERN:

The undersigned, being duly sworn, deposes and says that no waivers have been issued in anticipation of payment, but only to evidence payments received from

Contractor, Subcontractor or Supplier	Date	Check No.	Amount

The undersigned further deposes and says that the Village of Northbrook ("Owner") is entitled to rely on the accuracy of the statements made herein and in the Waiver of Lien to Date and Affidavit attached hereto; and that all rights to repudiate any waiver or to assert any claim against Owner are hereby waived, including, without limitation, any claim or right to repudiate any waiver based on industry custom, practice or course of dealing.

Signed this ___day of _____, 20__.

Signature: _____

Printed Name: _____

Title: _____

SUBSCRIBED AND SWORN
to before me this ____ day
of _____, 20__.

_____
Notary Public

My Commission expires: _____

#10088401_v1

FINAL WAIVER OF LIEN

STATE OF _____)
)
COUNTY OF _____)

TO WHOM IT MAY CONCERN:

WHEREAS, the undersigned has been employed by _____ to furnish _____ _____ for the premises known as _____ _____ of which the Village of Northbrook is the Owner.

The undersigned, for and in consideration of _____ ($_____) Dollars, and other good and valuable consideration, the receipt whereof is hereby acknowledged, do(es) hereby waive and release any and all lien or claim of, or right to, lien, under the statutes of the State of Illinois relating to mechanic's liens, with respect to and on said above-described premises, and the improvements thereon, and on the materials, supplies, equipment, fixtures, apparatus, machinery, or other items furnished, and on the moneys, funds, or other considerations due or to become due from the Owner, on account of labor, services, materials, supplies, equipment, fixtures, apparatus, machinery, or other items heretofore furnished, or which may be furnished at any time hereafter, by the undersigned for the above-described premises. The undersigned further represent(s) and warrant(s) that the statements contained in Exhibit A, attached hereto and by this reference incorporated herein and made a part hereof, are true and correct, and that the undersigned is authorized to make this Final Waiver of Lien.

Given under hand and seal this_____ day of _____, 20__.

Signature and Seal: _____

NOTE: All waivers must be for the full amount paid. If waiver is for a corporation, corporate name should be used, corporate seal affixed and title of officer signing waiver should be set forth; if waiver is for a partnership, the partnership name should be used, partner should sign and designate himself as partner; if waiver is for a limited liability company, the company name should be used and managing member should sign and designate himself as managing member.

AFFIDAVIT

STATE OF _____)
)
COUNTY OF _____)

TO WHOM IT MAY CONCERN:

The undersigned, being duly sworn, deposes and says that: The undersigned is the _____ of the _____ which has a Contract with _____ for the _____ work for the premises known as _____ _____ owned by the Village of Northbrook, the total amount of the Contract including extras is $_____, on which payment of $_____ has been received prior to this payment; all waivers are true, correct, and genuine and delivered unconditionally and there is no claim either legal or equitable to defeat the validity of said waivers; the following are the names of all parties who have furnished material or labor, or both, for said work and all parties having contracts or subcontracts for specific portions of said work or for material entering into the construction thereof and the amount due or to become due to each, and the items mentioned include all labor and material required to complete said work according to plans and specifications:

NAMES	WHAT FOR	CONTRACT PRICE	AMOUNT PAID	THIS PAYMENT	BALANCE DUE
TOTAL LABOR AND MATERIAL TO COMPLETE					

; and there are no other contracts for said work outstanding, and there is nothing due or to become due to any person for material, labor, or other work of any kind done or to be done upon or in connection with said work other than above-stated.

Signed this ____ day of _____, 20__.

Signature: _____

Name: _____

Title: _____

Subscribed and sworn to be before me this ___ day of _____, 20__.

_____
Notary Public

EXHIBIT A

STATE OF _____)
)
COUNTY OF _____)

TO WHOM IT MAY CONCERN:

The undersigned, being duly sworn, deposes and says that no waivers have been issued in anticipation of payment, but only to evidence payments received, including without limitation the final payment, and any partial payments(s) not previously identified in a Waiver of Lien to Date; that the Village of Northbrook ("Owner") is entitled to rely on the accuracy of the statements made herein and in the Final Waiver of Lien and Affidavit attached hereto; and that all rights to repudiate any waiver or to assert any claim against Owner are hereby waived, including, without limitation, any claim or right to repudiate any waiver based on industry custom, practice or course of dealing.

Signed this ___day of _____, 20__.

Signature: _____

Printed Name: _____

Title: _____

SUBSCRIBED AND SWORN
to before me this ____ day
of _____, 20__.

_____
Notary Public

My Commission expires: _____

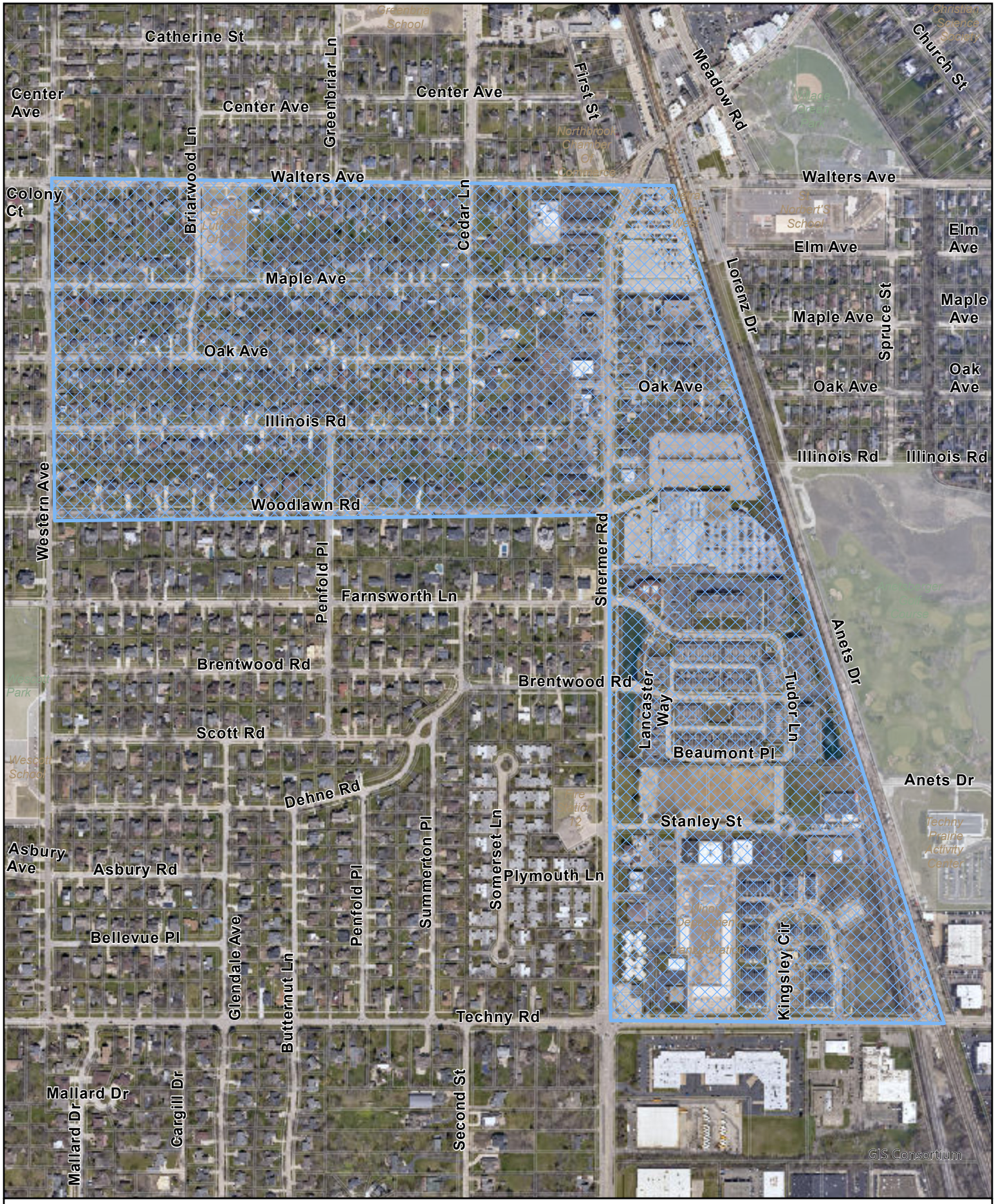

Capital Improvement Projects

Neighborhood Sidewalk Improvements

FY 25/26

N

0 255 510 1,020

Feet

GIS Consortium

7/11/2024



Capital Improvement Projects

Arterial Sidewalk

FY 25/26

N

0 437.5 875 1,750

Feet

GIS Consortium

7/11/2024

MEMORANDUM

To: Village Manager Cara Pavlicek
From: Director Public Works Kelly Hamill
Date: 2025-08-12
Subject: A Resolution Authorizing an Agreement for Water System Leak Detection Services with ADS Environmental Services of Chicago, Illinois

Overview
A Village contracts for a survey of the water system to proactively locate leaks that have not yet been identified. The Village makes the necessary repairs on a scheduled basis before they escalate into larger leaks or water main breaks.

Fiscal Impact
The Request for Proposals (RFP) for Water System Leak Detection Services sought pricing for an initial term of three (3) years with an option to renewal for two (2) additional one-year terms. ADS Environmental Services of Chicago, Illinois was selected as the most responsive and responsible proposal based on staff's evaluation of total cost, comparable municipal experience, and positive professional references.

Staff recommends entering into a three-year contract for water system leak detection services with ADS Environmental Services in the amount of $114,920. The adopted Fiscal Year 2025/26 Budget contains funds for planned water system survey work and emergency leak detection services. The adopted Fiscal Year 2025/26 Budget contains sufficient funds for the planned Village Wide Leak Detection services in Water Fund Account 21-4180-554-00 (Other Professional Services) and Emergency Leak Locating services in Water Fund Account No. 21-4180-529-00 (Maintenance - Water Lines/Meters) on an as-needed bases to be completed at the rates outlined in Exhibit A.

Account	Account No.	Budget	Available	Requested	Remaining	Within Budget
Maintenance - Water Lines/Meters	21-4180-529-00	$187,000	$141,942	$15,000	$126,942	Yes
Other Professional Services	21-4180-554-00	$489,795	$375,323	$37,180	$338,143	Yes

Recommendation
Approval.

Background
On May 13, 2025, staff prepared a RFP for water system leak detection services ("Services") and sent it to six (6) contractors specializing in this type of work. On June 3, 2025, staff received four (4) proposals. Upon initial review, staff determined that the lowest-cost proposal was submitted by Scott Enterprises. However, the contractor does not have a local office which would pose logistical challenges in responding promptly to emergency leak detection needs. Therefore, Scott Enterprises did not satisfy all the requirements for a contract award and staff does not recommend awarding to this vendor. Based on responsiveness, professional qualifications, and the ability to meet service expectations, staff recommends awarding the contract to ADS Environmental Services of Chicago, Illinois (“Contractor”), which submitted the most responsive and responsible proposal. A summary of the proposals is included in Table 1.

Table 1. Summary of Water System Leak Detection Services

Firm	Year 1 Cost	Year 2 Cost	Year 3 Cost	Total 3-Year Cost
Scott Enterprises	$33,000	$33,000	$35,000	$101,000
ADS Environmental Services	$37,180	$38,295	$39,445	$114,920
Gewalt Hamilton Associates, Inc.	$56,980	$59,400	$61,820	$178,200
ME Simpson	$62,700	$64,900	$64,900	$192,500

Staff recommends entering into a three-year agreement with the Contractor for annual leak detection survey services in the amount of $114,920. The initial term of the agreement will be from August 12, 2025 through December 31, 2027. The agreement includes the option for up to two (2) additional one-year renewal terms upon mutual consent with cost adjustments that are limited to the lesser of the annual average percentage increase in the Chicago CPI for the previous 12-month period, or three (3) percent. The Village will utilize the the services of the Contractor for emergency leak locating on an as needed basis at the rates identified in Exhibit A of this resolution.

As required by the Illinois Environmental Protection Agency, the Public Works Department takes steps to minimize loss within the Village's water system. These steps include leak detection, repairing water main breaks as they occur, and metering water usage in the distribution system. Traditionally, leak detection is done through a leak locating service that "listens" for leaks along a specific segment of main after a leak has been identified in order to pinpoint the location and minimize the amount of excavation required. A planned Village-wide leak detection survey is conducted on an annual basis in order to proactively locate leaks that have not yet been identified and repair them.

Staff will be in attendance at the Village Board meeting for any questions that may arise.

A Resolution Authorizing an Agreement for Water System Leak Detection Services with ADS Environmental
Exhibit A - Agreement for Water System Leak Detection Services with ADS Environmental

Resolution 2025- _____

BE IT RESOLVED by the President and Board of Trustees of the Village of Northbrook, County of Cook and State of Illinois, THAT:

A Resolution Authorizing the Execution of an Agreement for Water System Leak Detection Services with ADS Environmental Services of Chicago, Illinois

is hereby adopted, as follows:

Section 1. Recitals.

The Village regularly contracts for water leak detection services in order to locate water leaks in the Village's water system infrastructure and make necessary repairs ("***Services***"). These services allow the Village to meet the requirements of the Illinois Environmental Protection Agency to minimize water loss in the Village's distribution system. The Village's Fiscal Year 2025/26 Final Budget provides for the Services.

In May 2025, staff developed a Request for Proposals (RFP) for the Services and was released on May 13, 2025. The RFP was sent to six (6) contractors that specialize in this type of work and the RFP was posted on the Village's website. On June 3, 2025, the Village received a total of four (4) proposals. After reviewing the proposals, staff determined ADS Environmental Services of Chicago, Illinois ("***Contractor***") submitted the most responsive and responsible proposal based on their responsiveness, professional qualifications, and the ability to meet service expectations.

Based on these factors, staff recommends approval of a three (3) year initial term contract for the period of August 12, 2025 through December 31, 2027 ("***Agreement***") between the Village and the Contractor for the Services in the amount of $114,920. The Agreement includes the option for up to two (2) additional one-year renewal terms upon mutual consent with cost adjustments that are limited to the lesser of the annual average percentage increase in the Chicago CPI for the previous 12-month period, or three (3) percent.

The adopted Fiscal Year 2025/26 Budget contains funds for planned water system survey work and emergency leak detection services. The adopted Fiscal Year 2025/26 Budget contains sufficient funds for the planned Village Wide Leak Detection services in Water Fund Account 21-4180-554-00 (Other Professional Services) and Emergency Leak Locating services in Water Fund Account No. 21-4180-529-00 (Maintenance - Water Lines/Meters) on an as-needed bases to be completed at the rates outlined in ***Exhibit A***.

The President and the Board of Trustees have considered the Agreement and determined that it is in the best interests of the Village and the public to enter into the Agreement with the Contractor.

Section 2. Approval of Agreement.

The Agreement shall be, and is hereby, approved in a form acceptable to the Village Attorney and the Village Manager.

Section 3. Authorization to Execute Agreement.

The Village Manager and Village Clerk shall be, and are hereby, authorized and directed to execute and seal, on behalf of the Village, the Renewal only after receipt by the Village Clerk of at least three original copies of the Agreement executed by the Contractor; provided, however, that if such executed copies of the Renewal are not received by the Village Clerk within 30 days after the date of adoption of this Resolution, then this authority to execute and seal shall, at the option of the President and the Board of Trustees, be null and void.

Section 4. Authorization of Expenditures.

The Village Manager is hereby authorized and directed to execute such documents and make such payments as are necessary to complete the procurement of Water System Leak Detection Services and as-needed emergency leak detection services from the Contractor at the prices outlined in ***Exhibit A***.

Approved:

RESULT:
MOVER:
SECONDER:
AYES:
NAYES:
ABSTAIN:
ABSENT:

ATTEST:

_____
Village President

_____
Village Clerk

VILLAGE OF NORTHBROOK

REQUEST FOR BIDS
WATER SYSTEM LEAK DETECTION SERVICES

OWNER:
Village of Northbrook
655 Huehl Road
Northbrook, Illinois 60062

BID SUBMISSION INFORMATION:

Date of RFB Issuance:
Tuesday, May 13, 2025 – 10:00 a.m.

Bid Submittal Deadline:
Tuesday, June 3, 2025 – 10:00 a.m.

The owner will receive sealed bids for the Work generally described as follows:

Annual system-wide leak detection surveys as well as emergency leak detection services.

TO BE SUBMITTED TO: **Northbrook Public Works, 655 Huehl Road, Northbrook, Illinois 60062, Attention: Jean Paul Soens before 10:00 a.m. on June 3, 2025.**

INSTRUCTIONS TO BIDDERS

Preparation of Bids

A Contractor submitting a Bid for the Services must (i) do so on the blank Contract/Proposal form attached to this Request for Bids, (ii) attach a full listing of prices and rates as directed in the Attachment B, and (iii) cause the Bid to be signed by an authorized official.

All bids for the Work shall be made only on the blank Contract/Proposal form attached to this Request for Bids and shall be complete with a price for each and every item named in Attachment A, Schedule of Prices section of the Contract/Proposal form. All bids must be signed by an authorized official. Bids that contain omissions, erasures, alterations, or additions not called for, conditional or alternate bids unless called for, or that contain irregularities of any kind may be rejected. Bids must include the attached reference form with their submittal. Each bidder is encouraged to visit the worksites prior to submitting a bid.

Clarifications

Owner reserves the right to make clarifications, corrections, or changes in this Request for Bids at any time prior to the time bids are opened. All bidders or prospective bidders will be informed of said clarifications, corrections, or changes. Any questions regarding the Owner's intent can be directed to Jean Paul Soens, Management Analyst at jeanpaul.soens@northbrook.il.us or at (847) 664-4128.

Delivery of Bids

Each bid shall be submitted in a sealed envelope plainly marked with the title of the contract and bidder’s full legal name and shall be addressed and delivered to the place and before the time set

forth above. Bids may be delivered by mail or in person. Bids received after the time specified above will be returned unopened.

Pre-Submission Questions

Questions and inquiries regarding this RFB are **due Wednesday, May 21 at 10 a.m.** An addendum addressing all questions and inquiries will be issued and posted to the Village of Northbrook's website (https://www.northbrook.il.us/1019/Bids-and-Proposals) by **Tuesday, May 27 at 3 p.m.**

Delivery of Bids

Each bid shall be submitted in a sealed envelope plainly marked with the title of the agreement and bidder's full legal name and shall be addressed and delivered to the place and before the time set forth above. Bids may be delivered by mail or in person. Bids received after the time specified above will be returned unopened.

Opening of Bids

Bids will be publicly opened and read at the time and place specified for the submission deadline. Bidders, their authorized agents, and interested parties are invited to be present.

Withdrawal of Bids

No bid shall be withdrawn for a period of 45 days after the opening of any bid.

Rejection of Bids

Bids that are not submitted on the Contract/Proposal form or that are not prepared in accordance with these Instructions to Bidders may be rejected. If not rejected, Owners may demand correction of any deficiency and accept the deficiently prepared bid upon compliance with these Instructions to Bidders.

Bidder Qualifications and Evaluation Criteria

The Bidders must be qualified contractors and demonstrate the capability to provide services required in accordance with the bid specifications. This would include:

- Bid Pricing
- Emergency Response Rate and Minimum Call Out Time
- Compliance with Specifications
- Previous Municipality Experience
- Submittal Compliance
- References

Acceptance of Bids

Bids submitted are offers only and the decision to accept or reject is a function of quality, reliability, capability, reputation, and expertise of the bidders.

Owner reserves the right to accept the bid that is, in its judgment, the best and most favorable to the interests of the Owner and to the public; to reject the low price bid; to accept any item of any bid; to reject any and all bids; and to waive irregularities and informalities in any bid submitted or in the request for bids process; provided, however, the waiver of any prior defect or informality shall not be considered a waiver of any future or similar defect or informality. Bidders should not rely upon, or anticipate, such waivers in submitting their bid.

Upon acceptance of the successful Bidder's bid by Owner, the successful Bidder's bid, together with Owner's notification of acceptance in the form attached to this Request for Bids, shall become the agreement for the Work.

DATED this 13th day of May, 2025.

VILLAGE OF NORTHBROOK

By: Jean Paul Soens
Management Analyst

VILLAGE OF NORTHBROOK
CONTRACT/PROPOSAL FOR
WATER SYSTEM LEAK DETECTION SERVICES

Full Name of Bidder: ADS LLC ("Bidder")

Principal Office Address: 340 The Bridge Street, Suite 204 Huntsville AL35806

Local Office Address: _____

Contact Person: Tony Yang E-Mail: xyang1@idexcorp.com

Telephone: 205-645-7301 Fax: _____

TO: Northbrook Public Works Department
655 Huehl Road
Northbrook, IL 60062
Attention: Joseph Rizzo, Superintendent

1. Proposal to Deliver Services

A. Contract and Services. If this Contract/Proposal is accepted by Village, Bidder proposes and agrees that it shall:

(1) provide, perform, and complete, in the manner specified and described in the Contract/Proposal, including Attachment A, all necessary work, services, transportation, equipment, materials, information, utilities and other means and items necessary to accomplish the work, all in a proper and workmanlike manner (the "Services");

(2) procure and furnish all permits, licenses, and other governmental approvals and authorizations necessary for the Services;

(3) perform all other duties required of Contractor by this Contract/Proposal.

B. Performance Standards. If this Contract/Proposal is accepted, Contractor proposes and agrees that the Services shall strictly comply with the specifications included in Attachment A and by this reference made a part of this Contract/Proposal (the "Specifications").

If this Contract/Proposal specifies a product by brand name or model, such specification is intended to reflect the required performance standards and standard of excellence that the Owner requires for the product. However, Contractor may propose to deliver a product that is a different brand or model, if Contractor provides with its Proposal written documentation establishing that the brand or model it proposes to deliver possesses equal quality, durability, functionality, capability, and features as the product specified.

C. Responsibility for Damage or Loss. If this Contract/Proposal is accepted, Contractor proposes and agrees that Contractor shall be responsible and liable for, and shall promptly and without charge to Village, repair or replace damage done to and any loss or injury suffered by Village as a result of Contractor's failure to perform hereunder.

2. Contract Price Proposals

A. Pricing Proposals

Complete the schedule of pricing included in Attachment B. The submitted prices, which constitute full payment for all Services and other matters set forth under Section 1 of this Contact/Proposal, shall include all overhead and profit, taxes, royalties, license fees, delivery, contributions and premiums, and compensation to all subcontractors and suppliers.

B. Basis for Determining Price. It is expressly understood and agreed that:

(1) All prices listed in Attachment B are fixed for the three (3) year initial term and shall not be subject to escalation or change during the initial term of this Agreement. In the event this agreement is extended in accordance with Section 3 (Contract Term) for the 4th and 5th year, the Contractor may raise the price for services to be performed under the extended agreement by giving written notice to the Owner by providing a revised Attachment B - Schedule of Prices. The allowable escalation of the agreement shall be limited to the lesser of (i) the annual average percentage increase in the Chicago Consumer Price Index (CPI) for All Urban Consumers, as published by the Bureau of Labor Statistics (available at 312-353-1880 or www.bls.gov) for the previous 12-month period, or (ii) three percent (3%). Only one increase shall be allowed in any agreement extension period. The Village may elect to rebid the service in the event of such notice but shall be obligated to rebid if a notice of price increase exceeds the CPI for the Chicago Metropolitan area.

(2) Owner is not subject to state or local sales, use and excise taxes; that no such taxes are included in this Section; and that all claim or right to claim any additional compensation by reason of the payment of any such tax is hereby waived and released;

(3) All other applicable federal, state and local taxes of every kind and nature applicable to the Services are included in the prices listed in Attachment B;

(4) If Village has stated that a certain amount of work will be required for the Services or that a certain amount of unit price items are needed, (a) such statement is an estimate only, (b) Village may increase or decrease such quantity, (c) the total Contract Price to be paid shall be based upon the final quantity determined by Village and the actual quantity that complies with this Contract/Proposal and that are accepted by Village, and (d) any claim or dispute, based on such estimate, regarding the quantity of the Services to be provided is waived and released by Contractor.

C. Time of Payment. Contractor may invoice the Owner on a monthly basis. All payments will be made by Owner to Contractor within 45 days after receipt and approval of an invoice.

3. Contract Term

The initial term of this agreement shall commence on or about August 12, 2025 and shall expire December 31, 2027. For purposes of contract administration and pricing, the initial term shall be as follows:

- Contract Year 1: on or about August 12, 2025 through December 31, 2025
- Contract Year 2: January 1, 2026, through December 31, 2026
- Contract Year 3: January 1, 2027, through December 31, 2027

Owner reserves the right, but shall be under no obligation, to offer to renew the term of the agreement by one (1) year periods for a maximum of two (2) additional years. If approved and accepted in writing by both the Contractor and the Owner. Funding for all subsequent renewals after the initial year is subject to annual budget review and approval by the Northbrook Board of Trustees.

Owner shall notify Contractor of its desire to renew the agreement on or about March 1st of the current maintenance year. Contractor shall reply to the Village no later than March 15th whether or not it will enter into a renewal of the agreement.

4. Financial Assurance

A. Indemnification. If this Contract/Proposal is accepted, Contractor proposes, and agrees, that Contractor shall indemnify, save harmless, and defend Owner against all third party claims, damages, liability, losses, and expenses (including attorneys' fees) that may arise, or be alleged to have arisen, to the extent caused by the negligence or willful misconduct of Contractor out of or in connection with Contractor's performance of, or failure to perform, the Work or any part thereof, or any failure to meet the representations and warranties set forth in Section 7 of this Contract.

B. Penalties. If this Contract/Proposal is accepted, Contractor proposes and agrees that Contractor shall be solely liable for any fines or civil penalties that are imposed by any governmental or quasi-governmental agency or body that may arise or be alleged to have arisen out of or in connection with Contractor's performance of or failure to perform hereunder.

C. Insurance. Contemporaneous with the Contractor's execution of this Contract/Proposal, the Contractor shall provide certificates and policies of insurance, all with coverages and limits acceptable to the Owner, and evidencing at least the minimum insurance coverages and limits as set forth in Attachment C to this Contract/Proposal. For good cause shown, the Village Manager may extend the time for submission of the required policies of insurance upon such terms, and with such assurances of complete and prompt performance, as the Village Manager may impose in the exercise of their sole discretion. Such insurance policies shall provide that no change, modification in, or cancellation of, any insurance shall become effective until the expiration of 30 days after written notice thereof shall have been given by the insurance company to the Village. The Contractor shall, at all times during the term of this Contract/Proposal, maintain and keep in force, at the Contractor's expense, the insurance coverages provided above.

5. Firm Proposal

All prices and other terms stated in this Contract/Proposal are firm and shall not be subject to withdrawal, escalation or change provided Owner accepts this Contract/Proposal within forty-five (45) days after this sealed Contract/Proposal is opened.

6. Agreement Termination

Notwithstanding any other rights of cancellation contained herein, the Owner reserves the sole right to cancel this agreement, with or without cause, by serving notice to the Contractor, by certified mail, return receipt requested, of such intent to cancel this entire agreement no less than sixty (60) days prior to any such proposed cancellation date. Such cancellation to be without recourse, except for any sums owed to either party at the time of cancellation. The Contractor acknowledges that all work performed under this agreement is contingent upon the Village Board's approval of the funding for the work. The Contractor shall continue to perform all agreed upon work until the date of cancellation of the agreement.

7. Contractor's Representations and Warranties. In order to induce Village to accept this Contract/Proposal, Contractor hereby represents and warrants as follows:

A. The Services. The Services and all of their components shall strictly conform to the requirements of this agreement, including, without limitation, the Specifications listed in Attachment A and the performance standards set forth in Subsection 1B (Performance Standards) of this agreement; and shall meet or exceed industry standards for quality and reliability.

B. Compliance with Laws. Contractor shall ensure that the Services and all of its components shall comply with, and Contractor agrees to be bound by, all applicable federal, state and local laws, orders, rules and regulations as they may be modified or amended from time to time. Every provision required by law to be inserted into this Contract/Proposal shall be deemed to be inserted herein.

C. Not Barred. Contractor is not barred by law from contracting with Village or with any other unit of state or local government as a result of (i) a delinquency in the payment of any tax administered by the Illinois Department of Revenue unless Contractor is contesting, in accordance with the procedures established by the appropriate revenue act, its liability for the tax or the amount of the tax as set forth in 65 ILCS 5/11-42.1-1; (ii) a violation of either Section 33E-3 or Section 33E-4 of Article 33 of the Criminal Code of 1961, 720 ILCS 5/33E-1 et seq; or (iii) for any other reason.

D. Qualified. Contractor has the requisite experience, ability, inventory, capital, facilities, equipment, plant, organization, and staff to enable Contractor to deliver the Services at the Contract Price and within the Contract Time Proposal set forth above.

8. Acknowledgments. In submitting this Contract/Proposal, Contractor acknowledges and agrees that:

A. Reliance. Owner is relying on all warranties, representations, and statements made by Contractor in this Contract/Proposal.

B. Reservation of Rights. Owner reserves the right to reject any and all bids, reserves the right to reject the low price bid, and reserves such other rights as are set forth in the Instructions to Bidders.

C. Acceptance. If this Contract/Proposal is accepted, Contractor shall be bound by each and every term, condition or provision contained in this Contract/Proposal and in Village's written notification of acceptance in the form included in this bound set of documents.

D. Remedies. Each of the rights and remedies reserved to Owner in this Contract/Proposal shall be cumulative and additional to any other or further remedies provided in law or equity or in this Contract/Proposal.

E. Time. Time is of the essence of this Contract/Proposal and, except where stated otherwise, references in this Contract/Proposal to days shall be construed to refer to calendar days.

F. No Waiver. No examination, inspection, investigation, test, measurement, review, determination, decision, certificate or approval by Owner, whether before or after Owner's acceptance of this Contract/Proposal; nor any information or data supplied by Owner, whether before or after Owner's acceptance of this Contract/Proposal; nor any order by Owner for the payment of

money; nor any payment for or use, possession or acceptance of the whole or any part of any Product; nor any extension of time granted by Owner; nor any delay by Owner in exercising any right under this Contract/Proposal; nor any other act or omission of Owner shall constitute or be deemed to be an acceptance of any defective, damaged or nonconforming Product; nor operate to waive or otherwise diminish the effect of any representation or warranty made by Contractor or of any requirement or provision of this Contract/Proposal or of any remedy, power, or right of Owner.

G. Severability. The provisions of this Contract/Proposal shall be interpreted when possible to sustain their legality and enforceability as a whole. In the event any provision of this Contract/Proposal shall be held invalid, illegal or unenforceable by a court of competent jurisdiction, in whole or in part, neither the validity of the remaining part of such provision, nor the validity of any other provisions of this Contract/Proposal shall be in any way affected thereby.

H. Amendments. No modification, addition, deletion, revision, alteration or other change to this Contract/Proposal shall be effective unless and until such change is reduced in writing and executed and delivered by Owner and Contractor.

I. Assignment. Neither this Contract/Proposal, nor any interest herein, shall be assigned or subcontract in whole or in part by Contractor, except upon the prior written consent of Owner.

J. Governing Law. This Contract/Proposal and the rights of the parties under this Contract/Proposal shall be interpreted according to the internal laws, but not the conflict of law rules of the State of Illinois.

DATED this 1st day of July, 2025.

Bidder's Status: ( )____Corporation (State) ( )____Partnership (State) ( ) Individual Proprietor (X) LLC

Bidders's Name: ADS LLC

Doing Business As (if different): _____

Signature of Bidder or Authorized Agent: Tony Yang (Jul 2, 2025 09:56 CDT)

(CORPORATE SEAL, IF APPLICABLE)

Printed Name: Tony Yang

Title/Position: Director of Finance

Bidder's Business Address: 340 The Bridge Street, Suite 204 Huntsville AL 35806

Bidder's Business:

Telephone: 205-645-7301

Facsimile: _____

E-Mail: xyang1@idexcorp.com

If a Corporation or Partnership, list all Officers or Partners:

NAME	TITLE	ADDRESS
IDEX Corporation		

If it is the Bidder's intention to utilize a subcontractor(s) to fulfill the requirements of this contract, the Village must be advised of the subcontractor's company name, address, telephone and fax numbers, and a contact person's name at the time of bid submittal.

Will you be utilizing a subcontractor? ☐ YES ☒ NO

If yes, have you included all required information with your bid submittal? ☐ YES ☒ NO

ACCEPTANCE

The Contract/Proposal attached hereto and by this reference incorporated herein and made a part hereof is hereby accepted by the Village of Northbrook ("Owner") this _____ day of _____, 2025.

This Acceptance, together with the Contract/Proposal attached hereto, constitutes the entire and only agreement between the parties relating to the Services and the Contract Price therefor and supersedes and merges any other prior or contemporaneous discussions, agreements or understandings, whether written or oral, and shall prevail over any contradictory or inconsistent terms or conditions contained in any purchase order, acceptance, acknowledgment, invoice or other standard form used by the parties in the performance of the Contract/Proposal. Any such contradictory or inconsistent terms or conditions shall be deemed objected to by Village without further notice of objection, shall be of no effect, and shall not be in any circumstances binding upon Village, unless accepted by Village in a written document plainly labeled, "Amendment to Contract/Proposal." Acceptance or rejection by Village of any such contradictory or inconsistent terms or conditions shall not constitute acceptance of any other contradictory or inconsistent terms or conditions.

(SEAL)

Attest/Witness: **VILLAGE OF NORTHBROOK**

By: _____ By: _____

Derek Gau Cara Pavlicek

Title: Village Clerk Title: Village Manager

ATTACHMENT A

SPECIFICATIONS

1. GENERAL

The Village of Northbrook water distribution system consists of 12,500 service connections and over 220 miles of water main ranging in size from 4" to 42" pipe. There are over 2,751 hydrants and over 2,145 valves throughout the system. The average pumpage is 9 MGD and all water is supplied from Lake Michigan.

2. SCOPE OF SERVICES

Full system leak detection survey each year of contract agreement and as needed emergency water system leak detection services. Leak detection surveys following initial term are dependent upon agreed upon renewal(s) by Owner and Contractor.

All work and material not otherwise described shall be of the best quality, and should any workmanship or materials be needed which are not directly or indirectly set forth in his proposal, but which are nevertheless necessary to the proper execution according to the obvious intent, the Contractor will understand same to be implied and shall provide for it in their proposal.

3. PROJECT DELIVERABLES

The Contractor shall provide the following identified deliverables below in accordance with the following schedule:

- **Contract Year 1** – all project deliverables shall be submitted to the Owner no later than thirty (30) calendar days following the completion of services or by December 31, 2025, whichever occurs first.
- **Contract Years 2 and 3** – all project deliverables shall be submitted to the Owner no later than thirty (30) calendar days following the completion of services or by November 1 of the applicable contract year, whichever occurs first.
- **Subsequent Renewal Periods** – all project deliverables shall be submitted to the Owner no later than thirty (30) calendar days following the completion of services or by November 1 of the applicable renewal year, whichever occurs first.

3.1 Records of Findings

The Contractor shall develop and maintain detection survey field notes. These records shall record the type of monitored appurtenances, their location and any mechanical deficiencies discovered during the survey, i.e. broken or leaking valves, hydrants or buffalo boxes. Any mapping discrepancies found shall also be recorded. The records shall be submitted with the final report and shall be suitable for presentation to the Village Board of Trustees for their review.

3.2 Leak Detection Documentation

As each leak is identified, its location shall be marked in the field. The contractor shall submit a written "Leak Location Form" on the day a leak was pin-identified. The "Leak Location Form" shall include a descriptive map of each leak location and an estimated amount of water leakage. Other information contained within this document will include correlation filters, line locations, and distances between sensors. The contractor will submit this document to the Owner weekly or upon demand.

3.3 Final Report

At the conclusion of each survey, the Contractor shall prepare and submit one (1) hardcopy and one (1) electronic copy of a comprehensive detailed report. This summary report shall include, but is not limited

to: areas surveyed, number and type of leaks found, estimates of leakage, map discrepancies, and any valve, hydrant or buffalo box repairs.

3.4 Quality Control

The Superintendent will meet with the Contractor on an agreed-upon daily, weekly, bi-monthly, monthly, or quarterly basis, to discuss findings, reports, and/or issues/concerns. The Contractor shall be made responsible to schedule the agreed upon daily, weekly, bi-monthly, monthly, or quarterly meetings. The Owner shall provide written notice, via e-mail, to the Contractor indicating requests, issues, and/or other discrepancies. The Contractor will notify the Superintendent via e-mail when the request(s) and/or issue(s) have been resolved.

4. MATERIALS AND SERVICES TO BE PROVIDED BY OWNER

The Owner will supply the awarded Contractor with one 11” x 17” copy of the most current water distribution maps and necessary records to conduct the leak detection survey. PDFs and access with appropriate GIS layers will also be available, if requested.

5. TECHNICAL SPECIFICATIONS

It is the intent of these specifications for the Contractor to provide a high level of service under this agreement:

A. The leak detection survey shall consist of, but is not limited to, listening to accessible mainline water distribution valves, hydrants, and when necessary, buffalo boxes with electronic listening equipment. Any listening points that are not accessible will be reported to the utility and then listened to upon correction. All leak detection shall be completed no later than December 31 of each year.

B. Listening points of the contract include valves, hydrants, service valves, or meter settings. The listening points' preference is as follows: direct contact with the pipe, mainline valves, hydrant valves, hydrants, then service valves or meter settings.

C. When the Contractor identifies a significant water leak, the Contractor shall mark the parkway or street with a mutually agreed upon color of spray paint. If the leak is suspected to be in a residential driveway, the Contractor shall not mark with spray paint. The Contractor shall notify the Superintendent when a significant leak is found. The contractor will notify the Owner of any leaks requiring immediate attention (i.e., threat to life, injury, or traffic).

D. Specific listening distances will be determined by pipe material.
   i. Metallic Type: No greater than 500' between listening points
   ii. Non-Metallic AC/Concrete Type: No greater than 300' between listening points
   iii. Non-Metallic PVC/HDPE Type: No greater than 150' between listening points.

   The Echologics Leak Finder-ST with headphones leak detector or Fluid Conservation Systems (FCS) TriCorr Touch leak correlator or comparable to FCS TriCorr will be used for correlations because of these correlators' ability to be able to analyze the particular sound frequencies inherent to PVC pipe.

6. EMERGENCY SERVICES

The Contractor shall be called upon from time to time to respond after business hours (3:30 p.m. through 7 a.m.) or during regular business hours (7 a.m. and 3:30 p.m.) when not performing work in the Village to assist crews with locating possible main breaks. Under these circumstances the Contractor shall be compensated only at an hourly rate per crew that shall be inclusive of all labor, materials, travel, and equipment as identified herein. Only the cost for after business hours emergency responses will include travel time to the site.

The awarded contractor shall provide a 24-hour emergency telephone number to contact a representative in case of emergency. For any/all emergency services that are needed, the Owner requests that the Contractor provide hourly rates in Attachment B.

The Municipalities reserve the right to terminate the Agreement for violations to the Emergency Services response time as identified herein.

7. SCHEDULING OF WORK

The Contractor will schedule survey services with the Superintendent at needed. The Contractor shall have sufficient equipment and personnel to work and to complete the leak detection survey by the deliverable deadlines outlined in Attachment A Section 3.

8. CONTRACTOR'S PERSONNEL

the Contractor shall be responsible for ensuring that all personnel are properly identified to minimize customer concerns regarding the presence of unusual utility workers in the parkways, alleys, and lot lines. Specifically, Contractors shall display a picture identification badges with the Contractor's business name and/or logo on it or a standard uniform with the Contractor's and employees affixed.

9. CONTRACTOR'S EQUIPMENT

The Owner may provide the Contractor space at their Public Works facility to store equipment while working in the Village. In exchange for storage space, the Contractor shall identify the discount to the Village if space is provided. Access to facilities shall be established with the successful Bidder.

ATTACHMENT B

SCHEDULE OF PRICES

After becoming familiar with the general conditions, special conditions, specifications and addenda attached hereto, the undersigned offers the following prices including all supervision, labor, materials and equipment for providing water system leak detection services.

WATER SYSTEM LEAK DETECTION & SURVEY SERVICES PRICING TABLES

Item No.	Year	Annual Price
1	Year 1 – July 8, 2025 to December 31, 2025	$ 37,180
2	Year 2 – January 1, 2026 - December 31, 2026	$ 38,295
3	Year 3 – January 1, 2027 to December 31, 2027	$ 39,445

TOTAL 3-YEAR PROGRAM CONTRACT COST $ 114,920

Emergency Response Rate

Item No.	Items	Unit	Rate
1	Regular Hours - No Minimums	Per Hour	$300.00
2	After Hours - Minimum Two (2) Hours	Two-Hour Callout	$ 400.00
3	After Hours - Hourly Cost after Two (2) Hour Minimum	Per Hour	$300.00

ANNUAL DISCOUNT IF ALLOWED TO STORE AT VILLAGE FACILITY
(IF THE CONTRACT WILL UTILIZE SPACE AT VILLAGE FACILITY TO STORE EQUIPMENT OVERNIGHT) N/A %

Any and all exceptions to these specifications MUST be clearly and completely indicated on the bid sheet. Attach additional pages if necessary. **NOTE TO BIDDERS:** Please be advised that any exceptions to these specifications may cause your bid to be disqualified. Submit bids by SEALED BID ONLY. Fax and e-mail bids are not acceptable and will not be considered.

THE SECTION BELOW MUST BE COMPLETED IN FULL AND SIGNED

The undersigned hereby certifies that they have read and understand the contents of this solicitation and agree to furnish at the prices shown any or all of the items above, subject to all instructions, conditions, specifications and attachments hereto. Failure to have read all the provisions of this solicitation shall not be cause to alter any resulting contract or to accept any request for additional compensation. By signing this bid document, the bidder hereby certifies that they are not barred from bidding on this contract as a result of a violation of either Section 33E-3 or 33E-4 of the Illinois Criminal Code of 1961, as amended.

Authorized Signature: _____ **Company Name:** ADS LLC

Typed/Printed Name: Ramona Bolden Fether **Date:** 5/30/2025

Title: Assistant Secretary **Telephone Number:** 256-430-3366

E-mail rfether@idexcorp.com

ATTACHMENT C

SUPPLEMENTAL INFORMATION

1. Miles of distribution pipeline requiring leak detection: 220
2. System total mileage: 220
3. Will accurate system maps be made available? If so, what are the age of the maps? Current
4. Is your municipality on a grid system? No
5. Please list the water pipe diameter size range: 4” to 42”
6. Contact points (valves, hydrants, services) are within ___ ft: 30ft to 150ft
7. Approximately what percent of your pipes are: a. Cast iron: 55% b. Ductile iron: 41% c. Steel: d. AC: 1% e. PVC: 3% f. Other:
8. What materials are your service lines (copper, poly, galv., etc.)? Copper, ductile iron, cast iron, and lead
9. Please list your system pressure variances (PSI) range: 40 to 65 psi
10. Approximate # of service connections: 12,420
11. What % of services are metered: 100%
12. Please list your pipe depth range: 4’ to 10’
13. Please list your water source(s): Lake Michigan
14. Number of tanks/reservoirs: 2 Elevated storage tanks, 1 Reservoir
15. Do you currently use GIS: Yes
16. Do you currently use a computer maintenance management system (CityWorks, PubWorks etc.)? If so, what system do you use? No
17. Have you started an asset management program? Yes

ATTACHMENT D

INSURANCE COVERAGES

A. Worker's Compensation and Employer's Liability with limits not less than:

(1) Worker's Compensation: Statutory;

(2) Employer's Liability:

$1,000,000 injury-per occurrence

$500,000 disease-per employee

$1,000,000 disease-policy limit

Such insurance shall evidence that coverage applies in the State of Illinois.

B. Comprehensive Motor Vehicle Liability with a combined single limit of liability for bodily injury and property damage of not less than $1,000,000 for scheduled vehicles. In the event that Contractor acquires or makes use of multiple vehicles such coverage shall be expanded to owned, non-owned, or rented vehicles as may be appropriate to ensure coverage of all vehicles used by Contractor to provide services to the Village.

All employees shall be included as insureds.

C. Comprehensive General Liability with coverage written on an "occurrence" basis and with limits no less than:

$2,000,000 Bodily Injury and Property Damage Combined Single Limit

Coverage is to be written on an "occurrence" bases.

Coverages shall include:

- Broad Form Property Damage Endorsement
- Blanket Contractual Liability (must expressly cover the indemnity provisions of the Contract)

D. Umbrella Policy. The required coverages may be in any combination of primary, excess, and umbrella policies. Any excess or umbrella policy must provide excess coverage over underlying insurance on a following-form basis such that when any loss covered by the primary policy exceeds the limits under the primary policy, the excess or umbrella policy becomes effective to cover such loss.

F. Owner as Additional Insured. Owner shall be named as an Additional Insured on all policies except for:

Worker's Compensation

Each such additional Insured endorsement shall identify Owner as follows: Village of Northbrook, including its Board members and elected and appointed officials, its officers, employees, agents, attorneys, consultants, and representatives.

MEMORANDUM

To: Village Manager Cara Pavlicek
From: Director of Public Works Kelly Hamill
Date: 2025-08-12
Subject: A Resolution Waiving Competitive Bidding and Authorizing an Agreement for Cemetery Burials & Related Services with Property Werks of Northern Illinois, Inc. D/B/A Professional Cemetery Services of Dundee, Illinois

Overview
The Village currently owns three municipal cemeteries: the North Northfield Cemetery, the Northfield Union Cemetery and St. Peter Cemetery and contracts for related services.

Fiscal Impact
The adopted FY26 Budget contains sufficient funds in Cemetery Fund Account Number 20-1000-524-00 for this work. Funds will be drawn from this account as needed for burials, headstone foundations, and other internment-related tasks according to the unit pricing included in the contract attached as Exhibit A. Costs associated with burials, headstone foundations, and other related services are reimbursed to the Village by the owners of the cemetery plots in the Cemetery Fund.

Recommendation
Approval.

Background
On May 14, 2025, staff issued a Request for Proposals (RFP) with detailed specifications for burials and related services ("***Burial Services***") which was published to the Village website, with one proposal was submitted on May 23, 2025 by Property Werks of Northern Illinois, Inc. D/B/A Professional Cemetery Services of Dundee, Illinois.

Following this initial process, staff reached out to a number of local municipal and private cemeteries to try and identify additional vendors to send the Village's RFP. Three additional vendors were identified and included on the list for distribution of the RFP. On June 16, 2025, staff re-issued the RFP and sent it the four (4) contractors in addition to posting it on the Village's website. On June 27, 2025, staff again received one proposal from Property Werks of Northern Illinois, Inc. D/B/A Professional Cemetery Services of Dundee, Illinois.

After the second issuance, staff reached out to the three other contractors who were sent the RFP to inquire why they did not submit a proposal. The reasons cited included that they did

not provide services in the Village's geographic area, were unable to take on additional work at this time, or could not meet all of the service requirements outlined in the RFP. Based on this feedback and the limited availability of qualified vendors, staff recommends waiving the competitive sealed proposal process and awarding this contract to Property Werks of Northern Illinois, Inc. D/B/A Professional Cemetery Services of Dundee, Illinois ("Contractor"). Waiving of the competitive sealed bids is standard practice when only a single bid response is received.

The Contractor has provided Burial Services to the Village since 2019 and the Village has been satisfied with their performance. After review, staff is confident that the Contractor can successfully complete the work as specified. Staff recommends entering into a two-year agreement with the Contractor for Burial Services. The initial term of the agreement will be from August 12, 2025 through April 30, 2027. The Village has the option to renew the contract for up to three (3) additional one-year renewals. The Contractor may request an escalation in the price for services to be performed under the extended agreement by giving written notice to the Village. The allowable escalation of the agreement shall be limited to the lesser of (i) the annual average percentage increase in the Chicago Consumer Price Index (CPI) for All Urban Consumers, the previous 12-month period, or (ii) three percent (3%).

Staff will be present at the Village Board of Trustees meeting to answer any questions that may arise.

A Resolution Waiving Competitive Bidding and Authorizing an Agreement for Cemetery Burials & Related Services with Property Werks of Northern Illinois, Inc. D/B/A Professional Cemetery Services of Dundee, Illinois
Exhibit A - Professional Cemetery Services Contract & Schedule of Pricing

Resolution 2025-_____

BE IT RESOLVED by the President and Board of Trustees of the Village of Northbrook, County of Cook and State of Illinois, THAT:

A Resolution Waiving Competitive Bidding and Authorizing an Agreement for Cemetery Burials & Related Services with Property Werks of Northern Illinois, Inc. D/B/A Professional Cemetery Services of Dundee, Illinois

is hereby adopted, as follows:

Section 1. Recitals.

The Village currently owns three municipal cemeteries: the North Northfield Cemetery, the Northfield Union Cemetery and St. Peter Cemetery. The Village's Public Works Department is responsible for managing all burials, landscape maintenance, headstone foundations, plot sales and other related work to keep the cemeteries operational and well maintained.

On May 14, 2025, staff issued a Request for Proposals (RFP) with detailed specifications for burials and related services ("***Burial Services***"), which was published to the Village website, but only one proposal was submitted on May 23, 2025 by Property Werks of Northern Illinois, Inc. D/B/A Professional Cemetery Services of Dundee, Illinois ("***Contractor***"). Staff contacted other municipal and private cemeteries in order to help identify additional contractors that may perform this work. On June 16, 2025, staff re-issued the RFP. The RFP was sent to four contractors and the RFP was also posted on the Village's website. On June 27, 2025, staff received one proposal from the Contractor. Following the second issuance of the RFP Village staff conducted outreach to the three other contractors to whom the RFP was distributed to ascertain the reasons for their non-submission. The responses provided included: lack of service coverage in the Village's geographic area, current inability to assume additional work, and insufficient capacity to fulfill the full scope of services as outlined in the RFP. Based on this feedback, the Contractor's record of satisfactory past performance, and the Contractor's submitted proposal meeting the needs of the Village's requested services, staff recommends that the Village waive the competitive sealed proposal process and award the contract to the Contractor.

Staff recommends entering into a two-year agreement with the Contractor for Burial Services. The initial term of the agreement will be from August 12, 2025 through April 30, 2027. The Village has the option to renew the agreement for up to three additional one-year renewals, if approved and accepted by both the Village and the Contractor ("***Agreement***").

The Village's Fiscal Year 2025-26 Budget provides sufficient funds in Cemetery Fund Account No. 20-1000-524-00 for Burial Services at the three municipal cemeteries. The Village is reimbursed for all costs associated with burials, headstone foundations and other related services by the owners of the cemetery plots.

Based on these factors, Village staff recommends approval of an Agreement for Burial Services between the Village and the Contractor in accordance with the unit prices set forth in ***Exhibit A***.

The President and the Board of Trustees have considered the Agreement and determined that it is in the best interests of the Village and the public to enter into the Agreement.

Section 2. Waiver of Competitive Proposals.

The requirement that competitive, sealed proposals be solicited for this Agreement is hereby waived based on the Contractor providing professional Burial Services which require a high degree of professional skill where the ability of the Contractor plays an important role in conformance with the requirements for competitive sealed proposals.

Section 3. Approval of Agreement.

The Agreement shall be, and is hereby, approved in a form acceptable to the Village Attorney and the Village Manager.

Section 4. Authorization to Execute Agreement.

The Village Manager and Village Clerk shall be, and are hereby, authorized and directed to execute and seal, on behalf of the Village, the Agreement only after receipt by the Village Clerk of at least three original copies of the Agreement executed by the Contractor; provided, however, that if such executed copies of the Agreement are not received by the Village Clerk within 30 days after the date of adoption of this Resolution, then this authority to execute and seal shall, at the option of the President and the Board of Trustees, be null and void.

Section 5. Authorization of Expenditure.

The Village Manager is hereby authorized and directed to execute such documents and make such payments as are necessary to complete the procurement of the Burial Services from the Contractor at the prices set forth in ***Exhibit A***.

Approved:

RESULT:
MOVER:
SECONDER:
AYES:
NAYES:
ABSTAIN:
ABSENT:

ATTEST:

_____
Village President

_____
Village Clerk

VILLAGE OF NORTHBROOK

REQUEST FOR PROPOSALS

OWNER:
Village Of Northbrook
655 Huehl Road
Northbrook, IL 60062

PROPOSAL SUBMISSION INFORMATION:

Date of RFP Issuance:
Monday, June 16, 2025 – 1:00 p.m.

Proposal Submittal Deadline:
Friday, June 27, 2025 – 10:00 a.m.

Owner will receive sealed proposals for the Work generally described as follows:

Provide burials and related services at three (3) municipal cemeteries owned by the Village of Northbrook.

TO BE SUBMITTED TO: **Northbrook Public Works Department, 655 Huehl Road, Northbrook, Illinois 60062, Attn: Jean Paul Soens, before 10:00 a.m., on June 27, 2025.**

INSTRUCTIONS TO PROPOSERS

Preparation of Proposals
All proposals for the work shall be made on the blank Contract/Proposal forms attached to this Request for Proposals (RFP) and shall be complete with a price for each and every item named in the Schedule of Prices section of the Contract/Proposal form. All proposals must be signed by an authorized official. Proposals that contain omissions, erasures, alterations, or additions not called for, conditional or alternate proposals unless called for, or that contain irregularities of any kind may be rejected.

Clarifications
Owner reserves the right to make clarifications, corrections, or changes in this Request for Proposals at any time prior to the time proposals are opened. All proposers or prospective proposers will be informed of said clarifications, corrections or changes. Any questions regarding the Owner's intent can be directed to Jean Paul Soens, Management Analyst at (847) 664-4128. All addendums must be acknowledged as indicated on page **3** of this document for responses to this RFP to be considered complete.

Delivery of Proposals
Each proposal shall be submitted in a sealed envelope plainly marked with the title of the contract and Proposer's full legal name and shall be addressed and delivered to the place and before the time set forth above. Proposals may be delivered by mail or in person. Proposals received after the time specified above will be returned unopened.

Opening of Proposals

Proposals will be publicly opened and read at the time and place specified above. Proposers, their authorized agents, and interested parties are invited to be present.

Withdrawal of Proposals
No proposal shall be withdrawn for a period of 45 days after the opening of any proposal.

Rejection of Proposals
Proposals that are not submitted on the Contract/Proposal form or that are not prepared in accordance with these Instructions to Proposers may be rejected. If not rejected, Owner may demand correction of any deficiency and accept the deficiently prepared proposal upon compliance with these Instructions to Proposers.

Acceptance of Proposals
Proposals submitted are offers only and the decisions to accept or reject is a function of quality, reliability, capability, reputation, and expertise of the proposers.

Owner reserves the right to accept the proposal that is, in its judgment, the best and most favorable to the interests of Owner and to the public; to reject the low price proposal; to accept any item of any proposal; to reject any and all proposals; and to waive irregularities and informalities in any proposal submitted or in the request for proposal process; provided, however, the waiver of any prior defect or informality shall not be considered a waiver of any future or similar defect or informality. Proposers should not rely upon, or anticipate, such waivers in submitting their proposal.

Upon acceptance of the successful Proposer's proposal by Owner, the successful Proposer's proposal, together with Owner's notification of acceptance in the form attached to this Request for Proposals, shall become the contract for the Work.

DATED this 16th day of June 2025.

VILLAGE OF NORTHBROOK

By: Jean Paul Soens
Management Analyst

VILLAGE OF NORTHBROOK

CONTRACT/PROPOSAL FOR
CEMETERY BURIALS & RELATED SERVICES

Full Name of Proposer: Property Werks Of Northern IL DBA Professional Cemetery Services
"Proposer"

Principal Office Address: 156 Williams St Carpentersville IL 60110

Local Office Address: _____

Contact Person: Mark Christopherson E-mail: Mark@pcs.team

Telephone: 847-343-4836 Fax: _____

TO: Northbrook Public Works Department
655 Huehl Road
Northbrook, IL 60062
Attention: Jean Paul Soens, Management Analyst

Proposer warrants and represents that Proposer has carefully examined the Work Site described below and its environs and has reviewed and understood all documents included, referred to, or mentioned in this bound set of documents, including Addenda Nos. _____**[if none, write "None"]**, which are securely stapled to the end of this Contract/Proposal.

1. Work Proposal

A. Contract and Work. If this Contract/Proposal is accepted, Proposer proposes, and agrees, that Proposer shall, at its sole cost and expense, provide, perform, and complete, in the manner specified and described, and upon the terms and conditions set forth, in this Contract/Proposal and Owner's written notification of acceptance in the form included in this bound set of documents, all of the following, all of which is herein referred to as the "Work":

1. Labor, Equipment, Materials and Supplies. Provide, perform, and complete, in the manner specified and described in this Contract/Proposal, all necessary work, labor, services, transportation, equipment, materials, supplies, information, data, and other means and items necessary for burials and related services at the three (3) municipal cemetery locations indicated in Attachment B - Specifications (the "Work Sites").

2. Permits. Procure and furnish all permits, licenses, and other governmental approvals and authorizations necessary in connection therewith;

3. Bonds and Insurance. Procure and furnish all bonds and insurance certificates specified in this Contract/Proposal;

B. BASIS FOR DETERMINING PRICES

It is expressly understood and agreed that:

1. All prices stated in the Schedule of Prices in Attachment A are firm and shall not be subject to escalation or change except as described in Sections 6 and 7 of Attachment B for contract renewals;

2. Owner is not subject to state or local sales, use, and excise taxes, that no such taxes are included in the Schedule of Prices in Attachment A , and that all claim or right to claim any additional compensation by reason of the payment of any such tax is hereby waived and released; and

3. All other applicable federal, state, and local taxes of every kind and nature applicable to the Work are included in the Schedule of Prices in Attachment A.

4. The approximate quantities set forth in the Schedule of Prices for each Unit Price Item are Owner's estimate only based upon historical yearly averages or for proposal comparison purposes, that Owner reserves the right to increase or decrease such quantities, that payment for each Unit Price Item shall be made only on the actual number of acceptable units of such Unit Price Item installed complete in place in full compliance with this Contract/Proposal, and that all claim or right to dispute or complain of any such estimated quantity, or to assert that there was any misunderstanding in regard to the nature or amount of any Unit Price Item to be provided or performed, is hereby waived and released.

C. TIME OF PAYMENT

It is expressly understood and agreed that all payments shall be made in accordance with the following schedule:

Payments to be made on a monthly basis after successful completion of work items included on the monthly invoice. Payments are typically made within 3 weeks of receipt of invoice. Occasional cancellations of a bimonthly Village Board Meeting may delay payments.

All payments may be subject to deduction or set off by reason of any failure of Proposer to perform under this Contract/Proposal.

3. Contract Time Proposal

If this Contract/Proposal is accepted, Proposer proposes and agrees, that Proposer shall commence the Work on the date specified in Section 6 of Attachment B of this Contract/Proposal provided Proposer shall have furnished to Owner all insurance certificates specified in this Contract/Proposal (the "Commencement Date"). If this Contract/Proposal is accepted, Proposer proposes, and agrees, that Proposer shall perform the Work diligently and continuously and shall complete the Work at the timeframes specified in Attachment B.

4. Financial Assistance

A. Bonds. Not required.

B. Insurance. If this Contract/Proposal is accepted, Proposer proposes and agrees, that Proposer shall provide certificates of insurance evidencing the minimum insurance coverages and limits set forth below within 10 days following Owner's acceptance of this Contract/Proposal. Such policies shall be in form, and from companies, acceptable to Owner. The insurance coverages and limits set forth below

shall be deemed to be minimum coverages and limits and shall not be construed in any way as a limitation on Proposer's duty to carry adequate insurance or on Proposer's liability for losses or damages under this Contract/Proposal. The minimum insurance coverages and limits that shall be maintained at all times while providing, performing, or completing the Work are as follows:

1. Workers' Compensation and Employer's Liability. Limits shall not be less than:

Workers' Compensation: Statutory

Employer's Liability:
$500,000 ea. accident-injury
$500,000 ea. employee-disease
$500,000 disease-policy

Such insurance shall evidence that coverage applies to the State of Illinois.

2. Comprehensive Motor Vehicle Liability

Limits for vehicles owned, non-owned or rented shall not be less than:

$1,000,000 Bodily Injury and Property Damage Combined Single Limit

3. Comprehensive General Liability

Limits shall not be less than:

$1,000,000 Bodily Injury and Property Damage Combined Single Limit.

Coverage is to be written on an "occurrence" basis.

Coverage to include:

- Premises Operations
- Products/Completed Operations
- Independent Contractors
- Personal Injury (with Employment Exclusion deleted)
- Broad Form Property Damage Endorsement
- "X," "C," and "U"
- Contractual Liability

Contractual Liability coverage shall specifically include the indemnification set forth below.

4. Umbrella Liability

Limits shall not be less than:

$2,000,000 Bodily Injury and Property Damage Combined Single Limit.

This Policy shall apply in excess of the limits stated in 1, 2 and 3 above.

C. Indemnification. If this Contract/Proposal is accepted, Proposer proposes, and agrees, that Proposer shall indemnify, save harmless, and defend Owner against all damages, liability, claims, losses, and expenses (including attorneys' fees) that may arise, or be alleged to have arisen, out of or in connection with Proposer's performance of, or failure to perform, the Work or any part thereof, or any failure to meet the representations and warranties set forth in Section 6 of this Contract/Proposal.

D. Penalties. If this Contract/Proposal is accepted, Proposer proposes, and agrees, that Proposer shall be solely liable for any fines or civil penalties that are imposed by any governmental or quasi-governmental agency or body that may arise, or be alleged to have arisen, out of or in connection with Proposer's performance of, or failure to perform, the Work or any part thereof.

5. Firm Proposal

All prices and other terms stated in this Contract/Proposal are firm and shall not be subject to withdrawal, escalation, or change provided Owner accepts this Contract/Proposal within 45 days after the date this sealed Contract/Proposal is opened.

6. Proposer's Representations and Warranties

In order to induce Owner to accept this Contract/Proposal, Proposer hereby represents and warrants as follows:

A. The Work. The Work, and all of its components, shall be of merchantable quality; shall be free from any latent or patent defects and flaws in workmanship, materials, and design; shall strictly conform to the requirements of this Contract/Proposal, including without limitation, the performance standards set forth in Subsection 1B of this Contact/Proposal; and shall be fit, sufficient, and suitable for the purposes expressed in, or reasonably inferred from, this Contract/Proposal and the warranties expressed herein shall be in addition to any other warranties expressed or implied by law, which are hereby reserved unto Owner.

B. Compliance with Laws. The Work, and all of its components, shall be provided, performed, and completed in compliance with, and Proposer agrees to be bound by, all applicable federal, state, and local laws, orders, rules, and regulations, as they may be modified or amended from time to time.

C. Not Barred. Proposer is not barred by law from contracting with Owner or with any other unit of state or local government as a result of (i) a delinquency in the payment of any tax administered by the Illinois Department of Revenue unless Proposer is contesting, in accordance with the procedures established by the appropriate revenue act, its liability for the tax or the amount of the tax as set forth in 65 ILCS 5/11-42.1-1; or (ii) a violation of either Sec. 33E-3 or Sec. 33E-4 of Art. 33 of the Criminal Code of 1961, 720 ILCS 5/33E-1 et seq.

D. Qualified. Proposer has the requisite experience, ability, capital, facilities, plant, organization, and staff to enable Proposer to perform the Work successfully and promptly and to commence and complete the Work within the Contract Price and Contract Time Proposals set forth above.

7. Acknowledgments

In submitting this Contract/Proposal, Proposer acknowledges and agrees that:

A. Reliance. Owner is relying on all warranties, representations, and statements made by Proposer in this Contract/Proposal.

B. Reservations of Rights. Owner reserves the right to reject any and all proposals, reserves the right to reject the low price proposal, and reserves such other rights as are set forth in the instructions to Proposers.

C. Acceptance. If this Contract/Proposal is accepted, Proposer shall be bound by each and every term, condition, or provision contained in this Contract/Proposal and in Owner's written notification of acceptance in the form included in this bound set of documents.

D. Remedies. Each of the rights and remedies reserved to owner in this Contract/Proposal shall be cumulative and additional to any other or further remedies provided in law or equity or in this Contract/Proposal.

E. Time. Time is of the essence of this Contract/Proposal and, except where stated otherwise, references in this Contract/Proposal to days shall be construed to refer to calendar days.

F. No Waiver. No examination, inspection, investigation, test, measurements, review, determination, decision, certificate, or approval by Owner, whether before or after Owner's acceptance of this Contract/Proposal; nor any information or data supplied by Owner, whether before or after Owner's acceptance of this Contract/Proposal; nor any order by Owner for the payment of money; nor any payment for, or use, possession, or acceptance of, the whole or any part of the Work by Owner; nor any extension of time granted by Owner; nor any delay by Owner in exercising any right under this Contract/Proposal; nor any other act or omission of Owner shall constitute or be deemed to be an acceptance of any defective, damaged, or nonconforming Work, nor operate to waive or otherwise diminish the effect of any representation or warranty made by Proposer; or of any requirement of provision of this Contract/Proposal; or of any remedy, power, or right of Owner.

G. Severability. The provisions of this Contract/Proposal shall be interpreted when possible to sustain their legality and enforceability as a whole. In the event any provision of this Contract/Proposal shall be held invalid, illegal, or unenforceable by a court of competent jurisdiction, in whole or in part, neither the validity of the remaining part of such provision, nor the validity of any other provisions of this Contract/Proposal shall be in any way affected thereby.

H. Amendments. No modification, addition, deletion, revision, alternation, or other change in this Contract/Proposal shall be effective unless and until such change is reduced to writing and executed and delivered by Owner and Proposer.

I. Assignment. Neither this Contract/Proposal, nor any interest herein, shall be assigned or subcontracted, in whole or in part, by Proposer except upon the prior written consent of Owner.

J. Governing Law. This Contract/Proposal, and the rights of the parties under this Contract/Proposal shall be interpreted according to the internal laws, but not the conflict of law rules, of the State of Illinois.

DATED this 20 day of May, 2025

Proposer's Status: ( ) IL (State) Corporation

( ) _____ (State) Partnership

( ) _____ Individual Proprietor

Proposer's Name: Property Werks on Northern IL Inc

D/B/A (if different): Professional Cemetery Services

Signature of Proposer or Authorized Agent: Mark Christopherson

(corporate seal)

Printed Name: Mark Christopherson

Title/Position: President

Proposer's Business Address: 156 Williams St Carpentersville IL 60110

Proposer's Business Telephone Number: 847-343-4836

Facsimile Number: _____

If a Corporation or Partnership, list all Officers or Partners:

Name	Title	Address
Mark Christopherson	President	156 Willaims St Carpentersville IL 60110

ACCEPTANCE

The Contract/Proposal attached hereto and by this reference incorporated herein and made a part hereof is hereby accepted by the order of the Village of Northbrook ("Owner") this _____ day of _____, 2025.

This Acceptance, together with the Contract/Proposal attached hereto, constitutes the entire and only agreement between the parties relating to the accomplishment of the Work and the compensation therefor and supersedes and merges any other prior or contemporaneous discussions, agreements, or understandings, whether written or oral, and shall prevail over any contradictory or inconsistent terms or conditions contained in any purchase order, acceptance, acknowledgment, invoice, or other standard form used by the parties in the performance of the Contract/Proposal. Any such contradictory or inconsistent terms or conditions shall be deemed objected to by Owner without further notice of objection and shall be of no effect nor in any circumstances binding upon Owner unless accepted by Owner in a written document plainly labeled "Amendment to Contract/Proposal." Acceptance or rejection by Owner or any such contradictory or inconsistent terms or conditions shall not constitute acceptance of any other contradictory or inconsistent terms or conditions.

(SEAL)

Attest/Witness:

VILLAGE OF NORTHBROOK

By: _____
Derek Gau
Title: Village Clerk

By: _____
Cara Pavlicek
Title: Village Manager

REFERENCES

Proposals must include a minimum of three (3) references for clients with whom your company currently maintains a contract for services comparable to those specified in this Request for Proposals. References for municipal entities are preferred.

Client: Village of Northbrook

Contact Name: Deanna Hardt

Contact Phone: 847-664-4126 Contact E-mail: _____

Client: _____

Contact Name: _____

Contact Phone: _____ Contact E-mail: _____

Client: _____

Contact Name: _____

Contact Phone: _____ Contact E-mail: _____

Client: _____

Contact Name: _____

Contact Phone: _____ Contact E-mail: _____

Client: _____

Contact Name: _____

Contact Phone: _____ Contact E-mail: _____

ATTACHMENT B

SPECIFICATIONS

1. General

The Village of Northbrook is seeking proposals from qualified firms to provide contractual burials and related services at three (3) municipal cemeteries. The objective of these specifications is to define the conditions under which contractual services are to be provided.

2. Work Sites

The work shall be performed at the following locations:

1) North Northfield Cemetery, 3750 Dundee Road – Approx. 2.3 acres
2) Northfield Union Cemetery, 3035 Dundee Road– Approx. 2.1 acres
3) St. Peter Cemetery, 2785 Shermer Road– Approx. 2.9 acres

3. Scope of Services

All work and material not otherwise described shall be of the best quality, and should any workmanship or materials be needed which are not directly or indirectly set forth in his proposal, but which are nevertheless necessary to the proper execution according to the obvious intent, the Contractor will understand same to be implied and shall provide for it in their proposal.

3.1 Burials – Full Body

The Contractor will be required to excavate gravesites to provide ample space for the concrete burial vault. The depth of the vault shall be approximately 4.5 to 5 feet to the bottom with minimum cover of 18 inches. Upon completion of interment, the Contractor shall backfill the grave leaving only enough dirt mounded for anticipated settlement. All excess dirt shall be lawfully disposed of offsite.

The Village Cemetery Manager will assist the Contractor in locating the proper gravesite to be opened at least 24 hours in advance of the scheduled interment.

Graves will be allowed to settle for approximately 8 weeks before final restoration. Late season or winter burials will be restored in the following spring as weather permits.

Contractor will be required to protect all surrounding grave markers, monuments, trees, plants, decorations, etc. from their operations. Should a marker need to be temporarily relocated for excavating equipment access, the contractor will perform this routine work at no extra cost. Exceptional circumstances will be negotiated on a case by case basis.

Village will provide as much advanced notice as possible of a scheduled burial, however, the Contractor must be available to perform burial services with a minimum of 48 hours notification.

Burials will be scheduled between the hours of 9:00 a.m. and 5:00 p.m. Monday through Saturday. The Schedule of Prices (Attachment A) includes a line for the cost of a burial outside these hours or on Sundays and legal holidays. Graves shall typically be opened a day before interment and securely protected with plywood. All graves must be closed the same day immediately following interment. The contractor will be required to be on site during the burial should an excavation require any last minute dirt removal due to wall collapse or other reason.

The Schedule of Prices (Attachment A) also includes a line for winter burials where the frost line is greater than 6 inches thick at the gravesite.

The cost for full body burials shall include all labor, gravesite location fee, excavation, backfill and final restoration (including min. 4" pulverized topsoil, grass seed and fertilizer).

3.2 Burials – Cremains

The Contractor will be required to excavate a hole deep and wide enough to accommodate a standard sized urn (or urn vault) no larger than 12" x 12". Larger or unusual custom made containers will be negotiated on a case by case basis. Urns shall be buried at a depth to provide a minimum of 18 inches of cover upon backfill. The contractor will be required to be on site to assist with installation of the urn (if requested by officiant or family) and backfill of the excavation.

The cost for cremains burials shall include all labor, gravesite location fee, excavation, backfill and final restoration (including min. 4" pulverized topsoil, grass seed and fertilizer).

3.3 Headstone Foundations – No Collar

This work involves the installation of a poured concrete foundation to support a headstone (or footstone). The size of the foundation will be provided by the Village and will match the footprint of the grave marker to be installed. The depth of the foundation shall be calculated at approximately 2/3 the height of the headstone but not less than 12 inches.

The Village Cemetery Manager will meet with the Contractor on site to locate the exact location for the grave marker.

This work shall be paid for per cubic foot of concrete poured and include all labor, excavation, forms, grave location fee and restoration.

3.4 Headstone Foundations – Finished Collar

This work involves the installation of a poured concrete foundation to support a headstone (or footstone) with a 3" exposed finished collar. The exposed concrete collar shall be edged and lightly broom finished. The size of the foundation will be provided by the Village and will be the dimension of the grave marker footprint plus 3 inches on all sides. The depth of the foundation shall be calculated at approximately 2/3 the height of the headstone but not less than 12 inches.

The Village Cemetery Manager will meet with the Contractor on site to locate the exact location for the grave marker.

This work shall be paid for per cubic foot of concrete poured and include all labor, excavation, forms, grave location fee and restoration.

3.5 Headstone Foundation Removal

This work involves the removal of an existing concrete or brick foundation typically for installation of a new foundation and grave marker.

This work shall be paid for per cubic foot of foundation removed and include all excavation, disposal of concrete/brick, dirt backfill and restoration.

3.6 Bronze Plaque Installation (St. Peter Cemetery Only)

The St. Peter Cemetery has an area for cremains identified as the "Memorial Garden". Urns are buried in this section and capped with a 3" x 5" bronze plaque set in poured concrete measuring approximately 12" x 12" x 6". A cross-section detail of this installation will be provided to the successful Proposer.

Attachment A provides two pay items for installation immediately after the burial or if the contractor must return at a later date to install the plaque.

This work shall be paid for per each installation and include all labor, excavation, concrete, forms and restoration. The bronze plaque will be provided by others.

3.7 Disinterment

Disinterment requests are extremely rare. Should the need for a full body vault or cremains disinterment arise, the cost for this work will be negotiated on a case-by-case basis.

3.8 Headstone Setting and Resetting

Headstone setting and resetting are also rare and are typically required when a headstone is being exchanged for a new larger grave marker. Resetting stones may also be required due to severe settlement or vandalism. If required, the cost for this will be negotiated on a case-by-case basis.

4. Work Reports

All invoices shall include a detailed work report that incudes at minimum, the date, location of work, work description, labor hours, equipment and materials used.

5. Working Hours

Work shall be performed generally between the hours of 7:00 a.m. and 5:00 p.m., Monday through Friday or on Saturdays between 9:00 a.m. and 5:00 p.m. No work will be performed on Sundays or outside the normal working hours without written authorization from the Village Cemetery Manager.

6. Term of Contract and Renewal for Subsequent Years

The initial term of this agreement shall be for twenty-four (24) months commencing on or around August 12, 2025 and expire April 30, 2027. Owner reserves the right, but shall be under no obligation, to offer to renew the term of the agreement by one-year periods for a maximum of three (3) additional years, if approved and accepted in writing by both the Contractor and the Village.

Owner shall notify Contractor of its desire to renew the Contract on or about March 1st of the current maintenance year. Contractor shall reply to the Village no later than March 15th whether or not it will enter into a renewal of the Contract.

The initial Contract places no obligation on the Village to appropriate funds for cemetery maintenance and burial services beyond the initial term and contract extensions are dependent upon sufficient funds being appropriated each fiscal year. If the Contract is not renewed for any maintenance year, it shall not be renewable for any subsequent maintenance years.

7. Payment Escalation

In the event this agreement is extended in accordance with Section 6, the Contractor may request an escalation in the price for services to be performed under the extended agreement by giving written notice to the Village. The allowable escalation of the agreement shall be limited to the lesser of (i) the annual average percentage increase in the Chicago Consumer Price Index (CPI) for All Urban Consumers, as published by the Bureau of Labor Statistics (available at 312-353-1880 or www.bls.gov) for the previous 12-month period, or (ii) three percent (3%). Only one increase shall be allowed in any agreement extension period. The Village may elect to rebid the service in the event of such notice but shall be obligated to rebid if a notice of price increase exceeds the CPI for the Chicago Metropolitan area.

8. Agreement Termination

Notwithstanding any other rights of cancellation contained herein, the Owner reserves the sole right

to cancel this agreement, with or without cause, by serving notice to the Contractor, by certified mail, return receipt requested, of such intent to cancel this entire agreement no less than thirty (30) days prior to any such proposed cancellation date. Such cancellation to be without recourse, except for any sums owed to either party at the time of cancellation. The Contractor acknowledges that all work performed under this agreement is contingent upon the Village Board's approval of the funding for the work. The Contractor shall continue to perform all agreed upon work until the date of cancellation of the agreement.

ATTACHMENT A

SCHEDULE OF PRICES
CEMETERY BURIALS & RELATED SERVICES

After becoming familiar with the general conditions, special conditions, specifications and addenda attached hereto, the undersigned offers the following prices including all supervision, labor, materials and equipment for providing burials and related services at three (3) municipal cemeteries owned by the Village of Northbrook.

A. Schedule of Prices: For providing, performing, and completing all Work, the sum of products resulting from multiplying the number of estimated units by the Unit Price set forth in the cost table below.

North Northfield, Northfield Union & St. Peter Cemeteries – *Burials and Related Services*				
Line	Unit Price Item	Section Reference (Attachment B)	Unit	Unit Price
1	Burials – Full Body	3.1	Each	$ 1120.00 (Sat $1245.00)
2	Burials – Cremains	3.2	Each	$ 625.00 (Sat $750.00)
3	Headstone Foundation No Collar	3.3	Cubic Foot	$ $115.00 Sq Ft
4	Headstone Foundation Finished Collar	3.4	Cubic Foot	$ 145.00 Sq Ft
5	Headstone Foundation Removal	3.5	Cubic Foot	$ $116.00 Sq Ft
6	Setting of bronze plaque – same day as cremains burial (St. Peter Cemetery Only)	3.6	Each	$ 266.00
7	Setting of bronze plaque – later date after cremains burial (St. Peter Cemetery Only)	3.6	Each	$ 266.00
Percentage cost increase for Sunday and after hours (between 5 p.m. and 9 a.m.) burials 100 %				
Percentage cost increase for burials with ground frost in excess of 6 inches None %				

***Quantities are estimated for proposal purposes only. Exact quantities of each pay item will vary annually.**

B. Supplemental Rates: For providing labor and materials for services not specifically outlined in the Schedule of Prices cost table and pay item descriptions in Attachment B, Section 3.

Hourly Labor Rate $ 100.00

Mark Up for Materials None %

MEMORANDUM

To: Village Manager Cara Pavlicek
From: Police Chief John Ustich
Date: 2025-08-12
Subject: A Resolution Authorizing an Agreement for Staffing and Organizational Planning Services with Citygate Associates, LLC of Folsom, CA

Overview

As proposed in the FY26 Budget, an analysis of the Police Department's current staffing and service delivery levels and methods by an experienced consultant is recommended to partner with the Department and to develop strategic recommendations for future programming, staffing, and service levels.

Fiscal Impact

The adopted FY26 Budget provides funding in Account Number 11-2100-554-00 for a staffing study in an amount not to exceed $30,000. The selected vendor has proposed an all-inclusive cost of $99,508. Should this resolution be approved, a budget amendment for the balance of the cost will be submitted for the amount not covered by other identified budget savings.

Recommendation

Approval.

Background

On May 23, 2025, staff published a Request for Proposals (RFP) on the Village's website and reached out to known vendors who provide staffing study and management services. Staff received eleven responses by the submission deadline of June 13, 2025. Of the eleven responses, six vendors identified as the most responsive and qualified for the project were invited to interview. A staff committee, including multiple levels of Police Department management staff, interviewed the vendors during the week of June 30, 2025. Based on the proposals, interviews, reference checks, and the evaluation criteria listed in the RFP document, staff is recommending Citygate Associates, LLC of Folsom, CA.

Citygate Associates proposal was unanimously identified as the most responsive with demonstrated in-depth industry experience and they have been deemed to best meet the needs of the Village. To perform the scope of work identified in the Agreement, Citygate Associates will involve a multi-disciplinary team to perform such services as an on-site assessment of Police Department services, interviews with Police Department and Village staff, a Strengths, Weakness, Opportunities, and Threat (SWOT) analysis, meetings with key municipal stakeholders, a review of the Department's organizational structure, a review of core department functions and operations, a geographical zone analysis, a benchmark analysis to compare similar municipalities, an analysis of staffing levels and service demands, as well as a workload analysis. The full proposal, including the scope of work, is attached as Exhibit A. The timeline of the project is estimated to be six months. Staff will receive draft recommendations for consideration as warranted during the FY 26/27 annual budget process.

On April 8, 2025, the Village Board adopted the FY26 Annual Budget which included $30,000 for professional services related to a staffing study for the Police Department. This study is the third organizational study identified by the Village with a previous study of the Fire Department in 2022 and a study of the Village Manager's Office and Human Resources in 2023. In each instance, these studies provided an assessment of the current state and presented prioritized recommendations related to service and staffing levels to inform long term organizational planning.

The Police Department most recent staffing analysis was in 2007. At the conclusion of that process, the Village increased the number of authorized sworn officers from 63 to 66. Today, the Village remains a dynamic community where both the residential population and commercial property mix have both grown and developed overtime, contributing to the changing landscape of the Village.

For these reasons, staff recommends the approval of a professional services agreement, attached as Exhibit B, with Citygate Associates, LLC in the not to exceed amount of $99,508. Partial funding in the amount of $30,000 is available in Account Number 11-2100-554-00. A budget amendment will be forthcoming for the balance of the cost not covered by other budget savings, should the resolution be approved.

Staff will be present at the Village Board meeting on August 12th to answer any questions that may arise.

A Resolution Approving an Agreement to Provide Staffing and Organizational Planning Services
Exhibit A - Citygate Proposal
Exhibit B - Citygate Agreement FINAL
Supplemental Information - Village of Northbrook - Citygate Associates, LLC - Insurance Requirements
Supplemental Information - Non-Owned Autos Letter

Resolution 2025-__

BE IT RESOLVED by the President and Board of Trustees of the Village of Northbrook, County of Cook and State of Illinois, THAT:

A Resolution Authorizing an Agreement for Staffing and Organizational Planning Services with Citygate Associates, LLC of Folsom, CA

is hereby adopted, as follows:

Section 1. RECITALS.

The Adopted FY26 Budget provides funding in Account Number 11-2100-554-00 for a staffing study in an amount not to exceed $30,000. The Village is seeking to hire an experienced consultant to conduct an analysis of the Police Department's current staffing and service delivery levels and methods and to make strategic organizational recommendations for future programming, staffing, and service levels. The analysis will include dedicated vs. undedicated time for patrol officers, current delivery models, organizational structure, geographical zone configuration, the consideration of a new police facility, cost projections related to any recommendations, as well as stakeholder interviews. At the conclusion of the study, documentation will be provided that will inform appropriate staff levels and services and aligning organizational structure of the Police Department in the future.

On May 23, 2025, the Village published a Request for Proposals (RFP) on the Village's website and reached out to known vendors who provide staffing study and management services. Staff received eleven responses by the submission deadline of June 13, 2025. Of the eleven responses, Police Department staff invited six vendors who were thought to be the most responsive and qualified for the project to an interview. A staff committee, including multiple levels of department management staff, conducted interviews with the vendors during the week of June 30, 2025. Based on the proposals, the interviews, reference checks, and the evaluation criteria listed in the RFP document, staff recommends Citygate Associates, LLC of Folsom, CA as the preferred consultant to work the Village (**"*Vendor*"**).

The Vendor's proposal was deemed the most responsive and their representatives thoroughly demonstrated in-depth industry experience in the interview process. Based upon the Vendor's examples of previous projects, staff deems the Vendor will best meet the needs of the Village for these purposes. The scope of work provided by the Vendor will involve a multi-disciplinary team to include such services as an on-site assessment of department services, interviews with Police Department staff, a SWOT analysis, meetings with key municipal stakeholders, a review of the Department's organizational structure, a review of core department functions and operations, a geographical zone analysis, a benchmark analysis to compare similar municipalities, an analysis of staffing levels and service demands, as well as a workload analysis. The full proposal, including the scope work, is attached as ***Exhibit A***. The timeline of the project is estimated to be six months.

Based on these factors, the Police Chief recommends that the Village Board authorize an agreement ("***Agreement***") for Staffing and Strategic Planning Services (***"Services"***) from the Vendor in the not to exceed amount of $99,508.

The FY 2025/26 Village Budget provides partial funding for the cost of this Agreement in Account No. 11-2100-554-00. A budget amendment will be brought at a future meeting to the extent other budget savings is not available.

The President and the Board of Trustees have reviewed the expenditure and the Agreement and have determined that it is in the best interests of the Village and the public to approve and enter into the Agreement with the Vendor.

Section 2. APPROVAL OF AGREEMENT.

The Agreement for the procurement of the Services in an amount not to exceed $99,508 is approved in substantially the form attached to this Resolution as ***Exhibit B***, and in a final form to be approved by the Village Manager and Village Attorney.

Section 3. EXECUTION OF AGREEMENT.

The Village Manager is hereby authorized and directed to execute such documents and make such payments as are necessary to complete procurement of the Services from the Vendor, in accordance with the Agreement.

Section 4. EFFECTIVE DATE.

This Resolution shall be effective after its passage and approval by the Board of Trustees in the manner provided by law.

CITYGATE
POLICE SERVICES



PROPOSAL TO DEVELOP A POLICE DEPARTMENT STAFFING AND ORGANIZATIONAL PLAN

VILLAGE OF NORTHBROOK, IL

AUGUST 7, 2025

CITYGATE
POLICE SERVICES

WWW.CITYGATEASSOCIATES.COM
111 WOODMERE ROAD, SUITE 170
FOLSOM, CA 95630
PHONE: (916) 458-5100
FAX: (916) 983-2090

northbrook

CITYGATE
ASSOCIATES

111 WOODMERE ROAD, SUITE 170 ▪ FOLSOM, CA 95630 ▪ PH (916) 458-5100 ▪ FX (916) 983-2090

SECTION 1—COVER LETTER

August 7, 2025

Jason Batalden
Internal Services Administrator
Village of Northbrook Police Department
1401 Landwehr Road, Northbrook, IL 60062

RE: PROPOSAL TO DEVELOP A POLICE DEPARTMENT STAFFING AND ORGANIZATIONAL PLAN

Citygate Associates, LLC (Citygate), is pleased to present our proposal to serve the Village of Northbrook (Village) by developing a Staffing and Organizational Plan for the Police Department (Department).

> *"We work with consultants, obviously, all the time, but the work that Citygate did on this report is **some of the best I've seen** in my tenure here."*
>
> ***—Former San Diego County CAO***

We are confident that, upon review of our proposal and unique qualifications, you will find Citygate's team of consultants exceeds the Village's expectations. Citygate has an outstanding record of accomplishment with the agencies we serve. When Citygate commits to a client, we commit to their long-term success, far beyond the scope of an initial project. That is why 70 percent of Citygate's revenue results from repeat business, referrals, and other sole source procurements.

PROJECT UNDERSTANDING

Citygate understands that the Village desires a **comprehensive and objective assessment of the staffing needs of the Department**, including analysis of dedicated and undedicated time for patrol officers, current service delivery models, and the Department's organizational structure. The Village is seeking a report that will guide policymakers and the Department in prioritizing appropriate staffing levels and the services currently provided while organizationally planning for the future—honoring the Department's core values of integrity, pride, and quality of service.

Citygate's analysis will provide a blueprint for the Department to maximize efficiency and use of its personnel and resources—empowering the Department to ensure adequate service levels, improve operational effectiveness, and achieve the goals outlined through strategic initiatives.

Citygate also understands the deployment and staffing challenges facing many police agencies today. In fact, the recruitment and retention of quality personnel is the number one challenge facing local government agencies of all types throughout the country. Because of this, and at no additional cost to the Village, Citygate will include with our Final Report a brand-new resource, ***Staffing Innovations for Recruitment and Retention***—which includes numerous practical ideas and anecdotes from lead Citygate consultants to generate creative solutions and maximize the impact of your agency's staffing initiatives.

Citygate's consultants know well that the Department and Village will have to live with the outcome of our analysis. Therefore, *we will never offer a "one-size-fits-all" approach* to this engagement or the recommendations we ultimately deliver in our Final Report. Rather, we will make **actionable and implementable recommendations** that are carefully measured against best practices and *based upon the community's specific needs*, taking into account the experience of our consultants and knowledge gleaned from the Department's unique context and culture.

To empower the Department to best serve the community, Citygate's study will also identify barriers to achieving desired service levels—culminating in an analysis and implementation plan which positions the Department for success and supports effective and efficient public safety services well into the future.

> *"[Citygate's] work product was **exceptional**, incorporating all current **industry best practices** while **remaining practical** and achievable within our **operational constraints**."*
>
> ***—Cy-Fair Fire Department (TX) Fire Chief***

OUR QUALIFICATIONS

Citygate's capacity to provide meaningful coaching, mentorship, and relevant insight is unmatched. Our extensive experience with local government agencies throughout the country—*including in the Midwest*—has been guided by our Public Safety Principal, Stewart Gary—who has presided over more than 500 public safety studies for agencies of all sizes.

Additionally, the eight members of Citygate's multi-disciplinary Project Team are not just consultants. **They are practice specialists in their fields**.

Our Team members do not merely *understand* the work being done by the Department—they have successfully led agencies and worked at all levels of law enforcement themselves, with more than 150 years of cumulative experience in law enforcement and public safety. Citygate's Project Team

members have recent and current first-hand experience of the myriad difficult challenges facing the law enforcement profession in an ever-evolving cultural landscape, and they have a proven track record of robust community engagement, strategic analysis, goal-setting initiatives, state-of-the-art deployment and planning methods and tools, and successful implementation.

> Because Citygate's Project Team is comprised of former practicing professionals in police administration and service, **the Department is, in effect, receiving the expertise of an external "seasoned department head" team**, rather than the opinions of junior staff members or consultants who have spent little time on the front lines of public safety services and/or managing in local government.

Why is this experience critical?

- The Village is hiring external specialist assistance that understands (1) how to uncover tough issues and (2) how to work them to successful closure. Citygate knows the approaches needed and, as importantly, how to effectively communicate the results to *all* project stakeholders for an **actionable outcome**.
- Nationwide, *our public safety studies alone have served over 30 million residents*, including many small and suburban communities as well as metropolitan agencies serving populations greater than 400,000. Citygate possesses the crucial experience with varied service delivery challenges across **numerous regional fact patterns and regulatory environments**.
- If previously unidentified issues arise that require additional expertise, Citygate can call upon a staff of nearly 50 proven professionals and subject matter experts who possess deep, executive-level experience across the full array of local government functions. This flexibility represents the power and foundation of **Citygate's unique consulting philosophy of a "Virtual City Hall."** Few, if any, firms can offer this overall depth of expertise.

OUR SIGNATURE METHODOLOGY

There is no single formula or metric to address every police agency's staffing, utilization, deployment performance metrics, etc. For this reason, we have developed the **Citygate Operational Policing Strategy (COPS™) analysis model** to accurately assess your specific agency and provide coordinated best practice standards and recommendations that are attuned to your unique needs. COPS is an ***adaptive methodology*** by which Citygate chooses best practices and benchmarks from a matrix of options based on the local context, culture, values, and scale of your agency.

Because Citygate is not bound to any particular standards-setting organization—nor beholden to an exclusive methodological framework—we are free to choose from a variety of potential options based on what will be most effective for your agency specifically. Having assessed your community's unique local context and fact pattern, Citygate will determine the best-fit options from within that matrix, connecting the Department's performance and future goals to metrics, benchmarks, and best practices as found in the published work of such organizations as the International City/County Management Association (ICMA), the International Association of Chiefs of Police (IACP), the Police Executive Research Forum (PERF), the National Policing Institute (NPI), the National Emergency Number Association (NENA), the Association of Public-Safety Communications Officials-International (APCO), the International Academies of Emergency Dispatching (IAED), and other standards-setting organizations and cutting-edge scholars as appropriate to ensure our recommendations best fit your specific policing model and needs.

OUR CORE PRINCIPLE

Citygate applauds the Village's initiative in pursuing a thoughtful analysis of current law enforcement services and—given our extensive qualifications and tailored Work Plan—we can ensure an accurate assessment of the Village's unique situation is completed correctly *the first time*. **Our projects are built upon the core principle of helping agencies to build better government.** It is because of this core principle that Citygate is known as the "tough" problem team. We are frequently selected when the situation is complicated, nuanced, and/or polarizing, and the stakeholders cannot risk a poor project outcome.

On this basis, we enthusiastically look forward to serving the Village of Northbrook as it strives to provide its community with the most effective police services.

* * *

As President of the firm, I am authorized to execute a binding contract on behalf of Citygate. For questions concerning this proposal, please contact Stewart Gary, Citygate's Public Safety Principal, at (916) 458-5100, extension 305 or via email at **sgary@citygateassociates.com**. Please also send emails to **admin@citygateassociates.com** to ensure a prompt response.

Sincerely,

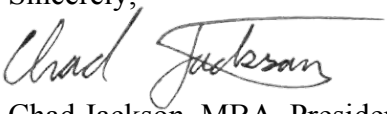

Chad Jackson, MBA, President

TABLE OF CONTENTS

Section **Page**

Section 1—Cover Letter ..... Precedes Table of Contents

Section 2—Contact Information Sheet 1

Section 3—Firm History 2
Firm Profile 2

Section 4—Project History and Qualifications 4
Industry-Leading Experience 4
Relevant Project History 7

Section 5—Project Team Resources 13
Proposed Team Organization 13
Project Team Overview 14

Section 6—Project Timeframe 19
Project Schedule 19
Project Management 19

Section 7—Approach and Methodology 20
Project Understanding 20
Project Approach 20
Value and Use of Data 22
Approach to Community Engagement 22
Project Methodology 23
COPS™ Adaptive Methodology 23
Proposed Project Work Plan 26
Study Components with Which the Department Must Assist 34

Section 8—Cost Proposal 35
Project Cost 35
Billing Schedule and Options 36
Pricing Terms 36

Section 9—References 37

Section 10—Other Information 39
Targeted Questions and Answers for this Engagement 39

Appendices

Appendix A—Code of Ethics
Appendix B—Project Team Resumes
Appendix C—Recent Client Letters of Reference

SECTION 2—CONTACT INFORMATION SHEET

As requested by the Village's RFQ/RFP, Citygate's summary contact information has been provided below.

Name:	Citygate Associates, LLC
Address:	111 Woodmere Road, Suite 170, Folsom, CA 95630
Phone:	916-458-5100 ext. 305 (Stewart Gary, Public Safety Principal)
Fax:	916-983-2090
Website:	https://citygateassociates.com/

SECTION 3—FIRM HISTORY

FIRM PROFILE

Founded in 1990, Citygate Associates, LLC is a cause-driven, character-based company comprised of senior public sector executives committed to public service. While Citygate's clients include agencies across the full array of local government functions, our Public Safety Services practice conducts staffing and deployment analyses, community risk assessments, strategic planning, facilities and fleet studies, organizational reviews, performance audits, GIS assessments, and consolidation feasibility analyses for local government agencies of all types and sizes throughout the United States.

Our leading ambition is to serve you and your community to cultivate good governance and transformational change.

We believe our qualifications to perform this review are exceptional. Over more than **24 years**, Chief Gary and his team of subject matter specialists have performed **well over 500 public safety studies, shaping crucial services for more than 30 million residents**.

In other words, Citygate has broad experience with the service delivery challenges across numerous fact patterns and regulatory environments—as well as the specific, recent regional experience that is most relevant to your community.

WHO ARE WE?
Citygate is…

- *A **Virtual City Hall** team of senior public executives that are dedicated to helping communities improve*
- *A firm with **35 years** of history exclusively serving over 700 local governments with an **unblemished track record** of no cancelled projects or litigation*
- *A **storyteller** who recognizes each client and project is unique that warrants a **customized report**, not one written from a standard template*
- *Built with an **emphasis on values and character**—our team members are chosen for more than the expertise conveyed through their resumes*
- *Motivated to **coach** clients and transfer our experiences*
- *A **trusted partner** who performs the project **with** you, not **to** you*

Further, if previously unidentified issues arise that require additional expertise, Citygate can call upon a staff of nearly 50 proven professionals and subject matter experts from varied local government disciplines to ensure the Village receives the most informed, up-to-date, practical, and workable recommendations. This flexibility represents the power and foundation of Citygate's unique consulting philosophy of a "Virtual City Hall."

Few, if any, firms can offer this overall depth of expertise.

WHY CHOOSE CITYGATE FOR THIS IMPORTANT PROJECT?

- **The Department serves an evolving population with evolving service demand.** You need a premier public safety services team.
- **Comprehensive, multi-stakeholder police projects MUST be completed correctly the first time!** We are regularly hired to clean up low-cost work and the "one-size-fits-all" approach of some other firms.
- **Nearly all agencies are experiencing STAFFING AND WORKLOAD DEMAND issues.** We have studied and assisted agencies with this problem numerous times over many years, especially recently.
- **We are frequently selected when the situation is complicated, nuanced, and/or polarizing**, and stakeholders cannot risk a poor project outcome.
- **You need a TOUGH problem team.** The Department represents a sizeable agency within a major metro area. Numerous, interwoven fact patterns are at play. We are routinely selected sole source when the project is **complex and urgent**.

SECTION 4—PROJECT HISTORY AND QUALIFICATIONS

INDUSTRY-LEADING EXPERIENCE

With nearly 100 personnel serving the Department, a service area within a major US metro region, and an annual budget over $24M, *the Department needs a premiere consulting firm*.

Citygate has conducted comprehensive staffing, operational, and organizational reviews and developed action plans for agencies of all sizes—and in all states of population growth or decline—helping them to incorporate changing, 21st-century policing best practices, implement new technologies, and creatively respond to personnel and deployment challenges. We recently completed a police department master plan and community social justice study for a city with a competitive procurement which included an elaborate interview process with a community selection committee, requiring the top three vendors to each conduct several videoconference public forums to facilitate a mock discussion of the project and perceived law enforcement issues in the community. After the interview process, we were told by the city that the selection committee appreciated how we listened more than we spoke.

Citygate's Public Safety practice has served some of the most diverse agencies seeking innovative solutions for complex challenges, with our public safety clients spanning the country—*including our extensive experience in the Midwest region of the US, and hundreds of engagements with agencies of the Department's size with service areas similar to that of the Village*.

> Significant to the Village's requested study, Citygate has recently completed **multiple engagements that are *nearly identical* to the Village's requested scope of work** and stated needs.
>
> Our current and recent police staffing, operational, and strategic-planning engagements include reviews conducted for the cities of St. Paul, Lino Lakes, and Minnetonka, MN; the city of Tulsa, OK (recently selected); the city of Surprise, AZ; the city of Lawrence, KS; and the California cities of Palmdale, Berkeley, San Mateo, La Mesa, Oceanside, and West Sacramento, as well as the County of Los Angeles. Citygate's consultant team has also performed significant public safety deployment and/or staffing reviews in St. Louis County, MO; Fort Worth, TX; Metro Houston, TX [Cy-Fair]; Portland, OR; St. San Diego County, CA (57 agencies); Orem and Ogden, UT; Portland, OR; Tacoma, WA; and more.

To convey Citygate's extensive public safety project experience, the following table illustrates one or more noteworthy projects completed in states we have consulted in, demonstrating the breadth of agency size and geography we have served. Note that the following is just a brief sampling of the more than 500 public safety studies Citygate has performed across the US.

Brief Sampling of Citygate Public Safety Clients by State

(of more than 500 public safety studies)

ALASKA

Valdez

ARIZONA

Eloy
Glendale
Goodyear
Maricopa
Surprise

CALIFORNIA

Berkeley
Elk Grove
Los Angeles
Los Angeles County
Monterey County
Orange County Fire Authority
Oceanside
Port of Long Beach
Port of Los Angeles
Sacramento
Sacramento Metro Fire
San Diego
San Diego County
San Jose

HAWAII

Maui County

IDAHO

Tamarack
Rock Creek

KANSAS

Andover
Lawrence

MINNESOTA

Bloomington
Eagan
Eden Prairie
Hastings
Inver Grove Heights
Lino Lakes
Minneapolis
Minnetonka
Shakopee
St. Paul

NEW YORK

Albany

NEW MEXICO

Rio Rancho

OHIO

Cleveland

OKLAHOMA

Enid
Tulsa

OREGON

Portland

TENNESSEE

Collierville

TEXAS

Cy-Fair Fire Department
Fort Worth
Georgetown
Lancaster
Missouri City
Mont Belvieu
Pearland
Port of Corpus Christi
Sugar Land
Taylor

UTAH

Ogden City
Orem
Provo
Salt Lake City
Weber County

WASHINGTON

DuPont
East Jefferson
Mukilteo
Pasco
Snohomish County
Tacoma
Vancouver

The following table further demonstrates the history of diverse and nuanced approaches to engagement required of Citygate, with agencies representing a wide variety of populations, fact patterns, regulatory environments, and unique challenges, including many suburban and regional communities of a comparable population to the Village.

Public Safety Agencies Served

NATIONWIDE CLIENTS with Service Populations Larger than 400,000	
City/County/District	**Approx. Population**
Los Angeles County, CA	4,067,549
Los Angeles, CA	3,898,747
San Diego County, CA	3,269,973
San Bernardino County, CA	2,181,654
Orange County Fire Authority, CA	1,807,862
San Diego, CA	1,386,932
San Jose, CA	1,013,240
Fort Worth, TX	927,720
Ventura County, CA	850,000
Contra Costa County FPD, CA	770,000
Sacramento Metro Fire, CA	738,000
Portland, OR	652,503
Cy-Fair Fire Department, TX	600,000+
Sacramento, CA	526,384
Monterey County, CA	500,000
Long Beach, CA	449,468
Minneapolis, MN	429,954
Tulsa, OK	411,894
Alameda County, CA	400,000

REGIONAL CLIENTS with Service Populations Under 100,000	
City/County/District	**Approx. Population**
Davenport, IA	100,000
Bloomington, MN	87,398
Woodbury, MN	79,538
Eagan, MN	68,855
Eden Prairie, MN	64,198
Minnetonka, MN	53,781
Shakopee, MN	47,158
Inver Grove Heights, MN	35,801
Hastings, MN	22,154
Lino Lakes, MN	22,000

Also, for a recent public safety proposal, Citygate had to obtain four letters of reference from recent clients. Our clients were enthusiastic at this opportunity to praise our services and prepared the **four letters of reference** provided in **Appendix C** to this proposal. The four clients include the Cy-Fair Fire Department, TX (Houston Metro); Surprise, AZ; Orange County Fire Authority, CA; and Glendale, CA.

In addition to this extensive experience, **Citygate delivers and exceeds expectations**. For a recent public safety consulting study proposal, Citygate was required to have three previous police services clients complete RFP reference forms evaluating our services. The result? *Citygate scored a 10 out of 10 in every category for every client*, as the following table shows.

Recent Evaluation Scores from Police Services Clients

Question	City of La Mesa, CA	City of San Mateo, CA	City of Surprise, AZ
How would you rate the customer service provided by this company?	**10**	**10**	**10**
Were the deliveries on time and correct?	**10**	**10**	**10**
Was the company and staff easy to work with?	**10**	**10**	**10**
What was the quality of services provided?	**10**	**10**	**10**
Was staff proactive in solving problems?	**10**	**10**	**10**
What was the extent of staff turnover? (10 = low staff turnover, 1 = high staff turnover)	**10**	**10**	**10**
Would you be willing to contract with this company again? (10 = Yes, 1 = No)	**10**	**10**	**10**

RELEVANT PROJECT HISTORY

The following engagements demonstrate Citygate's distinct experience and exceptional qualifications to perform this study. **We have recently completed multiple engagements that are *nearly identical* to the Village's requested scope of work and stated needs for this project**. To learn more about the hundreds of similar engagements Citygate has conducted, please visit our website.

Tulsa, OK – *Comprehensive Staffing Analysis of the Police Department*

Citygate is currently conducting a comprehensive staffing analysis and implementation plan that can serve the Tulsa Police Department for the next five years. Citygate's analysis will include findings and recommendations related to the Department's operational efficiency, effectiveness, and staffing needs—in addition to review of performance data, budgets, and reports. The analysis will address workforce needs while accounting for demographics, structure, patrol and investigative response gaps, calls for service, attrition rates, and future staffing costs—with a methodology that includes data collection and analysis, review of benchmark data collected from peer agencies, and an assessment to determine functions that can be handled more effectively by non-sworn, professional staff. Citygate's analysis will provide a blueprint for the Department to maximize efficiency and use of its personnel and resources, identifying planned service delivery systems and staffing levels which best empower the Department to ensure adequate service levels, improve operational effectiveness, and achieve the goals outlined in the Department's Strategic Plan.

Lawrence, KS – *Police Department Comprehensive Management Study*

Citygate performed a comprehensive management study for the Lawrence Police Department in Lawrence, Kansas. Citygate's assessment included a detailed analysis of every type of delivered services by the Department, covering its internal support services, community relations, and community oversight. A data-

driven review considered the adequacy of the existing deployment system, scheduling, and staffing. We reviewed response time, crime, and call data that drives the recommendations for staffing in Patrol. The project also entailed formal community listening sessions with approximately 100 diverse community stakeholders, including the faith-based community, civic organizations, students, elected officials, and law enforcement, as well as the elderly, LGBTQ+, African American, and Native American communities. In addition to interviews with the City Manager, the Chief of Police, and other key positions, this study also included an internet-based community survey to allow for the public to provide feedback regarding current and future services.

St. Paul, MN – *Organizational Study of the Police Department*

Citygate's Project Manager, Dr. Jack Serier, conducted an organizational and staffing study of the St. Paul Police Department. This comprehensive study of the entire agency (750 employees including 635 sworn officers) assessed all patrol districts within the Department's service area including crime profile and call response analysis, measured investigative unit productivity and effectiveness, examined training practices, and recommended efficiencies and restructuring to meet the staffing and operational challenges the department was facing during a time of increasing service demand in a constrained budget environment.

Chico, CA – *Police Department Strategic Plan*

Citygate is currently developing a Strategic Plan to align policy priorities with public resources for the City of Chico, CA. The Strategic Plan will include measurable outcomes to track success, setting a course of action for the next five years by establishing priorities; outlining actions to effectively achieve objectives; and establishing a framework for reporting progress to the Council, City Manager, and community. Through the strategic planning process, Citygate will assist the Department in organizing and consolidating work efforts, tracking progress, and increasing accountability and transparency to the public. The completed Strategic Plan will provide key objectives that support the Department's divisions, as well as workplans for implementation using key performance indicators to measure success. The strategic planning process for this engagement includes assessment and updating of the Department's mission, vision, and values statements; robust engagement of community stakeholders and Department personnel; and analysis of opportunities, critical issues, and service gaps. The final Strategic Plan will ensure simplicity and accessibility as the Department seeks to maximize clarity, efficiency, and transparency in pursuing Department and City goals.

Fort Worth, TX – *Fire and EMS Staffing and Operations Study*

Citygate conducted a fire and EMS staffing and operations study of the fire department for the City of Fort Worth, Texas. This comprehensive operational assessment included a comprehensive review of all services provided, including a comprehensive risk assessment, a staffing and headquarters programs assessment, a station location and improved service delivery assessment, and an analysis of the current EMS delivery model and assessment of options to improve service delivery based on current/future service demands. In addition, Citygate solicited input from a variety of Departmental stakeholders and City Hall.

City of Pasco, WA – *Police Department Strategic Plan (Including Staffing and Operations Review)*

Citygate completed a Police Department Strategic Plan for the city of Pasco, Washington, to review current and future service delivery, quality of service, service delivery expectations, community engagement, community priorities, Departmental organization, and staffing and deployment feasibility to maintain current and future organizational efficiency. This review examined current service delivery models; staffing levels; programming; management structure; operational efficiency; alternative response models; and

sustainability of mission, vision, and values. A fiscal review of the Police Department was also performed, and the report included an estimated cost for each of Citygate's staffing recommendations. As part of this engagement, a community survey was conducted in English and Spanish and community workshops were facilitated. After 36 Washington state legislative bills impacting law enforcement were signed into law during 2021, the City and Police Department also retained Citygate conduct a detailed review and analysis of the new bills. As part of this analysis, Citygate developed an impact and implementation matrix the Department will be able to utilize moving forward.

Orem, UT – *Operations Assessment for the Police and Fire Departments*

Citygate completed an operations assessment for the Police and Fire Departments in the City of Orem, Utah. This assessment of both departments entailed an examination of the current staffing needs and anticipated workload increases based on community growth; a review of the feasibility of continuing to operate a public safety answering point; and a review of performance and operational data to evaluate productivity and recommend improvements, where possible. As part of this study, Citygate performed a Fire Department Standards of Coverage assessment and a Police field operations review.

> *"The assessment was **phenomenal**. We were a tough client with a command change and missing data. Citygate was **still** able to create an amazing review."*
>
> ***—Josh Adams, Chief of Police, Orem, UT***

[Houston Metro] Cy-Fair Fire Department, TX (Harris County Emergency Services District #9) – *Fire Master Plan, Community Risk Assessment, Standard of Cover, and Compliance Audit for the Cy-Fair Fire Department*

Citygate developed a Fire Master Plan for the Cy-Fair community of northwest Houston. This engagement—based on Harris County Emergency Services District #9's unique Fire and EMS fact pattern and varied risks—included a community risk assessment, a standard of cover study, and a compliance audit. The Master Plan also included the development of a strategic plan to ensure goals are actionable and categorized by priority over the long term. Summary of Outcome: The Fire District Board adopted the SOC/Master Plan and Strategic Plan and adopted a revised tax rate for the budget. There have been many positive public press reviews, and the Fire Chief was just named Fire Chief of the Year by the Texas Fire Chief's Association.

City of Oceanside, CA – *Operational and Organizational Police Department Assessment*

Citygate recently performed an independent Operational and Organizational Assessment for the City of Oceanside Police Department, affecting current, future, and long-term organizational, strategic, and operational plans. This review examined current and future service delivery, quality of service, service delivery expectations, community engagement, community priorities, Departmental organization, and staffing and deployment feasibility to maintain current and future organizational efficiency. The study also established efficiencies to ensure City, Department, and community needs are met by reviewing programming, infrastructure, operational efficiency, and fiscal impacts of associated findings and recommendations across the entire organization, and further identified planned service delivery systems

and staffing allocation models to best serve the community and achieve City Council and Department goals and objectives.

City of Berkeley, CA – *Workload Organizational Study for the Berkeley Police Department*

Citygate completed a Workload Organizational Study to assess the organizational structure, resource allocation, and geographical patrol boundaries of the Berkeley Police Department and determine whether they are adequate to provide the highest level of service within the City. The study will leveraged GIS and Citywide risk demography information obtained through our Fire Department project, explored the efficiency of the Mobile Crisis Team as a means of operational efficiency, and offered robust consideration of the Department's role and deployment related to Homeless Services. Citygate's report included future projections and goals regarding staffing, geographical boundaries, and a comprehensive, data-driven analysis of workload. Citygate's report considered how the City's growth in population and development will impact future services, with recommendations empowering the City to improve and enhance the overall safety, security, and satisfaction of City residents.

City of Woodbury, MN – *Public Safety Staffing Study*

Citygate completed a public safety staffing study for the City of Woodbury, Minnesota, which included an integrated analysis of police, fire, and emergency medical services. The police assessment involved an analysis of data related to crime, calls for service, and response times, as well an analysis of the following organizational units: Patrol Division, Investigations Division (General Investigations and Street Crimes Unit), Special Services Division, Support Services, and Administration.

> *"We looked at a lot of firms and we picked Citygate because we knew they wouldn't tell us just what we wanted to hear, but what we **needed to hear**."*
>
> ***—Lee Vague, Public Safety Director & Police Chief, Woodbury, MN***

City of Portland, OR – *Fire and Rescue Service Delivery and Staffing Study; Staffing Sufficiency Analysis*

Citygate conducted a service delivery and staffing study for Portland Fire and Rescue in the City of Portland, Oregon. Using the Standards of Coverage process, Citygate described the community served and the services provided; reviewed community outcome expectations and performance goals; conducted an analysis of community risks; and evaluated the current deployment, including fire station quantity and location, the quantity and types of apparatus, staffing levels, specialized capabilities, and first-due and ERF performance. Additionally, this study included an assessment of the needs of underrepresented and vulnerable populations and the capacity of headquarters programs to support field deployment. Upon completion of the initial study, Citygate was further retained to review the number of sworn personnel in the ranks of firefighter through Deputy Chief and identify the number of personnel needed to maintain daily response staffing. Citygate's recommendations considered absences due to various types of leave, annual attrition, and entry-level hiring/training capacity, with the goal to reduce the overtime used to "backfill" daily response staffing vacancies.

City of Surprise, AZ – *Public Safety Master Plan*

Citygate assisted the City of Surprise by developing a comprehensive Public Safety Master Plan that will enable the Police and Fire-Medical Departments to complete their organizational and programmatic goals while also aligning with the City of Surprise General Plan 2035 and City Council Strategic Plan. Citygate developed an organizational strategy that serves as a blueprint for 15-year goals for public safety but also details specific, three-year implementation steps. To accomplish these objectives, Citygate comprehensively assessed all facets of the public safety operations including mission, goals, policies, practices, deployment, facilities, equipment, programming, organizational structure, and staffing levels.

City of San Mateo, CA – *Staffing Assessment and Organizational Analysis of the Police Department*

Citygate conducted a comprehensive Staffing Assessment and Organizational Analysis of the San Mateo Police Department. This engagement will serve to both analyze current capabilities and project future needs for the Department, with actionable recommendations and strategies provided for implementation over the next 10 years based on growth and development in the City. In forecasting the appropriate measures to sustain adequate staffing levels, Citygate's assessment will classify both immediate needs and future milestones, identifying priorities, costs associated with implementation, potential alternatives, and the consequences of inaction.

City of Lino Lakes, MN – *Operational Study of the Public Safety Department*

Citygate recently completed an operational and physical asset study of the Public Safety Department of Lino Lakes, including options for a staffing plan to meet the community's needs and expectations for fire and police services, as well as providing estimated costs. Citygate determined a more effective, efficient, and improved deployment model for service delivery, consistent with state and national best practices. Citygate's comprehensive review of the Department included analysis of organizational structure, operational functions, staffing and service levels, and Department performance to ensure the City's current and future needs are met. Empowering the Department to serve the community and reach the City's goals and objectives, Citygate's study also identified barriers to achieving desired service levels.

City of Palmdale, CA – *Law Enforcement Feasibility Study*

Citygate recently completed a law enforcement feasibility study for the City of Palmdale, CA. The study included an analysis of the City's current public safety services and programs to determine whether its current model was sustainable, whether modification of the City's current strategies and programs should be considered, and offered additional strategies the City should consider. For this engagement, Citygate administered a public survey regarding current public safety programs and satisfaction and performed an analysis which includes an examination of the City's public safety in conjunction with the Los Angeles County Sheriff's Department (LASD) service contract. Citygate identified areas of improvement for staffing non-sworn community safety programs and explored the potential for sensible, cost-effective enhancements.

City of Andover Fire and Rescue Department, KS – *Fire Protection and Paramedic Services Master Plan*

Citygate completed a comprehensive analysis of the City of Andover's fire services to develop a fire protection and paramedic services Master Plan, including a Standards of Coverage study, with strategic options for short-, mid-, and long-term service delivery. The review included an evaluation of the City's volunteer firefighting force, as the City utilizes a cadre of volunteer firefighters to respond to the fire station

for assignment during a structure fire. The review also included an assessment of the Department's administrative and headquarters functions, including responsibilities and workflow for administration, prevention, training, and EMS functions. Finally, the review included an assessment of the location, condition, and space allocation of the City's Fire Department.

Los Angeles County, CA – *After Action Review of the Woolsey Fire Incident*

Citygate assisted the Los Angeles County Office of Emergency Management in preparing a comprehensive and neutral external After-Action Review (AAR) of the Woolsey Fire Incident on behalf of the County and inclusive of the major agencies that interacted with and assisted the County during the historic event. This AAR was completed over 11 months, incorporating all the best practice elements as recommended by the California Governor's Office of Emergency Services. The County's Woolsey Task Force and Board of Supervisors unanimously accepted Citygate's Woolsey Fire AAR Final Report. The Board also passed a motion to retain Citygate for implementation support related to the report's recommendations—specifically, the development, implementation, and monitoring of an After-Action Plan (AAP). The AAP addressed each recommendation from the AAR, determined the sub-deliverables and individual tasks necessary to implement each recommendation, identified the County departments responsible for each deliverable and task, and estimated macro costs and a feasible timeline for implementation as needed by recommendation.

SECTION 5—PROJECT TEAM RESOURCES

PROPOSED TEAM ORGANIZATION

TEAM OVERVIEW
Citygate's team includes…

- ***Two Police Chiefs from Midwest agencies**, including a similarly sized suburban community*
- *A Minnesota County Sheriff and **major metro Deputy Chief***
- *Service specialists and experts to address **every study element** described in the Village's RFQ/RFP*
- ***Data scientist analytics experts** regarding CAD and crime reporting*
- *Editors and **survey technicians***
- *A Public Safety Principal who has served **agencies of all sizes**, including many in the Midwest region of the US*

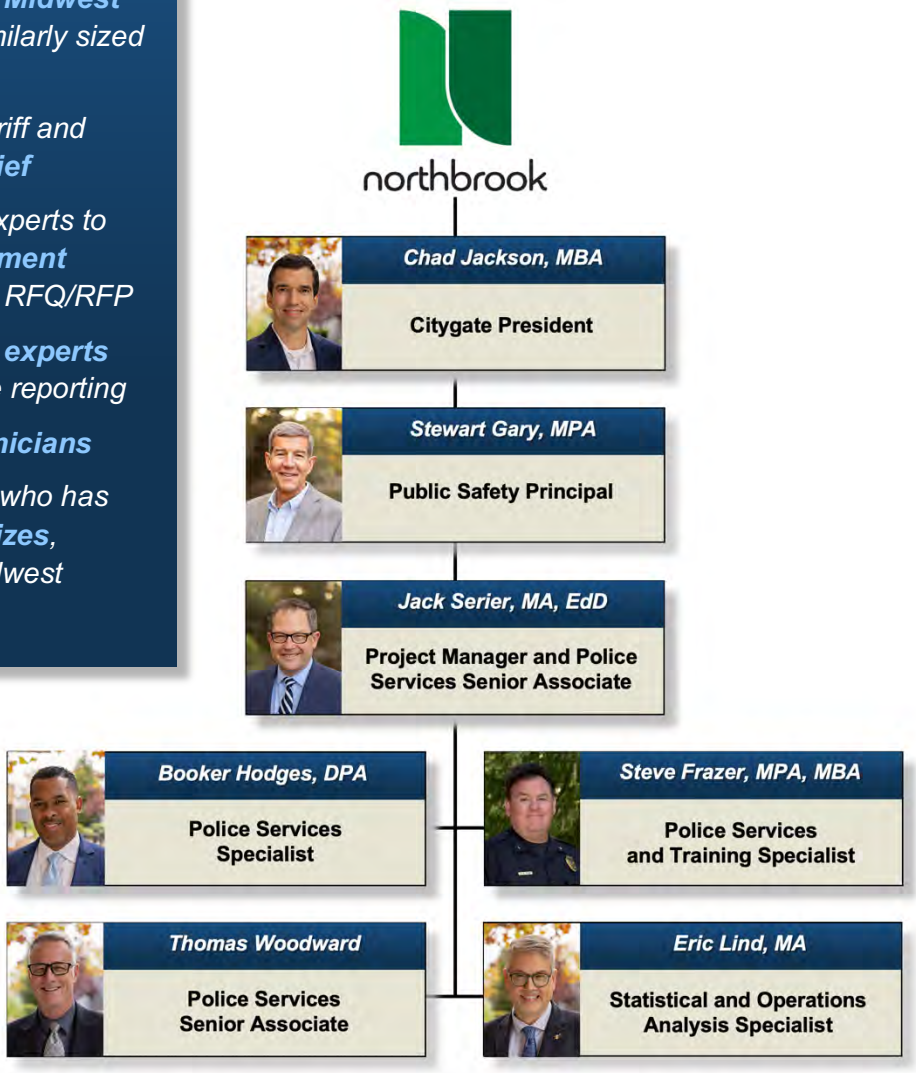

PROJECT TEAM OVERVIEW

The qualifications and expertise of the Project Team are critical in determining the outcome of the project. **Citygate has carefully assembled a Project Team of consultants from varied disciplines with more than 150 years of cumulative experience** as it relates to agency command, staffing and resource allocation, strategic deployment, public trust, statistical analysis, technology, training, use of force and de-escalation, and community listening.

With more than 150 years of cumulative experience, Citygate's **multi-disciplinary Project Team** for this engagement includes multiple police chiefs and specialists chosen for their specific strengths related to the Village's requested scope of work—as well as a statistical and data specialist to obtain and model police workload data, and Citygate's Public Safety Principal, who has led over 500 public safety studies. ***Three members of our Project Team made their careers in the Midwest.***

Our Team members have many decades of executive-level experience in Police services, with vast responsibilities related to community engagement and accountability while pursuing continuous improvement, equity, and justice—and covering a broad array of both urban and rural communities, local and county/district-level public safety, and large-scale organizational demands while meeting statewide and national best practices.

Consultants

Our Project Team includes the following experienced consultants.

> All Citygate consultants adhere to the *Code of Ethics* provided as **Appendix A**.
>
> Summary experience and biographies for each of Citygate's Project Team members are presented below, with full *Project Team Resumes* provided as **Appendix B**.

Chief Stewart Gary, MPA, Public Safety Principal



Chief Gary is the Public Safety Principal for Citygate Associates and is the retired Fire Chief of the Livermore-Pleasanton Fire Department in Alameda County, California. For 14 years, he was a lead instructor, program content developer, and consultant for the Standards of Coverage process. For many years, he annually taught a 40-hour course on this systems approach for fire deployment at the California Fire Academy, and he teaches and consults across the United States and Canada on the Standards of Coverage process. Over more than 23 years, he has performed over 500 organizational and deployment studies for diverse departments including Los Angeles County; Minneapolis, Minnesota; Long Beach, CA; Portland, OR; the City and County of San Diego, California; Monterey County, CA; Fort Worth, Texas; and the Sacramento Metropolitan District, CA. He served as Public Safety Principal for every project described in this proposal.

Chief Gary has both a bachelor's and master's degree in Public Administration from San Diego State University. He holds an associate degree in fire science from Miramar Community College in San Diego and a certificate in fire protection administration from San Diego State.

Deputy Chief Jack Serier, MA, EdD, Project Manager and Police Services Senior Associate



Dr. Serier served as a law enforcement officer for 33 years. He served in two other city police departments before joining the Saint Paul Police Department, where he rose to the rank of Commander. He then became an administrator at the Ramsey County Sheriff's Office and later became County Sheriff. As Sheriff, he was responsible for a $57 million budget and 450 employees. Most recently, he served as the Assistant Chief of Police for the Saint Paul Police Department, where he managed daily operations and was responsible for a $122 million budget. Additionally, he is the author of the 2019 Organizational Study of the Saint Paul Police Department. He has worked with government at the city, county, and state levels, as well as with federal agencies, on an array of issues as an executive, and he recently retired to focus exclusively on consulting.

Dr. Serier holds a bachelor's degree from Hamline University and earned both a master's and a doctoral degree in Leadership, Policy, and Administration from the University of Saint Thomas in Saint Paul, Minnesota. He is also a graduate of the FBI National Academy in Quantico, Virginia, and is past board chair of a regional nonprofit serving those in need of mental health services.

Dr. Serier will lead the day-to-day activities of the Project Team and be Citygate's primary point of contact throughout the project. He will be the primary author of all deliverables/reports and the primary briefer of all presentations. He will coordinate and manage all aspects of the study.

Chief Booker Hodges, DPA, Police Services Specialist



Dr. Booker Hodges is a law enforcement professional who has worked as a school resource officer, patrol deputy, narcotics detective, S.W.A.T. operator, patrol overnight watch commander, inspector, Undersheriff, Acting Chief Deputy, and Chief of Police. He has overseen Training, Human Resources, Fleet, Professional Standards, and Technology units. He currently serves as Assistant Commissioner of Law Enforcement for the Minnesota Department of Public Safety, where he is responsible for overseeing 1,400 employees and a budget over $225 million dollars, encompassing the Minnesota State Patrol, the Minnesota Bureau of Criminal Apprehension, and Minnesota Alcohol and Gambling Enforcement. Dr. Hodges spent time at the Dakota County Sheriff's Office, the Ramsey County Sheriff's Office, and the Prior Lake Police Department.

Dr. Hodges is the only active police officer in the history of the NAACP to serve as a branch president. During his five-year tenure as president of the Minneapolis NAACP, he was responsible for a landmark agreement to improve working conditions for employees of color and to diversify

the Minneapolis Park Board. During his time with the Ramsey County Sheriff's Office, he was responsible for the hiring that led to the Ramsey County Jail becoming the first minority-majority staffed correctional facility in the state of Minnesota. Dr. Hodges is also a sought-after national speaker on the topics of unconscious bias and recruiting/retention of twenty-first century workforces. Dr. Hodges earned a doctorate degree in Public Administration from Hamline University, a master's degree from Saint Mary's University, and a bachelor's degree from Florida Southern College. His experience in community relations and law enforcement is unique and has given him a dual perspective on current events surrounding the law enforcement profession. He is also an Adjunct Professor at Northwestern University in Saint Paul, Minnesota, and President of the Northstar Chapter of the National Organization of Black Law Enforcement Executives.

Chief Steve Frazer, MPA, MBA, Police Services and Training Specialist



Chief Frazer has worked in law enforcement for 36 years. He recently retired as the Chief of Police for the City of Prior Lake (population approximately 28,000), which provides police services for the city and the Shakopee Mdewakanton Sioux Community and had served in this role for three years. The majority of Chief Frazer's career was spent with the Saint Paul Police Department, where he rose to the rank of Senior Commander. He has also served as the Chief Deputy for the Ramsey County Sheriff Office. In his role as Chief, he worked with tribal leadership to bring relationships and day-to-day operations to new levels of trust and efficiency. Chief Frazer has extensive operational, investigative, and labor relations experience and developed the training and tactics for crowd management utilized regionally. He was responsible for the development of training for The Blueprint for Safety program for the Saint Paul Police Department. This program works to coordinate police, advocate, court, judicial, and correctional responses to domestic violence.

Chief Frazer is a sought-after trainer and expert witness in many areas of police operations and training. He has a bachelor's degree in law enforcement from Saint Mary's University, a master's degree in business administration from Saint Mary's University, and a master's degree in public administration from University of Virginia. Chief Frazer is also a graduate of the FBI National Academy in Quantico, Virginia.

Thomas Woodward, Police Services Senior Associate



Mr. Woodward has 25 years of law enforcement experience serving in a variety of positions with the Arizona Department of Public Safety (DPS) and the Arizona High Intensity Drug Trafficking Area. The unique nature of the Arizona DPS role in law enforcement throughout the state gave him valuable experience in working closely with agencies of all sizes and jurisdictions, including large and small municipalities, remote and urban counties, tribal agencies, and a variety of federal agencies. Mr. Woodward has patrol experience in both remote and urban areas at ranks ranging from officer to commander. Other areas of his experience include human resources, media relations, and legislative testimony. After retiring from Arizona DPS as Commander of Highway Patrol operations on the Phoenix metropolitan freeway system in 2010, he accepted a position as Training Director for the Arizona High Intensity Drug Trafficking Area. As a training director, he ran a dynamic training program, with classes attended by both sworn and civilian law enforcement personnel from throughout the country. These classes were recognized by the Arizona Peace Officer Standards and Training Board, Northern Arizona University, and Wayland Baptist University.

Commander Woodward has a bachelor's degree in Business Management and is a graduate of the Federal Bureau of Investigation National Academy and the Police Traffic Management course at the Institute of Police Management and Training.

Eric Lind, MA, Statistical and Operational Analysis Specialist



Mr. Lind's approximately 20 years of experience spans several industries, including two years in municipal government as a performance improvement analyst. His municipal government experience has largely focused on public safety performance improvement projects. He has developed baseline system-wide EMS response time capability and testing alternative models, reviewed medical priority dispatch systems and dispatch priorities for EMS systems, and improved Public Safety dispatch process flow. He has also performed an administrative performance assessment of civilian police staff, a fire facilities location study, and alternative fire service delivery modeling. Mr. Lind has used performance improvement and business transformation techniques throughout his career across the globe. He is skilled with developing and conducting statistical research to answer operations questions and equally comfortable with survey research. He has two published survey research papers, including one he developed for Rotary International.

Mr. Lind is a Lean Six Sigma Certified Black Belt and has a bachelor's and two master's degrees in International Business, each from a different country.

Chad Jackson, MBA, Citygate President



Mr. Jackson is Citygate's President and has approximately 20 years of experience in local government consulting. Having previously served as Citygate's Vice President, Mr. Jackson has served over 500 clients since joining Citygate, and has provided leadership to all aspects of the firm's operations for over a decade. Mr. Jackson is passionate about supporting and empowering local government leaders, with a focus on building executive-level consulting teams that are driven to tackle the most complex issues and challenges across every local government function. Proficient in all aspects of Citygate's many service lines to cities, counties, and districts—as well as their diverse organizational cultures—he is also a certified MERIT Profile consultant and trainer, specializing in helping organizations connect their values and culture to key recruitment decisions.

Mr. Jackson earned his master's degree in business administration from the University of California, Davis, with a focus on organizational management and entrepreneurship. He earned his bachelor's degree in communication studies from California State University, Sacramento.

For all of Citygate's engagements, Mr. Jackson is responsible for ensuring the project is conducted smoothly and efficiently within the schedule and budget allocated, and that project deliverables meet Citygate's and the client's quality standards.

Citygate's Project Interest – Public Service…

*The challenges facing the Department exceed what can be managed by a less experienced team. We are not just researchers and academics. We are senior police executives and analysts committed to public service—**rooted in real needs and real economics**. This continues to be our motivation.*

*Our Project Team has the depth of experience to communicate the project results in a way that **all stakeholders can understand**.*

*A project cannot succeed with just great data. **The story has to be told in a compelling way** to provide clarity and build momentum toward major policy decisions and needed change.*

SECTION 6—PROJECT TIMEFRAME

PROJECT SCHEDULE

Citygate anticipates this project will span approximately **six (6) months**. Due to the sensitive and complex nature of evaluating law enforcement services, staffing, culture, and operations—as well as obtaining and analyzing complete and sound data, involving varied stakeholders, and accurately costing recommendations—*this assessment must be completed correctly the first time*. The following project timeline shows the completion time per task and key milestones and deliverables throughout the engagement.

Proposed Project Schedule

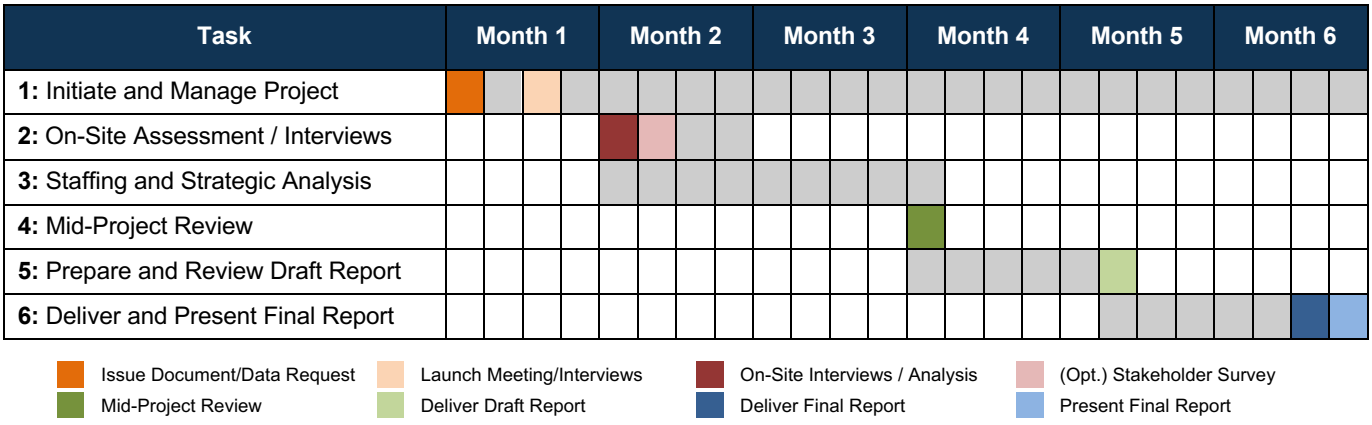

PROJECT MANAGEMENT

We provide **monthly written status reports** that describe work performed in the prior month, work planned for the upcoming month, a summary of all costs incurred, and any potential issues related to the engagement. This allows us to proactively manage projects and minimizes the need for, and impact of, project scope changes.

Citygate conducts projects on time and on budget. We realistically assess the demands of a project from its inception, carefully considering every element of the desired scope of work so that your agency receives the level of analysis required. We can budget with intentionality and in granular detail when we first propose.

SECTION 7—APPROACH AND METHODOLOGY

PROJECT UNDERSTANDING

Citygate understands that the Village desires a **comprehensive and objective assessment of the staffing needs of the Department**, including analysis of dedicated and undedicated time for patrol officers, current service delivery models, and the Department's organizational structure. The Village is seeking a report that will guide policymakers and the Department in prioritizing appropriate staffing levels and the services currently provided while strategically planning for the future—honoring the Department's core values of integrity, pride, and quality of service.

Citygate also understands that the Village has experienced an evolving residential population and significant commercial development growth over the last twenty years, with a resultant increase in service demand. In this same period, service levels and configurations for patrol zones have not been significantly adjusted, resulting in "unbalanced and overburdened" patrol zones and less capacity within the Department to address population changes and increases in workload.

Citygate's analysis will provide a blueprint for the Department to maximize efficiency and use of its personnel and resources—identifying planned service delivery systems and staffing levels which best empower the Department to ensure adequate service levels, improve operational effectiveness, and achieve the goals outlined through strategic initiatives.

> One of the keys to success in the rapidly changing environment of policing in the modern era is flexibility. An understanding not only of which sworn positions are needed, but also of which current functions and roles could be served by professional, non-sworn personnel is crucial to effective staffing at a time when (1) many sworn positions go unfilled and (2) sworn personnel are working large amounts of overtime, experiencing burnout and decreased morale, and facing other challenges.
>
> Therefore, to safeguard sworn response capacity and quality service delivery, **thorough evaluation of the positions and functions that would benefit from restructuring and/or the efficient utilization of non-sworn positions** will also play an important role in Citygate's analysis.

PROJECT APPROACH

Citygate's project approach is consistent with our Project Team members' experience in public safety administration, as well as best practice standards and guidelines. As recent practicing professionals in public administration with experience in all aspects of public safety services, our seasoned team provides the necessary frontline experience to meet Village and Department goals.

Citygate's work will be independent, meeting the Village's unique needs, while using nationally recognized guidelines and best practices, federal and state mandates, and relevant local and regional policies and operating procedures, as appropriate. Our comprehensive work will provide the foundation for future Department planning relative to the provision of public safety infrastructure and services.

A significant portion of Citygate's core scope of work is rooted in our police **workload analysis**, by which our Project Team will assess current and emergent services, as well as the Department's current performance related to such services. In addition to conducting a data-driven assessment of field services deployment, all aspects of Citygate's review will incorporate **relevant, measurable Department and Village data** to enhance the Department's capacity to provide the highest level of law enforcement services possible within the context of the Village's resources and infrastructure. Citygate will provide strategic organizational priorities to guide future growth and development, operating and capital budgets, and other financial and operating commitments.

The study will be performed in accordance with the **most ideal metrics and benchmarks** specific to the Village's context and other variables, and will be based on generally accepted **standards and best practices** related to modern-day police services in the United States. Citygate's recommendations will enable the Village to improve and enhance Department culture and operations—as well as the overall safety, security, and satisfaction of Village residents.

HIGHLIGHTS OF OUR APPROACH…

- *We know that **no single measure** (listening, documents, or data) tells the entire story*
- *360-degree **listening is essential**, and is tailored to each audience*
- *We listen carefully, compare what is heard to data, and **work closely with the agency** to close gaps*
- *We provide ongoing communication, including **monthly status reports***
- *Recommendations will be **regulatory compliant and feasible** given your culture and fiscal constraints*
- *We will look **beyond CAD data** to learn of other operational demands that consume staff time (jail delays, prisoner transportation, State's Attorney caseload etc.)*
- ***"Quick win" recommendations** will be identified early in the study*
- *When listening and data align but the results are surprising, we will spend the time with the client to **reach understanding***

Citygate understands the deployment and staffing challenges facing many police agencies today, with the **recruitment and retention** of quality personnel being the number one challenge facing local government agencies of all types throughout the country. Accordingly, Citygate will provide relevant analysis related to service areas in which the Village might consider **alternative response methods** to a sworn police officer response. We have helped many agencies to understand and

implement such alternatives—after a careful analysis of calls for service and other work demands, including ancillary duties and other activities that take officers away from their core functions. When completed, our collaborative analysis will position the Department and Village for success, supporting effective and efficient police services well into the future.

Value and Use of Data

Citygate's approach to all projects is *data driven*. We excel at mining agency incident and programs data along with analyzing the socioeconomic and demographic metrics of the communities we serve. A neutral, best practice-based public safety evaluation must be grounded in data—not personal opinions or hearsay. Metrics help to focus the conversation on what is really occurring and open doors to enhanced listening by all project stakeholders.

For analysis, we not only utilize the expertise of our public safety team members, but also of highly trained statisticians—including analysts who work full-time with statistics and are not married to the "police view" of the world, but who follow the data trends as they are presented.

Because of our **commitment to meaningful, fact-based analysis**, Citygate understands how to:

- Assess the **accuracy and reliability** of data
- Determine the **relevance** of data in correlation to decision-making processes
- Convert insights into **actionable content**
- Structure actionable content for **optimal usability** without additional work for the client

Approach to Community Engagement

Citygate has significant experience working with internal and external stakeholders, community groups, and police advisory and review boards. This experience and recognition of value allows the establishment of building and maintaining trust, confidence, and support in policing. Citygate has also conducted hundreds of surveys, focus groups, and public forums for local government agencies since our establishment in 1990.

Citygate is aware that the Village is undertaking a Strategic Planning process and in order to avoid duplicative professional services, Citygate will coordinate with the Village and its Strategic Planning consultant on the public survey / public forum processes that will be conducted under that professional services agreement with data to be made available for use in this study by Citygate.

All of our Project Team members have the technical skills to conduct themselves as active, caring listeners along with the technical savvy to use videoconference tools such as Zoom, Microsoft Teams, and other internet-based collaboration methods. We have significant experience gathering multiple forms of stakeholder input, and can see trends and themes develop through various forms of feedback.

PROJECT METHODOLOGY

Efficient and effective police services support continued efforts to reduce crime, reduce the fear of crime, respond to all types of public safety calls for service, and maintain the highest levels of community partnerships and engagement. As such, Citygate's assessment and implementation plan will classify both immediate needs and future milestones, identifying priorities, potential alternatives, and the consequences of inaction.

Our commitment to active listening and collaboration with your community allows us to provide practical and implementable recommendations for the Department to thrive in the evolving environment of policing. You can trust us to personally meet with your staff, develop genuine relationships, and listen with the specific goal of learning not only what they do, but how they do it. After developing a sufficiently informed foundation of knowledge of the Department and completing a thorough analysis of data and all relevant reports, procedures, and practices, Citygate will offer recommendations that are implementable and tailored to the Department's unique situation.

COPS™ Adaptive Methodology

At Citygate, we strongly value our independence, as we believe it provides a significant benefit to both our analyses and our clients. Because we are not bound to any particular standards-setting organization—nor beholden to an exclusive methodological framework—we are free to choose from a variety of potential options based on what will be most effective for your agency.

> There is no "one-size-fits-all" formula to address police agency staffing, utilization, deployment performance metrics, etc. Thus, to accurately assess your specific agency and provide coordinated best practice standards and recommendations that are attuned to your unique needs, we utilize the Citygate Operational Policing Strategy (COPS) analysis model. **COPS is an *adaptive* methodology by which Citygate chooses best practices and benchmarks from a matrix of options** based on the local context, culture, values, and scale of your agency.

Having assessed your community's unique local context and fact pattern, Citygate will connect the Department's performance to metrics and standards found in the published work of the International City/County Management Association (ICMA), the International Association of Chiefs of Police (IACP), the Police Executive Research Forum (PERF), the National Policing Institute (NPI), and other standards-setting organizations and scholars to ensure our coaching and recommendations best fit your specific policing model and needs.

Data-Driven and Fact-Based Analysis

Citygate utilizes Microsoft Power BI as an analysis tool, and our trained statisticians provide local government agencies with historical and up-to-date analytics related to Computer-Aided Dispatch

(CAD) data—ensuring a better understanding of the agency's response, time management, deployment, and geographical information.

In building a targeted toolset from a matrix of analytical tools, the COPS™ adaptive methodology provides a state-of-the-art assessment of analytics, organizational systems, staffing, culture, and stakeholder expectations to ensure that local government public safety agencies receive the value they are looking for.

For this review, Citygate will use Power BI to analyze the "average committed time per hour" and "average Patrol units committed" to determine a per-hour **utilization rate** for predictive purposes. This means of analysis enables Citygate to simulate the *incremental addition of personnel* to demonstrate potential changes in workload utilization. Citygate applies this data-informed, predictive analysis to make the most specific staffing and scheduling recommendations, by time of day and day of week. This ensures that even agencies that are experiencing difficulties in the recruitment and retention of authorized, sworn staff can benefit from targeted realignments in scheduling and coverage, where applicable.

A small example of our workload and utilization analysis can be seen in the following figure.

Figure— Example Workload Utilization Analysis

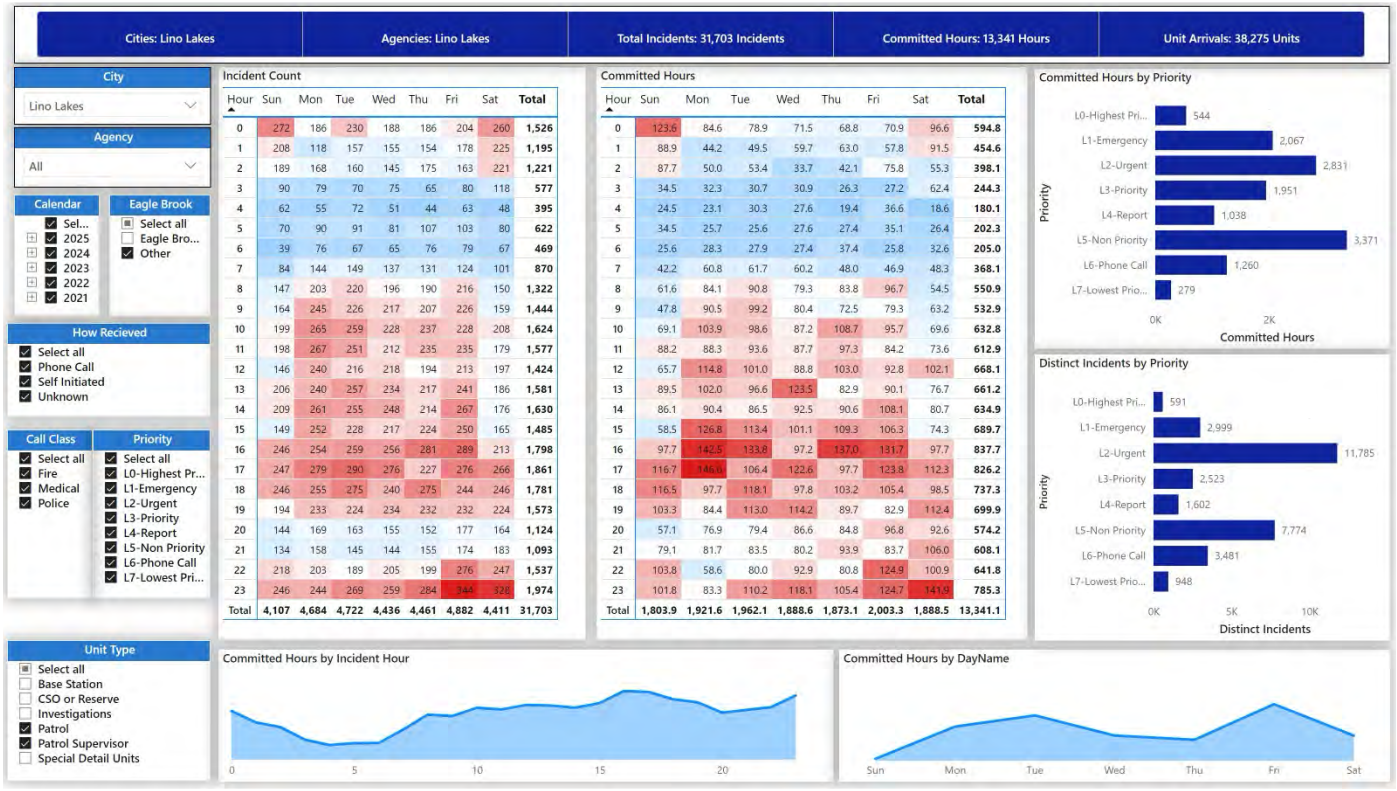

For a recent client, Citygate demonstrated the need for an additional Patrol officer to address the increasing volume of calls for service experienced by the agency. *The following figure* illustrates

the agency's strained Patrol utilization at the time of Citygate's analysis, with Patrol saturation visible in time blocks exceeding the recommended 60 percent utilization threshold.

Figure—Patrol Utilization for Engaged Units

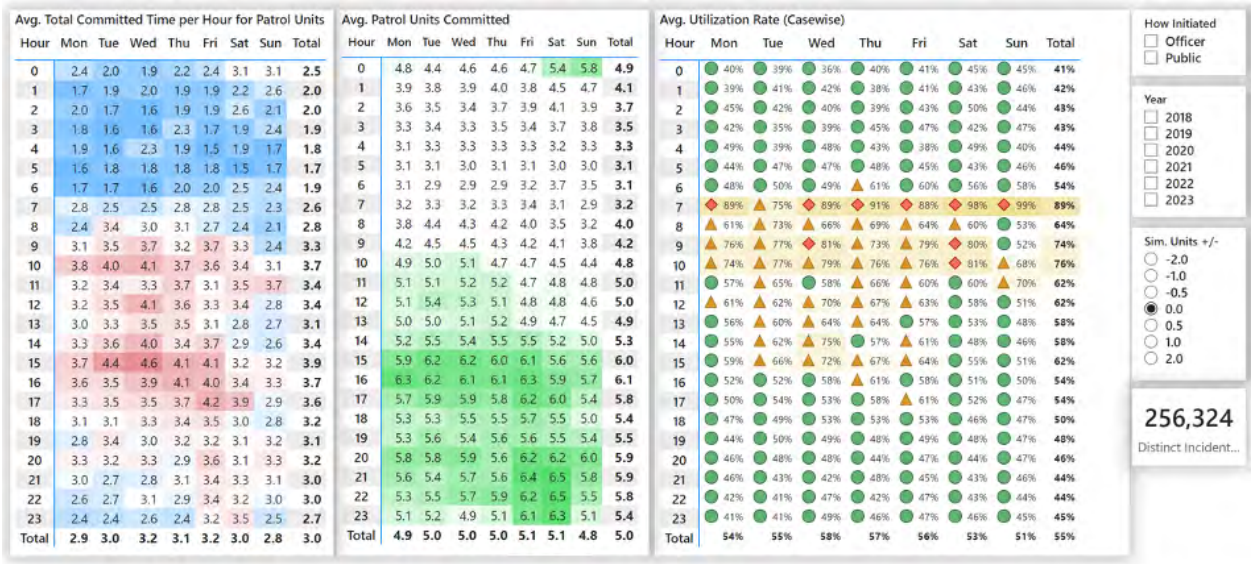

As shown in the next figure, Citygate found that an optimal utilization rate could be achieved during oversaturated hours by the addition of just one officer to the agency's day shift. Citygate simulated the significant, positive impact to Patrol utilization that could be expected via this addition.

Figure—Patrol Staffing Simulation: +1 Engaged Units

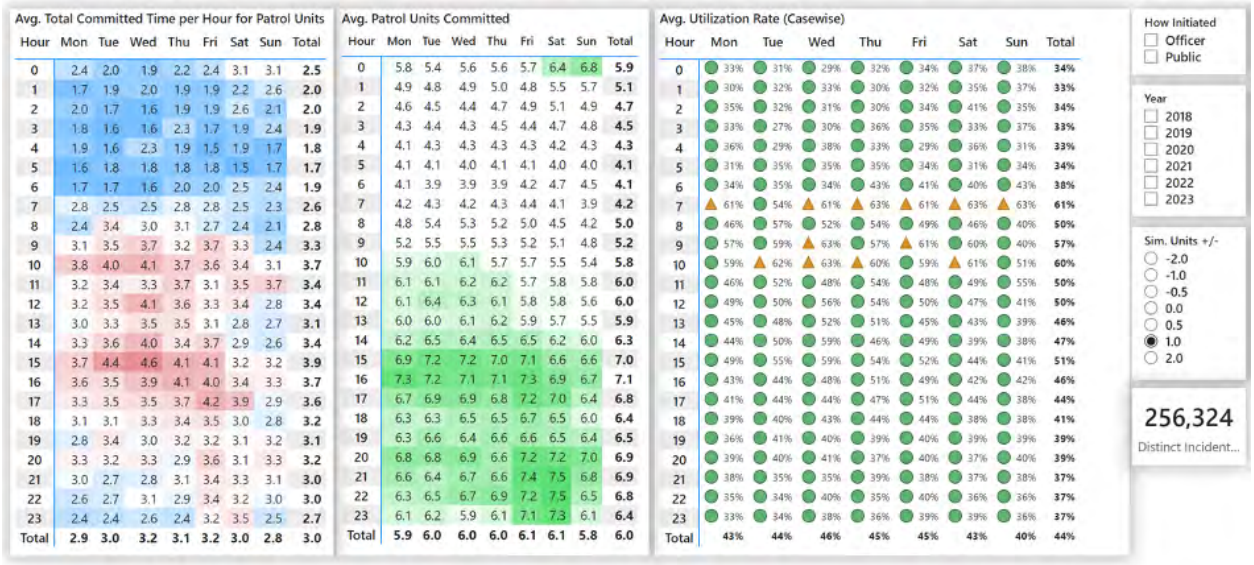

Examples such as these are why, if selected for this important project, the Village can be confident that **Citygate's findings and recommendations will be thoughtful and leading-edge**—positioning the Village and Department to achieve quantitative results. Our approach and analysis will be based on the Village's specific context to ensure a relevant and actionable outcome. Citygate does not provide broad or general recommendations. We will demonstrate enhancements and improvements at the most specific level.

Through our COPS adaptive methodology, Citygate's Project Team will work with you to develop specialized strategies which position the Department and Village for success in achieving a better future for the agency and community.

> *"As an industry leader… Citygate was the only firm to demonstrate sufficient, **relevant experience**, to clearly articulate the ability to provide community **stakeholder outreach**, and to meet the **technical expertise** standards required.*
>
> ***—City of Santa Monica, Letter to Staff***

PROPOSED PROJECT WORK PLAN

For this Police Department Staffing and Organizational Plan, Citygate's Work Plan fully addresses each scope of work element as described in the Village's RFQ/RFP. Our proposed Work Plan is comprised of **six (6) tasks** as follows.

Task 1: Initiate and Manage the Project

1.1 Develop detailed Work Plan schedule for the project

- We will develop a detailed, integrated work schedule and final project timeline. These tools will assist both the consultants and Village staff in monitoring the progress of the study.

1.2 Conduct an on-site project kick-off meeting with Village and Department representatives to initiate study

- A key to a successful consulting engagement is a mutual understanding of the project's scope and objectives. The senior members of our Project Team will conduct a virtual meeting with Department project representatives to introduce team members, discuss the project schedule, and review the scope of work and available data. Citygate will prepare the agenda.

1.3 Obtain and review City/Department documentation

- We will develop and submit a list of all documents relevant to this project, including the Village's General Plan; growth forecasts; any appropriate prior studies; Department documentation; dispatch data, including a distribution of calls for service by hour of day, day of week, and month; the number and assignments of current personnel; operating costs; and other information.

1.4 Provide monthly status reports

- Throughout the entire project duration, we will monitor engagement progress and completion of tasks, including providing monthly status reports and oral communications, as needed, to the Department's project coordinator, including a summary of all costs incurred and work performed by the Project Team during the period.

Meetings

Citygate anticipates one on-site meeting with members of Citygate's Project Team and the Department to initiate the project.

Task 2: On-Site Assessment / Stakeholder Interviews

2.1 Conduct an on-site assessment of Department services

- To enhance our understanding of the issues at stake in this project, we will conduct interviews on-site as appropriate and directed with the Chief of Police, key members of the Department's command staff, and other key positions as desired.

2.2 Conduct interviews with Department, City, and Police Officers Association leadership teams

- To continue to enhance our understanding of the issues at stake in this project, we will interview, as appropriate and directed, command staff, managers, supervisors, and officers in-charge of the Department's divisions and others responsible for the various units of the Department; and members of Village staff who frequently interact with or have an interdependent relationship with the Department.
- Citygate recognizes the importance of professional staff to the overall public safety mission of the Department. As such, we believe it is important to conduct interviews with professional staff including, but not limited to, dispatch, records, clerical staff, and volunteer chaplains to understand their perspectives.
- We will solicit Department membership input from both sworn and professional staff.

2.3 Issue SWOT (Strengths, Weaknesses, Opportunities, and Threats) questionnaire

- We will assess Department member perceptions and expectations of Department services by issuing SWOT questionnaires to personnel and, as appropriate, other agency employees that interact with the Department to obtain perceptions of the Department and how it is or is not meeting needs.

2.4 Identify community expectations for the Department by conducting meetings with key municipal stakeholders

- Citygate will conduct in-depth interviews with the select members of the public, senior Village staff (Village Manager and Department Directors), and other key stakeholders to better understand community expectations related to the Department and police services.
- Citygate will coordinate with the Village and its Strategic Planning consultant on the public survey / public forum processes that will be conducted under that professional services agreement with data to be made available for use in this study by Citygate.

Meetings

Citygate anticipates one on-site trip for three days with multiple consultants to interview key stakeholders, carry out necessary location visits within the Village, and conduct other elements of on-site assessment.

Task 3: Conduct Staffing and Strategic Analysis

Citygate's Work Plan to follow considers all elements of the Village's required project specifications.

3.1 Conduct a complete review of the Department's organizational structure, culture, and functions

- We will begin our deployment review with an assessment of community risks and vulnerabilities, including infrastructure, demographics, pattern (organized) and random crime activity, regional anomalies, and public venues (including entertainment).
- We will examine the Department's organizational structure and functions and review and analyze management and supervisory scope of responsibilities.
- We will analyze key management and staff workload, staff development, administrative responsibilities, succession planning, risk management practices, technology, functional assignments, and organizational structure efficacy.

- We will review and analyze available data relative to public-generated calls for service, officer-initiated activity, incident response statistics to measure the effectiveness to desired goals, response time criteria, call prioritization relative to the current deployment plan, review and analysis of Department divisions and units, workload balance analysis, and staffing allocation analysis.

3.2 Perform a detailed operational review of core Department functions and workflow processes for each area

- We will analyze reporting relationships to ensure adequate span of control, assess the distribution of resources in each division/unit, and examine the current methodology in responding to calls for service throughout the Village, and review staff retention and attrition, the adequacy of staff training and experience, and the adequacy of staffing levels based on current and projected workloads.
- We will identify practical opportunities for collaboration and formal partnerships consistent with the strategic priorities of the Village and the Department.
- We will review best practices regarding community-oriented policing and problem solving, intelligence-led policing, and data-driven policing to provide options for the best fit for the Village.

3.3 Assess the geographical factors impacting response within the service area

- Citygate will assess the Village's current geographical configuration and context to recommend the optimal quantity and configurations of police zones/beats. For this element of assessment, Citygate will consider:
  - Changes and variance in the population during the day versus evening hours.
  - Obstacles impacting response to calls for service, such as impassable train crossings.
  - The most efficient response times achievable within the topography and layout of the service area.
  - Significant changes to commercial and residential developments and future growth, such as the Northbrook Court redevelopment project.

3.4 Perform a review of benchmark data from other comparison agencies

- Citygate will establish several benchmark measurements with similarly situated municipal police agencies, seeking Department input as to which agencies the Department typically compares itself with. For benchmark analysis, we will utilize geographical, population, crime rate, and fiscal metrics to compare agency staffing per capita, rank structure, crime per capita, and policing costs per agency.

3.5 Evaluate current staffing levels against service demands, including peak and off-peak periods

- Using empirical and objective methods, Citygate will identify efficient staffing levels, minimum staffing levels in relation to current service demand, and metric "trigger points" for determining the need for additional staffing.
- Using empirical and objective methods, Citygate will develop strategic organizational priorities as they relate to current and recommended services and service levels.
- Based on our evaluation of the Department's organizational structure, Citygate will provide recommendations regarding supervisory and command staff as population and operational staff increase.

3.6 Analyze the Department's rank structure and related staffing levels for patrol supervisory and specialized units

3.7 Assess the current allocation of staff (both sworn and professional/non-sworn) to various units and functions

3.8 Conduct a data-driven analysis to identify the Department's actual workload

- Developing comprehensive strategies to improve Departmental efficiency and effectiveness, utilizing levels of demand for police services and supply of police resources including but not limited to staff utilization, calls for service, crime rate, workload, deployment strategies, standby utilization, unobligated time vs. obligated time, training schedules, community engagement, and other operational commitments.
- Assess current shift schedules/length, and how they affect utilization and deployment.
- Identify services that may be added, eliminated, combined, or reassigned to provide appropriate levels of service for the Village.
- Potential impacts on overtime and officer burnout.

3.9 Assess service demands, levels, and standards

- Citygate will assess and evaluate current and future service demands, service levels, and standards for service delivery, including but not limited to staffing (including support staff), equipment needs, and crime prevention. We will:
  - Review minimum staffing requirements in patrol (i.e., officers and supervisor minimums per shift).
  - Review supervisor to officer ratios.

- Review potential personnel realignments and new roles.
- Consider supervisory oversight assignments and workload.
- Evaluate new demands of body-worn camera management and Freedom of Information Act requests.
- Analyze mandatory training, equipment, and procedural requirements resulting from mandates such as the Safe-T Act.
- Review current Departmental statistics related to follow-up case assignments in Patrol, the CIT Unit, the Investigations Unit, and the Counseling Services Unit to assess current levels of service and future enhancements.

3.10 Perform cost/fiscal analysis

- Citygate will coordinate with the Village Manager and Village Chief Financial Officer to develop cost estimates for any recommended increases/decreases in staffing.
  - We will perform a high-level review of current financial resources and evaluate options to provide additional, sustainable long-term resources that can be dedicated to support the alternatives presented.
  - Citygate will prepare staffing recommendations with an understanding that they will be reviewed by the Village with the Architect (FGM) who presented the study adopted by the Village Board.

Meetings

Citygate anticipates the potential for multiple follow-up phone and/or videoconference meetings with staff, as needed.

Task 4: Conduct Mid-Project Review

4.1 Conduct a Mid-Project Review with key staff as determined by the Department/City

- We will utilize a Microsoft PowerPoint presentation to review the preliminary findings and proposed recommendations of the study with members of Citygate's Project Team, the Village Manager, and Department administration. This will also provide an opportunity for the Department and consultants to perform fact-checks and make any necessary mid-course corrections before Citygate's recommendations are finalized. Citygate values transparency and maintains an ethic of "no surprises" where our reports are concerned. This is another reason we place a high value on performing a Mid-Project Review.

Meetings

Citygate anticipates one virtual meeting via videoconference for this task. *If desired by the Village,* Citygate can amend the project scope and budget for this meeting to be held on-site.

Task 5: Prepare and Review Draft Report

5.1 Prepare Draft Report

Citygate's entire Project Team will prepare a **Draft Report (including an Implementation Plan)** for review by the Department. In the Draft Report, *in addition to all previously discussed analysis content*, Citygate will:

- Identify and recommend best practices, management and supervisory to staffing ratios, organizational needs, and performance measures for the Department.
- Recommend an optimal organizational model for the Village based on comparison with like-sized municipal police departments. This recommendation should include an optimal performance model as well as a model based on available budget, staffing, and stakeholder expectations (as applicable).
- Provide recommendations for streamlining procedures and processes for Department functions.
- Identify cost-saving technologies to support current and future programs and operations.
- Provide training recommendations to improve operations and support succession planning.
- Based on workload and other relevant factors, identify and recommend appropriate staffing and deployment levels—both current and future—for every discrete operational and support function in the Department.
- Make recommendations for alternative methods to provide police services including the utilization of professional staff and enhancing efficiencies.
- Recommend a management framework to ensure accountability, increased efficiency, and improved performance.

5.2 Review Draft Report

Citygate's normal practice is to review the Draft Report with management personnel to ensure the factual basis of our recommendations and allow time for a thorough review. In addition, Citygate takes time to discuss any areas that require further clarification or amplification. It is during this period that understandings beyond the written text can be communicated.

- Upon completion of the Draft Report, an electronic version in Microsoft Word format will be sent to the Department's Chief of Police and other relevant stakeholders for Department/Village review using the "track changes" and "insert comment" tools in Microsoft Word.
- Citygate will facilitate a videoconference review of the Draft Report with the Chief of Police and other relevant stakeholders identified by the Department/Village.

Meetings

Citygate anticipates one virtual meeting via videoconference with members of Citygate's Project Team, senior members of the Department, and the Village Manager's Office to review the Draft Report.

Task 6: Deliver and Present Final Report

6.1 Prepare and deliver Final Report

The process of Final Report preparation is an important one. Implicit in this process is the need for a sound understanding of how the review was conducted, what issues were identified, why the recommendations were made, and how implementation should be accomplished.

Based on the results of our Draft Report review process, Citygate will then prepare and deliver a Final Report to the Village with sufficient information for policy decisions addressing operational and service options. Our Final Report will emphasize implementation and include helpful tables and visual aids for the Department to monitor progress. As appropriate, specific recommendations will be presented in tabular form—with each followed by a priority ranking of its importance and/or a designation of its place within an actionable timetable, as well as identification of any associated fiscal impact, with other information and organization provided as needed or applicable.

Included with our Final Report (at no additional cost to the Village) will be Citygate's brand-new report module: ***Staffing Innovations for Recruitment and Retention***. This cutting-edge resource for navigating staffing challenges within modern local government agencies has been meticulously researched and edited by key Citygate consultants and is full of numerous practical ideas and examples of successful implementation to generate creative solutions and maximize the impact of your agency's staffing initiatives.

The recruitment and retention of quality personnel is the **number one challenge facing local government agencies** throughout the country, and Citygate's aim is to add value to each of our reports accordingly—empowering every agency we partner with to succeed. This new resource will be tailored to your agency and was designed to help change occur where it may seem impossible.

6.2 Present Final Report

A Final Report Presentation will be delivered on-site by members of our core Project Team to the Department's command staff and the Village Board of Trustees.

- Citygate will present key elements of the Final Report using Microsoft PowerPoint to include: a summary of the nature of the report, the methods of analysis, and the report's primary findings and critical recommendations; a review and explanation of primary supportive charts, graphs, diagrams, and maps, where appropriate; and opportunity for questions and answers.
- All presentation materials, files, graphics, and written materials will be provided to the Village at the conclusion of the presentation.

Meetings

Citygate anticipates one on-site meeting with members of Citygate's Project Team and an audience chosen by the Department/Village.

STUDY COMPONENTS WITH WHICH THE DEPARTMENT MUST ASSIST

Department personnel have the best capability to collect much of the required data that can assist Citygate's study. Therefore, the Department will assist Citygate by:

- Providing data and documents describing the organization, services, performance measures, and other information as requested by Citygate, as available.
- Identifying a single point of contact for this project.
- Creating an *internal Project Team* that will be a representative cross-section of key managers, line personnel, Department data analysts, and labor leadership to not only assist in informing Citygate's understanding of the Department, but also to be coached by Citygate in learning state-of-the-art deployment and planning methods and tools.

SECTION 8—COST PROPOSAL

PROJECT COST

Our charges are based on *actual time* spent by our consultants at their established billing rates, plus reimbursable expenses incurred in conjunction with on-site travel (initial assessment, Mid-Project Briefing, Final Presentation); as well as printing, clerical, and support services related to the engagement. We will undertake this study for a **"not-to-exceed" total cost** based on our Work Plan and Scope of Work, outlined below.

Core Project Cost

Project Team Consulting Fees	Reimbursable Expenses	Administration (7.5% of Hourly Fees)	Total Citygate Project Amount
$86,325	$6,709	$6,474	**$99,508**

PLEASE NOTE: This cost proposal reflects our best effort to be responsive to the Village's needs for this study at a reasonable cost. If our proposed scope of work and/or costs are not in alignment with Village needs or expectations, we are open to discussing modification of our proposed scope of work and associated costs.

Hourly Rates

Classification	Rate	Consultant
Citygate President	$260 per hour	Chad Jackson
Public Safety Principal	$260 per hour	Stewart Gary
Police Services Senior Associate, Project Manager	$195 per hour	Jack Serier
Police Services Specialist	$195 per hour	Booker Hodges
Police Services and Training Specialist	$195 per hour	Steve Frazer
Police Services Senior Associate	$195 per hour	Tom Woodward
Workload Staffing and Operational Analysis Specialist	$195 per hour	Eric Lind
Report Project Administrator	$140 per hour	Various
Administrative Support	$100 per hour	Various

BILLING SCHEDULE AND OPTIONS

Citygate offers **two payment schedule options** to meet the Village's needs:

One method is a **monthly fee of $16,584.67 across the six-month project schedule, for a total cost of $99,508**, which creates clarity and predictability for the Village. The first monthly invoice would be issued upon contract execution.

The other approach is a **time-and-materials monthly billing schedule up to the not-to-exceed cost of $99,508**, including a 10 percent (10%) project advance that would be credited to our last invoice. Either billing method includes the first invoice being sent upon execution of the contract.

Our invoices are payable within thirty (30) days. Citygate's billing terms are net thirty (30) days plus two percent (2%) for day thirty-one (31) and two percent (2%) per month thereafter. Our practice is to send both our monthly status report and invoice electronically. If we are selected for this project, we will request the email for the appropriate recipients of the electronic documents. Hard copies of these documents will be provided only upon request. We prefer to receive payment through ACH Transfer, if available.

PRICING TERMS

This price quote is effective for two months and includes one (1) draft report review cycle as described in our Project Work Plan to be completed by Citygate and the Village within 30 calendar days of delivery of the Draft Report. Additional draft cycles or processing delays requested by the Village would be billed in addition to the contracted amount at our time and materials rates. The Draft Report will be considered final if there are no suggested changes within thirty (30) days of the delivery of the Draft Report.

SECTION 9—REFERENCES

Citygate has extensive experience deeply analyzing deployment, staffing, operations, organizational structure, workload and performance metrics, and physical assets to inform the design of phased, common-sense enhancements. Why is this experience critical? The Village is hiring an external specialist that knows how to uncover tough issues and work them to successful closure. Citygate has a proven track record of understanding the approaches needed to provide exceptional deliverables on time and on budget while effectively communicating the results of analysis to *all* project stakeholders.

In conformance with the Village's RFP/RFQ, Citygate has provided the following recent client references. More information regarding these (or other) projects is available upon request.

City of Minnetonka, MN

Comprehensive Operations and Staffing Assessment for the Police Department

Citygate performed a comprehensive operations and staffing assessment of the Police Department for the City of Minnetonka, Minnesota. This comprehensive assessment of the law enforcement services delivery system featured a review of Department functions, staffing and service levels, organizational structure, operations, and Department efficiencies to ensure current and future needs are met through efficient and effective operations. This study and final presentation were very well received. The project was coordinated with Citygate's concurrent fire services study.

***Contact**: Scott Boerboom, Chief of Police*
***Phone**: (952) 939-8551 | **Email**: sboerboom@minnetonkamn.gov*

City of La Mesa, CA

Staffing and Resource Analysis of the Police Department

Citygate recently concluded a comprehensive analysis of the staffing and resources of the La Mesa Police Department. Citygate obtained a deep understanding of the Department's staffing needs to assist the City in maintaining a safe community and providing a high level of customer service to its citizens. Citygate conducted data-driven field services deployment assessments, incorporating relevant, measurable Department and City data while providing additional insight which the City can utilize to guide future growth and development, operating and capital budgets, and other financial and operating commitments. Citygate's comprehensive work will ensure efficient and effective staffing structure and resource utilization, providing the foundation for future Department planning relative to the provision of public safety infrastructure and services.

***Contact**: Ray Sweeney, Chief of Police*
***Phone**: (619) 667-7514 | **Email**: rsweeney@cityoflamesa.us*

*"After the study was complete and presented to the City Council, we were able to add six new positions based on the recommendations of the Citygate staff. I appreciate their **professionalism and hard work** to get the detailed report to our City Council and would recommend them to anyone needing the same or similar services."*

—Ray Sweeney, Chief of Police, La Mesa (San Diego Metro), CA

City of West Sacramento, CA

Comprehensive Operations and Staffing Assessment

Citygate performed a comprehensive operations and staffing assessment for the Police Department in the City of West Sacramento, California. This assessment analyzed staffing needs and service demands to determine an optimal staffing model, appropriately considering workload, performance measures, service delivery expectations, operating budgets, community priorities, and Departmental organization.

***Contact**: Charles Meeks, Deputy Chief of Police*
***Phone**: (916) 617-4919 | **Email**: charlesm@cityofwestsacramento.org*

*"The Citygate report provided a framework for the department to reference in prioritizing our **short- and long-term planning** as it relates to, personnel growth, equipment needs, leveraging technology, policy and procedure recommendations, and a facility needs assessment."*

—Deputy Chief Charles Meeks, West Sacramento, CA

SECTION 10—OTHER INFORMATION

TARGETED QUESTIONS AND ANSWERS FOR THIS ENGAGEMENT

What is your overall approach to conducting a staffing study?

Citygate utilizes an inductive and data-driven approach in tandem with our proprietary COPS adaptive methodology. We do not have preconceived ideas about our clients. Our job is to understand our clients and their communities through on-site engagement and data analysis while being considerate of client resources; and then to leverage our subject-matter expertise, in light of relevant industry best practices, to provide recommendations that will best serve the specific agency we are engaged with.

When a study is focused on staffing, we understand that our responsibility is not simply to recommend new positions. The recruitment and retention of personnel is the single greatest challenge facing most agencies today. Because of this, we thoroughly assess which roles and functions can benefit from realignment—utilizing professional, non-sworn personnel while freeing sworn personnel to fulfill duties for which they are essential. Further, we have recently completed a new module for inclusion in our reports which offers cutting-edge staffing solutions and coaching related to finding and maintaining quality personnel.

Can you describe the methodologies you will use to assess current workload?

We use Microsoft Power BI as our data analytics platform. Our data scientists work with your agency's technology division to understand data related to calls for service, crime statistics, traffic stops, incident reports, and more. We then integrated this data with our analytical platform to create insightful tables, charts, maps, and useable statistics that can be applied to help solve your agency's challenges and build upon your current strengths.

Our Citygate Operational Policing Strategy (COPS) analysis model—described in depth in Section 1—**is an *adaptive* methodology by which Citygate chooses best practices and benchmarks from a matrix of options** based on the local context, culture, values, and scale of your agency.

How will you conduct a comprehensive analysis of the community's needs and crime patterns to inform staffing requirements?

We evaluate calls for service and priority levels against staffing capacity, beat / patrol zone structure, scheduling, response time performance, etc. With a detailed understanding of what your agency's specific crime profile indicates, we utilize tools such as the ICMA Rule of 60 (and other targeted metrics) to evaluate utilization within your agency's deployment model. It is also a standard Citygate practice to administer online community surveys and/or in-person community engagement forums/workshops to understand community needs and concerns as well as desired levels of service. We then juxtapose that context—and any significant themes which surface through such engagement efforts—with the crime statistics and service demand patterns found

through our analysis to make recommendations which honor the intersection of data, resources, and community needs we have identified.

What staffing models, including overall organization structure and shifts will you consider and why?

Citygate uses an inductive approach to our analysis. Our team has a wide variety of experience with many different models for staffing and organization and will make recommendations based on what will best serve the Department and the community it serves. Citygate will evaluate overall organizational structure with an emphasis on lines of authority and span of control to ensure the most effective and efficient reporting relationships and oversight capacity. If there are any broader organizational enhancements that we see the Department potentially benefiting from outside of the most common bureaucratic structure, we will communicate potential options to the Village. We will assess shift schedules and overlap/staggering within the Department's patrol area structure to identify improvements. Our analysis will be attentive to which roles and functions can more easily be managed by CSOs and other non-sworn personnel, ensuring sworn capacity is maximized within the Department. We will also consider broader staffing model changes from a composite metric which most benefits the Department and its unique context.

It should be noted that Citygate does not make staffing recommendations based on per-capita population measures (i.e., one officer per 1,000 residents). Rather, Citygate will utilize a data-informed *workload analysis* based primarily in calls for service and current/projected service demand. To further focus our emerging recommendations, Citygate will also employ a comparative analysis of Department staffing against that of similar agencies, benchmarking rank structure, crime rates, crime clearance rates, etc.

How will you incorporate geographical analysis of crime hot spots into your staffing recommendations?

Citygate will perform analysis at multiple levels to understand geographical "hot spots" and trends as they relate to crime patterns throughout the community. We will overlay visual findings with current deployment models, beat structure, and shift scheduling/overlap to provide enhancements and alternatives that our consultants believe best address Department needs. We will assess current operational effectiveness in view of the geographical insights gained and recommend efficiencies specific to the geographical boundaries of patrol zones based on response times, workload, and resource deployment. Analysis of crime "hot spots" will inform whether the community is best served by a fixed beat structure or an alternative organizational deployment model—whether sector based, community oriented, temporal, or even geospatial based on predictive data.

What data collection methods will you employ?

Citygate will collect CAD data, crime data, records management system data, data from an internal enhanced SWOT survey, and comparative benchmark agency data; conduct personal interviews with staff at all levels of the agency; interview key Village staff in community development, planning, and finance; and interview key community stakeholders.

How will you ensure the accuracy and reliability of the project's deliverables?

Citygate's approach to all projects is *data driven*. We excel at mining agency incident and programs data. To ensure objectivity, we not only utilize the expertise of our public safety team members for analysis, but also that of full-time statisticians and analysts who are not married to the "police view" of the world, guaranteeing neutrality in our assessment. Second, our standard process for engagement ensures there are regular opportunities to correct errant or incomplete data:

1. Our standard Mid-Project Review provides the Department with an understanding of all initial findings and recommendations and an opportunity to perform fact-checks, provide further data, and make any necessary corrections before Citygate's recommendations are fully developed in our Draft Report.

2. Our Draft Report review phase further ensures all elements of Citygate's report are vetted for accuracy and reliability.

3. Our dedicated Project Manager for this project will be in regular communication with the Department's project manager/team and will provide monthly status reports indicating project progress and identifying any gaps in data or understanding which might impede a robust analysis.

In these ways and others, Citygate ensures the results of our analysis—and all project deliverables—are trustworthy and actionable.

How will you determine the optimal number of officers needed for each shift / patrol area?

Citygate will provide recommendations based on analysis of Department workload data, including the volume of calls for service and the Department's adopted response time goals; community expectations; and resources available to the agency. Our consultants will utilize community and Department context as well as data to make recommendations that are informed and practical.

Which analysis techniques will you use to identify trends/patterns in workload demand?

We have developed and utilize proprietary techniques within Microsoft Power BI to analyze agency data. This includes our patrol analysis—which leverages understanding of both average and *fractile* response measurement methods to assess response time to calls for service by priority, evaluate workload by call type, and visualize activity utilizing temporal tables and heat mapping to illustrate phenomena, a small example of which is included below.

The table reflects a specific call for service priority level by hour and day, with the same results plotted on a heat map to show their frequency throughout the city. In the case of this example, the data revealed that further attention was needed in retail areas and along the interstate.

Hour	Monday	Tuesday	Wednesday	Thursday	Friday	Saturday	Sunday	Total
00	87	96	91	79	100	215	221	889
01	60	71	68	76	76	175	147	673
02	54	47	45	81	51	86	70	434
03	40	51	40	59	40	62	63	355
04	46	57	50	58	56	69	43	379
05	65	63	82	46	53	52	46	407
06	83	93	84	91	100	65	53	569
07	154	168	154	147	152	110	87	972
08	221	227	214	208	226	177	124	1,397
09	266	228	237	275	250	208	150	1,614
10	303	273	269	254	262	218	211	1,790
11	298	282	277	288	289	246	195	1,875
12	291	293	333	293	283	300	229	2,022
13	332	300	310	309	298	250	249	2,048
14	299	307	311	307	351	268	252	2,095
15	389	357	326	346	391	312	270	2,391
16	357	367	352	329	335	275	258	2,273
17	321	336	309	318	357	266	259	2,166
18	313	294	302	339	313	228	235	2,024
19	275	253	260	265	282	245	224	1,804
20	213	259	249	236	265	234	211	1,667
21	177	212	231	195	275	268	198	1,556
22	246	176	165	214	347	356	167	1,671
23	111	122	127	115	263	218	130	1,086
Total	5,001	4,932	4,886	4,928	5,415	4,903	4,092	34,157

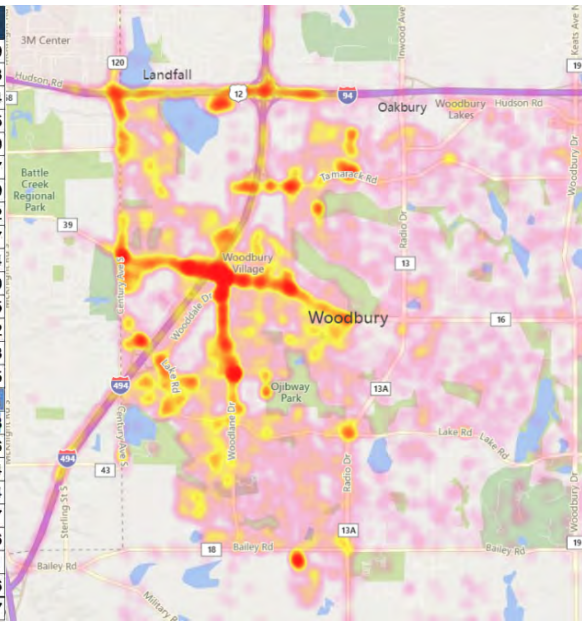

What strategies will you propose for addressing staff shortages?

Citygate must first thoroughly understand the agency's current capacity and resources to then assess community needs before making any definitive recommendations. Within the current (challenging) environment, some of these recommendations will be programmatic or structural, while others may be comparative to address how the Department is positioned in relation to other, benchmark agencies in the region. In the interim between current staffing and needed staffing, some realignments may be recommended. Citygate applies a data-informed, predictive analysis to make the most specific staffing and scheduling recommendations, by time of day and day of week. This ensures that even agencies which are experiencing difficulty with recruitment and retention can benefit from targeted realignments in scheduling and coverage where applicable.

Citygate understands the incredible difficulty facing police agencies as it relates to recruitment and retention. To this end, our Final Report will include our new module: ***Staffing Innovations for Recruitment and Retention***, a strategic resource for navigating staffing challenges featuring numerous practical ideas and examples of successful implementation. We believe this module will be an effective tool in generating creative solutions to maximize the impact Department staffing initiatives, helping change to occur—even where it may seem impossible.

How will you incorporate cost-effectiveness analysis into your staffing recommendations?

Citygate will provide a plan that is for what is needed each time we serve a client. We provide recommendations that will maximize the current budget resources available and provide a scaled plan for future planning for agency growth if Citygate concludes that is needed.

Citygate understands that the Village's **fiscal capacity** must be considered when weighing Citygate's ultimate recommendations. Accordingly, we do not make detached, impractical, or "one-size-fits-all" recommendations to any agency. Citygate's reports and recommendations are

delivered with the understanding that the Village is well advised to implement recommendations in conjunction with the advice and counsel of Village management and other stakeholders to best allocate available resources to meet the service delivery expectations of the community, ensuring baseline, core needs can be met and maintained within fiscal constraints.

How will your Final Report empower the Department for practical implementation?

Our Final Report will explain how to phase in recommended changes through use of multiple tables and other tools quantifying priority levels (immediate, near-term, long-term) and fiscal impacts (none, minor, significant) in relation to required Department resources. Where applicable, Citygate will designate goals, strategies to achieve those goals, and the measurable objectives required to fully execute strategies.

Whenever significant change is involved, there is a delicate tension between *what should happen* and *what is possible*. Community needs and agency resources are seldom, if ever, in alignment. Over the course of this engagement, Citygate will spend a significant amount of time with executive- and line-level staff as we develop planning and implementation initiatives which have agency stakeholder buy-in and ensure the Department is not overwhelmed by recommendations or without a clear roadmap. We are also available for standard consultation after the engagement to assist in change management. If desired by the Village, Citygate is prepared to offer further **enhanced implementation support** *after* the project has been completed, which can be added to the project scope of work at the Village's discretion.

Strategic Implementation Plan Example Tools

Recommendation	No Cost	Funding Priority 1	Funding Priority 2
PATROL DIVISION			
Patrol			
1. Consider formalizing the cover shifts with a dedicated squad and supervisor. Redeploy 2 relief Sergeants to newly created cover shifts that address increased daytime service calls.	X		
2. To ensure Patrol officer c… increased services during el… Department should **add 4 m**… committed time across all sh…			
3. To further ensure Patrol c… provide increased services … community, the Department … Patrol after assessing comm… cover shifts to reduce the in… recommendation is based o… currently covered by a CSO…			
4. Redeploy the Sergeant c… review and processing to a …			
5. **Add 2 new police office**… Team.			
6. Deploy Patrol Lieutenants…			

	Goal	Strategy	Objectives		Implementation Category
1	[TEXT]	A: [text]	1A-1	*[text]*	[text]
		B: [text]	1B-1	*[text]*	[text]
		C: [text]	1C-1	*[text]*	[text]
			1C-2	*[text]*	[text]
		D: [text]	1D-1	*[text]*	[text]
		E: [text]	1E-1	*[text]*	[text]
			1E-2	*[text]*	[text]
			1E-3	*[text]*	[text]
		F: [text]	1F-1	*[text]*	[text]
2	[TEXT]	A: [text]	2A-1	*[text]*	[text]
			2A-2	*[text]*	[text]
		B: [text]	2B-1	*[text]*	[text]
			2B-2	*[text]*	[text]

Describe the metrics that will be used to evaluate the effectiveness of the implemented changes

Citygate will provide optimal performance objectives to be measured against as resources are applied to areas where current staffing levels are below needed/recommended levels. These measurements are normally related to response time to calls for service, committed time during shifts, self-directed time available during shifts, and time in a calendar year that is available for scheduled work outside of training and time-off. Additionally, and as discussed previously, Citygate's predictive analysis will demonstrate *in advance* of the addition of new personnel or altered deployment strategies how key changes will affect performance in relation to response to calls for service, including identification of optimal utilization rates and saturation levels.

Beyond the scope of the Village's RFQ/RFP, we have included two links to videos explaining more about what makes Citygate unique among local government consulting firms.



Video #1 – Citygate Understands



Video #2 – How Can We Serve You?

APPENDIX A

CODE OF ETHICS

CODE OF ETHICS

CLIENTS

1. We will serve our clients with integrity, competence, and objectivity.
2. We will keep client information and records of client engagements confidential and will use proprietary client information only with the client's permission.
3. We will not take advantage of confidential client information for ourselves or our firms.
4. We will not allow conflicts of interest which provide a competitive advantage to one client through our use of confidential information from another client who is a direct competitor without that competitor's permission.

ENGAGEMENTS

5. We will accept only engagements for which we are qualified by our experience and competence.
6. We will assign staff to client engagements in accord with their experience, knowledge, and expertise.
7. We will immediately acknowledge any influences on our objectivity to our clients and will offer to withdraw from a consulting engagement when our objectivity or integrity may be impaired.

FEES

8. We will agree independently and in advance on the basis for our fees and expenses and will charge fees and expenses that are reasonable, legitimate, and commensurate with the services we deliver and the responsibility we accept.
9. We will disclose to our clients in advance any fees or commissions that we will receive for equipment, supplies or services we recommend to our clients.

PROFESSION

10. We will respect the intellectual property rights of our clients, other consulting firms, and sole practitioners and will not use proprietary information or methodologies without permission.
11. We will not advertise our services in a deceptive manner and will not misrepresent the consulting profession, consulting firms, or sole practitioners.
12. We will report violations of this Code of Ethics.

The Council of Consulting Organizations, Inc. Board of Directors approved this Code of Ethics on January 8, 1991. The Institute of Management Consultants (IMC) is a division of the Council of Consulting Organizations, Inc.

APPENDIX B

PROJECT TEAM RESUMES

Mr. Gary is the Public Safety Principal for Citygate Associates. Over the last 23 years, he has performed over 500 organizational and deployment studies on public safety departments and has led numerous police services projects, policy evaluations, and Citygate's most recent after-action review for Los Angeles County. Chief Gary is the retired Fire Chief of the Livermore-Pleasanton Fire Department in Alameda County, California. As Public Safety Principal, he leads Citygate's fire, emergency medical services, and police practices. After he led Citygate's law enforcement and fire services teams to successfully complete the Woolsey AAR for Los Angeles County, the Board passed a motion to retain him specifically, by name, for implementation oversight related to the report's recommendations. He also has eight years of experience as an elected official, five of which were as a city council member. He understands the needs of the policy makers to represent their community.

Mr. Gary started his career with the City of Poway in San Diego County, attaining the rank of Battalion Chief / Fire Marshal. He subsequently served as the Administrative Battalion Chief for the Carlsbad Fire Department in San Diego County. He was appointed Fire Chief for the City of Livermore, California in January 1994, and two years later, he successfully facilitated the peer-to-peer merger of the Livermore and Pleasanton Fire Departments into one seamless 10-company department from which he retired as Chief. This successful consolidation was awarded the esteemed Helen Putnam Award for Excellence and Innovation by the California League of Cities in 1999.

Mr. Gary has both a bachelor's and master's degree in Public Administration from San Diego State University. He holds an associate degree in fire science from Miramar Community College in San Diego and a certificate in fire protection administration from San Diego State, and he has attended hundreds of hours of seminar course work in fire protection.

Mr. Gary has served in elected professional positions, including: President, California League of Cities, Fire Chiefs Department; and Chairperson, San Diego County Paramedic Agencies. He has been involved in progressive responsibility for creating or implementing fire protection policy on the local, state, and national levels. He has served as a board member representing cities on the California Office of Emergency Services-Firescope Board and served two terms as the fire chief representative on the California League of Cities Board of Directors. Mr. Gary served on the Livermore School District Board and served as an elected official on the City of Livermore City Council.

Relevant Experience:

Since starting his consulting career with Citygate Associates in 2001, Chief Gary has successfully worked on, managed, or directed over 500 consulting projects, including:

- Served as Public Safety Principal and local knowledge connection for an organizational workload study of the Police Department for the City of Berkeley, CA.

- Served as Public Safety Principal and Project Manager to perform a comprehensive operations and staffing assessment for the Police Department in the City of West Sacramento, California.
- Served as Public Safety Services Principal and Project Manager for a fire and EMS staffing and operations study of the Fire Department for the City of Fort Worth, Texas.
- Served as Public Safety Principal and Fire Project Manager for an operations assessment for the Police and Fire Departments in the City of Orem, Utah, part of which will include a fire department Standards of Coverage assessment and a police field operations review.
- Served as Project Director and provided oversight for a fire department performance review for the City of Enid, Oklahoma, including all aspects of fire services operations, focusing on how to meet the City's protection needs and how to provide operational efficiency in a difficult economy.
- Currently serving as Public Safety Principal and Fire Team Leader for a comprehensive operational study of the Lino Lakes, MN Public Safety Department.
- Served as Public Safety Principal to perform a comprehensive services delivery and staffing review of the Monterey County Sheriff's Department.
- Served as Public Safety Principal and Project Director for an independent operational and organizational assessment for the City of Oceanside Police Department, affecting current, future, and long-term organizational, strategic, and operational plans.
- Served as Public Safety Principal for a Standards of Coverage analysis and a community risk assessment for the Tacoma Fire Department in the City of Tacoma, Washington.
- Served as Public Safety Principal to develop a Fire Master Plan for the Cy-Fair community of northwest Houston. This engagement—based on Harris County Emergency Services District #9's unique Fire and EMS fact pattern and varied risks—included a community risk assessment, a standard of cover study, and a compliance audit.
- Served as Public Safety Principal for Citygate's police department consolidation feasibility assessment for the Cities of Burlingame and San Mateo, California.
- Served as Public Safety Principal, JPA Feasibility Specialist, and Project Manager for a study of hybrid public safety models for the City of Jurupa Valley, California, a follow-on study to Citygate's 2021 feasibility analysis regarding City-provided police services.
- Served as Public Safety Principal, Joint Powers Authority Feasibility Specialist, and Project Manager for a comprehensive City-provided police department feasibility study for the City of Jurupa Valley, CA.

- Served as Public Safety Principal and local knowledge connection for a staffing assessment and resource analysis of the Police Department for the City of La Mesa, CA.
- Served as Public Safety Principal for a law enforcement feasibility study for the City of Palmdale, CA.
- Served as Project Manager, Public Safety Principal, and Merger Specialist for a police services analysis for the City of Rancho Cucamonga, California.
- Served as Public Safety Principal for a Police Department facilities review and headquarters/facilities siting study for the City of Riverside, California, with the goal of developing a new police headquarters facility within the City that optimizes operational services to the community.
- Served as Public Safety Principal and Local Knowledge Connection for a comprehensive services delivery and staffing review of the San Luis Obispo Police Department.
- Served as Public Safety Principal and Project Director for a police dispatch shared services analysis for the Cities of Brea, Buena Park, Fullerton, La Habra, and Placentia, California.
- Served as Public Safety Principal and Project Director for a police services consolidation and contract for shared services analysis for the Cities of Brea, Buena Park, Fullerton, La Habra, and Yorba Linda, California.
- Served as Public Safety Principal to assist the City Council in the City of Coachella, California, in a workshop discussion to consider the methods of studying policing services.
- Served as Public Safety Principal and Project Director for a police staffing and efficiency study for the City of Elk Grove, California.
- Served as Public Safety Principal for a comprehensive services delivery and staffing review for the Police Department for the City of Eloy, Arizona.
- Served as Public Safety Principal to perform a comprehensive public safety deployment and performance review of the Police and Fire Departments for the City of Glendale, Arizona.
- Served as Public Safety Principal for a comprehensive assessment of the Police Department and City Hall facilities for the City of Irwindale, California, in partnership with COAR Design Group (formerly Jeff Katz Architecture). Citygate's role in the study entails performing a thorough review of the Police Department to assess potential changes to future operations.
- Served as Public Safety Principal, Joint Powers Authority Feasibility Specialist, and Project Manager for a feasibility assessment of establishing a Police services Joint Powers Authority for up to seven cities in Riverside County, California, which include Lake Elsinore, Canyon Lake, Jurupa Valley, Moreno Valley, San Jacinto, Temecula, and Wildomar.

- Served as Public Safety Principal and Project Director for a comprehensive management study for the Lawrence Police Department in Lawrence, Kansas.
- Served as Public Safety Principal for a police workload and staffing study for the City of Los Altos, California, in partnership with COAR Design Group (formerly Jeff Katz Architecture).
- Served as Public Safety Principal and Project Director for a Police Department Strategic Plan for the City of Pasco, Washington.
- Served as Public Safety Principal to assist the City of Temecula, California, in estimating the size and likely parcel assessment needed for a single in-town police facility.

Other Relevant Non-Citygate Experience:

- In 2002, Mr. Gary led a seminar that taught the Standards of Coverage (SOC) methodology to members of the Clark County Fire Department.
- In 2005 and into 2006, Mr. Gary coached and assisted the Clark County Fire Department with the initial draft of their rural SOC documents. He advised County GIS on how to prepare the necessary mapping and response statistics analysis. He then coached the project manager on collecting risk assessment information on each rural area, which he then wove into an integrated draft set of risk statements and proposed response policies for each rural area.
- In 2000, Mr. Gary was the lead deployment consultant on a team that developed a new strategic plan for the San Jose Fire Department. The final plan, which used the accreditation system methods and Standards of Coverage tools, was well received by the Department and City Council, which accepted the new strategic plan on a 9–0 vote.
- In 1996, Mr. Gary successfully studied and then facilitated the peer-to-peer merger of the Livermore and Pleasanton Fire Departments into one seamless 10-company department for which he served as Chief. The LPFD represents one of the few successful city-to-city fire mergers in California. The LPFD consisted of 128 total personnel with an operating budget for FY 00/01 of $18M. Service was provided from eight stations and a training facility, and two additional stations were under construction.
- In 1995, Mr. Gary began working with the International Association of Fire Chiefs and International City Management Association Accreditation project on the Standards of Coverage system for fire service deployment. He re-worked the material into a California manual and annually taught a 40-hour course for the California Fire Academy for many years. He conducts seminars on this deployment methodology for the International Fire Chiefs across the United States and Canada.
- In 1994, Mr. Gary effectively led the Fire Department's adding of paramedic firefighters on all engines to increase service. Previously the Alameda County regional system was under-serving Livermore, and the local hospital emergency room was closing. Residents and the City Council approved a local EMS supplemental property tax assessment (successfully re-voted after Proposition 218)

to help pay for this increased service. In 1995, Mr. Gary assisted the City Council and the firefighters union in reaching a new understanding on staffing, and a fifth Fire Company was added to better serve the northwest area of Livermore.

- During his tenure in Carlsbad, he successfully master-planned and opened two additional fire stations and developed the necessary agreements between the development community and the City Council.
- Mr. Gary has developed fire apparatus replacement plans; procured fire apparatus; supervised the development of community disaster preparedness and public education programs; facilitated permit streamlining programs in the Fire Prevention and Building Departments; improved diversity in the Livermore fire department by hiring the first three female firefighters in the City; supervised the Livermore City Building Department, including plan check and inspection services for two years; and master-planned future growth in the north Livermore area for an additional 30,000 people in a "new town" area.
- Mr. Gary facilitated a successful regional dispatch consolidation between Poway and the City of San Diego Fire Department. He developed and implemented fire department computer records systems for Carlsbad and Livermore.
- Mr. Gary has been a speaker on the proper design of information systems at several seminars for Fire Chiefs, the California League of Cities, and the Fortune 100. He has authored articles on technology and deployment for national fire service publications.
- Mr. Gary is experienced as an educator in teaching firefighting, paramedicine, and citizen CPR programs. As a community college instructor, he taught management and fire prevention. He has been an instructor for State Fire Training and the San Diego Paramedic program.

Instructor and Lecturer:

- Instructor and lecturer on fire service deployment for the Commission on Fire Accreditation Standards of Coverage methodology. Over the last five years, Mr. Gary has presented one-day workshops across the US and Canada to fire chiefs. Presentations have included:
  - The International Association of Fire Chiefs Convention
  - US Navy Fire Chiefs in Norfolk, Virginia
  - US Air Force Fire Chiefs at the USAF Academy, Colorado Springs, Colorado
  - Seattle-area Fire Chiefs
  - Vancouver British Columbia Fire Chiefs Association
  - The Michigan/Indiana Fire Chiefs Association School at Notre Dame University
  - The California Fire Training Officers annual workshop

- Developed and taught the 40-hour course in fire deployment methods for the California Fire Academy for seven years. Over 250 fire officers have been trained in this course.

Presentations:

- "Mapping the Future of Fire." First ever fire service technology conference, October 2000, Dallas, Texas. Outlined fire service needs, especially for GIS mapping and mobile data technologies in the fire service.

Publications:

- Edited, partially wrote, and co-developed the second, third, and fourth editions of the *Commission on Fire Accreditation Standards of Response Cover Manual*.
- Fire Chief Magazine article. February 2001, "System of Cover." Using the Accreditation Commission's Standards of Response Cover systems approach for deployment.
- Fire Chief Magazine article. December 2000, "Data to Go." Designing and implementing wireless data technologies for the fire service.

Memberships Held:

- International Association of Fire Chiefs, Fairfax, VA
- California Fire Chiefs Association, Rio Linda, CA
- National Fire Protection Association, Quincy, MA

Dr. Serier served as a law enforcement officer for 32 years. He served in two other city police departments before joining the Saint Paul Police Department, where he rose to the rank of Commander. He then became an administrator at the Ramsey County Sheriff's Office and later became County Sheriff. As Sheriff, he was responsible for a $57 million budget and 450 employees. He recently retired as the Assistant Chief of Police from the Saint Paul Police Department, where he managed daily operations and was responsible for a $122 million budget. Additionally, he is the author of the 2019 Organizational Study of the Saint Paul Police Department.

Dr. Serier has worked with government at the city, county, and state levels, as well as with federal agencies, on an array of issues as an executive. He holds a bachelor's degree from Hamline University and earned both a master's and a doctoral degree in Leadership, Policy, and Administration from the University of Saint Thomas in Saint Paul, Minnesota. He is also a graduate of the FBI National Academy in Quantico, Virginia, and is past board chair of a regional nonprofit serving those in need of mental health services.

Relevant Experience:

The following is a selection of Dr. Serier's consulting experience since joining Citygate:

- Currently serving as Police Team Leader for a comprehensive operational study of the Lino Lakes Public Safety Department.
- Served as Police Services Senior Associate for an independent operational and organizational assessment for the City of Oceanside Police Department.
- Served as Lead Consultant and Police Services Senior Associate for a comprehensive operations and staffing assessment of the Police Department for the City of Minnetonka, Minnesota.
- Served as Police Services Senior Associate for a comprehensive management study for the Lawrence Police Department in Lawrence, Kansas.

Employment:

Saint Paul Police Department in Saint Paul, Minnesota

Assistant Chief *2022–2024*

- Leads the Support Services and Administration Division.

Commander *2020–2022*

- Served as Director of Training.
- Led all training functions of the Department and its Professional Development Institute.

Ramsey County Sheriff's Office in Ramsey County, Minnesota

County Sheriff *2017–2019*

- Served as Chief Executive Officer over 450 employees.
- Directed the priorities for a budget of $57 million.

- Provided strategic direction for all Sheriff's Office operations.
- Connected with community priorities to increase the level of service and transparency of the Sheriff's Office. Engaged in community, policy, and legislative initiatives to reflect the needs and interests of residents countywide.
- Created entry-level and promotional opportunities that made Ramsey County the most diverse Sheriff's Office in Minnesota, including a Detention Center with over 53 percent of the staff made up of women and people of color.

Inspector / Undersheriff / Chief Deputy *2011–2017*

- As Chief Deputy:
  - Served as chief operating officer for a Sheriff's Office of over 420 employees.
  - Responsible for the fiscal direction of a $54 million budget.
  - Managed the strategic direction of all Sheriff's Office operations.
  - Led labor negotiations with nine unions.
  - Administered professional standards.
  - Oversaw investigations and the disciplinary process for all five divisions of the agency.
- As Undersheriff:
  - Led Patrol Operations Division of 100 full-time personnel and 300 volunteers, which served as the police department for seven contract communities through its Patrol Unit, Criminal Investigation Unit, and Community Support Services Unit.
  - Developed an increased presence of Sheriff's Office youth services in suburban Ramsey County.
  - Worked with six city managers from seven municipalities to deliver services.
- As Inspector:
  - Conducted the writing and managing implementation of a new policy manual.
  - Managed the reorganization of the Water Patrol Unit, the K-9 Unit, and the Dive Team, consisting of full-time and part-time employees and volunteers.
  - Developed a new Mobile Field Force with an all-hazards model to support Emergency Management field functions.
  - Served as team commander of 50 Deputies and Correctional Officers.

Saint Paul Police Department in Saint Paul, Minnesota ***2000–2011***

- Began service as Patrol Officer and rose through the ranks to Commander.

- Conducted a four-phase organizational study of the Department over a 12-month period, analyzing functionality, workloads, and recommended process improvements for the Chief of Police.
- Worked in conjunction with other members of the administrative team on change initiatives within the organization.
- Managed operations of the Traffic Enforcement Team, Traffic Accident Investigators, and the Parking Enforcement Unit.
- Commanded the FORCE Unit, which is involved in special operations, search warrants, street-level narcotics interdiction, and problem property remediation.
- Supervised crime prevention civilian staff and worked with them on innovations to the departmental approach to community education and crime analysis.
- Served as executive officer to an assistant chief.
- Managed division budgets.
- Supervised patrol district operations.
- Served as Academy Commandant for Saint Paul Police Academy.
- Worked as investigator in Property Crimes.
- Served as a training officer and program manager.

Eagan Police Department in Eagan, Minnesota

Police Patrol Officer *1990–2000*

Education and Certificates:

- Doctor of Education from University of Saint Thomas in Saint Paul, Minnesota – 2011
- Master of Arts from University of Saint Thomas in Saint Paul, Minnesota – 2003
- Bachelor of Arts from Hamline University in Saint Paul, Minnesota – 1990
- FBI National Academy Class #253 – 2013

Mr. Woodward has 25 years of law enforcement experience serving in a variety of positions with the Arizona Department of Public Safety (DPS) and the Arizona High Intensity Drug Trafficking Area. The unique nature of the Arizona DPS role in law enforcement throughout the state gave him valuable experience in working closely with agencies of all sizes and jurisdictions, including large and small municipalities, remote and urban counties, tribal agencies, and a variety of federal agencies. Mr. Woodward has patrol experience in both remote and urban areas at ranks ranging from officer to commander. His investigative experience includes liquor violations, fraud, narcotics, organized crime, intelligence, terrorism, internal investigations, and public corruption. His incident command experience includes officer-involved shootings, large-scale incidents on the Phoenix metropolitan freeway, demonstrations at the state capitol, and presidential escorts. While assigned to the Inspections Unit, he conducted detailed comprehensive audits of agencies throughout the state. He was also the project manager for the first state-level/statewide photo enforcement program in the nation. Other areas of his experience include human resources, media relations, and legislative testimony.

After retiring from Arizona DPS as Commander of Highway Patrol operations on the Phoenix metropolitan freeway system in 2010, he accepted a position as Training Director for the Arizona High Intensity Drug Trafficking Area. As a Training Director, he ran a dynamic training program, with classes attended by both sworn and civilian law enforcement personnel from throughout the country. These classes were recognized by the Arizona Peace Officer Standards and Training Board, Northern Arizona University, and Wayland Baptist University. Mr. Woodward has a bachelor's degree in Business Management and is a graduate of the Federal Bureau of Investigation National Academy and the Police Traffic Management course at the Institute of Police Management and Training.

Relevant Experience:

The following is a selection of Mr. Woodward's consulting experience since joining Citygate:

- Served as Police Services Specialist for a staffing assessment and resource analysis of the Police Department for the City of La Mesa, CA.
- Served as Police Services Specialist and Project Coordinator for an Independent Review of the Metro Transit Security Public Safety Department Feasibility Study for the Los Angeles County Metropolitan Transit Authority.
- Currently serving as Police Services Senior Associate for a comprehensive operational study of the Lino Lakes Public Safety Department.

Employment:

Director – Arizona Regional Training Initiative

Arizona High Intensity Drug Trafficking Area August 2015–August 2017

- Led a dynamic training program attended by students from throughout the United States. Classes covered a wide variety of topics, were attended by all ranks of sworn and civilian personnel and ranged from 4 to 80 hours in length. All classes were recognized by Arizona Police Officer Standards and Training (AZPOST), and

several classes were recognized for college credit by Northern Arizona University and Wayland Baptist University.

Commander – Metro Highway Patrol Bureau

Arizona Department of Public Safety June 2006–April 2010

- Commanded a patrol bureau of 275 authorized positions patrolling the Phoenix metropolitan freeway system.
- Coordinated high-profile Incident Command for major freeway events as well as volatile demonstrations at the Arizona State Capitol and presidential escorts.
- Served on numerous Critical Incident Review Boards.
- Directed administration of numerous budgets including State General Funds, State Grants, Racketeer Influenced and Corrupt Organization (RICO) Grants, and Federal Grants.
- Improved the use of intelligence by patrol officers by partnering with the East Valley Fusion Center.

Commander/Project Manager – Photo Enforcement Program

Arizona Department of Public Safety January 2008–October 2009

- Developed the first state-level/state-wide photo enforcement program in the nation.
- Directed the development of a detailed, high-profile, large-scale Request for Proposal (RFP).
- Partnered with numerous stakeholders within state, county and municipal governments and the private sector.
- Conducted briefings and testimony for the Arizona Governor's Office and State Legislature.
- Coordinated high profile press releases and interviews for local and national media.
- Conducted presentations at law enforcement and highway safety conferences.
- Successfully represented the State of Arizona during a 2013 trial for a $7 million wrongful death lawsuit related to the homicide of a photo enforcement vehicle operator.

Lieutenant – Agency Support Division Staff

Arizona Department of Public Safety February 2005–April 2005

- Completed administrative tasks and special projects including the Division Strategic Plan, detailed management reports, and the implementation of an automated fleet management system.

Lieutenant – Central Patrol Bureau Staff

Arizona Department of Public Safety May 2004–February 2005

- Assisted the Central Patrol Bureau Commander with all areas of operations including preparation of detailed management reports, Internal Affairs investigations, media requests, legislative inquiries, fleet management, racial profiling instruction at citizen academies and officer academies, and traffic safety presentations at corporate safety meetings.

Lieutenant – Intelligence Investigations District

Arizona Department of Public Safety April 2003–May 2004

- Commanded the operations of the Intelligence Investigation District comprised of sworn agents, civilian intelligence analysts, and intelligence research specialists.
- Contributed to the development of the Arizona Counter Terrorism Information Center.
- Coordinated the implementation of the automated Arizona Criminal Intelligence System.

Lieutenant – Canine District

Arizona Department of Public Safety January 2001–April 2003

- Commanded a criminal interdiction unit of approximately 25 canine units during the seizure of 78,646 pounds of marijuana, 1,721 pounds of cocaine, 287 pounds of methamphetamine, and $4,857,588 in U.S. currency.
- Testified in court proceedings and provided media interviews regarding high-profile racial profiling allegations involving the American Civil Liberties Union.
- Served as a Racial Profiling Subject Matter Expert for Arizona Police Officer Standards and Training (AZPOST).

Lieutenant – Highway Patrol District Commander

Arizona Department of Public Safety November 1999–January 2001

- Commanded a rural highway patrol district of approximately 60 officers covering 1,500 miles of highway in Northeastern Arizona, including three major Indian reservations.
- Partnered on a regular basis with leadership from federal, state, county, and tribal agencies.

Sergeant/Officer

Arizona Department of Public Safety October 1987–November 1999

- Conducted detailed Inspections and Control Unit audits of internal departmental units and outside agencies throughout the state covering all areas of operations, including community relations, hiring, compensation, budget, grant administration, RICO funding, property and evidence, fleet administration, technology, operational communications, policy, internal investigations, discipline, training, equipment, organizational structure, promotional processes, EEO, and employee morale.

- Served in variety of patrol, investigative, and administrative positions.

Education and Professional Development:

- Completed 32 credit hours in the Master of Professional Counseling Program at Grand Canyon University, GPA 4.0
- Bachelor of Science, Business Management, Arizona State University 1987
- FBI National Academy, Federal Bureau of Investigation (FBI), 2001
- Police Inspections, University of North Florida Institute of Police Technology and Management, 1997
- Certificate in Public Sector Human Resource Management, Council on Education in Management/George Washington University, 2005
- Command Level National Incident Management System (NIMS) Certification, U.S. Department of Homeland Security, 2009
- Police Traffic Management, University of North Florida Institute of Police Technology and Management, 2000
- Leadership Development, Arizona Regional Community Policing Institute/Arizona State University Advanced Public Executive Program, 1998
- Leadership Through People Skills, Psychological Associates, 2002
- Policing the Mentally Ill, Public Safety Alliance, 2017
- Racial Profiling Symposium, Northwestern University, 2001 and 2005
- Drug Unit Commander Leadership Course, Drug Enforcement Agency (DEA) and Arizona High Intensity Drug Trafficking Area (HIDTA), 2016
- Training Coordinator Conference, National High Intensity Drug Trafficking Area (HIDTA), 2016
- Intelligence Analyst Basic, Advanced, and Supervisor Courses, National High Intensity Drug Trafficking Area (HIDTA), 2016-2017
- Basic, Advanced, and Supervisor Courses, National High Intensity Drug Trafficking Area (HIDTA), 2016-2017

Professional Memberships (Past and Current):

- FBI National Academy Associates
- Police Executive Research Forum
- Arizona Association of Chiefs of Police
- Northern Arizona Police Association
- Four States Police Association
- Association of Threat Assessment Professionals
- Association of Law Enforcement Intelligence Units

- Arizona Law Enforcement Canine Association
- Valley Leadership
- Phoenix 100 Club
- Horse Rhythm Foundation Law Enforcement Advisory Committee

Honors and Awards:

- Director's Unit Citation, Human Resources, 2007
- Director's Unit Citation, Arizona Counter Terrorism Information Center, 2004
- Director's Unit Citation, Special Operations Unit Tactical Canine Program, 2003
- Director's Unit Citation, Canine Unit, 2002

Dr. Booker Hodges is a law enforcement professional who has worked as a school resource officer, patrol deputy, narcotics detective, S.W.A.T. operator, patrol overnight watch commander, inspector, Undersheriff, Acting Chief Deputy, and Chief of Police. He has overseen Training, Human Resources, Fleet, Professional Standards, and Technology units. He currently serves as Assistant Commissioner of Law Enforcement for the Minnesota Department of Public Safety, where he is responsible for overseeing 1,400 employees and a budget over $225 million dollars, encompassing the Minnesota State Patrol, the Minnesota Bureau of Criminal Apprehension, and Minnesota Alcohol and Gambling Enforcement. Dr. Hodges spent time at the Dakota County Sheriff's Office, the Ramsey County Sheriff's Office, and the Prior Lake Police Department.

Dr. Hodges is the only active police officer in the history of the NAACP to serve as a branch president. During his five-year tenure as president of the Minneapolis NAACP, he was responsible for a landmark agreement to improve working conditions for employees of color and to diversify the Minneapolis Park Board. During his time with the Ramsey County Sheriff's Office, he was responsible for the hiring that led to the Ramsey County Jail becoming the first minority-majority staffed correctional facility in the state of Minnesota.

Dr. Hodges is also a sought-after national speaker on the topics of unconscious bias and recruiting/retention of twenty-first century workforces. Dr. Hodges earned a doctorate degree in Public Administration from Hamline University, a master's degree from Saint Mary's University, and a bachelor's degree from Florida Southern College. His experience in community relations and law enforcement are unique and have given him a dual perspective on current events surrounding the law enforcement profession. He is also an Adjunct Professor at Northwestern University in Saint Paul, Minnesota, and President of the Northstar Chapter of the National Association of Black Law Enforcement Executives.

Employment:

Assistant Commissioner

Minnesota State Department of Public Safety *2019–Present*

- Oversees the Minnesota State Patrol, Minnesota Bureau of Criminal Apprehension, and Alcohol and Gambling Enforcement Division, which totals more than 1,400 employees and an operating budget of over $225 million.

Chief of Police

City of Prior Lake, Minnesota *2018–2019*

- Led the daily operations of the City Police Department, with a sworn complement of 30 officers in a Minneapolis suburban community.
- Managed an operating budget of $4.6 million.

Undersheriff

Ramsey County Sheriff's Office, Minnesota *2016–2018*

- Managed a $58 million budget for more than 500 employees serving a community of 550,000 residents.

- Led the Internal Affairs, Human Resources, Training, and Information Technology units.
- Oversaw professional standards, accounting, payroll, staff development, department policy, fleet management, background investigations, and research and development.

Supervising Sergeant

Dakota County Sheriff's Office, Minnesota *2006–2016*

- Served as Patrol Watch Commander and oversaw court security.
- Served as School Resource Officer, S.W.A.T. operator, and Narcotics Detective for an agency with more than 200 employees serving a population of 425,000 residents.

Education:

- Doctor of Public Administration, Hamline University – 2015
- Master of Arts in Public Safety, Saint Mary's University – 2007
- Law Enforcement Certificate, Minneapolis Community College – 2003
- Bachelor of Science in Criminology and Political Science, Florida Southern College – 2000

Awards and Commendations:

- Minneapolis Police Department Chief's Award of Merit – 2020
- Meritorious Service Medal, Minnesota Sheriff's Association – 2015
- Dakota County Sheriff's Office Award of Merit – 2015
- Dakota County Sheriff's Office Unit Citation – 2013

Memberships:

- African American Leadership Council
- Fraternal Order of Police
- Institute for Lawful, Safe, and Effective Policing – Board Member
- International Association of Chiefs of Police
- Law Enforcement Action Partnership – National Speakers Bureau
- Minnesota Crisis Intervention Team Officers Association
- Minnesota Police and Peace Officers Association
- National Alliance for the Mentally Ill
- National Asian Police Officers Association – Minnesota Chapter
- National Black Police Officers Association – Minnesota Chapter
- National Latino Police Officers Association – Minnesota Chapter

- National Organization of Black Law Enforcement Executives – President of the Northstar Chapter
- Police Executive Research Forum

With 34 years of experience in law enforcement, Chief Steven Frazer began with the Roseville Police Department before spending the majority of his career with the Saint Paul Police Department (SPPD). With the SPPD, he served in a variety of roles and ascended to the rank of Senior Commander. During his eight-year assignment to Bomb Squad, Chief Frazer worked closely with other tactical units to develop training and protocols to integrate bomb, SWAT, and canine responses to incidents. As a Sergeant, he worked in robbery, sex crimes, and homicide units.

As a Commander, Chief Frazer was the last sworn Human Resources Director for the agency. He worked to civilianize this position, providing greatly needed support for all in command when dealing with personnel issues. Frazer also led several investigative units—the Training Unit, the Sex Crimes Unit, and the Special Operations Unit, which trained and responded to crowd management situations, large community events, and natural disasters.

Chief Frazer has developed operational plans for many large community events and police operations. He was in charge of training 4,500 officers from across the country for the 2008 Republican National Convention. He also drafted an incident action plan for the Red Bull Crashed Ice events, which drew crowds of over 100,000 spectators.

Chief Frazer also served as the Chief Deputy for the Ramsey County Sheriff Office. In this role, he was responsible for budgets totaling $60 million across five divisions for an agency of 450 personnel that provided countywide services and contract services to seven incorporated cities.

Throughout his career, Chief Frazer has been involved in training and training development, as well as operational deployment, across the region. As the Training Commander of the SPPD, he led teams that developed a new field training process, numerous academies, and constantly evolving training protocols.

Relevant Experience:

The following is a selection of Chief Frazer's consulting experience prior to joining Citygate:

- Worked with the Shakopee Mdewakanton Sioux Community in the refinement of an agreement for local government aid between the tribe and city of Prior Lake.
- Contracted with numerous agencies across the county to improve outcomes for agencies and officers involved in use of force encounters, shootings, and civil litigation.
- Worked with Praxis International to develop and implement The Blueprint for Safety, a comprehensive response strategy to domestic violence, which continues to this day.

Employment:

Prior Lake Police Department, Prior Lake, MN

Chief of Police *May 2019–December 2022*

- Served as the Chief of Police of Prior Lake, a city of 29,000 located in Scott County, Minnesota. Prior Lake is responsible for all police services to the Shakopee

Mdewakanton Sioux Community reservation and gaming enterprise. The Mystic Lake Enterprise is the second largest Indian gaming facility in the country.

- Launched a Mystic Lake Casino beat officer program which has further nurtured the relationship between tribal and city government and controlled financial outlay for both communities, all while increasing understanding and enforcement in a post-George Floyd America.

Ramsey County Sheriff's Office, Ramsey County, MN

Chief Deputy *2017–2018*

- Worked with seven unions on the creation of a new schedule for the Jail Division which reduced mandatory overtime costs by two million dollars while increasing employee satisfaction to 86 percent.
- Negotiated multiple new service agreements with the seven cities contracting for patrol services.
- Worked with a multidiscipline team to manage and police events surrounding the trial of a former officer for a nationally known, officer-involved shooting. This included court security and operational deployment during civil unrest across the region.

Saint Paul Police Department, Saint Paul, MN

Senior Commander *2012–2017*

- As Senior Commander of the Special Operations Unit, was responsible for monitoring and staffing all crowd management events following the death of a motorist during a 2015 officer-involved shooting in a nearby community. Daily protests were held for nearly one year.
- As Senior Commander of the Central District, was responsible for all patrol operations and special events for this portion of the city. During this tenure, developed and implemented patrol and security plans for various community events including The River Edge Music Festival, Red Bull Crashed Ice, Hmong New Year Celebration, Cinco de Mayo, Twin Cities Marathon, Xcel Energy Arena events, and the St. Patrick's Day Parade.

Commander *2006–2012*

- Training Unit Commander
- Sex Crimes Unit Commander
- Eastern District Investigative Commander

Education:

- University of Virginia – master's degree in public administration
- Saint Mary's University – master's degree in business administration
- Saint Mary's University – bachelor's degree in law enforcement

Certificates:

- FBI National Academy, Quantico, Virginia – Session 242

Professional Organizations:

- International Chiefs of Police Association
- Minnesota Chiefs of Police Association

Community Service:

- Minnesota Association of Training Officers Executive Board

Mr. Lind has broad experience in multiple industries, including the high-tech sector and municipal government, the latter of which included two years as a performance improvement analyst. His municipal government experience has largely focused on fire, EMS, and police performance; staffing analysis; facilities location studies; and alternative service delivery modeling. He has used data and business transformation techniques throughout his career across the globe. Mr. Lind is skilled with developing and conducting statistical research to answer operations questions, and he is equally comfortable with survey research. He has two published survey research papers, including one he developed for Rotary International.

Mr. Lind is a Lean Six Sigma Certified Black Belt and has a bachelor's degree and two master's degrees in International Business, all from different countries.

Relevant Experience:

The following is a selection of Mr. Lind's consulting experience since joining Citygate:

- Served as Statistical and Operational Analysis Associate for a Police Department facilities review and headquarters/facilities siting study for the City of Riverside, California, with the goal of developing a new police headquarters facility within the City that optimizes operational services to the community.
- Served as Statistical and Operational Analysis Associate to perform a comprehensive services delivery and staffing review of the San Luis Obispo Police Department.
- Served as Statistical and Operations Analysis Associate for the first-ever independent Standards of Coverage evaluation of the Los Angeles Fire Department's fire and emergency medical services deployment system.
- Served as Statistical and Operational Analysis Associate for an organizational workload study of the Police Department for the City of Berkeley, CA.
- Served as Statistical and Operations Analysis Associate to conduct an ambulance services oversight analysis for the City of San Diego Fire-Rescue Department, as well as helping to co-design a Request for Proposal to successfully re-bid the system.
- Served as Statistical and Operational Analysis Associate for a staffing assessment and resource analysis of the Police Department for the City of La Mesa, CA.
- Served as Statistical and Operational Analysis Associate for a law enforcement feasibility study for the City of Palmdale, CA.
- Served as Statistical and Operational Analysis Associate for a staffing assessment and organizational analysis of the Police Department for the City of San Mateo, CA.
- Served as Statistical and Operations Analysis Specialist for a service delivery and staffing study for Portland Fire and Rescue in the City of Portland, Oregon.

- Served as Statistical, GIS, and Operational Analysis Associate for a comprehensive City-provided police department feasibility study for the City of Jurupa Valley, California.
- Served as Statistical and Operational Analysis Associate for a police staffing and efficiency study for the City of Elk Grove, California.
- Served as Statistical and Operational Analysis Associate for a comprehensive services delivery and staffing review for the Police Department in the City of Eloy, Arizona.
- Served as Statistical, GIS, and Operational Analysis Associate for a feasibility assessment of establishing a Police services Joint Powers Authority for up to seven cities in Riverside County, California, which include Lake Elsinore, Canyon Lake, Jurupa Valley, Moreno Valley, San Jacinto, Temecula, and Wildomar.
- Served as Statistical and Operational Analysis Associate for a comprehensive management study for the Lawrence Police Department in Lawrence, Kansas.
- Served as Statistical and Operational Analysis Associate for a police workload and staffing study for the City of Los Altos, California, in partnership with COAR Design Group (formerly Jeff Katz Architecture).
- Served as Statistical and Operational Analysis Associate for a comprehensive operations and staffing assessment of the Police Department for the City of Minnetonka, Minnesota.
- Served as Statistical and Operational Analysis Associate to perform a comprehensive services delivery and staffing review for the Monterey County Sheriff's Department.
- Served as Statistical and Operational Analysis Associate for an independent operational and organizational assessment for the City of Oceanside Police Department, affecting current, future, and long-term organizational, strategic, and operational plans.
- Served as Statistical and Operational Analysis Associate for a Police Department Strategic Plan for the City of Pasco, Washington.
- Currently serving as Statistical and Operational Analysis Specialist for a comprehensive operational study of the Lino Lakes Public Safety Department.
- Served as Statistical, Geographic Information Systems, and Operational Analysis Specialist to perform a comprehensive public safety Master Plan that will enable the Police and Fire-Medical Departments to complete their organizational programmatic goals while falling in line with the General Plan 2035 for the City of Surprise, Arizona, and the City Council Strategic Plan.
- Served as Statistical and Operational Analysis Associate to perform a comprehensive operations and staffing assessment for the Police Department in the City of West Sacramento, California.
- Served as Statistical, Geographic Information Systems, and Operational Analysis Associate for a public safety staffing study for the City of Woodbury, Minnesota,

which entailed a fire services Standards of Coverage and headquarters assessment and a police, fire, and emergency medical services integrated analysis overview.

- Served as Statistical, Geographic Information Systems, and Operational Analysis Specialist to perform a comprehensive services delivery and staffing review for the Yuba County Sheriff's Department.

Employment:

Performance Analyst

City of Vancouver, Washington *September 2012–August 2014*

- Worked with directors across the City to obtain requirements for business transformation projects and led the development, testing, and implementation of business solutions. Provided training to more than 200 City staff on Lean Six Sigma concepts and tools, including the DMAIC (design, measure, analyze, improve, and control) method, statistical process control, hypothesis testing, and others.
- Worked closely with the Police Chief and his staff to review several administrative functions, with the goal of staffing the East Precinct front desk within existing budget constraints. Analysis revealed that the purchasing, inventory, and grants management functions could be simplified and reconfigured to staff the East Precinct front desk with no additional labor cost.
- Worked closely with the Fire Chief and key staff to define objectives for business transformation projects:
  - Assessed the use of SUVs to respond to medical calls to reduce response time and cost and to maintain/improve the quality of patient care. Although test results were favorable, alternative tactical configurations were recommended to improve results.
  - Assessed the optimum composition, configuration, and geographic placement of fire stations given population growth, call volume and location, and budgetary constraints. Results revealed that moving two fire stations would improve response time for critical service areas, as well as improve tactical capability.
  - Worked with City and County partners to examine medical priority dispatch system code types and prioritize them appropriately. For example, assaults and attempted suicides were reduced from Priority 1 to Priority 2 because police must secure the scene prior to EMS providing service.
- Conducted a variety of full life-cycle survey projects from birth-to-earth, including identifying research questions, survey development, data gathering and cleanup, analysis, interpretation, and making recommendations.
- With the CFO and finance team, scoped and defined a project aimed at reducing error and cycle time in the Procure-to-Pay process.
- Trained and led a team of Fire Department analysts on the scientific method to help them execute pilot projects successfully from problem definition to solution implementation.

Volunteer Research Analyst

Rotary International, Evanston, Illinois *May 2011–December 2011*

- In collaboration with the Chief Information Officer and Rotarians across the world, completed a full-scale global marketing research study to determine how Rotary International might better leverage social media technology to help Rotarian volunteers be more effective in their Rotary work.
- Worked with Rotary's Chief Information Officer to identify the research question and develop a scientifically robust survey instrument for testing.
- Rotarians were interviewed to develop a qualitative framework of concepts relevant to the research question, and a quantitative survey instrument was developed out of the conceptual framework.
- After a pilot test of the survey, a 66-question survey was developed around 14 statistically valid and reliable constructs.
- The survey was translated to seven languages, back translated, and distributed to 26,500 Rotarians worldwide, with more than 1,100 valid responses coming from 72 countries. A final 58-page statistical analysis with strategic recommendations was provided to the board of directors, including that Rotary should increase its Facebook presence because it is a significant factor ($p<.000$ @ 18 percent of the variance) in driving club engagement among Rotarians, particularly for Rotarians who are involved in international, vocational, and youth service projects.

Consultant

Confidential Client, China *April 2011–August 2011*

- Client requested assistance with handling a variety of human resource challenges in advance of a major acquisition-based market expansion. The focus of the project was to identify tools and techniques to facilitate transfer of corporate policy and processes to improve post-acquisition integration. Particular focus was given to knowledge transfer due to Chinese labor market conditions because job-hopping was commonplace in China at the time.
- Identified that labor market competitive advantage in the Chinese labor market could be achieved through employee performance planning (e.g., employees with specific objectives to achieve) coupled with corporate support in training, motivation, and performance rewards are better equipped to retain key talent.
- Demonstrated how Lean Six Sigma can foster the transfer of tacit knowledge to explicit knowledge with careful inquiry and documentation.
- Demonstrated how Lean Six Sigma is an excellent method to measure performance for continued employee development, knowledge management, and process quality control.
- Demonstrated how performance planning helps companies improve quality by partnering with employees to establish mission-aligned performance goals.

- Recommended enhancements to company's corporate training and education programs to improve the reach and effectiveness of employee training while simultaneously reducing training costs.

Graduate Student

ESC Rennes School of Business, Rennes, France *September 2010–April 2012*

- Completed a dual master of arts degree in international business at ESC Rennes School of Business (otherwise known as École Supérieure de Commerce de Rennes) and Open University in Milton-Keynes, United Kingdom. Courses for both degrees were held in France.

Project Manager

AT&T Global Network Services, Southbury, Connecticut *May 1999–June 2010*

- AT&T Global Services provides virtual private network services to enterprise customers via its global data network backbone. The Service Delivery team manages an average work in progress of 3,500 customer projects daily, with annual revenues of approximately $4.7 billion worldwide (as of year-end 2010). Directed daily provisioning operations, supervising six provisioning teams consisting of 65 individuals in the US. Supported more than 130 upstream project managers and more than 100 network engineers in North and South America, Europe, and Asia.
  - Defined and led multiple process improvement projects with statistically significant improvements in cycle-time and variance. Received a Customer Service Excellence Award for these improvement projects, which is awarded to less than 0.1 percent of employees worldwide.
  - Developed a variety of tools and reports to help detect, control, eliminate, and mitigate process errors, as well as improve flow and cycle time.
  - Used quantitative data to analyze operational trends and develop and implement strategic quality improvement projects.
  - Developed and provided training to hundreds of employees in North and South America, Europe, and Asia.
  - Provided regular progress reports and presentations on quality improvement projects to the division vice president and other senior management.
- Other job functions at AT&T included the following:
  - Transport Manager (2003–2006) – Primarily responsible for ensuring delivery of network services (circuits and permanent virtual circuits) for client projects.
  - Circuit Build Coordinator (2001–2003) – Primarily responsible for data circuit engineering and circuit delivery.
  - Circuit Order Writer (1999–2001) – Primarily responsible for placing vendor purchase orders for data circuits.

Technical Service Manager

TJS Electronics & Peripherals Inc., Bradford, Connecticut *February 1997–May 1999*

- Tested and assembled product for delivery. Managed product returns and customer service for enterprise clients. Provided training and support to customers as needed.
  - Slashed average daily inventories by $50,000 USD per month (or five percent of annual revenues) through Just-In-Time / Toyota Production System techniques.
  - Co-developed one of the first USB external hard discs.

Education:

- Master of Arts in International Business from École Supérieure de Commerce de Rennes – 2012
- Master of Arts in International Business from Open University – 2012
- Bachelor of Science in International Business from Quinnipiac University – 2008
  - Magna Cum Laude

Certificates:

- Lean Six Sigma Black Belt, Pyzdek Institute, LLC – September 2014
- Lean Six Sigma Green Belt, AT&T (Juran Institute) – October 2008
- Lean Six Sigma Yellow Belt, AT&T (Juran Institute) – April 2008

APPENDIX C

RECENT CLIENT LETTERS OF REFERENCE

Docusign Envelope ID: A6031DBF-2787-47EC-96B0-09A780AFF6F8

SURPRISE
ARIZONA

FIRE-MEDICAL DEPARTMENT
CITY OF SURPRISE
14250 W. STATLER PLAZA, SUITE 101
SURPRISE, AZ 85374
T. 623·222·5000

1/8/2025

To Whom It May Concern:

I am writing to express my highest recommendation for Citygate, a consulting company dedicated to serving communities by cultivating good governance and transformational change. I have had the pleasure of working closely with Citygate on several projects, including the most recent Public Safety Master Plan for the City of Surprise Police and Fire Departments.

Citygate successfully administered the development of the 2017 Public Safety Master Plan, which involved a comprehensive assessment of the current state of public safety in the City of Surprise, as well as the development of a long-term plan to improve public safety services.

Throughout the project, Citygate demonstrated their expertise in project management, stakeholder engagement, and strategic planning. They worked closely with City staff, public safety officials, and community members to gather input and develop a plan that met the needs of all stakeholders.

I was particularly impressed with Citygate's ability to manage the complex and often competing interests of the various stakeholders involved in the project. They were able to build consensus and develop a plan that all stakeholders supported.

I have no doubt that Citygate would be an asset to any organization looking for a partner in project and planning management. I highly recommend them for any project, particularly those involving public safety.

Additionally, I am pleased to announce that we have once again selected Citygate to partner with us to update our Public Safety Master Plan in 2025. This decision reflects our confidence in their expertise and the value they bring to the project.

Sincerely,
Brenden Espie
Fire Chief

DocuSigned by:
Brenden Espie
9CE7F3AAFF38461...

Dates of work performed: 1/1/2016 - 11/30/2016
Type of work performed: Public Safety Master Plan development

ORANGE COUNTY FIRE AUTHORITY

P.O. Box 57115, Irvine, CA 92619-7115 • 1 Fire Authority Road, Irvine, CA 92602

Brian Fennessy, Fire Chief **(714) 573-6000** **www.ocfa.org**

January 8, 2025

Subject: **Letter of Reference for Citygate Associates, LLC**

To Whom It May Concern:

Citygate Associates, LLC was awarded a Master Consulting Agreement on November 15, 2018, following a competitive RFQ process. Over the course of their engagement, which included a three-year term with two additional one-year renewals, Citygate demonstrated exceptional skills and expertise in managing complex consulting services across various functions. Their task of providing a comprehensive Service Level Assessment (SLA) spanned from early 2019 through August 2020, with specific attention to key areas including Emergency Command Center (ECC), Emergency Medical Services (EMS), Fleet Services, Field Deployment Standards of Coverage, Executive Leadership Team/Human Resources with a later addition of Business Services and Community Risk Reduction.

Citygate's successful administration of this program was marked by their methodical and data-driven approach to each Service Level Assessment. These assessments were designed to evaluate the operational performance of key cost centers, comparing them to national and Citygate team best practices and standards, and ensuring they met the needs of the OCFA, its employees, and its agency customers. Each SLA was a stand-alone report that meticulously covered the elements assessed, operational metrics, and highlighted strengths and areas of opportunity.

Citygate's expertise in management consulting was evident through their thorough and forensic analysis, effective project process flow, and consistent communication. Throughout the duration of their work, they maintained regular updates and engagement, ensuring that all stakeholders were well-informed of the progress and findings. Their findings and recommendations have laid the groundwork for organizational improvement and efficiency while providing exceptional service to our customers and continue to be phased in today.

Most recently, Citygate was retained to provide an updated OCFA Standards of Coverage due to an increase in OCFA's jurisdictional boundaries and response. Citygate maintained the same exceptional standards that they previously provided with the added bonus and scope of providing mentorship and expertise to OCFA staff, ensuring that future Standards of Coverage studies could be completed by OCFA with the same level of forensic analysis and expertise that Citygate was able to provide. This project is currently wrapping up.

The original scope of work for the SLA was completed between February 2019 to August 2020. OCFA has continued its relationship with Citygate for ongoing projects to date.

If you have further questions, please contact the undersigned.

Sincerely,

Brian Fennessy
Fire Chief

CITY OF GLENDALE, CALIFORNIA
FIRE DEPARTMENT
OFFICE OF THE FIRE CHIEF

421 Oak Street
Glendale, California 91204-1298
(818) 548-3313

January 14, 2025

Project: Fire Services Master Plan

Project Date: Appx. July 2023 to April 2024

To whom it may concern:

The Glendale Fire Department hired Citygate Associates to conduct a fire services Master Plan in 2023. The study included a complete, in-depth Standards of Cover and Community Risk Assessment, a headquarters services analysis, fleet services review, and a facilities assessment.

Simply stated, from A to Z, the experience with Citygate was top shelf! Citygate's team was professional, exceptionally qualified, and they took the time to really understand the needs of our department. Particularly valuable to us at the time were their work with our response data and the facilities assessment. However, they were tremendously helpful to our department in all aspects of the study. Their findings and recommendations were analytical, solution oriented, and are key to some great improvements in our future.

We were so pleased with Citygate's service that we have since hired them again to assist us with our Strategic Plan.

If you're looking for a firm that knows fire services, how to provide a truly comprehensive analysis, and how to achieve real results, then I highly recommend Citygate Associates.

Sincerely,

Fire Chief Gregory F. Fish

Cy-Fair Fire Department

10710 Telge Road, Houston, Texas, 77095 Tel: (281) 550-6663 Fax: (281) 550-7288

January 15, 2025

RE: Letter of Reference for Citygate Associates, LLC

To Whom It May Concern:

I am writing to strongly recommend Citygate Associates, LLC, based on their outstanding work with the Cy-Fair Fire Department. As Fire Chief, I have direct knowledge of Citygate's expertise in conducting comprehensive fire service analyses and their successful administration of similar programs.

In September 2022, Citygate conducted a Master Plan, Risk Assessment, Standard of Cover (SOC), and Compliance Audit for our department. Their work demonstrated exceptional expertise in the following areas:
- Implementation of a thorough eight-element Standards of Coverage methodology aligned with CPSE-CFAI standards
- Utilization of advanced GIS and data analysis tools, including ESRI ArcGIS and StatsFD™, to evaluate deployment and response times
- Integration of innovative traffic congestion modeling to assess response time impacts during peak periods
- Comprehensive risk assessment incorporating NFPA guidelines, ISO requirements, and state-specific regulations
- Development of data-driven, implementable recommendations tailored to our local needs and fiscal resources

The Citygate team demonstrated particular strengths in:
- Bringing seasoned fire service administration expertise
- Utilizing state-of-the-art deployment analysis methods
- Providing specific, actionable recommendations
- Delivering thorough documentation and coaching to ensure sustainable improvements
- Conducting detailed compliance audits against applicable state and federal standards

Their work product was exceptional, incorporating all current industry best practices while remaining practical and achievable within our operational constraints.

Based on my experience working with Citygate, I can confidently attest to their capabilities in conducting Standards of Cover analyses and Community Risk Assessments. Their methodical approach, technical expertise, and practical recommendations make them highly qualified for similar projects.

Sincerely,

Amy Ramon

Amy Ramon
Fire Chief

VILLAGE OF NORTHBROOK
PROFESSIONAL SERVICES AGREEMENT
FOR POLICE DEPARTMENT STAFFING AND ORGANIZATIONAL PLANNING SERVICES

THIS AGREEMENT (***"Agreement"***) is dated as of the ____ day of _____, 2025 (***"Effective Date"***) and is by and between the Village of Northbrook, an Illinois home rule municipal corporation (***"Village"***), and Citygate Associates, LLC, a California limited liability company (***"the Consultant"***) (collectively, the ***"Parties"***).

IN CONSIDERATION OF the agreements set forth in this Agreement, the receipt and sufficiency of which are mutually acknowledged, and pursuant to the Village's home rule and statutory powers, the Parties agree as follows:

SECTION 1. SCOPE AND PROVISION OF SERVICES.

A. Engagement of the Consultant. The Village hereby engages the Consultant to provide all necessary professional consulting services and to perform the work in connection with the project described as follows: an analysis of the Police Department's current staffing and service delivery levels and methods and to make strategic recommendations for future programming, staffing, and service levels within anticipated budgetary resources. (collectively, the ***"Services"***).

B. Services. The Consultant has submitted to the Village a description of the Services to be provided by the Consultant, a copy of which is attached as ***Exhibit A*** to this Agreement (***"Scope of Services"***). The Consultant must provide the Services pursuant to the terms and conditions of this Agreement and as described more fully in the Scope of Services.

C. Commencement; Time of Performance. The Consultant will commence the Services immediately upon receipt of written notice from the Village that this Agreement has been fully executed by the Parties (***"Commencement Date"***). The Consultant will diligently and continuously prosecute the Services until the completion of the Services or the termination of this Agreement***, but in no event later than April 30, 2026*** (***"Time of Performance"***).

D. Reporting. The Consultant will regularly report to the Village Manager or her designee regarding the progress of the Services during the term of this Agreement.

E. Relationship of the Parties. The Consultant will act as an independent contractor in providing and performing the Services. Nothing in, nor done pursuant to, this Agreement will be construed to: (i) create the relationship of principal and agent, employer and employee, partners, or joint venturers between the Village and the Consultant; or (ii) create any relationship between the Village and any subcontractor of the Consultant.

F. Information Releases. The Consultant will not issue any news releases or other public statements regarding the Services without prior approval from the Village.

G. Mutual Cooperation. The Village will cooperate with the Consultant in the performance of the Services, including meeting with the Consultant and providing the Consultant with any non-confidential information that the Village may have that may be relevant and helpful to the Consultant's performance of the Services. The Consultant agrees to cooperate with the Village in the performance of the Services to complete the Work and with any other the Consultants engaged by the Village.

H. Compliance with Laws and Grants.

1. The Consultant will give all notices, pay all fees, and take all other actions that may be necessary to ensure that the Services are provided, performed, and completed in accordance with all required governmental permits, licenses, or other approvals and authorizations that may be required or necessary in connection with providing, performing, and completing the Services, and with all applicable statutes, ordinances, rules, and regulations, including without limitation the Fair Labor Standards Act; any statutes regarding qualification to do business; any statutes prohibiting discrimination because of, or requiring affirmative action based on, race, creed, color, national origin, age, sex, or other prohibited classification, including, without limitation, the Americans with Disabilities Act of 1990, 42 U.S.C. §§ 12101 *et seq*., and the Illinois Human Rights Act, 775 ILCS 5/1-101 *et seq*. The Consultant will also comply with all conditions of any federal, state, or local grant received by Village or the Consultant with respect to this Agreement or the Services.

2. The Consultant will be solely liable for any fines or civil penalties that are imposed by any governmental or quasi-governmental agency or body that may arise, or be alleged to have arisen, out of or in connection with the Consultant's, or its subcontractors', performance of, or failure to perform, the Services or any part of the Services.

SECTION 2. COMPENSATION AND METHOD OF PAYMENT.

A. Compensation. The total amount billed by the Consultant for the Services under this Agreement will not exceed $99,508 (***"Compensation"***), as outlined in the Scope of Services**,** including reimbursable expenses as identified in the Scope of Services, without the prior express written authorization of the Village.

B. Invoices and Payment. The Consultant will be paid as provided in the Scope of Services. The Consultant will submit invoices to the Village in an approved format for those portions of the Services performed and completed by the Consultant. The Village will pay to the Consultant the amount billed in accordance with the Illinois Prompt Payment Act, 50 ILCS 505/1 *et seq.*

C. Records. The Consultant will maintain records showing actual time devoted and costs incurred, and will permit the authorized representative of the Village to inspect and audit all data and records of the Consultant for work done under this Agreement. The records required to be made available to the Village under this Section 2.C will be made available at reasonable times during the term of this Agreement, and for five years after the termination of this Agreement.

D. Claim in Addition to Compensation. If the Consultant claims a right to additional compensation as a result of action taken by the Village, the Consultant must provide written notice to the Village of the claim within seven days after occurrence of the action, and no claim for additional compensation will be valid unless made in accordance with this Section 2.D. Any changes in the Compensation will be valid only upon written amendment pursuant to Section 10.A

of this Agreement. Regardless of the decision of the Village relative to a claim submitted by the Consultant, the Consultant will proceed with all of the Services required to complete the Services under this Agreement as determined by the Village without interruption.

E. Taxes, Benefits, Royalties. The Compensation includes all applicable federal, state, and local taxes of every kind and nature applicable to the Services, including, without limitation, all taxes, contributions, and premiums for unemployment insurance, old age or retirement benefits, pensions, annuities, or similar benefits and all costs, royalties and fees arising from the use on, or the incorporation into, the Services, of patented or copyrighted equipment, materials, supplies, tools, appliances, devices, processes, or inventions. The Consultant waives and releases any claim or right to claim additional compensation by reason of the payment of any tax, contribution, premium, costs, royalties, or fees.

F. Completion and Acceptance of Services. The Services, and any phase of the Services, will be considered complete on the date of final written acceptance by the Village of the Services or each phase of the Services, as the case may be.

G. Additional Services. The Village will not be liable for any costs incurred by the Consultant in connection with any services provided by the Consultant that are outside the scope of this Agreement (***"Additional Services"***), regardless of whether the Additional Services are requested or directed by the Village, except upon the prior written consent of the Village Manager after approval in accordance with applicable procedures.

H. No Additional Obligation. The Village is under no obligation under this Agreement or otherwise to negotiate or enter into any other or additional contracts or agreements with the Consultant, or with any vendor solicited or recommended by the Consultant.

SECTION 3. PERSONNEL; SUBCONTRACTORS.

A. Key Project Personnel. The employees, officials, and personnel of the Consultant described in the Scope of Services (***"Key Project Personnel"***), if any, will be primarily responsible for carrying out the Services on behalf of the Consultant. The Key Project Personnel may not be changed without the Village's prior written approval. The Consultant will notify the Village as soon as practicable prior to terminating the employment of, reassigning, or receiving notice of the resignation of, any Key Project Personnel. The Consultant will have no claim for damages and may not bill the Village for additional time and materials charges as the result of any portion of the Services that must be duplicated or redone due to termination or for any delay or extension of the Time of Performance as a result of any termination, reassigning, or resignation.

B. Availability of Personnel. The Consultant will provide all personnel necessary to complete the Services including, without limitation, any Key Project Personnel identified in this Agreement or in the Scope of Services.

C. Approval and Use of Subcontractors. The Consultant will perform the Services with its own personnel and under the management, supervision, and control of its own organization, unless otherwise approved by the Village in writing. All subcontractors and subcontracts used by the Consultant will be acceptable to, and approved in advance by, the Village. The Village's approval of any subcontractor or subcontract will not relieve the Consultant of full responsibility and liability for the provision, performance, and completion of the Services as required by this Agreement. All Services performed under any subcontract will be subject to all of the provisions of this Agreement in the same manner as if performed by employees of the Consultant. For

purposes of this Agreement, the term "Consultant" will be deemed also to refer to all subcontractors of the Consultant, and every subcontract will include a provision binding the subcontractor to all provisions of this Agreement.

D. Removal of Personnel and Subcontractors. If any personnel or subcontractor fails to perform the Services in a manner satisfactory to the Village, then, immediately upon notice from the Village, the Consultant will remove and replace the personnel or subcontractor. The Consultant will have no claim for damages, for compensation in excess of the amount contained in this Agreement or for a delay or extension of the Time of Performance as a result of any removal or replacement.

SECTION 4. TERM OF AGREEMENT.

A. Term. The term of this Agreement, unless terminated pursuant to the terms of this Agreement, will expire on the date the Village determines that all of the Services under this Agreement, including warranty services, are completed. A determination of completion will not constitute a waiver of any rights or claims that the Village has, before or after completion, with respect to any breach of this Agreement by the Consultant or any right of indemnification of the Village by the Consultant.

B. Termination. Notwithstanding any other provision hereof, the Village may terminate this Agreement, at any time and for any reason, upon seven days prior written notice to the Consultant. In the event that this Agreement is so terminated, the Consultant will be paid for Services actually performed and reimbursable expenses actually incurred, if any, prior to termination, not exceeding the value of the Services completed as determined as provided in the Scope of Services.

SECTION 5. CONFIDENTIAL INFORMATION; OWNERSHIP OF WORK PRODUCT AND DOCUMENTS.

A. Confidential Information. In the performance of this Agreement, the Consultant may have access to or receive certain information in the possession of the Village that is not generally known to members of the public (***"Confidential Information"***). Confidential Information includes, without limitation, proprietary information, copyrighted material, personal or private data of every kind, financial information, health records and information, maps, and all other information of a personal nature. The Consultant must not use or disclose any Confidential Information without the prior written consent of the Village. If the Consultant has any doubt about the confidentiality of any information, then the Consultant must seek a determination from the Village regarding the confidentiality of the information. The Consultant and all of its personnel and subcontractors must make and apply all safeguards necessary to prevent the improper use or disclosure of any Confidential Information. At the expiration or termination of this Agreement, the Consultant must promptly cease using, and must return or destroy (and certify in writing destruction of), all Confidential Information, including all copies, whether physical or in any other form, in its possession. The Consultant may not transfer to, store in, or otherwise allow work product containing Confidential Information to be located in any location, whether physical or digital, not under the control of the Consultant. If the Consultant is required, by any government authority or court of competent jurisdiction, to disclose any Confidential information, the Consultant must immediately give notice to the Village with the understanding that the Village will have the opportunity to contest the process by any means available to it prior to submission of any documents to a court or other third party. The Consultant must cause all of its personnel and

subcontractors to undertake and abide by the same obligations regarding Confidential Information as the Consultant.

B. Ownership. The Consultant agrees that all work product, in any form, prepared, collected, or received by the Consultant in connection with any or all of the Services to be performed under this Agreement will be and remain the exclusive property of the Village. At the Village's request, or upon termination of this Agreement, the Consultant will cause the work product to be promptly delivered to the Village. Any outstanding payment obligations may not be used as a basis to withhold work product. The Consultant agrees that, to the extent permitted by law, any and all work product will exclusively be deemed "works for hire" within the meaning and purview of the United States Copyright Act, 17 U.S.C. § 101 et seq subject to the terms of this Agreement. To the extent any work product does not qualify as a "work for hire," the Consultant irrevocably grants, assigns, and transfers to the Village all right, title, and interest in and to the work product in all media throughout the world in perpetuity and all intellectual property rights therein, free and clear of any liens, claims, or other encumbrances, to the fullest extent permitted by law. All intellectual property, Confidential Information, and work product will at all times be and remain the property of the Village. The Consultant will execute all documents and perform all acts that the Village may request in order to assist the Village in perfecting or protecting its rights in and to the work product and all intellectual property rights relating to the work product. All of the foregoing items will be delivered to the Village upon demand at any time and in any event, will be promptly delivered to the Village upon expiration or termination of this Agreement within three days after a demand. In addition, the Consultant will return the Village's data in the format requested by the Village. If any of the above items are lost or damaged while in the Consultant's possession, those items will be restored or replaced at the Consultant's expense.

C. Freedom of Information Act and Local Records Act. The Consultant acknowledges that this Agreement, all documents submitted to the Village related to this Agreement, and records in the possession of the Consultant related to this Agreement or the Services may be a matter of public record and may be subject to the Illinois Freedom of Information Act, 5 ILCS 140/1 *et seq*., and any other comparable state or federal laws now existing or adopted later (collectively, the ***"Disclosure Laws"***). In the event that the Village requests records from the Consultant, the Consultant shall promptly cooperate with the Village to enable the Village to meet all of its obligations under the applicable Disclosure Law. The Consultant acknowledges and agrees that the determination as to whether information in the records is exempt from disclosure or should be released to the public will be made by the Village in its sole and absolute discretion.

D. Injunctive Relief. In the event of a breach or threatened breach of this Section 5, the Village may suffer irreparable injury not compensable by money damages and would not have an adequate remedy at law. Accordingly, the Consultant agrees that the Village will be entitled to seek immediate injunctive relief to prevent or curtail any breach, threatened or actual. The rights provided under this Section 5.D are in addition and without prejudice to any rights that the Village may have in equity, by law or statute. The Consultant will fully cooperate with the Village in identifying the scope of any improper use or dissemination of data protected by this Section 5 and will assist the Village in any notification efforts required by law.

SECTION 6. WARRANTY.

The Consultant warrants that the Services will be performed in accordance with the highest standards of professional practice, care, skill, and diligence practiced by recognized consulting firms or licensed and accredited professionals in performing services of a similar

nature. This warranty is in addition to any other warranties expressed in this Agreement, or expressed or implied by law, which are reserved unto the Village. Any of the Services required by law or by this Agreement to be performed by licensed professionals will be performed by professionals licensed by the State of Illinois to practice in the applicable professional discipline.

SECTION 7. CONSULTANT REPRESENTATIONS.

A. Ability to Perform. represents that it is financially solvent, has the necessary financial resources, has sufficient experience and competence, and has the necessary capital, facilities, organization, and staff necessary to provide, perform, and complete the Services in accordance with this Agreement and in a manner consistent with the standards of professional practice by recognized consulting firms providing services of a similar nature.

B. Authorization. The execution, delivery and performance by the Consultant of this Agreement has been duly authorized by all necessary corporate action, and does not and will not violate its organizational documents, as amended and supplemented, any of the applicable requirements of law, or constitute a breach of or default under, or require any consent under, any agreement, instrument, or document to which the Consultant is now a party or by which the Consultant is now or may become bound.

C. Company Background. The information disclosed by the Consultant regarding its corporate structure, financial condition, expertise, and experience is true and correct. The Consultant will promptly notify Village in writing of any material change to or about the Consultant, including without limitation to change in ownership or control, and any change will be subject to Village approval which will not be unreasonably withheld.

D. Conflict of Interest. The Consultant represents and certifies that, to the best of its knowledge: (1) no Village employee, official, or agent has an interest in the business of the Consultant or this Agreement; (2) as of the date of this Agreement, neither the Consultant nor any person employed or associated with the Consultant has any interest that would conflict in any manner or degree with the performance of the obligations under this Agreement; and (3) neither the Consultant nor any person employed by or associated with the Consultant will at any time during the term of this Agreement obtain or acquire any interest that would conflict in any manner or degree with the performance of the obligations under this Agreement.

E. No Collusion. The Consultant represents and certifies that the Consultant is not barred from contracting with a unit of state or local government as a result of (i) a delinquency in the payment of any tax administered by the Illinois Department of Revenue unless the Consultant is contesting, in accordance with the procedures established by the appropriate revenue act, its liability for the tax or the amount of the tax, as set forth in Section 11-42.1-1 *et seq.* of the Illinois Municipal Code, 65 ILCS 5/11-42.1-1 *et seq.*; or (ii) a violation of either Section 33E-3 or Section 33E-4 of Article 33E of the Criminal Code of 2012, 720 ILCS 5/33E-1 *et seq. The Consultant* represents that the only persons, firms, or corporations interested in this Agreement as principals are those disclosed to the Village prior to the execution of this Agreement, and that this Agreement is made without collusion with any other person, firm, or corporation. If at any time it is found that the Consultant has, in procuring this Agreement, colluded with any other person, firm, or corporation, then the Consultant will be liable to the Village for all loss or damage that the Village may suffer, and this Agreement will, at the Village's option, be null and void.

F. Sexual Harassment Policy. The Consultant certifies that it has a written sexual harassment policy in full compliance with Section 2-105(A)(4) of the Illinois Human Rights Act, 775 ILCS 5/2-105(A)(4).

G. No Default. The Consultant is not in arrears to the Village under any debt or contract and is not in default as surety, contractor, or otherwise to any person, unless as disclosed the Village in writing.

H. No Legal Actions Preventing Performance. As of the Effective Date, the Consultant has no knowledge of any action, suit, proceeding, claim or investigation pending or to its knowledge threatened against the Consultant in any court, or by or before any federal, state, municipal, or governmental department, commission, board, bureau, agency, or instrumentality, domestic or foreign, or before any arbitrator of any kind, that, if adversely determined, would materially affect the Consultant's ability to perform its obligation under this Agreement.

I. Patriot Act Compliance. The Consultant represents and warrants to the Village that neither the Consultant nor any of its principals, shareholders, or other employees or officials (collectively ***"Personnel"***) is a person or entity named as a Specially Designated National and Blocked Person (as defined in Presidential Executive Order 13224) and that it is not acting, directly or indirectly, for or on behalf of a Specially Designated National and Blocked Person. The Consultant further represents and warrants that the Consultant and its Personnel are not directly or indirectly engaged in or facilitating transactions related to this Agreement on behalf of any person or entity named as a Specially Designated National and Blocked Person. The Consultant must, and will, defend, indemnify, and hold harmless the Village and its officials, officers, authorities, and all Village elected or appointed officials, officers, employees, agents, representatives, and attorneys from and against every claim, damage, loss, risk, liability, and expense (including attorneys' fees and costs) arising from or related to any breach of the representations and warranties in this Section 7.I.

SECTION 8. INDEMNIFICATION; INSURANCE; NO PERSONAL LIABILITY.

A. Indemnification. The Consultant agrees to, and does hereby, hold harmless and indemnify the Village and all Village elected or appointed officials, officers, employees, agents, representatives, engineers, and attorneys, from any and all claims that may be asserted at any time against any of those parties in connection with this Agreement or the Consultant's performance, or failure to perform, all or any part of the Services; provided, however, that this indemnity does not, and will not, apply to willful misconduct or gross negligence on the part of the Village.

B. Insurance. Contemporaneous with the Consultant's execution of this Agreement, the Consultant will provide certificates of insurance, all with coverages and limits acceptable to the Village, and the Consultant must provide certificates of insurance, endorsements, and insurance policies acceptable to the Village and including at least the minimum insurance coverage and limits set forth in **Exhibit B** to this Agreement. For good cause shown by the Consultant, the Village may extend the time for submission of the required certificates, endorsements, and policies and may impose deadlines or other terms to assure compliance with this Section 8.B. Each certificate and endorsement must be in a form acceptable to the Village and from a company with a general rating of A minus, and a financial size category of Class X or better, in Best's Insurance Guide. Each insurance policy must provide that no change, modification, or cancellation of any insurance will become effective until the expiration of 30 days after written notice of the change, modification in, or cancellation will have been given by the insurance

company to the Village (10 days' written notice in the event of cancelation due to the Consultant's non-payment of premium). The Consultant must maintain and keep in force, at all times during the term of this Agreement and at the Consultant's expense, the insurance coverage provided in this Section 8.B and **Exhibit B**, including without limitation at all times while correcting any failure to meet the warranty requirements of Section 6 of this Agreement.

C. No Personal Liability. No elected or appointed official, or employee of the Village will be personally liable, in law or in contract, to the Consultant as the result of the execution and performance of this Agreement.

SECTION 9. DEFAULT.

A. Default. If the Village determines that the Consultant has failed or refused to properly undertake the Services with diligence, or has delayed in the undertaking of, the Services with diligence at a rate that assures completion of the Services in full compliance with the requirements of this Agreement, or has otherwise failed, refused, or delayed to perform or satisfy the Services or any other requirement of this Agreement (***"Event of Default"***), and fails to cure any the Event of Default within ten days after the Consultant's receipt of written notice of the Event of Default from the Village, then the Village will have the right, notwithstanding the availability of other remedies provided by law or equity, to pursue any one or more of the remedies provided for under Section 9.B of this Agreement.

B. Remedies. In case of any Event of Default, the Village may pursue the following remedies:

1. Cure by the Consultant**.** The Village may require the Consultant, within a reasonable time, to complete or correct all or any part of the Services that are the subject of the Event of Default; and to take any or all other action necessary to bring the Consultant and the Services into compliance with this Agreement;

2. Termination of Agreement. The Village may terminate this Agreement and, notwithstanding anything in Section 3.C. of this Agreement, the Village will not have any liability for further payment of amounts due or to become due under this Agreement;

3. Withholding of Payment**.** The Village may withhold from any payment, whether or not previously approved, or may recover from the Consultant, any and all costs, including attorneys' fees and administrative expenses, incurred by the Village as the result of any Event of Default by the Consultant or as a result of actions taken by the Village in response to any Event of Default by the Consultant.

SECTION 10. GENERAL PROVISIONS.

A. Amendment. No amendment to this Agreement will be effective unless and until the amendment is in writing, properly approved in accordance with applicable procedures, and executed.

B. Assignment. Neither Party may assign their rights or obligations under this Agreement without the prior written consent of the other party.

C. Village Actions, Consents, and Approvals. Any action, consent, or approval needed to be taken or given under this Agreement by the Village may only be performed by the Village Manager or their designee, to the extent provided for by law.

D. Binding Effect. The terms of this Agreement bind and inure to the benefit of the Parties and their agents, successors, and assigns.

E. Notice. Any notice required to be given under this Agreement must be in writing and must be delivered (i) personally, (ii) by a reputable overnight courier, (iii) by certified mail, return receipt requested, and deposited in the U.S. Mail, postage prepaid, or (iv) by E-mail. E-mail notices will be deemed valid and received by the addressee only upon explicit or implicit acknowledgment of receipt by the addressee. Unless otherwise expressly provided in this Agreement, notices will be deemed received upon the earlier of (a) actual receipt; (b) one business day after deposit with an overnight courier as evidenced by a receipt of deposit; or (c) three business days following deposit in the U.S. mail, as evidenced by a return receipt. By notice complying with the requirements of this Section 10.E, each party will have the right to change the address or the addressee, or both, for all future notices to the other party, but no notice of a change of addressee or address will be effective until actually received.

Notices to the Village will be addressed to, and delivered at, the following address:

Village of Northbrook
1225 Cedar Lane
Northbrook, Illinois 60062
Attention: Cara Pavlicek, Village Manager
E-mail: Cara.Pavlicek@northbrook.il.us

With a copy to:

Elrod Friedman LLP
350 North Clark Street, 2nd Floor
Chicago, Illinois 60654
Attention: Steven M. Elrod
E-mail: Steven.Elrod@ElrodFriedman.com

Notices to the Consultant will be addressed to, and delivered at, the following address:

Citygate Associates, LLC
111 Woodmere Road, Suite 170
Folsom, CA 95630
Attention: Chad Jackson
Email: cjackson@citygateassociates.com

F. Third Party Beneficiary. The provisions of this Agreement are and will be for the benefit of the Consultant and Village only and are not for the benefit of any third party, and accordingly, no third party shall have the right to enforce the provisions of this Agreement. The Village will not be liable to any vendor or other third party for any agreements made by the Consultant, purportedly on behalf of the Village, without the knowledge and approval of the Village Trustees.

G. Severability. If any term, covenant, condition, or provision of this Agreement is held by a court of competent jurisdiction to be invalid, void, or unenforceable, the Village will have the right, in its sole and absolute discretion, to determine if (i) the remainder of the provisions of this Agreement will remain in full force and effect and will in no way be affected, impaired, or invalidated, or (ii) the entire agreement shall be invalid, void, and unenforceable.

H. Time of the Essence. Time is of the essence in the performance of this Agreement.

I. Governing Laws. This Agreement will be interpreted according to the internal laws, but not the conflict of laws rules, of the State of Illinois.

J. Venue. Exclusive jurisdiction with regard to the any actions or proceedings arising from, relating to, or in connection with this Agreement will be in the Circuit Court of Cook County, Illinois or, where applicable, in the federal court for the Northern District of Illinois. The Parties waive their respective right to transfer or change the venue of any litigation filed in the Circuit Court of Cook County, Illinois.

K. Entire Agreement. This Agreement constitutes the entire agreement between the parties and supersedes any and all previous or contemporaneous oral or written agreements and negotiations between the Village and the Consultant with respect to the Scope of Services and the Services.

L. Non-Waiver. No waiver of any provision of this Agreement will be deemed to or constitute a waiver of any other provision of this Agreement (whether or not similar) nor will any waiver be deemed to or constitute a continuing waiver unless otherwise expressly provided in this Agreement.

M. Exhibits. Exhibits A and **B** attached to this Agreement are, incorporated in and made a part of this Agreement. In the event of a conflict between any Exhibit and the text of this Agreement, the text of this Agreement will control.

N. Rights Cumulative. Unless expressly provided to the contrary in this Agreement, each and every one of the rights, remedies, and benefits provided by this Agreement will be cumulative and will not be exclusive of any other rights, remedies, and benefits allowed by law.

O. Consents. Unless otherwise provided in this Agreement, whenever the consent, permission, authorization, approval, acknowledgement, or similar indication of assent of any party to this Agreement, or of any duly authorized officer, employee, agent, or representative of any party to this Agreement, is required in this Agreement, the consent, permission, authorization, approval, acknowledgement, or similar indication of assent must be in writing.

P. Interpretation. This Agreement will be construed without regard to the identity of the Party which drafted the various provisions of this Agreement. Every provision of this Agreement will be construed as though all Parties to this Agreement participated equally in the drafting of this Agreement. Any rule or construction that a document is to be construed against the drafting party will not be applicable to this Agreement.

Q. Survival. The provisions of Sections 5 and 8 will survive the termination or expiration of the Agreement.

R. Calendar Days; Calculation of Time Periods. Unless otherwise specific in this Agreement, any reference to days in this Agreement will be construed to be calendar days. Unless otherwise specified, in computing any period of time described in this Agreement, the day of the act or event on which the designated period of time begins to run is not to be included and the last day of the period so computed is to be included, unless the last day is a Saturday, Sunday or legal holiday under the laws of the State in which the Property is located, in which event the period shall run until the end of the next day which is neither a Saturday, Sunday or legal holiday. The final day of any period will be deemed to end at 5:00 p.m., Central time.

S. Counterpart Execution. This Agreement may be executed in several counterparts, each of which, is deemed to be an original, but all of which together will constitute one and the same instrument.

ATTEST:

By: _____
Village Clerk

VILLAGE OF NORTHBROOK

By: _____
Village Manager

ATTEST:

By: Kelly Haeen

Title: Treasurer

CONSULTANT

By: Chad Jackson

Its: President

EXHIBIT A

PROPOSAL

[TO BE PREPARED BY THE CONSULTANT AND ACCEPTABLE TO VILLAGE]

[WILL INCLUDE SCHEDULE]

EXHIBIT B

INSURANCE COVERAGES

A. Worker's Compensation and Employer's Liability with limits not less than:

(1) Worker's Compensation: Statutory;

(2) Employer's Liability:

$500,000 injury-per occurrence

$500,000 disease-per employee

$500,000 disease-policy limit

Insurance will evidence that coverage applies in the State of Illinois.

B. Comprehensive Motor Vehicle Liability with a combined single limit of liability for bodily injury and property damage of not less than $1,000,000 for vehicles owned, non-owned, or rented.

All employees will be included as insureds.

C. Comprehensive General Liability with coverage written on an "occurrence" basis and with limits no less than:

$2,000,000 Bodily Injury and Property Damage Combined Single Limit

Coverage is to be written on an "occurrence" basis.

Coverages will include:

- Broad Form Property Damage Endorsement
- Blanket Contractual Liability (must expressly cover the indemnity provisions of this Agreement)

D. Professional Liability Insurance. With a limit of liability of not less than $1,000,000 per occurrence and $2,000,000 in the aggregate and covering the Consultant against all sums that the Consultant may be obligated to pay on account of any liability arising out of this Agreement.

E. Umbrella Policy. The required coverages may be in any combination of primary, excess, and umbrella policies. Any excess or umbrella policy must provide excess coverage over underlying insurance on a following-form basis so that when any loss covered by the primary policy exceeds the limits under the primary policy, the excess or umbrella policy becomes effective to cover the loss.

F. Owner as Additional Insured. Village will be named as an Additional Insured on all policies except for:

Worker's Compensation

Professional Liability

Each additional Insured endorsement will identify Village as follows: Village of Northbrook including its Board members and elected and appointed officials, its officers, employees, agents, attorneys, the Consultants, and representatives.

G. Other Parties as Additional Insureds. In addition to Village, the following parties will be named as additional insured on the following policies:

Additional Insured	Policy or Policies
_____	_____
_____	_____
_____	_____

GEOGRAPHIC INFORMATION SYSTEMS AND RECORDS MANAGEMENT SYSTEMS TECHNOLOGY RIDER

The Village has developed digital map information through Geographic Information Systems Technology (***"GIS Data"***) **and** Police Records information through Records Management System Technology **("RMS Data")** concerning the real property located within the Village and Police incident response information, respectively. If requested to do so by the Consultant, the Village agrees to supply the Consultant with a digital copy of the GIS Data, subject to the following conditions:

1. **Limited Access to GIS and RMS Data.** The GIS Data provided by the Village will be limited to the scope of the Work that the Consultant is to provide for the Village;

2. **Purpose of GIS and RMS Data.** The Consultant will limit its use of the GIS Data to its intended purpose of furtherance of the Work; and

3. **Agreement with Respect to GIS and RMS Data.**

a. **Trade Secrets of the Village.** The GIS and RMS Data constitutes proprietary materials and trade secrets of the Village and is the property of the Village;

b. **Consent of Village Required. The Consultant** may not provide or make available the GIS and RMS Data in any form to anyone without the prior written consent of the Village.

c. **Supply to Village.** At the request of the Village, the Consultant will provide the Village with all information that has been developed by the Consultant based on the GIS and RMS Data;

d. **No Guarantee of Accuracy.** The Village makes no guarantee as to the accuracy, completeness, or suitability of the GIS and RMS Data in regard to the Consultant's intended use of the GIS and RMS Data; and

e. **Discontinuation of Use.** At the time as the Services have been completed to the satisfaction of the Village, the Consultant will cease its use of the GIS and RMS Data for any purpose whatsoever; and, upon request, an authorized representative of the Village will be afforded sufficient access to the Consultant's premises and data processing equipment to verify that all use of the GIS and RMS Data has been discontinued.

CERTIFICATE OF LIABILITY INSURANCE

DATE (MM/DD/YYYY): 7/29/2025

THIS CERTIFICATE IS ISSUED AS A MATTER OF INFORMATION ONLY AND CONFERS NO RIGHTS UPON THE CERTIFICATE HOLDER. THIS CERTIFICATE DOES NOT AFFIRMATIVELY OR NEGATIVELY AMEND, EXTEND OR ALTER THE COVERAGE AFFORDED BY THE POLICIES BELOW. THIS CERTIFICATE OF INSURANCE DOES NOT CONSTITUTE A CONTRACT BETWEEN THE ISSUING INSURER(S), AUTHORIZED REPRESENTATIVE OR PRODUCER, AND THE CERTIFICATE HOLDER.

IMPORTANT: If the certificate holder is an ADDITIONAL INSURED, the policy(ies) must have ADDITIONAL INSURED provisions or be endorsed. If SUBROGATION IS WAIVED, subject to the terms and conditions of the policy, certain policies may require an endorsement. A statement on this certificate does not confer rights to the certificate holder in lieu of such endorsement(s).

PRODUCER
Inszone Insurance Services, LLC
2721 Citrus Road, Suite A
Rancho Cordova, CA 95742
License#: 0F82764

CONTACT NAME: Certificate Team
PHONE (A/C, No, Ext): 877-308-9663 **FAX (A/C, No):** 916-400-2625
E-MAIL ADDRESS: certs@inszoneins.com

INSURER(S) AFFORDING COVERAGE	NAIC #
INSURER A : Hartford Underwriters Insurance Company	30104
INSURER B : Certain Underwriter's at Lloyd's London	32727
INSURER C : Hartford Casualty Insurance Company	29424
INSURER D :	
INSURER E :	
INSURER F :	

INSURED
Citygate Associates, LLC
600 Coolidge Drive, Suite 150
Folsom, CA 95630
CITYASS-01

COVERAGES **CERTIFICATE NUMBER:** 395522489 **REVISION NUMBER:**

THIS IS TO CERTIFY THAT THE POLICIES OF INSURANCE LISTED BELOW HAVE BEEN ISSUED TO THE INSURED NAMED ABOVE FOR THE POLICY PERIOD INDICATED. NOTWITHSTANDING ANY REQUIREMENT, TERM OR CONDITION OF ANY CONTRACT OR OTHER DOCUMENT WITH RESPECT TO WHICH THIS CERTIFICATE MAY BE ISSUED OR MAY PERTAIN, THE INSURANCE AFFORDED BY THE POLICIES DESCRIBED HEREIN IS SUBJECT TO ALL THE TERMS, EXCLUSIONS AND CONDITIONS OF SUCH POLICIES. LIMITS SHOWN MAY HAVE BEEN REDUCED BY PAID CLAIMS.

INSR LTR	TYPE OF INSURANCE	ADDL INSD	SUBR WVD	POLICY NUMBER	POLICY EFF (MM/DD/YYYY)	POLICY EXP (MM/DD/YYYY)	LIMITS	
A	X **COMMERCIAL GENERAL LIABILITY** CLAIMS-MADE X OCCUR GEN'L AGGREGATE LIMIT APPLIES PER: X POLICY PRO-JECT LOC OTHER:	Y	Y	57SBABE5G1W	10/1/2024	10/1/2025	EACH OCCURRENCE DAMAGE TO RENTED PREMISES (Ea occurrence) MED EXP (Any one person) PERSONAL & ADV INJURY GENERAL AGGREGATE PRODUCTS - COMP/OP AGG 	$ 2,000,000 $ 1,000,000 $ 10,000 $ 2,000,000 $ 4,000,000 $ 4,000,000 $
A	**AUTOMOBILE LIABILITY** ANY AUTO OWNED AUTOS ONLY SCHEDULED AUTOS X HIRED AUTOS ONLY X NON-OWNED AUTOS ONLY			57SBABE5G1W	10/1/2024	10/1/2025	COMBINED SINGLE LIMIT (Ea accident) BODILY INJURY (Per person) BODILY INJURY (Per accident) PROPERTY DAMAGE (Per accident) 	$ 2,000,000 $ $ $ $
A	X **UMBRELLA LIAB** X OCCUR **EXCESS LIAB** CLAIMS-MADE DED X RETENTION $ $10,000	Y	Y	57SBABE5G1W	10/1/2024	10/1/2025	EACH OCCURRENCE AGGREGATE 	$ 4,000,000 $ 4,000,000 $
C	**WORKERS COMPENSATION AND EMPLOYERS' LIABILITY** ANYPROPRIETOR/PARTNER/EXECUTIVE OFFICER/MEMBER EXCLUDED? Y / N **(Mandatory in NH)** If yes, describe under DESCRIPTION OF OPERATIONS below	N / A	Y	57WECEU6620	10/1/2024	10/1/2025	X PER STATUTE OTH-ER E.L. EACH ACCIDENT E.L. DISEASE - EA EMPLOYEE E.L. DISEASE - POLICY LIMIT	 $ 1,000,000 $ 1,000,000 $ 1,000,000
B B	Professional Liability Errors and Omissions			PSN0540252602 PSN0540252602	2/14/2025 2/14/2025	2/14/2026 2/14/2026	Aggregate/Each Claim Aggregate/Each Claim	$5,000,000 $5,000,000

DESCRIPTION OF OPERATIONS / LOCATIONS / VEHICLES (ACORD 101, Additional Remarks Schedule, may be attached if more space is required)
Additional Insured on the General Liability. Primary and Non-Contributory on the General Liability. Waiver of Subrogation on the General Liability and Workers Compensation. Umbrella follows form, subject to the terms and conditions of the policy.

The aforementioned coverage is provided to the extent in the attached forms for: Village of Northbrook.

CERTIFICATE HOLDER

Village of Northbrook
Attention: Cara Pavlicek, Village Manager
1225 Cedar Lane
Northbrook, IL 60062

CANCELLATION

SHOULD ANY OF THE ABOVE DESCRIBED POLICIES BE CANCELLED BEFORE THE EXPIRATION DATE THEREOF, NOTICE WILL BE DELIVERED IN ACCORDANCE WITH THE POLICY PROVISIONS.

AUTHORIZED REPRESENTATIVE

© 1988-2015 ACORD CORPORATION. All rights reserved.

UMBRELLA LIABILITY SUPPLEMENTAL POLICY

UMBRELLA LIABILITY SUPPLEMENTAL POLICY
READ YOUR POLICY CAREFULLY

QUICK REFERENCE **Beginning on Page**

A. COVERAGES 1

1. Umbrella Liability Insurance 1
2. Exclusions 1

B. INVESTIGATION, DEFENSE, SETTLEMENT 8

C. WHO IS AN INSURED 8

D. LIMITS OF INSURANCE 10

E. CONDITIONS 11

1. Premium 11
2. Inspection And Audit 11
3. Duties In The Event Of Occurrence, Claim Or Suit 11
4. Assistance And Cooperation Of The Insured 12
5. Legal Action Against Us 12
6. Appeals 12
7. Other Insurance 13
8. Transfer Of Rights Of Recovery Against Others To Us 13
9. Changes 14
10. Separation Of Insureds 14
11. Maintenance Of Underlying Insurance 14
12. Cancellation 14
13. Nonrenewal 15
14. Workers' Compensation Agreement 15
15. Bankruptcy Or Insolvency of Insured 15
16. Representations Or Fraud 15

F. DEFINITIONS 15

© 2019, The Hartford
(May include copyrighted material of Insurance Services Office, Inc., with its permission)

UMBRELLA LIABILITY SUPPLEMENTAL POLICY

In this Supplemental Policy the words "you" and "your" refer to the Named Insured first shown in the Supplemental Policy Declarations and any other person or organization qualifying as a Named Insured under this Supplemental Policy. The words "we", "us" and "our" refer to the insurance company shown in the Supplemental Policy Declarations.

Other words and phrases that appear in quotation marks also have special meanings. Refer to Section **F. DEFINITIONS**.

IN RETURN FOR THE PAYMENT OF THE PREMIUM and in reliance upon the statements in the Supplemental Policy Declarations made a part hereof, and subject to all of the terms of this Supplemental Policy we agree with you as follows:

A. COVERAGES

1. Umbrella Liability Insurance

Insuring Agreement

a. We will pay those sums that the "insured" becomes legally obligated to pay as "damages" in excess of the "underlying insurance" or of the "self-insured retention" when no "underlying insurance" applies, because of "bodily injury", "property damage" or "personal and advertising injury" to which this insurance applies caused by an "occurrence". But, the amount we will pay as "damages" is limited as described in Section **D. LIMITS OF INSURANCE**.

No other obligation or liability to pay sums or perform acts or services is covered unless explicitly provided for under Section **B. INVESTIGATION, DEFENSE, SETTLEMENT**.

b. This insurance applies to "bodily injury", "property damage" or "personal and advertising injury" only if:

(1) The "bodily injury" or "property damage" occurs during the "policy period", or the “personal and advertising injury” is caused by an offense committed during the “policy period”; and

(2) Prior to the "policy period", no "insured" listed under Paragraph **1.** of Section **C. WHO IS AN INSURED** and no "employee" authorized by you to give or receive notice of an "occurrence" or claim, knew that the "bodily injury" or "property damage" had occurred, in whole or in part. If such a listed "insured" or authorized "employee" knew, prior to the "policy period", that the "bodily injury" or "property damage" occurred, then any continuation, change or resumption of such "bodily injury" or "property damage" during or after the "policy period" will be deemed to have been known prior to the "policy period".

c. "Bodily injury" or "property damage" will be deemed to have been known to have occurred at the earliest time when any "insured" listed under Paragraph **1.** of Section **C. WHO IS AN INSURED** or any "employee" authorized by you to give or receive notice of an "occurrence" or claim:

(1) Reports all, or any part, of the "bodily injury" or "property damage" to us or any other insurer;

(2) Receives a written or verbal demand or claim for "damages" because of the "bodily injury" or "property damage"; or

(3) Becomes aware by any other means that "bodily injury" or "property damage" has occurred or has begun to occur.

2. Exclusions

This Supplemental Policy does not apply to:

a. Pollution

Any obligation:

(1) To pay for the cost of investigation, defense or settlement of any claim or “suit” against any "insured" alleging actual or threatened injury or damage of any nature or kind to persons or property which arises out of or would not have occurred but for the “pollution hazard”; or

(2) To pay any "damages", judgments, settlements, loss, costs or expenses that may be awarded or incurred:

(a) By reason of any such claim or “suit” or any such injury or damage; or

(b) In complying with any action authorized by law and relating to such injury or damage.

© 2019, The Hartford
(May include copyrighted material of Insurance Services Office, Inc., with its permission)

EXCEPTION

This exclusion does not apply:

(a) To "bodily injury" to any of your "employees" arising out of and in the course of their employment by you; or

(b) To injury or damage as to which valid and collectible "underlying insurance" with at least the minimum limits shown in the Extension Schedule Of Underlying Insurance is in force and applicable to the "occurrence". In such event, any coverage afforded by this Supplemental Policy for the "occurrence" will be subject to the pollution exclusions of the "underlying insurance" and to the conditions, limits and other provisions of this Supplemental Policy. But, in the event that such valid and collectable "underlying insurance" is not maintained with limits of liability as set forth in the Extension Schedule Of Underlying Insurance, this Exception **(b)** does not apply.

(c) Exception **(b)** also does not apply to “bodily injury" or "property damage" arising out of the actual, alleged or threatened discharge, dispersal, seepage, migration, release or escape of "pollutants":

(i) That are, or that are contained in any property that is:

(aa) Being transported or towed by, or handled for movement into, onto or from, any "auto";

(bb) Otherwise in the course of transit by or on behalf of the "insured"; or

(cc) Being stored, disposed of, treated or processed in or upon any "auto";

(ii) Before the "pollutants" or any property in which the "pollutants" are contained are moved from the place where they are accepted by the "insured" for movement into or onto any "auto"; or

(iii) After the "pollutants" or any property in which the "pollutants" are contained are moved from any "auto" to the place where they are finally delivered, disposed of or abandoned by the "insured".

(d) Paragraph **(i)** above does not apply to fuels, lubricants, fluids, exhaust gases or other similar "pollutants" that are needed for or result from the normal electrical, hydraulic or mechanical functioning of an "auto", covered by the "underlying insurance" or its parts, if:

(i) The "pollutants" escape, seep, migrate, or are discharged or released directly from an "auto" part designed by its manufacturer to hold, store, receive or dispose of such "pollutants"; and

(ii) The "bodily injury", "property damage" or "covered pollution cost or expense" does not arise out of the operation of any equipment listed in Paragraphs **f.(2)** or **f.(3)**. of the definition of "mobile equipment".

(e) Paragraphs **(c)(ii)** and **(c)(iii)** above do not apply to "accidents" that occur away from premises owned by or rented to an "insured" with respect to "pollutants" not in or upon an "auto" covered by the "underlying insurance" if:

(i) The "pollutants" or any property in which the "pollutants" are contained are upset, overturned or damaged as a result of the maintenance or use of the "auto"; and

(ii) The discharge, dispersal, seepage, migration, release or escape of the "pollutants" is caused directly by such upset, overturn or damage.

b. Workers' Compensation And Similar Laws

Any obligation of the "insured" under a workers' compensation, disability benefits or unemployment compensation law or any similar law.

c. Contractual Liability

Liability assumed by the "insured" under any contract or agreement with respect to an "occurrence" taking place before the contract or agreement is executed.

d. Personal And Advertising Injury

"Personal and advertising injury".

(1) EXCEPTION

This exclusion does not apply to the extent that coverage for such "personal and advertising injury" is provided by "underlying insurance", but in no event shall any "personal and advertising injury" coverage

© 2019, The Hartford
(May include copyrighted material of Insurance Services Office, Inc., with its permission)

provided under this Supplemental Policy apply to any claim or "suit" to which "underlying insurance" does not apply. This **EXCEPTION** applies only to the extent that such coverage provided by the "underlying insurance" is maintained having limits as set forth in the Schedule Of Underlying Insurance.

When this **EXCEPTION** applies, the insurance provided under this Supplemental Policy for “personal and advertising injury” will follow the same provisions, exclusions and limitations that are contained in the applicable "underlying insurance", unless otherwise directed by this insurance.

This **EXCEPTION** does not apply to:

(a) Aircraft (Unmanned Aircraft)

"Personal and advertising injury" arising out of the ownership, maintenance, use or entrustment to others of any aircraft that is an "unmanned aircraft". Use includes operation and "loading or unloading".

This exclusion applies even if the claims against any "insured" allege negligence or other wrongdoing in the supervision, hiring, employment, training or monitoring of others by that "insured", if the "personal and advertising injury" arises out of the ownership, maintenance, use or entrustment to others of any aircraft that is an "unmanned aircraft".

However, this Paragraph **(a)** does not apply if the only allegation in the claim or "suit" involves an intellectual property right which is limited to:

(i) Infringement, in your "advertisement", of:

(aa) Copyright;

(bb) Slogan; or

(cc) Title of any literary or artistic work; or

(ii) Copying, in your "advertisement", a person's or organization's "advertising idea" or style of "advertisement"; or

(b) Access Or Disclosure Of Confidential Or Personal Information

"Personal and advertising injury" arising out of any access to or disclosure of any person's or organization's confidential or personal information, including patents, trade secrets, processing methods, customer lists, financial information, credit card information, health information or any other type of nonpublic information.

This exclusion applies even if damages are claimed for notification costs, credit monitoring expenses, forensic expenses, public relations expenses or any other loss, cost or expense incurred by you or others arising out of any access to or disclosure of any person's or organization's confidential or personal information.

e. Underlying Insurance

The amount of any injury or damage:

(1) Covered by "underlying insurance" but for any defense which any underlying insurer may assert because of the "insured's" failure to comply with any condition of its coverage part, policy, or endorsement; or

(2) For which damages would have been payable by "underlying insurance" but for the actual or alleged insolvency or financial impairment of an underlying insurer.

f. Aircraft (Other Than Unmanned Aircraft)

(1) "Bodily injury" or "property damage" arising out of the ownership, operation, maintenance, use, entrustment to others, or "loading or unloading" of any aircraft (other than "unmanned aircraft"):

(a) Owned by any "insured"; or

(b) Chartered or loaned to any "insured".

This exclusion applies even if the claims allege negligence or other wrongdoing in the supervision, hiring, employment, training or monitoring of others by an "insured", if the "bodily injury" or "property damage" arises out of the ownership, maintenance, use or entrustment to others of any aircraft (other than "unmanned aircraft") that is owned or operated by or rented or loaned to any "insured".

© 2019, The Hartford
(May include copyrighted material of Insurance Services Office, Inc., with its permission)

(2) This exclusion does not apply to aircraft (other than "unmanned aircraft") that is:

(a) Hired, chartered or loaned with a paid crew; but

(b) Not owned by any "insured".

(3) This exclusion does not apply to "bodily injury" to any of your "employees" arising out of and in the course of their employment by you.

g. Aircraft (Unmanned Aircraft)

"Bodily injury" or "property damage" arising out of the ownership, maintenance, use or entrustment to others of any aircraft that is an "unmanned aircraft". Use includes operation and "loading or unloading".

This exclusion applies even if the claims against any "insured" allege negligence or other wrongdoing in the supervision, hiring, employment, training or monitoring of others by that "insured", if the "bodily injury" or "property damage" arises out of the ownership, maintenance, use or entrustment to others of any aircraft that is an "unmanned aircraft".

h. Watercraft

"Bodily injury" or "property damage" arising out of the ownership, operation, maintenance, use, entrustment to others, "loading or unloading" of any watercraft.

This exclusion applies even if the claims allege negligence or other wrongdoing in the supervision, hiring, employment, training or monitoring of others by an "insured", if the "bodily injury" or "property damage" arises out of the ownership, maintenance, use or entrustment to others, of any watercraft that is owned or operated by or rented or loaned to, any "insured".

This exclusion does not apply to:

(1) Watercraft you do not own that is:

(a) Less than 51 feet long; and

(b) Not being used to carry persons or property for a charge;

(2) "Bodily injury" to any of your "employees" arising out of and in the course of their employment by you; or

(3) Any watercraft while ashore on premises owned by, rented to or controlled by you.

i. War

Any injury or damage, however caused, arising, directly or indirectly, out of:

(1) War, including undeclared or civil war;

(2) Warlike action by a military force, including action in hindering or defending against an actual or expected attack by any government, sovereign or other authority using military personnel or other agents; or

(3) Insurrection, rebellion, revolution, usurped power, or action taken by governmental authority in hindering or defending against any of these.

j. Damage To Property

"Property damage" to property you own.

k. Damage To Your Product

"Property damage" to "your product" arising out of it or any part of it.

l. Damage To Your Work

"Property damage" to "your work" arising out of it or any part of it and included in the "products-completed operations hazard".

This exclusion does not apply if the damaged work or the work out of which the damage arises was performed on your behalf by a subcontractor.

m. Damage To Impaired Property Or Property Not Physically Injured

"Property damage" to "impaired property" or property that has not been physically injured arising out of:

(1) A defect, deficiency, inadequacy or dangerous condition in "your product" or "your work"; or

(2) A delay or failure by you or anyone acting on your behalf to perform a contract or agreement in accordance with its terms.

© 2019, The Hartford
(May include copyrighted material of Insurance Services Office, Inc., with its permission)

This exclusion does not apply to the loss of use of other property arising out of sudden and accidental physical injury to "your product" or "your work" after it has been put to its intended use.

n. Recall Of Products, Work Or Impaired Property

Damages claimed for any loss, cost or expense incurred by you or others for the loss of use, withdrawal, recall, inspection, repair, replacement, adjustment, removal or disposal of:

(1) "Your product";

(2) "Your work"; or

(3) "Impaired property";

if such product, work or property is withdrawn or recalled from the market or from use by any person or organization because of a known or suspected defect, deficiency, inadequacy or dangerous condition in it.

o. Expected Or Intended

"Bodily injury" or "property damage" expected or intended from the standpoint of the "insured".

This exclusion does not apply to "bodily injury" or "property damage" resulting from the use of reasonable force to protect persons or property.

p. Employer's Liability

"Bodily injury" to:

(1) An "employee" of the "insured" arising out of and in the course of:

(a) Employment by the "insured"; or

(b) Performing duties related to the conduct

of the "insured's" business; or

(2) The spouse, child, parent, brother or sister of that "employee" as a consequence of Paragraph **(1)** above.

This exclusion applies whether the "insured" may be liable as an employer or in any other capacity, and to any obligation to share damages with or repay someone else who must pay damages because of the injury.

EXCEPTIONS:

This exclusion does not apply to liability assumed by the "insured" under an "insured contract".

With respect to injury arising out of an "auto" covered under the applicable "underlying insurance," this exclusion does not apply to "bodily injury" to domestic "employees" not entitled to workers' compensation benefits. For the purposes of this exclusion, a domestic "employee" is a person engaged in household or domestic work performed principally in connection with a residence premises.

This exclusion does not apply to the extent that valid "underlying insurance" for the employer's liability risks described above exists or would have existed but for the exhaustion of underlying limits for "bodily injury".

To the extent this exclusion does not apply, the insurance provided under this Supplemental Policy for the employer's liability risks described above will follow the same provisions, exclusions and limitations that are contained in the applicable "underlying insurance", unless otherwise directed by this insurance.

q. Property Damage To Employee's Property

With respect to coverage afforded any of your "employees", "property damage" to property owned or occupied by or rented or loaned to:

(1) That "employee";

(2) Any of your other "employees";

(3) Any of your partners or members (if you are a partnership or joint venture); or

(4) Any of your members (if you are a limited liability company).

r. First–Party Auto Or Mobile Equipment Coverages

Any claim arising out of or relating to an "auto" or "mobile equipment" for:

(1) Uninsured or underinsured motorists coverage;

(2) Personal injury protection;

© 2019, The Hartford
(May include copyrighted material of Insurance Services Office, Inc., with its permission)

(3) Auto medical payments coverage;

(4) First-party physical damage coverage; or

(5) Any similar no-fault coverage by whatever name called;

unless this Supplemental Policy is endorsed to provide such coverage.

s. Employment Practices Liability

Any injury or damage to:

(1) A person arising out of any:

(a) Refusal to employ that person;

(b) Termination of that person's employment; or

(c) Employment-related practices, policies, acts or omissions, such as coercion, demotion, evaluation, reassignment, discipline, defamation, harassment, humiliation, discrimination, malicious prosecution or false arrest directed at that person; or

(2) The spouse, child, parent, brother or sister of that person, as a consequence of "bodily injury" or "personal and advertising injury" to that person at whom any of the employment-related practices described in Paragraphs **(1)(a)**, **(1)(b)** or **(1)(c)** above is directed.

(3) This exclusion applies:

(a) Whether the injury-causing event described in Paragraphs **(1)(a)**, **(1)(b)** or **(1)(c)** above occurs before employment, during employment or after employment of that person;

(b) Whether the "insured" may be liable as an employer or in any other capacity; and

(c) To any obligation to share damages with or repay someone else who must pay damages because of the injury.

t. Employee Retirement Income Security Act

Any liability arising out of intentional or unintentional violation of any provision of the Employee Retirement Income Security Act of 1974, Public Law 93-406 (commonly referred to as the Revision Act of 1974), or any amendments to them.

u. Asbestos

Any injury, damages, loss, cost or expense, including but not limited to "bodily injury", "property damage" or "personal and advertising injury" arising out of, or relating to, in whole or in part, the "asbestos hazard" that:

(1) May be awarded or incurred by reason of any claim or "suit" alleging actual or threatened injury or damage of any nature or kind to persons or property which would not have occurred in whole or in part but for the "asbestos hazard"; or

(2) Arise out of any request, demand, order, or statutory or regulatory requirement that any "insured" or others test for, monitor, clean up, remove, encapsulate, contain, treat, detoxify or neutralize or in any way respond to or assess the effects of any "asbestos hazard"; or

(3) Arise out of any claim or "suit" for damages because of testing for, monitoring, cleaning up, removing, encapsulating, containing, treating, detoxifying or neutralizing or in any way responding to or assessing the effects of an "asbestos hazard".

v. Racing And Stunting Activities

"Bodily injury" or "property damage" arising out of the ownership, operation, maintenance, use, entrustment to others, or "loading or unloading" of an "auto" or "mobile equipment" while being used in any:

(1) Prearranged or organized racing, speed or demolition contest;

(2) Stunting activity; or

(3) Preparation for any such contest or activity.

w. Access Or Disclosure Of Confidential Or Personal Information And Data-Related Liability

(1) Damages because of "bodily injury" or "property damage" arising out of any access to or disclosure of any person's or organization's confidential or personal information, including patents, trade secrets,

© 2019, The Hartford
(May include copyrighted material of Insurance Services Office, Inc., with its permission)

processing methods, customer lists, financial information, credit card information, health information or any other type of nonpublic information; or

(2) Damages arising out of the loss of, loss of use of, damage to, corruption of, inability to access, or inability to manipulate “electronic data”.

This exclusion applies even if such damages are claimed for notification costs, credit monitoring expenses, forensic expenses, public relations expenses or any other loss, cost or expense incurred by you or others arising out of that which is described in Paragraph **(1)** or **(2)** above.

However, unless Paragraph **(1)** above applies, this exclusion does not apply to “damages” because of "bodily injury".

x. Limited Underlying Coverage

Any injury, damage, loss, costs or expense, including but not limited to "bodily injury", "property damage" or "personal and advertising injury" for which:

(1) "Underlying insurance" provides coverage; but that

(2) Because of a provision within the "underlying insurance", such coverage is provided at a limit or limits of insurance that are less than the limit(s) for the "underlying insurance" shown on the Extension Schedule Of Underlying Insurance.

y. Recording And Distribution Of Material Or Information In Violation Of Law

"Bodily injury", "property damage", or "personal and advertising injury" arising directly or indirectly out of any action or omission that violates or is alleged to violate:

(1) The Telephone Consumer Protection Act (TCPA), including any amendment of or addition to such law;

(2) The CAN-SPAM Act of 2003, including any amendment of or addition to such law;

(3) The Fair Credit Reporting Act (FCRA), and any amendment of or addition to such law, including the Fair and Accurate Credit Transaction Act (FACTA); or

(4) Any federal, state, or local statute, ordinance or regulation, other than the TCPA, CAN-SPAM Act of 2003 or FCRA and their amendments and additions, that addresses, prohibits or limits the printing, dissemination, disposal, collecting, recording, sending, transmitting, communicating or distribution of material or information.

z. Nuclear Energy Liability Exclusion (Broad Form)

(1) "Bodily injury" or "property damage":

(a) With respect to which an "insured" under this Supplemental Policy is also an "insured" under a Nuclear Energy Liability Policy issued by the Nuclear Energy Liability Insurance Association, Mutual Atomic Energy Liability Underwriters, Nuclear Insurance Association of Canada or any of their successors, or would be an "insured" under any such policy but for its termination upon exhaustion of its limit of liability; or

(b) Resulting from the "hazardous properties" of "nuclear material" and with respect to which:

(i) Any person or organization is required to maintain financial protection pursuant to the Atomic Energy Act of 1954, or any law amendatory thereof, or

(ii) The "insured" is, or had this policy not been issued would be, entitled to indemnity from the United States of America, or any agency thereof, under any agreement entered into by the United States of America, or any agency thereof, with any person or organization.

(2) "Bodily injury" or "property damage" resulting from the "hazardous properties" of "nuclear material" if:

(a) The "nuclear material":

(i) Is at any "nuclear facility" owned by, or operated by or on behalf of, an "insured"; or

(ii) Has been discharged or dispersed therefrom;

(b) The "nuclear material" is contained in "spent fuel" or "waste" at any time possessed, handled, used, processed, stored, transported or disposed of by or on behalf of an "insured"; or

© 2019, The Hartford
(May include copyrighted material of Insurance Services Office, Inc., with its permission)

(c) The "bodily injury" or "property damage" arises out of the furnishing by an "insured" of services, materials, parts or equipment in connection with the planning, construction, maintenance, operation or use of any "nuclear facility", but if such facility is located within the United States of America, its territories or possessions or Canada, this exclusion **(c)** applies only to "property damage" to such "nuclear facility" and any property thereat.

(3) As used in this exclusion:

"Property damage" includes all forms of radioactive contamination of property.

B. INVESTIGATION, DEFENSE, SETTLEMENT

1. With respect to "bodily injury", "property damage" or "personal and advertising injury" to which this insurance applies (whether or not the "self-insured retention" applies) and for which no coverage is provided under any "underlying insurance" or for which the underlying limits of any "underlying insurance" have been exhausted solely by payments of damages because of "occurrences" during the "policy period"; we:

a. Will have the right and the duty to defend any "suit" against the "insured" seeking "damages" on account thereof, even if such "suit" is groundless, false or fraudulent; but our right and duty to defend end when we have used up the applicable limit of insurance in the payment of judgments or settlements under coverages afforded by this Supplemental Policy;

b. May make such investigation and settlement of any claim or "suit" as we deem expedient;

c. Will pay:

(1) All expenses incurred by us;

(2) All court costs taxed against the "insured" in any "suit" defended by us. However, such costs do not include attorneys' fees, attorneys' expenses, witness or expert fees, or any other expenses of a party taxed against the "insured"; and

(3) All interest on the entire amount of any judgment therein which accrues after the entry of the judgment and before we have paid or tendered or deposited in court that part of the judgment which does not exceed the applicable limit of insurance;

(4) All premiums on appeal bonds required in any such "suit", premiums on bonds to release attachments in any such "suit" for an amount not in excess of the applicable limit of insurance, and the cost of bail bonds required of the "insured" because of an "accident" or traffic law violation arising out of the operation of any vehicle to which this Supplemental Policy applies, but we will have no obligation to apply for, furnish, finance, arrange for, guarantee, or collateralize, these bonds, whether the collateralization is characterized as premium or not;

(5) All reasonable expenses incurred by the "insured" at our request in assisting us in the investigation or defense of any claim or "suit", including actual loss of earnings not to exceed $500 per day per "insured";

and the amounts incurred in Paragraph c. above, are not subject to the "self-insured retention" and are payable in addition to any applicable limit of insurance.

We may pay any part or all of the "self insured retention" to pay a judgment or to effect settlement of a claim or "suit", and upon notification of the action taken, the "insured" shall promptly reimburse us for such amounts paid.

2. You agree to arrange for the investigation, defense or settlement of any claim or "suit" in any country where we may be prevented by law from carrying out this agreement. We will pay defense expenses incurred with our written consent in connection with any such claim or "suit" in addition to any applicable limit of insurance. We will also promptly reimburse you for our proper share, but subject to the applicable limit of insurance, of any settlement above the "self-insured retention" or "underlying insurance" made with our written consent.

3. We will have the right to associate at our expense with the "insured" or any underlying insurer in the investigation, defense or settlement of any claim or "suit" which in our opinion may require payment hereunder. In no event, however, will we contribute to the cost or expenses incurred by any underlying insurer.

C. WHO IS AN INSURED

1. If you are designated in the Supplemental Policy Declarations as:

© 2019, The Hartford
(May include copyrighted material of Insurance Services Office, Inc., with its permission)

a. An individual, you and your spouse are "insureds", but only with respect to the conduct of a business, other than that described in b. through e. below, of which you are the sole owner.

b. A partnership or joint venture, you are an "insured". Your members, your partners, and their spouses are also "insureds", but only with respect to the conduct of your business.

c. A limited liability company, you are an "insured". Your members are also "insureds", but only with respect to the conduct of your business. Your managers are "insureds", but only with respect to their duties as your managers.

d. An organization other than a partnership, joint venture or limited liability company, you are an "insured". Your "executive officers" and directors are "insureds", but only with respect to their duties as your officers or directors. Your stockholders are also "insureds", but only with respect to their liability as stockholders.

e. A trust, you are an "insured". Your trustees are also "insureds", but only with respect to their duties as trustees.

2. Each of the following is also an "insured":

a. Your "volunteer workers" only while performing duties related to the conduct of your business or your "employees" other than your "executive officers" (if you are an organization other than a partnership, joint venture or limited liability company) or your managers (if you are a limited liability company), but only for acts:

(1) Within the scope of their employment by you or while performing duties related to the conduct of your business; and

(2) Only if such "volunteer workers" or "employees" are "insureds" in the "underlying insurance" with limits of liability at least as high as set forth in the Extension Schedule Of Underlying Insurance, subject to all the limitations upon coverage and all other policy terms and conditions of such "underlying insurance" and this Supplemental Policy.

b. Any person or organization having proper temporary custody of your property if you die, but only:

(1) With respect to liability arising out of the maintenance or use of that property; and

(2) Until your legal representative has been appointed.

c. Your legal representative if you die, but only with respect to his or her duties as such. That representative will have all your rights and duties under this insurance.

3. With respect to any "auto", any person or entity that qualifies as an insured under the "underlying insurance" is an "insured" under this Supplemental Policy, subject to all the limitations of such "underlying insurance".

4. With respect to "mobile equipment", any person is an "insured" while driving such equipment along a public highway with your permission. Any other person or organization responsible for the conduct of such person is also an "insured", but only with respect to liability arising out of the operation of the equipment, and only if no other insurance of any kind is available to that person or organization for this liability. However, no person or organization is an "insured" with respect to:

a. "Bodily injury" to a co-"employee" of the person driving the equipment; or

b. "Property damage" to property owned by, rented to, in the charge of or occupied by you or the employer of any person who is an "insured" under this provision.

5. Any organization you newly acquire or form, other than a partnership, joint venture or limited liability company, and over which you maintain financial interest of more than 50% of the voting stock, will qualify as an "insured" if there is no other similar insurance available to that organization.

However:

a. Coverage under this provision is afforded only until the 180th day after you acquire or form the organization or the end of the "policy period", whichever is earlier;

b. This insurance does not apply to "bodily injury" or "property damage" that occurred before you acquired or formed the organization; and

c. This insurance does not apply to "personal and advertising injury" arising out of an offense committed before you acquired or formed the organization.

© 2019, The Hartford
(May include copyrighted material of Insurance Services Office, Inc., with its permission)

6. Each person or organization, not included as an "insured" in Paragraphs **1.**, **2.**, **3.**, **4.**, or **5.**, who is an insured in the "underlying insurance" is an "insured" under this Supplemental Policy subject to all the terms, conditions and limitations of such "underlying insurance".

With respect to any person or organization who is not an insured under "underlying insurance" but qualifies as an “insured” under this Supplemental Policy, coverage under this Supplemental Policy shall apply only to loss in excess of the amount of the "underlying insurance" or "self-insured retention" applicable to you.

However, coverage afforded by reason of the provisions set forth above applies only to the extent:

a. Of the scope of coverage provided by the applicable "underlying insurance" but in no event shall coverage be broader than the scope of coverage provided by this Supplemental Policy and any endorsements attached hereto; and

b. That such coverage provided by the applicable "underlying insurance" is maintained having limits as set forth in the Extension Schedule Of Underlying Insurance.

7. No person or organization is an "insured" with respect to the conduct of any current or past partnership, joint venture or limited liability company that is not shown as a Named Insured in the Supplemental Policy Declarations.

D. LIMITS OF INSURANCE

1. The Limits of Insurance shown in the Supplemental Policy Declarations and the rules below fix the most we will pay regardless of the number of:

a. "Insureds";

b. Claims made or "suits" brought;

c. Persons or organizations making claims or bringing "suits"; or

d. Coverages under which "damages" are covered under this Supplemental Policy.

2. The Limit of Insurance stated as the General Aggregate Limit is the most we will pay for the sum of "damages", other than "damages":

a. Because of injury or damage included within the "products-completed operations hazard";

b. Because of "bodily injury" by disease to your "employees" arising out of and in the course of their employment by you; and

c. Because of "bodily injury" or "property damage" arising out of the ownership, operation, maintenance, use, entrustment to others, or "loading or unloading" of any "auto".

3. The Limit of Insurance stated as the Products Completed Operations Aggregate Limit is the most we will pay for "damages" included within the "products-completed operations hazard".

4. The Limit of Insurance stated as the Bodily Injury By Disease Aggregate Limit is the most we will pay for "damages" because of "bodily injury" by disease to your "employees" arising out of and in the course of their employment by you.

5. Subject to Paragraphs **2.**, **3.**, or **4.** above, whichever applies, the Each Occurrence Limit is the most we will pay for "damages" because of all "bodily injury", "property damage", and "personal and advertising injury" arising out of any one "occurrence".

6. If coverage provided to an additional insured under this Supplemental Policy is required by a written contract, written agreement or permit, the most we will pay on behalf of the additional insured is the amount of insurance:

a. Required by the written contract, written agreement or permit, less any amounts payable by any "underlying insurance"; or

b. Available under the applicable Limits of Insurance shown in the Supplemental Policy Declarations, whichever is less.

Such additional insured coverage provided by this Supplemental Policy will not be broader than coverage provided by the "underlying insurance".

© 2019, The Hartford
(May include copyrighted material of Insurance Services Office, Inc., with its permission)

7. Our obligations under this insurance, except for our obligations under the Cancellation and Nonrenewal Conditions, end when the applicable Limit of Insurance available is used up. If we pay any amounts for "damages" in excess of that Limit of Insurance, you agree to reimburse us for such amounts.

8. The limits of this Supplemental Policy apply separately to each consecutive annual period and to any remaining period of less than 12 months, starting with the beginning of the "policy period" shown in the Supplemental Policy Declarations. However, if the "policy period" is extended after issuance for an additional period of less than 12 months, the additional period will be deemed part of the last preceding period for the purpose of determining the Limits of Insurance.

E. CONDITIONS

1. Premium

All premiums for this Supplemental Policy shall be computed in accordance with the Premium Section of the Supplemental Policy Declarations. The premium stated as such in the Supplemental Policy Declarations is a deposit premium only which shall be credited to the amount of any earned premium. At the end of the "policy period", the earned premium may be recomputed for such period, and upon notice thereof to the Named Insured first shown in the Supplemental Policy Declarations, shall become due and payable by such Named Insured. If the total earned premium for the "policy period" is less than the premium previously paid and more than the minimum premium, we shall return to such Named Insured the unearned portion paid by such Named Insured.

The Named Insured first shown in the Supplemental Policy Declarations shall maintain records of such information as is necessary for premium computation, and shall send copies of such records to us upon our request.

2. Inspection And Audit

We shall be permitted but not obligated to inspect your property and operations at any time. Neither our right to make inspections, nor the making thereof, nor any report thereon, shall constitute an undertaking on your behalf or for your benefit or that of others to determine or warrant that such property or operations are:

a. Safe;

b. Healthful; or

c. In compliance with any law, rule or regulation.

We may examine and audit your books and records at any time during the "policy period" and extensions thereof and within three years after the final termination of this Supplemental Policy, insofar as they relate to the subject matter of this Supplemental Policy.

3. Duties In The Event Of Occurrence, Claim Or Suit

a. You, or any other “insured” under this Supplemental Policy must see to it that we are notified as soon as practicable of an "occurrence" which may result in a claim under this Supplemental Policy.

(1) This requirement applies only when such "occurrence" is known to any of the following:

(a) You, or any other “insured” under this Supplemental Policy that is an individual;

(b) Any partner, if you or any other “insured” under this Supplemental Policy is a partnership;

(c) Any manager, if you or any other “insured” under this Supplemental Policy is a limited liability company;

(d) Any "executive officer" or insurance manager, if you or any other “insured” under this Supplemental Policy is a corporation.

(e) Any trustee, if you or any other “insured” under this Supplemental Policy is a trust; or

(f) Any elected or appointed official, if you or any other “insured” under this Supplemental Policy is a political subdivision or public entity.

This duty applies separately to you and any other “insured” under this Supplemental Policy.

(2) To the extent possible, notice should include:

(a) How, when and where the "occurrence" took place;

(b) The names and addresses of any injured persons and witnesses; and

© 2019, The Hartford
(May include copyrighted material of Insurance Services Office, Inc., with its permission)

(c) The nature and location of any injury or damage arising out of the "occurrence".

b. If a claim is made or "suit" is brought against any "insured", you or any other “insured” under this Supplemental Policy must:

(1) Immediately record the specifics of the claim or "suit" and the date received; and

(2) Notify us in writing as soon as practicable if the claim or “suit” is likely to exceed the amount of the "self-insured retention" or "underlying insurance", whichever applies.

c. You or any other "insured" under this Supplemental Policy must:

(1) Immediately send us copies of any demands, notices, summonses or legal papers received in connection with the claim or "suit" involving or likely to involve a sum in excess of any "self-insured retention" or "underlying insurance", whichever applies;

(2) Authorize us to obtain records and other information;

(3) Cooperate with us in the investigation or settlement of the claim or defense against the "suit"; and

(4) Assist us, upon our request in the enforcement of any right against any person or organization that may be liable to any "insured" because of injury or damage to which this Supplemental Policy or any "underlying insurance" or "self-insured retention" may also apply.

d. No "insured" will, except at that "insured's" own cost, make or agree to any settlement for a sum in excess of:

(1) The total limits of "underlying insurance"; or

(2) The "self-insured retention" if no "underlying insurance" applies,

without our consent.

e. No "insured" will, except at that "insured's" own cost, make a payment, assume any obligation, or incur any expenses, other than first aid, without our consent.

4. Assistance And Cooperation Of The Insured

The "insured" shall:

a. Cooperate with us and comply with all the terms and conditions of this Supplemental Policy; and

b. Cooperate with any of the underlying insurers as required by the terms and conditions of the "underlying insurance" and comply with all the terms and conditions thereof.

The "insured" shall enforce any right of contribution or indemnity against any person or organization who may be liable to the "insured" because of "bodily injury", "property damage" or "personal and advertising injury" with respect to this Supplemental Policy or any "underlying insurance".

5. Legal Action Against Us

No person or organization has a right under this Supplemental Policy:

a. To join us as a party or otherwise bring us into a "suit" asking for damages from an "insured"; or

b. To sue us on this Supplemental Policy unless all of its terms and those of the "underlying insurance" have been fully complied with.

A person or organization may sue us to recover on an agreed settlement or on a final judgment against an "insured"; but, we will not be liable for damages that are not payable under the terms of this Supplemental Policy or that are in excess of the applicable Limits of Insurance. An agreed settlement means a settlement and release of liability signed by us, the "insured" and the claimant or the claimant's legal representative.

6. Appeals

a. In the event the "insured", or any insurers providing coverage to which this Supplemental Policy is excess, elects to appeal a judgment in excess of such “underlying insurance”, any applicable self-insured retention, and any other valid and collectible insurance, we shall be liable, in addition to the applicable Limit of Insurance, to pay the premium on appeal bonds for that portion of the judgment in excess of the “underlying insurance”, self-insured retention, and any other valid and collectible insurance and within the applicable limit of insurance under this Supplemental Policy, but we will have no obligation to apply for, furnish, finance, arrange for, guarantee, or collateralize, those bonds, whether the collateralization is characterized as premium or not.

© 2019, The Hartford
(May include copyrighted material of Insurance Services Office, Inc., with its permission)

However, if we have paid, offered to pay, or deposited in court that part of the judgment that is within the applicable limit of this Supplemental Policy, then we will have no obligation to pay any premium on an appeal bond, and the “insured” or the “insured’s” underlying insurers or both will bear:

(1) The full cost and duty of obtaining any appeal bond; and

(2) The taxable costs, disbursements and additional interest incidental to such appeal.

If the claim is settled for less than the judgment amount, we shall only be liable for that portion of the settlement that is in excess of any applicable “underlying insurance”, self-insured retention, and any other valid and collectible insurance and within the applicable limit of this Supplemental Policy.

b. If the “insured”, or any insurers providing coverage to which this Supplemental Policy is excess, elect not to appeal a judgment in excess of such “underlying insurance”, applicable self-insured retention, and any other valid and collectible insurance, then we shall have the right to pursue such appeal. In that case, if the “insured” or the “insured’s” underlying insurers have paid, offered to pay, or deposited in court that part of the judgment that is within the applicable limit of such “underlying insurance”, self- insured retention, and any other valid and collectible insurance, then we shall be liable, in addition to the applicable limit of insurance, for:

(1) All expenses incurred by us;

(2) All court costs taxed against the "insured" in connection with such appeal. However, such costs do not include attorneys’ fees, attorneys’ expenses, witness or expert fees, or any other expenses of a party taxed against the “insured”;

(3) All interest on the entire amount of the judgment which accrues after the “insured” or the “insured’s” underlying insurers have paid, offered to pay, or deposited in court that part of the judgment which is within the limits of the “underlying insurance” self-insured retention, and any other valid and collectible insurance; and

(4) All premiums on appeal bonds for the amount of the judgment that is within the limits of any self-insured retention, “underlying insurance”, and this Supplemental Policy, but we will have no obligation to apply for, furnish, finance, arrange for, guarantee, or collateralize, those bonds, whether the collateralization is characterized as premium or not;

7. Other Insurance

This Supplemental Policy shall apply in excess of all "underlying insurance" whether or not valid and collectible. It shall also apply in excess of other valid and collectible insurance (except other insurance purchased specifically to apply in excess of this insurance) which also applies to any loss for which insurance is provided by this Supplemental Policy.

These excess provisions apply, whether such other insurance is stated to be:

a. Primary;

b. Contributing;

c. Excess; or

d. Contingent;

Provided that if such other insurance provides umbrella coverage in excess of "underlying insurance" or a self-insured retention, this Supplemental Policy shall contribute therewith with respect to "damages".

However, in the event that there is such other umbrella coverage available to cover such excess loss on an excess basis, we will pay only our share of the amount of such excess loss payable under this Supplemental Policy.

8. Transfer Of Rights Of Recovery Against Others To Us

a. If the "insured" has rights to recover all or a part of any payment we have made under this Supplemental Policy, those rights are transferred to us. The "insured" must do nothing after a loss to impair them. At our request, the "insured" will bring "suit" or transfer those rights to us and help us enforce them.

b. Recoveries shall be applied to reimburse:

(1) First, any interest (including the Named Insured) that paid any amount in excess of our limit of liability;

© 2019, The Hartford
(May include copyrighted material of Insurance Services Office, Inc., with its permission)

(2) Second, us, along with any other insurers with whom we participate in a loss on a quota share basis at the same layer;

(3) Third, such interests (including the Named Insured) of whom this insurance is excess.

However, a different apportionment may be made to effect settlement of a claim by agreement signed by all interests.

c. Reasonable expenses incurred in the exercise of rights of recovery shall be apportioned among all interests in the ratio of their respective losses for which recovery is sought.

9. Changes

This Supplemental Policy contains all the agreements between you and us concerning the insurance afforded. Notice to any agent, or knowledge possessed by any agent or any other person shall not effect a waiver or a change in any part of this Supplemental Policy, or stop us from asserting any rights under the terms of this Supplemental Policy.

The Named Insured first shown in the Supplemental Policy Declarations is authorized on behalf of all "insureds" to agree with us on changes in the terms of this Supplemental Policy.

If the terms are changed, the changes will be shown in an endorsement issued by us and made a part of this Supplemental Policy.

10. Separation Of Insureds

Except with respect to the Limits of Liability, and any rights or duties specifically assigned in this Supplemental Policy to the Named Insured first shown in the Supplemental Policy Declarations, this insurance applies:

a. As if each Named Insured were the only Named Insured; and

b. Separately to each "insured" against whom claim is made or "suit" is brought.

11. Maintenance Of Underlying Insurance

Policies, endorsements, and coverage parts affording in total the coverage and limits stated in the Extension Schedule Of Underlying Insurance shall be maintained in full effect during the currency of this Supplemental Policy. Your failure to comply with the foregoing shall not invalidate this Supplemental Policy, but in the event of such failure, we shall be liable only to the extent that we would have been liable had you complied with this Paragraph **11.**

The Named Insured first shown in the Supplemental Policy Declarations shall give us written notice as soon as practicable of any of the following:

a. Any change in the coverage or in the limits of any "underlying insurance", including but not limited to a change from occurrence coverage to claims made coverage;

b. Termination of part or all of one or more of the policies, endorsements, or coverage parts of "underlying insurance";

c. Reduction or exhaustion of an aggregate limit of liability of any "underlying insurance".

The "self-insured retention" shall not apply should the "underlying insurance" be exhausted by the payment of claims or "suits" which are also covered by this Supplemental Policy.

12. Cancellation

a. The Named Insured first shown in the Supplemental Policy Declarations may cancel this Supplemental Policy by mailing or delivering to us or to any of our authorized agents advance written notice of cancellation.

b. We may cancel this Supplemental Policy by mailing or delivering to the Named Insured first shown in the Supplemental Policy Declarations at the address shown in the Supplemental Policy Declarations, written notice of cancellation at least:

(1) 10 days before the effective date of cancellation if such Named Insured fails to pay the premium or any installment when due; or

(2) 30 days before the effective date of cancellation if we cancel for any other reason.

© 2019, The Hartford
(May include copyrighted material of Insurance Services Office, Inc., with its permission)

c. If notice is mailed, proof of mailing will be sufficient proof of notice. Notice will state the effective date of cancellation. The "policy period" will end on that date. Delivery of such notice by the Named Insured first shown in the Supplemental Policy Declarations or by us will be equivalent to mailing.

d. If the Named Insured first shown in the Supplemental Policy Declarations cancels, the refund may be less than pro rata, but we will retain any minimum premium stated as such in the Supplemental Policy Declarations. If we cancel, the refund will be pro rata. The cancellation will be effective even if we have not made or offered a refund.

13. Nonrenewal

a. If we decide not to renew, we will mail or deliver to the Named Insured first shown in the Supplemental Policy Declarations, at the address shown in the Supplemental Policy Declarations, written notice of nonrenewal at least 30 days before the end of the "policy period".

b. If notice is mailed, proof of mailing will be sufficient proof of notice.

c. If we offer to renew but such Named Insured does not accept, this Supplemental Policy will not be renewed at the end of the current "policy period".

14. Workers' Compensation Agreement

With respect to "bodily injury" to any officer or other "employee" arising out of and in the course of employment by you, you represent and agree that you have not abrogated and will not abrogate your defenses under any Workers' Compensation Law by rejection of such law or otherwise. If at any time during the "policy period" you abrogate such defenses, the insurance for "bodily injury" to such officer or other "employee" automatically terminates at the same time.

15. Bankruptcy Or Insolvency Of Insured

In the event of the bankruptcy or insolvency of the "insured" or any entity comprising the "insured", we shall not be relieved of any of our obligations under this Supplemental Policy.

16. Representations Or Fraud

By accepting this Supplemental Policy, you agree:

a. The statements in the Supplemental Policy Declarations are accurate and complete;

b. The statements in the Extension Schedule Of Underlying Insurance are accurate and complete;

c. The statements in **a.** and **b.** are based upon representations you made to us;

d. We have issued this Supplemental Policy in reliance upon your representations; and

e. This Supplemental Policy is void in any case of fraud by you as it relates to this Supplemental Policy or any claim under this Supplemental Policy.

F. DEFINITIONS

Except as otherwise provided in this Section or amended by endorsement, the words or phrases that appear in quotation marks within this Supplemental Policy shall follow the definitions of the applicable "underlying insurance".

1. "Accident" includes continuous or repeated exposure to the same conditions resulting in "bodily injury" or "property damage".

2. "Auto" means:

a. A land motor vehicle, trailer or semitrailer designed for travel on public roads, including any attached machinery or equipment; or

b. Any other land vehicle that is subject to a compulsory or financial responsibility law or other motor vehicle insurance or motor vehicle registration law where it is licensed or principally garaged.

However, "auto" does not include "mobile equipment".

3. "Covered pollution cost or expense":

a. Means any cost or expense arising out of:

(1) Any request, demand or order; or

© 2019, The Hartford
(May include copyrighted material of Insurance Services Office, Inc., with its permission)

(2) Any claim or "suit" by or on behalf of a governmental authority demanding

that the "insured" or others test for, monitor, clean up, remove, contain, treat, detoxify or neutralize, or in any way respond to, or assess the effects of "pollutants".

b. Does not include any cost or expense arising out of the actual, alleged or threatened discharge, dispersal, seepage, migration, release or escape of "pollutants":

(1) That are, or that are contained in any property that is:

(a) Being transported or towed by, handled, or handled for movement into, onto or from, any "auto";

(b) Otherwise in the course of transit by or on behalf of the "insured"; or

(c) Being stored, disposed of, treated or processed in or upon any "auto"; or

(2) Before the "pollutants" or any property in which the "pollutants" are contained are moved from the place where they are accepted by the "insured" for movement into or onto any "auto"; or

(3) After the "pollutants" or any property in which the "pollutants" are contained are moved from any "auto" to the place where they are finally delivered, disposed of or abandoned by the "insured".

c. Paragraph **(1)(a)** above does not apply to fuels, lubricants, fluids, exhaust gases or other similar "pollutants" that are needed for or result from the normal electrical, hydraulic or mechanical functioning of an "auto", covered by the "underlying insurance" or its parts, if:

(1) The "pollutants" escape, seep, migrate, or are discharged or released directly from an "auto" part designed by its manufacturer to hold, store, receive or dispose of such "pollutants"; and

(2) The "bodily injury", "property damage" or "covered pollution cost or expense" does not arise out of the operation of any equipment listed in Paragraphs **f.(2)** or **f.(3)** of the definition of "mobile equipment".

d. Paragraphs **b.(1)(b)** and **b.(1)(c)** above do not apply to "accidents" that occur away from premises owned by or rented to an "insured" with respect to "pollutants" not in or upon an "auto" covered by the "underlying insurance" if:

(1) The "pollutants" or any property in which the "pollutants" are contained are upset, overturned or damaged as a result of the maintenance or use of the "auto"; and

(2) The discharge, dispersal, seepage, migration, release or escape of the "pollutants" is caused directly by such upset, overturn or damage.

4. "Damages" means a monetary award, monetary settlement or monetary judgment. "Damages" include prejudgment interest awarded against the "insured" on that part of the judgment we pay.

a. The following are not considered "damages" and are not covered by this Supplemental Policy:

(1) Fines, penalties, sanctions or taxes;

(2) Attorney's fees and costs associated with any non-monetary relief awarded against the "insured"; or

(3) Any monetary award, monetary settlement or monetary judgment for which insurance is prohibited by the law(s) applicable to the construction of this Supplemental Policy.

5. "Hazardous properties" include radioactive, toxic or explosive properties.

6. "Insured" means any person or organization qualifying as an "insured" in the applicable Who Is An Insured provision of this Supplemental Policy, including any additional insured added by endorsement. The insurance afforded applies separately to each "insured" against whom claim is made or "suit" is brought, except with respect to the limit of our liability under Section **D. LIMITS OF INSURANCE**.

7. "Mobile equipment" means any of the following types of land vehicles, including any attached machinery or equipment:

a. Bulldozers, farm machinery, forklifts and other vehicles designed for use principally off public roads;

b. Vehicles maintained for use solely on or next to premises you own or rent;

c. Vehicles that travel on crawler treads;

d. Vehicles, whether self-propelled or not, on which are permanently mounted:

(1) Power cranes, shovels, loaders, diggers or drills; or

© 2019, The Hartford
(May include copyrighted material of Insurance Services Office, Inc., with its permission)

(2) Road construction or resurfacing equipment such as graders, scrapers or rollers;

e. Vehicles not described in **a.**, **b.**, **c.**, or **d.** above that are not self-propelled and are maintained primarily to provide mobility to permanently attached equipment of the following types:

(1) Air compressors, pumps and generators, including spraying, welding, building cleaning, geophysical exploration, lighting and well servicing equipment; or

(2) Cherry pickers and similar devices used to raise or lower workers;

f. Vehicles not described in **a., b., c.,** or **d.** above maintained primarily for purposes other than the transportation of persons or cargo.

However, self-propelled vehicles with the following types of permanently attached equipment are not "mobile equipment" but will be considered "autos":

(1) Equipment, of at least 1,000 pounds gross vehicle weight, designed primarily for:

(a) Snow removal;

(b) Road maintenance, but not construction or resurfacing; or

(c) Street cleaning;

(2) Cherry pickers and similar devices mounted on automobile or truck chassis and used to raise or lower workers; and

(3) Air compressors, pumps and generators, including spraying, welding, building cleaning, geophysical exploration, lighting and well servicing equipment.

However, “mobile equipment” does not include any land vehicle that is subject to a compulsory or financial responsibility law or other motor vehicle insurance or motor vehicle registration law where they are licensed or principally garaged. Land vehicles subject to a compulsory or financial responsibility law or other motor vehicle insurance law or motor vehicle registration law are considered “autos”.

8. "Nuclear facility" means:

a. Any "nuclear reactor";

b. Any equipment or device designed or used for:

(1) Separating the isotopes of uranium or plutonium;

(2) Processing or utilizing "spent fuel"; or

(3) Handling, processing or packaging "waste";

c. Any equipment or device used for the processing, fabricating or alloying of special nuclear material if at any time the total amount of such material in the custody of the "insured" at the premises where such equipment or device is located consists of or contains more than 25 grams of plutonium or uranium 233 or any combination thereof, or more than 250 grams of uranium 235; or

d. Any structure, basin, excavation, premises or place prepared or used for the storage or disposal of "waste"; and includes the site on which any of the foregoing is located, all operations conducted on such site and all premises used for such operations.

9. "Nuclear material" means source material, special nuclear material or by-product material.

Source material, special nuclear material and by-product material have the meanings given to them in the Atomic Energy Act of 1954 or in any law amendatory thereof.

10. "Nuclear reactor" means any apparatus designed or used to sustain nuclear fission in a self-supporting chain reaction or to contain a critical mass of fissionable material.

11. "Occurrence" means:

a. With respect to "bodily injury" or "property damage", an "accident", including continuous or repeated exposure to substantially the same general harmful conditions; and

b. With respect to "personal and advertising injury", an offense described in the definition of “personal and advertising injury” in the "underlying insurance".

© 2019, The Hartford
(May include copyrighted material of Insurance Services Office, Inc., with its permission)

12. "Policy period" as used in this Supplemental Policy means the period beginning with the effective date stated as such in the Supplemental Policy Declarations and ending with the earlier of:

a. The date of cancellation of this Supplemental Policy; or

b. The expiration date stated as such in the Supplemental Policy Declarations.

13. “Pollution hazard” means an actual exposure or threat of exposure to the corrosive, toxic or other harmful properties of any solid, liquid, gaseous or thermal:

a. Pollutants;

b. Contaminants;

c. Irritants; or

d. Toxic substances;

including smoke, vapors, soot, fumes, acids, alkalis, chemicals, or waste materials consisting of or containing any of the foregoing. Waste includes materials to be recycled, reconditioned, or reclaimed.

14. "Self-insured retention" means the amount stated as such in the Supplemental Policy Declarations which is retained and payable by the "insured" with respect to each "occurrence".

15. "Spent fuel" means any fuel element or fuel component, solid or liquid, which has been used or exposed to radiation in a "nuclear reactor".

16. "Underlying insurance" means the insurance policies, coverage parts, and endorsements listed in the Extension Schedule Of Underlying Insurance, including any renewals or replacements thereof, which provide the underlying coverages and limits stated in the Schedule Of Underlying Insurance.

The limits of "underlying insurance" include:

(1) Any applicable deductible amount;

(2) Any participation of any "insured"; and

(3) Any applicable self-insured retention;

Less the amount, if any, by which the aggregate limit of such insurance has been reduced by any payment relating to any act, error, omission, injury, damage or offense for which insurance is provided by this Supplemental Policy. The coverages and limits of such policies, coverage parts, and endorsements and any such deductible amount, participation or "self-insured retention" shall be deemed to be applicable regardless of:

(1) Any defense which any underlying insurer may assert because of the "insured's" failure to comply with any condition of its policy, coverage part, or endorsement; or

(2) The actual or alleged insolvency or financial impairment of any underlying insurer or any "insured".

The risk of insolvency or financial impairment of any underlying insurer or any "insured" is borne by you and not by us.

17. "Waste" means any waste material:

a. Containing by-product material other than the tailings or wastes produced by the extraction or concentration of uranium or thorium from any ore processed primarily for its source material content; and

b. Resulting from the operation by any person or organization of any "nuclear facility" included under the first two paragraphs of the definition of "nuclear facility".

© 2019, The Hartford
(May include copyrighted material of Insurance Services Office, Inc., with its permission)

THE HARTFORD

BUSINESS LIABILITY COVERAGE FORM

READ YOUR POLICY CAREFULLY

QUICK REFERENCE — **Beginning On Page**

A. COVERAGES 1
- Business Liability 1
- Medical Expenses 2
- Coverage Extension - Supplementary Payments 2

B. EXCLUSIONS 3

C. WHO IS AN INSURED 12

D. LIABILITY AND MEDICAL EXPENSES LIMITS OF INSURANCE 14

E. LIABILITY AND MEDICAL EXPENSES GENERAL CONDITIONS 15

1. Bankruptcy 15

2. Duties In The Event Of Occurrence, Offense, Claim Or Suit 15

3. Legal Action Against Us 16

4. Separation Of Insureds 16

5. Representations 16

6. Other Insurance 16

7. Transfer Of Rights Of Recovery Against Others To Us 18

F. LIABILITY AND MEDICAL EXPENSES DEFINITIONS 18

BUSINESS LIABILITY COVERAGE FORM

Various provisions in this Policy restrict coverage. Read the entire Policy carefully to determine rights, duties and what is and is not covered.

Throughout this Coverage Part the words "you" and "your" refer to the Named Insured shown in the Declarations. The words "we", "us" and "our" refer to the insurance company shown in the Declarations.

"Policy period", as used in this Coverage Part**,** means the period from the effective date of this Coverage Part to the expiration date of the Coverage Part as stated in the Declarations or the date of cancellation, whichever is earlier.

The word "insured" means any person or organization qualifying as such under Section **C**. Who Is An Insured.

Other words and phrases that appear in quotation marks have special meaning. Refer to Section **F**. Liability And Medical Expenses Definitions.

A. COVERAGES

1. Business Liability Coverage (Bodily Injury, Property Damage, Personal And Advertising Injury) Insuring Agreement

a. We will pay those sums that the insured becomes legally obligated to pay as damages because of "bodily injury", "property damage" or "personal and advertising injury" to which this insurance applies. We will have the right and duty to defend the insured against any "suit" seeking those damages. However, we will have no duty to defend the insured against any "suit" seeking damages for "bodily injury", "property damage" or "personal and advertising injury" to which this insurance does not apply.

We may, at our discretion, investigate any "occurrence" or offense and settle any claim or "suit" that may result. But:

(1) The amount we will pay for damages is limited as described in Section **D.** Liability And Medical Expenses Limits Of Insurance; and

(2) Our right and duty to defend ends when we have used up the applicable limit of insurance in the payment of judgments, settlements or medical expenses to which this insurance applies.

No other obligation or liability to pay sums or perform acts or services is covered unless explicitly provided for under Coverage Extension - Supplementary Payments.

b. This insurance applies:

(1) To "bodily injury" and "property damage" only if:

(a) The “bodily injury” or “property damage” is caused by an “occurrence” that takes place in the “coverage territory”;

(b) The "bodily injury" or "property damage" occurs during the policy period; and

(c) Prior to the policy period, no insured listed under Paragraph **1.** of Section **C.** Who Is An Insured and no "employee" authorized by you to give or receive notice of an "occurrence" or claim, knew that the "bodily injury" or "property damage" had occurred, in whole or in part. If such a listed insured or authorized "employee" knew, prior to the policy period, that the "bodily injury" or "property damage" occurred, then any continuation, change or resumption of such "bodily injury" or "property damage" during or after the policy period will be deemed to have been known prior to the policy period.

(2) To "personal and advertising injury" caused by an offense arising out of your business, but only if the offense was committed in the "coverage territory" during the policy period.

c. "Bodily injury" or "property damage" will be deemed to have been known to have occurred at the earliest time when any insured listed under Paragraph **1.** of Section **C.** Who Is An Insured or any "employee" authorized by you to give or receive notice of an "occurrence" or claim:

(1) Reports all, or any part, of the "bodily injury" or "property damage" to us or any other insurer;

(2) Receives a written or verbal demand or claim for damages because of the "bodily injury" or "property damage"; or

© 2018, The Hartford
(May include copyrighted material of Insurance Services Office, Inc., with its permission)

(3) Becomes aware by any other means that "bodily injury" or "property damage" has occurred or has begun to occur.

d. Damages because of "bodily injury" include damages claimed by any person or organization for care, loss of services or death resulting at any time from the "bodily injury".

e. Incidental Medical Malpractice

(1) "Bodily injury" arising out of the rendering of or failure to render professional health care services as a physician, dentist, nurse, emergency medical technician or paramedic shall be deemed to be caused by an "occurrence", but only if:

(a) The physician, dentist, nurse, emergency medical technician or paramedic is employed by you to provide such services; and

(b) You are not engaged in the business or occupation of providing such services.

(2) For the purpose of determining the limits of insurance for incidental medical malpractice, any act or omission together with all related acts or omissions in the furnishing of these services to any one person will be considered one "occurrence".

2. Medical Expenses

Insuring Agreement

a. We will pay medical expenses as described below for "bodily injury" caused by an accident:

(1) On premises you own or rent;

(2) On ways next to premises you own or rent; or

(3) Because of your operations;

provided that:

(1) The accident takes place in the "coverage territory" and during the policy period;

(2) The expenses are incurred and reported to us within three years of the date of the accident; and

(3) The injured person submits to examination, at our expense, by physicians of our choice as often as we reasonably require.

b. We will make these payments regardless of fault. These payments will not exceed the applicable limit of insurance. We will pay reasonable expenses for:

(1) First aid administered at the time of an accident;

(2) Necessary medical, surgical, x-ray and dental services, including prosthetic devices; and

(3) Necessary ambulance, hospital, professional nursing and funeral services.

3. Coverage Extension - Supplementary Payments

a. We will pay, with respect to any claim we investigate or settle, or any "suit" against an insured we defend:

(1) All expenses we incur.

(2) Up to $1,000 for the cost of bail bonds required because of accidents or traffic law violations arising out of the use of any vehicle to which Business Liability Coverage for "bodily injury" applies. We do not have to furnish these bonds.

(3) The cost of appeal bonds or bonds to release attachments, but only for bond amounts within the applicable limit of insurance. We do not have to furnish, finance, arrange for, guarantee, or collateralize these bonds, whether the collateralization is characterized as premium or not.

(4) All reasonable expenses incurred by the insured at our request to assist us in the investigation or defense of the claim or "suit", including actual loss of earnings up to $500 a day because of time off from work.

(5) All court costs taxed against the insured in the "suit". However, such costs do not include attorneys' fees, attorneys' expenses, witness or expert fees, or any other expenses of a party taxed against the insured.

(6) Prejudgment interest awarded against the insured on that part of the judgment we pay. If we make an offer to pay the applicable limit of insurance, we will not pay any prejudgment interest based on that period of time after the offer.

© 2018, The Hartford
(May include copyrighted material of Insurance Services Office, Inc., with its permission)

(7) All interest on the full amount of any judgment that accrues after entry of the judgment and before we have paid, offered to pay, or deposited in court the part of the judgment that is within the applicable limit of insurance.

Any amounts paid under **(1)** through **(7)** above will not reduce the Limits of Insurance.

b. If we defend an insured against a "suit" and an indemnitee of the insured is also named as a party to the "suit", we will defend that indemnitee if all of the following conditions are met:

(1) The "suit" against the indemnitee seeks damages for which the insured has assumed the liability of the indemnitee in a contract or agreement that is an "insured contract";

(2) This insurance applies to such liability assumed by the insured;

(3) The obligation to defend, or the cost of the defense of, that indemnitee, has also been assumed by the insured in the same "insured contract";

(4) The allegations in the "suit" and the information we know about the "occurrence" are such that no conflict appears to exist between the interests of the insured and the interest of the indemnitee;

(5) The indemnitee and the insured ask us to conduct and control the defense of that indemnitee against such "suit" and agree that we can assign the same counsel to defend the insured and the indemnitee; and

(6) The indemnitee:

(a) Agrees in writing to:

(i) Cooperate with us in the investigation, settlement or defense of the "suit";

(ii) Immediately send us copies of any demands, notices, summonses or legal papers received in connection with the "suit";

(iii) Notify any other insurer whose coverage is available to the indemnitee; and

(iv) Cooperate with us with respect to coordinating other applicable insurance available to the indemnitee; and

(b) Provides us with written authorization to:

(i) Obtain records and other information related to the "suit"; and

(ii) Conduct and control the defense of the indemnitee in such "suit".

So long as the above conditions are met, attorneys' fees incurred by us in the defense of that indemnitee, necessary litigation expenses incurred by us and necessary litigation expenses incurred by the indemnitee at our request will be paid as Supplementary Payments.

Notwithstanding the provisions of Paragraph **1.b.(b)** of Section **B.** Exclusions, such payments will not be deemed to be damages for "bodily injury" and "property damage" and will not reduce the Limits of Insurance.

Our obligation to defend an insured's indemnitee and to pay for attorneys' fees and necessary litigation expenses as Supplementary Payments ends when:

(1) We have used up the applicable limit of insurance in the payment of judgments or settlements; or

(2) The conditions set forth above, or the terms of the agreement described in Paragraph **(6)** above, are no longer met.

B. EXCLUSIONS

1. Applicable To Business Liability Coverage

This insurance does not apply to:

a. Expected Or Intended Injury

(1) "Bodily injury" or "property damage" expected or intended from the standpoint of the insured. This exclusion does not apply to "bodily injury" or "property damage" resulting from the use of reasonable force to protect persons or property; or

(2) "Personal and advertising injury" arising out of an offense committed by, at the direction of or with the consent or acquiescence of the insured with the expectation of inflicting "personal and advertising injury".

© 2018, The Hartford
(May include copyrighted material of Insurance Services Office, Inc., with its permission)

b. Contractual Liability

(1) "Bodily injury" or "property damage"; or

(2) "Personal and advertising injury"

for which the insured is obligated to pay damages by reason of the assumption of liability in a contract or agreement.

This exclusion does not apply to liability for damages because of:

(a) "Bodily injury", "property damage" or "personal and advertising injury" that the insured would have in the absence of the contract or agreement; or

(b) "Bodily injury" or "property damage" assumed in a contract or agreement that is an "insured contract", provided the "bodily injury" or "property damage" occurs subsequent to the execution of the contract or agreement. Solely for the purpose of liability assumed in an "insured contract", reasonable attorneys' fees and necessary litigation expenses incurred by or for a party other than an insured are deemed to be damages because of "bodily injury" or "property damage" provided:

(i) Liability to such party for, or for the cost of, that party's defense has also been assumed in the same "insured contract"; and

(ii) Such attorneys' fees and litigation expenses are for defense of that party against a civil or alternative dispute resolution proceeding in which damages to which this insurance applies are alleged.

c. Liquor Liability

"Bodily injury" or "property damage" for which any insured may be held liable by reason of:

(1) Causing or contributing to the intoxication of any person;

(2) The furnishing of alcoholic beverages to a person under the legal drinking age or under the influence of alcohol;

(3) Providing or failing to provide transportation with respect to any person that may be under the influence of alcohol; or

(4) Any statute, ordinance or regulation relating to the sale, gift, distribution or use of alcoholic beverages.

This exclusion applies even if the claims allege negligence or other wrongdoing in the supervision, hiring, employment, training or monitoring of others by an insured, if the "bodily injury" or "property damage" involved that which is described in Paragraph **(1), (2), (3)** or **(4)** above.

However, this exclusion applies only if you are in the business of manufacturing, distributing, selling, serving or furnishing alcoholic beverages. For the purposes of this exclusion, permitting a person to bring alcoholic beverages on your premises, for consumption on your premises, whether or not a fee is charged or a license is required for such activity, is not by itself considered the business of selling, serving, or furnishing alcoholic beverages.

d. Workers' Compensation And Similar Laws

Any obligation of the insured under a workers' compensation, disability benefits or unemployment compensation law or any similar law.

e. Employer's Liability

"Bodily injury" to:

(1) An "employee" of the insured arising out of and in the course of:

(a) Employment by the insured; or

(b) Performing duties related to the conduct of the insured's business; or

(2) The spouse, child, parent, brother or sister of that "employee" as a consequence of **(1)** above.

This exclusion applies:

(1) Whether the insured may be liable as an employer or in any other capacity; and

(2) To any obligation to share damages with or repay someone else who must pay damages because of the injury.

© 2018, The Hartford
(May include copyrighted material of Insurance Services Office, Inc., with its permission)

This exclusion does not apply to liability assumed by the insured under an "insured contract".

f. Pollution

(1) "Bodily injury", "property damage" or "personal and advertising injury" arising out of the actual, alleged or threatened discharge, dispersal, seepage, migration, release or escape of "pollutants":

(a) At or from any premises, site or location which is or was at any time owned or occupied by, or rented or loaned to any insured. However, this paragraph does not apply to:

(i) "Bodily injury" if sustained within a building and caused by smoke, fumes, vapor or soot produced by or originating from equipment that is used to heat, cool or dehumidify the building, or equipment that is used to heat water for personal use, by the building's occupants or their guests;

(ii) "Bodily injury" or "property damage" for which you may be held liable, if you are a contractor and the owner or lessee of such premises, site or location has been added to this Coverage Part as an additional insured with respect to your ongoing operations performed for that additional insured at that premises, site or location and such premises, site or location is not and never was owned or occupied by, or rented or loaned to, any insured, other than that additional insured; or

(iii) "Bodily injury" or "property damage" arising out of heat, smoke or fumes from a "hostile fire";

(b) At or from any premises, site or location which is or was at any time used by or for any insured or others for the handling, storage, disposal, processing or treatment of waste;

(c) Which are or were at any time transported, handled, stored, treated, disposed of, or processed as waste by or for:

(i) Any insured; or

(ii) Any person or organization for whom you may be legally responsible;

(d) At or from any premises, site or location on which any insured or any contractors or subcontractors working directly or indirectly on any insured's behalf are performing operations if the "pollutants" are brought on or to the premises, site or location in connection with such operations by such insured, contractor or subcontractor. However, this paragraph does not apply to:

(i) "Bodily injury" or "property damage" arising out of the escape of fuels, lubricants or other operating fluids which are needed to perform the normal electrical, hydraulic or mechanical functions necessary for the operation of "mobile equipment" or its parts, if such fuels, lubricants or other operating fluids escape from a vehicle part designed to hold, store or receive them. This exception does not apply if the "bodily injury" or "property damage" arises out of the intentional discharge, dispersal or release of the fuels, lubricants or other operating fluids, or if such fuels, lubricants or other operating fluids are brought on or to the premises, site or location with the intent that they be discharged, dispersed or released as part of the operations being performed by such insured, contractor or subcontractor;

(ii) "Bodily injury" or "property damage" sustained within a building and caused by the release of gases, fumes or vapors from materials brought into that building in connection with operations being performed by you or on your behalf by a contractor or subcontractor; or

(iii) "Bodily injury" or "property damage" arising out of heat, smoke or fumes from a "hostile fire"; or

(e) At or from any premises, site or location on which any insured or any contractors or subcontractors working directly or indirectly on any insured's behalf are performing operations if the operations are to test for, monitor, clean up, remove, contain, treat, detoxify or neutralize, or in any way respond to, or assess the effects of, "pollutants".

(2) Any loss, cost or expense arising out of any:

(a) Request, demand, order or statutory or regulatory requirement that any insured or others test for, monitor, clean up, remove, contain, treat, detoxify or neutralize, or in any way respond to, or assess the effects of, "pollutants"; or

(b) Claim or “suit” by or on behalf of a governmental authority for damages because of testing for, monitoring, cleaning up, removing, containing, treating, detoxifying or neutralizing, or in any way responding to, or assessing the effects of, "pollutants".

© 2018, The Hartford
(May include copyrighted material of Insurance Services Office, Inc., with its permission)

However, this paragraph does not apply to liability for damages because of "property damage" that the insured would have in the absence of such request, demand, order or statutory or regulatory requirement, or such claim or "suit" by or on behalf of a governmental authority.

g. Aircraft, Auto Or Watercraft

(1) Unmanned Aircraft

"Bodily injury" or "property damage" arising out of the ownership, maintenance, use or entrustment to others of any aircraft that is an "unmanned aircraft". Use includes operation and "loading or unloading".

This Exclusion **g.(1)** applies even if the claims against any insured allege negligence or other wrongdoing in the supervision, hiring, employment, training or monitoring of others by that insured, if the "bodily injury" or "property damage" arises out of the ownership, maintenance, use or entrustment to others of any aircraft that is an "unmanned aircraft".

(2) Aircraft (Other Than Unmanned Aircraft), Auto or Watercraft

"Bodily injury" or "property damage" arising out of the ownership, maintenance, use or entrustment to others of any aircraft (other than "unmanned aircraft"), "auto" or watercraft owned or operated by or rented or loaned to any insured. Use includes operation and "loading or unloading".

This Exclusion **g.(2)** applies even if the claims against any insured allege negligence or other wrongdoing in the supervision, hiring, employment, training or monitoring of others by that insured, if the "bodily injury" or "property damage" arises out of the ownership, maintenance, use or entrustment to others of any aircraft (other than "unmanned aircraft"), "auto" or watercraft that is owned or operated by or rented or loaned to any insured.

This Exclusion **g.(2)** does not apply to:

(a) A watercraft while ashore on premises you own or rent;

(b) A watercraft you do not own that is:

(i) Less than 51 feet long; and

(ii) Not being used to carry persons or property for a charge;

(c) Parking an "auto" on, or on the ways next to, premises you own or rent, provided the "auto" is not owned by or rented or loaned to you or the insured;

(d) Liability assumed under any "insured contract" for the ownership, maintenance or use of aircraft (other than "unmanned aircraft") or watercraft;

(e) "Bodily injury" or "property damage" arising out of:

(i) The operation of any of the machinery or equipment listed in Paragraph **f.(2)** or **f.(3)** of the definition of "mobile equipment"; or

(ii) The operation of machinery or equipment that is attached to, or part of, a land vehicle that would qualify under the definition of "mobile equipment" if it were not subject to a compulsory or financial responsibility law or other motor vehicle insurance or motor vehicle registration law where it is licensed or principally garaged; or

(f) An aircraft (other than "unmanned aircraft") that is not owned by any insured and is hired, chartered or loaned with a paid crew. However, this exception does not apply if the insured has any other insurance for such "bodily injury" or "property damage", whether the other insurance is primary, excess, contingent or on any other basis.

h. Mobile Equipment

"Bodily injury" or "property damage" arising out of:

(1) The transportation of "mobile equipment" by an "auto" owned or operated by or rented or loaned to any insured; or

(2) The use of "mobile equipment" in, or while in practice or preparation for, a prearranged racing, speed or demolition contest or in any stunting activity.

© 2018, The Hartford
(May include copyrighted material of Insurance Services Office, Inc., with its permission)

i. War

"Bodily injury", "property damage" or "personal and advertising injury", however caused, arising, directly or indirectly, out of:

(1) War, including undeclared or civil war;

(2) Warlike action by a military force, including action in hindering or defending against an actual or expected attack, by any government, sovereign or other authority using military personnel or other agents; or

(3) Insurrection, rebellion, revolution, usurped power, or action taken by governmental authority in hindering or defending against any of these.

j. Professional Services

"Bodily injury", "property damage" or "personal and advertising injury" arising out of the rendering of or failure to render any professional service. This includes but is not limited to:

(1) Legal, accounting or advertising services;

(2) Preparing, approving, or failing to prepare or approve maps, shop drawings, opinions, reports, surveys, field orders, change orders, designs or drawings and specifications;

(3) Supervisory, inspection, architectural or engineering activities;

(4) Medical, surgical, dental, x-ray or nursing services, treatment, advice or instruction;

(5) Any health or therapeutic service treatment, advice or instruction;

(6) Any service, treatment, advice or instruction for the purpose of appearance or skin enhancement, hair removal or replacement or personal grooming;

(7) Optical or hearing aid services including the prescribing, preparation, fitting, demonstration or distribution of ophthalmic lenses and similar products or hearing aid devices;

(8) Optometry or optometric services including but not limited to examination of the eyes and the prescribing, preparation, fitting, demonstration or distribution of ophthalmic lenses and similar products;

(9) Any:

(a) Body piercing (not including ear piercing);

(b) Tattooing, including but not limited to the insertion of pigments into or under the skin; and

(c) Similar services;

(10) Pharmaceutical services including but not limited to:

(a) The administering, prescribing, preparing, distributing or compounding of pharmaceutical drugs, vaccinations, immunizations or any of their component parts;

(b) The providing of or failure to provide home health care or home infusion products or services; and

(c) Advising and consulting customers;

(11) Computer consulting, design or programming services, including web site design.

This exclusion applies even if the claims allege negligence or other wrongdoing in the supervision, hiring, employment, training or monitoring of others by an insured, if the “bodily injury”, “property damage”, or “personal and advertising injury” arises out of the rendering of or the failure to render any professional service.

Paragraphs **(4)** and **(5)** of this exclusion do not apply to the Incidental Medical Malpractice coverage afforded under Paragraph **1.e.** in Section **A.** Coverages.

k. Damage To Property

"Property damage" to:

(1) Property you own, rent or occupy, including any costs or expenses incurred by you, or any other person, organization or entity, for repair, replacement, enhancement, restoration or maintenance of such property for any reason, including prevention of injury to a person or damage to another's property;

(2) Premises you sell, give away or abandon, if the "property damage" arises out of any part of those premises;

© 2018, The Hartford
(May include copyrighted material of Insurance Services Office, Inc., with its permission)

(3) Property loaned to you;

(4) Personal property in the care, custody or control of the insured;

(5) That particular part of real property on which you or any contractors or subcontractors working directly or indirectly on your behalf are performing operations, if the "property damage" arises out of those operations; or

(6) That particular part of any property that must be restored, repaired or replaced because "your work" was incorrectly performed on it.

Paragraphs **(1)**, **(3)** and **(4)** of this exclusion do not apply to "property damage" (other than damage by fire) to premises, including the contents of such premises, rented to you for a period of 7 or fewer consecutive days. A separate limit of insurance applies to Damage To Premises Rented To You as described in Section **D.** Limits Of Insurance.

Paragraph **(2)** of this exclusion does not apply if the premises are "your work" and were never occupied, rented or held for rental by you.

Paragraphs **(3)** and **(4)** of this exclusion do not apply to the use of elevators.

Paragraphs **(3)**, **(4)**, **(5)** and **(6)** of this exclusion do not apply to liability assumed under a sidetrack agreement.

Paragraphs **(3)** and **(4)** of this exclusion do not apply to "property damage" to borrowed equipment while not being used to perform operations at a job site.

Paragraph **(6)** of this exclusion does not apply to "property damage" included in the "products-completed operations hazard".

l. Damage To Your Product

"Property damage" to "your product" arising out of it or any part of it.

m. Damage To Your Work

"Property damage" to "your work" arising out of it or any part of it and included in the "products-completed operations hazard".

This exclusion does not apply if the damaged work or the work out of which the damage arises was performed on your behalf by a subcontractor.

n. Damage To Impaired Property Or Property Not Physically Injured

"Property damage" to "impaired property" or property that has not been physically injured, arising out of:

(1) A defect, deficiency, inadequacy or dangerous condition in "your product" or "your work"; or

(2) A delay or failure by you or anyone acting on your behalf to perform a contract or agreement in accordance with its terms.

This exclusion does not apply to the loss of use of other property arising out of sudden and accidental physical injury to "your product" or "your work" after it has been put to its intended use.

o. Recall Of Products, Work Or Impaired Property

Damages claimed for any loss, cost or expense incurred by you or others for the loss of use, withdrawal, recall, inspection, repair, replacement, adjustment, removal or disposal of:

(1) "Your product";

(2) "Your work"; or

(3) "Impaired property";

if such product, work or property is withdrawn or recalled from the market or from use by any person or organization because of a known or suspected defect, deficiency, inadequacy or dangerous condition in it.

p. Personal And Advertising Injury

"Personal and advertising injury":

(1) Arising out of oral, written, electronic, or any other manner of publication of material, if done by or at the direction of the insured with knowledge of its falsity;

© 2018, The Hartford
(May include copyrighted material of Insurance Services Office, Inc., with its permission)

(2) Arising out of oral, written, electronic, or any other manner of publication of material whose first publication took place before the beginning of the policy period;

(3) Arising out of a criminal act committed by or at the direction of the insured;

(4) Arising out of any breach of contract, except an implied contract to use another's "advertising idea" in your "advertisement";

(5) Arising out of the failure of goods, products or services to conform with any statement of quality or performance made in your "advertisement";

(6) Arising out of the wrong description of the price of goods, products or services;

(7) Arising out of:

(a) Any actual or alleged infringement or violation of any intellectual property rights, such as copyright, patent, right of publicity, trademark, trade dress, trade name, trade secret, service mark or other designation of origin or authenticity; or

(b) Any injury or damage alleged in any claim or "suit" that also alleges an infringement or violation of any intellectual property right, whether such allegation of infringement or violation is made against you, or by you or by any other party involved in the claim or "suit", regardless of whether this insurance would otherwise apply.

However, this exclusion does not apply if the only allegation in the claim or "suit" involving any intellectual property right is limited to:

(i) Infringement, in your "advertisement", of:

a. Copyright;

b. Slogan; unless the slogan is also a trademark, trade dress, trade name, service mark or other designation of origin or authenticity; or

c. Title of any literary or artistic work; or

(ii) Copying, in your "advertisement", a person's or organization's "advertising idea" or style of "advertisement".

Paragraph **(7)(b)ii** above shall not apply to claims or "suits" alleging infringement or violation of trademark, trade dress, trade name, service mark or other designation of origin or authenticity.

(8) Arising out of an offense committed by an insured whose business is:

(a) Advertising, broadcasting, publishing or telecasting;

(b) Designing or determining content of web sites for others; or

(c) An Internet search, access, content or service provider.

However, this exclusion does not apply to Paragraphs **a., b.** and **c.** under the definition of "personal and advertising injury" in Section **F.** Liability And Medical Expenses Definitions.

For the purposes of this exclusion, the placing of frames, borders, or links, or advertising, for you or others anywhere on the Internet, is not by itself, considered the business of advertising, broadcasting, publishing or telecasting;

(9) Arising out of an electronic chat room or bulletin board the insured hosts, owns, or over which the insured exercises control;

(10) Arising out of the unauthorized use of another's name or product in your e-mail address, domain name or metatags, or any other similar tactics to mislead another's potential customers;

(11) Arising out of the violation of a person's right of privacy created by any state or federal act.

However, this exclusion does not apply to liability for damages that the insured would have in the absence of such state or federal act;

(12) Arising out of:

(a) Advertising content for others on your web site;

(b) Placing a link to a web site of others on your web site;

© 2018, The Hartford
(May include copyrighted material of Insurance Services Office, Inc., with its permission)

(c) Content from a web site of others displayed within a frame or border on your web site. Content includes information, code, sounds, text, graphics or images; or

(d) Computer code, software or programming used to enable:

(i) Your web site; or

(ii) The presentation or functionality of an "advertisement" or other content on your web site;

(13) Arising out of a violation of any anti-trust law;

(14) Arising out of the fluctuation in price or value of any stocks, bonds or other securities;

(15) Arising out of any access to or disclosure of any person's or organization's confidential or personal information, including patents, trade secrets, processing methods, customer lists, financial information, credit card information, health information or any other type of nonpublic information.

This exclusion applies even if damages are claimed for notification costs, credit monitoring expenses, forensic expenses, public relations expenses or any other loss, cost or expense incurred by you or others arising out of any access to or disclosure of any person's or organization's confidential or personal information; or

(16) Arising out of the ownership, maintenance, use or entrustment to others of any aircraft that is an "unmanned aircraft". Use includes operation and "loading or unloading".

This exclusion applies even if the claims against any insured allege negligence or other wrongdoing in the supervision, hiring, employment, training or monitoring of others by that insured, if the "personal and advertising injury" arises out of the ownership, maintenance, use or entrustment to others of any aircraft that is an "unmanned aircraft".

However, this exclusion does not apply if the only allegation in the claim or "suit" involves an intellectual property right which is limited to:

(a) Infringement, in your "advertisement", of:

(i) Copyright;

(ii) Slogan; or

(iii) Title of any literary or artistic work; or

(b) Copying, in your "advertisement", a person's or organization's "advertising idea" or style of "advertisement".

q. Access Or Disclosure Of Confidential Or Personal Information And Data-Related Liability

(1) Damages because of “bodily injury” or “property damage” arising out of any access to or disclosure of any person’s or organization’s confidential or personal information, including patents, trade secrets, processing methods, customer lists, financial information, credit card information, health information or any other type of nonpublic information; or

(2) Damages arising out of the loss of, loss of use of, damage to, corruption of, inability to access, or inability to manipulate "electronic data".

This exclusion applies even if such damages are claimed for notification costs, credit monitoring expenses, forensic expenses, public relations expenses or any other loss, cost or expense incurred by you or others arising out of that which is described in Paragraphs **(1)** or **(2)** above.

However, unless Paragraph **(1)** above applies, this exclusion does not apply to damages because of “bodily injury”.

r. Employment-Related Practices

"Bodily injury" or "personal and advertising injury" to:

(1) A person arising out of any:

(a) Refusal to employ that person;

(b) Termination of that person's employment; or

© 2018, The Hartford
(May include copyrighted material of Insurance Services Office, Inc., with its permission)

(c) Employment-related practices, policies, acts or omissions, such as coercion, demotion, evaluation, reassignment, discipline, defamation, harassment, humiliation, discrimination, malicious prosecution or false arrest directed at that person; or

(2) The spouse, child, parent, brother or sister of that person as a consequence of "bodily injury" or "personal and advertising injury" to that person at whom any of the employment-related practices described in Paragraphs **(a)**, **(b)**, or **(c)** above is directed.

This exclusion applies:

(1) Whether the injury-causing event described in Paragraphs **(a)**, **(b)**, or **(c)** above occurs before employment, during employment or after employment of that person;

(2) Whether the insured may be liable as an employer or in any other capacity; and

(3) To any obligation to share damages with or repay someone else who must pay damages because of the injury.

s. Asbestos

(1) "Bodily injury", "property damage" or "personal and advertising injury" arising out of the "asbestos hazard".

(2) Any damages, judgments, settlements, loss, costs or expenses that:

(a) May be awarded or incurred by reason of any claim or “suit” alleging actual or threatened injury or damage of any nature or kind to persons or property which would not have occurred in whole or in part but for the "asbestos hazard";

(b) Arise out of any request, demand, order or statutory or regulatory requirement that any insured or others test for, monitor, clean up, remove, encapsulate, contain, treat, detoxify or neutralize or in any way respond to or assess the effects of an "asbestos hazard"; or

(c) Arise out of any claim or “suit” for damages because of testing for, monitoring, cleaning up, removing, encapsulating, containing, treating, detoxifying or neutralizing or in any way responding to or assessing the effects of an "asbestos hazard".

t. Recording And Distribution Of Material Or Information In Violation Of Law

"Bodily injury", "property damage", or "personal and advertising injury" arising directly or indirectly out of any action or omission that violates or is alleged to violate:

(1) The Telephone Consumer Protection Act (TCPA), including any amendment of or addition to such law;

(2) The CAN-SPAM Act of 2003, including any amendment of or addition to such law;

(3) The Fair Credit Reporting Act (FCRA), and any amendment of or addition to such law, including the Fair and Accurate Credit Transaction Act (FACTA); or

(4) Any federal, state or local statute, ordinance or regulation, other than the TCPA, CAN-SPAM Act of 2003 or FCRA and their amendments and additions, that addresses, prohibits or limits the printing, dissemination, disposal, collecting, recording, sending, transmitting, communicating or distribution of material or information.

Damage To Premises Rented To You – Exception For Damage By Fire, Lightning Or Explosion

Exclusions **c.** through **h.** and **k.** through **o.** do not apply to damage by fire, lightning or explosion to premises rented to you or temporarily occupied by you with permission of the owner. A separate limit of insurance applies to this coverage as described in Section **D.** Liability And Medical Expenses Limits Of Insurance.

2. Applicable To Medical Expenses Coverage

We will not pay expenses for "bodily injury":

a. Any Insured

To any insured, except "volunteer workers".

b. Hired Person

To a person hired to do work for or on behalf of any insured or a tenant of any insured.

© 2018, The Hartford
(May include copyrighted material of Insurance Services Office, Inc., with its permission)

c. Injury On Normally Occupied Premises

To a person injured on that part of premises you own or rent that the person normally occupies.

d. Workers' Compensation And Similar Laws

To a person, whether or not an "employee" of any insured, if benefits for the "bodily injury" are payable or must be provided under a workers' compensation or disability benefits law or a similar law.

e. Athletics Activities

To a person injured while practicing, instructing or participating in any physical exercises or games, sports or athletic contests.

f. Products-Completed Operations Hazard

Included with the "products-completed operations hazard".

g. Business Liability Exclusions

Excluded under Business Liability Coverage.

C. WHO IS AN INSURED

1. If you are designated in the Declarations as:

a. An individual, you and your spouse are insureds, but only with respect to the conduct of a business, other than that described in **b.** through **e.** below, of which you are the sole owner.

b. A partnership or joint venture, you are an insured. Your members, your partners, and their spouses are also insureds, but only with respect to the conduct of your business.

c. A limited liability company, you are an insured. Your members are also insureds, but only with respect to the conduct of your business. Your managers are insureds, but only with respect to their duties as your managers.

d. An organization other than a partnership, joint venture or limited liability company, you are an insured. Your "executive officers" and directors are insureds, but only with respect to their duties as your officers or directors. Your stockholders are also insureds, but only with respect to their liability as stockholders.

e. A trust, you are an insured. Your trustees are also insureds, but only with respect to their duties as trustees.

2. Each of the following is also an insured:

a. Employees And Volunteer Workers

Your "volunteer workers" only while performing duties related to the conduct of your business, or your "employees", other than either your "executive officers" (if you are an organization other than a partnership, joint venture or limited liability company) or your managers (if you are a limited liability company), but only for acts within the scope of their employment by you or while performing duties related to the conduct of your business.

However, none of these "employees" or "volunteer workers" are insureds for:

(1) "Bodily injury" or "personal and advertising injury":

(a) To you, to your partners or members (if you are a partnership or joint venture), to your members (if you are a limited liability company), or to a co-"employee" while in the course of his or her employment or performing duties related to the conduct of your business, or to your other "volunteer workers" while performing duties related to the conduct of your business;

(b) To the spouse, child, parent, brother or sister of that co-"employee" or that "volunteer worker" as a consequence of Paragraph **(1)(a)** above;

(c) For which there is any obligation to share damages with or repay someone else who must pay damages because of the injury described in Paragraphs **(1)(a)** or **(b)** above; or

(d) Arising out of his or her providing or failing to provide professional health care services.

If you are not in the business of providing professional health care services, Paragraph **(d)** does not apply to any nurse, emergency medical technician or paramedic employed by you to provide such services.

(2) "Property damage" to property:

© 2018, The Hartford
(May include copyrighted material of Insurance Services Office, Inc., with its permission)

(a) Owned, occupied or used by:

(b) Rented to, in the care, custody or control of, or over which physical control is being exercised for any purpose by you, any of your "employees", "volunteer workers", any partner or member (if you are a partnership or joint venture), or any member (if you are a limited liability company).

b. Real Estate Manager

Any person (other than your "employee" or "volunteer worker"), or any organization while acting as your real estate manager.

c. Temporary Custodians Of Your Property

Any person or organization having proper temporary custody of your property if you die, but only:

(1) With respect to liability arising out of the maintenance or use of that property; and

(2) Until your legal representative has been appointed.

d. Legal Representative If You Die

Your legal representative if you die, but only with respect to duties as such. That representative will have all your rights and duties under this insurance.

e. Unnamed Subsidiary

Any subsidiary and subsidiary thereof, of yours which is a legally incorporated entity of which you own a financial interest of more than 50% of the voting stock on the effective date of this Coverage Part.

The insurance afforded herein for any subsidiary not shown in the Declarations as a named insured does not apply to injury or damage with respect to which an insured under this insurance is also an insured under another policy or would be an insured under such policy but for its termination or upon the exhaustion of its limits of insurance.

3. Newly Acquired Or Formed Organization

Any organization you newly acquire or form, other than a partnership, joint venture or limited liability company, and over which you maintain financial interest of more than 50% of the voting stock, will qualify as a Named Insured if there is no other similar insurance available to that organization. However:

a. Coverage under this provision is afforded only until the 180th day after you acquire or form the organization or the end of the policy period, whichever is earlier; and

b. Coverage under this provision does not apply to:

(1) "Bodily injury" or "property damage" that occurred; or

(2) "Personal and advertising injury" arising out of an offense committed

before you acquired or formed the organization.

4. Operator Of Mobile Equipment

With respect to "mobile equipment" any person is an insured while driving such equipment along a public highway with your permission. Any other person or organization responsible for the conduct of such person is also an insured, but only with respect to liability arising out of the operation of the equipment, and only if no other insurance of any kind is available to that person or organization for this liability. However, no person or organization is an insured with respect to:

a. "Bodily injury" to a co-"employee" of the person driving the equipment; or

b. "Property damage" to property owned by, rented to, in the charge of or occupied by you or the employer of any person who is an insured under this provision.

5. Operator Of Nonowned Watercraft

With respect to watercraft you do not own that is less than 51 feet long and is not being used to carry persons or property for a charge, any person is an insured while operating such watercraft with your permission. Any other person or organization responsible for the conduct of such person is also an insured, but only with respect to liability arising out of the operation of the watercraft, and only if no other insurance of any kind is available to that person or organization for this liability.

However, no person or organization is an insured with respect to:

© 2018, The Hartford
(May include copyrighted material of Insurance Services Office, Inc., with its permission)

a. "Bodily injury" to a co-"employee" of the person operating the watercraft; or

b. "Property damage" to property owned by, rented to, in the charge of or occupied by you or the employer of any person who is an insured under this provision.

No person or organization is an insured with respect to the conduct of any current or past partnership, joint venture or limited liability company that is not shown as a Named Insured in the Declarations.

D. LIABILITY AND MEDICAL EXPENSES LIMITS OF INSURANCE

1. The Most We Will Pay

The Limits of Insurance shown in the Declarations and the rules below fix the most we will pay regardless of the number of:

a. Insureds;

b. Claims made or "suits" brought; or

c. Persons or organizations making claims or bringing "suits".

2. Aggregate Limits

The most we will pay for:

a. Damages because of "bodily injury" and "property damage" included in the "products-completed operations hazard" is the Products-Completed Operations Aggregate Limit shown in the Declarations.

b. Damages because of all other "bodily injury", "property damage" or "personal and advertising injury", including medical expenses, is the General Aggregate Limit shown in the Declarations.

This General Aggregate limit does not apply to "property damage" to premises while rented to you or temporarily occupied by you with permission of the owner, arising out of fire, lightning or explosion.

3. Each Occurrence Limit

Subject to **2.a.** or **2.b** above, whichever applies, the most we will pay for the sum of all damages because of all "bodily injury", "property damage" and medical expenses arising out of any one "occurrence" is the Liability and Medical Expenses Limit shown in the Declarations.

The most we will pay for all medical expenses because of "bodily injury" sustained by any one person is the Medical Expenses Limit shown in the Declarations.

4. Personal And Advertising Injury Limit

Subject to **2.b.** above, the most we will pay for the sum of all damages because of all "personal and advertising injury" sustained by any one person or organization is the Personal and Advertising Injury Limit shown in the Declarations.

5. Damage To Premises Rented To You Limit

The Damage To Premises Rented To You Limit is the most we will pay under Business Liability Coverage for damages because of "property damage" to any one premises, while rented to you, or in the case of damage by fire, lightning or explosion, while rented to you or temporarily occupied by you with permission of the owner.

In the case of damage by fire, lightning or explosion, the Damage to Premises Rented To You Limit applies to all damage proximately caused by the same event, whether such damage results from fire, lightning or explosion or any combination of these.

6. How Limits Apply To Additional Insureds

The most we will pay on behalf of a person or organization who is an additional insured under this Coverage Part is the lesser of:

a. The limits of insurance required in a written contract, written agreement or permit; or

b. The Limits of Insurance shown in the Declarations.

Such amount shall be a part of and not in addition to the Limits of Insurance shown in the Declarations and described in this Section.

If more than one limit of insurance under this Policy and any endorsements attached thereto applies to any claim or "suit", the most we will pay under this Policy and the endorsements is the single highest limit of liability of all

© 2018, The Hartford
(May include copyrighted material of Insurance Services Office, Inc., with its permission)

coverages applicable to such claim or "suit". However, this paragraph does not apply to the Medical Expenses limit set forth in Paragraph **3.** above.

The Limits of Insurance of this Coverage Part apply separately to each consecutive annual period and to any remaining period of less than 12 months, starting with the beginning of the policy period shown in the Declarations, unless the policy period is extended after issuance for an additional period of less than 12 months. In that case, the additional period will be deemed part of the last preceding period for purposes of determining the Limits of Insurance.

E. LIABILITY AND MEDICAL EXPENSES GENERAL CONDITIONS

1. Bankruptcy

Bankruptcy or insolvency of the insured or of the insured's estate will not relieve us of our obligations under this Coverage Part.

2. Duties In The Event Of Occurrence, Offense, Claim Or Suit

a. Notice Of Occurrence Or Offense

You or any additional insured under this Coverage Part must see to it that we are notified as soon as practicable of an "occurrence" or an offense which may result in a claim. To the extent possible, notice should include:

(1) How, when and where the "occurrence" or offense took place;

(2) The names and addresses of any injured persons and witnesses; and

(3) The nature and location of any injury or damage arising out of the "occurrence" or offense.

b. Notice Of Claim

If a claim is made or "suit" is brought against any insured, you or any additional insured under this Coverage Part must:

(1) Immediately record the specifics of the claim or "suit" and the date received; and

(2) Notify us as soon as practicable.

You or any additional insured under this Coverage Part must see to it that we receive a written notice of the claim or "suit" as soon as practicable.

c. Assistance And Cooperation Of The Insured

You and any other involved insured must:

(1) Immediately send us copies of any demands, notices, summonses or legal papers received in connection with the claim or “suit”;

(2) Authorize us to obtain records and other information;

(3) Cooperate with us in the investigation, settlement of the claim or defense against the "suit"; and

(4) Assist us, upon our request, in the enforcement of any right against any person or organization that may be liable to the insured because of injury or damage to which this insurance may also apply.

d. Obligations At The Insured's Own Cost

No insured will, except at that insured's own cost, voluntarily make a payment, assume any obligation, or incur any expense, other than for first aid, without our consent.

e. Additional Insured's Other Insurance

If we cover a claim or "suit" under this Coverage Part that may also be covered by other insurance available to an additional insured under this Coverage Part, such additional insured must submit such claim or "suit" to the other insurer for defense and indemnity.

However, this provision does not apply to the extent that you have agreed in a written contract, written agreement or permit that this insurance is primary and non-contributory with such additional insured's own insurance.

f. Knowledge Of An Occurrence, Offense, Claim Or Suit

Paragraphs **a.** and **b.** apply to you or to any additional insured under this Coverage Part only when such "occurrence", offense, claim or "suit" is known to:

© 2018, The Hartford
(May include copyrighted material of Insurance Services Office, Inc., with its permission)

(1) You or any additional insured under this Coverage Part that is an individual;

(2) Any partner, if you or an additional insured under this Coverage Part is a partnership;

(3) Any manager, if you or an additional insured under this Coverage Part is a limited liability company;

(4) Any "executive officer" or insurance manager, if you or an additional insured under this Coverage Part is a corporation;

(5) Any trustee, if you or an additional insured under this Coverage Part is a trust; or

(6) Any elected or appointed official, if you or an additional insured under this Coverage Part is a political subdivision or public entity.

This Paragraph **f.** applies separately to you and any additional insured under this Coverage Part.

3. Legal action Against Us

No person or organization has a right under this Coverage Part:

a. To join us as a party or otherwise bring us into a "suit" asking for damages from an insured; or

b. To sue us on this Coverage Part unless all of its terms have been fully complied with.

A person or organization may sue us to recover on an agreed settlement or on a final judgment against an insured; but we will not be liable for damages that are not payable under the terms of this insurance or that are in excess of the applicable limit of insurance. An agreed settlement means a settlement and release of liability signed by us, the insured and the claimant or the claimant's legal representative.

4. Separation Of Insureds

Except with respect to the Limits of Insurance, and any rights or duties specifically assigned in this Policy to the first Named Insured, this insurance applies:

a. As if each Named Insured were the only Named Insured; and

b. Separately to each insured against whom a claim is made or "suit" is brought.

5. Representations

a. When You Accept This Policy

By accepting this Policy, you agree:

(1) The statements in the Declarations are accurate and complete;

(2) Those statements are based upon representations you made to us; and

(3) We have issued this Policy in reliance upon your representations.

b. Unintentional Failure To Disclose Hazards

If unintentionally you should fail to disclose all hazards relating to the conduct of your business at the inception date of this Coverage Part, we shall not deny any coverage under this Coverage Part because of such failure.

6. Other Insurance

If other valid and collectible insurance is available for a loss we cover under this Coverage Part, our obligations are limited as follows:

a. Primary Insurance

This insurance is primary except when **b.** below applies. If other insurance is also primary, we will share with all that other insurance by the method described in **c.** below.

b. Excess Insurance

This insurance is excess over any of the other insurance, whether primary, excess, contingent or on any other basis:

(1) Your Work

That is Fire, Extended Coverage, Builder's Risk, Installation Risk, Owner Controlled Insurance Program or OCIP, Contractor Controlled Insurance Program or CCIP, Wrap Up Insurance or similar coverage for "your work";

© 2018, The Hartford
(May include copyrighted material of Insurance Services Office, Inc., with its permission)

(2) Premises Rented To You

That is fire, lightning or explosion insurance for premises rented to you or temporarily occupied by you with permission of the owner;

(3) Tenant Liability

That is insurance purchased by you to cover your liability as a tenant for "property damage" to premises rented to you or temporarily occupied by you with permission of the owner;

(4) Aircraft, Auto Or Watercraft

If the loss arises out of the maintenance or use of aircraft, "autos" or watercraft to the extent not subject to Exclusion **g.** of Section **B.** Exclusions.

(5) Property Damage To Borrowed Equipment Or Use Of Elevators

If the loss arises out of "property damage" to borrowed equipment or the use of elevators to the extent not subject to Exclusion **k.** of Section **B.** Exclusions.

(6) When You Are Added As An Additional Insured To Other Insurance

That is other insurance available to you covering liability for damages arising out of the premises or operations, or products and completed operations, for which you have been added as an additional insured by that insurance; or

(7) When You Add Others As An Additional Insured To This Insurance

That is other insurance available to an additional insured.

However, the following provisions apply to other insurance available to any person or organization who is an additional insured under this Coverage Part:

(a) Primary Insurance When Required By Contract

This insurance is primary if you have agreed in a written contract, written agreement or permit that this insurance be primary. If other insurance is also primary, we will share with all that other insurance by the method described in **c.** below.

(b) Primary And Non-Contributory To Other Insurance When Required By Contract

If you have agreed in a written contract, written agreement or permit that this insurance is primary and non-contributory with the additional insured's own insurance, this insurance is primary and we will not seek contribution from that other insurance.

Paragraphs **(a)** and **(b)** do not apply to other insurance to which the additional insured has been added as an additional insured.

When this insurance is excess, we will have no duty under this Coverage Part to defend the insured against any "suit" if any other insurer has a duty to defend the insured against that "suit". If no other insurer defends, we will undertake to do so, but we will be entitled to the insured's rights against all those other insurers.

When this insurance is excess over other insurance, we will pay only our share of the amount of the loss, if any, that exceeds the sum of:

(1) The total amount that all such other insurance would pay for the loss in the absence of this insurance; and

(2) The total of all deductible and self-insured amounts under all that other insurance.

We will share the remaining loss, if any, with any other insurance that is not described in this Excess Insurance provision and was not bought specifically to apply in excess of the Limits of Insurance shown in the Declarations of this Coverage Part.

c. Method Of Sharing

If all the other insurance permits contribution by equal shares, we will follow this method also. Under this approach, each insurer contributes equal amounts until it has paid its applicable limit of insurance or none of the loss remains, whichever comes first.

© 2018, The Hartford
(May include copyrighted material of Insurance Services Office, Inc., with its permission)

If any of the other insurance does not permit contribution by equal shares, we will contribute by limits. Under this method, each insurer's share is based on the ratio of its applicable limit of insurance to the total applicable limits of insurance of all insurers.

7. Transfer Of Rights Of Recovery Against Others To Us

a. Transfer Of Rights Of Recovery

If the insured has rights to recover all or part of any payment, including Supplementary Payments, we have made under this Coverage Part, those rights are transferred to us. The insured must do nothing after loss to impair them. At our request, the insured will bring "suit" or transfer those rights to us and help us enforce them. This condition does not apply to Medical Expenses Coverage.

b. Waiver Of Rights Of Recovery (Waiver Of Subrogation)

If the insured has waived any rights of recovery against any person or organization for all or part of any payment, including Supplementary Payments, we have made under this Coverage Part, we also waive that right, provided the insured waived their rights of recovery against such person or organization in a contract, agreement or permit that was executed prior to the injury or damage.

F. LIABILITY AND MEDICAL EXPENSES DEFINITIONS

1. "Advertisement" means a notice that is broadcast or published to the general public or specific market segments about your goods, products or services for the purpose of attracting customers or supporters. For the purpose of this definition:

a. Notices that are published include material placed on the Internet or on similar electronic means of communication; and

b. Regarding web sites, only that part of a web site that is about your goods, products or services for the purpose of attracting customers or supporters is considered an advertisement.

2. "Advertising idea" means any idea for an "advertisement".

3. "Asbestos hazard" means an exposure or threat of exposure to the actual or alleged properties of asbestos and includes the mere presence of asbestos in any form.

4. "Auto" means:

a. A land motor vehicle, trailer or semi-trailer designed for travel on public roads, including any attached machinery or equipment; or

b. Any other land vehicle that is subject to a compulsory or financial responsibility law or other motor vehicle insurance or motor vehicle registration law where it is licensed or principally garaged.

However, "auto" does not include "mobile equipment".

5. "Bodily injury" means physical:

a. Injury;

b. Sickness; or

c. Disease

sustained by a person and, if arising out of the above, mental anguish or death at any time.

6. "Coverage territory" means:

a. The United States of America (including its territories and possessions), Puerto Rico and Canada;

b. International waters or airspace, but only if the injury or damage occurs in the course of travel or transportation between any places included in **a.** above;

c. All other parts of the world if the injury or damage arises out of:

(1) Goods or products made or sold by you in the territory described in **a.** above;

(2) The activities of a person whose home is in the territory described in **a.** above, but is away for a short time on your business; or

© 2018, The Hartford
(May include copyrighted material of Insurance Services Office, Inc., with its permission)

(3) "Personal and advertising injury" offenses that take place through the Internet or similar electronic means of communication.

provided the insured's responsibility to pay damages is determined in the United States of America (including its territories and possessions), Puerto Rico or Canada, in a "suit" on the merits according to the substantive law in such territory, or in a settlement we agree to.

7. "Electronic data" means information, facts or computer programs stored as or on, created or used on, or transmitted to or from computer software (including systems and applications software), on hard or floppy disks, CD-ROMs, tapes, drives, cells, data processing devices or any other repositories of computer software which are used with electronically controlled equipment. The term computer programs, referred to in the foregoing description of “electronic data”, means a set of related electronic instructions which direct the operations and functions of a computer or device connected to it, which enable the computer or device to receive, process, store, retrieve or send data.

8. "Employee" includes a "leased worker". "Employee" does not include a "temporary worker".

9. "Executive officer" means a person holding any of the officer positions created by your charter, constitution, by-laws or any other similar governing document.

10. "Hostile fire" means one which becomes uncontrollable or breaks out from where it was intended to be.

11. "Impaired property" means tangible property, other than "your product" or "your work", that cannot be used or is less useful because:

a. It incorporates "your product" or "your work" that is known or thought to be defective, deficient, inadequate or dangerous; or

b. You have failed to fulfill the terms of a contract or agreement;

if such property can be restored to use by:

a. The repair, replacement, adjustment or removal of "your product" or "your work"; or

b. Your fulfilling the terms of the contract or agreement.

12. "Insured contract" means:

a. A contract for a lease of premises. However, that portion of the contract for a lease of premises that indemnifies any person or organization for damage by fire, lightning or explosion to premises while rented to you or temporarily occupied by you with permission of the owner is subject to the Damage To Premises Rented To You limit described in Section **D.** Liability And Medical Expenses Limits Of Insurance.

b. A sidetrack agreement;

c. Any easement or license agreement, including an easement or license agreement in connection with construction or demolition operations on or within 50 feet of a railroad;

d. Any obligation, as required by ordinance, to indemnify a municipality, except in connection with work for a municipality;

e. An elevator maintenance agreement; or

f. That part of any other contract or agreement pertaining to your business (including an indemnification of a municipality in connection with work performed for a municipality) under which you assume the tort liability of another party to pay for "bodily injury" or "property damage" to a third person or organization. Tort liability means a liability that would be imposed by law in the absence of any contract or agreement.

Paragraph **f.** includes that part of any contract or agreement that indemnifies a railroad for "bodily injury" or "property damage" arising out of construction or demolition operations within 50 feet of any railroad property and affecting any railroad bridge or trestle, tracks, road-beds, tunnel, underpass or crossing.

However, Paragraph **f.** does not include that part of any contract or agreement:

(1) That indemnifies an architect, engineer or surveyor for injury or damage arising out of:

(a) Preparing, approving or failing to prepare or approve maps, shop drawings, opinions, reports, surveys, field orders, change orders, designs or drawings and specifications; or

(b) Giving directions or instructions, or failing to give them, if that is the primary cause of the injury or damage; or

© 2018, The Hartford
(May include copyrighted material of Insurance Services Office, Inc., with its permission)

(2) Under which the insured, if an architect, engineer or surveyor, assumes liability for an injury or damage arising out of the insured's rendering or failure to render professional services, including those listed in **(1)** above and supervisory, inspection, architectural or engineering activities.

13. "Leased worker" means a person leased to you by a labor leasing firm under an agreement between you and the labor leasing firm, to perform duties related to the conduct of your business. "Leased worker" does not include a "temporary worker".

14. "Loading or unloading" means the handling of property:

a. After it is moved from the place where it is accepted for movement into or onto an aircraft, watercraft or "auto";

b. While it is in or on an aircraft, watercraft or "auto"; or

c. While it is being moved from an aircraft, watercraft or "auto" to the place where it is finally delivered;

but "loading or unloading" does not include the movement of property by means of a mechanical device, other than a hand truck, that is not attached to the aircraft, watercraft or "auto".

15. "Mobile equipment" means any of the following types of land vehicles, including any attached machinery or equipment:

a. Bulldozers, farm machinery, forklifts and other vehicles designed for use principally off public roads;

b. Vehicles maintained for use solely on or next to premises you own or rent;

c. Vehicles that travel on crawler treads;

d. Vehicles, whether self-propelled or not, on which are permanently mounted:

(1) Power cranes, shovels, loaders, diggers or drills; or

(2) Road construction or resurfacing equipment such as graders, scrapers or rollers;

e. Vehicles not described in **a., b., c.,** or **d.** above that are not self-propelled and are maintained primarily to provide mobility to permanently attached equipment of the following types:

(1) Air compressors, pumps and generators, including spraying, welding, building cleaning, geophysical exploration, lighting and well servicing equipment; or

(2) Cherry pickers and similar devices used to raise or lower workers;

f. Vehicles not described in **a., b., c.,** or **d.** above maintained primarily for purposes other than the transportation of persons or cargo.

However, self-propelled vehicles with the following types of permanently attached equipment are not "mobile equipment" but will be considered "autos":

(1) Equipment, of at least 1,000 pounds gross vehicle weight, designed primarily for:

(a) Snow removal;

(b) Road maintenance, but not construction or resurfacing; or

(c) Street cleaning;

(2) Cherry pickers and similar devices mounted on automobile or truck chassis and used to raise or lower workers; and

(3) Air compressors, pumps and generators, including spraying, welding, building cleaning, geophysical exploration, lighting and well servicing equipment.

However, “mobile equipment” does not include any land vehicle that is subject to a compulsory or financial responsibility law or other motor vehicle insurance or motor vehicle registration law where they are licensed or principally garaged. Land vehicles subject to a compulsory or financial responsibility law or other motor vehicle insurance law or motor vehicle registration law are considered “autos”.

16. "Occurrence" means an accident, including continuous or repeated exposure to substantially the same general harmful conditions.

17. "Personal and advertising injury" means injury, including consequential "bodily injury", arising out of one or more of the following offenses:

© 2018, The Hartford
(May include copyrighted material of Insurance Services Office, Inc., with its permission)

a. False arrest, detention or imprisonment;

b. Malicious prosecution;

c. The wrongful eviction from, wrongful entry into, or invasion of the right of private occupancy of a room, dwelling or premises that a person or organization occupies, committed by or on behalf of its owner, landlord or lessor;

d. Oral, written, electronic, or any other manner of publication of material that slanders or libels a person or organization or disparages a person's or organization's goods, products or services;

e. Oral, written, electronic, or any other manner of publication of material that violates a person's right of privacy;

f. Copying, in your "advertisement", a person's or organization's "advertising idea" or style of "advertisement"; or

g. Infringement of copyright, slogan, or title of any literary or artistic work, in your "advertisement".

18. "Pollutants" means any solid, liquid, gaseous or thermal irritant or contaminant, including smoke, vapor, soot, fumes, acids, alkalis, chemicals and waste. Waste includes materials to be recycled, reconditioned or reclaimed.

19. "Products-completed operations hazard";

a. Includes all "bodily injury" and "property damage" occurring away from premises you own or rent and arising out of "your product" or "your work" except:

(1) Products that are still in your physical possession; or

(2) Work that has not yet been completed or abandoned. However, "your work" will be deemed to be completed at the earliest of the following times:

(a) When all of the work called for in your contract has been completed.

(b) When all of the work to be done at the job site has been completed if your contract calls for work at more than one job site.

(c) When that part of the work done at a job site has been put to its intended use by any person or organization other than another contractor or subcontractor working on the same project.

Work that may need service, maintenance, correction, repair or replacement, but which is otherwise complete, will be treated as completed.

The "bodily injury" or "property damage" must occur away from premises you own or rent, unless your business includes the selling, handling or distribution of "your product" for consumption on premises you own or rent.

b. Does not include "bodily injury" or "property damage" arising out of:

(1) The transportation of property, unless the injury or damage arises out of a condition in or on a vehicle not owned or operated by you, and that condition was created by the "loading or unloading" of that vehicle by any insured; or

(2) The existence of tools, uninstalled equipment or abandoned or unused materials.

20. "Property damage" means:

a. Physical injury to tangible property, including all resulting loss of use of that property. All such loss of use shall be deemed to occur at the time of the physical injury that caused it; or

b. Loss of use of tangible property that is not physically injured. All such loss of use shall be deemed to occur at the time of "occurrence" that caused it.

As used in this definition, "electronic data" is not tangible property.

21. "Suit" means a civil proceeding in which damages because of "bodily injury", "property damage" or "personal and advertising injury" to which this insurance applies are alleged. "Suit" includes:

a. An arbitration proceeding in which such damages are claimed and to which the insured must submit or does submit with our consent; or

b. Any other alternative dispute resolution proceeding in which such damages are claimed and to which the insured submits with our consent.

© 2018, The Hartford
(May include copyrighted material of Insurance Services Office, Inc., with its permission)

22. "Temporary worker" means a person who is furnished to you to substitute for a permanent "employee" on leave or to meet seasonal or short-term workload conditions.

23. "Unmanned aircraft" means an aircraft that is not:

a. Designed;

b. Manufactured; or

c. Modified after manufacture;

to be controlled directly by a person from within or on the aircraft.

24. "Volunteer worker" means a person who:

a. Is not your "employee";

b. Donates his or her work;

c. Acts at the direction of and within the scope of duties determined by you; and

d. Is not paid a fee, salary or other compensation by you or anyone else for their work performed for you.

25. "Your product":

a. Means:

(1) Any goods or products, other than real property, manufactured, sold, handled, distributed or disposed of by:

(a) You;

(b) Others trading under your name; or

(c) A person or organization whose business or assets you have acquired; and

(2) Containers (other than vehicles), materials, parts or equipment furnished in connection with such goods or products.

b. Includes:

(1) Warranties or representations made at any time with respect to the fitness, quality, durability, performance or use of "your product"; and

(2) The providing of or failure to provide warnings or instructions.

c. Does not include vending machines or other property rented to or located for the use of others but not sold.

26. "Your work":

a. Means:

(1) Work or operations performed by you or on your behalf; and

(2) Materials, parts or equipment furnished in connection with such work or operations.

b. Includes:

(1) Warranties or representations made at any time with respect to the fitness, quality, durability, performance or use of "your work"; and

(2) The providing of or failure to provide warnings or instructions.

© 2018, The Hartford
(May include copyrighted material of Insurance Services Office, Inc., with its permission)

THIS ENDORSEMENT CHANGES THE POLICY. PLEASE READ IT CAREFULLY.

THE HARTFORD

BLANKET ADDITIONAL INSURED BY CONTRACT

This endorsement modifies insurance provided under the following:

BUSINESS LIABILITY COVERAGE FORM

Except as otherwise stated in this endorsement, the terms and conditions of the Policy apply.

A. The following is added to Section **C. WHO IS AN INSURED**:

Additional Insureds When Required By Written Contract, Written Agreement Or Permit

The person(s) or organization(s) identified in Paragraphs **a**. through **f**. below are additional insureds when you have agreed, in a written contract or written agreement, or when required by a written permit issued by a state or governmental agency or subdivision or political subdivision that such person or organization be added as an additional insured on your Coverage Part, provided the injury or damage occurs subsequent to the execution of the contract or agreement, or the issuance of the permit.

A person or organization is an additional insured under this provision only for that period of time required by the contract, agreement or permit.

However, no such person or organization is an additional insured under this provision if such person or organization is included as an additional insured by any other endorsement issued by us and made a part of this Coverage Part.

The insurance afforded to such additional insured will not be broader than that which you are required by the contract, agreement, or permit to provide for such additional insured.

The insurance afforded to such additional insured only applies to the extent permitted by law.

The limits of insurance that apply to additional insureds are described in Section **D. LIABILITY AND MEDICAL EXPENSES LIMITS OF INSURANCE**. How this insurance applies when other insurance is available to an additional insured is described in the Other Insurance Condition in Section **E. LIABILITY AND MEDICAL EXPENSES GENERAL CONDITIONS**.

a. Vendors

Any person(s) or organization(s) (referred to below as vendor), but only with respect to "bodily injury" or "property damage" arising out of "your products" which are distributed or sold in the regular course of the vendor's business and only if this Coverage Part provides coverage for "bodily injury" or "property damage" included within the "products-completed operations hazard".

(1) The insurance afforded to the vendor is subject to the following additional exclusions:

This insurance does not apply to:

(a) "Bodily injury" or "property damage" for which the vendor is obligated to pay damages by reason of the assumption of liability in a contract or agreement. This exclusion does not apply to liability for damages that the vendor would have in the absence of the contract or agreement;

(b) Any express warranty unauthorized by you;

(c) Any physical or chemical change in the product made intentionally by the vendor;

(d) Repackaging, except when unpacked solely for the purpose of inspection, demonstration, testing, or the substitution of parts under instructions from the manufacturer, and then repackaged in the original container;

(e) Any failure to make such inspections, adjustments, tests or servicing as the vendor has agreed to make or normally undertakes to make in the usual course of business, in connection with the distribution or sale of the products;

(f) Demonstration, installation, servicing or repair operations, except such operations performed at the vendor's premises in connection with the sale of the product;

© 2021, The Hartford
(May include copyrighted material of Insurance Services Office, Inc., with its permission)

(g) Products which, after distribution or sale by you, have been labeled or relabeled or used as a container, part or ingredient of any other thing or substance by or for the vendor; or

(h) "Bodily injury" or "property damage" arising out of the sole negligence of the vendor for its own acts or omissions or those of its employees or anyone else acting on its behalf. However, this exclusion does not apply to:

(i) The exceptions contained in Paragraphs **(d)** or **(f)**; or

(ii) Such inspections, adjustments, tests or servicing as the vendor has agreed to make or normally undertakes to make in the usual course of business, in connection with the distribution or sale of the products.

(2) This insurance does not apply to any insured person or organization from whom you have acquired such products, or any ingredient, part or container, entering into, accompanying or containing such products.

b. Lessors Of Equipment

(1) Any person or organization from whom you lease equipment; but only with respect to their liability for "bodily injury", "property damage" or "personal and advertising injury" caused, in whole or in part, by your maintenance, operation or use of equipment leased to you by such person or organization.

(2) With respect to the insurance afforded to these additional insureds, this insurance does not apply to any "occurrence" which takes place after you cease to lease that equipment.

c. Lessors Of Land Or Premises

(1) Any person or organization from whom you lease land or premises, but only with respect to liability arising out of the ownership, maintenance or use of that part of the land or premises leased to you.

(2) With respect to the insurance afforded to these additional insureds, this insurance does not apply to:

(a) Any "occurrence" which takes place after you cease to lease that land or be a tenant in that premises; or

(b) Structural alterations, new construction or demolition operations performed by or on behalf of such person or organization.

d. Architects, Engineers Or Surveyors

(1) Any architect, engineer, or surveyor, but only with respect to liability for "bodily injury", "property damage" or "personal and advertising injury" caused, in whole or in part, by your acts or omissions or the acts or omissions of those acting on your behalf:

(a) In connection with your premises;

(b) In the performance of your ongoing operations performed by you or on your behalf; or

(c) In connection with "your work" and included within the "products-completed operations hazard", but only if:

(i) The written contract, written agreement or permit requires you to provide such coverage to such additional insured; and

(ii) This Coverage Part provides coverage for "bodily injury" or "property damage" included within the "products-completed operations hazard".

(2) With respect to the insurance afforded to these additional insureds, the following additional exclusion applies:

This insurance does not apply to "bodily injury", "property damage" or "personal and advertising injury" arising out of the rendering of or the failure to render any professional services, including:

(i) The preparing, approving, or failure to prepare or approve, maps, shop drawings, opinions, reports, surveys, field orders, change orders, designs or drawings and specifications; or

(ii) Supervisory, surveying, inspection, architectural or engineering activities.

This exclusion applies even if the claims allege negligence or other wrongdoing in the supervision, hiring, employment, training or monitoring of others by an insured, if the “bodily injury”, “property

© 2021, The Hartford
(May include copyrighted material of Insurance Services Office, Inc., with its permission)

damage", or "personal and advertising injury" arises out of the rendering of or the failure to render any professional service.

e. State Or Governmental Agency Or Subdivision Or Political Subdivision Issuing Permit

(1) Any state or governmental agency or subdivision or political subdivision, but only with respect to operations performed by you or on your behalf for which the state or governmental agency or subdivision or political subdivision has issued a permit.

(2) With respect to the insurance afforded to these additional insureds, this insurance does not apply to:

(a) "Bodily injury", "property damage" or "personal and advertising injury" arising out of operations performed for the federal government, state or municipality; or

(b) "Bodily injury" or "property damage" included within the "products-completed operations hazard".

f. Any Other Party

(1) Any other person or organization who is not in one of the categories or classes listed above in Paragraphs **a**. through **e**. above, but only with respect to liability for "bodily injury", "property damage" or "personal and advertising injury" caused, in whole or in part, by your acts or omissions or the acts or omissions of those acting on your behalf:

(a) In the performance of your ongoing operations performed by you or on your behalf;

(b) In connection with your premises owned by or rented to you; or

(c) In connection with "your work" and included within the "products-completed operations hazard", but only if:

(i) The written contract, written agreement or permit requires you to provide such coverage to such additional insured; and

(ii) This Coverage Part provides coverage for "bodily injury" or "property damage" included within the "products-completed operations hazard".

(2) With respect to the insurance afforded to these additional insureds, the following additional exclusion applies:

This insurance does not apply to "bodily injury", "property damage" or "personal and advertising injury" arising out of the rendering of, or the failure to render, any professional architectural, engineering or surveying services, including:

(a) The preparing, approving, or failure to prepare or approve, maps, shop drawings, opinions, reports, surveys, field orders, change orders, designs or drawings and specifications; or

(b) Supervisory, surveying, inspection, architectural or engineering activities.

This exclusion applies even if the claims allege negligence or other wrongdoing in the supervision, hiring, employment, training or monitoring of others by an insured, if the "bodily injury", "property damage", or "personal and advertising injury" arises out of the rendering of or the failure to render any professional service described in Paragraphs **f.(2)(a)** or **f**.**(2)(b)** above.

© 2021, The Hartford
(May include copyrighted material of Insurance Services Office, Inc., with its permission)



THIS ENDORSEMENT CHANGES THE POLICY. PLEASE READ IT CAREFULLY.

WAIVER OF OUR RIGHT TO RECOVER FROM OTHERS ENDORSEMENT - CALIFORNIA

Policy Number: 57 WEC EU6620 **Endorsement Number:**
Effective Date: 10/01/24 Effective hour is the same as stated on the Information Page of the policy.
Named Insured and Address: CITYGATE ASSOCIATES, LLC
600 COOLIDGE DR STE 150
FOLSOM CA 95630

We have the right to recover our payments from anyone liable for an injury covered by this policy. We will not enforce our right against the person or organization named in the Schedule. (This agreement applies only to the extent that you perform work under a written contract that requires you to obtain this agreement from us.)

You must maintain payroll records accurately segregating the remuneration of your employees while engaged in the work described in the Schedule.

The additional premium for this endorsement shall be 2 % of the California workers' compensation premium otherwise due on such remuneration.

SCHEDULE

Person or Organization	**Job Description**
Any person or organization for whom you are required by written contract or agreement to obtain this waiver of rights from us	

Countersigned by _____
Authorized Representative

CITYGATE
ASSOCIATES

600 COOLIDGE DRIVE, SUITE 150 ▪ FOLSOM, CA 95630 ▪ PH (916) 458-5100 ▪ FX (916) 983-2090

July 28, 2025

Village of Northbrook
1225 Cedar Lane
Northbrook, Illinois 60062

RE: POLICE DEPARTMENT STAFFING AND STRATEGIC PLAN

Hello,

In regard to COI for Citygate Associates, LLC (Citygate) and all work that will be completed for and at the City of Northbrook, IL, Citygate does not own any vehicles and Citygate will only use leased vehicles that are covered under the schedule provided to its insurance carrier.

Here is our Auto Policy with Hartford Underwriters Insurance Company: 57SBABE5G1W

* * *

Sincerely,

Chad Jackson, MBA
President

MEMORANDUM

To: Village Manager Cara Pavlicek
From: Director of Development and Planning Services Amy McEwan
Date: 2025-08-12
Subject: Public Hearing to consider a request for a Pre-Annexation Agreement for 3803 Oak Avenue (PPA-25-05)

Overview
A public hearing has been scheduled to consider a pre-annexation agreement for a single-family lot in the Mission Hills neighborhood of Northbrook.

Fiscal Impact
Recapture fees have been paid in full.

Recommendation
Conduct a public hearing.

Background

On August 12, 2025, the Board of Trustees is scheduled to conduct a public hearing of an application submitted by Richard Little and Vanessa Walton as the owners of the property commonly known as 3803 Oak Avenue. The applicant is requesting to consider the approval of a pre-annexation agreement to allow connecting to the Village water supply. Approval of a pre-annexation agreement is required because the property is not contiguous to the corporate limits of the Village.

If the Board finds this agreement acceptable, they may authorize the execution of the agreement by adopting the attached resolution.

A public hearing is required before the Village Board to grant approval of a pre-annexation agreement. Notice of the public hearing for the 3803 Oak Avenue pre-annexation agreement was published in the July 24, 2025 edition of the *Northbrook Star*.

The Subject Property is:

- located on the southeast corner of Oak Avenue, and Cumberland Avenue;
- approximately 31,066 square feet in size and currently improved with a single family home;
- designated as appropriate for single family residential in the Village's Comprehensive Plan;

- surrounded by unincorporated single-family properties to the north, east, and west; and to the south is the Mission Hills condominium complex;
- not located within the 100-year flood plain; and
- not located in proximity to any areas identified in the Master Stormwater Management Plan.

The concept of allowing property owners in the Mission Hills Estates area to enter into pre-annexation agreements was approved in general terms by the Board of Trustees on January 22, 2008 as part of the authorization to create a recapture ordinance for the extension of public water into this area despite the fact that it is not within the Village. The recapture ordinance (Ordinance No. 08-06) established a procedure whereby properties that are within the Mission Hills Estates area could tie into the Village's water system, even if they were not eligible for annexation at this time (i.e. contiguous to corporate limits) so long as:

1. They enter into a pre-annexation agreement stipulating that they would annex as soon as they were eligible to do so; and
2. They pay the recapture fees prior to making the connection to the Village water system.

The Board has approved pre-annexation agreements for a number of properties in the Mission Hills Estates.

The single-family home on the site will be demolished and the applicant has filed a building permit application with Cook County for a new single-family home. We have included a series of exhibits depicting the existing conditions near the property, including aerial images and topography. The properties in the vicinity are all approximately 20,000 – 30,000 square feet in area, which is consistent with the Village R-3 zoning district. Staff reviewed the architectural site plan showing compliance with the bulk requirements of the R-3 district in the Village of Northbrook, except the corner side yard along the west property line.

Corner side yard is located adjacent to an unimproved portion of Cumberland Avenue, which is under the jurisdiction of Northfield Township Road District. Per correspondence received from the Northfield Township Road District (attached), they have determined that this portion of the right-of-way would remain undeveloped due to the presence of utility lines. Therefore, for zoning purposes, the Village staff has determined the west yard to be an interior side yard, which will be in compliance with the requirements of R-3 District.

The pre-annexation agreement has been reviewed by the Village Attorney. Staff sees no issues with the approval of the pre-annexation agreement as the action would be consistent with Village policies. The Applicant has paid the Village recapture fee assessed for this property in its entirety. A building permit will be required prior to connecting to the Village water service.

The Applicant and staff will attend the August 12, 2025 Board of Trustees meeting to answer any questions that may arise.

Supplemental - Applicant Submittal - 3803 Oak
Supplemental - Maps & Photos - 3803 Oak
Supplemental - Northfield Township-Cumberland ROW - 3803 Oak
Supplemental - BOT Presentation - 3803 Oak

THOMAS ARCHITECTS
www.thomasarch.com

July 1, 2025

Village of Northbrook
Development and Planning Services
1225 Cedar Lane
Northbrook, IL 60062

RE: Pre Annexation Narrative
3803 Oak Ave, Northbrook, IL

Dear Reviewer,

We respectfully submit this letter on behalf of the homeowners, Rich and Vanessa Little, as the written explanation for the proposed pre-annexation application to the Village of Northbrook.

The project includes a new single family residence located at the address referenced above. The owners are requesting connection to the Village of Northbrook Mission Hills Water System for their new home and understand that in order to do so, they will need to apply for a pre-annexation into the Village of Northbrook.

The existing home will be demolished and a new residence will be built in its place. The proposed architectural plans and plat of survey are included for reference. It is our understanding that the home, when annexed, will be within the R-3 zoning district for the Village of Northbrook, and should meet the bulk requirements of this district. Please note that there is a small section of unimproved right of way directly west of this property, and in discussions with Cook County, the west side of the subject property is considered a corner side yard. The request to reduce the west corner side setback from 25' to 15'-1" was presented and approved by the Cook County Zoning Board of Appeals on July 9, 2025.

The owners are aware of the recapture fee associated with tapping into the Mission Hills Water System including all applicable fees and interest.

Please feel free to contact Thomas Architects with any further comments or questions that you may have regarding this project.

Sincerely,

Thomas Architects

Thomas Budzik, AIA

2800 S River Rd, Suite 305
Des Plaines, IL 60018
O| 877 . 205 . 3799

PRE-ANNEXATION EVALUATION FORM

Current Property Owner

Legal Name of Owner or Ownership Entity: RICHARD LITTLE & VANESSA WALTON
Primary Contact: RICHARD LITTLE
Address: 120 CHESTNUT ROAD
City, State, Zip: NORTHBROOK, IL 60062
Phone: 2244303444
Email: Richard@serenitywm.com

Property Information *(if more than one parcel is involved in the request please include the information for all parcels)*

Site Location/Address: 3803 OAK AVE
Property Index Number(s): 0 4 - 0 7 -4 0 7 -0 0 1 -0 0 0 0
Size of Property: .071 ACRE (square feet/acres)
Size of Building Space, if applicable: _____ (square feet)
County Zoning: R-4
Proposed Zoning: R-4
Comprehensive Plan Designation: _____
Current Principal Use(s): SINGLE FAMILY RESIDENCE
Current Accessory Use(s): _____
Lot Area: 30825 Lot Width: 100' Lot Depth: 318.21'

Is the property held in trust? □ Yes ☒ No *If yes, please append names and signatures of all beneficiaries*
Is the property under contract? □ Yes ☒ No *If yes, please append name and signature of contract purchaser(s)*

Owner:
Signature
Richard Little
Print Name (and title, if signing on behalf of corporation or trust)

Owner:
Signature
Vanessa Walton
Print Name (and title, if signing on behalf of corporation or trust)

Doc#. 2502430016 Fee: $107.00
MONICA GORDON
COOK COUNTY CLERK'S OFFICE
Date 1/24/2025 9:29 AM Pg 1 of 3

Dec ID 20250101694083
ST/Co Stamp 1-315-381-680 ST Tax $499.00 CO Tax $249.50

WARRANTY DEED

After Recording Mail To:

Gryll Law
c/o: Brian D. Gryll
6703 N Cicero Ave
Lincolnwood, IL 60712

Send Subsequent Tax Bills To:

Richard Little & Vanessa Walton
120 Chestnut Road
Northbrook, IL 60062

THE GRANTORS, ILYA GILMAN AND FRANCINE BLETNITSKY GILMAN, husband and wife , of the CITY of NORTHBROOK, County of COOK, State of ILLINOIS, for and in consideration of ten dollars ($10.00) and other valuable consideration in hand paid, convey and warrant to:

RICHARD LITTLE AND
VANESSA WALTON a married couple

of the city of Northbrook , County of Cook , State of Illinois, not as Joint Tenants, not as Tenants in Common, but as TENANTS BY THE ENTIRETY, the following described Real Estate situated in the County of COOK in the State of Illinois:

hereby releasing and waiving all rights under and by virtue of the Homestead Exemption Laws of the State of Illinois. TO HAVE AND TO HOLD, said premises not in Tenancy in Common, but as TENANTS BY THE ENTIRETY, forever.

Permanent Index Number(s): 04-07-407-001-0000
Address of the Real Estate: 3803 Oak Avenue, Northbrook, IL 60062

SUBJECT TO: covenants, conditions and restrictions of record; public and utility easements; and subject only to real estate taxes for 2024 and subsequent years.

CT 24GNUD6291060DB
1/1

Property of Cook County Clerk's Office

DATED this 11 day of July, 2024

ILYA GILMAN

FRANCINE BLETNITSKY GILMAN

STATE OF IL }
COUNTY OF Cook } **SS.**

I, the undersigned, a Notary Public in and for said County, in the State aforesaid, DO HEREBY CERTIFY that **ILYA GILMAN AND FRANCINE BLETNITSKY GILMAN,** personally known to me to be the same persons whose names are subscribed to the foregoing instrument, appeared before me this day in person, and acknowledged that they signed, sealed and delivered this said instrument as their free and voluntary act, for the uses and purposes therein set forth, including the release and waiver of the right of homestead.

Given under my hand and official seal, this 11 day of July, 2024.

VIKTORIIA ZAMRII
Official Seal
Notary Public - State of Illinois
My Commission Expires Feb 9, 2027

NOTARY PUBLIC

This instrument prepared by: SHVARTSMAN LAW OFFICE,
3400 Dundee Rd Suite 215,
Northbrook, Illinois 60062.

Property of Cook County Clerk's Office

CHICAGO TITLE COMPANY

LEGAL DESCRIPTION

Order No.: 24GND629106NB

For APN/Parcel ID(s): 04-07-407-001-0000

LOT 14 IN BLOCK 3 IN ARTHUR T. MCINTOSH AND COMPANY'S MISSION HILLS ESTATES, BEING A SUBDIVISION OF THE SOUTH 1/2 OF THE SOUTHEAST 1/4 AND THAT PART OF THE SOUTH 1/2 OF THE SOUTHWEST 1/4 WHICH LIES EAST OF SANDERS ROAD OF SECTION 7, TOWNSHIP 42 NORTH, RANGE 12, EAST OF THE THIRD PRINCIPAL MERIDIAN, ACCORDING TO THE PLAT THEREOF REGISTERED IN THE OFFICE OF THE REGISTRAR OF TORRENS TITLES OF COOK COUNTY, ILLINOIS AS DOCUMENT LR1282197 IN COOK COUNTY, ILLINOIS.

Property of Cook County Clerk's Office

ALTA OWNER'S POLICY OF TITLE INSURANCE

issued by:

CHICAGO TITLE INSURANCE COMPANY

Policy Number:

24GND629106NB

This policy, when issued by the Company with a Policy Number and the Date of Policy, is valid even if this policy or any endorsement to this policy is issued electronically or lacks any signature.

Any notice of claim and any other notice or statement in writing required to be given to the Company under this policy must be given to the Company at the address shown in Condition 17.

COVERED RISKS

SUBJECT TO THE EXCLUSIONS FROM COVERAGE, THE EXCEPTIONS FROM COVERAGE CONTAINED IN SCHEDULE B, AND THE CONDITIONS, Chicago Title Insurance Company, a Florida corporation (the "Company"), insures as of the Date of Policy and, to the extent stated in Covered Risks 9 and 10, after the Date of Policy, against loss or damage, not exceeding the Amount of Insurance, sustained or incurred by the Insured by reason of:

1. The Title being vested other than as stated in Schedule A.
2. Any defect in or lien or encumbrance on the Title. Covered Risk 2 includes, but is not limited to, insurance against loss from:
   a. a defect in the Title caused by:
      i. forgery, fraud, undue influence, duress, incompetency, incapacity, or impersonation;
      ii. the failure of a person or Entity to have authorized a transfer or conveyance;
      iii. a document affecting the Title not properly authorized, created, executed, witnessed, sealed, acknowledged, notarized (including by remote online notarization), or delivered;
      iv. a failure to perform those acts necessary to create a document by electronic means authorized by law;
      v. a document executed under a falsified, expired, or otherwise invalid power of attorney;
      vi. a document not properly filed, recorded, or indexed in the Public Records, including the failure to have performed those acts by electronic means authorized by law;
      vii. a defective judicial or administrative proceeding; or
      viii. the repudiation of an electronic signature by a person that executed a document because the electronic signature on the document was not valid under applicable electronic transactions law.
   b. the lien of real estate taxes or assessments imposed on the Title by a governmental authority due or payable, but unpaid.
   c. the effect on the Title of an encumbrance, violation, variation, adverse circumstance, boundary line overlap, or encroachment (including an encroachment of an improvement across the boundary lines of the Land), but only if the encumbrance, violation, variation, adverse circumstance, boundary line overlap, or encroachment would have been disclosed by an accurate and complete land title survey of the Land.
3. Unmarketable Title.
4. No right of access to and from the Land.
5. A violation or enforcement of a law, ordinance, permit, or governmental regulation (including those relating to building and zoning), but only to the extent of the violation or enforcement described by the enforcing governmental authority in an Enforcement Notice that identifies a restriction, regulation, or prohibition relating to:
   a. the occupancy, use, or enjoyment of the Land;
   b. the character, dimensions, or location of an improvement on the Land;
   c. the subdivision of the Land; or
   d. environmental remediation or protection on the Land.
6. An enforcement of a governmental forfeiture, police, regulatory, or national security power, but only to the extent of the enforcement described by the enforcing governmental authority in an Enforcement Notice.

Copyright American Land Title Association. All rights reserved.

The use of this Form (or any derivative thereof) is restricted to ALTA licensees and ALTA members in good standing as of the date of use. All other uses are prohibited. Reprinted under license from the American Land Title Association.

AMERICAN LAND TITLE ASSOCIATION

7. An exercise of the power of eminent domain, but only to the extent:
   a. of the exercise described in an Enforcement Notice; or
   b. the taking occurred and is binding on a purchaser for value without Knowledge.
8. An enforcement of a PACA-PSA Trust, but only to the extent of the enforcement described in an Enforcement Notice.
9. The Title being vested other than as stated in Schedule A, the Title being defective, or the effect of a court order providing an alternative remedy:
   a. resulting from the avoidance, in whole or in part, of any transfer of all or any part of the Title to the Land or any interest in the Land occurring prior to the transaction vesting the Title because that prior transfer constituted a:
      i. fraudulent conveyance, fraudulent transfer, or preferential transfer under federal bankruptcy, state insolvency, or similar state or federal creditors' rights law; or
      ii. voidable transfer under the Uniform Voidable Transactions Act; or
   b. because the instrument vesting the Title constitutes a preferential transfer under federal bankruptcy, state insolvency, or similar state or federal creditors' rights law by reason of the failure:
      i. to timely record the instrument vesting the Title in the Public Records after execution and delivery of the instrument to the Insured; or
      ii. of the recording of the instrument vesting the Title in the Public Records to impart notice of its existence to a purchaser for value or to a judgment or lien creditor.
10. Any defect in or lien or encumbrance on the Title or other matter included in Covered Risks 1 through 9 that has been created or attached or has been filed or recorded in the Public Records subsequent to the Date of Policy and prior to the recording of the deed or other instrument vesting the Title in the Public Records.

DEFENSE OF COVERED CLAIMS

The Company will also pay the costs, attorneys' fees, and expenses incurred in defense of any matter insured against by this policy, but only to the extent provided in the Conditions.

Chicago Title Insurance Company

By:



Michael J. Nolan, President

Attest:



Marjorie Nemzura, Secretary

Copyright American Land Title Association. All rights reserved.

The use of this Form (or any derivative thereof) is restricted to ALTA licensees and ALTA members in good standing as of the date of use. All other uses are prohibited. Reprinted under license from the American Land Title Association.

EXCLUSIONS FROM COVERAGE

The following matters are excluded from the coverage of this policy, and the Company will not pay loss or damage, costs, attorneys' fees, or expenses that arise by reason of:

1. a. any law, ordinance, permit, or governmental regulation (including those relating to building and zoning) that restricts, regulates, prohibits, or relates to:
   i. the occupancy, use, or enjoyment of the Land;
   ii. the character, dimensions, or location of any improvement on the Land;
   iii. the subdivision of land; or
   iv. environmental remediation or protection.
   b. any governmental forfeiture, police, regulatory, or national security power.
   c. the effect of a violation or enforcement of any matter excluded under Exclusion 1.a. or 1.b.

   Exclusion 1 does not modify or limit the coverage provided under Covered Risk 5 or 6.
2. Any power of eminent domain. Exclusion 2 does not modify or limit the coverage provided under Covered Risk 7.
3. Any defect, lien, encumbrance, adverse claim, or other matter:
   a. created, suffered, assumed, or agreed to by the Insured Claimant;
   b. not Known to the Company, not recorded in the Public Records at the Date of Policy, but Known to the Insured Claimant and not disclosed in writing to the Company by the Insured Claimant prior to the date the Insured Claimant became an Insured under this policy;
   c. resulting in no loss or damage to the Insured Claimant;
   d. attaching or created subsequent to the Date of Policy (Exclusion 3.d. does not modify or limit the coverage provided under Covered Risk 9 or 10); or
   e. resulting in loss or damage that would not have been sustained if consideration sufficient to qualify the Insured named in Schedule A as a bona fide purchaser had been given for the Title at the Date of Policy.
4. Any claim, by reason of the operation of federal bankruptcy, state insolvency, or similar creditors' rights law, that the transaction vesting the Title as shown in Schedule A is a:
   a. fraudulent conveyance or fraudulent transfer;
   b. voidable transfer under the Uniform Voidable Transactions Act; or
   c. preferential transfer:
      i. to the extent the instrument of transfer vesting the Title as shown in Schedule A is not a transfer made as a contemporaneous exchange for new value; or
      ii. for any other reason not stated in Covered Risk 9.b.
5. Any claim of a PACA-PSA Trust. Exclusion 5 does not modify or limit the coverage provided under Covered Risk 8.
6. Any lien on the Title for real estate taxes or assessments, imposed or collected by a governmental authority that becomes due and payable after the Date of Policy. Exclusion 6 does not modify or limit the coverage provided under Covered Risk 2.b.
7. Any discrepancy in the quantity of the area, square footage, or acreage of the Land or of any improvement to the Land.

Copyright American Land Title Association. All rights reserved.

The use of this Form (or any derivative thereof) is restricted to ALTA licensees and ALTA members in good standing as of the date of use. All other uses are prohibited. Reprinted under license from the American Land Title Association.

Transaction Identification Data, for which the Company assumes no liability as set forth in Condition 9.d.:

Issued By: Yelena R. Shvartsman
3400 Dundee Suite 215
Northbrook, IL 60062

Property Address: 3803 Oak Ave, Northbrook, IL 60062

SCHEDULE A

Policy Number: 24GND629106NB

Date of Policy	Amount of Insurance
January 24, 2025	$499,000.00

1. The Insured is:

   Richard Little and Vanessa Walton

2. The estate or interest in the Land insured by this policy is:

   Fee Simple

3. The Title is vested in:

   Richard Little and Vanessa Walton, a married couple, not as joint tenants, not as tenants in common, but as tenants by the entirety

4. The Land is described as follows:

   SEE EXHIBIT "A" ATTACHED HERETO AND MADE A PART HEREOF

THIS POLICY VALID ONLY IF SCHEDULE B IS ATTACHED

END OF SCHEDULE A

Copyright American Land Title Association. All rights reserved.

The use of this Form (or any derivative thereof) is restricted to ALTA licensees and ALTA members in good standing as of the date of use. All other uses are prohibited. Reprinted under license from the American Land Title Association.

EXHIBIT "A"

Legal Description

LOT 14 IN BLOCK 3 IN ARTHUR T. MCINTOSH AND COMPANY'S MISSION HILLS ESTATES, BEING A SUBDIVISION OF THE SOUTH 1/2 OF THE SOUTHEAST 1/4 AND THAT PART OF THE SOUTH 1/2 OF THE SOUTHWEST 1/4 WHICH LIES EAST OF SANDERS ROAD OF SECTION 7, TOWNSHIP 42 NORTH, RANGE 12, EAST OF THE THIRD PRINCIPAL MERIDIAN, ACCORDING TO THE PLAT THEREOF REGISTERED IN THE OFFICE OF THE REGISTRAR OF TORRENS TITLES OF COOK COUNTY, ILLINOIS AS DOCUMENT LR1282197 IN COOK COUNTY, ILLINOIS.

Copyright American Land Title Association. All rights reserved.

The use of this Form (or any derivative thereof) is restricted to ALTA licensees and ALTA members in good standing as of the date of use. All other uses are prohibited. Reprinted under license from the American Land Title Association.

SCHEDULE B
EXCEPTIONS FROM COVERAGE

Some historical land records contain Discriminatory Covenants that are illegal and unenforceable by law. This policy treats any Discriminatory Covenant in a document referenced in Schedule B as if each Discriminatory Covenant is redacted, repudiated, removed, and not republished or recirculated. Only the remaining provisions of the document are excepted from coverage.

This policy does not insure against loss or damage and the Company will not pay costs, attorneys' fees, or expenses resulting from the terms and conditions of any lease or easement identified in Schedule A, and the following matters:

1. **Rights or claims of parties in possession not shown by Public Records.**

2. **Any encroachment, encumbrance, violation, variation, or adverse circumstance affecting the title that would be disclosed by an accurate and complete land survey of the Land.**

3. **Easements, or claims of easements, not shown by the Public Records.**

4. **Any lien, or right to a lien, for services, labor or material heretofore or hereafter furnished, imposed by law and not shown by the Public Records.**

5. **Taxes or special assessments which are not shown as existing liens by the Public Records.**

6. **We should be furnished a properly executed ALTA statement and, unless the land insured is a condominium unit, a survey if available. Matters disclosed by the above documentation will be shown specifically.**

7. Any defect, lien, encumbrance, adverse claim, or other matter that appears for the first time in the Public Records or is created, attaches, or is disclosed between the Commitment Date and the date on which all of the Schedule B, Part I-Requirements are met.

8.

1. Taxes for the year(s) 2024 and 2025
   2025 taxes are not yet due or payable.

1A. Note: 2024 first installment not yet due or payable

Perm tax#	Pcl	Year	1st Inst	Stat	2nd Inst	Stat
04-07-407-001-0000	1 of 1		2023	$5,431.57	Paid	$3,866.14 Paid
		2024	$5,113.74	Unpaid		

9. Restrictions as to location of water wells and waste disposal systems as shown on the plat document number 1282197.

END OF SCHEDULE B

Copyright American Land Title Association. All rights reserved.

The use of this Form (or any derivative thereof) is restricted to ALTA licensees and ALTA members in good standing as of the date of use. All other uses are prohibited. Reprinted under license from the American Land Title Association.

SCHEDULE B
EXCEPTIONS FROM COVERAGE
(continued)

Title Insurance Agent:

Yelena R. Shvartsman
3400 Dundee Suite 215
Northbrook, IL 60062
Phone: (847)714-0210
Fax: (847)714-0210

Copyright American Land Title Association. All rights reserved.

The use of this Form (or any derivative thereof) is restricted to ALTA licensees and ALTA members in good standing as of the date of use. All other uses are prohibited. Reprinted under license from the American Land Title Association.

CONDITIONS

1. DEFINITION OF TERMS

In this policy, the following terms have the meanings given to them below. Any defined term includes both the singular and the plural, as the context requires:

a. "Affiliate": An Entity:
   i. that is wholly owned by the Insured;
   ii. that wholly owns the Insured; or
   iii. if that Entity and the Insured are both wholly owned by the same person or entity.

b. "Amount of Insurance": The Amount of Insurance stated in Schedule A, as may be increased by Condition 8.d. or decreased by Condition 10 or 11; or increased or decreased by endorsements to this policy.

c. "Date of Policy": The Date of Policy stated in Schedule A.

d. "Discriminatory Covenant": Any covenant, condition, restriction, or limitation that is unenforceable under applicable law because it illegally discriminates against a class of individuals based on personal characteristics such as race, color, religion, sex, sexual orientation, gender identity, familial status, disability, national origin, or other legally protected class.

e. "Enforcement Notice": A document recorded in the Public Records that describes any part of the Land and:
   i. is issued by a governmental agency that identifies a violation or enforcement of a law, ordinance, permit, or governmental regulation;
   ii. is issued by a holder of the power of eminent domain or a governmental agency that identifies the exercise of a governmental power; or
   iii. asserts a right to enforce a PACA-PSA Trust.

f. "Entity": A corporation, partnership, trust, limited liability company, or other entity authorized by law to own title to real property in the State where the Land is located.

g. "Insured":
   i. (a). The Insured named in Item 1 of Schedule A;
      (b). the successor to the Title of an Insured by operation of law as distinguished from purchase, including heirs, devisees, survivors, personal representatives, or next of kin;
      (c). the successor to the Title of an Insured resulting from dissolution, merger, consolidation, distribution, or reorganization;
      (d). the successor to the Title of an Insured resulting from its conversion to another kind of Entity; or
      (e). the grantee of an Insured under a deed or other instrument transferring the Title, if the grantee is:
         (1). an Affiliate;
         (2). a trustee or beneficiary of a trust created by a written instrument established for estate planning purposes by an Insured;
         (3). a spouse who receives the Title because of a dissolution of marriage;
         (4). a transferee by a transfer effective on the death of an Insured as authorized by law; or
         (5). another Insured named in Item 1 of Schedule A.
   ii. The Company reserves all rights and defenses as to any successor or grantee that the Company would have had against any predecessor Insured.

h. "Insured Claimant": An Insured claiming loss or damage arising under this policy.

i. "Knowledge" or "Known": Actual knowledge or actual notice, but not constructive notice imparted by the Public Records.

j. "Land": The land described in Item 4 of Schedule A and improvements located on that land at the Date of Policy that by State law constitute real property. The term "Land" does not include any property beyond that described in Schedule A, nor any right, title, interest, estate, or easement in any abutting street, road, avenue, alley, lane, right-of-way, body of water, or waterway, but does not modify or limit the extent that a right of access to and from the Land is insured by this policy.

k. "Mortgage": A mortgage, deed of trust, trust deed, security deed, or other real property security instrument, including one evidenced by electronic means authorized by law.

l. "PACA-PSA Trust": A trust under the federal Perishable Agricultural Commodities Act or the federal Packers and Stockyards Act or a similar State or federal law.

m. "Public Records": The recording or filing system established under State statutes in effect at the Date of Policy under which a document must be recorded or filed to impart constructive notice of matters relating to the Title to a purchaser for value without Knowledge. The term "Public Records" does not include any other recording or filing system, including any pertaining to environmental remediation or protection, planning, permitting, zoning, licensing, building, health, public safety, or national security matters.

n. "State": The state or commonwealth of the United States within whose exterior boundaries the Land is located. The term "State" also includes the District of Columbia, the Commonwealth of Puerto Rico, the U.S. Virgin Islands, and Guam.

o. "Title": The estate or interest in the Land identified in Item 2 of Schedule A.

p. "Unmarketable Title": The Title affected by an alleged or apparent matter that would permit a prospective purchaser or lessee of the Title or a lender on the Title to be released from the obligation to purchase, lease, or lend if there is a contractual condition requiring the delivery of marketable title.

Copyright American Land Title Association. All rights reserved.

The use of this Form (or any derivative thereof) is restricted to ALTA licensees and ALTA members in good standing as of the date of use. All other uses are prohibited. Reprinted under license from the American Land Title Association.

AMERICAN LAND TITLE ASSOCIATION

(continued)

2. CONTINUATION OF COVERAGE

This policy continues as of the Date of Policy in favor of an Insured, so long as the Insured:

a. retains an estate or interest in the Land;

b. owns an obligation secured by a purchase money Mortgage given by a purchaser from the Insured; or

c. has liability for warranties given by the Insured in any transfer or conveyance of the Insured's Title.

Except as provided in Condition 2, this policy terminates and ceases to have any further force or effect after the Insured conveys the Title. This policy does not continue in force or effect in favor of any person or entity that is not the Insured and acquires the Title or an obligation secured by a purchase money Mortgage given to the Insured.

3. NOTICE OF CLAIM TO BE GIVEN BY INSURED CLAIMANT

The Insured must notify the Company promptly in writing if the Insured has Knowledge of:

a. any litigation or other matter for which the Company may be liable under this policy; or

b. any rejection of the Title as Unmarketable Title.

If the Company is prejudiced by the failure of the Insured Claimant to provide prompt notice, the Company's liability to the Insured Claimant under this policy is reduced to the extent of the prejudice.

4. PROOF OF LOSS

The Company may, at its option, require as a condition of payment that the Insured Claimant furnish a signed proof of loss. The proof of loss must describe the defect, lien, encumbrance, adverse claim, or other matter insured against by this policy that constitutes the basis of loss or damage and must state, to the extent possible, the basis of calculating the amount of the loss or damage.

5. DEFENSE AND PROSECUTION OF ACTIONS

a. Upon written request by the Insured and subject to the options contained in Condition 7, the Company, at its own cost and without unreasonable delay, will provide for the defense of an Insured in litigation in which any third party asserts a claim covered by this policy adverse to the Insured. This obligation is limited to only those stated causes of action alleging matters insured against by this policy. The Company has the right to select counsel of its choice (subject to the right of the Insured to object for reasonable cause) to represent the Insured as to those covered causes of action. The Company is not liable for and will not pay the fees of any other counsel. The Company will not pay any fees, costs, or expenses incurred by the Insured in the defense of any cause of action that alleges matters not insured against by this policy.

b. The Company has the right, in addition to the options contained in Condition 7, at its own cost, to institute and prosecute any action or proceeding or to do any other act that, in its opinion, may be necessary or desirable to establish the Title, as insured, or to prevent or reduce loss or damage to the Insured. The Company may take any appropriate action under the terms of this policy, whether or not it is liable to the Insured. The Company's exercise of these rights is not an admission of liability or waiver of any provision of this policy. If the Company exercises its rights under Condition 5.b., it must do so diligently.

c. When the Company brings an action or asserts a defense as required or permitted by this policy, the Company may pursue the litigation to a final determination by a court having jurisdiction. The Company reserves the right, in its sole discretion, to appeal any adverse judgment or order.

6. DUTY OF INSURED CLAIMANT TO COOPERATE

a. When this policy permits or requires the Company to prosecute or provide for the defense of any action or proceeding and any appeals, the Insured will secure to the Company the right to prosecute or provide defense in the action or proceeding, including the right to use, at its option, the name of the Insured for this purpose.

When requested by the Company, the Insured, at the Company's expense, must give the Company all reasonable aid in:

i. securing evidence, obtaining witnesses, prosecuting or defending the action or proceeding, or effecting settlement; and

ii. any other lawful act that in the opinion of the Company may be necessary or desirable to establish the Title or any other matter, as insured.

If the Company is prejudiced by any failure of the Insured to furnish the required cooperation, the Company's liability and obligations to the Insured under this policy terminate, including any obligation to defend, prosecute, or continue any litigation, regarding the matter requiring such cooperation.

b. The Company may reasonably require the Insured Claimant to submit to examination under oath by any authorized representative of the Company and to produce for examination, inspection, and copying, at such reasonable times and places as may be designated by the authorized representative of the Company, all records, in whatever medium maintained, including books, ledgers, checks, memoranda, correspondence, reports, e-mails, disks, tapes, and videos, whether bearing a date before or after the Date of Policy, that reasonably pertain to the loss or damage. Further, if requested by any authorized representative of the Company, the Insured Claimant must grant its permission, in writing, for any authorized representative of the Company to examine, inspect, and copy all the records in the custody or control of a third party that reasonably pertain to the loss or damage. No information designated in writing as confidential by the Insured Claimant provided to the Company pursuant to Condition 6 will be later disclosed to others unless, in the reasonable judgment of the Company, disclosure is necessary in the administration of the claim or required by law. Any failure of the Insured Claimant to submit for examination under oath, produce any reasonably requested information, or grant permission to secure reasonably necessary information from third parties as required in Condition 6.b., unless prohibited by law, terminates any liability of the Company under this policy as to that claim.

7. OPTIONS TO PAY OR OTHERWISE SETTLE CLAIMS; TERMINATION OF LIABILITY

In case of a claim under this policy, the Company has the following additional options:

a. *To Pay or Tender Payment of the Amount of Insurance*

Copyright American Land Title Association. All rights reserved.

The use of this Form (or any derivative thereof) is restricted to ALTA licensees and ALTA members in good standing as of the date of use. All other uses are prohibited. Reprinted under license from the American Land Title Association.

(continued)

To pay or tender payment of the Amount of Insurance under this policy. In addition, the Company will pay any costs, attorneys' fees, and expenses incurred by the Insured Claimant that were authorized by the Company up to the time of payment or tender of payment and that the Company is obligated to pay.

Upon the exercise by the Company of this option provided for in Condition 7.a., the Company's liability and obligations to the Insured under this policy terminate, including any obligation to defend, prosecute, or continue any litigation.

b. *To Pay or Otherwise Settle with Parties other than the Insured or with the Insured Claimant*

i. To pay or otherwise settle with parties other than the Insured for or in the name of the Insured Claimant. In addition, the Company will pay any costs, attorneys' fees, and expenses incurred by the Insured Claimant that were authorized by the Company up to the time of payment and that the Company is obligated to pay; or

ii. To pay or otherwise settle with the Insured Claimant the loss or damage provided for under this policy. In addition, the Company will pay any costs, attorneys' fees, and expenses incurred by the Insured Claimant that were authorized by the Company up to the time of payment and that the Company is obligated to pay.

Upon the exercise by the Company of either option provided for in Condition 7.b., the Company's liability and obligations to the Insured under this policy for the claimed loss or damage terminate, including any obligation to defend, prosecute, or continue any litigation.

8. CONTRACT OF INDEMNITY; DETERMINATION AND EXTENT OF LIABILITY

This policy is a contract of indemnity against actual monetary loss or damage sustained or incurred by an Insured Claimant who has suffered loss or damage by reason of matters insured against by this policy. This policy is not an abstract of the Title, report of the condition of the Title, legal opinion, opinion of the Title, or other representation of the status of the Title. All claims asserted under this policy are based in contract and are restricted to the terms and provisions of this policy. The Company is not liable for any claim alleging negligence or negligent misrepresentation arising from or in connection with this policy or the determination of the insurability of the Title.

a. The extent of liability of the Company for loss or damage under this policy does not exceed the lesser of:

i. the Amount of Insurance; or

ii. the difference between the fair market value of the Title, as insured, and the fair market value of the Title subject to the matter insured against by this policy.

b. Except as provided in Condition 8.c. or 8.d., the fair market value of the Title in Condition 8.a.ii. is calculated using the date the Insured discovers the defect, lien, encumbrance, adverse claim, or other matter insured against by this policy.

c. If, at the Date of Policy, the Title to all of the Land is void by reason of a matter insured against by this policy, then the Insured Claimant may, by written notice given to the Company, elect to use the Date of Policy as the date for calculating the fair market value of the Title in Condition 8.a.ii.

d. If the Company pursues its rights under Condition 5.b. and is unsuccessful in establishing the Title, as insured:

i. the Amount of Insurance will be increased by Fifteen Percent (15%); and

ii. the Insured Claimant may, by written notice given to the Company, elect, as an alternative to the dates set forth in Condition 8.b. or, if it applies, 8.c., to use either the date the settlement, action, proceeding, or other act described in Condition 5.b. is concluded or the date the notice of claim required by Condition 3 is received by the Company as the date for calculating the fair market value of the Title in Condition 8.a.ii.

e. In addition to the extent of liability for loss or damage under Conditions 8.a. and 8.d., the Company will also pay the costs, attorneys' fees, and expenses incurred in accordance with Conditions 5 and 7.

9. LIMITATION OF LIABILITY

a. The Company fully performs its obligations and is not liable for any loss or damage caused to the Insured if the Company accomplishes any of the following in a reasonable manner:

i. removes the alleged defect, lien, encumbrance, adverse claim, or other matter;

ii. cures the lack of a right of access to and from the Land; or

iii. cures the claim of Unmarketable Title,

all as insured. The Company may do so by any method, including litigation and the completion of any appeals.

b. The Company is not liable for loss or damage arising out of any litigation, including litigation by the Company or with the Company's consent, until a State or federal court having jurisdiction makes a final, non-appealable determination adverse to the Title.

c. The Company is not liable for loss or damage to the Insured for liability voluntarily assumed by the Insured in settling any claim or suit without the prior written consent of the Company.

d. The Company is not liable for the content of the Transaction Identification Data, if any.

10. REDUCTION OR TERMINATION OF INSURANCE

All payments under this policy, except payments made for costs, attorneys' fees, and expenses, reduce the Amount of Insurance by the amount of the payment.

11. LIABILITY NONCUMULATIVE

The Amount of Insurance will be reduced by any amount the Company pays under any policy insuring a Mortgage to which exception is taken in Schedule B or to which the Insured has agreed, assumed, or taken subject, or which is executed by an Insured after the Date of Policy and which is a charge or lien on the Title, and the amount so paid will be deemed a payment to the Insured under this policy.

Copyright American Land Title Association. All rights reserved.

The use of this Form (or any derivative thereof) is restricted to ALTA licensees and ALTA members in good standing as of the date of use. All other uses are prohibited. Reprinted under license from the American Land Title Association.

(continued)

12. PAYMENT OF LOSS

When liability and the extent of loss or damage are determined in accordance with the Conditions, the Company will pay the loss or damage within thirty (30) days.

13. COMPANY'S RECOVERY AND SUBROGATION RIGHTS UPON SETTLEMENT AND PAYMENT

a. If the Company settles and pays a claim under this policy, it is subrogated and entitled to the rights and remedies of the Insured Claimant in the Title and all other rights and remedies in respect to the claim that the Insured Claimant has against any person, entity, or property to the fullest extent permitted by law, but limited to the amount of any loss, costs, attorneys' fees, and expenses paid by the Company. If requested by the Company, the Insured Claimant must execute documents to transfer these rights and remedies to the Company. The Insured Claimant permits the Company to sue, compromise, or settle in the name of the Insured Claimant and to use the name of the Insured Claimant in any transaction or litigation involving these rights and remedies.

b. If a payment on account of a claim does not fully cover the loss of the Insured Claimant, the Company defers the exercise of its subrogation right until after the Insured Claimant fully recovers its loss.

c. The Company's subrogation right includes the Insured's rights to indemnity, guaranty, warranty, insurance policy, or bond, despite any provision in those instruments that addresses recovery or subrogation rights.

14. POLICY ENTIRE CONTRACT

a. This policy together with all endorsements, if any, issued by the Company is the entire policy and contract between the Insured and the Company. In interpreting any provision of this policy, this policy will be construed as a whole. This policy and any endorsement to this policy may be evidenced by electronic means authorized by law.

b. Any amendment of this policy must be by a written endorsement issued by the Company. To the extent any term or provision of an endorsement is inconsistent with any term or provision of this policy, the term or provision of the endorsement controls. Unless the endorsement expressly states, it does not:

i. modify any prior endorsement,

ii. extend the Date of Policy,

iii. insure against loss or damage exceeding the Amount of Insurance, or

iv. increase the Amount of Insurance.

15. SEVERABILITY

In the event any provision of this policy, in whole or in part, is held invalid or unenforceable under applicable law, this policy will be deemed not to include that provision or the part held to be invalid, but all other provisions will remain in full force and effect.

16. CHOICE OF LAW AND CHOICE OF FORUM

a. *Choice of Law*

The Company has underwritten the risks covered by this policy and determined the premium charged in reliance upon the State law affecting interests in real property and the State law applicable to the interpretation, rights, remedies, or enforcement of policies of title insurance of the State where the Land is located.

The State law of the State where the Land is located, or to the extent it controls, federal law, will determine the validity of claims against the Title and the interpretation and enforcement of the terms of this policy, without regard to conflicts of law principles to determine the applicable law.

b. *Choice of Forum*

Any litigation or other proceeding brought by the Insured against the Company must be filed only in a State or federal court having jurisdiction.

17. NOTICES

Any notice of claim and any other notice or statement in writing required to be given to the Company under this policy must be given to the Company at:
Chicago Title Insurance Company
P.O. Box 45023
Jacksonville, FL 32232-5023
Attn: Claims Department

18. CLASS ACTION

ALL CLAIMS AND DISPUTES ARISING OUT OF OR RELATING TO THIS POLICY, INCLUDING ANY SERVICE OR OTHER MATTER IN CONNECTION WITH ISSUING THIS POLICY, ANY BREACH OF A POLICY PROVISION, OR ANY OTHER CLAIM OR DISPUTE ARISING OUT OF OR RELATING TO THE TRANSACTION GIVING RISE TO THIS POLICY, MUST BE BROUGHT IN AN INDIVIDUAL CAPACITY. NO PARTY MAY SERVE AS PLAINTIFF, CLASS MEMBER, OR PARTICIPANT IN ANY CLASS, REPRESENTATIVE, OR PRIVATE ATTORNEY GENERAL PROCEEDING.

Copyright American Land Title Association. All rights reserved.

The use of this Form (or any derivative thereof) is restricted to ALTA licensees and ALTA members in good standing as of the date of use. All other uses are prohibited. Reprinted under license from the American Land Title Association.

(continued)

19. ARBITRATION

a. All claims and disputes arising out of or relating to this policy, including any service or other matter in connection with issuing this policy, any breach of a policy provision, or any other claim or dispute arising out of or relating to the transaction giving rise to this policy, may be resolved by arbitration. If the Amount of Insurance is Two Million and No/100 Dollars ($2,000,000) or less, any claim or dispute may be submitted to binding arbitration at the election of either the Company or the Insured. If the Amount of Insurance is greater than Two Million and No/100 Dollars ($2,000,000), any claim or dispute may be submitted to binding arbitration only when agreed to by both the Company and the Insured. Arbitration must be conducted pursuant to the Title Insurance Arbitration Rules of the American Land Title Association ("ALTA Rules"). The ALTA Rules are available online at www.alta.org/arbitration. The ALTA Rules incorporate, as appropriate to a particular dispute, the Consumer Arbitration Rules and Commercial Arbitration Rules of the American Arbitration Association ("AAA Rules"). The AAA Rules are available online at www.adr.org.

b. ALL CLAIMS AND DISPUTES MUST BE BROUGHT IN AN INDIVIDUAL CAPACITY. NO PARTY MAY SERVE AS PLAINTIFF, CLASS MEMBER, OR PARTICIPANT IN ANY CLASS, REPRESENTATIVE, OR PRIVATE ATTORNEY GENERAL PROCEEDING IN ANY ARBITRATION GOVERNED BY CONDITION 19. The arbitrator does not have authority to conduct any class action arbitration, private attorney general arbitration, or arbitration involving joint or consolidated claims under any circumstance.

c. *If there is a final judicial determination that a request for particular relief cannot be arbitrated in accordance with this Condition 19, then only that request for particular relief may be brought in court. All other requests for relief remain subject to this Condition 19.*

d. Fees will be allocated in accordance with the applicable AAA Rules. The results of arbitration will be binding upon the parties. The arbitrator may consider, but is not bound by, rulings in prior arbitrations involving different parties. The arbitrator is bound by rulings in prior arbitrations involving the same parties to the extent required by law. The arbitrator must issue a written decision sufficient to explain the findings and conclusions on which the award is based. Judgment upon the award rendered by the arbitrator may be entered in any State or federal court having jurisdiction.

END OF CONDITIONS

Copyright American Land Title Association. All rights reserved.

The use of this Form (or any derivative thereof) is restricted to ALTA licensees and ALTA members in good standing as of the date of use. All other uses are prohibited. Reprinted under license from the American Land Title Association.

ENDORSEMENT - SE 287 POLICY MODIFICATION

Issued By:

CHICAGO TITLE INSURANCE COMPANY

Attached to Policy Number:

24GND629106NB

General Exception number(s) 1-7 of Schedule B of this policy are hereby deleted.

This endorsement is issued as part of the policy. Except as it expressly states, it does not (i) modify any of the terms and provisions of the policy, (ii) modify any prior endorsements, (iii) extend the Date of Policy, or (iv) increase the Amount of Insurance. To the extent a provision of the policy or a previous endorsement is inconsistent with an express provision of this endorsement, this endorsement controls. Otherwise, this endorsement is subject to all of the terms and provisions of the policy and of any prior endorsements.

Chicago Title Insurance Company

Dated: January 24, 2025

Your Property Tax Overview

TOTAL TAXING DISTRICT DEBT ATTRIBUTED TO YOUR PROPERTY

Total Taxing District Debt Attributed to Your Property:	**$28,277**
Property Value:	**$467,090**
Total Debt % Attributed to Your Property Value:	**6.1%**

To see the 20-Year History of Your Property Taxes, click here.

Note: The above amounts are illustrations of how much government debt could be attributed to your property based on its 2023 value.

See Details Here

OVERVIEW - PAYMENTS

Property Index Number (PIN): **04-07-407-001-0000**

BEGIN A NEW SEARCH

Scroll down for more information.

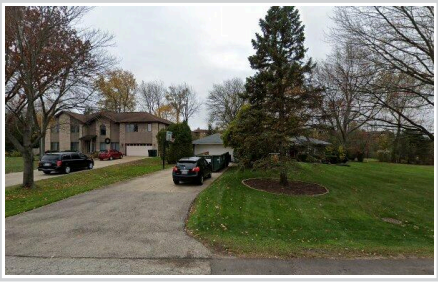

Incorrect Image? Click Here.

Property Location:
3803 OAK AVE
NORTHBROOK, IL 60062-4920

Volume: 131

Mailing Information:
ILYA GILMAN
255 NORTHGATE PKWY
WHEELING, IL 60090-2667

NOTICE: The U.S. Postal Service has returned our bills and notices! Please update the mailing information by clicking on this link.

Are Your Taxes Paid?

Tax Year 2023 (billed in 2024) Total Amount Billed: $9,297.71

1st INSTALLMENT - Tax Year 2023

Original Billed Amount:	$5,431.57
Due Date:	03/01/2024

2nd INSTALLMENT - Tax Year 2023

Original Billed Amount:	$3,866.14
Due Date:	08/01/2024

Tax:	$0.00	**Tax:**	$0.00
Interest:	$0.00	**Interest:**	$0.00
Current Amount Due:	**$0.00**	**Current Amount Due:**	**$0.00**

Total Amount Due: **$0.00**

Expand Payment Details

Tax Year 2024 (billed in 2025) Total Amount Billed: $5,113.74

1st INSTALLMENT - Tax Year 2024

Original Billed Amount:	$5,113.74
Due Date:	03/04/2025
Tax:	$0.00
Interest:	$0.00
Current Amount Due:	**$0.00**

Total Amount Due: **$0.00**

Expand Payment Details

About payments: Payments are recorded the date they are received. They appear on the website about three business days later.

Download Your Tax Bill

Open a PDF of your tax bill that can be printed and used to pay in person or by mail.

Tax Year 2023 Second Installment **Due Thursday, August 1, 2024**

Tax Year 2024 First Installment **Due Tuesday, March 4, 2025**

Stop receiving your tax bill by mail.

Sign up for eBilling to receive future tax bills via email.

Are There Any Overpayments on Your PIN?

Our records do not indicate a refund available on the PIN you have entered.

Have You Received Your Exemptions in These Tax Years?

	2023	2022	2021	2020
Homeowner Exemption:	YES	YES	YES	YES
Senior Citizen Exemption:	YES	YES	YES	YES
Senior Freeze Exemption:	NO	NO	NO	NO
Returning Veteran Exemption:	NO	NO	NO	NO
Disabled Person Exemption:	NO	NO	NO	NO
Disabled Veteran Exemption:	NO	NO	NO	NO

Tax Year 2024 exemptions granted by the Assessor will be reflected on your Second Installment tax bill.

Apply for a missing exemption

20-Year Property Tax Bill History

Tax Year 2004:	$5,887.71
Tax Year 2023:	$9,297.71
Difference:	**+ $3,410.00**
Percent Change:	**+ 57.92%**

See your complete property tax history.

- Read "The Pappas Study" 20-Year Property Tax History
- See the Top 50 Largest Tax Increases since 2000 by Chicago ward and suburb
- Voter Turnout 2011-2020 Chicago and Cook County Suburbs
- Cook County Suburbs - Interactive Map
- Chicago by Ward - Interactive Map

Taxing District Debt Attributed to Your Property

Total Taxing District Debt Attributed to Your Property: **$28,277**

Property Value: **$467,090**

Total Debt % Attributed to Your Property Value: **6.1%**

To see the 20-Year History of Your Property Taxes, click here.

Note: The above amounts are illustrations of how much government debt could be attributed to your property based on its 2023 value.

Select a taxing district name for detailed financial data.

Your Taxing Districts	Total Debts and Liabilities	District Property Value	Property Value	% of Taxing District Debt	Estimated Total Debts and Liabilities to Property

Northwest Mosquito Abatement Wheeling	$833,004	$99,462,645,968	$467,090	0.0004696%	$4
Mission Brook Sanitary Dist (Northbrook)	$73,152	$924,994,502	$467,090	0.0504965%	$37
Metro Water Reclamation Dist of Chicago	$4,681,319,000	$615,525,376,003	$467,090	0.0000759%	$3,552
Northbrook Rural Fire District	$4,552,714	$1,155,946,654	$467,090	0.0404076%	$1,840
Northbrook Park District	$40,344,653	$9,338,615,326	$467,090	0.0050017%	$2,018
Oakton College Dist Skokie Des Plaines	$110,616,164	$92,676,578,865	$467,090	0.0005040%	$558
Glenbrook HS District 225 (Glenview)	$124,383,503	$21,791,642,799	$467,090	0.0021434%	$2,666
Northbrook School District 27	$9,507,286	$3,022,092,276	$467,090	0.0154558%	$1,469
Town of Northfield	$536,477	$22,544,537,297	$467,090	0.0020719%	$11
Cook County Forest Preserve District	$548,552,253	$627,061,316,173	$467,090	0.0000745%	$409
County of Cook	$21,094,656,928	$627,061,316,173	$467,090	0.0000745%	$15,713
				Total Taxing District Debt Attributed to Your Property:	$28,277

To read Treasurer Pappas' Debt Study and use the interactive map, click here.

Highlights of Your Taxing Districts' Debt and Pension

Select a taxing district name for detailed financial data.

Your Taxing Districts	Money Owed by Your Taxing Districts (minus Total Net Pension Liability)	Pension and Healthcare Amounts Promised by Your Taxing Districts	Amount of Pension and Healthcare Shortage	Employees	Retirees	Difference
Northwest Mosquito Abatement Wheeling	$455,316	$8,630,076	$461,013	19	8	11
Mission Brook Sanitary Dist (Northbrook)	$73,152	$0	$0	3	0	3
Metro Water Reclamation Dist of Chicago	$3,126,243,000	$3,151,727,000	$1,449,923,000	1,966	2,454	-488
Northbrook Rural Fire District	$4,552,714	$0	$0	0	0	0
Northbrook Park District	$39,302,961	$39,105,697	($359,939)	185	543	-358
Oakton College Dist Skokie Des Plaines	$110,616,164	$15,817,022	$0	836	0	836
Glenbrook HS District 225 (Glenview)	$109,647,178	$75,088,588	$7,072,470	850	338	512
Northbrook School District 27	$7,347,207	$18,927,838	$2,391,503	210	428	-218
Town of Northfield	$455,737	$7,843,577	$80,740	20	22	-2
Cook County Forest Preserve District	$214,441,242	$617,834,550	$382,643,760	625	536	89
County of Cook	$8,262,580,154	$26,512,006,772	$14,493,276,944	23,760	20,138	3,622

Reports and Data for All Taxing Districts

View the financial reports filed by 547 local Taxing Districts across Cook County pursuant to the Debt Disclosure Ordinance authored by Treasurer Maria Pappas.

- Read the Executive Summary
- Read the Debt Report
- Cook County Debt Map
- Correlation Chart Between Debt and Higher Taxes
- Search your property to find out what portion of local government debt is attributed to your property
- Debt to Property Value by Municipality - Residential and Commercial
- Debt and Disclosure Data
- Browse all financial reports filed by a specific local government

BEGIN A NEW SEARCH

DISCLAIMER: The information on this screen comes from many sources, few of which are in the control of the Cook County Treasurer's Office. Taxpayers are advised to take personal responsibility for their PIN, property location, taxpayer address, and payment amounts posted due or paid, to be sure of their accuracy.

BrowseAloud

PLAT OF TOPOGRAPHY

OF

LOT 14 IN BLOCK 3 IN ARTHUR T. McINTOSH AND CO'S MISSION HILLS ESTATES, BEING A SUBDIVISION OF THE SOUTH 1/2 OF THE SOUTHEAST 1/4 AND THAT PART OF THE SOUTH 1/2 OF THE SOUTHWEST 1/4 WHICH LIES EAST OF SANDERS ROAD IN SECTION 7, TOWNSHIP 42 NORTH, RANGE 12, EAST OF THE THIRD PRINCIPAL MERIDIAN, IN COOK COUNTY, ILLINOIS.

TOTAL LAND AREA: 30,678 SQ.FT.

COMMONLY KNOWN AS: 3803 OAK AVENUE, NORTHBROOK, ILLINOIS 60062

SCALE: 1 INCH = 15 FEET

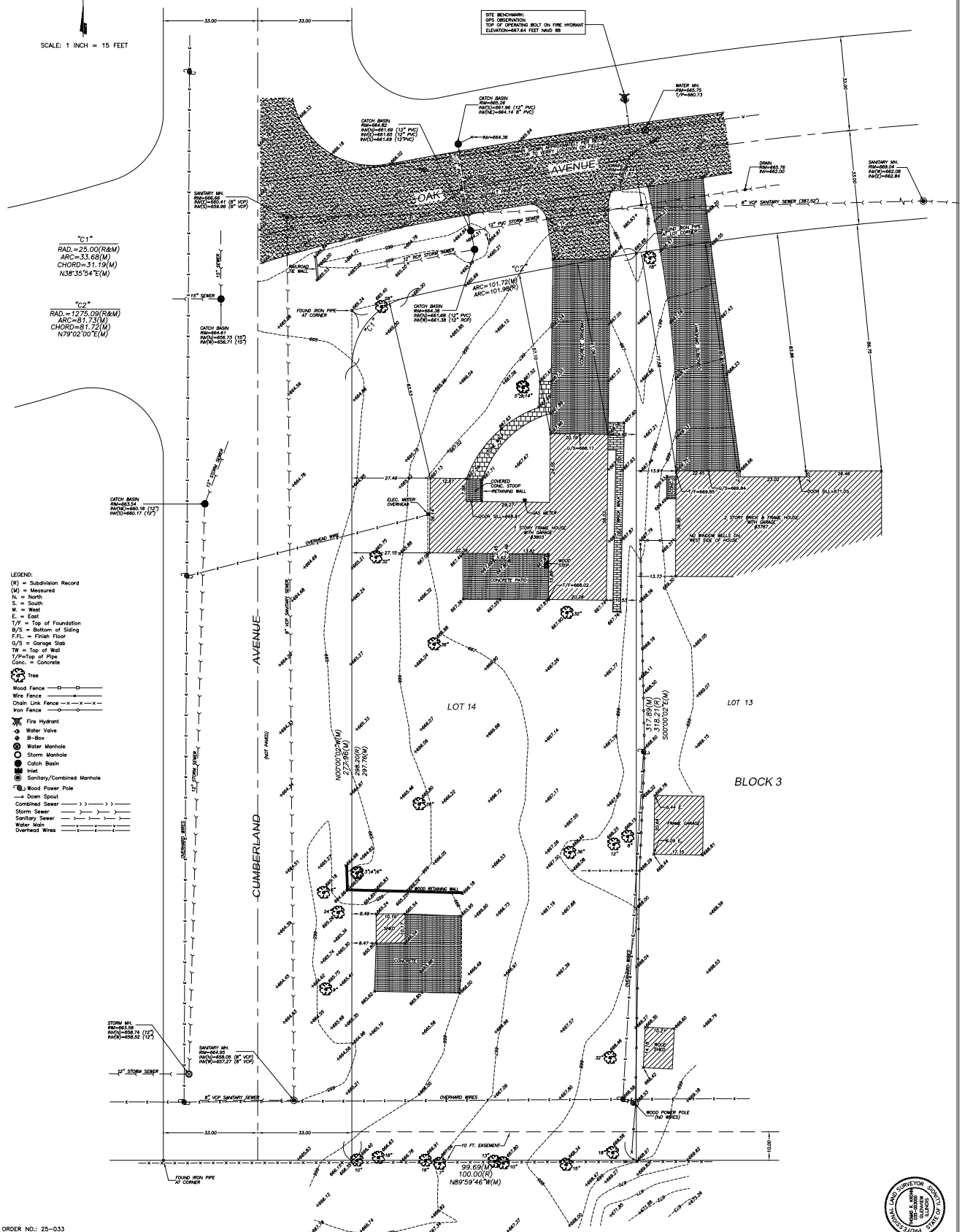

LEGEND:
(R) = Subdivision Record
(M) = Measured
N. = North
S. = South
W. = West
E. = East
T/F = Top of Foundation
B/S = Bottom of Siding
F.F.L. = Finish Floor
G/S = Garage Slab
TW = Top of Wall
T/P=Top of Pipe
Conc. = Concrete
Tree
Wood Fence
Wire Fence
Chain Link Fence
Iron Fence
Fire Hydrant
Water Valve
B-Box
Water Manhole
Storm Manhole
Catch Basin
Inlet
Sanitary/Combined Manhole
Wood Power Pole
Down Spout
Combined Sewer
Storm Sewer
Sanitary Sewer
Water Main
Overhead Wires

ORDER NO.: 25-033
ORDERED BY: LUKAVEN DEVELOPMENT LLC

PREPARED BY:
GEODETIC SURVEY, LTD.
PROFESSIONAL DESIGN FIRM NO. 184-004394
CONSTRUCTION AND LAND SURVEYORS
200 WAUKEGAN ROAD, GLENVIEW, IL 60025
TEL. (847) 904-7690 FAX (847) 904-7691
info@gsurvey.net www.gslandsurveying.com

NOTE: Location of underground utilities and sewer size where not substantiated by physical evidence are taken from records normally considered reliable. No responsibility for their accuracy is assumed by the surveyor.

Locations of existing utility services are based on visual observations. Contractor must confirm location and condition of all utility services to remain.

FOR LOCATION OF BURIED CABLE, CALL J.U.L.I.E. ☎1-800-892-0123 BEFORE DIGGING

GENERAL NOTES:
-FOR EASEMENTS, BUILDING LINES AND OTHER RESTRICTIONS NOT SHOWN ON THE PLAT OF SURVEY REFER TO YOUR ABSTRACT, DEED, TITLE POLICY, CONTRACT AND LOCAL BUILDING LINE/SETBACK REGULATIONS.
-COMPARE ALL POINTS BEFORE BUILDING AND AT ONCE REPORT ANY DISCREPANCIES, WHICH YOU MAY HAVE FOUND, TO THIS OFFICE, BEFORE DAMAGE IS DONE.
-DIMENSIONS ARE SHOWN IN FEET AND DECIMALS AND ARE NOT TO BE ASSUMED FROM SCALING.
-BEARINGS ARE REFERRED TO AN ASSUMED MERIDIAN AND ARE USED TO DENOTE ANGLES ONLY.
-THE LEGAL DESCRIPTION NOTED ON THIS PLAT WAS PROVIDED BY THE CLIENT AND FOR ACCURACY SHOULD BE COMPARED WITH DEED AND/OR TITLE INSURANCE POLICY.

STATE OF ILLINOIS SS
COUNTY OF COOK

I HEREBY CERTIFY THAT THIS PLAT WAS PREPARED UNDER MY DIRECT SUPERVISION AND THAT I AM A DULY LICENSED LAND SURVEYOR UNDER THE LAWS OF THE STATE OF ILLINOIS.

FIELD WORK COMPLETED: MARCH 21, 2025

DATED THIS 27th DAY OF MARCH, 2025.

BY: _____
PROFESSIONAL ILLINOIS LAND SURVEYOR NO.3000
LICENSE EXPIRES 11/30/2026

PROFESSIONAL LAND SURVEYOR · QUALITY · 3000 · EDWARD R. ARENS · STATE OF ILLINOIS

NEW RESIDENCE FOR:

PRIVATE OWNER

3803 OAK AVE
NORTHBROOK, IL

GENERAL NOTES

1 INCLUDED AS PART OF THESE DOCUMENTS IS THE "GENERAL CONDITIONS FOR CONSTRUCTION", AIA DOCUMENT A-201, ARTICLE 1 THROUGH 14 INCLUSIVE.

2 THESE DRAWINGS INDICATE THE GENERAL SCOPE OF THE PROJECT IN TERMS OF THE ARCHITECTURAL DESIGN CONCEPT, DIMENSIONS, MAJOR ELEMENTS AND MATERIALS. THESE DRAWINGS DO NOT NECESSARILY INDICATE OR DESCRIBE ALL WORK REQUIRED FOR THE FULL COMPLETION OF THE PROJECT.

3 THE GENERAL CONTRACTOR AND HIS SUB-CONTRACTORS SHALL FURNISH ALL OF THOSE ITEMS AND LABOR REQUIRED FOR THE FULL COMPLETION OF THIS PROJECT IN A FIRST CLASS WORKMANSHIP LIKE MANNER.

4 THE CONTRACTOR SHALL BE HELD RESPONSIBLE FOR FIELD VERIFICATION OF ALL DIMENSIONS AND CONDITIONS BEFORE EXECUTION OF ANY WORK AND SHALL REPORT ANY DISCREPANCIES TO THE ARCHITECT IN WRITING.

5 THE CONTRACTOR SHALL BE HELD RESPONSIBLE FOR THE ADHERENCE TO COMPLY WITH ALL APPLICABLE CITY, STATE, AND NATIONAL CODES AND ORDINANCES.

6 THE CONTRACTOR SHALL VERIFY ALL PARTITION LAYOUTS WITH THE ARCHITECT BEFORE PROCEEDING WITH ANY FRAMING.

7 THE CONTRACTOR SHALL BE RESPONSIBLE FOR THE COORDINATION OF ALL INCOMING UTILITIES.

8 WRITTEN DIMENSIONS HOLD PREFERENCE OVER SCALED DIMENSIONS. DO NOT SCALE DRAWINGS.

9 THE GENERAL CONTRACTOR AND SUB-CONTRACTORS SHALL:
A. COMPLY WITH ALL LOCAL, STATE AND NATIONAL CODES AND ORDINANCES.
B. PERFORM ALL WORK IN A FIRST CLASS WORKMANSHIP LIKE MANNER AND IN NO WAY DAMAGE OR WEAKEN THE STRUCTURAL ELEMENTS OF THE BUILDING.
C. REMAIN RESPONSIBLE FOR COMPLIANCE WITH THE PROVISIONS OF THE OCCUPATIONAL SAFETY AND HEALTH ACT, (OSHA) LATEST ADDITION.
D. ALL WORK SHALL BE GUARANTEED FOR ONE YEAR AFTER SUBMITTAL OF COMPLETION OF WORK.
E. MAINTAIN THROUGHOUT THE CONSTRUCTION PERIOD, A CERTIFICATE OF INSURANCE FOR ALL LIABILITIES, WITH A HOLD HARMLESS CLAUSE, PROTECTING THE OWNER AND ARCHITECT.

10 THE GENERAL CONTRACTOR'S SUB-CONTRACTORS SHALL COMPLETELY HOOK-UP AND CONNECT ALL EQUIPMENT AND FURNISH ALL NECESSARY APPENDAGES.

11 ALL WINDOW GLASS, MIRRORS, FLOORS AND WALL TILE SHALL BE CLEANED AND WASHED UPON COMPLETION OF THE PROJECT BY THE GENERAL CONTRACTOR.

12 THE PREMISES SHALL BE KEPT IN A BROOM SWEPT FINISH CONDITION DURING ALL PHASES OF CONSTRUCTION. (ALL CONTRACTORS AND SUB-CONTRACTORS SHALL BE RESPONSIBLE FOR CLEANING UP AND DISPOSING OF THEIR LITTER AND LEFT OVER MATERIALS ON A REGULAR BASIS, AND LEAVE THE PROJECT IN A BROOM SWEPT FINISH CONDITION UPON COMPLETION OF THEIR PORTION OF THE PROJECT).

13 THE ENTIRE INSTALLATION SHALL BE PERFORMED IN A FIRST CLASS WORKMANSHIP LIKE MANNER. THE COMPLETED SYSTEMS SHALL BE FULLY OPERATIONAL. ACCEPTANCE BY THE OWNER SHALL BE A CONDITION OF THE CONTRACT.

GENERAL NOTES

14 ALL WORK SHALL BE COORDINATED WITH ALL OTHER TRADES IN ORDER TO AVOID INTERFERENCE, PRESERVE MAXIMUM HEAD ROOM, AND AVOID OMISSIONS.

15 ALL WORK PERFORMED MUST COMPLY WITH THE COOK COUNTY MUNICIPAL CODE.

16 THE GENERAL CONTRACTOR SHALL PROVIDE TEMPORARY FENCING AND BARRICADES AROUND THE ENTIRE SITE TO BE PROTECTED AND AT ANY INTERIOR FLOOR OPENINGS THAT MIGHT CAUSE A HAZARD TO ALL.

17 ALL CONTRACTORS AND THEIR REPRESENTATIVES WORKING ON THIS PROJECT SHALL AT ALL TIMES PRIOR AND DURING THE COURSE OF THEIR ACTIVITY BE RESPONSIBLE FOR THE SAFETY OF THEIR EMPLOYEES, AS WELL AS OTHERS AND IN THE CARE OF THE PROPERTY. EACH AS REPRESENTATIVES OF THEIR EMPLOYEES SHALL ASCERTAIN THAT THE CONDITIONS UNDER WHICH THEY WILL BE REQUIRED TO ACCOMPLISH THEIR WORK ARE SAFE WITHIN GOOD SAFETY PRACTICES AND MEET ALL CONCERNED REGULATIONS OF THE OCCUPATIONAL SAFETY AND HEALTH ACT OR OTHER GOVERNING REGULATIONS. THE BEGINNING OF WORK BY A CONTRACTOR SHALL INDICATE SATISFACTION CONCERNING SAFETY AND FULL RESPONSIBILITY FOR ACCIDENTS OR DAMAGE. IF UNSATISFIED, THE CONTRACTOR SHALL INDICATE WHAT SO EVER ACTIONS OR DEVICES NECESSARY TO RENDER SAFETY CONDITIONS FOR LIFE AND PROPERTY AS ARE RELATED TO THEIR ACTIVITY. IF THE WORK OF OTHER PARTIES OUTSIDE OF THEIR ORGANIZATION IS UPON INSPECTION FOUND AT ANY TIME TO BE UNSAFE, THEY SHALL STOP WORK IMMEDIATELY AND NOTIFY THE GENERAL CONTRACTOR, ARCHITECT AND OWNER. THE BEGINNING OF WORK SHALL INDICATE SATISFACTION. ACCEPTANCE OF A CONTRACT SHALL INDICATE ACCEPTANCE OF THESE REQUIREMENTS.

18 THE ARCHITECT ASSUMES NO RESPONSIBILITY FOR CONSTRUCTION OTHER THAN SHOWN ON THESE DRAWINGS.

19 INTERIOR FINISHES SHALL NOT EXCEED CLASS 1, 0-25 FLAME SPREAD, 200 SMOKE.

20 THIS SET OF PLANS IS PROTECTED UNDER UNITED STATES GOVERNMENT COPYRIGHT LAWS AND MAY NOT BE REPRODUCED, REPRINTED OR COPIED IN ANY MANNER, EXCEPT BY APPROVAL OF ARCHITECT IN WRITING. ANY PERSON OR FIRM KNOWINGLY REPRODUCING, REPRINTING OR PHOTOCOPYING ANY OF THIS WORK SHALL BE SUBJECT TO LAWSUITS AND SUCH PENALTIES AS THE LAW ALLOWS.

21 GENERAL CONTRACTOR SHALL OBTAIN SOILS REPORT BY GEOTECHNICAL ENGINEER LISTING SOIL BEARING CAPACITY. REPORT SHALL BE SUBMITTED TO ARCHITECT AND AUTHORITY HAVING JURISDICTION PRIOR TO CONCRETE PLACEMENT. SOILS REPORT SHALL BE AVAILABLE ON-SITE DURING FOOTING INSPECTION.

22 GENERAL CONTRACTOR SHALL OBTAIN SPOT FOUNDATION SURVEY BY LICENSED SURVEYOR AND SHALL SUBMIT SURVEY TO AUTHORITY HAVING JURISDICTION PRIOR TO ANY FRAMING.

23 APPROVED BUILDING PLANS SHALL BE AVAILABLE ON-SITE FOR ALL INSPECTIONS.

24 ROOF TRUSSES SHALL BE A DEFERRED SUBMITTAL. ARCHITECT OF RECORD TO REVIEW AND APPROVE ROOF TRUSS SHOP DRAWINGS PRIOR TO INSTALLATION. APPROVED SHOP DRAWINGS SHALL BE PROVIDED TO AHJ PRIOR TO INSTALLATION.

ENERGY CODE NOTES

1 ENERGY CODE COMPLIANCE DESIGN BY PRESCRIPTIVE
CLIMATE ZONE: 5
MAX. GLAZING U-FACTOR: 0.30
ACTUAL U-FACTOR: 0.30
MAX. SKYLIGHT U-FACTOR: 0.55
ACTUAL SKYLIGHT U-FACTOR: 0.55
SHGC: 0.40
MIN. CEILING R-VALUE: 49
ACTUAL CEILING R-VALUE: 49 (BATT)
MIN. FRAME WALL R-VALUE: 30 OR 20 + 5
ACTUAL WALL R-VALUE: 30 (SPRAY FOAM)
MIN. FLOOR R-VALUE: 30
ACTUAL FLOOR R-VALUE: N/A
MIN. BASEMENT R-VALUE: 15/19
ACTUAL BASEMENT R-VALUE: 20

GC TO PROVIDE PERMANENT CERTIFICATE TO BE POSTED ADJACENT TO ELECTRICAL PANEL INDICATING INSULATION AND ENERGY VALUES FOR BUILDING INSULATION, FENESTRATION AND DUCT SYSTEMS.

SPRAY FOAM BOX SILLS AND SILL PLATES, AND ADD R-15 HIGH DENSITY FRICTION FIT BATT INSULATION.

2 ALL PENETRATIONS THROUGH THERMAL ENVELOPE SHALL BE ADEQUATELY SEALED BY CAULK, GASKET, WEATHERSTRIPPING OR OTHER BARRIER MEANS PER 2021 IECC REQUIREMENTS.

ALL WINDOWS AND EXTERIOR DOOR JAMBS ARE TO BE SEALED WITH LOW-EXPANSION FOAM.

ALL BOTTOM PLATES ON EXTERIOR WALLS SHALL BE GLUED TO SUB-FLOOR.

3 ALL FIREPLACES SHALL HAVE GASKETED DOORS & OUTSIDE COMBUSTION AIR.

ENERGY CODE NOTES

4 ALL RECESSED LIGHTING IN THERMAL ENVELOPE SHALL BE SEALED TO PREVENT AIR LEAKAGE. ALL RECESSED DOWNLIGHTING TO BE IC-RATED.

5 PROVIDE PROGRAMMABLE THERMOSTATS FOR EACH ZONE WITH SETBACK AND MANUAL OVERRIDE.

6 ALL DUCTWORK SHALL BE ADEQUATELY SEALED. ALL SUPPLY DUCTWORK IN UNCONDITIONED ATTIC TO HAVE R-8 INSULATION. ALLOTHER DUCTWORK TO HAVE R-6 INSULATION. HVAC CONTRACTOR SHALL PROVIDE EITHER POST-CONSTRUCTION OR ROUGH-IN TEST OF TOTAL AIR LEAKAGE FOR DUCT SYSTEMS.

7 ALL MECHANICAL SYSTEM PIPING CAPABLE OF CARRYING FLUIDS ABOVE 105 DEG F OR BELOW 55 DEG F SHALL BE INSULATED TO A MINIMUM OF R-3. ALL HOT WATER LINES TO HAVE R-3 PIPE INSULATION & MANUAL SWITCH FOR RECIRC. PUMP.

8 ALL ACCESS HATCHES/DOORS TO UNCONDITIONED SPACE SHALL BE INSULATED & WEATHERSTRIPPED.

9 ALL LIGHTING TO HAVE HIGH-EFFICACY BULBS.

10 FURNACE: +95% AFUE
WATER HEATER: +95% AFUE
A/C: 16+ SEER

11 WINDOWS, SKYLIGHTS AND SLIDING GLASS DOORS SHALL HAVE AN AIR INFILTRATION RATE NO MORE THAN 0.3 CFM PER SF, AND SWINGING DOORS NO MORE THAN 0.5 CFM PER SF.

PROJECT DATA

PROJECT LOCATION: 3803 OAK AVE, NORTHBROOK, IL

ZONING DISTRICT: R-4
LOT AREA: 30,825 SF
PIN: ???

MAX LOT COVERAGE: 35% (10,788 SF)

PROPOSED LOT COVERAGE
BLDG FOOTPRINT: 3,647 SF
FRONT WALK: 206 SF
REAR PORCH: 320 SF
REAR PATIO: 877 SF
DRIVEWAY: 3,237 SF

TOTAL IMP. COVERAGE: 8,287 SF

MAX FLOOR AREA RATIO: 0.25 (7,706 SF)

ACTUAL BUILDING SIZE:
1ST FLOOR: 2,823 SF (INCLUDES POOL)
2ND FLOOR: 2,258 SF (INCLUDES DBL HT SPACES)

TOTAL BUILDING SIZE: 5,081 SF

MAX BUILDING HEIGHT: 35 FEET

PROPOSED HEIGHT: 35 FEET

APPLICABLE BUILDING CODES:
2021 INTERNATIONAL RESIDENTIAL CODE
2014 COOK COUNTY ELECTRICAL CODE
2014 ILLINOIS STATE PLUMBING CODE
2021 INTERNATIONAL ENERGY CONS. CODE
2021 INTERNATIONAL MECHANICAL CODE
2021 INTERNATIONAL FUEL GAS CODE
ALL AS AMENDED
COOK COUNTY MUNICIPAL CODE
COOK COUNTY ZONING ORDINANCE

SCOPE OF WORK

SCOPE OF WORK LIMITED TO THE FOLLOWING:
- NEW SINGLE FAMILY RESIDENCE WITH ATTACHED GARAGE AND ATTACHED ENCLOSED POOL, REAR TERRACE AND DRIVEWAY



THOMAS ARCHITECTS
2800 S RIVER RD, #305
DES PLAINES, IL 60018
O: 847.235.6815
THOMAS @ THOMASARCH.COM

SHEET INDEX

A-0.0	TITLE SHEET
A-0.1	SITE PLAN
A-0.2	WALL / FLOOR / ROOF ASSEMBLY DETAILS
A-2.1	BASEMENT PLAN
A-2.2	FIRST FLOOR PLAN
A-2.2A	FIRST FLOOR PLAN - POOL
A-2.4	SECOND FLOOR PLAN
A-2.5	ROOF PLAN - SCHEDULES
A-2.6	REFLECTED CEILING PLANS
A-3.0	BUILDING ELEVATIONS
A-3.1	BUILDING ELEVATIONS
A-3.2	ENLARGED BUILDING ELEVATIONS / DETAILS
A-4.0	BUILDING SECTIONS
A-4.1	BUILDING SECTIONS
A-5.0	WALL SECTIONS
A-5.1	WALL SECTIONS
A-5.3	SECTIONS DETAILS
A-9.0	FOUNDATION PLAN
A-9.1	FIRST FLOOR FRAMING PLAN
A-9.2	SECOND FLOOR FRAMING PLAN
A-9.3	ROOF FRAMING PLAN
A-9.4	LATERAL BRACE DIAGRAMS
E-1.0	ELECTRICAL PLANS
E-1.1	ELECTRICAL PLANS
E-1.2	ELECTRICAL PLANS
M-1.0	MECHANICAL PLANS
M-1.1	MECHANICAL PLANS
M-1.2	MECHANICAL PLANS
M-1.3	MECHANICAL NOTES / SCHEDULES / DIAGRAMS
M-2.1	MECHANICAL PLAN - POOL
M-2.2	MECHANICAL SCHEDULES / DETAILS - POOL
P-1.0	PLUMBING NOTES - DIAGRAMS

CERTIFICATION

THIS IS TO CERTIFY THAT THESE DRAWINGS WERE PREPARED UNDER MY DIRECT SUPERVISION AND ARE CORRECT TO THE BEST OF MY KNOWLEDGE IN ACCORDANCE WITH THE BUILDING CODES AND ORDINANCES OF COOK COUNTY

DATE 04/28/2025

IL LIC. NO. 001-019213
EXP. DATE: 11/30/2026

THOMAS BUDZIK 001-019213

No.	Description	Date
1	ISSUE FOR PERMIT	04.28.2025
2	PERMIT REVISIONS	06.17.2025

Project Name and Address

PRIVATE OWNER
NEW RESIDENCE

3803 OAK AVE
NORTHBROOK, IL

Project No. 24-095

Description TITLE SHEET

Sheet A-0.0

C:\Users\Thomas\Documents\24095_3803 Oak_tharch.rvt

ABBREVIATION LEGEND

AC	ACOUSTICAL
ACC	ACCESSORY
AL	ALUMINUM
ALT	ALTERNATE
ANN	ANNUNCIATOR
ANOD	ANODIZED
APPL	APPLIANCE
ARCH	ARCHITECTURAL
AUTO	AUTOMATIC
AVG	AVERAGE
BD	BOARD
BLDG	BUILDING
BLKG	BLOCKING
CAB	CABINET
CLG	CEILING
CMU	CONCRETE MASONRY UNIT
CONC	CONCRETE
CONT	CONTINUOUS
CPT	CARPET
DBL	DOUBLE
DEPT	DEPARTMENT
DET	DETAIL
DIA	DIAMETER
DIV	DIVISION
DN	DOWN
DR	DOOR
ELEC	ELECTRICAL
ENTR	ENTRANCE
EQ	EQUAL
EQUIP	EQUIPMENT
EX	EXISTING
EXT	EXTERIOR
FAB	FABRICATION
FD	FLOOD DRAIN
FE	FIRE EXTINGUISHER
FEC	FIRE EXTINGUISHER CABINET
FIN	FINISH
FL	FLOOR (ING)
FR	FIRE RATED
FURN	FURNITURE
GA	GUAGE
GL	GROUND LEVEL
GR	GRADE(ING)
GYP	GYPSUM
HD	HEAD
HDWD	HARDWOOD
HDWR	HARDWARE
HM	HOLLOW METAL
HOR	HORIZONTAL
INFLTR	INFILTRATION
INFO	INFORMATION
INSUL	INSULATION
INT	INTERIOR
JAN	JANITOR
KIT	KITCHEN
LAV	LAVATORY
LB	POUND
LT	LIGHT

ABBREVIATION LEGEND

LVR	LOUVER
MAX	MAXIMUM
MECH	MECHANICAL
MEZZ	MEZZANINE
MFD	MANUFACTURED
MFR	MANFACTURER
MIN	MINIMUM
MISC	MISCELLANEOUS
MLWK	MILLWORK
MT	MOUNT
MTL	METAL
NIC	NOT IN CONTRACT
NTS	NOT TO SCALE
OPNG	OPENING
OVFL	OVERFLOW
OVHD	OVERHEAD
PLAM	PLASTIC LAMINATE
PLAS	PLASTER
PLSTC	PLASTIC
PLYWD	PLYWOOD
PNL	PANEL
PR	POWDER ROOM
PREFAB	PREFABRICATED
PREFIN	PREFINISHED
PROT	PROTECTION
RDR	READER
REF	REFERENCE
REINF	REINFORCED
REQD	REQUIRED
RES	RESISTANT
RESIL	RESILIANT
RF	REFRIGERATOR
RM	ROOM
RO	ROUGH OPENING
SEC	SECURITY
SF	SQUARE FEET
SGL	SINGLE
SIM	SIMILAR
SST	STAINLESS STEEL
STD	STANDARD
STL	STEEL
SURF	SURFACE
SUSP	SUSPENDED
SYS	SYSTEM(S)
THK	THICK
TLT	TOILET
TRANS	TRANSPARENT
TRTD	TREATED
TSS	TAPE, SAND AND SEAL
TYP	TYPICAL
UNO	UNLESS NOTED OTHERWISE
UTIL	UTILITY
VEH	VEHICLE
VERT	VERTICAL
VIF	VERIFY IN FIELD
W/	WITH
W/O	WITHOUT
WC	WATER CLOSET
WDW	WINDOW
WRB	WEATHER RESISTANT BARRIER

ANNOTATION LEGEND

- DETAIL CALLOUT
- INTERIOR ELEVATION CALLOUT
- EXTERIOR ELEVATION CALLOUT
- SECTION CALLOUT
- DOOR TAG
- WINDOW TAG
- WALL TAG
- KEYNOTE
- FIXTURE / EQUIPMENT TAG

DIMENSIONING NOTES

1. ALL FLOOR PLANS ARE DIMENSIONED TO EXTERIOR FACE OF STUD OR EXTERIOR FACE OF BRICK VENEER AT EXTERIOR WALLS, U.N.O.
2. ALL FLOOR PLANS ARE DIMENSIONED TO THE FACE OF STUD AT ALL INTERIOR WALLS, U.N.O.
3. ALL ROOF OVERHANG DIMENSIONS ARE TO THE EXTERIOR FACE OF THE EXTERIOR WALL STUD, U.N.O.

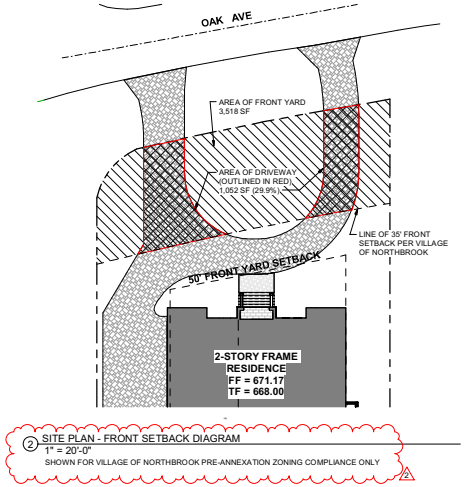

2 SITE PLAN - FRONT SETBACK DIAGRAM
1" = 20'-0"
SHOWN FOR VILLAGE OF NORTHBROOK PRE-ANNEXATION ZONING COMPLIANCE ONLY

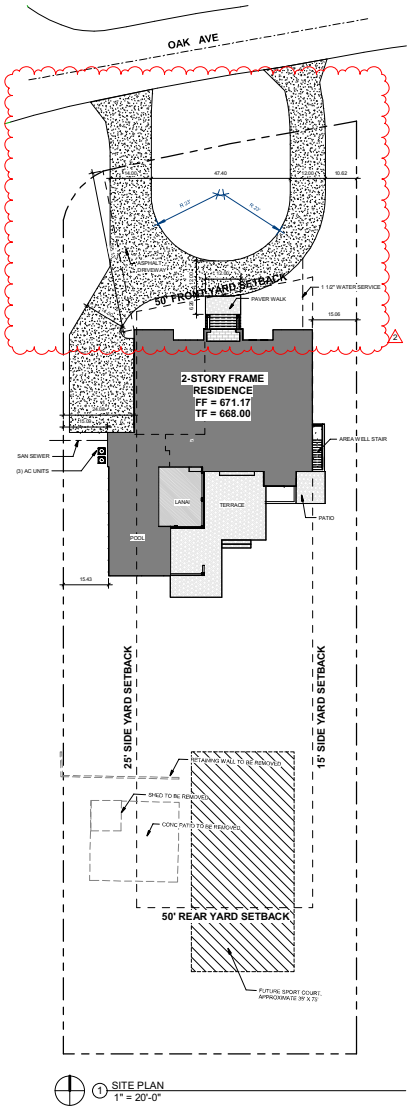

1 SITE PLAN
1" = 20'-0"

SITE NOTES

1. SEE CIVIL ENGINEERING DRAWINGS FOR ALL SANITARY, STORM, WATER & OTHER UTILITIES.
2. GENERAL CONTRACTOR TO KEEP CONSTRUCTION SITE FREE OF EXCESSIVE CONSTRUCTION DEBRIS AT ALL TIMES.
3. GENERAL CONTRACTOR TO PROVIDE CONSTRUCTION & SILT FENCING PER NORTHBROOK REQUIREMENTS.
   SEE CIVIL ENGINEERING DRAWINGS.
4. GENERAL CONTRACTOR TO PROVIDE ON-SITE PORT-O-POTTY.
5. SITE INSPECTION REQUIRED PRIOR TO COMMENCEMENT OF ANY CONSTRUCTION OR DEMOLITION WORK.
6. ALL DOWNSPOUTS SHALL SPLASH AT GRADE, BE DIRECTED TOWARD THE FRONT OR REAR OF THE HOUSE, NOT DISCHARGE MORE THAN 10' FROM THE PROPERTY LINE AND NOT DIRECTLY CONNECT TO THE STORM SEWER.

THOMAS ARCHITECTS
2800 S RIVER RD, #305
DES PLAINES, IL 60018
O: 847.235.6815
THOMAS @ THOMASARCH.COM

THOMAS BUDZIK 001-010213

No.	Description	Date
1	ISSUE FOR PERMIT	04.28.2025
2	PERMIT REVISIONS	06.17.2025

Project Name and Address

PRIVATE OWNER
NEW RESIDENCE

3803 OAK AVE
NORTHBROOK, IL

Project No. 24-095

Description SITE PLAN

Sheet A-0.1

C:\Users\Thomas\Documents\24095_3803 Oak_tharch.rvt



2 REAR (S) ELEVATION
1/4" = 1'-0"



1 FRONT (N) ELEVATION
1/4" = 1'-0"

THOMAS ARCHITECTS
2800 S RIVER RD, #305
DES PLAINES, IL 60018
O: 847.235.6815
THOMAS @ THOMASARCH.COM

KEYNOTES - ELEVATION

1 BRICK VENEER
2 STONE VENEER
3 EIFS - SMOOTH FINISH
4 GUTTER & DOWNSPOUT - ALUM
5 NOM. 6" FASCIA BD
6 COVE MOLDING AND FRIEZE
7 ARCH ASPHALT SHINGLE - 30 YR

No.	Description	Date
1	ISSUE FOR PERMIT	04.28.2025
2	PERMIT REVISIONS	06.17.2025

Project Name and Address

PRIVATE OWNER
NEW RESIDENCE

3803 OAK AVE
NORTHBROOK, IL

Project No. 24-095

Description BUILDING ELEVATIONS

Sheet A-3.0

C:\Users\Thomas\Documents\24095 3803 Oak_tharch.rvt

450

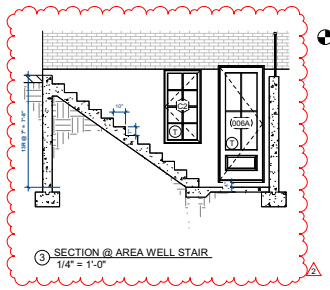

3 SECTION @ AREA WELL STAIR
1/4" = 1'-0"

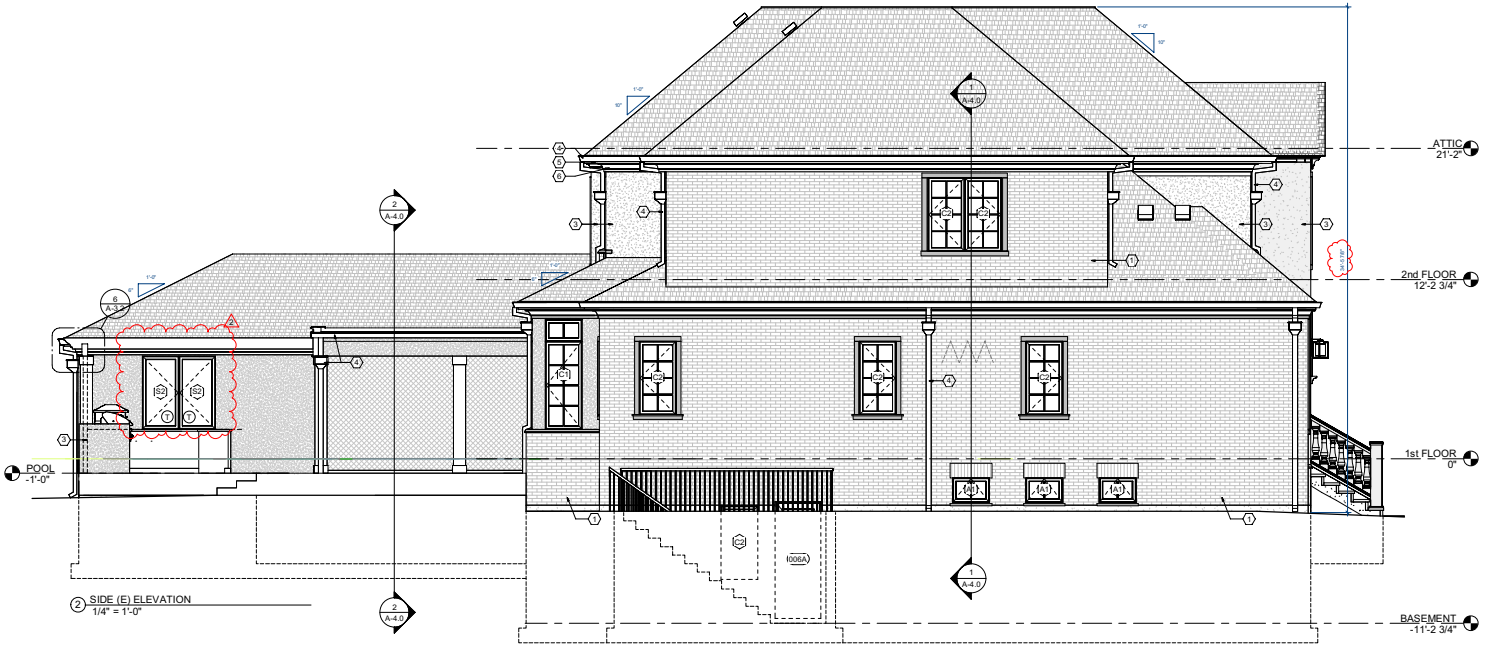

2 SIDE (E) ELEVATION
1/4" = 1'-0"



1 SIDE (W) ELEVATION
1/4" = 1'-0"

KEYNOTES - ELEVATION

1	BRICK VENEER
2	STONE VENEER
3	EIFS - SMOOTH FINISH
4	GUTTER & DOWNSPOUT - ALUM
5	NOM. 6" FASCIA BD
6	COVE MOLDING AND FRIEZE
7	ARCH ASPHALT SHINGLE - 30 YR

THOMAS ARCHITECTS
2800 S RIVER RD, #305
DES PLAINES, IL 60018
O: 847.235.6815
THOMAS @ THOMASARCH.COM

THOMAS BUDZIK 001-010213

No.	Description	Date
1	ISSUE FOR PERMIT	04.28.2025
2	PERMIT REVISIONS	06.17.2025

Project Name and Address

PRIVATE OWNER
NEW RESIDENCE

3803 OAK AVE
NORTHBROOK, IL

Project No. 24-095

Description BUILDING ELEVATIONS

Sheet A-3.1

C:\Users\Thomas\Documents\24095 3803 Oak_tharch.rvt



3803 OAK AVENUE

GISConsortium | 3803 Oak Avenue

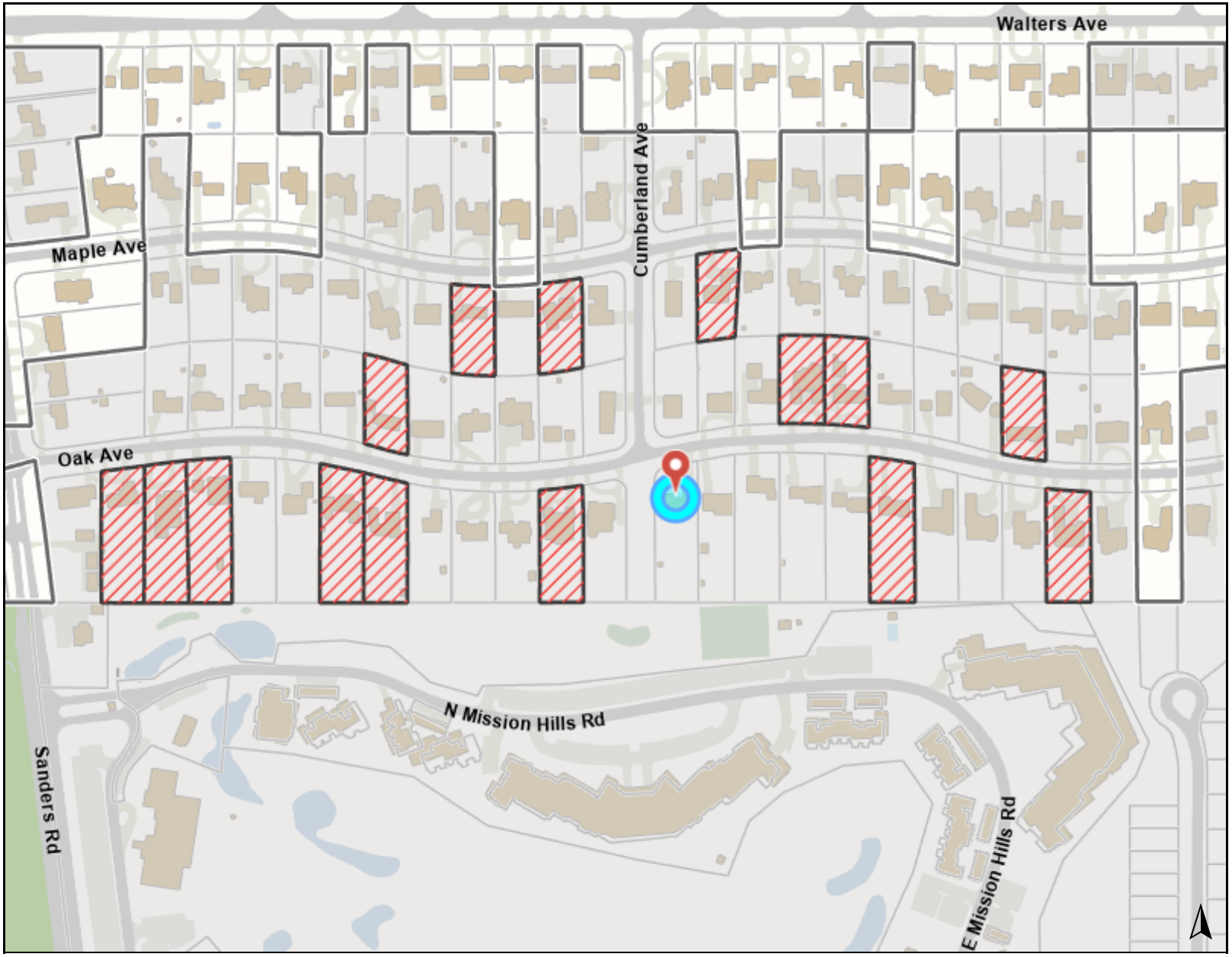

Legend

myGIS Layers

Annexation

0 500 1000 ft

Print Date: 7/24/2025

Notes

Disclaimer: The GIS Consortium and MGP Inc. are not liable for any use, misuse, modification or disclosure of any map provided under applicable law. This map is for general information purposes only. Although the information is believed to be generally accurate, errors may exist and the user should independently confirm for accuracy. The map does not constitute a regulatory determination and is not a base for engineering design. A Registered Land Surveyor should be consulted to determine precise location boundaries on the ground.

GISConsortium | 3803 Oak Avenue

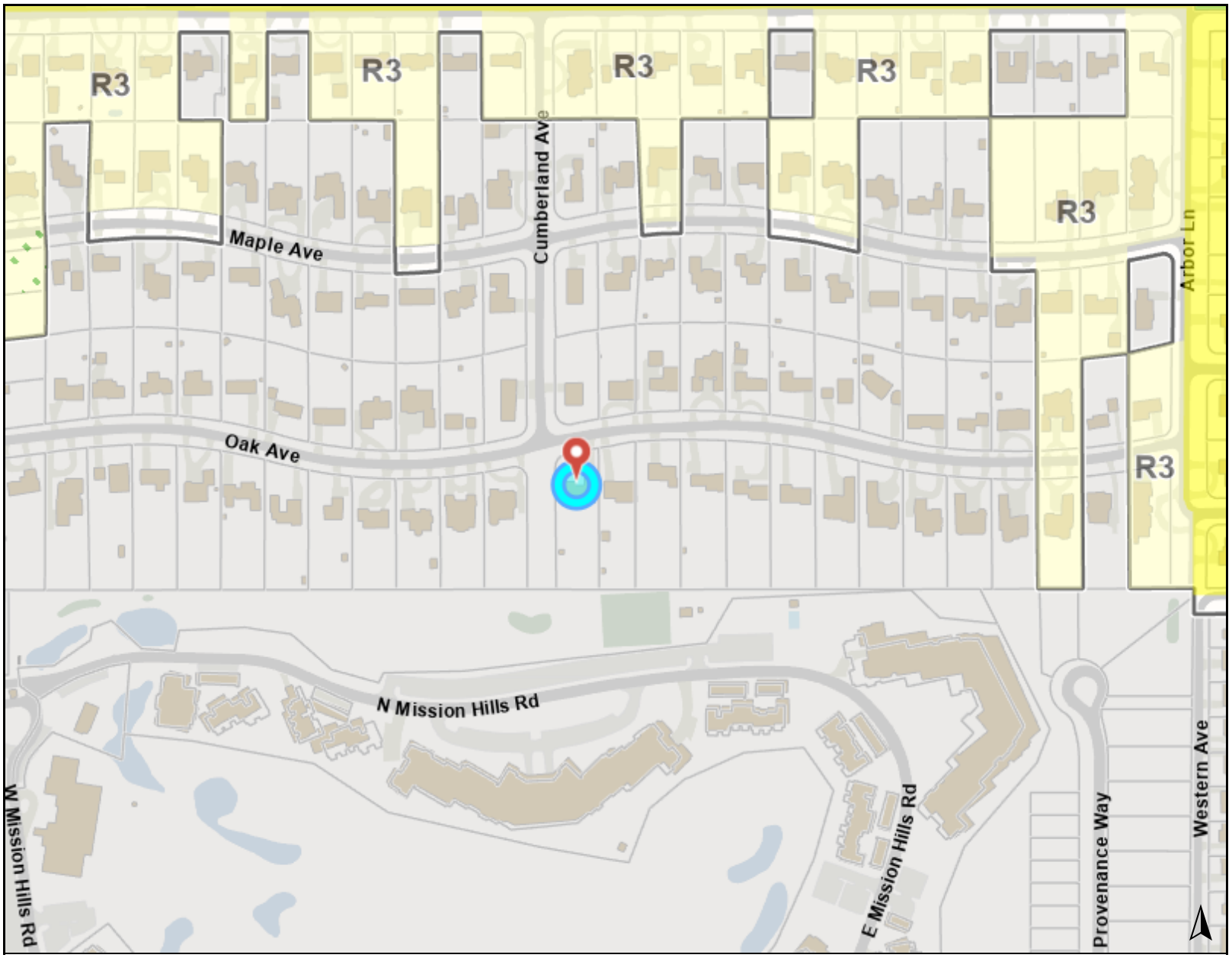

Legend

Zoning and Development

Zoning

- R1: Single Family Residential Districts
- R3: Single Family Residential Districts
- R4: Single Family Residential Districts
- OS: Open Space District

0 500 1000 ft

Print Date: 7/24/2025

Notes

Disclaimer: The GIS Consortium and MGP Inc. are not liable for any use, misuse, modification or disclosure of any map provided under applicable law. This map is for general information purposes only. Although the information is believed to be generally accurate, errors may exist and the user should independently confirm for accuracy. The map does not constitute a regulatory determination and is not a base for engineering design. A Registered Land Surveyor should be consulted to determine precise location boundaries on the ground.

GISConsortium | 3803 Oak Avenue

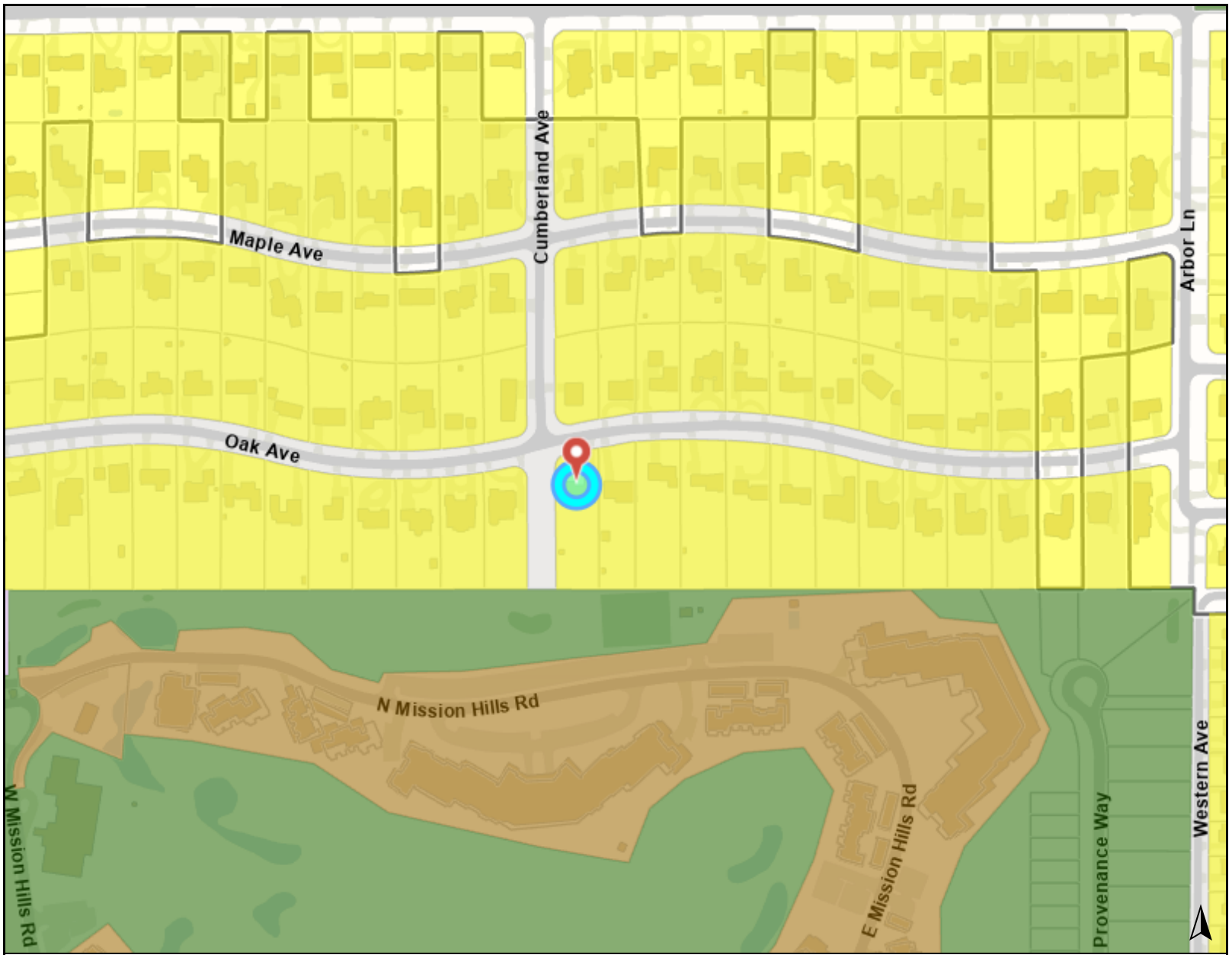

Legend

Zoning and Development

Future Land Use

- Public Recreation
- Private Recreation Facility
- Single Family
- Multi-Family 9-15 DUA
- Office - Professional

0 500 1000 ft

Print Date: 7/24/2025

Notes

Disclaimer: The GIS Consortium and MGP Inc. are not liable for any use, misuse, modification or disclosure of any map provided under applicable law. This map is for general information purposes only. Although the information is believed to be generally accurate, errors may exist and the user should independently confirm for accuracy. The map does not constitute a regulatory determination and is not a base for engineering design. A Registered Land Surveyor should be consulted to determine precise location boundaries on the ground.

GISConsortium | 3803 Oak Avenue

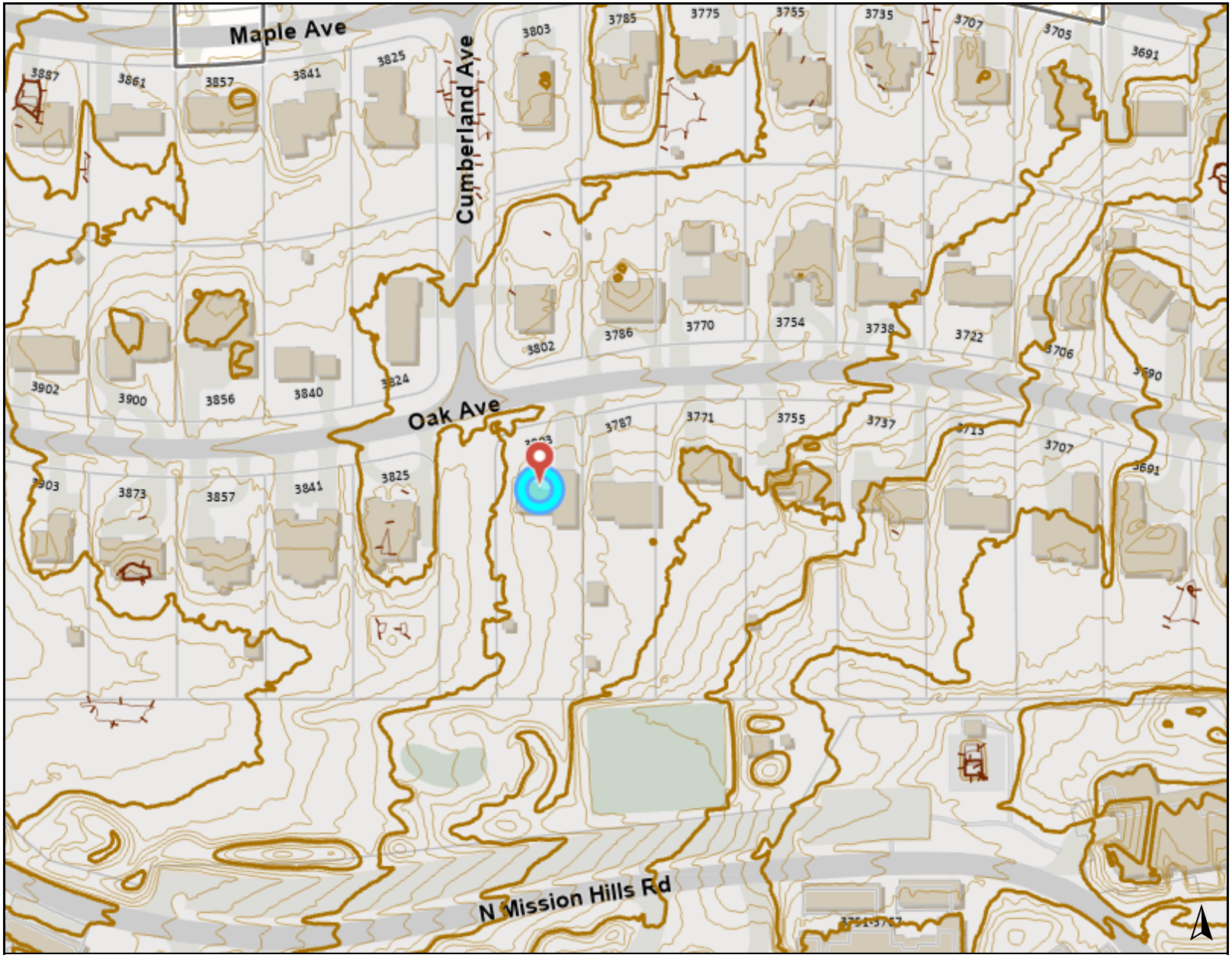

Legend

Cook County GIS - Contours

Cook County 1 Foot 2017 Contours

- <Null>
- 5 ft Index Contour
- 1 ft Intermediate Contour
- 5 ft Index Depression Contour
- 1 ft Intermediate Depression Contour

0 300 600 ft

Print Date: 7/24/2025

Notes

Disclaimer: The GIS Consortium and MGP Inc. are not liable for any use, misuse, modification or disclosure of any map provided under applicable law. This map is for general information purposes only. Although the information is believed to be generally accurate, errors may exist and the user should independently confirm for accuracy. The map does not constitute a regulatory determination and is not a base for engineering design. A Registered Land Surveyor should be consulted to determine precise location boundaries on the ground.

GISConsortium | 3803 Oak Avenue

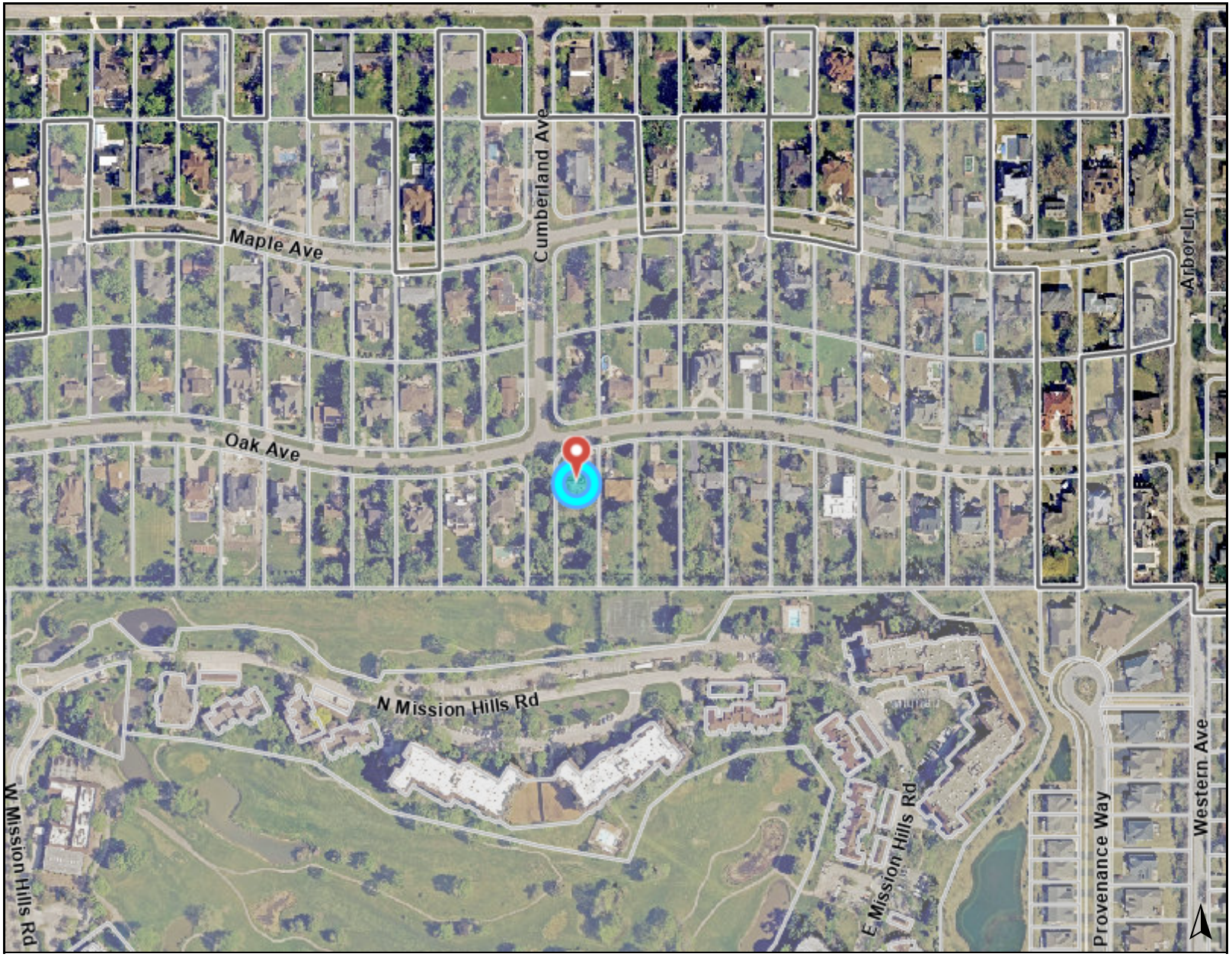

Legend

0 500 1000 ft

Print Date: 7/24/2025

Notes

Disclaimer: The GIS Consortium and MGP Inc. are not liable for any use, misuse, modification or disclosure of any map provided under applicable law. This map is for general information purposes only. Although the information is believed to be generally accurate, errors may exist and the user should independently confirm for accuracy. The map does not constitute a regulatory determination and is not a base for engineering design. A Registered Land Surveyor should be consulted to determine precise location boundaries on the ground.

DANIEL CREANEY COMPANY
CIVIL ENGINEERING CONSULTANTS
Since 1976

July 25, 2025

Mr. Mike Korman, Highway Commissioner
NORTHFIELD TOWNSHIP
237 Melvin Dr.
Northbrook, IL 60062

RE: CUMBERLAND AVENUE ROW ADJACENT TO
3803 OAK AVENUE
PROJECT NO. 8427

Dear Mr. Korman,

At the Townships direction we have reviewed the conditions of the Cumberland Ave. right-of-way south of Oak Avenue to the Mission Hills property. It is our understanding that several public utilities are present within the right-of-way and a future watermain is proposed. Additionally, there is an existing overland flow route draining over 5 acres that runs through this portion of right-of-way, with 100-yr inundation in the southwest corner of the right-of-way.

The present portion of Cumberland Ave. right-of-way allows access to the utilities, including the rear yard storm structure in the southwest corner. Future upsizing of the storm sewer in the right-of-way has been recommended in a MWRD drainage study. This portion of right-of-way may allow for additional surface runoff storage within the right-of-way in the future depending on the utility depths.

Therefore, it is our recommendation and our understanding the Township requires that this portion of Cumberland Ave. shall remain a right-of-way to provide for its existing utility and stormwater use, and allow for utility and stormwater improvements in the future.

Please feel free to contact me with any questions or comments. Thank you.

Sincerely,

DANIEL CREANEY COMPANY

Mark Toll
Vice President, Municipal Services

CC: Mike Korman ntroad@northfieldtownship.com

J:\DCC\8427\Reviews\Word Processing\Correspondence\3803 Oak Ave-Korman_Northfield Township-ROW.doc

August 12, 2025

3803 Oak Avenue: Pre-Annexation Agreement Public Hearing

Northbrook Board of Trustees Meeting

Existing Conditions

3803 Oak Avenue

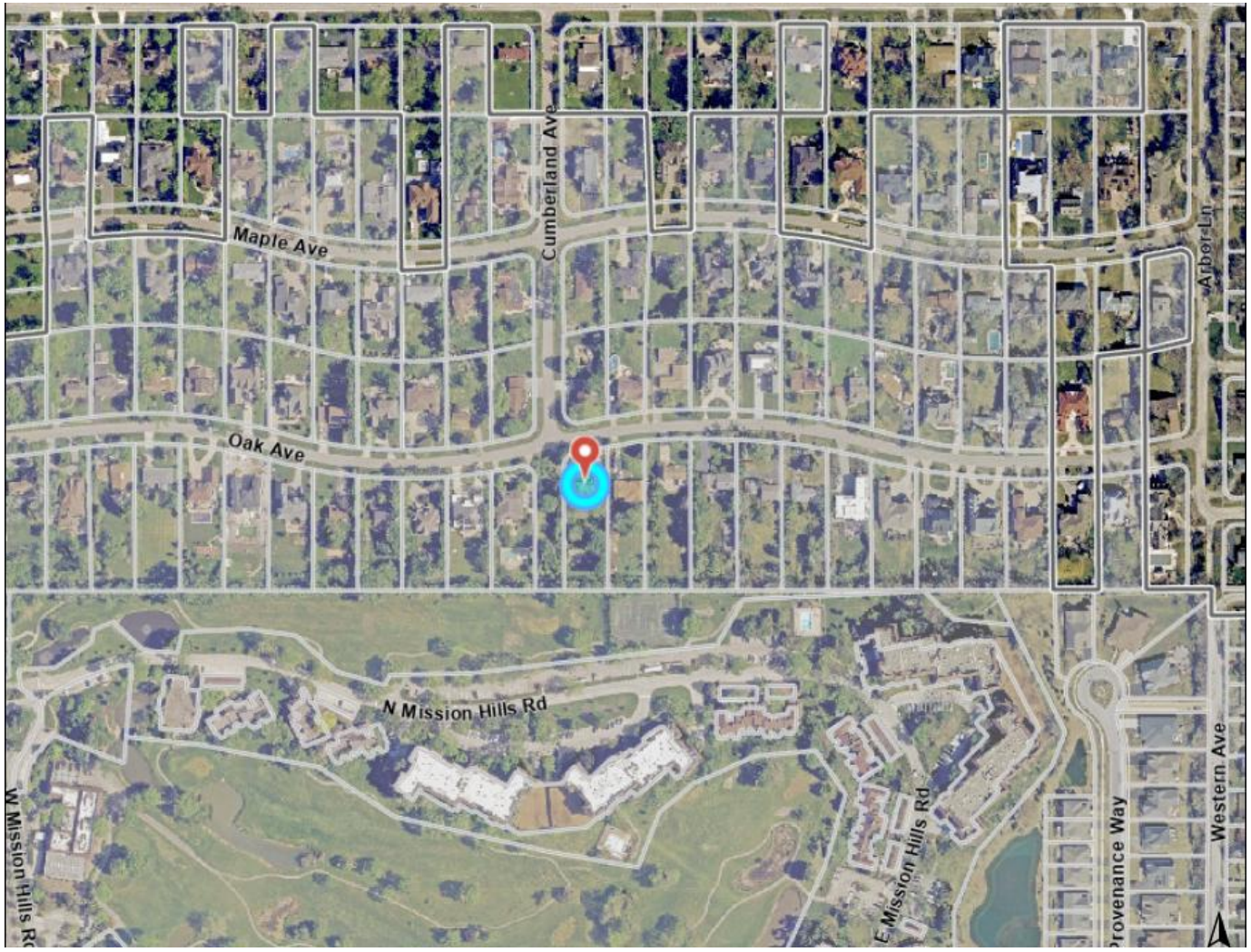

Pre-Annexation Agreements

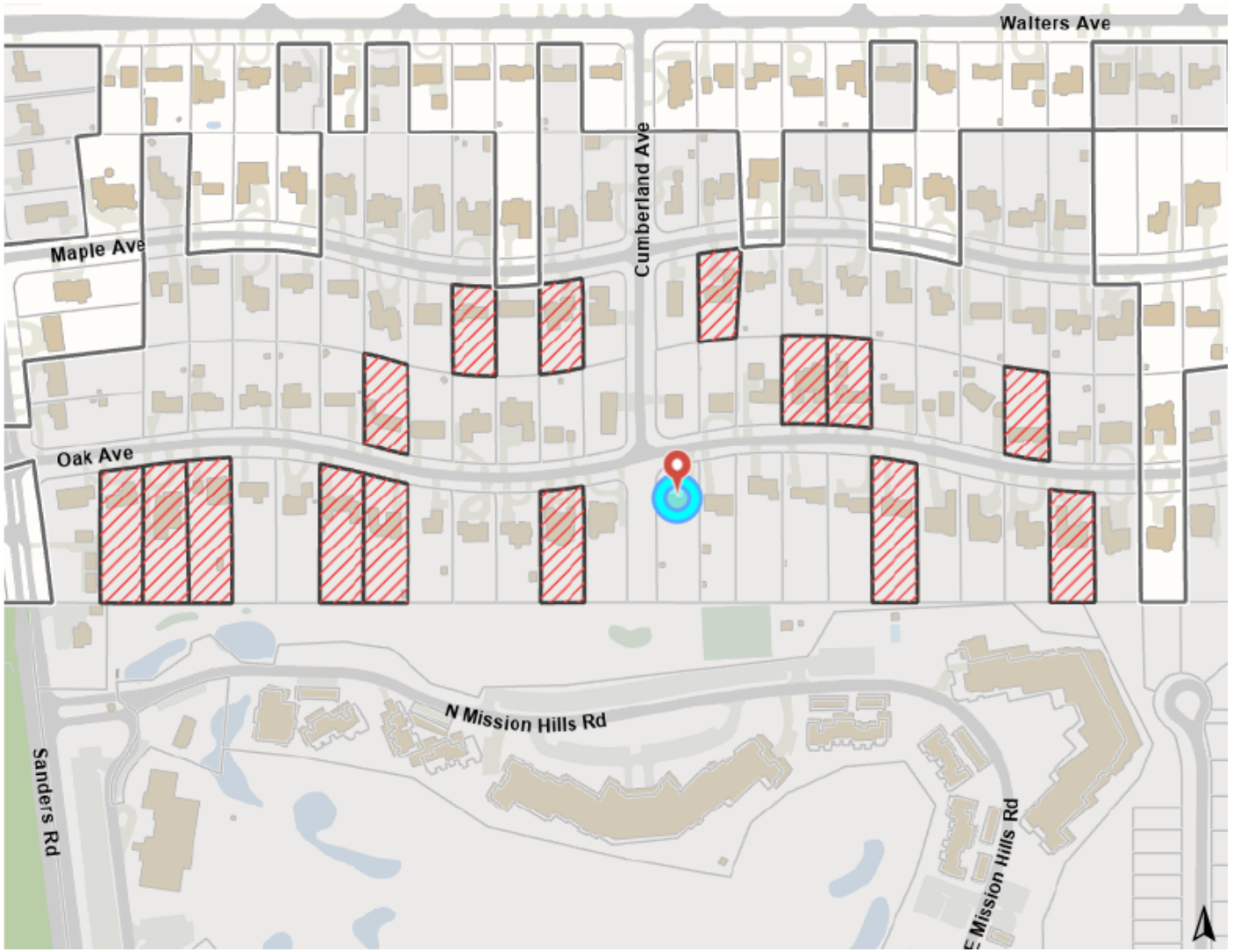

Legend

Community Boundaries

Annexation

Pre-Annexation Agreement

3803 Oak Avenue





Proposed Plan

Plat of Survey

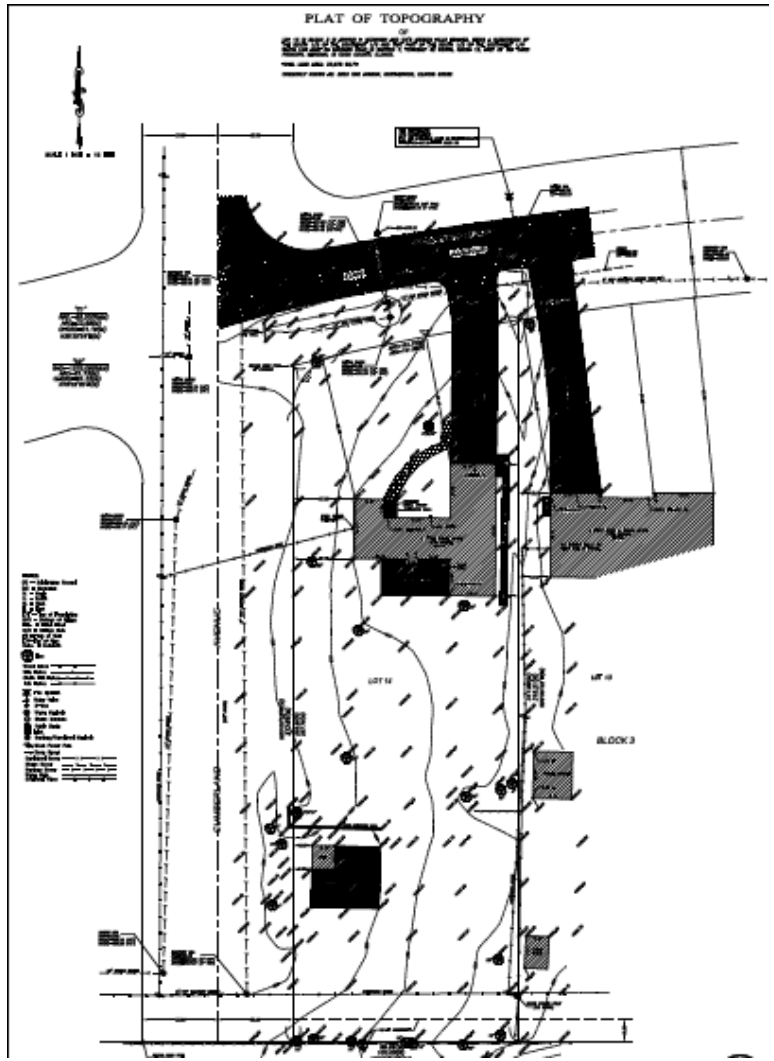

- **Previous home to be demolished**
- **New home built per Cook County requirements**
- **Property Owner wants to connect to Village water utilities**
- **Recapture fee paid to the Village of Northbrook**

Proposed Plan

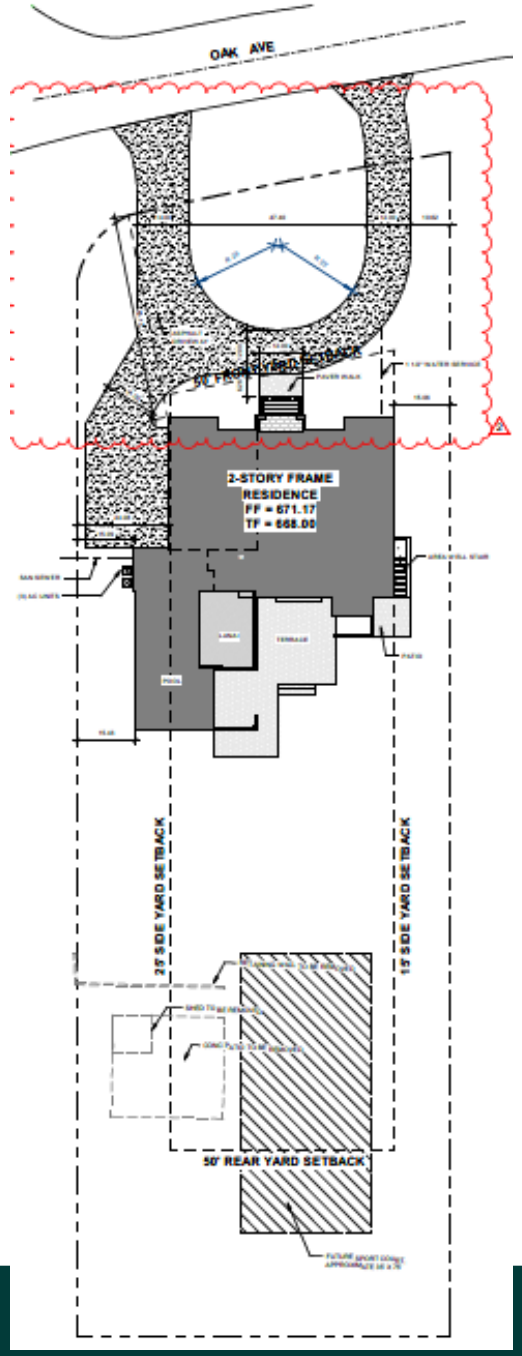

Proposed Site Plan as submitted with the pre-annexation application would be compliant with the zoning standards of the R-3 District in Northbrook

Items to Consider

Items to Consider

Approval of the Draft Resolution authorizing the Pre-Annexation Agreement

August 12, 2025

3803 Oak Avenue: Pre-Annexation Agreement Public Hearing

Northbrook Board of Trustees Meeting

MEMORANDUM

To: Village Manager Cara Pavlicek
From: Director of Development and Planning Services Department Amy McEwan
Date: 2025-08-12
Subject: A Resolution Authorizing the Approval and Execution of the Pre-Annexation Agreement by and between Village of Northbrook and Richard Little and Vanessa Walton as the Owner of 3803 Oak Avenue (PPA-25-05)

Overview
Consideration of a Resolution to approve a pre-annexation agreement for a single-family lot in the Mission Hills neighborhood of Northbrook.

Fiscal Impact
Recapture fees have been paid in full.

Recommendation
Approval.

Background

On August 12, 2025, the Board of Trustees is scheduled to conduct a public hearing of an application submitted by Richard Little and Vanessa Walton as the owners of the property commonly known as 3803 Oak Avenue. The applicant is requesting to consider the approval of a pre-annexation agreement to allow connecting to the Village water supply. Approval of a pre-annexation agreement is required because the property is not contiguous to the corporate limits of the Village. If the Board finds this agreement acceptable, they may authorize the execution of the agreement by adopting the attached resolution. A public hearing is required before the Village Board to grant approval of a pre-annexation agreement.

Notice of the public hearing for the 3803 Oak Avenue pre-annexation agreement was published in the July 24, 2025 edition of the Northbrook Star.

The Subject Property is: located on the southeast corner of Oak Avenue, and Cumberland Avenue; approximately 31,066 square feet in size and currently improved with a single family home; designated as appropriate for single family residential in the Village's Comprehensive Plan; surrounded by unincorporated single-

family properties to the north, east, and west; and to the south is the Mission Hills condominium complex; not located within the 100-year flood plain; and not located in proximity to any areas identified in the Master Stormwater Management Plan.

The concept of allowing property owners in the Mission Hills Estates area to enter into pre-annexation agreements was approved in general terms by the Board of Trustees on January 22, 2008 as part of the authorization to create a recapture ordinance for the extension of public water into this area despite the fact that it is not within the Village. The recapture ordinance (Ordinance No. 08-06) established a procedure whereby properties that are within the Mission Hills Estates area could tie into the Village's water system, even if they were not eligible for annexation at this time (i.e. contiguous to corporate limits) so long as:
They enter into a pre-annexation agreement stipulating that they would annex as soon as they were eligible to do so; and
They pay the recapture fees prior to making the connection to the Village water system.

The Board has approved pre-annexation agreements for a number of properties in the Mission Hills Estates. The single-family home on the site will be demolished and the applicant has filed a building permit application with Cook County for a new single-family home. We have included a series of exhibits depicting the existing conditions near the property, including aerial images and topography. The properties in the vicinity are all approximately 20,000 – 30,000 square feet in area, which is consistent with the Village R-3 zoning district.

Staff reviewed the architectural site plan showing compliance with the bulk requirements of the R-3 district in the Village of Northbrook, except the corner side yard along the west property line. Corner side yard is located adjacent to an unimproved portion of Cumberland Avenue, which is under the jurisdiction of Northfield Township Road District. Per correspondence received from the Northfield Township Road District (attached), they have determined that this portion of the right-of-way would remain undeveloped due to the presence of utility lines. Therefore, for zoning purposes, the Village staff has determined the west yard to be an interior side yard, which will be in compliance with the requirements of R-3 District. The pre-annexation agreement has been reviewed by the Village Attorney. Staff sees no issues with the approval of the pre-annexation agreement as the action would be consistent with Village policies. The Applicant has paid the Village recapture fee assessed for this property in its entirety. A building permit will be required prior to connecting to the Village water service. The Applicant and staff will attend the August 12, 2025 Board of Trustees meeting to answer any questions that may arise.

Resolution Approving Pre-Annexation Agreement - 3803 Oak
Resolution Exhibits A-C - 3803 Oak
Supplemental - Applicant Submittal - 3803 Oak

Resolution No. 2025-R-__

BE IT RESOLVED by the Board of Trustees of the Village of Northbrook, County of Cook and State of Illinois, THAT:

A Resolution Authorizing the Approval and Execution of the Pre-Annexation Agreement by and between Village of Northbrook and Richard Little and Vanessa Walton as the Owner of 3803 Oak Avenue

is hereby approved, as follows:

Section 1. Recitals.

Richard Little and Vanessa Walton (the "***Owners***") are the owners of record of a parcel of real estate ("***Property***") located in unincorporated Cook County and commonly known as 3803 Oak Avenue.

The Village has constructed and installed an extension to its water distribution system to service the Property and other real estate in the area on a shared cost basis.

The Village and the Owners desire to enter into a Pre-Annexation Agreement ("***Pre-Annexation Agreement***") to establish conditions on the connection of the Property to the Village's water distribution system as well as the subsequent development, annexation and zoning of the Property.

Pursuant to notice published in the *Northbrook Star* on July 24, 2025, as required by Section 11-15.1-1 of the Illinois Municipal Code, 65 ILCS 5/11-15.1-1 *et seq.*, the Village Board held a public hearing on August 12, 2025, regarding the Pre-Annexation Agreement.

Pursuant to Section 11-15.1-3 of the Illinois Municipal Code, approval of the Pre-Annexation Agreement will require a two-thirds vote of the corporate authorities holding office.

The Village of Northbrook and the Owners have agreed on the terms and conditions of the Pre-Annexation Agreement and the corporate authorities, after due and careful consideration, have concluded that the annexation, zoning and use of the Property pursuant to and in accordance with the Pre-Annexation Agreement would further enable the Village to control the development of the area and would serve the best interests of the Village.

Section 2. Description of Property.

The Property is commonly known as 3803 Oak Avenue, which is legally described in ***Exhibit A*** and depicted in ***Exhibit B*** attached to and, by this reference, made a part of this Resolution.

Section 3. Approval of Pre-Annexation Agreement.

The Pre-Annexation Agreement by and between the Village of Northbrook and Richard Little and Vanessa Walton as the owner of the property; shall be, and is hereby, approved in substantially the form presented to the Board of Trustees at the public hearing, and attached to this Resolution as ***Exhibit C***.

Section 4. Authorization to Execute.

The Village President and the Village Clerk are hereby authorized and directed to execute and seal, on behalf of the Village, the Pre-Annexation Agreement.

Section 5. Recordation.

The Village Attorney is hereby authorized and directed to cause the Pre-Annexation Agreement to be recorded with the Office of the Cook County Clerk's Office, following execution of the document by the Village and the Owners.

Section 6. Execution by Owners.

The approval in Section 3 of this Resolution, and the authorization and direction in Sections 4 and 5 of this Resolution, are conditioned on and subject to the receipt by the Village Clerk of satisfactory evidence of title demonstrating that the Property is owned by the Owners and at least two original copies of the Pre-Annexation Agreement executed by the Owners. In the event such evidence of title and original copies are not so received by the Village Clerk within 60 days after the date of adoption of this Resolution, the Resolution and the authority granted herein shall, at the option of the Board of Trustees, be null and void and of no force or effect.

PASSED: This __th day of _____, 2025.

AYES: (_)

NAYS: (_)

ABSENT: (_)

ABSTAIN: (_)

_____
Village President

ATTEST:

_____
Village Clerk

EXHIBIT A

LEGAL DESCRIPTION

LOT 14 IN BLOCK 3 IN ARTHUR T. MCINTOSH AND CO'S. MISSION HILLS ESTATES; BEING A SUBDIVISION OF THE SOUTH HALF OF THE SOUTHEAST QUARTER AND THAT PART OF THE SOUTH HALF OF THE SOUTHWEST QUARTER WHICH LIES EAST OF SANDERS ROAD IN SECTION 7, TOWNSHIP 42 NORTH, RANGE 12 EAST OF THE THIRD PRINCIPAL MERIDIAN, IN COOK COUNTY, ILLINOIS.

PERMANENT INDEX NUMBER: 04-07-407-001-0000

Commonly known as 3803 Oak Avenue, Northbrook, Illinois, 60062.

EXHIBIT B

DEPICTION OF THE PROPERTY

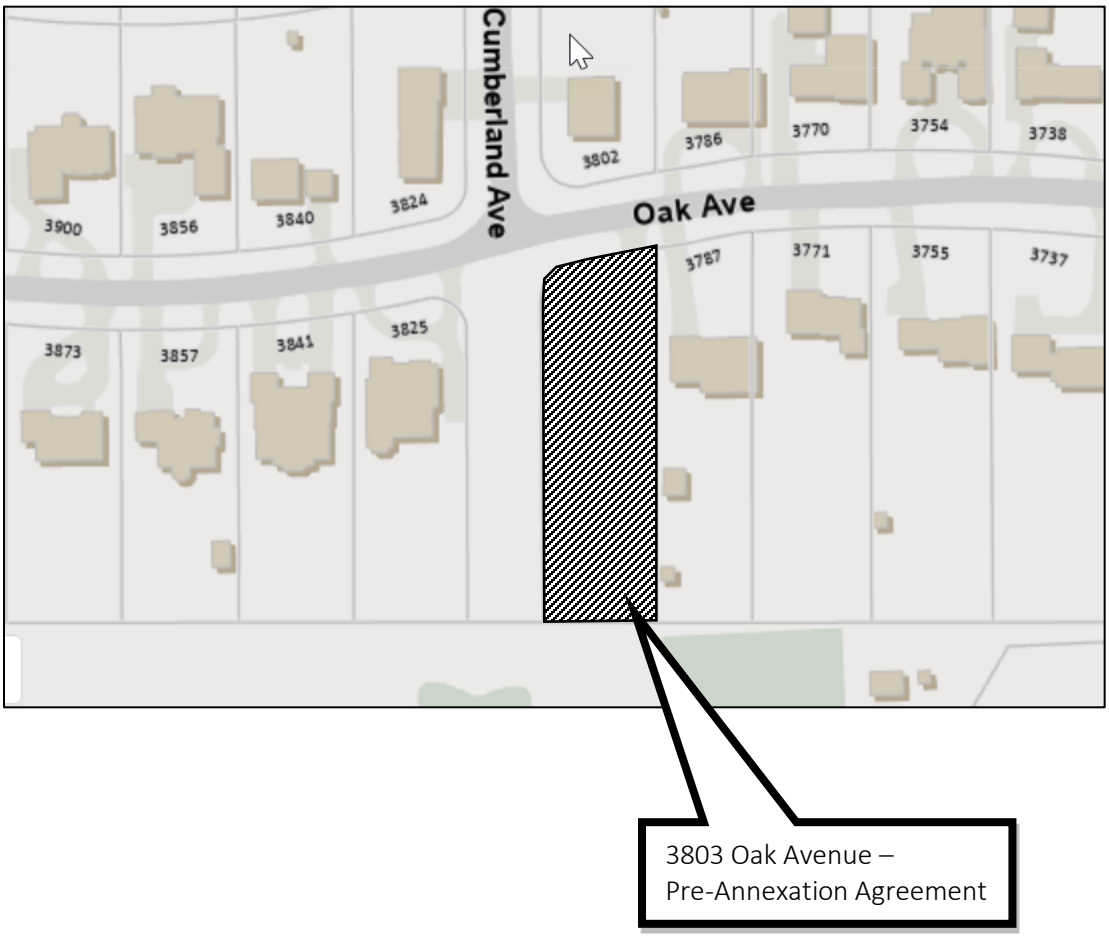

EXHIBIT C
PRE-ANNEXATION AGREEMENT

Prepared by:
Elrod Friedman LLP
350 North Clark Street Second Floor
Chicago, Illinois 60654

After recording, return to:

Recorder's Box 337

PRE-ANNEXATION AGREEMENT

BY AND BETWEEN

THE VILLAGE OF NORTHBROOK, ILLINOIS

AND

Richard Little & Vanessa Walton

3803 Oak Ave, Northbrook, IL

PRE-ANNEXATION AGREEMENT

THIS AGREEMENT is dated as of the 25th day of July, 2025, and is by and between the **VILLAGE OF NORTHBROOK**, an Illinois home rule municipal corporation (***"Village"***), and Richard Little & Vanessa Walton (***"Owner"***).

IN CONSIDERATION of the covenants and agreements set forth below, the Village and Owner agree as follows:

Section 1. Background.

A. Owner is the owner of record of the real property located at *3803 Oak Ave,* in unincorporated Cook County (***"Property"***). The Property is legally described on Exhibit A attached to this Agreement.

B. Owners are the sole elector/electors residing on the Property.

C. Owner desires (i) to connect a dwelling unit on the Property to the Village's Lake Michigan water distribution system in the Mission Hill Estates area (***"Mission Hills Water System Expansion"***), and (ii) to annex the Property to the Village in the future when the Property becomes contiguous to the corporate limits of the Village.

D. The Village has constructed and installed the Mission Hills Water System Expansion to serve the Property and other real estate in the area on a shared cost basis, and has adopted its Ordinance No. 08-06 to establish a method for the recapture of each parcel's fair share of the cost of the Expansion (***"Recapture Ordinance"***).

E. Owner and the Village desire to enter into this Agreement setting forth the conditions pursuant to which the Property would be able to obtain Lake Michigan water from the Village and the Property would be annexed to the Village, and other conditions relating to the use of the Property.

F. The Village has conducted all procedures required by law to approve and implement this Agreement, and this Agreement has been drafted, considered, and approved in

accordance with the Village's home rule authority and 65 ILCS 5/11-15.1-1 *et seq.* (***"Illinois Annexation Statute"***), and all other applicable laws.

Section 2. Connection to Mission Hills Water System Expansion. The Owner agrees to pay all recapture amounts due under the Recapture Ordinance within 30 days after the approval of this Agreement by the Village. The Owner further agrees to apply for a permit from the Village to connect to the Mission Hills Water System Expansion and to pay to the Village all applicable permit fees required by applicable law at the time of making the application and to connect to the Mission Hills Water System following issuance of the permit by the Village. The Owner will be responsible to install, at its sole cost and expense, all necessary service lines and appurtenances to connect the single-family dwelling on the Property, as well as any accessory structures requiring water supply, to the Mission Hills Water System Expansion.

Section 3. Annexation to the Village. Owner shall file a written petition with the Village, in accordance with applicable law and in the form attached hereto as Exhibit B (***"Petition"***), requesting annexation of the Property to the Village either: (A) concurrent with the execution of this Agreement, if the Property is contiguous to the Village at that time, or (B) within 30 days after notice by the Village to the Owner that the Property has become contiguous to the Village. Upon receipt of the Petition, the Village agrees to take all required action to annex the Property to the Village, subject to the terms of this Agreement. During the term of this Agreement, Owner shall not seek annexation of the Property to any municipality other than the Village.

Section 4. Zoning of the Property Upon Annexation. Upon annexation of the Property to the Village, the Property shall be zoned in the Village's R-3 Single Family Residential zoning district (***"R-3 District"***) pursuant to Section 2-104 of the Village's Zoning Code without holding any hearing, if permitted by applicable law. If Owner desires that the Property be zoned in any other district, Owner must seek such other zoning through the Village rezoning procedures applicable at that time. However, the Village shall have no obligation to zone the Property to any district other than the R-3 District.

Section 5. Use of the Property.

A. Prior to Annexation. At all times prior to annexation, Owner agrees to use the Property only in accordance with the provisions of the R-3 District as it may be amended from time to time. Specifically, no uses or structures shall be allowed on the Property other than those allowed in the R-3 District, irrespective of any otherwise applicable zoning or building code provisions; however, Owner shall be allowed to continue to retain any structures on the Property that are in existence as of the date of this Agreement even if such structures do not comply with the R-3 District and Owner shall cease all nonconforming uses within one year following execution of this Agreement. Owner agrees that the construction of any new development, building, or structure on the Property, or the reconstruction or substantial change of any existing building or structure on the Property shall comply with all applicable provisions of the R-3 District and the Village's Zoning Code, and agrees to submit to the Village a copy of any permit application submitted to the County of Cook for such construction, reconstruction or other substantial change to enable the Village to make a determination of compliance with the Village's Zoning Code. Owner agrees to provide a copy of a current plat of survey of the Property, showing current conditions on the Property, and to cooperate with the Village in performing an inspection of the Property to determine or create a "baseline" survey of the uses and structures existing on the Property as of the date of this Agreement.

B. After Annexation. Upon annexation of the Property to the Village, the Property shall be subject to all applicable provisions of the Village's Zoning Code, including the provisions relating to non-conforming structures and uses.

Section 6. Amendment. This Agreement shall not be amended or terminated without the written consent of both parties to this Agreement.

Section 7. Entire Agreement. This Agreement is the full, complete and entire agreement of the parties.

Section 8. **Term**. This Agreement shall be in full force and effect from and after its execution by all parties for the maximum term allowed by the Illinois Annexation Statute, which, as of the date of execution of this Agreement, is 20 years.

Section 9. **Successors; Recording.** This Agreement shall run with and bind the Property, and shall obligate and benefit the parties hereto and their respective legal representatives, heirs, grantees, successors, and assigns. This Agreement shall be recorded in the office of the Cook County Clerk.

IN WITNESS WHEREOF, the parties have caused their duly authorized representatives to execute this Agreement as of the date on the first page of this Agreement.

ATTEST:

By: _____
Village Clerk

ATTEST/WITNESS:

_____

ATTEST/WITNESS:

_____

VILLAGE OF NORTHBROOK

By: _____
Village President

OWNER

_____

OWNER

_____

4730804_v6

ACKNOWLEDGEMENT

STATE OF ILLINOIS)
) SS
COUNTY OF COOK)

This instrument was acknowledged before me on _____, 20____, by _____, the Village President of the **VILLAGE OF NORTHBROOK**, an Illinois home rule municipal corporation, and by _____, the Village Clerk of said municipal corporation.

_____
Signature of Notary

SEAL:
My Commission expires: _____

ACKNOWLEDGEMENT

STATE OF ILLINOIS)
) SS
COUNTY OF ~~COOK~~ Lake)

This instrument was acknowledged before me on 25-July, 2025, by Richard Little & Vanessa Walton, known to me to be the person(s) whose name(s) (is) (are) subscribed to the foregoing instrument and who did acknowledge that (he) (she) (they) executed the above instrument, duly authorized, voluntarily and as (his) (her) (their) free act and deed.

MANHAR KAPADIA
OFFICIAL SEAL
Notary Public - State Of Illinois
Commission No. 948154
My Commission Expires 09 March 2026

M. L. Kapadia
Signature of Notary

SEAL:
My Commission expires: 03-09-26

EXHIBIT A

LEGAL DESCRIPTION AND GENERAL DEPICTION OF THE PROPERTY

LOT 14 IN BLOCK 3 IN ARTHUR T. MCINTOSH AND CO'S MISSION HILLS ESTATES, BEING A SUBDIVISION OF THE SOUTH 1/2 OF THE SOUTHEAST 1/4 ANDTHAT PART OF THE SOUTH 1/2 OF THE SOUTHWEST 1/4 WHICH LIES EAST OF SANDERS ROAD IN SECTION 7, TOWNSHIP 42 NORTH, RANGE 12, EAST OF THE THIRD PRINCIPAL MERIDIAN, IN COOK COUNTY, ILLINOIS.

Commonly known as 3803 Oak Ave, Northbrook, IL
Cook County, Illinois 60062

Permanent Real Estate Index No.: 04-07-407-001-0000

EXHIBIT B

PETITION FOR ANNEXATION PURSUANT TO SECTION 7-1-8 OF THE ILLINOIS MUNICIPAL CODE

TO: THE PRESIDENT AND BOARD OF TRUSTEES
OF THE VILLAGE NORTHBROOK, COOK COUNTY, ILLINOIS

THIS PETITION is filed pursuant to Section 7-1-8 of the Illinois Municipal Code (65 ILCS 5/7-1-8 (2006)).

Richard Little & Vanessa Walton (***"Petitioners"***), being first sworn on oath, state the following:

1. Petitioners are the sole owners of record of the territory legally described on Exhibit A attached to and made a part of this Petition by this reference (***"Property"***).

2. Petitioners include at least 51% of the electors residing on the Property.

3. No part of the Property is within the corporate limits of any municipality.

4. The- Property is contiguous to the Village of Northbrook (***"Village"***).

5. The Petitioners hereby request that the Village annex the Property, together with all highways adjacent to or within the Property that are not within the corporate limits of any municipality, by an ordinance passed and approved by the corporate authorities of the Village, pursuant to Section 7-1-8 of the Illinois Municipal Code, which annexation shall be subject to that certain "Annexation Agreement by and between the Village of Northbrook, Illinois and Richard Little & Vanessa Walton," executed on or about 7/25/~~2025~~, 2025 and recorded with the Cook County Recorder of Deeds as Document No. _____.

DATED this 25 day of July, 2025

Petitioners:

STATE OF ILLINOIS)
) SS
COUNTY OF ~~COOK~~ Lake)

This instrument was acknowledged before me on 25 July, 2025, by Richard Little, Vanessa Walton known to me to be the person(s) whose name(s) (is) (are) subscribed to the foregoing instrument and who did acknowledge that (he) (she) (they) executed the above instrument, duly authorized, voluntarily and as (his) (her) (their) free act and deed.

MANHAR KAPADIA
OFFICIAL SEAL
Notary Public - State Of Illinois
Commission No. 948154
My Commission Expires 09 March 2026

Signature of Notary

SEAL

My Commission expires: 03-09-26

THOMAS ARCHITECTS
www.thomasarch.com

July 1, 2025

Village of Northbrook
Development and Planning Services
1225 Cedar Lane
Northbrook, IL 60062

RE: Pre Annexation Narrative
3803 Oak Ave, Northbrook, IL

Dear Reviewer,

We respectfully submit this letter on behalf of the homeowners, Rich and Vanessa Little, as the written explanation for the proposed pre-annexation application to the Village of Northbrook.

The project includes a new single family residence located at the address referenced above. The owners are requesting connection to the Village of Northbrook Mission Hills Water System for their new home and understand that in order to do so, they will need to apply for a pre-annexation into the Village of Northbrook.

The existing home will be demolished and a new residence will be built in its place. The proposed architectural plans and plat of survey are included for reference. It is our understanding that the home, when annexed, will be within the R-3 zoning district for the Village of Northbrook, and should meet the bulk requirements of this district. Please note that there is a small section of unimproved right of way directly west of this property, and in discussions with Cook County, the west side of the subject property is considered a corner side yard. The request to reduce the west corner side setback from 25' to 15'-1" was presented and approved by the Cook County Zoning Board of Appeals on July 9, 2025.

The owners are aware of the recapture fee associated with tapping into the Mission Hills Water System including all applicable fees and interest.

Please feel free to contact Thomas Architects with any further comments or questions that you may have regarding this project.

Sincerely,

Thomas Architects

Thomas Budzik, AIA

2800 S River Rd, Suite 305
Des Plaines, IL 60018
O| 877 . 205 . 3799

PRE-ANNEXATION EVALUATION FORM

Current Property Owner

Legal Name of Owner or Ownership Entity: RICHARD LITTLE & VANESSA WALTON
Primary Contact: RICHARD LITTLE
Address: 120 CHESTNUT ROAD
City, State, Zip: NORTHBROOK, IL 60062
Phone: 2244303444
Email: Richard@serenitywm.com

Property Information *(if more than one parcel is involved in the request please include the information for all parcels)*

Site Location/Address: 3803 OAK AVE
Property Index Number(s): 0 4 - 0 7 -4 0 7 -0 0 1 -0 0 0 0
Size of Property: .071 ACRE (square feet/acres)
Size of Building Space, if applicable: _____ (square feet)
County Zoning: R-4
Proposed Zoning: R-4
Comprehensive Plan Designation: _____
Current Principal Use(s): SINGLE FAMILY RESIDENCE
Current Accessory Use(s): _____
Lot Area: 30825 Lot Width: 100' Lot Depth: 318.21'

Is the property held in trust? □ Yes ☒ No *If yes, please append names and signatures of all beneficiaries*
Is the property under contract? □ Yes ☒ No *If yes, please append name and signature of contract purchaser(s)*

Owner:
Signature
Richard Little
Print Name (and title, if signing on behalf of corporation or trust)

Owner:
Signature
Vanessa Walton
Print Name (and title, if signing on behalf of corporation or trust)

Doc#. 2502430016 Fee: $107.00
MONICA GORDON
COOK COUNTY CLERK'S OFFICE
Date 1/24/2025 9:29 AM Pg 1 of 3

Dec ID 20250101694083
ST/Co Stamp 1-315-381-680 ST Tax $499.00 CO Tax $249.50

WARRANTY DEED

After Recording Mail To:

Gryll Law
c/o: Brian D. Gryll
6703 N Cicero Ave
Lincolnwood, IL 60712

Send Subsequent Tax Bills To:

Richard Little & Vanessa Walton
120 Chestnut Road
Northbrook, IL 60062

THE GRANTORS, ILYA GILMAN AND FRANCINE BLETNITSKY GILMAN, husband and wife , of the CITY of NORTHBROOK, County of COOK, State of ILLINOIS, for and in consideration of ten dollars ($10.00) and other valuable consideration in hand paid, convey and warrant to:

RICHARD LITTLE AND
VANESSA WALTON a married couple

of the city of Northbrook , County of Cook , State of Illinois, not as Joint Tenants, not as Tenants in Common, but as TENANTS BY THE ENTIRETY, the following described Real Estate situated in the County of COOK in the State of Illinois:

hereby releasing and waiving all rights under and by virtue of the Homestead Exemption Laws of the State of Illinois. TO HAVE AND TO HOLD, said premises not in Tenancy in Common, but as TENANTS BY THE ENTIRETY, forever.

Permanent Index Number(s): 04-07-407-001-0000
Address of the Real Estate: 3803 Oak Avenue, Northbrook, IL 60062

SUBJECT TO: covenants, conditions and restrictions of record; public and utility easements; and subject only to real estate taxes for 2024 and subsequent years.

CT 24GNUD6291060DB
1/1

Property of Cook County Clerk's Office

DATED this 11 day of July, 2024

ILYA GILMAN

FRANCINE BLETNITSKY GILMAN

STATE OF IL }
COUNTY OF Cook } **SS.**

I, the undersigned, a Notary Public in and for said County, in the State aforesaid, DO HEREBY CERTIFY that **ILYA GILMAN AND FRANCINE BLETNITSKY GILMAN,** personally known to me to be the same persons whose names are subscribed to the foregoing instrument, appeared before me this day in person, and acknowledged that they signed, sealed and delivered this said instrument as their free and voluntary act, for the uses and purposes therein set forth, including the release and waiver of the right of homestead.

Given under my hand and official seal, this 11 day of July, 2024.

VIKTORIIA ZAMRII
Official Seal
Notary Public - State of Illinois
My Commission Expires Feb 9, 2027

NOTARY PUBLIC

This instrument prepared by: SHVARTSMAN LAW OFFICE,
3400 Dundee Rd Suite 215,
Northbrook, Illinois 60062.

Property of Cook County Clerk's Office

CHICAGO TITLE COMPANY

LEGAL DESCRIPTION

Order No.: 24GND629106NB

For APN/Parcel ID(s): 04-07-407-001-0000

LOT 14 IN BLOCK 3 IN ARTHUR T. MCINTOSH AND COMPANY'S MISSION HILLS ESTATES, BEING A SUBDIVISION OF THE SOUTH 1/2 OF THE SOUTHEAST 1/4 AND THAT PART OF THE SOUTH 1/2 OF THE SOUTHWEST 1/4 WHICH LIES EAST OF SANDERS ROAD OF SECTION 7, TOWNSHIP 42 NORTH, RANGE 12, EAST OF THE THIRD PRINCIPAL MERIDIAN, ACCORDING TO THE PLAT THEREOF REGISTERED IN THE OFFICE OF THE REGISTRAR OF TORRENS TITLES OF COOK COUNTY, ILLINOIS AS DOCUMENT LR1282197 IN COOK COUNTY, ILLINOIS.

Property of Cook County Clerk's Office

ALTA OWNER'S POLICY OF TITLE INSURANCE

issued by:

CHICAGO TITLE INSURANCE COMPANY

Policy Number:

24GND629106NB

This policy, when issued by the Company with a Policy Number and the Date of Policy, is valid even if this policy or any endorsement to this policy is issued electronically or lacks any signature.

Any notice of claim and any other notice or statement in writing required to be given to the Company under this policy must be given to the Company at the address shown in Condition 17.

COVERED RISKS

SUBJECT TO THE EXCLUSIONS FROM COVERAGE, THE EXCEPTIONS FROM COVERAGE CONTAINED IN SCHEDULE B, AND THE CONDITIONS, Chicago Title Insurance Company, a Florida corporation (the "Company"), insures as of the Date of Policy and, to the extent stated in Covered Risks 9 and 10, after the Date of Policy, against loss or damage, not exceeding the Amount of Insurance, sustained or incurred by the Insured by reason of:

1. The Title being vested other than as stated in Schedule A.
2. Any defect in or lien or encumbrance on the Title. Covered Risk 2 includes, but is not limited to, insurance against loss from:
   a. a defect in the Title caused by:
      i. forgery, fraud, undue influence, duress, incompetency, incapacity, or impersonation;
      ii. the failure of a person or Entity to have authorized a transfer or conveyance;
      iii. a document affecting the Title not properly authorized, created, executed, witnessed, sealed, acknowledged, notarized (including by remote online notarization), or delivered;
      iv. a failure to perform those acts necessary to create a document by electronic means authorized by law;
      v. a document executed under a falsified, expired, or otherwise invalid power of attorney;
      vi. a document not properly filed, recorded, or indexed in the Public Records, including the failure to have performed those acts by electronic means authorized by law;
      vii. a defective judicial or administrative proceeding; or
      viii. the repudiation of an electronic signature by a person that executed a document because the electronic signature on the document was not valid under applicable electronic transactions law.
   b. the lien of real estate taxes or assessments imposed on the Title by a governmental authority due or payable, but unpaid.
   c. the effect on the Title of an encumbrance, violation, variation, adverse circumstance, boundary line overlap, or encroachment (including an encroachment of an improvement across the boundary lines of the Land), but only if the encumbrance, violation, variation, adverse circumstance, boundary line overlap, or encroachment would have been disclosed by an accurate and complete land title survey of the Land.
3. Unmarketable Title.
4. No right of access to and from the Land.
5. A violation or enforcement of a law, ordinance, permit, or governmental regulation (including those relating to building and zoning), but only to the extent of the violation or enforcement described by the enforcing governmental authority in an Enforcement Notice that identifies a restriction, regulation, or prohibition relating to:
   a. the occupancy, use, or enjoyment of the Land;
   b. the character, dimensions, or location of an improvement on the Land;
   c. the subdivision of the Land; or
   d. environmental remediation or protection on the Land.
6. An enforcement of a governmental forfeiture, police, regulatory, or national security power, but only to the extent of the enforcement described by the enforcing governmental authority in an Enforcement Notice.

Copyright American Land Title Association. All rights reserved.

The use of this Form (or any derivative thereof) is restricted to ALTA licensees and ALTA members in good standing as of the date of use. All other uses are prohibited. Reprinted under license from the American Land Title Association.

AMERICAN LAND TITLE ASSOCIATION

7. An exercise of the power of eminent domain, but only to the extent:
   a. of the exercise described in an Enforcement Notice; or
   b. the taking occurred and is binding on a purchaser for value without Knowledge.
8. An enforcement of a PACA-PSA Trust, but only to the extent of the enforcement described in an Enforcement Notice.
9. The Title being vested other than as stated in Schedule A, the Title being defective, or the effect of a court order providing an alternative remedy:
   a. resulting from the avoidance, in whole or in part, of any transfer of all or any part of the Title to the Land or any interest in the Land occurring prior to the transaction vesting the Title because that prior transfer constituted a:
      i. fraudulent conveyance, fraudulent transfer, or preferential transfer under federal bankruptcy, state insolvency, or similar state or federal creditors' rights law; or
      ii. voidable transfer under the Uniform Voidable Transactions Act; or
   b. because the instrument vesting the Title constitutes a preferential transfer under federal bankruptcy, state insolvency, or similar state or federal creditors' rights law by reason of the failure:
      i. to timely record the instrument vesting the Title in the Public Records after execution and delivery of the instrument to the Insured; or
      ii. of the recording of the instrument vesting the Title in the Public Records to impart notice of its existence to a purchaser for value or to a judgment or lien creditor.
10. Any defect in or lien or encumbrance on the Title or other matter included in Covered Risks 1 through 9 that has been created or attached or has been filed or recorded in the Public Records subsequent to the Date of Policy and prior to the recording of the deed or other instrument vesting the Title in the Public Records.

DEFENSE OF COVERED CLAIMS

The Company will also pay the costs, attorneys' fees, and expenses incurred in defense of any matter insured against by this policy, but only to the extent provided in the Conditions.

Chicago Title Insurance Company

By:



Michael J. Nolan, President

Attest:



Marjorie Nemzura, Secretary

Copyright American Land Title Association. All rights reserved.

The use of this Form (or any derivative thereof) is restricted to ALTA licensees and ALTA members in good standing as of the date of use. All other uses are prohibited. Reprinted under license from the American Land Title Association.

EXCLUSIONS FROM COVERAGE

The following matters are excluded from the coverage of this policy, and the Company will not pay loss or damage, costs, attorneys' fees, or expenses that arise by reason of:

1. a. any law, ordinance, permit, or governmental regulation (including those relating to building and zoning) that restricts, regulates, prohibits, or relates to:
   i. the occupancy, use, or enjoyment of the Land;
   ii. the character, dimensions, or location of any improvement on the Land;
   iii. the subdivision of land; or
   iv. environmental remediation or protection.
   b. any governmental forfeiture, police, regulatory, or national security power.
   c. the effect of a violation or enforcement of any matter excluded under Exclusion 1.a. or 1.b.

   Exclusion 1 does not modify or limit the coverage provided under Covered Risk 5 or 6.
2. Any power of eminent domain. Exclusion 2 does not modify or limit the coverage provided under Covered Risk 7.
3. Any defect, lien, encumbrance, adverse claim, or other matter:
   a. created, suffered, assumed, or agreed to by the Insured Claimant;
   b. not Known to the Company, not recorded in the Public Records at the Date of Policy, but Known to the Insured Claimant and not disclosed in writing to the Company by the Insured Claimant prior to the date the Insured Claimant became an Insured under this policy;
   c. resulting in no loss or damage to the Insured Claimant;
   d. attaching or created subsequent to the Date of Policy (Exclusion 3.d. does not modify or limit the coverage provided under Covered Risk 9 or 10); or
   e. resulting in loss or damage that would not have been sustained if consideration sufficient to qualify the Insured named in Schedule A as a bona fide purchaser had been given for the Title at the Date of Policy.
4. Any claim, by reason of the operation of federal bankruptcy, state insolvency, or similar creditors' rights law, that the transaction vesting the Title as shown in Schedule A is a:
   a. fraudulent conveyance or fraudulent transfer;
   b. voidable transfer under the Uniform Voidable Transactions Act; or
   c. preferential transfer:
      i. to the extent the instrument of transfer vesting the Title as shown in Schedule A is not a transfer made as a contemporaneous exchange for new value; or
      ii. for any other reason not stated in Covered Risk 9.b.
5. Any claim of a PACA-PSA Trust. Exclusion 5 does not modify or limit the coverage provided under Covered Risk 8.
6. Any lien on the Title for real estate taxes or assessments, imposed or collected by a governmental authority that becomes due and payable after the Date of Policy. Exclusion 6 does not modify or limit the coverage provided under Covered Risk 2.b.
7. Any discrepancy in the quantity of the area, square footage, or acreage of the Land or of any improvement to the Land.

Copyright American Land Title Association. All rights reserved.

The use of this Form (or any derivative thereof) is restricted to ALTA licensees and ALTA members in good standing as of the date of use. All other uses are prohibited. Reprinted under license from the American Land Title Association.

Transaction Identification Data, for which the Company assumes no liability as set forth in Condition 9.d.:

Issued By: Yelena R. Shvartsman
3400 Dundee Suite 215
Northbrook, IL 60062

Property Address: 3803 Oak Ave, Northbrook, IL 60062

SCHEDULE A

Policy Number: 24GND629106NB

Date of Policy	Amount of Insurance
January 24, 2025	$499,000.00

1. The Insured is:

   Richard Little and Vanessa Walton

2. The estate or interest in the Land insured by this policy is:

   Fee Simple

3. The Title is vested in:

   Richard Little and Vanessa Walton, a married couple, not as joint tenants, not as tenants in common, but as tenants by the entirety

4. The Land is described as follows:

   SEE EXHIBIT "A" ATTACHED HERETO AND MADE A PART HEREOF

THIS POLICY VALID ONLY IF SCHEDULE B IS ATTACHED

END OF SCHEDULE A

Copyright American Land Title Association. All rights reserved.

The use of this Form (or any derivative thereof) is restricted to ALTA licensees and ALTA members in good standing as of the date of use. All other uses are prohibited. Reprinted under license from the American Land Title Association.

EXHIBIT "A"

Legal Description

LOT 14 IN BLOCK 3 IN ARTHUR T. MCINTOSH AND COMPANY'S MISSION HILLS ESTATES, BEING A SUBDIVISION OF THE SOUTH 1/2 OF THE SOUTHEAST 1/4 AND THAT PART OF THE SOUTH 1/2 OF THE SOUTHWEST 1/4 WHICH LIES EAST OF SANDERS ROAD OF SECTION 7, TOWNSHIP 42 NORTH, RANGE 12, EAST OF THE THIRD PRINCIPAL MERIDIAN, ACCORDING TO THE PLAT THEREOF REGISTERED IN THE OFFICE OF THE REGISTRAR OF TORRENS TITLES OF COOK COUNTY, ILLINOIS AS DOCUMENT LR1282197 IN COOK COUNTY, ILLINOIS.

Copyright American Land Title Association. All rights reserved.

The use of this Form (or any derivative thereof) is restricted to ALTA licensees and ALTA members in good standing as of the date of use. All other uses are prohibited. Reprinted under license from the American Land Title Association.

SCHEDULE B
EXCEPTIONS FROM COVERAGE

Some historical land records contain Discriminatory Covenants that are illegal and unenforceable by law. This policy treats any Discriminatory Covenant in a document referenced in Schedule B as if each Discriminatory Covenant is redacted, repudiated, removed, and not republished or recirculated. Only the remaining provisions of the document are excepted from coverage.

This policy does not insure against loss or damage and the Company will not pay costs, attorneys' fees, or expenses resulting from the terms and conditions of any lease or easement identified in Schedule A, and the following matters:

1. **Rights or claims of parties in possession not shown by Public Records.**

2. **Any encroachment, encumbrance, violation, variation, or adverse circumstance affecting the title that would be disclosed by an accurate and complete land survey of the Land.**

3. **Easements, or claims of easements, not shown by the Public Records.**

4. **Any lien, or right to a lien, for services, labor or material heretofore or hereafter furnished, imposed by law and not shown by the Public Records.**

5. **Taxes or special assessments which are not shown as existing liens by the Public Records.**

6. **We should be furnished a properly executed ALTA statement and, unless the land insured is a condominium unit, a survey if available. Matters disclosed by the above documentation will be shown specifically.**

7. Any defect, lien, encumbrance, adverse claim, or other matter that appears for the first time in the Public Records or is created, attaches, or is disclosed between the Commitment Date and the date on which all of the Schedule B, Part I-Requirements are met.

8.

1. Taxes for the year(s) 2024 and 2025
   2025 taxes are not yet due or payable.

1A. Note: 2024 first installment not yet due or payable

Perm tax#	Pcl	Year	1st Inst	Stat	2nd Inst	Stat
04-07-407-001-0000	1 of 1		2023	$5,431.57	Paid	$3,866.14 Paid
		2024	$5,113.74	Unpaid		

9. Restrictions as to location of water wells and waste disposal systems as shown on the plat document number 1282197.

END OF SCHEDULE B

Copyright American Land Title Association. All rights reserved.

The use of this Form (or any derivative thereof) is restricted to ALTA licensees and ALTA members in good standing as of the date of use. All other uses are prohibited. Reprinted under license from the American Land Title Association.

SCHEDULE B
EXCEPTIONS FROM COVERAGE
(continued)

Title Insurance Agent:

Yelena R. Shvartsman
3400 Dundee Suite 215
Northbrook, IL 60062
Phone: (847)714-0210
Fax: (847)714-0210

Copyright American Land Title Association. All rights reserved.

The use of this Form (or any derivative thereof) is restricted to ALTA licensees and ALTA members in good standing as of the date of use. All other uses are prohibited. Reprinted under license from the American Land Title Association.

CONDITIONS

1. DEFINITION OF TERMS

In this policy, the following terms have the meanings given to them below. Any defined term includes both the singular and the plural, as the context requires:

a. "Affiliate": An Entity:
   i. that is wholly owned by the Insured;
   ii. that wholly owns the Insured; or
   iii. if that Entity and the Insured are both wholly owned by the same person or entity.

b. "Amount of Insurance": The Amount of Insurance stated in Schedule A, as may be increased by Condition 8.d. or decreased by Condition 10 or 11; or increased or decreased by endorsements to this policy.

c. "Date of Policy": The Date of Policy stated in Schedule A.

d. "Discriminatory Covenant": Any covenant, condition, restriction, or limitation that is unenforceable under applicable law because it illegally discriminates against a class of individuals based on personal characteristics such as race, color, religion, sex, sexual orientation, gender identity, familial status, disability, national origin, or other legally protected class.

e. "Enforcement Notice": A document recorded in the Public Records that describes any part of the Land and:
   i. is issued by a governmental agency that identifies a violation or enforcement of a law, ordinance, permit, or governmental regulation;
   ii. is issued by a holder of the power of eminent domain or a governmental agency that identifies the exercise of a governmental power; or
   iii. asserts a right to enforce a PACA-PSA Trust.

f. "Entity": A corporation, partnership, trust, limited liability company, or other entity authorized by law to own title to real property in the State where the Land is located.

g. "Insured":
   i. (a). The Insured named in Item 1 of Schedule A;
      (b). the successor to the Title of an Insured by operation of law as distinguished from purchase, including heirs, devisees, survivors, personal representatives, or next of kin;
      (c). the successor to the Title of an Insured resulting from dissolution, merger, consolidation, distribution, or reorganization;
      (d). the successor to the Title of an Insured resulting from its conversion to another kind of Entity; or
      (e). the grantee of an Insured under a deed or other instrument transferring the Title, if the grantee is:
         (1). an Affiliate;
         (2). a trustee or beneficiary of a trust created by a written instrument established for estate planning purposes by an Insured;
         (3). a spouse who receives the Title because of a dissolution of marriage;
         (4). a transferee by a transfer effective on the death of an Insured as authorized by law; or
         (5). another Insured named in Item 1 of Schedule A.
   ii. The Company reserves all rights and defenses as to any successor or grantee that the Company would have had against any predecessor Insured.

h. "Insured Claimant": An Insured claiming loss or damage arising under this policy.

i. "Knowledge" or "Known": Actual knowledge or actual notice, but not constructive notice imparted by the Public Records.

j. "Land": The land described in Item 4 of Schedule A and improvements located on that land at the Date of Policy that by State law constitute real property. The term "Land" does not include any property beyond that described in Schedule A, nor any right, title, interest, estate, or easement in any abutting street, road, avenue, alley, lane, right-of-way, body of water, or waterway, but does not modify or limit the extent that a right of access to and from the Land is insured by this policy.

k. "Mortgage": A mortgage, deed of trust, trust deed, security deed, or other real property security instrument, including one evidenced by electronic means authorized by law.

l. "PACA-PSA Trust": A trust under the federal Perishable Agricultural Commodities Act or the federal Packers and Stockyards Act or a similar State or federal law.

m. "Public Records": The recording or filing system established under State statutes in effect at the Date of Policy under which a document must be recorded or filed to impart constructive notice of matters relating to the Title to a purchaser for value without Knowledge. The term "Public Records" does not include any other recording or filing system, including any pertaining to environmental remediation or protection, planning, permitting, zoning, licensing, building, health, public safety, or national security matters.

n. "State": The state or commonwealth of the United States within whose exterior boundaries the Land is located. The term "State" also includes the District of Columbia, the Commonwealth of Puerto Rico, the U.S. Virgin Islands, and Guam.

o. "Title": The estate or interest in the Land identified in Item 2 of Schedule A.

p. "Unmarketable Title": The Title affected by an alleged or apparent matter that would permit a prospective purchaser or lessee of the Title or a lender on the Title to be released from the obligation to purchase, lease, or lend if there is a contractual condition requiring the delivery of marketable title.

Copyright American Land Title Association. All rights reserved.

The use of this Form (or any derivative thereof) is restricted to ALTA licensees and ALTA members in good standing as of the date of use. All other uses are prohibited. Reprinted under license from the American Land Title Association.

AMERICAN LAND TITLE ASSOCIATION

(continued)

2. CONTINUATION OF COVERAGE

This policy continues as of the Date of Policy in favor of an Insured, so long as the Insured:

a. retains an estate or interest in the Land;

b. owns an obligation secured by a purchase money Mortgage given by a purchaser from the Insured; or

c. has liability for warranties given by the Insured in any transfer or conveyance of the Insured's Title.

Except as provided in Condition 2, this policy terminates and ceases to have any further force or effect after the Insured conveys the Title. This policy does not continue in force or effect in favor of any person or entity that is not the Insured and acquires the Title or an obligation secured by a purchase money Mortgage given to the Insured.

3. NOTICE OF CLAIM TO BE GIVEN BY INSURED CLAIMANT

The Insured must notify the Company promptly in writing if the Insured has Knowledge of:

a. any litigation or other matter for which the Company may be liable under this policy; or

b. any rejection of the Title as Unmarketable Title.

If the Company is prejudiced by the failure of the Insured Claimant to provide prompt notice, the Company's liability to the Insured Claimant under this policy is reduced to the extent of the prejudice.

4. PROOF OF LOSS

The Company may, at its option, require as a condition of payment that the Insured Claimant furnish a signed proof of loss. The proof of loss must describe the defect, lien, encumbrance, adverse claim, or other matter insured against by this policy that constitutes the basis of loss or damage and must state, to the extent possible, the basis of calculating the amount of the loss or damage.

5. DEFENSE AND PROSECUTION OF ACTIONS

a. Upon written request by the Insured and subject to the options contained in Condition 7, the Company, at its own cost and without unreasonable delay, will provide for the defense of an Insured in litigation in which any third party asserts a claim covered by this policy adverse to the Insured. This obligation is limited to only those stated causes of action alleging matters insured against by this policy. The Company has the right to select counsel of its choice (subject to the right of the Insured to object for reasonable cause) to represent the Insured as to those covered causes of action. The Company is not liable for and will not pay the fees of any other counsel. The Company will not pay any fees, costs, or expenses incurred by the Insured in the defense of any cause of action that alleges matters not insured against by this policy.

b. The Company has the right, in addition to the options contained in Condition 7, at its own cost, to institute and prosecute any action or proceeding or to do any other act that, in its opinion, may be necessary or desirable to establish the Title, as insured, or to prevent or reduce loss or damage to the Insured. The Company may take any appropriate action under the terms of this policy, whether or not it is liable to the Insured. The Company's exercise of these rights is not an admission of liability or waiver of any provision of this policy. If the Company exercises its rights under Condition 5.b., it must do so diligently.

c. When the Company brings an action or asserts a defense as required or permitted by this policy, the Company may pursue the litigation to a final determination by a court having jurisdiction. The Company reserves the right, in its sole discretion, to appeal any adverse judgment or order.

6. DUTY OF INSURED CLAIMANT TO COOPERATE

a. When this policy permits or requires the Company to prosecute or provide for the defense of any action or proceeding and any appeals, the Insured will secure to the Company the right to prosecute or provide defense in the action or proceeding, including the right to use, at its option, the name of the Insured for this purpose.

When requested by the Company, the Insured, at the Company's expense, must give the Company all reasonable aid in:

i. securing evidence, obtaining witnesses, prosecuting or defending the action or proceeding, or effecting settlement; and

ii. any other lawful act that in the opinion of the Company may be necessary or desirable to establish the Title or any other matter, as insured.

If the Company is prejudiced by any failure of the Insured to furnish the required cooperation, the Company's liability and obligations to the Insured under this policy terminate, including any obligation to defend, prosecute, or continue any litigation, regarding the matter requiring such cooperation.

b. The Company may reasonably require the Insured Claimant to submit to examination under oath by any authorized representative of the Company and to produce for examination, inspection, and copying, at such reasonable times and places as may be designated by the authorized representative of the Company, all records, in whatever medium maintained, including books, ledgers, checks, memoranda, correspondence, reports, e-mails, disks, tapes, and videos, whether bearing a date before or after the Date of Policy, that reasonably pertain to the loss or damage. Further, if requested by any authorized representative of the Company, the Insured Claimant must grant its permission, in writing, for any authorized representative of the Company to examine, inspect, and copy all the records in the custody or control of a third party that reasonably pertain to the loss or damage. No information designated in writing as confidential by the Insured Claimant provided to the Company pursuant to Condition 6 will be later disclosed to others unless, in the reasonable judgment of the Company, disclosure is necessary in the administration of the claim or required by law. Any failure of the Insured Claimant to submit for examination under oath, produce any reasonably requested information, or grant permission to secure reasonably necessary information from third parties as required in Condition 6.b., unless prohibited by law, terminates any liability of the Company under this policy as to that claim.

7. OPTIONS TO PAY OR OTHERWISE SETTLE CLAIMS; TERMINATION OF LIABILITY

In case of a claim under this policy, the Company has the following additional options:

a. *To Pay or Tender Payment of the Amount of Insurance*

Copyright American Land Title Association. All rights reserved.

The use of this Form (or any derivative thereof) is restricted to ALTA licensees and ALTA members in good standing as of the date of use. All other uses are prohibited. Reprinted under license from the American Land Title Association.

(continued)

To pay or tender payment of the Amount of Insurance under this policy. In addition, the Company will pay any costs, attorneys' fees, and expenses incurred by the Insured Claimant that were authorized by the Company up to the time of payment or tender of payment and that the Company is obligated to pay.

Upon the exercise by the Company of this option provided for in Condition 7.a., the Company's liability and obligations to the Insured under this policy terminate, including any obligation to defend, prosecute, or continue any litigation.

b. *To Pay or Otherwise Settle with Parties other than the Insured or with the Insured Claimant*

i. To pay or otherwise settle with parties other than the Insured for or in the name of the Insured Claimant. In addition, the Company will pay any costs, attorneys' fees, and expenses incurred by the Insured Claimant that were authorized by the Company up to the time of payment and that the Company is obligated to pay; or

ii. To pay or otherwise settle with the Insured Claimant the loss or damage provided for under this policy. In addition, the Company will pay any costs, attorneys' fees, and expenses incurred by the Insured Claimant that were authorized by the Company up to the time of payment and that the Company is obligated to pay.

Upon the exercise by the Company of either option provided for in Condition 7.b., the Company's liability and obligations to the Insured under this policy for the claimed loss or damage terminate, including any obligation to defend, prosecute, or continue any litigation.

8. CONTRACT OF INDEMNITY; DETERMINATION AND EXTENT OF LIABILITY

This policy is a contract of indemnity against actual monetary loss or damage sustained or incurred by an Insured Claimant who has suffered loss or damage by reason of matters insured against by this policy. This policy is not an abstract of the Title, report of the condition of the Title, legal opinion, opinion of the Title, or other representation of the status of the Title. All claims asserted under this policy are based in contract and are restricted to the terms and provisions of this policy. The Company is not liable for any claim alleging negligence or negligent misrepresentation arising from or in connection with this policy or the determination of the insurability of the Title.

a. The extent of liability of the Company for loss or damage under this policy does not exceed the lesser of:

i. the Amount of Insurance; or

ii. the difference between the fair market value of the Title, as insured, and the fair market value of the Title subject to the matter insured against by this policy.

b. Except as provided in Condition 8.c. or 8.d., the fair market value of the Title in Condition 8.a.ii. is calculated using the date the Insured discovers the defect, lien, encumbrance, adverse claim, or other matter insured against by this policy.

c. If, at the Date of Policy, the Title to all of the Land is void by reason of a matter insured against by this policy, then the Insured Claimant may, by written notice given to the Company, elect to use the Date of Policy as the date for calculating the fair market value of the Title in Condition 8.a.ii.

d. If the Company pursues its rights under Condition 5.b. and is unsuccessful in establishing the Title, as insured:

i. the Amount of Insurance will be increased by Fifteen Percent (15%); and

ii. the Insured Claimant may, by written notice given to the Company, elect, as an alternative to the dates set forth in Condition 8.b. or, if it applies, 8.c., to use either the date the settlement, action, proceeding, or other act described in Condition 5.b. is concluded or the date the notice of claim required by Condition 3 is received by the Company as the date for calculating the fair market value of the Title in Condition 8.a.ii.

e. In addition to the extent of liability for loss or damage under Conditions 8.a. and 8.d., the Company will also pay the costs, attorneys' fees, and expenses incurred in accordance with Conditions 5 and 7.

9. LIMITATION OF LIABILITY

a. The Company fully performs its obligations and is not liable for any loss or damage caused to the Insured if the Company accomplishes any of the following in a reasonable manner:

i. removes the alleged defect, lien, encumbrance, adverse claim, or other matter;

ii. cures the lack of a right of access to and from the Land; or

iii. cures the claim of Unmarketable Title,

all as insured. The Company may do so by any method, including litigation and the completion of any appeals.

b. The Company is not liable for loss or damage arising out of any litigation, including litigation by the Company or with the Company's consent, until a State or federal court having jurisdiction makes a final, non-appealable determination adverse to the Title.

c. The Company is not liable for loss or damage to the Insured for liability voluntarily assumed by the Insured in settling any claim or suit without the prior written consent of the Company.

d. The Company is not liable for the content of the Transaction Identification Data, if any.

10. REDUCTION OR TERMINATION OF INSURANCE

All payments under this policy, except payments made for costs, attorneys' fees, and expenses, reduce the Amount of Insurance by the amount of the payment.

11. LIABILITY NONCUMULATIVE

The Amount of Insurance will be reduced by any amount the Company pays under any policy insuring a Mortgage to which exception is taken in Schedule B or to which the Insured has agreed, assumed, or taken subject, or which is executed by an Insured after the Date of Policy and which is a charge or lien on the Title, and the amount so paid will be deemed a payment to the Insured under this policy.

Copyright American Land Title Association. All rights reserved.

The use of this Form (or any derivative thereof) is restricted to ALTA licensees and ALTA members in good standing as of the date of use. All other uses are prohibited. Reprinted under license from the American Land Title Association.

(continued)

12. PAYMENT OF LOSS

When liability and the extent of loss or damage are determined in accordance with the Conditions, the Company will pay the loss or damage within thirty (30) days.

13. COMPANY'S RECOVERY AND SUBROGATION RIGHTS UPON SETTLEMENT AND PAYMENT

a. If the Company settles and pays a claim under this policy, it is subrogated and entitled to the rights and remedies of the Insured Claimant in the Title and all other rights and remedies in respect to the claim that the Insured Claimant has against any person, entity, or property to the fullest extent permitted by law, but limited to the amount of any loss, costs, attorneys' fees, and expenses paid by the Company. If requested by the Company, the Insured Claimant must execute documents to transfer these rights and remedies to the Company. The Insured Claimant permits the Company to sue, compromise, or settle in the name of the Insured Claimant and to use the name of the Insured Claimant in any transaction or litigation involving these rights and remedies.

b. If a payment on account of a claim does not fully cover the loss of the Insured Claimant, the Company defers the exercise of its subrogation right until after the Insured Claimant fully recovers its loss.

c. The Company's subrogation right includes the Insured's rights to indemnity, guaranty, warranty, insurance policy, or bond, despite any provision in those instruments that addresses recovery or subrogation rights.

14. POLICY ENTIRE CONTRACT

a. This policy together with all endorsements, if any, issued by the Company is the entire policy and contract between the Insured and the Company. In interpreting any provision of this policy, this policy will be construed as a whole. This policy and any endorsement to this policy may be evidenced by electronic means authorized by law.

b. Any amendment of this policy must be by a written endorsement issued by the Company. To the extent any term or provision of an endorsement is inconsistent with any term or provision of this policy, the term or provision of the endorsement controls. Unless the endorsement expressly states, it does not:

i. modify any prior endorsement,

ii. extend the Date of Policy,

iii. insure against loss or damage exceeding the Amount of Insurance, or

iv. increase the Amount of Insurance.

15. SEVERABILITY

In the event any provision of this policy, in whole or in part, is held invalid or unenforceable under applicable law, this policy will be deemed not to include that provision or the part held to be invalid, but all other provisions will remain in full force and effect.

16. CHOICE OF LAW AND CHOICE OF FORUM

a. *Choice of Law*

The Company has underwritten the risks covered by this policy and determined the premium charged in reliance upon the State law affecting interests in real property and the State law applicable to the interpretation, rights, remedies, or enforcement of policies of title insurance of the State where the Land is located.

The State law of the State where the Land is located, or to the extent it controls, federal law, will determine the validity of claims against the Title and the interpretation and enforcement of the terms of this policy, without regard to conflicts of law principles to determine the applicable law.

b. *Choice of Forum*

Any litigation or other proceeding brought by the Insured against the Company must be filed only in a State or federal court having jurisdiction.

17. NOTICES

Any notice of claim and any other notice or statement in writing required to be given to the Company under this policy must be given to the Company at:
Chicago Title Insurance Company
P.O. Box 45023
Jacksonville, FL 32232-5023
Attn: Claims Department

18. CLASS ACTION

ALL CLAIMS AND DISPUTES ARISING OUT OF OR RELATING TO THIS POLICY, INCLUDING ANY SERVICE OR OTHER MATTER IN CONNECTION WITH ISSUING THIS POLICY, ANY BREACH OF A POLICY PROVISION, OR ANY OTHER CLAIM OR DISPUTE ARISING OUT OF OR RELATING TO THE TRANSACTION GIVING RISE TO THIS POLICY, MUST BE BROUGHT IN AN INDIVIDUAL CAPACITY. NO PARTY MAY SERVE AS PLAINTIFF, CLASS MEMBER, OR PARTICIPANT IN ANY CLASS, REPRESENTATIVE, OR PRIVATE ATTORNEY GENERAL PROCEEDING.

Copyright American Land Title Association. All rights reserved.

The use of this Form (or any derivative thereof) is restricted to ALTA licensees and ALTA members in good standing as of the date of use. All other uses are prohibited. Reprinted under license from the American Land Title Association.

(continued)

19. ARBITRATION

a. All claims and disputes arising out of or relating to this policy, including any service or other matter in connection with issuing this policy, any breach of a policy provision, or any other claim or dispute arising out of or relating to the transaction giving rise to this policy, may be resolved by arbitration. If the Amount of Insurance is Two Million and No/100 Dollars ($2,000,000) or less, any claim or dispute may be submitted to binding arbitration at the election of either the Company or the Insured. If the Amount of Insurance is greater than Two Million and No/100 Dollars ($2,000,000), any claim or dispute may be submitted to binding arbitration only when agreed to by both the Company and the Insured. Arbitration must be conducted pursuant to the Title Insurance Arbitration Rules of the American Land Title Association ("ALTA Rules"). The ALTA Rules are available online at www.alta.org/arbitration. The ALTA Rules incorporate, as appropriate to a particular dispute, the Consumer Arbitration Rules and Commercial Arbitration Rules of the American Arbitration Association ("AAA Rules"). The AAA Rules are available online at www.adr.org.

b. ALL CLAIMS AND DISPUTES MUST BE BROUGHT IN AN INDIVIDUAL CAPACITY. NO PARTY MAY SERVE AS PLAINTIFF, CLASS MEMBER, OR PARTICIPANT IN ANY CLASS, REPRESENTATIVE, OR PRIVATE ATTORNEY GENERAL PROCEEDING IN ANY ARBITRATION GOVERNED BY CONDITION 19. The arbitrator does not have authority to conduct any class action arbitration, private attorney general arbitration, or arbitration involving joint or consolidated claims under any circumstance.

c. *If there is a final judicial determination that a request for particular relief cannot be arbitrated in accordance with this Condition 19, then only that request for particular relief may be brought in court. All other requests for relief remain subject to this Condition 19.*

d. Fees will be allocated in accordance with the applicable AAA Rules. The results of arbitration will be binding upon the parties. The arbitrator may consider, but is not bound by, rulings in prior arbitrations involving different parties. The arbitrator is bound by rulings in prior arbitrations involving the same parties to the extent required by law. The arbitrator must issue a written decision sufficient to explain the findings and conclusions on which the award is based. Judgment upon the award rendered by the arbitrator may be entered in any State or federal court having jurisdiction.

END OF CONDITIONS

Copyright American Land Title Association. All rights reserved.

The use of this Form (or any derivative thereof) is restricted to ALTA licensees and ALTA members in good standing as of the date of use. All other uses are prohibited. Reprinted under license from the American Land Title Association.

ENDORSEMENT - SE 287

POLICY MODIFICATION

Issued By:

CHICAGO TITLE INSURANCE COMPANY

Attached to Policy Number:

24GND629106NB

General Exception number(s) 1-7 of Schedule B of this policy are hereby deleted.

This endorsement is issued as part of the policy. Except as it expressly states, it does not (i) modify any of the terms and provisions of the policy, (ii) modify any prior endorsements, (iii) extend the Date of Policy, or (iv) increase the Amount of Insurance. To the extent a provision of the policy or a previous endorsement is inconsistent with an express provision of this endorsement, this endorsement controls. Otherwise, this endorsement is subject to all of the terms and provisions of the policy and of any prior endorsements.

Chicago Title Insurance Company

Dated: January 24, 2025

Your Property Tax Overview

TOTAL TAXING DISTRICT DEBT ATTRIBUTED TO YOUR PROPERTY

Total Taxing District Debt Attributed to Your Property:	**$28,277**
Property Value:	**$467,090**
Total Debt % Attributed to Your Property Value:	**6.1%**

To see the 20-Year History of Your Property Taxes, click here.

Note: The above amounts are illustrations of how much government debt could be attributed to your property based on its 2023 value.

See Details Here

OVERVIEW - PAYMENTS

Property Index Number (PIN): **04-07-407-001-0000**

BEGIN A NEW SEARCH

Scroll down for more information.

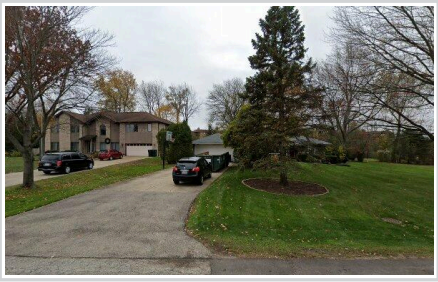

Incorrect Image? Click Here.

Property Location:
3803 OAK AVE
NORTHBROOK, IL 60062-4920

Volume: 131

Mailing Information:
ILYA GILMAN
255 NORTHGATE PKWY
WHEELING, IL 60090-2667

NOTICE: The U.S. Postal Service has returned our bills and notices! Please update the mailing information by clicking on this link.

Are Your Taxes Paid?

Tax Year 2023 (billed in 2024) Total Amount Billed: $9,297.71

1st INSTALLMENT - Tax Year 2023		2nd INSTALLMENT - Tax Year 2023	
Original Billed Amount:	$5,431.57	**Original Billed Amount:**	$3,866.14
Due Date:	03/01/2024	**Due Date:**	08/01/2024

Tax:	$0.00	**Tax:**	$0.00
Interest:	$0.00	**Interest:**	$0.00
Current Amount Due:	**$0.00**	**Current Amount Due:**	**$0.00**

Total Amount Due: **$0.00**

Expand Payment Details

Tax Year 2024 (billed in 2025) Total Amount Billed: $5,113.74

1st INSTALLMENT - Tax Year 2024

Original Billed Amount:	$5,113.74
Due Date:	03/04/2025
Tax:	$0.00
Interest:	$0.00
Current Amount Due:	**$0.00**

Total Amount Due: **$0.00**

Expand Payment Details

About payments: Payments are recorded the date they are received. They appear on the website about three business days later.

Download Your Tax Bill

Open a PDF of your tax bill that can be printed and used to pay in person or by mail.

Tax Year 2023 Second Installment **Due Thursday, August 1, 2024**

Tax Year 2024 First Installment **Due Tuesday, March 4, 2025**

Stop receiving your tax bill by mail.

Sign up for eBilling to receive future tax bills via email.

Are There Any Overpayments on Your PIN?

Our records do not indicate a refund available on the PIN you have entered.

Have You Received Your Exemptions in These Tax Years?

	2023	2022	2021	2020
Homeowner Exemption:	YES	YES	YES	YES
Senior Citizen Exemption:	YES	YES	YES	YES
Senior Freeze Exemption:	NO	NO	NO	NO
Returning Veteran Exemption:	NO	NO	NO	NO
Disabled Person Exemption:	NO	NO	NO	NO
Disabled Veteran Exemption:	NO	NO	NO	NO

Tax Year 2024 exemptions granted by the Assessor will be reflected on your Second Installment tax bill.

Apply for a missing exemption

20-Year Property Tax Bill History

Tax Year 2004:	$5,887.71
Tax Year 2023:	$9,297.71
Difference:	**+ $3,410.00**
Percent Change:	**+ 57.92%**

See your complete property tax history.

- Read "The Pappas Study" 20-Year Property Tax History
- See the Top 50 Largest Tax Increases since 2000 by Chicago ward and suburb
- Voter Turnout 2011-2020 Chicago and Cook County Suburbs
- Cook County Suburbs - Interactive Map
- Chicago by Ward - Interactive Map

Taxing District Debt Attributed to Your Property

Total Taxing District Debt Attributed to Your Property: **$28,277**

Property Value: **$467,090**

Total Debt % Attributed to Your Property Value: **6.1%**

To see the 20-Year History of Your Property Taxes, click here.

Note: The above amounts are illustrations of how much government debt could be attributed to your property based on its 2023 value.

Select a taxing district name for detailed financial data.

Your Taxing Districts	Total Debts and Liabilities	District Property Value	Property Value	% of Taxing District Debt	Estimated Total Debts and Liabilities to Property

Northwest Mosquito Abatement Wheeling	$833,004	$99,462,645,968	$467,090	0.0004696%	$4
Mission Brook Sanitary Dist (Northbrook)	$73,152	$924,994,502	$467,090	0.0504965%	$37
Metro Water Reclamation Dist of Chicago	$4,681,319,000	$615,525,376,003	$467,090	0.0000759%	$3,552
Northbrook Rural Fire District	$4,552,714	$1,155,946,654	$467,090	0.0404076%	$1,840
Northbrook Park District	$40,344,653	$9,338,615,326	$467,090	0.0050017%	$2,018
Oakton College Dist Skokie Des Plaines	$110,616,164	$92,676,578,865	$467,090	0.0005040%	$558
Glenbrook HS District 225 (Glenview)	$124,383,503	$21,791,642,799	$467,090	0.0021434%	$2,666
Northbrook School District 27	$9,507,286	$3,022,092,276	$467,090	0.0154558%	$1,469
Town of Northfield	$536,477	$22,544,537,297	$467,090	0.0020719%	$11
Cook County Forest Preserve District	$548,552,253	$627,061,316,173	$467,090	0.0000745%	$409
County of Cook	$21,094,656,928	$627,061,316,173	$467,090	0.0000745%	$15,713
				Total Taxing District Debt Attributed to Your Property:	$28,277

To read Treasurer Pappas' Debt Study and use the interactive map, click here.

Highlights of Your Taxing Districts' Debt and Pension

Select a taxing district name for detailed financial data.

Your Taxing Districts	Money Owed by Your Taxing Districts (minus Total Net Pension Liability)	Pension and Healthcare Amounts Promised by Your Taxing Districts	Amount of Pension and Healthcare Shortage	Employees	Retirees	Difference
Northwest Mosquito Abatement Wheeling	$455,316	$8,630,076	$461,013	19	8	11
Mission Brook Sanitary Dist (Northbrook)	$73,152	$0	$0	3	0	3
Metro Water Reclamation Dist of Chicago	$3,126,243,000	$3,151,727,000	$1,449,923,000	1,966	2,454	-488
Northbrook Rural Fire District	$4,552,714	$0	$0	0	0	0
Northbrook Park District	$39,302,961	$39,105,697	($359,939)	185	543	-358
Oakton College Dist Skokie Des Plaines	$110,616,164	$15,817,022	$0	836	0	836
Glenbrook HS District 225 (Glenview)	$109,647,178	$75,088,588	$7,072,470	850	338	512
Northbrook School District 27	$7,347,207	$18,927,838	$2,391,503	210	428	-218
Town of Northfield	$455,737	$7,843,577	$80,740	20	22	-2
Cook County Forest Preserve District	$214,441,242	$617,834,550	$382,643,760	625	536	89
County of Cook	$8,262,580,154	$26,512,006,772	$14,493,276,944	23,760	20,138	3,622

Reports and Data for All Taxing Districts

View the financial reports filed by 547 local Taxing Districts across Cook County pursuant to the Debt Disclosure Ordinance authored by Treasurer Maria Pappas.

- Read the Executive Summary
- Read the Debt Report
- Cook County Debt Map
- Correlation Chart Between Debt and Higher Taxes
- Search your property to find out what portion of local government debt is attributed to your property
- Debt to Property Value by Municipality - Residential and Commercial
- Debt and Disclosure Data
- Browse all financial reports filed by a specific local government

BEGIN A NEW SEARCH

DISCLAIMER: The information on this screen comes from many sources, few of which are in the control of the Cook County Treasurer's Office. Taxpayers are advised to take personal responsibility for their PIN, property location, taxpayer address, and payment amounts posted due or paid, to be sure of their accuracy.

BrowseAloud

PLAT OF TOPOGRAPHY

OF

LOT 14 IN BLOCK 3 IN ARTHUR T. McINTOSH AND CO'S MISSION HILLS ESTATES, BEING A SUBDIVISION OF THE SOUTH 1/2 OF THE SOUTHEAST 1/4 AND THAT PART OF THE SOUTH 1/2 OF THE SOUTHWEST 1/4 WHICH LIES EAST OF SANDERS ROAD IN SECTION 7, TOWNSHIP 42 NORTH, RANGE 12, EAST OF THE THIRD PRINCIPAL MERIDIAN, IN COOK COUNTY, ILLINOIS.

TOTAL LAND AREA: 30,678 SQ.FT.

COMMONLY KNOWN AS: 3803 OAK AVENUE, NORTHBROOK, ILLINOIS 60062

SCALE: 1 INCH = 15 FEET

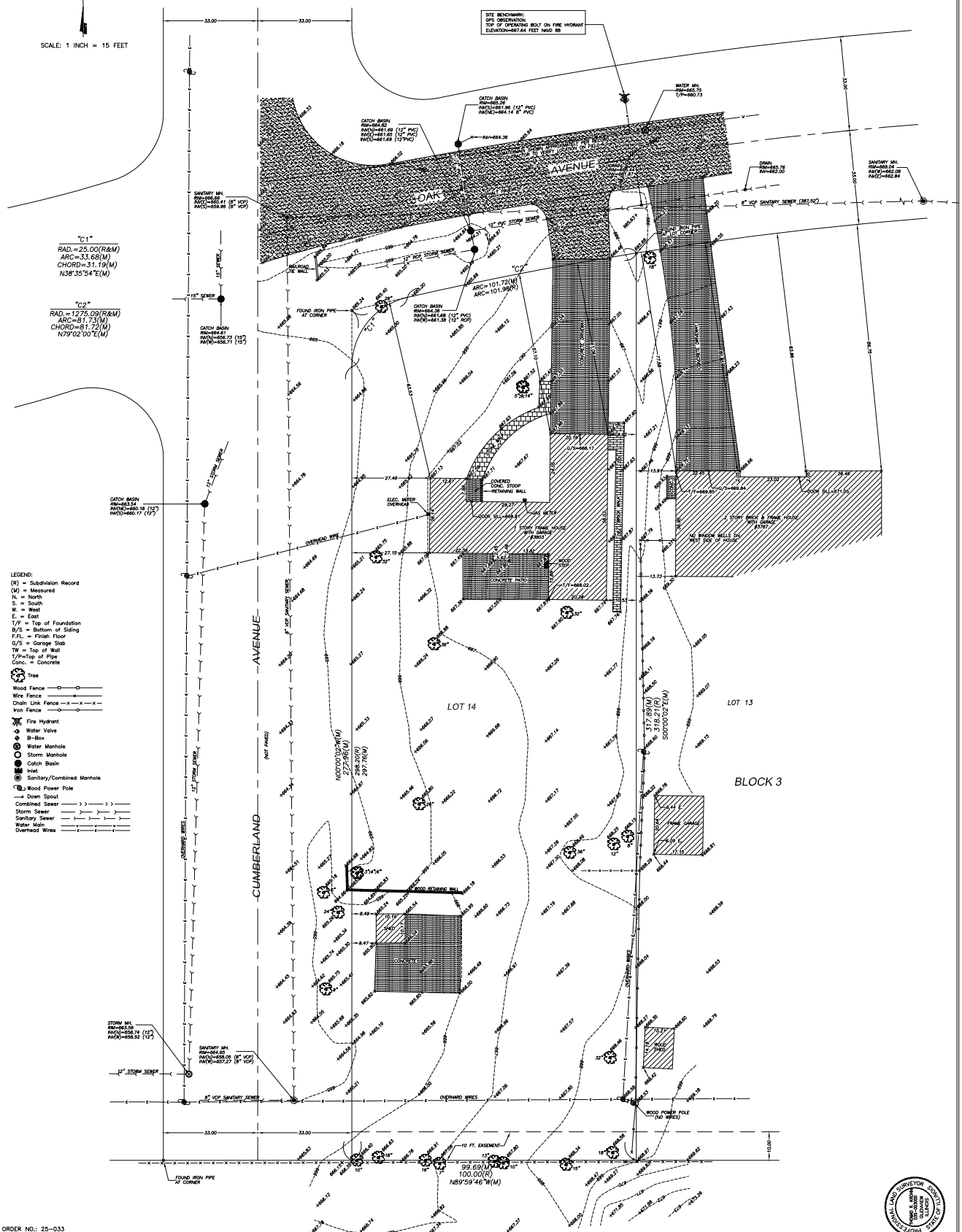

LEGEND:
(R) = Subdivision Record
(M) = Measured
N. = North
S. = South
W. = West
E. = East
T/F = Top of Foundation
B/S = Bottom of Siding
F.F.L. = Finish Floor
G/S = Garage Slab
TW = Top of Wall
T/P=Top of Pipe
Conc. = Concrete
Tree
Wood Fence
Wire Fence
Chain Link Fence
Iron Fence
Fire Hydrant
Water Valve
B-Box
Water Manhole
Storm Manhole
Catch Basin
Inlet
Sanitary/Combined Manhole
Wood Power Pole
Down Spout
Combined Sewer
Storm Sewer
Sanitary Sewer
Water Main
Overhead Wires

ORDER NO.: 25-033
ORDERED BY: LUKAVEN DEVELOPMENT LLC

PREPARED BY:
GEODETIC SURVEY, LTD.
PROFESSIONAL DESIGN FIRM NO. 184-004394
CONSTRUCTION AND LAND SURVEYORS
200 WAUKEGAN ROAD, GLENVIEW, IL 60025
TEL. (847) 904-7690 FAX (847) 904-7691
info@gsurvey.net www.gslandsurveying.com

NOTE: Location of underground utilities and sewer size where not substantiated by physical evidence are taken from records normally considered reliable. No responsibility for their accuracy is assumed by the surveyor.

Locations of existing utility services are based on visual observations. Contractor must confirm location and condition of all utility services to remain.

FOR LOCATION OF BURIED CABLE, CALL J.U.L.I.E. ☎1-800-892-0123 BEFORE DIGGING

GENERAL NOTES:
-FOR EASEMENTS, BUILDING LINES AND OTHER RESTRICTIONS NOT SHOWN ON THE PLAT OF SURVEY REFER TO YOUR ABSTRACT, DEED, TITLE POLICY, CONTRACT AND LOCAL BUILDING LINE/SETBACK REGULATIONS.
-COMPARE ALL POINTS BEFORE BUILDING AND AT ONCE REPORT ANY DISCREPANCIES, WHICH YOU MAY HAVE FOUND, TO THIS OFFICE, BEFORE DAMAGE IS DONE.
-DIMENSIONS ARE SHOWN IN FEET AND DECIMALS AND ARE NOT TO BE ASSUMED FROM SCALING.
-BEARINGS ARE REFERRED TO AN ASSUMED MERIDIAN AND ARE USED TO DENOTE ANGLES ONLY.
-THE LEGAL DESCRIPTION NOTED ON THIS PLAT WAS PROVIDED BY THE CLIENT AND FOR ACCURACY SHOULD BE COMPARED WITH DEED AND/OR TITLE INSURANCE POLICY.

STATE OF ILLINOIS SS
COUNTY OF COOK

I HEREBY CERTIFY THAT THIS PLAT WAS PREPARED UNDER MY DIRECT SUPERVISION AND THAT I AM A DULY LICENSED LAND SURVEYOR UNDER THE LAWS OF THE STATE OF ILLINOIS.

FIELD WORK COMPLETED: MARCH 21, 2025

DATED THIS 27th DAY OF MARCH, 2025.

BY: _____
PROFESSIONAL ILLINOIS LAND SURVEYOR NO.3000
LICENSE EXPIRES 11/30/2026

PROFESSIONAL LAND SURVEYOR QUALITY SERVICE STATE OF ILLINOIS

NEW RESIDENCE FOR:

PRIVATE OWNER

3803 OAK AVE
NORTHBROOK, IL

GENERAL NOTES

1 INCLUDED AS PART OF THESE DOCUMENTS IS THE "GENERAL CONDITIONS FOR CONSTRUCTION", AIA DOCUMENT A-201, ARTICLE 1 THROUGH 14 INCLUSIVE.

2 THESE DRAWINGS INDICATE THE GENERAL SCOPE OF THE PROJECT IN TERMS OF THE ARCHITECTURAL DESIGN CONCEPT, DIMENSIONS, MAJOR ELEMENTS AND MATERIALS. THESE DRAWINGS DO NOT NECESSARILY INDICATE OR DESCRIBE ALL WORK REQUIRED FOR THE FULL COMPLETION OF THE PROJECT.

3 THE GENERAL CONTRACTOR AND HIS SUB-CONTRACTORS SHALL FURNISH ALL OF THOSE ITEMS AND LABOR REQUIRED FOR THE FULL COMPLETION OF THIS PROJECT IN A FIRST CLASS WORKMANSHIP LIKE MANNER.

4 THE CONTRACTOR SHALL BE HELD RESPONSIBLE FOR FIELD VERIFICATION OF ALL DIMENSIONS AND CONDITIONS BEFORE EXECUTION OF ANY WORK AND SHALL REPORT ANY DISCREPANCIES TO THE ARCHITECT IN WRITING.

5 THE CONTRACTOR SHALL BE HELD RESPONSIBLE FOR THE ADHERENCE TO COMPLY WITH ALL APPLICABLE CITY, STATE, AND NATIONAL CODES AND ORDINANCES.

6 THE CONTRACTOR SHALL VERIFY ALL PARTITION LAYOUTS WITH THE ARCHITECT BEFORE PROCEEDING WITH ANY FRAMING.

7 THE CONTRACTOR SHALL BE RESPONSIBLE FOR THE COORDINATION OF ALL INCOMING UTILITIES.

8 WRITTEN DIMENSIONS HOLD PREFERENCE OVER SCALED DIMENSIONS. DO NOT SCALE DRAWINGS.

9 THE GENERAL CONTRACTOR AND SUB-CONTRACTORS SHALL:
A. COMPLY WITH ALL LOCAL, STATE AND NATIONAL CODES AND ORDINANCES.
B. PERFORM ALL WORK IN A FIRST CLASS WORKMANSHIP LIKE MANNER AND IN NO WAY DAMAGE OR WEAKEN THE STRUCTURAL ELEMENTS OF THE BUILDING.
C. REMAIN RESPONSIBLE FOR COMPLIANCE WITH THE PROVISIONS OF THE OCCUPATIONAL SAFETY AND HEALTH ACT, (OSHA) LATEST ADDITION.
D. ALL WORK SHALL BE GUARANTEED FOR ONE YEAR AFTER SUBMITTAL OF COMPLETION OF WORK.
E. MAINTAIN THROUGHOUT THE CONSTRUCTION PERIOD, A CERTIFICATE OF INSURANCE FOR ALL LIABILITIES, WITH A HOLD HARMLESS CLAUSE, PROTECTING THE OWNER AND ARCHITECT.

10 THE GENERAL CONTRACTOR'S SUB-CONTRACTORS SHALL COMPLETELY HOOK-UP AND CONNECT ALL EQUIPMENT AND FURNISH ALL NECESSARY APPENDAGES.

11 ALL WINDOW GLASS, MIRRORS, FLOORS AND WALL TILE SHALL BE CLEANED AND WASHED UPON COMPLETION OF THE PROJECT BY THE GENERAL CONTRACTOR.

12 THE PREMISES SHALL BE KEPT IN A BROOM SWEPT FINISH CONDITION DURING ALL PHASES OF CONSTRUCTION. (ALL CONTRACTORS AND SUB-CONTRACTORS SHALL BE RESPONSIBLE FOR CLEANING UP AND DISPOSING OF THEIR LITTER AND LEFT OVER MATERIALS ON A REGULAR BASIS, AND LEAVE THE PROJECT IN A BROOM SWEPT FINISH CONDITION UPON COMPLETION OF THEIR PORTION OF THE PROJECT).

13 THE ENTIRE INSTALLATION SHALL BE PERFORMED IN A FIRST CLASS WORKMANSHIP LIKE MANNER. THE COMPLETED SYSTEMS SHALL BE FULLY OPERATIONAL. ACCEPTANCE BY THE OWNER SHALL BE A CONDITION OF THE CONTRACT.

GENERAL NOTES

14 ALL WORK SHALL BE COORDINATED WITH ALL OTHER TRADES IN ORDER TO AVOID INTERFERENCE, PRESERVE MAXIMUM HEAD ROOM, AND AVOID OMISSIONS.

15 ALL WORK PERFORMED MUST COMPLY WITH THE COOK COUNTY MUNICIPAL CODE.

16 THE GENERAL CONTRACTOR SHALL PROVIDE TEMPORARY FENCING AND BARRICADES AROUND THE ENTIRE SITE TO BE PROTECTED AND AT ANY INTERIOR FLOOR OPENINGS THAT MIGHT CAUSE A HAZARD TO ALL.

17 ALL CONTRACTORS AND THEIR REPRESENTATIVES WORKING ON THIS PROJECT SHALL AT ALL TIMES PRIOR AND DURING THE COURSE OF THEIR ACTIVITY BE RESPONSIBLE FOR THE SAFETY OF THEIR EMPLOYEES, AS WELL AS OTHERS AND IN THE CARE OF THE PROPERTY. EACH AS REPRESENTATIVES OF THEIR EMPLOYEES SHALL ASCERTAIN THAT THE CONDITIONS UNDER WHICH THEY WILL BE REQUIRED TO ACCOMPLISH THEIR WORK ARE SAFE WITHIN GOOD SAFETY PRACTICES AND MEET ALL CONCERNED REGULATIONS OF THE OCCUPATIONAL SAFETY AND HEALTH ACT OR OTHER GOVERNING REGULATIONS. THE BEGINNING OF WORK BY A CONTRACTOR SHALL INDICATE SATISFACTION CONCERNING SAFETY AND FULL RESPONSIBILITY FOR ACCIDENTS OR DAMAGE. IF UNSATISFIED, THE CONTRACTOR SHALL INDICATE WHAT SO EVER ACTIONS OR DEVICES NECESSARY TO RENDER SAFETY CONDITIONS FOR LIFE AND PROPERTY AS ARE RELATED TO THEIR ACTIVITY. IF THE WORK OF OTHER PARTIES OUTSIDE OF THEIR ORGANIZATION IS UPON INSPECTION FOUND AT ANY TIME TO BE UNSAFE, THEY SHALL STOP WORK IMMEDIATELY AND NOTIFY THE GENERAL CONTRACTOR, ARCHITECT AND OWNER. THE BEGINNING OF WORK SHALL INDICATE SATISFACTION. ACCEPTANCE OF A CONTRACT SHALL INDICATE ACCEPTANCE OF THESE REQUIREMENTS.

18 THE ARCHITECT ASSUMES NO RESPONSIBILITY FOR CONSTRUCTION OTHER THAN SHOWN ON THESE DRAWINGS.

19 INTERIOR FINISHES SHALL NOT EXCEED CLASS 1, 0-25 FLAME SPREAD, 200 SMOKE.

20 THIS SET OF PLANS IS PROTECTED UNDER UNITED STATES GOVERNMENT COPYRIGHT LAWS AND MAY NOT BE REPRODUCED, REPRINTED OR COPIED IN ANY MANNER, EXCEPT BY APPROVAL OF ARCHITECT IN WRITING. ANY PERSON OR FIRM KNOWINGLY REPRODUCING, REPRINTING OR PHOTOCOPYING ANY OF THIS WORK SHALL BE SUBJECT TO LAWSUITS AND SUCH PENALTIES AS THE LAW ALLOWS.

21 GENERAL CONTRACTOR SHALL OBTAIN SOILS REPORT BY GEOTECHNICAL ENGINEER LISTING SOIL BEARING CAPACITY. REPORT SHALL BE SUBMITTED TO ARCHITECT AND AUTHORITY HAVING JURISDICTION PRIOR TO CONCRETE PLACEMENT. SOILS REPORT SHALL BE AVAILABLE ON-SITE DURING FOOTING INSPECTION.

22 GENERAL CONTRACTOR SHALL OBTAIN SPOT FOUNDATION SURVEY BY LICENSED SURVEYOR AND SHALL SUBMIT SURVEY TO AUTHORITY HAVING JURISDICTION PRIOR TO ANY FRAMING.

23 APPROVED BUILDING PLANS SHALL BE AVAILABLE ON-SITE FOR ALL INSPECTIONS.

24 ROOF TRUSSES SHALL BE A DEFERRED SUBMITTAL. ARCHITECT OF RECORD TO REVIEW AND APPROVE ROOF TRUSS SHOP DRAWINGS PRIOR TO INSTALLATION. APPROVED SHOP DRAWINGS SHALL BE PROVIDED TO AHJ PRIOR TO INSTALLATION.

ENERGY CODE NOTES

1 ENERGY CODE COMPLIANCE DESIGN BY PRESCRIPTIVE
CLIMATE ZONE: 5
MAX. GLAZING U-FACTOR: 0.30
ACTUAL U-FACTOR: 0.30
MAX. SKYLIGHT U-FACTOR: 0.55
ACTUAL SKYLIGHT U-FACTOR: 0.55
SHGC: 0.40
MIN. CEILING R-VALUE: 49
ACTUAL CEILING R-VALUE: 49 (BATT)
MIN. FRAME WALL R-VALUE: 30 OR 20 + 5
ACTUAL WALL R-VALUE: 30 (SPRAY FOAM)
MIN. FLOOR R-VALUE: 30
ACTUAL FLOOR R-VALUE: N/A
MIN. BASEMENT R-VALUE: 15/19
ACTUAL BASEMENT R-VALUE: 20

GC TO PROVIDE PERMANENT CERTIFICATE TO BE POSTED ADJACENT TO ELECTRICAL PANEL INDICATING INSULATION AND ENERGY VALUES FOR BUILDING INSULATION, FENESTRATION AND DUCT SYSTEMS.

SPRAY FOAM BOX SILLS AND SILL PLATES, AND ADD R-15 HIGH DENSITY FRICTION FIT BATT INSULATION.

2 ALL PENETRATIONS THROUGH THERMAL ENVELOPE SHALL BE ADEQUATELY SEALED BY CAULK, GASKET, WEATHERSTRIPPING OR OTHER BARRIER MEANS PER 2021 IECC REQUIREMENTS.

ALL WINDOWS AND EXTERIOR DOOR JAMBS ARE TO BE SEALED WITH LOW-EXPANSION FOAM.

ALL BOTTOM PLATES ON EXTERIOR WALLS SHALL BE GLUED TO SUB-FLOOR.

3 ALL FIREPLACES SHALL HAVE GASKETED DOORS & OUTSIDE COMBUSTION AIR.

ENERGY CODE NOTES

4 ALL RECESSED LIGHTING IN THERMAL ENVELOPE SHALL BE SEALED TO PREVENT AIR LEAKAGE. ALL RECESSED DOWNLIGHTING TO BE IC-RATED.

5 PROVIDE PROGRAMMABLE THERMOSTATS FOR EACH ZONE WITH SETBACK AND MANUAL OVERRIDE.

6 ALL DUCTWORK SHALL BE ADEQUATELY SEALED. ALL SUPPLY DUCTWORK IN UNCONDITIONED ATTIC TO HAVE R-8 INSULATION. ALLOTHER DUCTWORK TO HAVE R-6 INSULATION. HVAC CONTRACTOR SHALL PROVIDE EITHER POST-CONSTRUCTION OR ROUGH-IN TEST OF TOTAL AIR LEAKAGE FOR DUCT SYSTEMS.

7 ALL MECHANICAL SYSTEM PIPING CAPABLE OF CARRYING FLUIDS ABOVE 105 DEG F OR BELOW 55 DEG F SHALL BE INSULATED TO A MINIMUM OF R-3. ALL HOT WATER LINES TO HAVE R-3 PIPE INSULATION & MANUAL SWITCH FOR RECIRC. PUMP.

8 ALL ACCESS HATCHES/DOORS TO UNCONDITIONED SPACE SHALL BE INSULATED & WEATHERSTRIPPED.

9 ALL LIGHTING TO HAVE HIGH-EFFICACY BULBS.

10 FURNACE: +95% AFUE
WATER HEATER: +95% AFUE
A/C: 16+ SEER

11 WINDOWS, SKYLIGHTS AND SLIDING GLASS DOORS SHALL HAVE AN AIR INFILTRATION RATE NO MORE THAN 0.3 CFM PER SF, AND SWINGING DOORS NO MORE THAN 0.5 CFM PER SF.

PROJECT DATA

PROJECT LOCATION: 3803 OAK AVE, NORTHBROOK, IL

ZONING DISTRICT: R-4
LOT AREA: 30,825 SF
PIN: ???

MAX LOT COVERAGE: 35% (10,788 SF)

PROPOSED LOT COVERAGE
BLDG FOOTPRINT: 3,647 SF
FRONT WALK: 206 SF
REAR PORCH: 320 SF
REAR PATIO: 877 SF
DRIVEWAY: 3,237 SF

TOTAL IMP. COVERAGE: 8,287 SF

MAX FLOOR AREA RATIO: 0.25 (7,706 SF)

ACTUAL BUILDING SIZE:
1ST FLOOR: 2,823 SF (INCLUDES POOL)
2ND FLOOR: 2,258 SF (INCLUDES DBL HT SPACES)

TOTAL BUILDING SIZE: 5,081 SF

MAX BUILDING HEIGHT: 35 FEET

PROPOSED HEIGHT: 35 FEET

APPLICABLE BUILDING CODES:
2021 INTERNATIONAL RESIDENTIAL CODE
2014 COOK COUNTY ELECTRICAL CODE
2014 ILLINOIS STATE PLUMBING CODE
2021 INTERNATIONAL ENERGY CONS. CODE
2021 INTERNATIONAL MECHANICAL CODE
2021 INTERNATIONAL FUEL GAS CODE
ALL AS AMENDED
COOK COUNTY MUNICIPAL CODE
COOK COUNTY ZONING ORDINANCE

SCOPE OF WORK

SCOPE OF WORK LIMITED TO THE FOLLOWING:
- NEW SINGLE FAMILY RESIDENCE WITH ATTACHED GARAGE AND ATTACHED ENCLOSED POOL, REAR TERRACE AND DRIVEWAY



THOMAS ARCHITECTS
2800 S RIVER RD, #305
DES PLAINES, IL 60018
O: 847.235.6815
THOMAS @ THOMASARCH.COM

SHEET INDEX

A-0.0	TITLE SHEET
A-0.1	SITE PLAN
A-0.2	WALL / FLOOR / ROOF ASSEMBLY DETAILS
A-2.1	BASEMENT PLAN
A-2.2	FIRST FLOOR PLAN
A-2.2A	FIRST FLOOR PLAN - POOL
A-2.4	SECOND FLOOR PLAN
A-2.5	ROOF PLAN - SCHEDULES
A-2.6	REFLECTED CEILING PLANS
A-3.0	BUILDING ELEVATIONS
A-3.1	BUILDING ELEVATIONS
A-3.2	ENLARGED BUILDING ELEVATIONS / DETAILS
A-4.0	BUILDING SECTIONS
A-4.1	BUILDING SECTIONS
A-5.0	WALL SECTIONS
A-5.1	WALL SECTIONS
A-5.3	SECTIONS DETAILS
A-9.0	FOUNDATION PLAN
A-9.1	FIRST FLOOR FRAMING PLAN
A-9.2	SECOND FLOOR FRAMING PLAN
A-9.3	ROOF FRAMING PLAN
A-9.4	LATERAL BRACE DIAGRAMS
E-1.0	ELECTRICAL PLANS
E-1.1	ELECTRICAL PLANS
E-1.2	ELECTRICAL PLANS
M-1.0	MECHANICAL PLANS
M-1.1	MECHANICAL PLANS
M-1.2	MECHANICAL PLANS
M-1.3	MECHANICAL NOTES / SCHEDULES / DIAGRAMS
M-2.1	MECHANICAL PLAN - POOL
M-2.2	MECHANICAL SCHEDULES / DETAILS - POOL
P-1.0	PLUMBING NOTES - DIAGRAMS

CERTIFICATION

THIS IS TO CERTIFY THAT THESE DRAWINGS WERE PREPARED UNDER MY DIRECT SUPERVISION AND ARE CORRECT TO THE BEST OF MY KNOWLEDGE IN ACCORDANCE WITH THE BUILDING CODES AND ORDINANCES OF COOK COUNTY

DATE 04/28/2025

IL LIC. NO. 001-019213
EXP. DATE: 11/30/2026

THOMAS BUDZIK 001-019213 STATE OF ILLINOIS

No.	Description	Date
1	ISSUE FOR PERMIT	04.28.2025
2	PERMIT REVISIONS	06.17.2025

Project Name and Address

PRIVATE OWNER
NEW RESIDENCE

3803 OAK AVE
NORTHBROOK, IL

Project No. 24-095

Description TITLE SHEET

Sheet A-0.0

C:\Users\Thomas\Documents\24095_3803 Oak_tharch.rvt

509

ABBREVIATION LEGEND

AC	ACOUSTICAL
ACC	ACCESSORY
AL	ALUMINUM
ALT	ALTERNATE
ANN	ANNUNCIATOR
ANOD	ANODIZED
APPL	APPLIANCE
ARCH	ARCHITECTURAL
AUTO	AUTOMATIC
AVG	AVERAGE
BD	BOARD
BLDG	BUILDING
BLKG	BLOCKING
CAB	CABINET
CLG	CEILING
CMU	CONCRETE MASONRY UNIT
CONC	CONCRETE
CONT	CONTINUOUS
CPT	CARPET
DBL	DOUBLE
DEPT	DEPARTMENT
DET	DETAIL
DIA	DIAMETER
DIV	DIVISION
DN	DOWN
DR	DOOR
ELEC	ELECTRICAL
ENTR	ENTRANCE
EQ	EQUAL
EQUIP	EQUIPMENT
EX	EXISTING
EXT	EXTERIOR
FAB	FABRICATION
FD	FLOOD DRAIN
FE	FIRE EXTINGUISHER
FEC	FIRE EXTINGUISHER CABINET
FIN	FINISH
FL	FLOOR (ING)
FR	FIRE RATED
FURN	FURNITURE
GA	GUAGE
GL	GROUND LEVEL
GR	GRADE(ING)
GYP	GYPSUM
HD	HEAD
HDWD	HARDWOOD
HDWR	HARDWARE
HM	HOLLOW METAL
HOR	HORIZONTAL
INFLTR	INFILTRATION
INFO	INFORMATION
INSUL	INSULATION
INT	INTERIOR
JAN	JANITOR
KIT	KITCHEN
LAV	LAVATORY
LB	POUND
LT	LIGHT

ABBREVIATION LEGEND

LVR	LOUVER
MAX	MAXIMUM
MECH	MECHANICAL
MEZZ	MEZZANINE
MFD	MANUFACTURED
MFR	MANFACTURER
MIN	MINIMUM
MISC	MISCELLANEOUS
MLWK	MILLWORK
MT	MOUNT
MTL	METAL
NIC	NOT IN CONTRACT
NTS	NOT TO SCALE
OPNG	OPENING
OVFL	OVERFLOW
OVHD	OVERHEAD
PLAM	PLASTIC LAMINATE
PLAS	PLASTER
PLSTC	PLASTIC
PLYWD	PLYWOOD
PNL	PANEL
PR	POWDER ROOM
PREFAB	PREFABRICATED
PREFIN	PREFINISHED
PROT	PROTECTION
RDR	READER
REF	REFERENCE
REINF	REINFORCED
REQD	REQUIRED
RES	RESISTANT
RESIL	RESILIANT
RF	REFRIGERATOR
RM	ROOM
RO	ROUGH OPENING
SEC	SECURITY
SF	SQUARE FEET
SGL	SINGLE
SIM	SIMILAR
SST	STAINLESS STEEL
STD	STANDARD
STL	STEEL
SURF	SURFACE
SUSP	SUSPENDED
SYS	SYSTEM(S)
THK	THICK
TLT	TOILET
TRANS	TRANSPARENT
TRTD	TREATED
TSS	TAPE, SAND AND SEAL
TYP	TYPICAL
UNO	UNLESS NOTED OTHERWISE
UTIL	UTILITY
VEH	VEHICLE
VERT	VERTICAL
VIF	VERIFY IN FIELD
W/	WITH
W/O	WITHOUT
WC	WATER CLOSET
WDW	WINDOW
WRB	WEATHER RESISTANT BARRIER

ANNOTATION LEGEND

- DETAIL CALLOUT
- INTERIOR ELEVATION CALLOUT
- EXTERIOR ELEVATION CALLOUT
- SECTION CALLOUT
- DOOR TAG
- WINDOW TAG
- WALL TAG
- KEYNOTE
- FIXTURE / EQUIPMENT TAG

DIMENSIONING NOTES

1. ALL FLOOR PLANS ARE DIMENSIONED TO EXTERIOR FACE OF STUD OR EXTERIOR FACE OF BRICK VENEER AT EXTERIOR WALLS, U.N.O.
2. ALL FLOOR PLANS ARE DIMENSIONED TO THE FACE OF STUD AT ALL INTERIOR WALLS, U.N.O.
3. ALL ROOF OVERHANG DIMENSIONS ARE TO THE EXTERIOR FACE OF THE EXTERIOR WALL STUD, U.N.O.

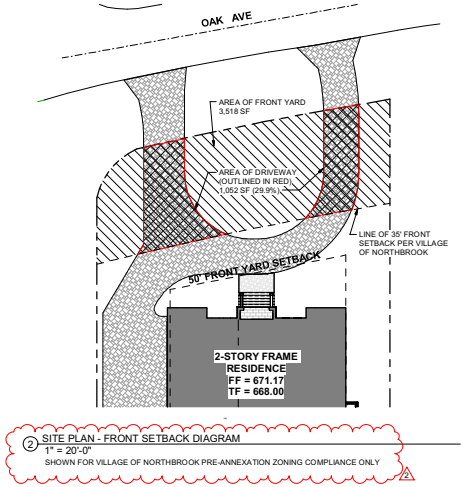

2 SITE PLAN - FRONT SETBACK DIAGRAM
1" = 20'-0"
SHOWN FOR VILLAGE OF NORTHBROOK PRE-ANNEXATION ZONING COMPLIANCE ONLY

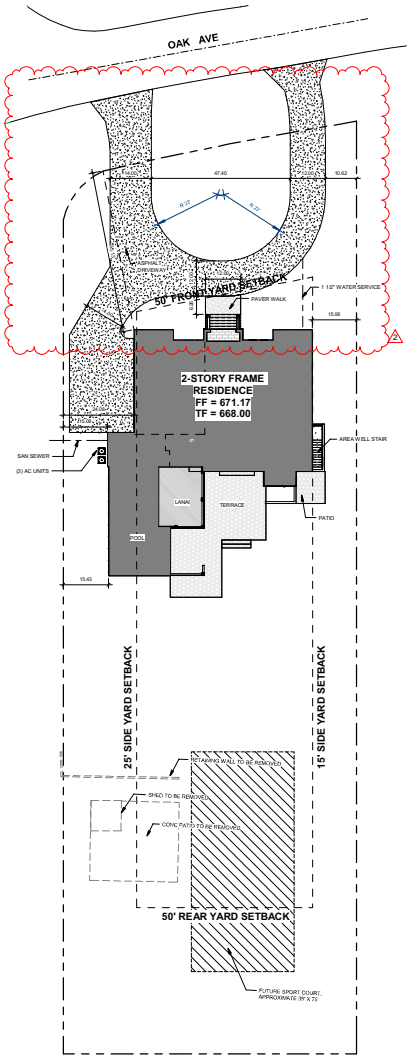

1 SITE PLAN
1" = 20'-0"

SITE NOTES

1. SEE CIVIL ENGINEERING DRAWINGS FOR ALL SANITARY, STORM, WATER & OTHER UTILITIES.
2. GENERAL CONTRACTOR TO KEEP CONSTRUCTION SITE FREE OF EXCESSIVE CONSTRUCTION DEBRIS AT ALL TIMES.
3. GENERAL CONTRACTOR TO PROVIDE CONSTRUCTION & SILT FENCING PER NORTHBROOK REQUIREMENTS.
   SEE CIVIL ENGINEERING DRAWINGS.
4. GENERAL CONTRACTOR TO PROVIDE ON-SITE PORT-O-POTTY.
5. SITE INSPECTION REQUIRED PRIOR TO COMMENCEMENT OF ANY CONSTRUCTION OR DEMOLITION WORK.
6. ALL DOWNSPOUTS SHALL SPLASH AT GRADE, BE DIRECTED TOWARD THE FRONT OR REAR OF THE HOUSE, NOT DISCHARGE MORE THAN 10' FROM THE PROPERTY LINE AND NOT DIRECTLY CONNECT TO THE STORM SEWER.

THOMAS ARCHITECTS
2800 S RIVER RD, #305
DES PLAINES, IL 60018
O: 847.235.6815
THOMAS @ THOMASARCH.COM

THOMAS BUDZIK 001-010213

No.	Description	Date
1	ISSUE FOR PERMIT	04.28.2025
2	PERMIT REVISIONS	06.17.2025

Project Name and Address

PRIVATE OWNER
NEW RESIDENCE

3803 OAK AVE
NORTHBROOK, IL

Project No. 24-095

Description SITE PLAN

Sheet A-0.1

C:\Users\Thomas\Documents\24095_3803 Oak_tharch.rvt

510



2 REAR (S) ELEVATION
1/4" = 1'-0"



1 FRONT (N) ELEVATION
1/4" = 1'-0"

THOMAS ARCHITECTS
2800 S RIVER RD, #305
DES PLAINES, IL 60018
O: 847.235.6815
THOMAS @ THOMASARCH.COM

KEYNOTES - ELEVATION

1 BRICK VENEER
2 STONE VENEER
3 EIFS - SMOOTH FINISH
4 GUTTER & DOWNSPOUT - ALUM
5 NOM. 6" FASCIA BD
6 COVE MOLDING AND FRIEZE
7 ARCH ASPHALT SHINGLE - 30 YR

No.	Description	Date
1	ISSUE FOR PERMIT	04.28.2025
2	PERMIT REVISIONS	06.17.2025

Project Name and Address

PRIVATE OWNER
NEW RESIDENCE

3803 OAK AVE
NORTHBROOK, IL

Project No. 24-095

Description BUILDING ELEVATIONS

Sheet A-3.0

C:\Users\Thomas\Documents\24095 3803 Oak_tharch.rvt

511

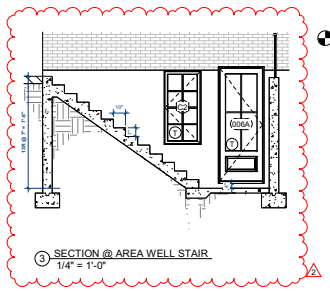

3 SECTION @ AREA WELL STAIR
1/4" = 1'-0"

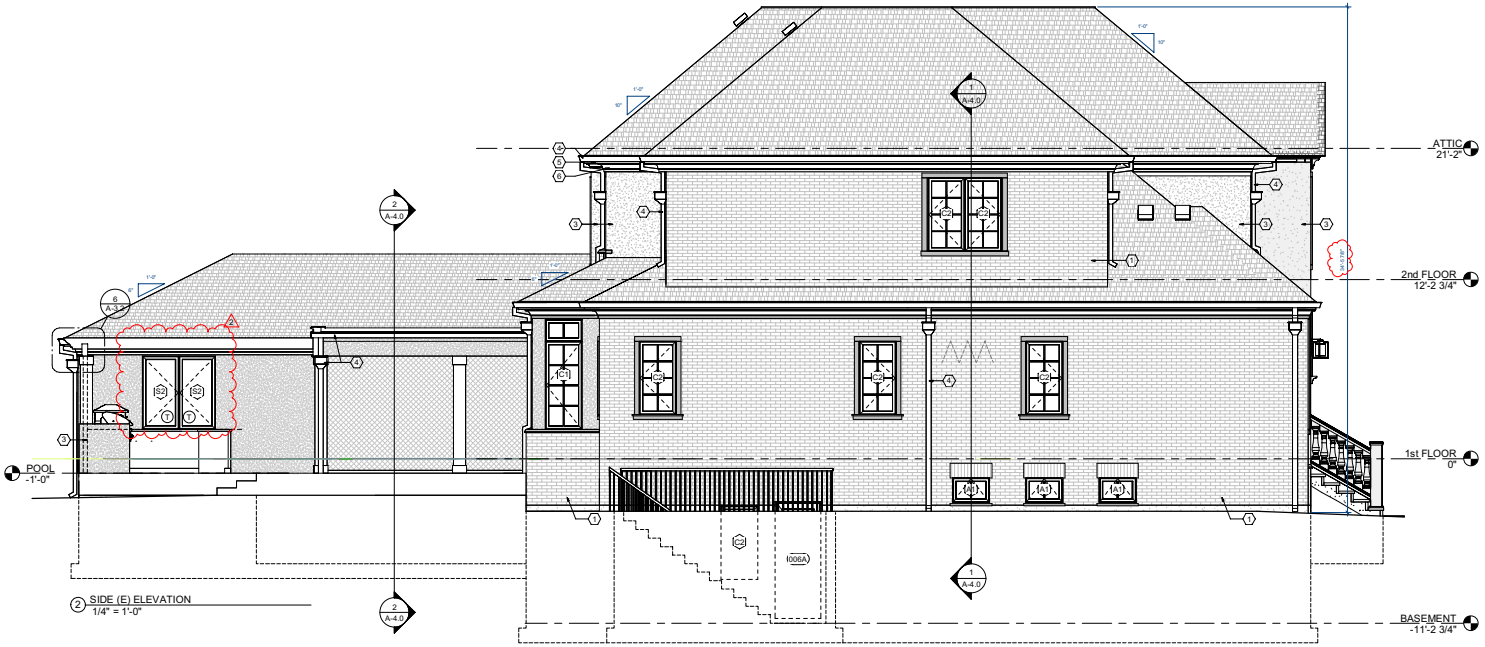

2 SIDE (E) ELEVATION
1/4" = 1'-0"



1 SIDE (W) ELEVATION
1/4" = 1'-0"

KEYNOTES - ELEVATION

1 BRICK VENEER
2 STONE VENEER
3 EIFS - SMOOTH FINISH
4 GUTTER & DOWNSPOUT - ALUM
5 NOM. 6" FASCIA BD
6 COVE MOLDING AND FRIEZE
7 ARCH ASPHALT SHINGLE - 30 YR

THOMAS ARCHITECTS
2800 S RIVER RD, #305
DES PLAINES, IL 60018
O: 847.235.6815
THOMAS @ THOMASARCH.COM

No.	Description	Date
1	ISSUE FOR PERMIT	04.28.2025
2	PERMIT REVISIONS	06.17.2025

Project Name and Address

PRIVATE OWNER
NEW RESIDENCE

3803 OAK AVE
NORTHBROOK, IL

Project No. 24-095

Description BUILDING ELEVATIONS

Sheet A-3.1

C:\Users\Thomas\Documents\24095 3803 Oak_tharch.rvt

MEMORANDUM

To: Village Manager Cara Pavlicek
From: Director of Development and Planning Services Amy McEwan
Date: 2025-08-12
Subject: Public Hearing for BOT-25-11: 1307 Shermer Road - Ira Holtzman - Zoning Variations for Detached Garage and Parking Improvements in C-1/VGO District

Overview

The applicant and property owner is requesting zoning variations to allow construction of a detached garage and associated parking improvements. The property is in the Village Green Overlay (VGO) District and therefore, requires approval by the Board of Trustees.

Fiscal Impact

N/A.

Recommendation

Conduct a Public Hearing.

Background

The applicant, Ira Holtzman, owner of the property at 1307 Shermer Road, has requested the following zoning relief for a detached garage and associated parking improvements in the C-1 Specialty Commercial District/Village Green Overlay District:

A. a variation to reduce the required rear yard setback from 50 feet to 5 feet for a proposed detached garage; and
B. a major variation to increase the maximum height for a detached garage not to exceed 17 feet.

Section 8-111 of the Zoning Code states that the Board of Trustees reserves the right to review and decide on variation requests for properties within the Village Green Overlay (VGO) District, stating – "*Whenever an application for a variation concerning property located within the Village Green Overlay District is filed pursuant to this Code or the Village Subdivision and Development Code (1991), the authority to hear and decide the application otherwise delegated to the Zoning Board of Appeals pursuant to Section 11-503 of this Code shall be reserved to the Board of Trustees. For such purposes, the Board of Trustees shall have all the authority granted to, and shall be subject to all the limitations imposed on, the Zoning Board of Appeals pursuant to Section 11-503 of this Code*".

On August 12, 2025, following the Public Hearing, the Board will consider an Ordinance, which if approved, would grant Variations for the subject property located in the C-1 Specialty Commercial District/ Village Green Overlay (VGO). There is one written public comment received stating their concern regarding the location and size of the proposed garage, which is attached.

In reviewing this request, we suggest the Board consider the following questions:

1. Are the proposed improvements compatible with the adjacent single-family district?
2. Is it appropriate to grant a variation to reduce the required rear yard setback from 50 feet to 5 feet for a proposed detached garage and at-grade parking pad?
3. Is it appropriate to grant a variation to increase the maximum height for a detached garage not to exceed 17 feet?

The subject property currently has a structure which was originally a single-family residence and now is a mixed-use building, with commercial use on the first floor and residential on the second floor. The applicant has proposed a single-story detached garage with parking adjacent in the rear (south) of the property. The proposed garage and parking area does not comply with the required rear yard and setback requirement of the C-1/VGO District. The detached garage does not comply with maximum height requirement of fifteen feet for the accessory structure in the C-1/VGO District. A staff zoning analysis, project details, and Standards for variations of the request is attached. Also attached is a narrative and plans from the applicant.

The proposed improvements attempt to address parking needs while maintaining the residential character. This following excerpt conveys the intent of the underlying zoning district as stated in the Zoning Code (5-101),

"…the C-1 Specialty Commercial District is intended to provide for small shops, stores and boutiques in the older areas of the Village adjacent to the central business areas where it is possible to retain the residential character and appearance of the Village and at the same time promote business activity. The regulations are designed to encourage the retention and renovation of sound existing structures and to ensure that the business uses remain compatible with the residential uses while permitting the area to maintain a distinctive character".

The applicant and staff will attend the August 12, 2025 meeting in case there are any questions.

Supplemental - Applicant Submittal - 1307 Shermer
Supplemental - Zoning Analysis - 1307 Shermer
Supplemental - Public Comment - 1307 Shermer
Supplemental - Presentation - 1307 Shermer

Village of Northbrook Zoning Board

Hardship Letter for 1305-07 Shermer Road

We are requesting a zoning variance to construct a garage at the back of our property for my RV and two cars. We are currently zoned C1 but our property is residential as well as the properties around us. C1 zoning requires a 50 foot set back. This would prohibit us from constructing a garage. We therefore request the variance to comply with residential zoning which would require only a 5 foot set back.

This garage would satisfy each of the standards of subsection 11-503F.

1. General Standard 50 ft set back creates a hardship
2. Unique Physical Condition surrounding property is residential
3. Not Self-Created Not the result of any action of the owner
4. Denied Substantial Rights This would deny substantial rights enjoyed by other owners.
5. Not Merely Special Privilege We are not requesting any special privileges.
6. Code and Plan Purposes the garage would be in harmony with the general specific purposes of the code.
7. Essential Character of the Area the variation would comply with all items listed 7 a) thru f)
8. No Other Remedy there is no other means the garage can be built without a zoning variance.

Thank you for your consideration.

Sincerely

Ira Holtzman

847-340-3300

Development and Planning Services
1225 Cedar Lane Northbrook, Illinois 60062
TELEPHONE: 847/664-4055; EMAIL: richard.peters@northbrook.il.us
www.northbrook.il.us

northbrook

Zoning Board of Appeals

Application for Variations and Exceptions

APPLICATION REQUIREMENTS: As part of this formal application for a variation or exception, the applicant must submit all of pertinent information prior to the scheduling of a public hearing. ***Please note***: If any of the required information below is missing by the application deadline, you will not be permitted to proceed with the public hearing for the following month. You will be required to first submit all required materials and then apply to appear at the next available hearing. A **preliminary application submittal must be arranged with the Zoning Administrator at least one week prior to the deadline to ensure all is in order and allow time to make revisions if necessary prior to the final submittal cutoff. Applications Will Not Be Accepted Without This Required Step.** A copy of the notice of hearing, which is published in the local newspaper, will be mailed to the applicant. The notice must be mailed certified mail return receipt to all owners of properties within 250 feet of the subject property (excluding rights-of-way) and must be made not less than 15 days or more than 30 days prior to the hearing.

ADDRESS: 1307 Shermer Rd **ZBA DOCKET:**

☐ **Zoning Application Fee, payable to the "Village of Northbrook" (if check):**

Non-Refundable Fee	
Residential.....	$350.00*
....Non-Residential.....	$600.00

*An additional $100 non-refundable fee will be applied for each applicant-requested continuance

☐ **Application** – Completed in its entirety

☐ **Zoning Worksheet or Fence Application**

☒ **Letter of Hardship**
Explain in detail the requested variation/exception, the characteristics of the property that prevent compliance with said Code provision, and a statement of how the variation sought would satisfy each of the standards set forth in either Subsection 11-503F or 11-505A of the Zoning Code (attached).

☒ **Plat of Survey Drawn to Scale**
- Legal description of property must be shown
- Plat must be dated and stamped by surveyor
- A mortgage/real estate survey is not acceptable

☐ **Site Plan Drawn to Scale**
- Prepared by the architect or surveyor detailing all building improvements and impervious areas, lot line dimensions, accessory structures, easements and all public and private right of ways.
- The site plan shall indicate the location of the proposed improvement requiring variation approval, highlighting the area of the setback encroachment.
- Dimensions/setbacks from all sides of the building to all adjacent lot lines must be shown.

****All materials must be submitted electronically, either via email attachments or on a thumb drive. Shared files and third party websites will not be accepted.**

☐ **Building Plans Drawn to Scale**
- Dated and stamped by an architect
- Existing and proposed floor plans with room names and dimensions, along with a clear outline of what is existing, what is new and which walls will be removed. The entire floor where the variation is requested must be shown. The floor plan must also show doors and windows.
- Existing and proposed elevations for all sides affected (at least 3) including building/ridge height, proposed roof slope pitch and existing and proposed exterior finishes.

☒ **Tree Survey**
Regardless of the proposed work, submit a tree survey showing all existing trees with diameter at breast height (DBH). A hand drawing of tree locations on a plat of survey is usually acceptable.

☒ **Proof of Ownership**
- Only a ***Warranty deed*** or ***owner's title policy*** in its entirety.
- If the property is held in trust, the Trust Agreement in its entirety.
- If petitioner is contract purchaser or lessee, notarized proof of authority to file on behalf of the owner is required.

☒ **Affidavit of Survey (Attached)**
Required for all surveys over one year old.

☒ **Other Exhibits Recommended**
- Photos, letters of support from adjacent neighbors, etc...

Requested Action

- ☐ **Yard or Setback Variation**
- ☐ **Fence Height Exception**
- ☐ **Parking/Loading Reduction**
- ☐ **Increase in Accessory Building Height**
- ☐ **Tennis Court Illumination**
- ☐ **Increase Maximum No. of Signs**
- ☐ **Pre-code Structure Moving or Restoration**
- ☒ **Other** Garage

Brief Description of Variation or Exception Request 5 foot setbacks from property line and garage height

Applicant Information

Applicant Name/Company: Ira Holtzman / I+A Holdings LLC
Address: 1307 Shermer Rd
City: Northbrook **State:** IL **Zip:** 60062
Telephone (847) 340-3300 **Email:** iholtzman@aol.com

Primary Contact Person

Name/Company: Ira Holtzman
Address: 1307 Shermer Rd
City: Northbrook **State:** IL **Zip:** 60062
Telephone (847) 340-3300 **Email:** iholtzman@aol.com

Property Information

Site Location/Address: 1305-07 Shermer Rd
Real Estate Index Nos.: 04-10-302-032-0000, 04-10-302-034-0000
Size of Property: 11,394 **(square feet acres)**
Current Zoning: C1 **Current Use:** Office 1st Floor Apartment 2nd Floor
Is any portion of the property within the 100-year floodplain? **Yes:** X **No** _____

Northbrook Ethics Code *(Potential conflicts of interest.)*
On a separate sheet of paper, list the name, address and nature and extent of any current or potential interest that any Village officer or employee may have in or with respect to the owner, the applicant or the property. **If none, check here:** X (For more information, see Sections 2-71 through 2-85 of the Northbrook Municipal Code.)

Repeat Application
Has any other application for this property been submitted to the Village and denied within the last two years? _____ yes ___ no X
If yes, attach a statement of the grounds justifying reconsideration (See Zoning Code Sec. 11-302).

Applicant/Owner Acknowledgments
By execution of this application in the space provided below, the Applicant and Owner(s) do hereby certify, acknowledge, agree and affirm to the Village of Northbrook that:

1. The Village and its representatives have the right, and are hereby granted permission and license, to enter upon the property, and into any structures located thereon, for purposes of conducting any inspections that may be necessary in connection with this application.

2. I (We) have carefully read this application, the Northbrook Zoning Code and Northbrook Subdivision & Development Code and fully understand the terms and provisions of each.

3. I (We) waive any rights to exemption from disclosure under the Illinois Freedom of Information Act of any and all documents and information submitted in connection with this application.

4. I (We), in accordance with the requirements of the Annual Fee Ordinance, the Northbrook Zoning Code and the Northbrook Subdivision & Development Code, agree to pay all applicable filing fees and be responsible for the payment of all reimbursable expenses associated with the processing of this application.

Applicants may attach additional materials or exhibits to this application if necessary or helpful in explaining the relief requested.

Signature of Applicant _____ Date 6/12/25

Signatures of Owner(s) _____ Date 6/12/25

_____ Date 6/12/25

Consultants (as applicable)

Attorney

Name _____
Company _____
Address _____
City, State, Zip _____
Phone No. _____
Email _____

Planning/Landscape Architect

Name Cliff Town
Company Town Studios Inc.
Address 1297 Shermer Rd
City, State, Zip Northbrook IL 60062
Phone No. 847 498-0900
Email Cliff@townstudios.com

Civil Engineer

Name _____
Company _____
Address _____
City, State, Zip _____
Phone No. _____
Fax No. _____
E-mail _____

Other

Name _____
Company _____
Address _____
City, State, Zip _____
Phone No. _____
Fax No. _____
E-mail _____

Site Ownership and Control

List all legal and beneficial owners and their current mailing addresses:

Isa Holtzman 1307 Shermer Rd Northbrook, IL 60062
William Schloss 1307 Shermer Rd Northbrook, IL 60062

Attach a copy of a document showing ownership of the property **and, if different,** the applicant's ownership, control of or interest in the property (Title Policy, real estate contract, deed, etc.). If property is in a trust, attach a certified copy of the trust agreement. (Check which documents are attached)

☐ **Title Policy**

☐ **Trust Agreement**

☒ **Deed**

PLAT OF SURVEY

OF

LOT 3 AND THE NORTHWESTERLY 50.0 FEET OF LOT 4, EXCEPT THE SOUTHWESTERLY 40 FEET THEREOF. ALSO EXCEPT THE NORTHEASTERLY 152.90 FEET THEREOF MEASURED ALONG THE NORTHWESTERLY LINE OF THE NORTHWESTERLY 50 FEET OF LOT 4, IN GEORGE A. KIEST'S SUBDIVISION OF BLOCKS 2 AND 4 BEING A SUBDIVISION OF THE WEST ½ OF THE SOUTHWEST ¼ OF SECTION 10, TOWNSHIP 42 NORTH, RANGE 12 EAST OF THE THIRD PRINCIPAL MERIDIAN, RECORDED JANUARY 14, 1893 AS DOCUMENT NUMBER 1801047 IN COUNTY OF COOK AND THE STATE OF ILLINOIS.

COMMONLY KNOWN AS: 1305 &1307 SHERMER AVENUE, NORTHBROOK, ILLINOIS.

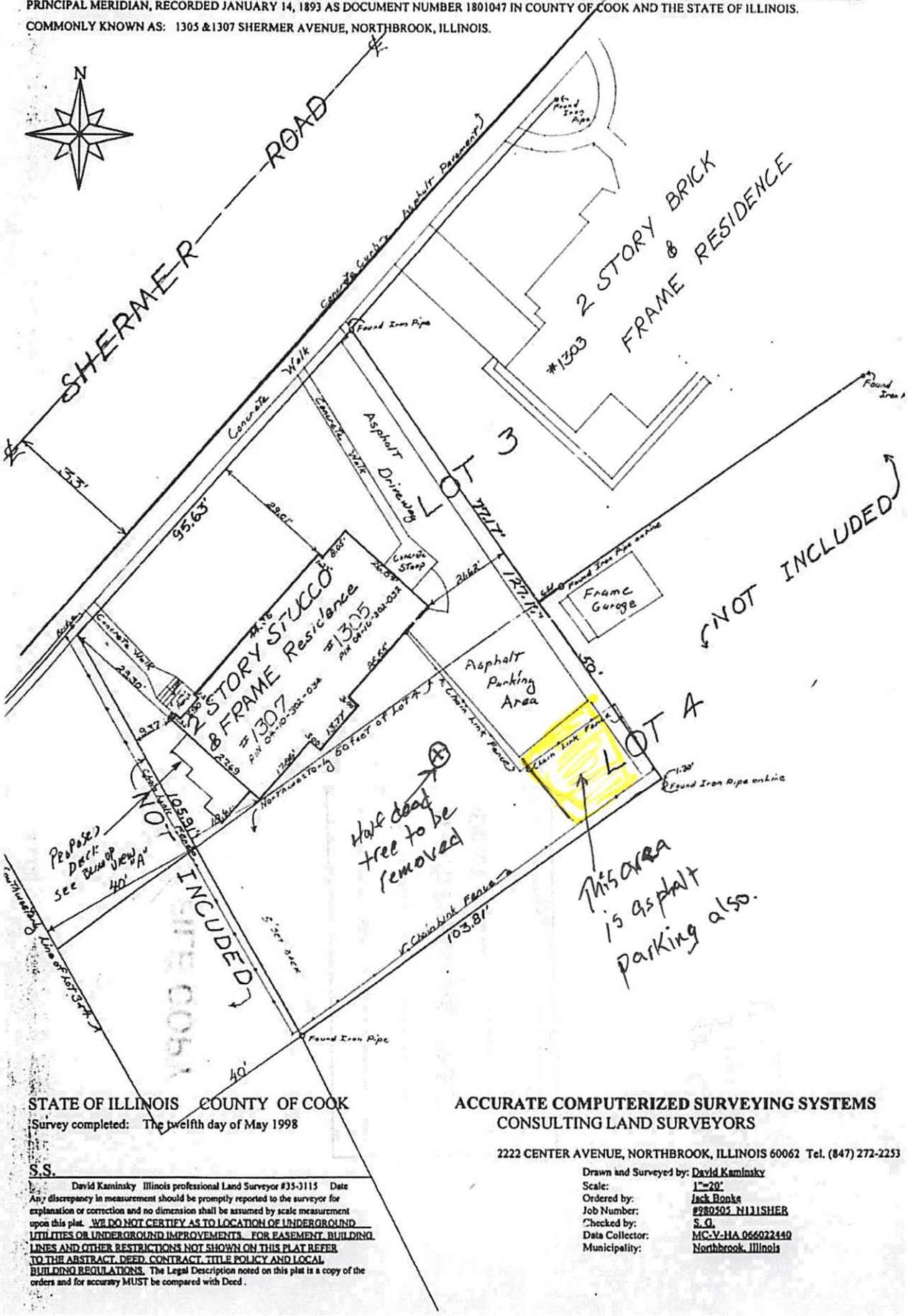

STATE OF ILLINOIS COUNTY OF COOK

Survey completed: The twelfth day of May 1998

S.S.

David Kaminsky Illinois professional Land Surveyor #35-3115 Date

Any discrepancy in measurement should be promptly reported to the surveyor for explanation or correction and no dimension shall be assumed by scale measurement upon this plat. WE DO NOT CERTIFY AS TO LOCATION OF UNDERGROUND UTILITIES OR UNDERGROUND IMPROVEMENTS. FOR EASEMENT, BUILDING LINES AND OTHER RESTRICTIONS NOT SHOWN ON THIS PLAT REFER TO THE ABSTRACT, DEED, CONTRACT, TITLE POLICY AND LOCAL BUILDING REGULATIONS. The Legal Description noted on this plat is a copy of the orders and for accuracy MUST be compared with Deed.

ACCURATE COMPUTERIZED SURVEYING SYSTEMS
CONSULTING LAND SURVEYORS

2222 CENTER AVENUE, NORTHBROOK, ILLINOIS 60062 Tel. (847) 272-2253

Drawn and Surveyed by:	David Kaminsky
Scale:	1"=20'
Ordered by:	Jack Bonke
Job Number:	#980505 N131SHER
Checked by:	S. G.
Data Collector:	MC-V-HA 066022440
Municipality:	Northbrook, Illinois

Development & Planning Services Department
1225 Cedar Lane
Northbrook, Illinois 60062
847-664-4055
www.northbrook.il.us

northbrook

Zoning Board of Appeals

Plat of Survey Affidavit

Required for plats of surveys over one year old

STATE OF ILLINOIS
COUNTY OF COOK

AFFIDAVIT

Ira Holtzman, being first duly sworn upon oath, deposes and states that the Plat of Survey dated 5/12/1998 for the property commonly known as 1305-07 Sherman Rd, Northbrook, Illinois shows all of the structures and impervious surfaces presently on the property, plus additional asphalt parking area. Driveway was extended to the fence.

Affiant

Subscribed and sworn to before me this
12th day of JUNE, 2025.

Notary Public

_____(SEAL)

MICHAEL E TABOR
OFFICIAL SEAL
Notary Public, State of Illinois
My Commission Expires
May 31, 2026

11-503 F. Standards for Variations.

1. General Standard. No variation shall be granted pursuant to this Section unless the applicant shall establish that carrying out the strict letter of the provisions of this Code would create a particular hardship or practical difficulty. Such a showing shall require proof that the variation being sought satisfies each of the standards set forth in this Subsection F.

2. Unique Physical Condition. The subject property is exceptional as compared to other lots subject to the same provision by reason of a unique physical condition, including presence of an existing use, structure or sign, whether conforming or nonconforming; irregular or substandard shape or size; exceptional topographical features; or other extraordinary physical conditions peculiar to and inherent in the subject property that amount to more than a mere inconvenience to the owner and that relate to or arise out of the lot rather than the personal situation of the current owner of the lot.

3. Not Self-Created. The aforesaid unique physical condition is not the result of any action or inaction of the owner or his predecessors in title and existed at the time of the enactment of the provisions from which a variation is sought or was created by natural forces or was the result of governmental action, other than the adoption of this Code, for which no compensation was paid.

4. Denied Substantial Rights. The carrying out of the strict letter of the provision from which a variation is sought would deprive the owner of the subject property of substantial rights commonly enjoyed by owners of other lots subject to the same provision.

5. Not Merely Special Privilege. The alleged hardship or difficulty is not merely the inability of the owner or occupant to enjoy some special privilege or additional right not available to owners or occupants of other lots subject to the same provision, nor merely an inability to make more money from the sale of the subject property; provided, however, that where the standards herein set out exist, the existence of an economic hardship shall not be a prerequisite to the grant of an authorized variation.

6. Code and Plan Purposes. The variation would not result in a use or development of the subject property that would not be in harmony with the general and specific purposes for which this Code and the provision from which a variation is sought were enacted or the general purpose and intent of the Official Comprehensive Plan.

7. Essential Character of the Area. The variation would not result in a use or development on the subject property that:

   a) Would be materially detrimental to the public welfare or materially injurious to the enjoyment, use, development value of property or improvements permitted in the vicinity;
   b) Would materially impair an adequate supply of light and air to the properties and improvements in the vicinity;
   c) Would substantially increase congestion in the public streets due to traffic or parking;
   d) Would unduly increase the danger of flood or fire;
   e) Would unduly tax public utilities and facilities in the area; or
   f) Would endanger the public health or safety.

8. No Other Remedy. There is no means other than the requested variation by which the alleged hardship or difficulty can be avoided or remedied to a degree sufficient to permit a reasonable use of the subject property.

Marc L. Muskat
ATTORNEY AT LAW

TELEPHONE: (847) 564-1391
FAX: (847) 564-2542
email: mkat44@aol.com
2657 WALTERS AVE.
NORTHBROOK, IL 60062

November 23, 2020

Ira Holtzman
Lower Electric, LLC
1301 Shermer Ave.
Northbrook, IL 60062

Dear Ira:

Enclosed is the original Scrivener's Affidavit for 1307 Shermer Ave. that added the second PIN.

For quick background, the transfer document from the Land Trust did not include the second PIN. This was only caught when I went to transfer Bill's interest in the property to his Trust.

Therefore, I had to file a document to correct the original transfer before preparing the Quit Claim Deed for Bill's interest. This recent filing should also take care of any issues that may arise for your LLC interest in the future.

I have enclosed a copy for Bill.

If you have any questions, please let me know.

Sincerely,

Marc L. Muskat

Cc: Bill Schloss

2032306082

Doc# 2032306082 Fee $93.00

RHSP FEE:$9.00 RPRF FEE: $1.00

EDWARD M. MOODY

COOK COUNTY RECORDER OF DEEDS

DATE: 11/18/2020 10:23 AM PG: 1 OF 3

SCRIVENER'S AFFIDAVIT

Prepared By: (Name & Address)

MARC L. MUSKAT
2657 WALTERS AVE.
NORTHBROOK, IL 60062

Property Identification Number:

04-10-302-034-0000

Document Number to Correct:

1405756223

I, IRA HOLTZMAN, the affiant and preparer of this Scrivener's Affidavit, whose relationship to the above-referenced document number is (ex. drafting attorney, closing title company, grantor/grantee, etc.):

GRANTOR - OWNER, do hereby swear and affirm that Document Number:

1405756223, included the following mistake: THE PIN OF 04-10-302-034-0000 WAS OMITTED. THE LEGAL WAS CORRECTLY SHOWN FOR BOTH PARCELS AND THE PIN FOR ONE PARCEL WAS CORRECTLY SHOWN

which is hereby corrected as follows: (use additional pages as needed, **legal must be attached for property**, or attach an exhibit which includes the correction—but **DO NOT ATTACH** the original/certified copy of the originally recorded document): ADD PIN 04-10-302-034-0000 TO DOCUMENT 1405756223

Finally, I IRA HOLTZMAN, the affiant, do hereby swear to the above correction, and believe it to be the true and accurate intention(s) of the parties who drafted and recorded the referenced document.

Affiant's Signature Above

8/20/2020
Date Affidavit Executed

NOTARY SECTION:

State of ILLINOIS)
County of Cook)

I, MARC L. MUSKAT, a Notary Public for the above-referenced jurisdiction do hereby swear and affirm that the above-referenced affiant did appear before me on the below indicated date and affix her/his signature or marking to the foregoing Scrivener's Affidavit after providing me with a government issued identification, and appearing to be of sound mind and free from any undue coercion or influence.

AFFIX NOTARY STAMP BELOW

Notary Public Signature Below, Date Notarized Below

Marc Muskat 8/20/2020

MARC L MUSKAT
Official Seal
Notary Public – State of Illinois
My Commission Expires Apr 3, 2021

S Y
P
S
M
SC
E
INT

TRUSTEE'S DEED

This indenture made this 3RD day of FEBRUARY 2014, between CHICAGO TITLE LAND TRUST COMPANY, a corporation of Illinois, successor trustee to Cole Taylor Bank, as trustee under the provisions of a deed or deeds in trust, duly recorded and delivered to said company in pursuance of a trust agreement dated the 18th day of SEPTEMBER, 2000 and known as Trust Number 01-9056 party of the first part, and--- I & A HOLDINGS LLC-SERIES 1307 SHERMER (50%) AND WILLIAM K. SCHLOSS AND LESLIE A. SCHLOSS AS JOINT TENANTS WITH RIGHT OF SURVIVORSHIP (50%)
WHOSE ADDRESS IS:--- 1307 SHERMER ROAD, NORTHBROOK, IL. 60062 party of the second part.

Doc#: 1405756223 Fee: $42.00
RHSP Fee:$9.00 RPRF Fee: $1.00
Affidavit Fee: $2.00
Karen A.Yarbrough
Cook County Recorder of Deeds
Date: 02/26/2014 01:27 PM Pg: 1 of 3

Reserved for Recorder's Office

WITNESSETH, That said party of the first part, in consideration of the sum of TEN and no/100 DOLLARS ($10.00) AND OTHER GOOD AND VALUABLE considerations in hand paid, does hereby CONVEY AND QUITCLAIM unto said party of the second part, the following described real estate, situated in COOK,County, Illinois,to wit:----------

PARCEL 1: LOT 3 (EXCEPT THE SOUTHWESTERLY 40 FEET THEREOF AND EXCEPT THE NORTHEASTERLY 153 FEET THEREOF AS MEASURED ON THE SOUTHWESTERLY LINE) IN GEORGE A. KIEST'S SUBDIVISION OF BLOCKS 2 AND 4 IN THE SUBDIVISION OF PART OF WEST HALF OF SECTION 10, TOWNSHIP 42 NORTH, RANGE 12, EAST OF THE THIRD PRINCIPAL MERIDIAN, IN COOK COUNTY, ILLINOIS.
PARCEL 2: THE NORTHWESTERLY 50 FEET OF LOT 4 (EXCEPT THE SOUTHWESTERLY 40 FEET AND EXCEPT THE NORTHEASTERLY 153 FEET THEREOF AS MEASURED ON THE NORTHWESTERLY LINE OF SAID LOT 4) IN GEORGE A. KEIST'S SUBDIVISION OF BLOCK 2 AND 4 IN THE SUBDIVISION OF PART OF THE WEST ½ OF SECTION 10, TOWNSHIP 42 NORTH, RANGE 12 EAST OF THE THIRD PRINCIPAL MERIDIAN, IN COOK COUNTY, ILLINOIS.

PROPERTY ADDRESS: 1307 SHERMER ROAD, NORTHBROOK, IL. 60062

PERMANENT TAX NUMBER: 04-10-302-032-0000

together with the tenements and appurtenances thereunto belonging.
TO HAVE AND TO HOLD the same unto said party of the second part, and to the proper use, benefit and behoof forever of said party of the second part.
This deed is executed pursuant to and in the exercise of the power and authority granted to and vested in said trustee by the terms of said deed or deeds in trust delivered to said trustee in pursuance of the trust agreement above mentioned. This deed is made subject to the lien of every trust deed or mortgage (if any there be) of record in said county given to secure the payment of money, and remaining unreleased at the date of the delivery hereof.
IN WITNESS WHEREOF, said party of the first part has caused its corporate seal to be hereto affixed, and has caused its name to be signed to these presents by its Trust Officer the day and year first above written.

CHICAGO TITLE LAND TRUST COMPANY, CORPORATE SEAL, CHICAGO, ILLINOIS

CHICAGO TITLE LAND TRUST COMPANY,
as Trustee as Aforesaid

By: _____
Trust Officer

Exhibit - Corrected

TRUSTEE'S DEED

This indenture made this 3RD day of FEBRUARY 2014, between CHICAGO TITLE LAND TRUST COMPANY, a corporation of Illinois, successor trustee to Cole Taylor Bank, as trustee under the provisions of a deed or deeds in trust, duly recorded and delivered to said company in pursuance of a trust agreement dated the 18th day of SEPTEMBER, 2000 and known as Trust Number 01-9056 party of the first part, and---- I & A HOLDINGS LLC-SERIES 1307 SHERMER (50%) AND WILLIAM K. SCHLOSS AND LESLIE A. SCHLOSS AS JOINT TENANTS WITH RIGHT OF SURVIVORSHIP (50%)
WHOSE ADDRESS IS:----- 1307 SHERMER ROAD, NORTHBROOK, IL. 60062 party of the second part.

Doc#: 1405756223 Fee: $42.00
RHSP Fee:$9.00 RPRF Fee: $1.00
Affidavit Fee: $2.00
Karen A.Yarbrough
Cook County Recorder of Deeds
Date: 02/26/2014 01:27 PM Pg: 1 of 3

Reserved for Recorder's Office

WITNESSETH, That said party of the first part, in consideration of the sum of TEN and no/100 DOLLARS ($10.00) AND OTHER GOOD AND VALUABLE considerations in hand paid, does hereby CONVEY AND QUITCLAIM unto said party of the second part, the following described real estate, situated in COOK,County, Illinois,to wit:----------

PARCEL 1: LOT 3 (EXCEPT THE SOUTHWESTERLY 40 FEET THEREOF AND EXCEPT THE NORTHEASTERLY 153 FEET THEREOF AS MEASURED ON THE SOUTHWESTERLY LINE) IN GEORGE A. KIEST'S SUBDIVISION OF BLOCKS 2 AND 4 IN THE SUBDIVISION OF PART OF WEST HALF OF SECTION 10, TOWNSHIP 42 NORTH, RANGE 12, EAST OF THE THIRD PRINCIPAL MERIDIAN, IN COOK COUNTY, ILLINOIS.
PARCEL 2: THE NORTHWESTERLY 50 FEET OF LOT 4 (EXCEPT THE SOUTHWESTERLY 40 FEET AND EXCEPT THE NORTHEASTERLY 153 FEET THEREOF AS MEASURED ON THE NORTHWESTERLY LINE OF SAID LOT 4) IN GEORGE A. KEIST'S SUBDIVISION OF BLOCK 2 AND 4 IN THE SUBDIVISION OF PART OF THE WEST ½ OF SECTION 10, TOWNSHIP 42 NORTH, RANGE 12 EAST OF THE THIRD PRINCIPAL MERIDIAN, IN COOK COUNTY, ILLINOIS.

PROPERTY ADDRESS: 1307 SHERMER ROAD, NORTHBROOK, IL. 60062

PERMANENT TAX NUMBER: 04-10-302-032-0000 Correction 04-10-302-034-0000

together with the tenements and appurtenances thereunto belonging.
TO HAVE AND TO HOLD the same unto said party of the second part, and to the proper use, benefit and behoof forever of said party of the second part.
This deed is executed pursuant to and in the exercise of the power and authority granted to and vested in said trustee by the terms of said deed or deeds in trust delivered to said trustee in pursuance of the trust agreement above mentioned. This deed is made subject to the lien of every trust deed or mortgage (if any there be) of record in said county given to secure the payment of money, and remaining unreleased at the date of the delivery hereof.
IN WITNESS WHEREOF, said party of the first part has caused its corporate seal to be hereto affixed, and has caused its name to be signed to these presents by its Trust Officer the day and year first above written.

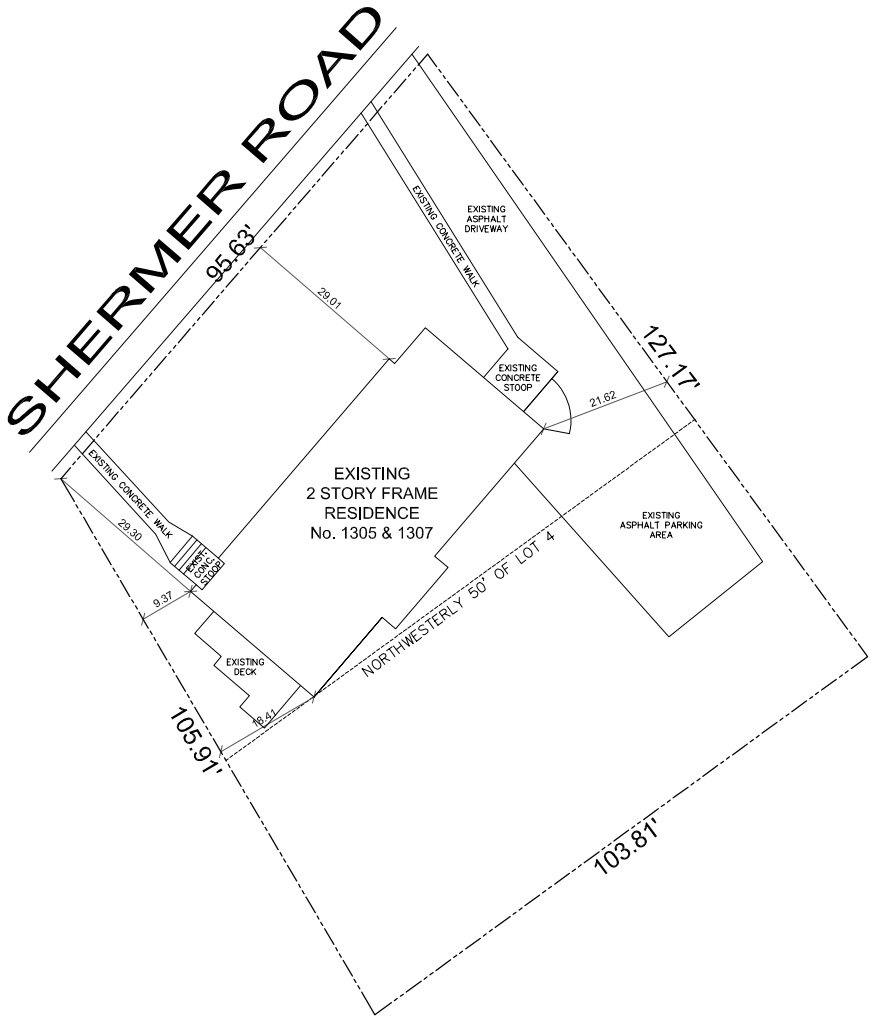

01 EXISTING SITE PLAN

SCALE: 1" = 10'-0"

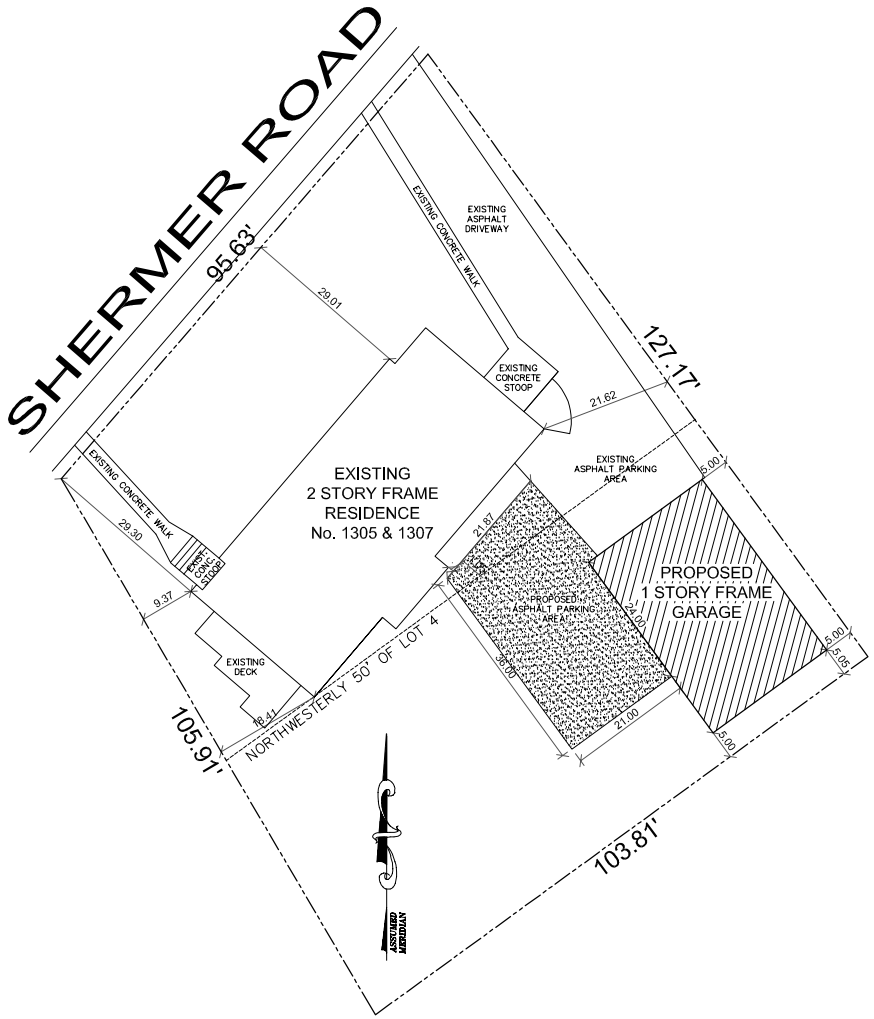

02 PROPOSED SITE PLAN

SCALE: 1" = 10'-0"

LOT AREA = 11,394 S.F.

GROSS FLOOR AREA (FAR):	EXISTING	PROPOSED	TOTAL (SF)
FIRST FLOOR	1693.78	0	1693.78
SECOND FLOOR	945.00	0	945.00
DETACHED GARAGE	0	864.00	864.00
	TOTAL FLOOR AREA		3,502.78 SF
		3502.78 / 11,394 (TOTAL BUILDING AREA / LOT AREA)	= 30.74% (FAR) (FLOOR AREA RATIO)

MAXIMUM BUILDING COVERAGE	EXISTING	PROPOSED	TOTAL (SF)
FIRST FLOOR	1693.78	0	1693.78
DETACHED GARAGE	0	864.00	864.00
	TOTAL BUILDING AREA		2,557.78 SF
		2557.78 / 11,394 (TOTAL BUILDING AREA / LOT AREA)	= 22.44% (BLDG. COVERAGE RATIO)

MAX. LOT COVERAGE (IMPERV. SURFACE)	EXISTING	PROPOSED	TOTAL (SF)
BUILDING FOOTPRINT	1693.78	0	1693.78
DETACHED GARAGE	0	864.00	864.00
DRIVEWAY	1622.88	442.22	2065.10
WALKS / STOOPS	314.18	0	314.18
DECK / PATIO	138.25	0	138.25
TOTAL IMPERVIOUS SURFACE AREA	3,769.09	1,306.22	5,075.31
		5075.31 / 11,394 (TOTAL IMPERVIOUS SURFACE AREA / LOT AREA)	= 44.54% (IMPERVIOUS SURFACE RATIO)

TOWN STUDIOS, INC.

1297 SHERMER ROAD
NORTHBROOK, ILLINOIS 60062

PHONE: 847-498-0900
WWW.TOWNSTUDIOS.COM

HOTLZMAN RESIDENCE
DETACHED GARAGE ADDITION
1305-1307 SHERMER ROAD
NORTHBROOK, ILLINOIS 60062

DATE:
6-10-25

SHEET NO.
A-1
OF 2 SHEETS

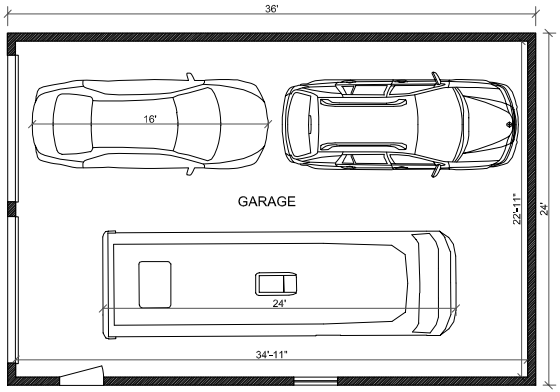

01 PROPOSED GARAGE PLAN
SCALE: 1/4" = 1'-0"

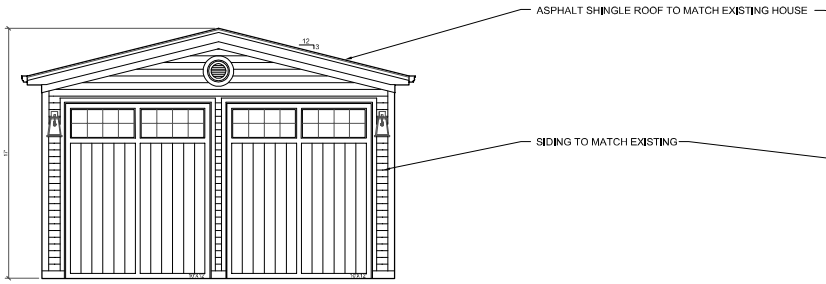

02 PROPOSED NORTHWEST ELEVATION (FACING SHERMER)
SCALE: 1/4" = 1'-0"

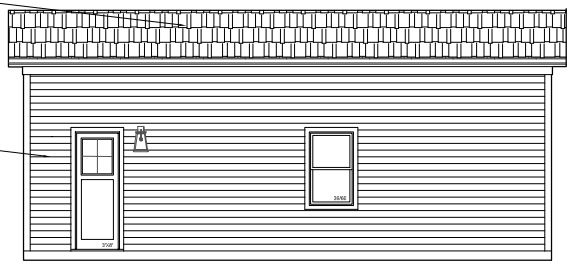

03 PROPOSED SOUTHWEST ELEVATION (RIGHT SIDE)
SCALE: 1/4" = 1'-0"

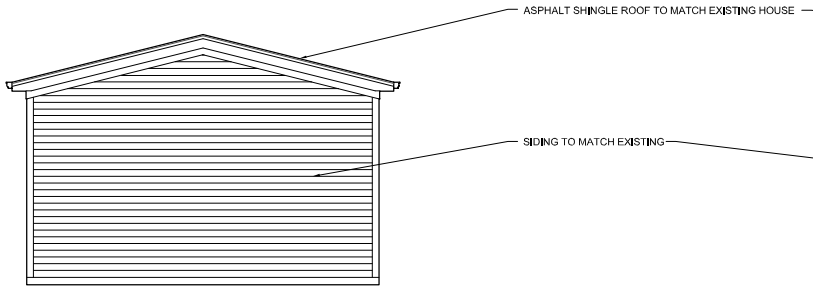

04 PROPOSED SOUTHEAST ELEVATION (REAR)
SCALE: 1/4" = 1'-0"

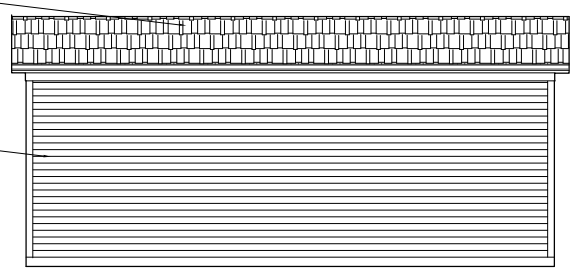

05 PROPOSED NORTHAST ELEVATION (LEFT SIDE)
SCALE: 1/4" = 1'-0"

SHEET NO. A-2 OF 2 SHEETS

DATE: 6-10-25

HOTLZMAN RESIDENCE
DETACHED GARAGE ADDITION
1305-1307 SHERMER ROAD
NORTHBROOK, ILLINOIS 60062

TOWN STUDIOS, INC.
1297 SHERMER ROAD
NORTHBROOK, ILLINOIS 60062
PHONE: 847-498-0900
WWW.TOWNSTUDIOS.COM

ZONING ANALYSIS

HEARING DATE: AUGUST 12, 2025

TO: BOARD OF TRUSTESS

FROM: Richard Peters, Zoning Administrator

SUBJECT ADDRESS: 1307 Shermer Road

ZONING: C-1, Specialty Commercial District/VGO, Village Green Overlay

DOCKET NUMBER: BOT25-11

PETITIONER & PROPERTY OWNER: Ira Holtzman

Zoning Map with Notice Buffer

Subject property

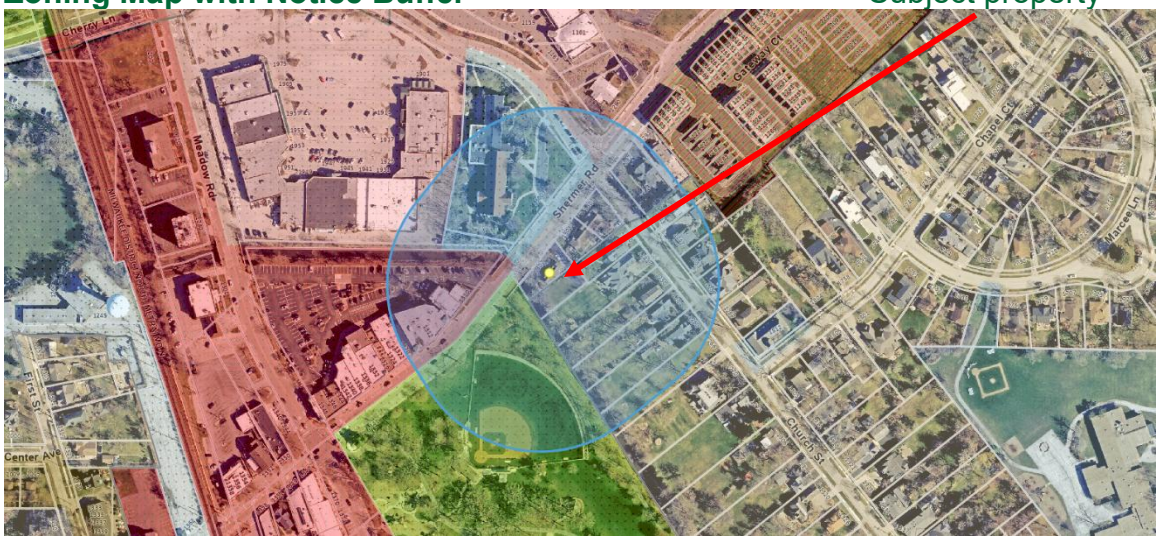

REQUESTED ACTION:

- Reduce the required rear yard setback from **50' to 5'** for the proposed improvements
- Increase the maximum detached garage height, not to exceed **17 feet**

The requests accommodate a detached garage and associated parking improvements.

RELIEF FROM ZONING CODE SECTION(S):

- 5-110 C.3.a, 9-101-D. 4 (f)(1), 9-101 E. 3. a) and 9-104 C. (1)

SITE CONDITIONS:

Table 1: Zoning Compliance Chart **Zoned C-1**, Specialty Commercial District

Zoning Compliance Chart			
Standard	**Code Standard**	**Existing Condition**	**Proposed**
Front Yard	25’	29’	No change.
Interior Side Yard	5’	-	5’
Rear Yard	50’	-	**5’**
Maximum Height – Accessory Structure	15’	-	**17’**

PROJECT DETAILS:

The subject property at 1307 Shermer Road is located in the C-1 and VGO zoning districts and contains a two-story mixed-use building with a built form resembling a single-family residence. The request has been directed to the Village Board of Trustees as the Zoning Code states the Board reserves the right to review and decide on variances within the Village Green Overlay District.

The principal building has a commercial use on the first floor, and a residential unit on the second. The intent and purpose of the C-1 district is to, “provide for small shops, stores and boutiques”, with regulations that, “encourage the retention and renovation of sound existing structures and to ensure that the business uses remain compatible with the residential uses while permitting the area to maintain a distinctive character”, (5-101). The applicant proposes a detached garage and parking area at the rear of the property which is designed to maintain the residential character. The proposal needs variances for the following reasons.

First, the Zoning Code states parking lots and areas in commercial districts are to comply with all yard requirements, whereas parking areas in single-family districts are permitted in any yard. With a depth of 106 feet, a required front yard of 25 feet and rear yard of 50 feet, the space available for parking on the subject property is limited. The applicant requests the reduction of the rear yard so a detached garage may be constructed 5 feet from the rear lot line, same as would be allowed by right in the abutting residential district.

Second, and finally, the C-1 district does not allow flat roofs. To build a detached garage that satisfies the needs of the applicant while matching the residential character of the locality, they request an additional two feet of height to accommodate the peak of the proposed detached garage. Accessory structures located within a setback or yard for a principal structure are limited to 15 feet in height, and the garage is proposed at 17 feet.

Figure 1: Site Plan – Excerpt

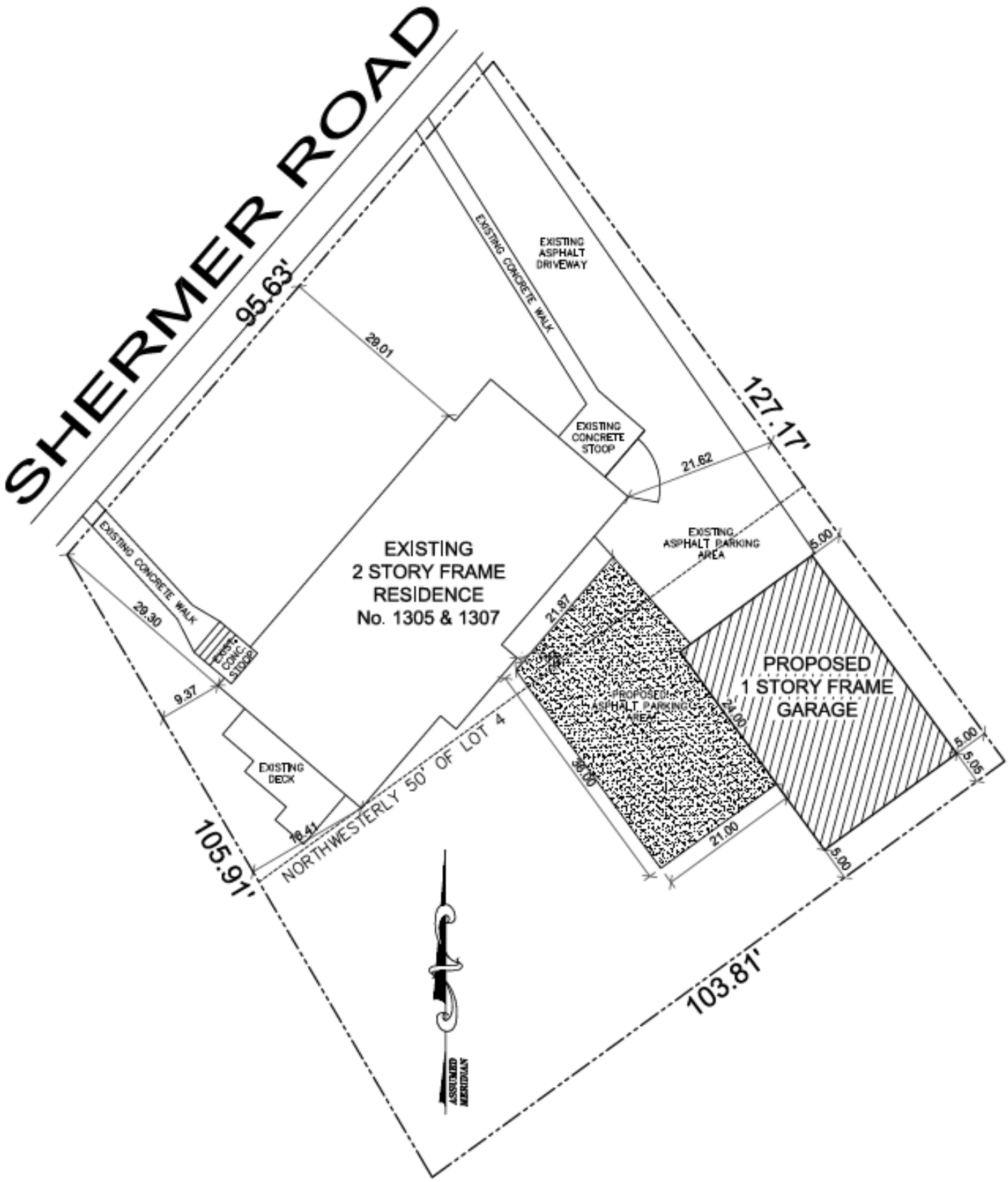

Figure 2: Garage Plans – Excerpt

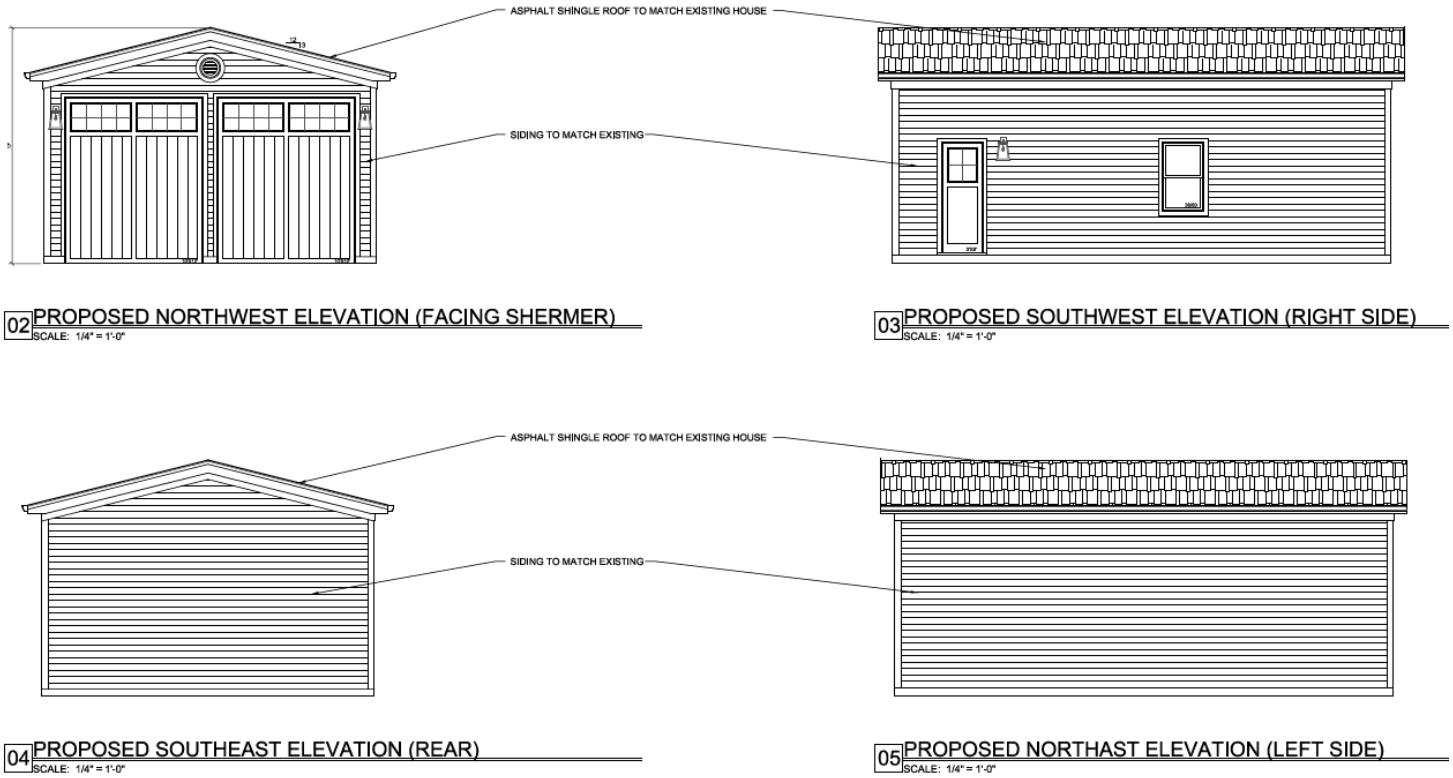

Photo 1: 1307 Shermer, Subject Property



Photo 2: 1307 Shermer, Proposed location of detached garage



VARIATION ANALYSIS:

Regarding the standards for a variation, please consider the following key points:

1. **General Standards.**
   a) *Consistent with Code and Plan Purposes:*
   The code sets forth regulations regarding parking and loading requirements. One such category, Design and Maintenance, Location on Lot (9-104 C. 1.), requires that off-street parking such as a garage shall comply with the yard requirements for that particular district with regards to exceptions in the Single Family Residential. Given that this lot mimics a single-family residential lot in several ways, a detached garage could allow for a 5-foot rear yard setback requirement without impacting the surrounding area as such is allowed in Single-Family Residential Districts.

   b) No Undue Adverse Impact:

   The proposed detached garage is not expected to create unreasonable or negative impacts on the property or the surrounding area.

   c) Compatible with Surrounding Area:
   The subject property and the construction of a detached garage within the rear yard setback is comparable to what is allowed in the abutting residential districts.

   d) Adequate Public Facilities:
   Not applicable.

e) *No Traffic Congestion:*
Not applicable.

f) *No Destruction of Significant Features:*
Not applicable.

g) *Compliance with Standards:*
The project otherwise complies with the zoning requirements.

h) *Quality Design and Construction:*

The proposed construction will meet the design and construction standards, which are to be confirmed with final inspections.

ITEMS SUBMITTED AND REVIEWED:

1. Zoning Board of Appeals Application dated, 6/17/25;
2. Affidavit, dated 6/12/25;
3. Deed, dated 10/23/20;
4. Letter of Hardship Prepared by Ira Holtzman;
5. Plat of Survey Prepared by Accurate Computerized Surveying

DRAFT MOTION:

Once the Board of Trustees has made a determination as to whether or not the applicant has successfully met the standards required for the requested variations, the following motion is provided:

Move to **accept/deny** the proposed request by Ira Holtzman for Zoning Code Variations to reduce the required rear yard and setback from 50’ to 5’ and increase the height of a detached garage to no more than 17 feet subject to the following condition(s):

- ***If approved***, that the detached garage and associated parking improvements shall be constructed in substantial compliance with the plans reviewed by the board of Trustees 8/12/25.

The Village Board likes hearing from you and encourages you to provide our board, committees, and commissions with your thoughts and ideas. We make better decisions when you get involved.

Because we know you can't always get to a meeting, we've created a way for you to share your comments with us via this web form. Comments will be delivered to all members of your selected board, committee, or commission if applicable.

Written comments will not be read aloud during a public meeting. If you want to make a 'live' comment, you can do so by attending a meeting and asking to be heard during public comment time.

Thank you for providing your valuable feedback.

(Section Break)

Select the Board, Committee, or Commission you wish to address:	Village Board of Trustees
Name	Carolyn Ferber
Email Address	stuferber@comcast.net
Address	1257 CHURCH ST
City	NORTHBROOK
State	IL
Zip Code	60062-4501
Comment:	Good afternoon, I am in receipt of the certified letter with notice of public hearing for the proposed zoning change at 1307 Shermer Road. I am writing with a strong objection. I seriously question calling this a garage as it is in reality a fair size warehouse for vehicle storage, including an RV. The requested rear yard set back is reduced from 50' to only 5' and the height restriction goes from 15' to 17'. Respectfully, that is simply too extreme and conflicts with the residential feel of the main building on that lot.

While there is an interest in not impeding a property owner's use of land at 1307 Shermer, good government and principals of fairness require the Board to look at it from the perspective of those properties impacted by the proposed change.

Here, the homeowner at 1240 Church will lose open sky and light. I predict the proposed change will render that home less desirable due to the proposed change. And who wants to look at a bulk building 17' high right off the back of the yard?

Please side with the homeowner on this one, it's not a necessary or beneficial change to anyone.

Thank you for listening.

Carolyn Ferber

Email not displaying correctly? View it in your browser.

August 12, 2025

1307 Shermer Road: Zoning Variances within the Village Green Overlay District

Northbrook Board of Trustees Meeting

Zoning Relief Process

1

- **Technical Review of Formal Application**
- Applicant files Formal Application
- Review of application, plans, scope of request(s), etc.
- Staff determines and routes the request to the decision-making body.
  * In the Village Green Overlay the Board of Trustees reserves the right to hear and decide variance applications.

2

- **Notice of Public Hearing and Staff Memo**
- Notice is sent to neighbors by certified mail; and is published in a local newspaper
- Staff receives and compiles public comments (if any) and includes copies of written statements with the case documents.
- Staff composes a report/analysis and attaches supplemental documents for the decision-making body to review.



3

- **Board of Trustees Review of Recommendations & Makes Decision (approve or deny)**
- The Board of Trustees reviews the application, supporting material and makes a final
- Board of Trustees adopts documents formally approving or denying the application.

Existing Conditions

1307 Shermer Road

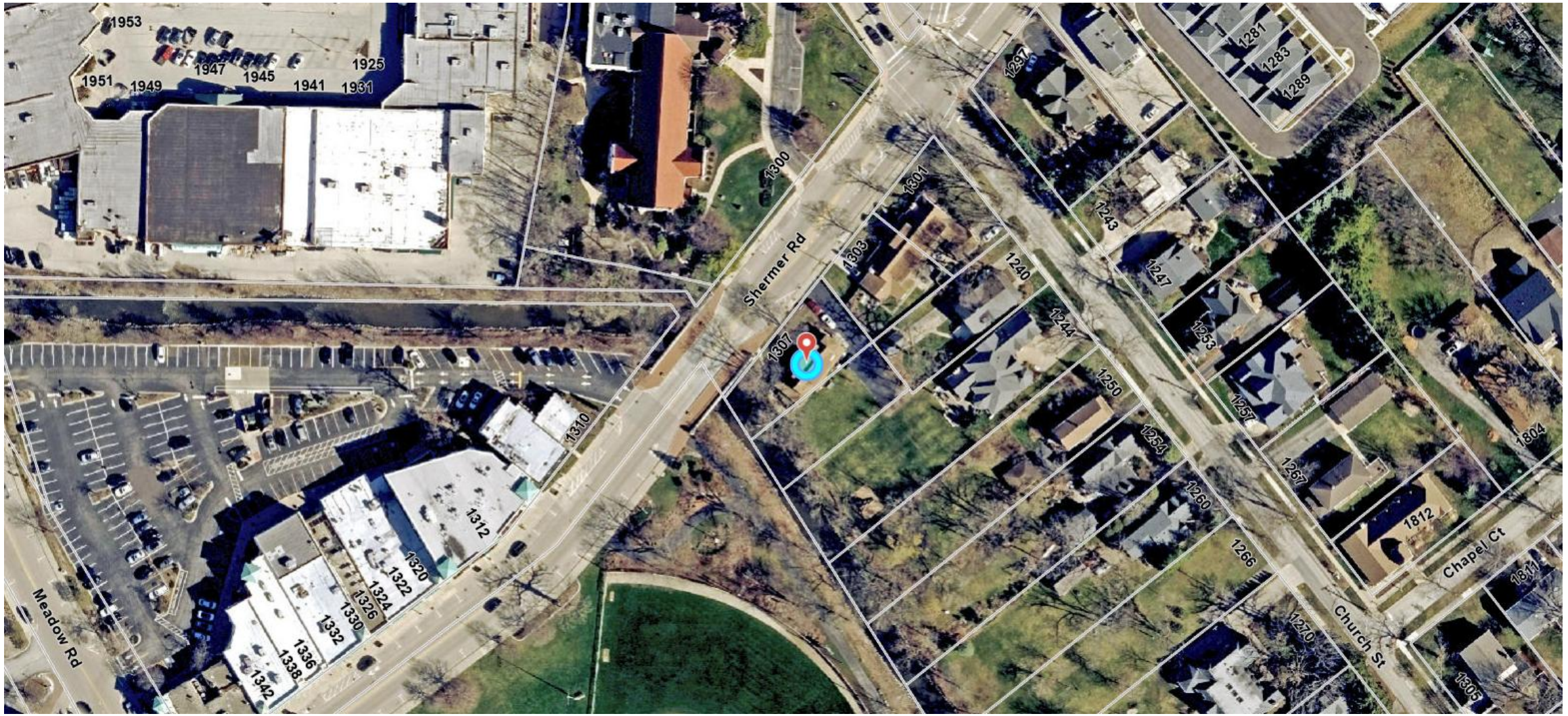

1307 Shermer Road



Comprehensive Plan Designation
Neighborhood Edge

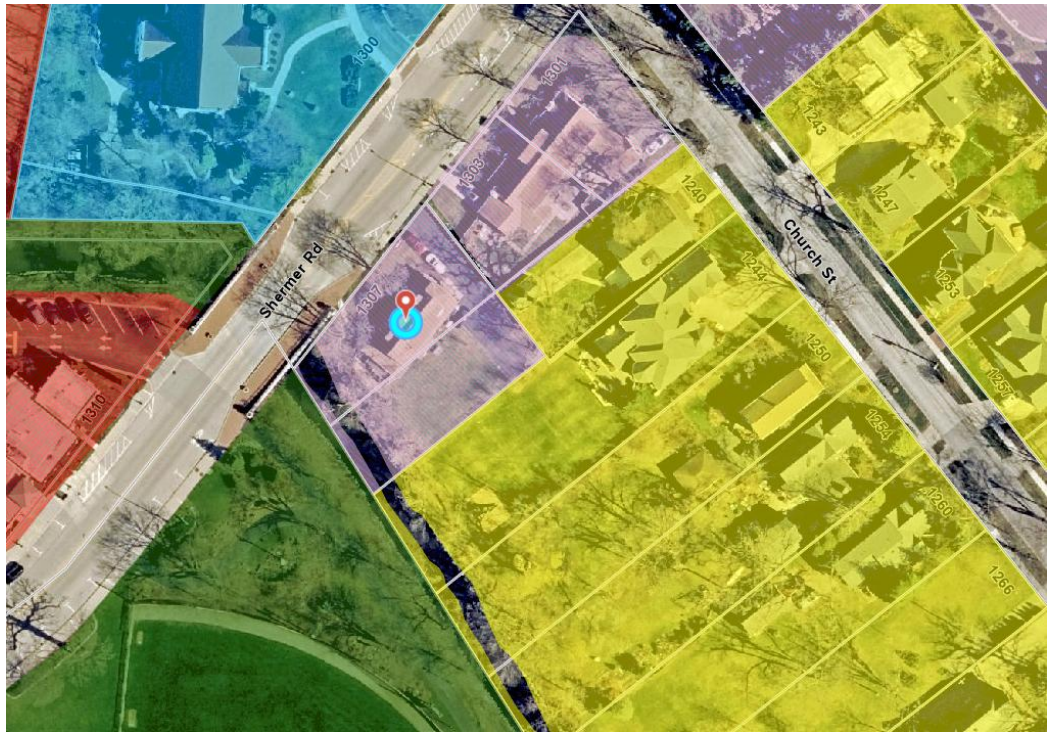

Zoning Map
C-1 Specialty Commercial/VGO District

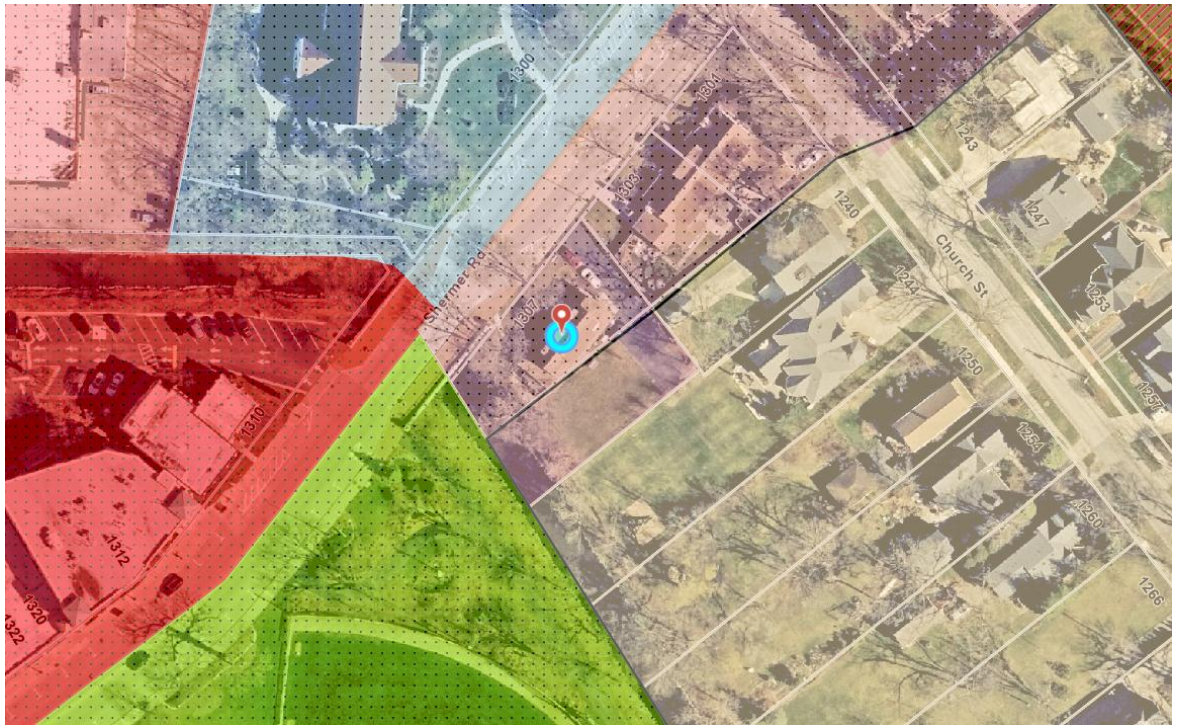

1307 Shermer Road, Front Facade



1307 Shermer Road, Rear Yard



Proposed Improvements

Proposed Improvements

New Garage/Parking Area

- Detached Garage
  - Located 5 ft. from lot lines, matching what is permitted by right in the abutting residential district
  - 17 ft. tall to accommodate pitch/peak of the roof
    - Flat roofs are not permitted in the C-1 district
- Parking pad/area west of garage
  - Located towards the center of the lot to reduce impact to neighboring properties

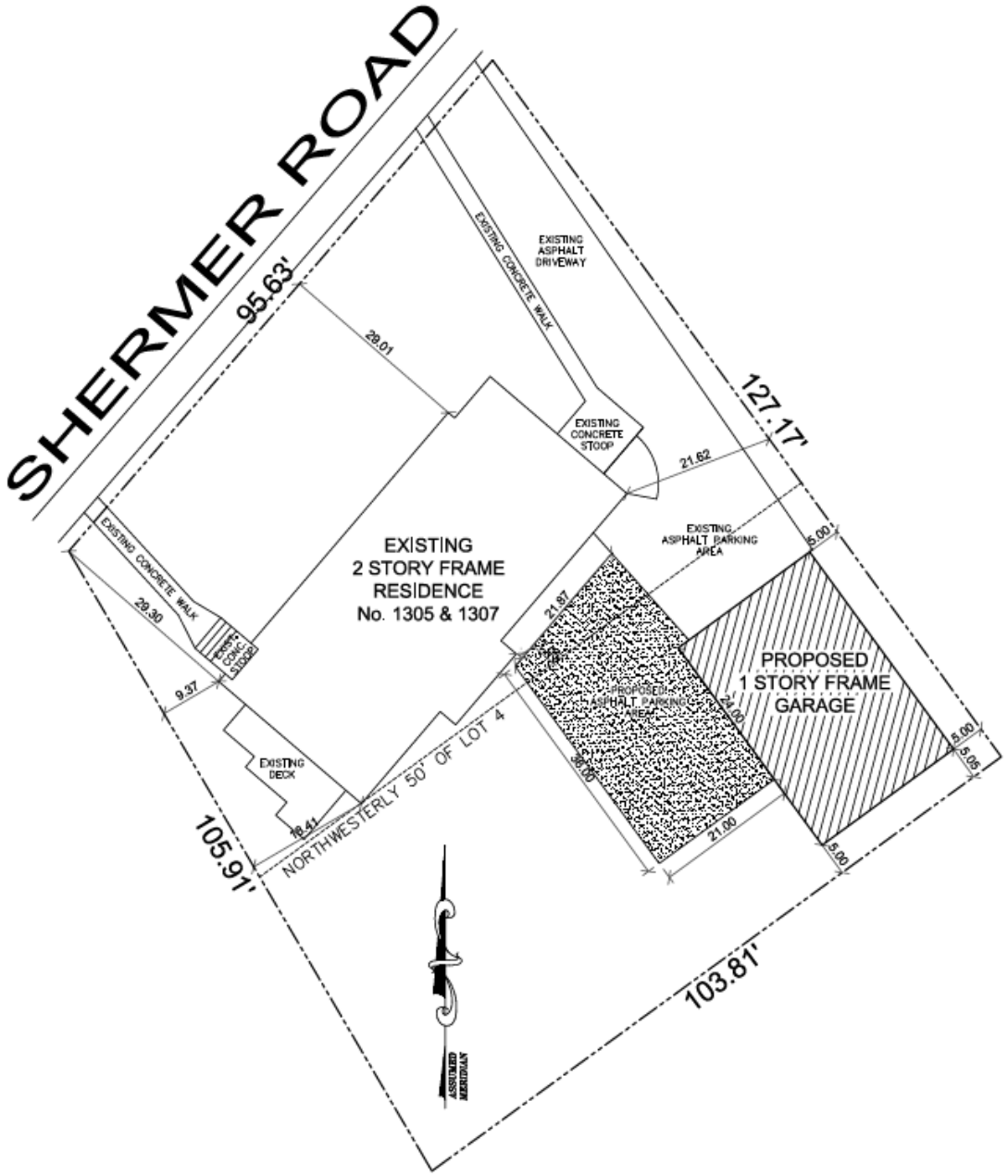

Zoning Relief

Zoning Relief

Preface: The property is located within the Village Green Overlay (VGO). All variation requests involving the VGO are reserved for the Board of Trustees to review and decide.

The requests include

- Reduction of the rear yard setback to 5 feet
- Increase garage height to 17 feet to accommodate the peak of the required pitched roof.
    - The C-1 district does not allow for flat roofs



Variance Standards

Variance Standards

General Standards with Staff Comments

a) Consistent with Code and Plan Purposes:

The code sets forth regulations regarding parking and loading requirements. One such category, Design and Maintenance, Location on Lot (9-104 C. 1.), requires that off-street parking such as a garage shall comply with the yard requirements for that particular district with regards to exceptions in the Single Family Residential. Given that this lot mimics a single-family residential lot in several ways, a detached garage could allow for a 5-foot rear yard setback requirement without impacting the surrounding area as such is allowed in Single-Family Residential Districts.

b) No Undue Adverse Impact:

The proposed detached garage is not expected to create unreasonable or negative impacts on the property or the surrounding area.

c) Compatible with Surrounding Area:

The subject property and the construction of a detached garage within the rear yard setback is comparable to what is allowed in the abutting residential districts.

Variance Standards

d) Adequate Public Facilities:
Not applicable.

e) No Traffic Congestion:
Not applicable.

f) No Destruction of Significant Features:
Not applicable.

g) Compliance with Standards:
The project otherwise complies with the zoning requirements.

h) Quality Design and Construction:

The proposed construction will meet the design and construction standards, which are to be confirmed with final inspections.

August 12, 2025

1307 Shermer Road: Zoning Variances within the Village Green Overlay District

Northbrook Board of Trustees Meeting

MEMORANDUM

To: Village Manager Cara Pavlicek
From: Director of Development and Planning Services Amy McEwan
Date: 2025-08-12
Subject: An Ordinance Granting Variations For Building Height And Yard Setback For A Detached Garage And Parking Improvements In C-1/VGO District (1307 Shermer Road) (Docket No. BOT-25-11)

Overview
Consideration of an Ordinance to approve variations for building height and yard setback requirements for a detached garage and parking improvements in C-1/VGO District.

Fiscal Impact
N/A.

Recommendation
Approval.

Background

The applicant, Ira Holtzman, owner of the property at 1307 Shermer Road, has requested the following zoning relief for a detached garage and associated parking improvements in the C-1 Specialty Commercial District/Village Green Overlay District:

A. a variation to reduce the required rear yard setback from 50 feet to 5 feet for a proposed detached garage; and
B. a major variation to increase the maximum height for a detached garage not to exceed 17 feet.

Section 8-111 of the Zoning Code states that the Board of Trustees reserves the right to review and decide on variation requests for properties within the Village Green Overlay (VGO) District, stating – "*Whenever an application for a variation concerning property located within the Village Green Overlay District is filed pursuant to this Code or the Village Subdivision and Development Code (1991), the authority to hear and decide the application otherwise delegated to the Zoning Board of Appeals pursuant to Section 11-503 of this Code shall be reserved to the Board of Trustees. For such purposes, the Board of Trustees shall have all the authority granted to, and shall be subject to all the limitations imposed on, the Zoning*

Board of Appeals pursuant to Section 11-503 of this Code".

On August 12, 2025, following the Public Hearing, the Board will consider an Ordinance, which if approved, would grant Variations for the subject property located in the C-1 Specialty Commercial District/ Village Green Overlay (VGO). There is one written public comment received stating their concern regarding the location and size of the proposed garage, which is attached.

In reviewing this request, we suggest the Board consider the following questions:

1. Are the proposed improvements compatible with the adjacent single-family district?
2. Is it appropriate to grant a variation to reduce the required rear yard setback from 50 feet to 5 feet for a proposed detached garage and at-grade parking pad?
3. Is it appropriate to grant a variation to increase the maximum height for a detached garage not to exceed 17 feet?

The subject property currently has a structure which was originally a single-family residence and now is a mixed-use building, with commercial use on the first floor and residential on the second floor. The applicant has proposed a single-story detached garage with parking adjacent in the rear (south) of the property. The proposed garage and parking area does not comply with the required rear yard and setback requirement of the C-1/VGO District. The detached garage does not comply with maximum height requirement of fifteen feet for the accessory structure in the C-1/VGO District. A staff zoning analysis, project details, and Standards for variations of the request is attached. Also attached is a narrative and plans from the applicant.

The proposed improvements attempt to address parking needs while maintaining the residential character. This following excerpt conveys the intent of the underlying zoning district as stated in the Zoning Code (5-101),

"…the C-1 Specialty Commercial District is intended to provide for small shops, stores and boutiques in the older areas of the Village adjacent to the central business areas where it is possible to retain the residential character and appearance of the Village and at the same time promote business activity. The regulations are designed to encourage the retention and renovation of sound existing structures and to ensure that the business uses remain compatible with the residential uses while permitting the area to maintain a distinctive character".

The applicant and staff will attend the August 12, 2025 meeting in case there are any questions.

An Ordinance Granting Variations For Building Height And Yard Setback For A Detached Garage And Parking Improvements In C-1_VGO District (1307 Shermer Road)
Exhibit A-C - 1307 Shermer
Supplemental - Applicant Submittal - 1307 Shermer

ORDINANCE NO. 2025-__

AN ORDINANCE GRANTING
VARIATIONS FOR BUILDING HEIGHT AND YARD SETBACK FOR A DETACHED GARAGE
AND PARKING IMPROVEMENTS IN C-1/VGO DISTRICT
(1307 SHERMER ROAD)
(DOCKET NO. BOT-25-11)

Passed by the Board of Trustees, _____, 2025

Printed and Published, _____, 2025

Printed and Published in Pamphlet Form
by Authority of the
President and Board of Trustees

VILLAGE OF NORTHBROOK
COOK COUNTY, ILLINOIS

I hereby certify that this document
was properly published on the date
stated above.

_____
Village Clerk

ORDINANCE NO. 2025-__

BE IT ORDAINED by the Board of Trustees of the Village of Northbrook, County of Cook and State of Illinois THAT:

AN ORDINANCE GRANTING
VARIATIONS FOR BUILDING HEIGHT AND YARD SETBACK FOR A DETACHED GARAGE AND PARKING IMPROVEMENTS IN C-1/VGO DISTRICT
(1307 SHERMER ROAD)

shall be, and is hereby, adopted as follows:

Section 1. BACKGROUND.

Ira Holtzman ("***Applicant***") is the owner of the property commonly known as 1307 Shermer Road ("***Property***"). There is one two-story structure, where the first floor is commercial and the second floor is occupied by residential use.

The Applicant has requested relief from the requirements of the Zoning Code, including the approval of (i) a variation to reduce the required rear yard setback from 50 feet to 5 feet for a proposed detached garage; and (iv) a major variation to increase the maximum height for a detached garage not to exceed 17 feet (collectively, the "***Requested Relief***").

The Board of Trustees hereby find that it is in the best interest of the Village and the public to adopt the Requested Relief in accordance with the Zoning Code and pursuant to the Village's home rule powers.

Section 2. DESCRIPTION OF PROPERTY.

The Property is commonly known as 1307 Shermer Road and legally described in ***Exhibit A*** attached to and, by this reference, made a part of this Ordinance. The Property is located in the Village Green Overlay ("***VGO***") District and the C-1 Specialty Commercial District.

Section 3. PUBLIC MEETING AND PUBLIC HEARING.

In accordance with the requirements for a variation in the Village Green Overlay District as set forth in Section 8-111 of the Northbrook Zoning Code (1988), as amended ("***Zoning Code***"), a duly noticed public hearing to consider the variations was held at the Board of Trustee's regular meeting on August 12, 2025, during which the Board recommended approval of the requested variations.

Section 4. VARIATIONS.

Subject to, and contingent upon, the conditions, restrictions, and provisions set forth in Section 5 of this Ordinance, the Property shall be, and is hereby granted the following variations, all in accordance with and pursuant to Section 11-503 of the Zoning Code and the home rule powers of the Village of Northbrook:

a) a variation to reduce the required rear yard setback from 50 feet to 5 feet for the proposed detached garage; and

b) a major variation to increase the maximum height for the detached garage not to exceed 17 feet.

Section 5. CONDITIONS

The variations granted in Section 4 are expressly subject to and contingent upon compliance with the Plans for the Property, which consist of two sheets, prepared by Town Studios Inc., dated June 16, 2025, a copy of which is attached to, and by this reference made a part of, this Ordinance as ***Exhibit B*** ("***Plans***").

Section 6. FAILURE TO COMPLY WITH CONDITIONS.

Upon failure or refusal of the Applicant to comply with any or all of the conditions, restrictions or provisions of this Ordinance, the variations granted in Section 4 of this Ordinance shall, at the sole discretion of the Village Board of Trustees, by ordinance duly adopted, be revoked and become null and void; provided, however, that the Village Board of Trustees may not so revoke the variations unless it shall first provide the Applicant with two months advance written notice of the reasons for revocation and an opportunity to be heard at a regular meeting of the Board of Trustees. In the event of revocation, the development and use of the Property shall be governed solely by the regulations of the Village Green Overlay District and the C-1 Specialty Commercial District, as the same may, from time to time, be amended. Further, in the event of such revocation, the Village Manager and Village Attorney are hereby authorized and directed to bring such zoning enforcement action as may be appropriate under the circumstances.

Section 7. EFFECTIVE DATE.

A. This Ordinance shall be effective only upon the occurrence of all of the following events:

i. passage by the Board of Trustees of the Village of Northbrook by a majority vote in the manner required by law;

ii. publication in pamphlet form in the manner required by law; and

iii. the filing by the Applicant with the Village Clerk of an unconditional agreement and consent to accept and abide by each and all of the terms, conditions, and limitations set forth in this Ordinance. Said unconditional agreement and consent shall be in the form of ***Exhibit C***, attached to and made a part of this Ordinance by this reference.

B. In the event that the Applicant does not file with the Village Clerk a fully executed copy of the unconditional agreement and consent referenced in Paragraph 7.A.iii of this Ordinance within 90 days after the date of passage of this Ordinance by the Board of Trustees, the corporate authorities shall have the right, in their sole discretion, to declare this Ordinance null and void and of no force or effect.

PASSED: This ___ day August, 2025.

AYES: ()

NAYS: ()

ABSENT: ()

ABSTAIN: ()

_____
Village President

ATTEST:

_____
Village Clerk

EXHIBIT A

Legal Description of Property

LOT 3 AND THE NORTHWESTERLY 50.0 FEET OF LOT 4, EXCEPT THE SOUTHWESTERLY 40 FEET THEREOF, ALSO EXCEPT THE NORTHEASTERLY 152.90 FEET THEREOF MEASURED ALONG THE NORTHWESTERLY LINE OF THE NORTHWESTERLY 50 FEET OF LOT 4, IN GEORGE A. KIEST'S SUBDIVISION OF BLOCKS 2 AND 4 BEING A SUBDIVISION OF THE WEST ½ OF THE SOUTHWEST ¼ OF SECTION 10, TOWNSHIP 42 NORTH RANGE 12, EAST OF THE THIRD PRINCIPAL MERIDIAN, RECORDED JANUARY 14, 1893 AS DOCUMENT NUMBER 1801047 IN COUNTY OF COOK AND THE STATE OF ILLINOIS.

Commonly known as 1307 Shermer Road, Northbrook, Illinois 60062

PIN: 04-103-02-032-0000 and 04-103-02-034-0000

EXHIBIT B

Plans

EXHIBIT C

Unconditional Agreement and Consent of Applicant

TO: The Village of Northbrook, Illinois (***"Village"***):

WHEREAS, Ira Holtzman ("***Applicant***") is the owner of the property commonly known as 1307 Shermer Road ("***Property***").

WHEREAS, Applicant has requested approval of variations to the building height and yard setback requirements for a detached garage and parking improvements.

WHEREAS, Ordinance No. 2025-__, adopted by the Board of Trustees of the Village of Northbrook on _____, 2025 ("***Ordinance***"), grants approval of such relief, subject to certain conditions, for the benefit of Applicant; and

WHEREAS, Applicant desires to evidence to the Village their unconditional agreement and consent to accept and abide by each of the terms, conditions, and limitations set forth in said Ordinance;

NOW, THEREFORE, Applicant does hereby agree and covenant as follows:

1. Applicant shall, and does hereby unconditionally agree to, accept, consent to and abide by all of the terms, conditions, restrictions, and provisions of that certain Ordinance No. 2025-__, adopted by the Village Board of Trustees on _____, 2025.

2. Applicant acknowledges and agrees that the Village is not and shall not be, in any way, liable for any damages or injuries that may be sustained as a result of the Village's review and approval of any plans for the Property, or the issuance of any permits for the use and development of the Property, and that the Village's review and approval of any such plans and issuance of any such permits does not, and shall not, in any way, be deemed to insure Applicant against damage or injury of any kind and at any time.

3. Applicant acknowledges that the public notices and hearings have been properly given and held with respect to the adoption of the Ordinance, has considered the possibility of the revocation provided for in the Ordinance, and agrees not to challenge any such revocation on the grounds of any procedural infirmity or any denial of any procedural right, provided that the notice to Applicant required by Section 6 of the Ordinance is given.

4. Applicant agrees to and does hereby hold harmless and indemnify the Village, the Village's corporate authorities, and all Village elected and appointed officials, officers, employees, agents, representatives, and attorneys, from any and all claims that may, at any time, be asserted against any of such parties in connection with (a) the Village's review and approval of any plans and issuance of any permits, (b) the procedures followed in connection with the adoption of the Ordinance, (c) the development, construction, maintenance, and use of the Property, and (d) the performance by Applicant of their obligations under this Unconditional Consent and Agreement.

5. Applicant shall, and does hereby agree to, pay all expenses incurred by the Village in defending itself with regard to any and all of the claims mentioned in this

Unconditional Consent and Agreement. These expenses shall include all out-of-pocket expenses, such as attorneys' and experts' fees, and shall also include the reasonable value of any services rendered by any employees of the Village.

6. Applicant warrants and represents to the Village that it owns fee simple title to the Property and consents to the recording of the Ordinance against the Property.

ATTEST:

By:_____

Its: _____

Ira Holtzman

By:_____

Its:_____

SUBSCRIBED and **SWORN** to
before me this _____ day of
_____, 2025.

_____
Notary Public

EXHIBIT A

Legal Description of Property

LOT 3 AND THE NORTHWESTERLY 50.0 FEET OF LOT 4, EXCEPT THE SOUTHWESTERLY 40 FEET THEREOF, ALSO EXCEPT THE NORTHEASTERLY 152.90 FEET THEREOF MEASURED ALONG THE NORTHWESTERLY LINE OF THE NORTHWESTERLY 50 FEET OF LOT 4, IN GEORGE A. KIEST'S SUBDIVISION OF BLOCKS 2 AND 4 BEING A SUBDIVISION OF THE WEST ½ OF THE SOUTHWEST ¼ OF SECTION 10, TOWNSHIP 42 NORTH RANGE 12, EAST OF THE THIRD PRINCIPAL MERIDIAN, RECORDED JANUARY 14, 1893 AS DOCUMENT NUMBER 1801047 IN COUNTY OF COOK AND THE STATE OF ILLINOIS.

Commonly known as 1307 Shermer Road, Northbrook, Illinois 60062

PIN: 04-103-02-032-0000 and 04-103-02-034-0000

EXHIBIT B

Plans

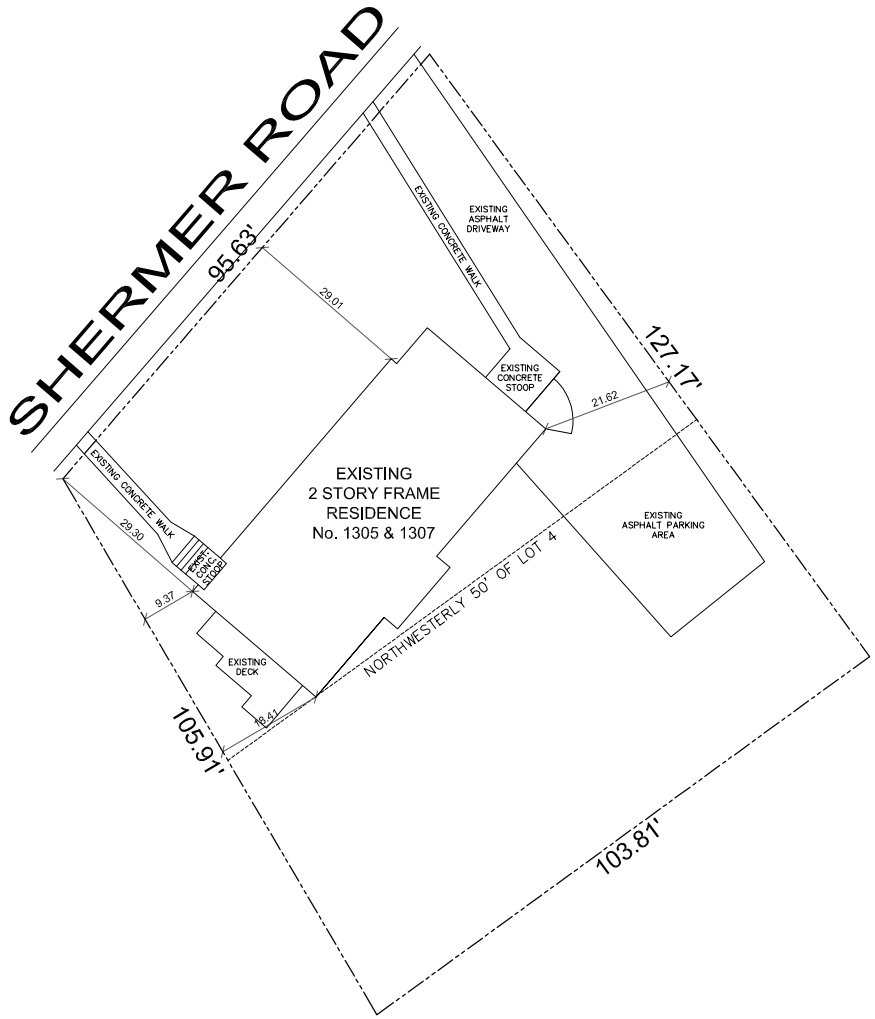

01 EXISTING SITE PLAN

SCALE: 1" = 10'-0"

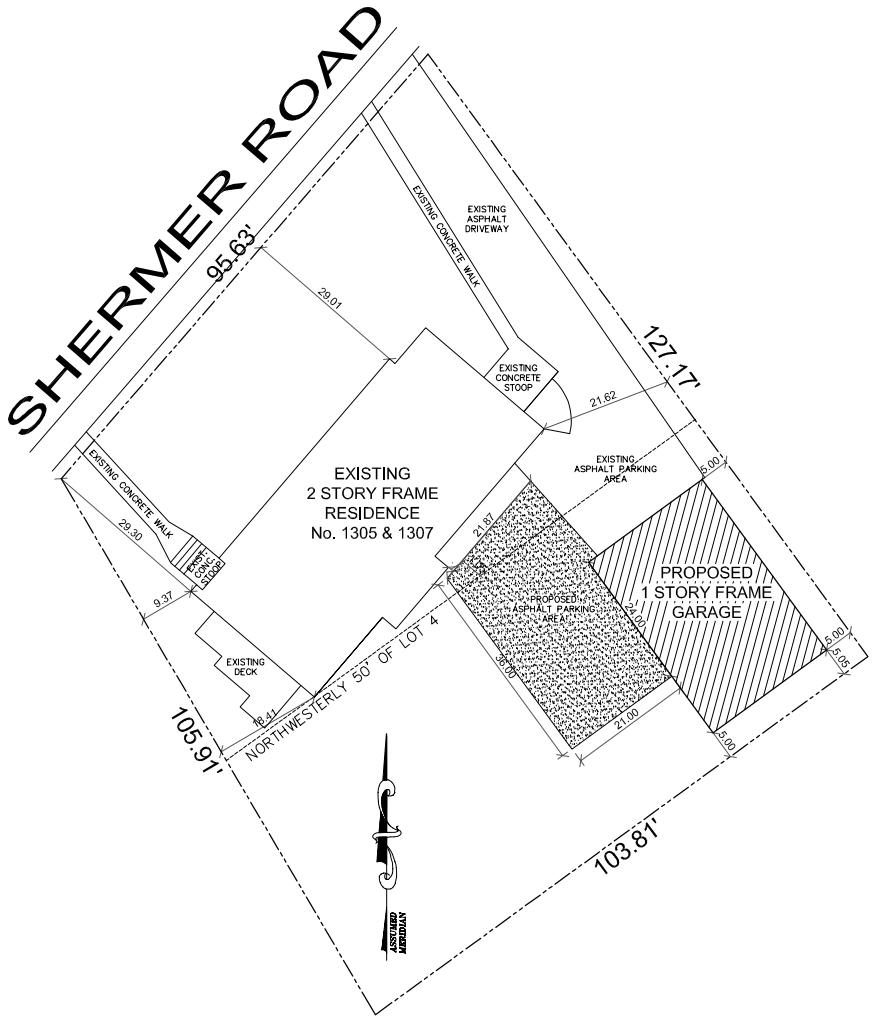

02 PROPOSED SITE PLAN

SCALE: 1" = 10'-0"

LOT AREA = 11,394 S.F.

GROSS FLOOR AREA (FAR):	EXISTING	PROPOSED	TOTAL (SF)
FIRST FLOOR	1693.78	0	1693.78
SECOND FLOOR	945.00	0	945.00
DETACHED GARAGE	0	864.00	864.00
	TOTAL FLOOR AREA		3,502.78 SF
		3502.78 / 11,394 (TOTAL BUILDING AREA / LOT AREA)	= 30.74% (FAR) (FLOOR AREA RATIO)

MAXIMUM BUILDING COVERAGE	EXISTING	PROPOSED	TOTAL (SF)
FIRST FLOOR	1693.78	0	1693.78
DETACHED GARAGE	0	864.00	864.00
	TOTAL BUILDING AREA		2,557.78 SF
		2557.78 / 11,394 (TOTAL BUILDING AREA / LOT AREA)	= 22.44% (BLDG. COVERAGE RATIO)

MAX. LOT COVERAGE (IMPERV. SURFACE)	EXISTING	PROPOSED	TOTAL (SF)
BUILDING FOOTPRINT	1693.78	0	1693.78
DETACHED GARAGE	0	864.00	864.00
DRIVEWAY	1622.88	442.22	2065.10
WALKS / STOOPS	314.18	0	314.18
DECK / PATIO	138.25	0	138.25
TOTAL IMPERVIOUS SURFACE AREA	3,769.09	1,306.22	5,075.31
		5075.31 / 11,394 (TOTAL IMPERVIOUS SURFACE AREA / LOT AREA)	= 44.54% (IMPERVIOUS SURFACE RATIO)

TOWN STUDIOS, INC.

1297 SHERMER ROAD
NORTHBROOK, ILLINOIS 60062

PHONE: 847-498-0900
WWW.TOWNSTUDIOS.COM

HOTLZMAN RESIDENCE
DETACHED GARAGE ADDITION
1305-1307 SHERMER ROAD
NORTHBROOK, ILLINOIS 60062

DATE:
6-10-25

SHEET NO.
A-1
OF 2 SHEETS

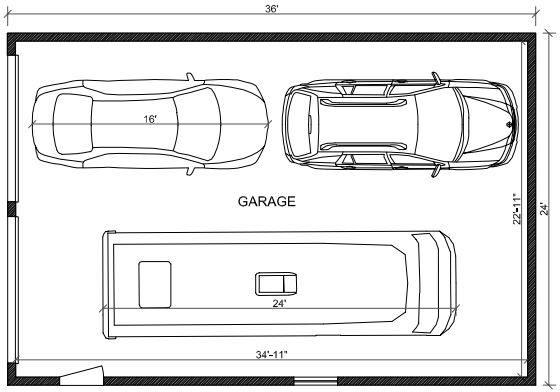

01 PROPOSED GARAGE PLAN
SCALE: 1/4" = 1'-0"

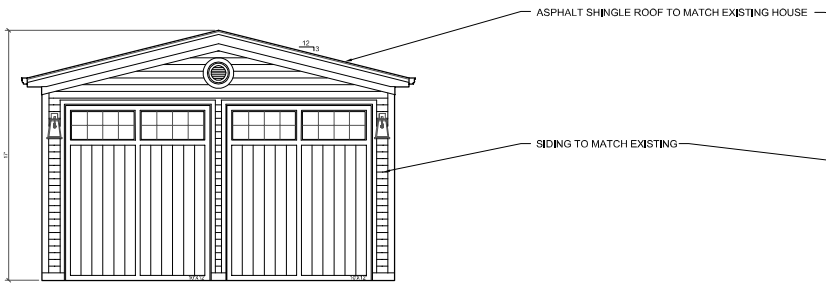

02 PROPOSED NORTHWEST ELEVATION (FACING SHERMER)
SCALE: 1/4" = 1'-0"

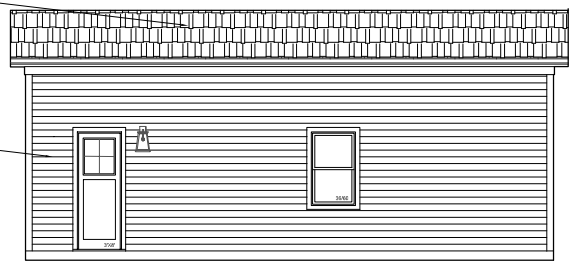

03 PROPOSED SOUTHWEST ELEVATION (RIGHT SIDE)
SCALE: 1/4" = 1'-0"

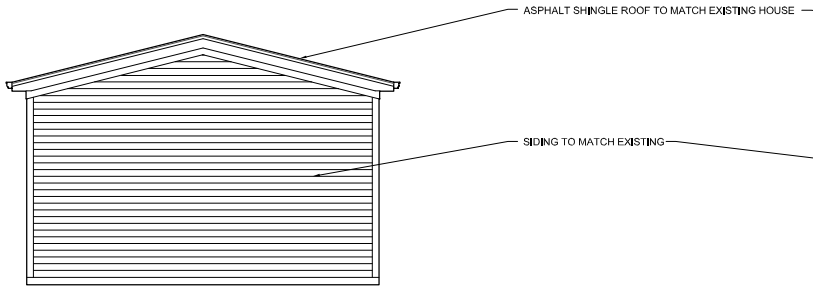

04 PROPOSED SOUTHEAST ELEVATION (REAR)
SCALE: 1/4" = 1'-0"

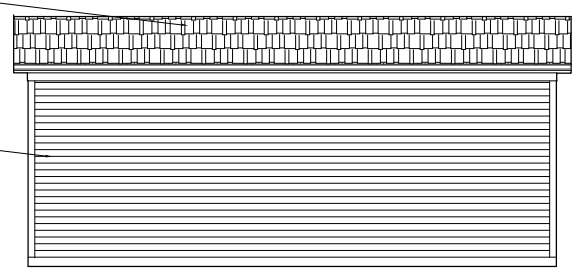

05 PROPOSED NORTHAST ELEVATION (LEFT SIDE)
SCALE: 1/4" = 1'-0"

SHEET NO. A-2 OF 2 SHEETS

DATE: 6-10-25

HOTLZMAN RESIDENCE
DETACHED GARAGE ADDITION
1305-1307 SHERMER ROAD
NORTHBROOK, ILLINOIS 60062

TOWN STUDIOS, INC.
1297 SHERMER ROAD
NORTHBROOK, ILLINOIS 60062
PHONE: 847-498-0900
WWW.TOWNSTUDIOS.COM

EXHIBIT C

Unconditional Agreement and Consent of Applicant

TO: The Village of Northbrook, Illinois (***"Village"***):

WHEREAS, Ira Holtzman ("***Applicant***") is the owner of the property commonly known as 1307 Shermer Road ("***Property***").

WHEREAS, Applicant has requested approval of variations to the building height and yard setback requirements for a detached garage and parking improvements.

WHEREAS, Ordinance No. 2025-__, adopted by the Board of Trustees of the Village of Northbrook on _____, 2025 ("***Ordinance***"), grants approval of such relief, subject to certain conditions, for the benefit of Applicant; and

WHEREAS, Applicant desires to evidence to the Village their unconditional agreement and consent to accept and abide by each of the terms, conditions, and limitations set forth in said Ordinance;

NOW, THEREFORE, Applicant does hereby agree and covenant as follows:

1. Applicant shall, and does hereby unconditionally agree to, accept, consent to and abide by all of the terms, conditions, restrictions, and provisions of that certain Ordinance No. 2025-__, adopted by the Village Board of Trustees on _____, 2025.

2. Applicant acknowledges and agrees that the Village is not and shall not be, in any way, liable for any damages or injuries that may be sustained as a result of the Village's review and approval of any plans for the Property, or the issuance of any permits for the use and development of the Property, and that the Village's review and approval of any such plans and issuance of any such permits does not, and shall not, in any way, be deemed to insure Applicant against damage or injury of any kind and at any time.

3. Applicant acknowledges that the public notices and hearings have been properly given and held with respect to the adoption of the Ordinance, has considered the possibility of the revocation provided for in the Ordinance, and agrees not to challenge any such revocation on the grounds of any procedural infirmity or any denial of any procedural right, provided that the notice to Applicant required by Section 6 of the Ordinance is given.

4. Applicant agrees to and does hereby hold harmless and indemnify the Village, the Village's corporate authorities, and all Village elected and appointed officials, officers, employees, agents, representatives, and attorneys, from any and all claims that may, at any time, be asserted against any of such parties in connection with (a) the Village's review and approval of any plans and issuance of any permits, (b) the procedures followed in connection with the adoption of the Ordinance, (c) the development, construction, maintenance, and use of the Property, and (d) the performance by Applicant of their obligations under this Unconditional Consent and Agreement.

5. Applicant shall, and does hereby agree to, pay all expenses incurred by the Village in defending itself with regard to any and all of the claims mentioned in this Unconditional Consent and Agreement. These expenses shall include all out-of-pocket expenses, such as attorneys' and experts' fees, and shall also include the reasonable value of any services rendered by any employees of the Village.

6. Applicant warrants and represents to the Village that it owns fee simple title to the Property and consents to the recording of the Ordinance against the Property.

ATTEST:

By:_____

Its: _____

Ira Holtzman

By:_____

Its:_____

SUBSCRIBED and **SWORN** to
before me this _____ day of
_____, 2025.

_____
Notary Public

Village of Northbrook Zoning Board

Hardship Letter for 1305-07 Shermer Road

We are requesting a zoning variance to construct a garage at the back of our property for my RV and two cars. We are currently zoned C1 but our property is residential as well as the properties around us. C1 zoning requires a 50 foot set back. This would prohibit us from constructing a garage. We therefore request the variance to comply with residential zoning which would require only a 5 foot set back.

This garage would satisfy each of the standards of subsection 11-503F.

1. General Standard 50 ft set back creates a hardship
2. Unique Physical Condition surrounding property is residential
3. Not Self-Created Not the result of any action of the owner
4. Denied Substantial Rights This would deny substantial rights enjoyed by other owners.
5. Not Merely Special Privilege We are not requesting any special privileges.
6. Code and Plan Purposes the garage would be in harmony with the general specific purposes of the code.
7. Essential Character of the Area the variation would comply with all items listed 7 a) thru f)
8. No Other Remedy there is no other means the garage can be built without a zoning variance.

Thank you for your consideration.

Sincerely

Ira Holtzman

847-340-3300

Development and Planning Services
1225 Cedar Lane Northbrook, Illinois 60062
TELEPHONE: 847/664-4055; EMAIL: richard.peters@northbrook.il.us
www.northbrook.il.us

northbrook

Zoning Board of Appeals

Application for Variations and Exceptions

APPLICATION REQUIREMENTS: As part of this formal application for a variation or exception, the applicant must submit all of pertinent information prior to the scheduling of a public hearing. ***Please note***: If any of the required information below is missing by the application deadline, you will not be permitted to proceed with the public hearing for the following month. You will be required to first submit all required materials and then apply to appear at the next available hearing. A **preliminary application submittal must be arranged with the Zoning Administrator at least one week prior to the deadline to ensure all is in order and allow time to make revisions if necessary prior to the final submittal cutoff. Applications Will Not Be Accepted Without This Required Step.** A copy of the notice of hearing, which is published in the local newspaper, will be mailed to the applicant. The notice must be mailed certified mail return receipt to all owners of properties within 250 feet of the subject property (excluding rights-of-way) and must be made not less than 15 days or more than 30 days prior to the hearing.

ADDRESS: 1307 Shermer Rd **ZBA DOCKET:**

☐ **Zoning Application Fee, payable to the "Village of Northbrook" (if check):**

Non-Refundable Fee	
Residential.....	$350.00*
....Non-Residential.....	$600.00

*An additional $100 non-refundable fee will be applied for each applicant-requested continuance

☐ **Application** – Completed in its entirety

☐ **Zoning Worksheet or Fence Application**

☒ **Letter of Hardship**
Explain in detail the requested variation/exception, the characteristics of the property that prevent compliance with said Code provision, and a statement of how the variation sought would satisfy each of the standards set forth in either Subsection 11-503F or 11-505A of the Zoning Code (attached).

☒ **Plat of Survey Drawn to Scale**
- Legal description of property must be shown
- Plat must be dated and stamped by surveyor
- A mortgage/real estate survey is not acceptable

☐ **Site Plan Drawn to Scale**
- Prepared by the architect or surveyor detailing all building improvements and impervious areas, lot line dimensions, accessory structures, easements and all public and private right of ways.
- The site plan shall indicate the location of the proposed improvement requiring variation approval, highlighting the area of the setback encroachment.
- Dimensions/setbacks from all sides of the building to all adjacent lot lines must be shown.

****All materials must be submitted electronically, either via email attachments or on a thumb drive. Shared files and third party websites will not be accepted.**

☐ **Building Plans Drawn to Scale**
- Dated and stamped by an architect
- Existing and proposed floor plans with room names and dimensions, along with a clear outline of what is existing, what is new and which walls will be removed. The entire floor where the variation is requested must be shown. The floor plan must also show doors and windows.
- Existing and proposed elevations for all sides affected (at least 3) including building/ridge height, proposed roof slope pitch and existing and proposed exterior finishes.

☒ **Tree Survey**
Regardless of the proposed work, submit a tree survey showing all existing trees with diameter at breast height (DBH). A hand drawing of tree locations on a plat of survey is usually acceptable.

☒ **Proof of Ownership**
- Only a ***Warranty deed*** or ***owner's title policy*** in its entirety.
- If the property is held in trust, the Trust Agreement in its entirety.
- If petitioner is contract purchaser or lessee, notarized proof of authority to file on behalf of the owner is required.

☒ **Affidavit of Survey (Attached)**
Required for all surveys over one year old.

☒ **Other Exhibits Recommended**
- Photos, letters of support from adjacent neighbors, etc...

Requested Action

- ☐ Yard or Setback Variation
- ☐ Fence Height Exception
- ☐ Parking/Loading Reduction
- ☐ Increase in Accessory Building Height
- ☐ Tennis Court Illumination
- ☐ Increase Maximum No. of Signs
- ☐ Pre-code Structure Moving or Restoration
- ☒ Other Garage

Brief Description of Variation or Exception Request 5 foot setbacks from property line and garage height

Applicant Information

Applicant Name/Company: Ira Holtzman / I+A Holdings LLC
Address: 1307 Shermer Rd
City: Northbrook **State:** IL **Zip:** 60062
Telephone (847) 340-3300 **Email:** iholtzman@aol.com

Primary Contact Person

Name/Company: Ira Holtzman
Address: 1307 Shermer Rd
City: Northbrook **State:** IL **Zip:** 60062
Telephone (847) 340-3300 **Email:** iholtzman@aol.com

Property Information

Site Location/Address: 1305-07 Shermer Rd
Real Estate Index Nos.: 04-10-302-032-0000, 04-10-302-034-0000
Size of Property: 11,394 **(square feet acres)**
Current Zoning: C1 **Current Use:** Office 1st Floor Apartment 2nd Floor
Is any portion of the property within the 100-year floodplain? Yes: X No ____

Northbrook Ethics Code *(Potential conflicts of interest.)*
On a separate sheet of paper, list the name, address and nature and extent of any current or potential interest that any Village officer or employee may have in or with respect to the owner, the applicant or the property. **If none, check here:** X (For more information, see Sections 2-71 through 2-85 of the Northbrook Municipal Code.)

Repeat Application
Has any other application for this property been submitted to the Village and denied within the last two years? _____ yes ___ no X
If yes, attach a statement of the grounds justifying reconsideration (See Zoning Code Sec. 11-302).

Applicant/Owner Acknowledgments
By execution of this application in the space provided below, the Applicant and Owner(s) do hereby certify, acknowledge, agree and affirm to the Village of Northbrook that:

1. The Village and its representatives have the right, and are hereby granted permission and license, to enter upon the property, and into any structures located thereon, for purposes of conducting any inspections that may be necessary in connection with this application.

2. I (We) have carefully read this application, the Northbrook Zoning Code and Northbrook Subdivision & Development Code and fully understand the terms and provisions of each.

3. I (We) waive any rights to exemption from disclosure under the Illinois Freedom of Information Act of any and all documents and information submitted in connection with this application.

4. I (We), in accordance with the requirements of the Annual Fee Ordinance, the Northbrook Zoning Code and the Northbrook Subdivision & Development Code, agree to pay all applicable filing fees and be responsible for the payment of all reimbursable expenses associated with the processing of this application.

Applicants may attach additional materials or exhibits to this application if necessary or helpful in explaining the relief requested.

Signature of Applicant _____ Date 6/12/25

Signatures of Owner(s) _____ Date 6/12/25

_____ Date 6/12/25

Consultants (as applicable)

Attorney

Name _____
Company _____
Address _____
City, State, Zip _____
Phone No. _____
Email _____

Planning/Landscape Architect

Name Cliff Town
Company Town Studios Inc.
Address 1297 Shermer Rd
City, State, Zip Northbrook IL 60062
Phone No. 847 498-0900
Email Cliff@townstudios.com

Civil Engineer

Name _____
Company _____
Address _____
City, State, Zip _____
Phone No. _____
Fax No. _____
E-mail _____

Other

Name _____
Company _____
Address _____
City, State, Zip _____
Phone No. _____
Fax No. _____
E-mail _____

Site Ownership and Control

List all legal and beneficial owners and their current mailing addresses:

Isa Holtzman 1307 Shermer Rd Northbrook, IL 60062
William Schloss 1307 Shermer Rd Northbrook, IL 60062

Attach a copy of a document showing ownership of the property **and, if different,** the applicant's ownership, control of or interest in the property (Title Policy, real estate contract, deed, etc.). If property is in a trust, attach a certified copy of the trust agreement. (Check which documents are attached)

☐ **Title Policy**

☐ **Trust Agreement**

☒ **Deed**

PLAT OF SURVEY

OF

LOT 3 AND THE NORTHWESTERLY 50.0 FEET OF LOT 4, EXCEPT THE SOUTHWESTERLY 40 FEET THEREOF. ALSO EXCEPT THE NORTHEASTERLY 152.90 FEET THEREOF MEASURED ALONG THE NORTHWESTERLY LINE OF THE NORTHWESTERLY 50 FEET OF LOT 4, IN GEORGE A. KIEST'S SUBDIVISION OF BLOCKS 2 AND 4 BEING A SUBDIVISION OF THE WEST ½ OF THE SOUTHWEST ¼ OF SECTION 10, TOWNSHIP 42 NORTH, RANGE 12 EAST OF THE THIRD PRINCIPAL MERIDIAN, RECORDED JANUARY 14, 1893 AS DOCUMENT NUMBER 1801047 IN COUNTY OF COOK AND THE STATE OF ILLINOIS.

COMMONLY KNOWN AS: 1305 &1307 SHERMER AVENUE, NORTHBROOK, ILLINOIS.

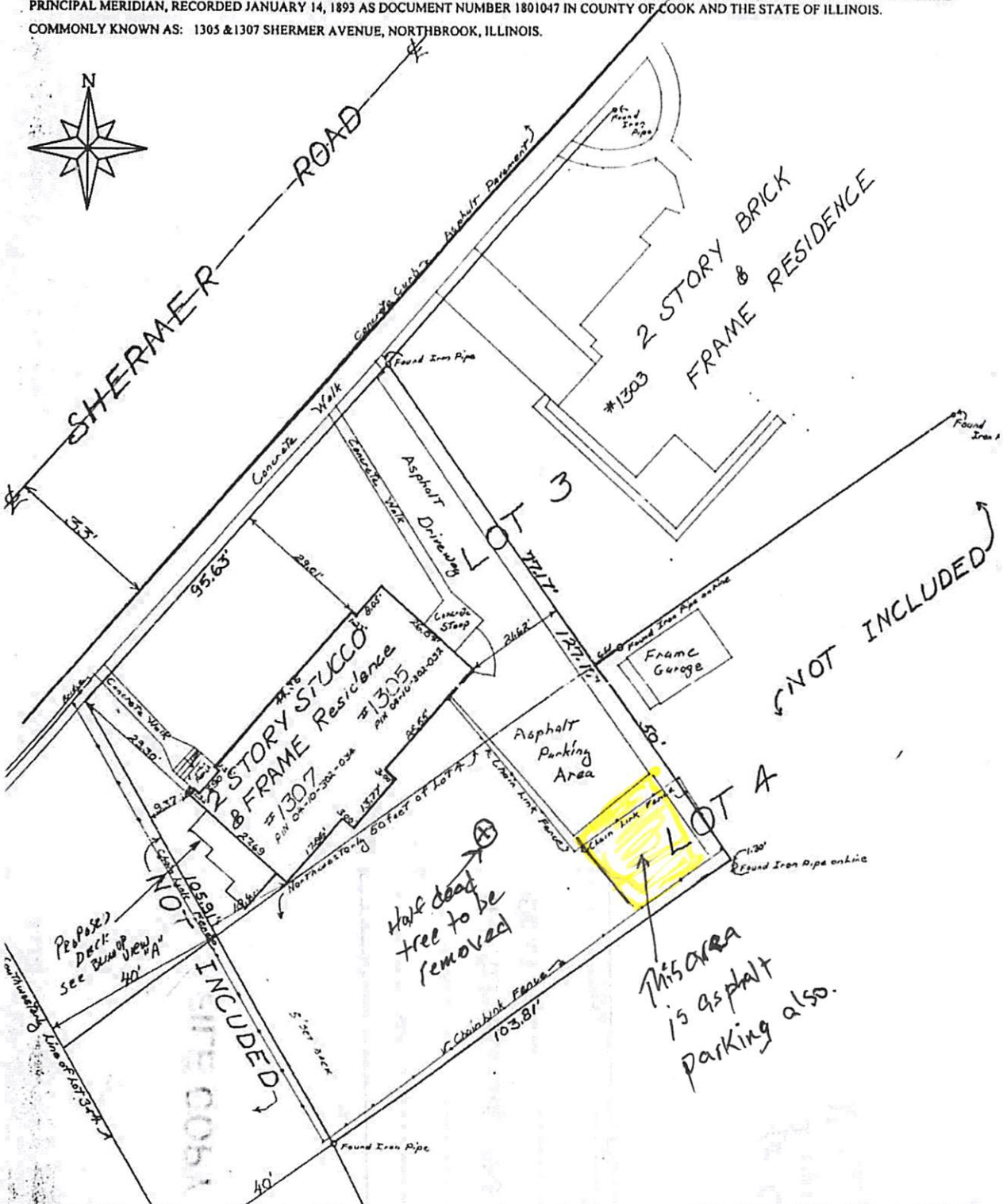

STATE OF ILLINOIS COUNTY OF COOK

Survey completed: The twelfth day of May 1998

S.S.

David Kaminsky Illinois professional Land Surveyor #35-3115 Date

Any discrepancy in measurement should be promptly reported to the surveyor for explanation or correction and no dimension shall be assumed by scale measurement upon this plat. WE DO NOT CERTIFY AS TO LOCATION OF UNDERGROUND UTILITIES OR UNDERGROUND IMPROVEMENTS. FOR EASEMENT, BUILDING LINES AND OTHER RESTRICTIONS NOT SHOWN ON THIS PLAT REFER TO THE ABSTRACT, DEED, CONTRACT, TITLE POLICY AND LOCAL BUILDING REGULATIONS. The Legal Description noted on this plat is a copy of the orders and for accuracy MUST be compared with Deed.

ACCURATE COMPUTERIZED SURVEYING SYSTEMS
CONSULTING LAND SURVEYORS

2222 CENTER AVENUE, NORTHBROOK, ILLINOIS 60062 Tel. (847) 272-2253

Drawn and Surveyed by:	David Kaminsky
Scale:	1"=20'
Ordered by:	Jack Bonke
Job Number:	#980505 N131SHER
Checked by:	S. G.
Data Collector:	MC-V-HA 066022440
Municipality:	Northbrook, Illinois

Development & Planning Services Department
1225 Cedar Lane
Northbrook, Illinois 60062
847-664-4055
www.northbrook.il.us

northbrook

Zoning Board of Appeals

Plat of Survey Affidavit

Required for plats of surveys over one year old

STATE OF ILLINOIS
COUNTY OF COOK

AFFIDAVIT

Ira Holtzman, being first duly sworn upon oath, deposes and states that the Plat of Survey dated 5/12/1998 for the property commonly known as 1305-07 Sherman Rd, Northbrook, Illinois shows all of the structures and impervious surfaces presently on the property, plus additional asphalt parking area. Driveway was extended to the fence.

Affiant

Subscribed and sworn to before me this
12th day of JUNE, 2025.

Notary Public

_____(SEAL)

MICHAEL E TABOR
OFFICIAL SEAL
Notary Public, State of Illinois
My Commission Expires
May 31, 2026

11-503 F. Standards for Variations.

1. General Standard. No variation shall be granted pursuant to this Section unless the applicant shall establish that carrying out the strict letter of the provisions of this Code would create a particular hardship or practical difficulty. Such a showing shall require proof that the variation being sought satisfies each of the standards set forth in this Subsection F.

2. Unique Physical Condition. The subject property is exceptional as compared to other lots subject to the same provision by reason of a unique physical condition, including presence of an existing use, structure or sign, whether conforming or nonconforming; irregular or substandard shape or size; exceptional topographical features; or other extraordinary physical conditions peculiar to and inherent in the subject property that amount to more than a mere inconvenience to the owner and that relate to or arise out of the lot rather than the personal situation of the current owner of the lot.

3. Not Self-Created. The aforesaid unique physical condition is not the result of any action or inaction of the owner or his predecessors in title and existed at the time of the enactment of the provisions from which a variation is sought or was created by natural forces or was the result of governmental action, other than the adoption of this Code, for which no compensation was paid.

4. Denied Substantial Rights. The carrying out of the strict letter of the provision from which a variation is sought would deprive the owner of the subject property of substantial rights commonly enjoyed by owners of other lots subject to the same provision.

5. Not Merely Special Privilege. The alleged hardship or difficulty is not merely the inability of the owner or occupant to enjoy some special privilege or additional right not available to owners or occupants of other lots subject to the same provision, nor merely an inability to make more money from the sale of the subject property; provided, however, that where the standards herein set out exist, the existence of an economic hardship shall not be a prerequisite to the grant of an authorized variation.

6. Code and Plan Purposes. The variation would not result in a use or development of the subject property that would not be in harmony with the general and specific purposes for which this Code and the provision from which a variation is sought were enacted or the general purpose and intent of the Official Comprehensive Plan.

7. Essential Character of the Area. The variation would not result in a use or development on the subject property that:

   a) Would be materially detrimental to the public welfare or materially injurious to the enjoyment, use, development value of property or improvements permitted in the vicinity;
   b) Would materially impair an adequate supply of light and air to the properties and improvements in the vicinity;
   c) Would substantially increase congestion in the public streets due to traffic or parking;
   d) Would unduly increase the danger of flood or fire;
   e) Would unduly tax public utilities and facilities in the area; or
   f) Would endanger the public health or safety.

8. No Other Remedy. There is no means other than the requested variation by which the alleged hardship or difficulty can be avoided or remedied to a degree sufficient to permit a reasonable use of the subject property.

Marc L. Muskat
ATTORNEY AT LAW

TELEPHONE: (847) 564-1391
FAX: (847) 564-2542
email: mkat44@aol.com
2657 WALTERS AVE.
NORTHBROOK, IL 60062

November 23, 2020

Ira Holtzman
Lower Electric, LLC
1301 Shermer Ave.
Northbrook, IL 60062

Dear Ira:

Enclosed is the original Scrivener's Affidavit for 1307 Shermer Ave. that added the second PIN.

For quick background, the transfer document from the Land Trust did not include the second PIN. This was only caught when I went to transfer Bill's interest in the property to his Trust.

Therefore, I had to file a document to correct the original transfer before preparing the Quit Claim Deed for Bill's interest. This recent filing should also take care of any issues that may arise for your LLC interest in the future.

I have enclosed a copy for Bill.

If you have any questions, please let me know.

Sincerely,

Marc L. Muskat

Cc: Bill Schloss

2032306082

Doc# 2032306082 Fee $93.00

RHSP FEE:$9.00 RPRF FEE: $1.00

EDWARD M. MOODY

COOK COUNTY RECORDER OF DEEDS

DATE: 11/18/2020 10:23 AM PG: 1 OF 3

SCRIVENER'S AFFIDAVIT

Prepared By: (Name & Address)

MARC L. MUSKAT
2657 WALTERS AVE.
NORTHBROOK, IL 60062

Property Identification Number:

04-10-302-034-0000

Document Number to Correct:

1405756223

I, IRA HOLTZMAN, the affiant and preparer of this Scrivener's Affidavit, whose relationship to the above-referenced document number is (ex. drafting attorney, closing title company, grantor/grantee, etc.):

GRANTOR - OWNER, do hereby swear and affirm that Document Number:

1405756223, included the following mistake: THE PIN OF 04-10-302-034-0000 WAS OMITTED. THE LEGAL WAS CORRECTLY SHOWN FOR BOTH PARCELS AND THE PIN FOR ONE PARCEL WAS CORRECTLY SHOWN

which is hereby corrected as follows: (use additional pages as needed, **legal must be attached for property**, or attach an exhibit which includes the correction—but **DO NOT ATTACH** the original/certified copy of the originally recorded document): ADD PIN 04-10-302-034-0000 TO DOCUMENT 1405756223

Finally, I IRA HOLTZMAN, the affiant, do hereby swear to the above correction, and believe it to be the true and accurate intention(s) of the parties who drafted and recorded the referenced document.

Affiant's Signature Above

8/20/2020
Date Affidavit Executed

NOTARY SECTION:

State of ILLINOIS)
County of Cook)

I, MARC L. MUSKAT, a Notary Public for the above-referenced jurisdiction do hereby swear and affirm that the above-referenced affiant did appear before me on the below indicated date and affix her/his signature or marking to the foregoing Scrivener's Affidavit after providing me with a government issued identification, and appearing to be of sound mind and free from any undue coercion or influence.

AFFIX NOTARY STAMP BELOW

Notary Public Signature Below, Date Notarized Below

Marc Muskat 8/20/2020

MARC L MUSKAT
Official Seal
Notary Public – State of Illinois
My Commission Expires Apr 3, 2021

S Y
P
S I
M
SC
E
INT

TRUSTEE'S DEED

This indenture made this 3RD day of FEBRUARY 2014, between CHICAGO TITLE LAND TRUST COMPANY, a corporation of Illinois, successor trustee to Cole Taylor Bank, as trustee under the provisions of a deed or deeds in trust, duly recorded and delivered to said company in pursuance of a trust agreement dated the 18th day of SEPTEMBER, 2000 and known as Trust Number 01-9056 party of the first part, and---- I & A HOLDINGS LLC-SERIES 1307 SHERMER (50%) AND WILLIAM K. SCHLOSS AND LESLIE A. SCHLOSS AS JOINT TENANTS WITH RIGHT OF SURVIVORSHIP (50%)
WHOSE ADDRESS IS:---- 1307 SHERMER ROAD, NORTHBROOK, IL. 60062 party of the second part.

Doc#: 1405756223 Fee: $42.00
RHSP Fee:$9.00 RPRF Fee: $1.00
Affidavit Fee: $2.00
Karen A.Yarbrough
Cook County Recorder of Deeds
Date: 02/26/2014 01:27 PM Pg: 1 of 3

Reserved for Recorder's Office

WITNESSETH, That said party of the first part, in consideration of the sum of TEN and no/100 DOLLARS ($10.00) AND OTHER GOOD AND VALUABLE considerations in hand paid, does hereby CONVEY AND QUITCLAIM unto said party of the second part, the following described real estate, situated in COOK,County, Illinois,to wit:----------

PARCEL 1: LOT 3 (EXCEPT THE SOUTHWESTERLY 40 FEET THEREOF AND EXCEPT THE NORTHEASTERLY 153 FEET THEREOF AS MEASURED ON THE SOUTHWESTERLY LINE) IN GEORGE A. KIEST'S SUBDIVISION OF BLOCKS 2 AND 4 IN THE SUBDIVISION OF PART OF WEST HALF OF SECTION 10, TOWNSHIP 42 NORTH, RANGE 12, EAST OF THE THIRD PRINCIPAL MERIDIAN, IN COOK COUNTY, ILLINOIS.
PARCEL 2: THE NORTHWESTERLY 50 FEET OF LOT 4 (EXCEPT THE SOUTHWESTERLY 40 FEET AND EXCEPT THE NORTHEASTERLY 153 FEET THEREOF AS MEASURED ON THE NORTHWESTERLY LINE OF SAID LOT 4) IN GEORGE A. KEIST'S SUBDIVISION OF BLOCK 2 AND 4 IN THE SUBDIVISION OF PART OF THE WEST ½ OF SECTION 10, TOWNSHIP 42 NORTH, RANGE 12 EAST OF THE THIRD PRINCIPAL MERIDIAN, IN COOK COUNTY, ILLINOIS.

PROPERTY ADDRESS: 1307 SHERMER ROAD, NORTHBROOK, IL. 60062

PERMANENT TAX NUMBER: 04-10-302-032-0000

together with the tenements and appurtenances thereunto belonging.
TO HAVE AND TO HOLD the same unto said party of the second part, and to the proper use, benefit and behoof forever of said party of the second part.
This deed is executed pursuant to and in the exercise of the power and authority granted to and vested in said trustee by the terms of said deed or deeds in trust delivered to said trustee in pursuance of the trust agreement above mentioned. This deed is made subject to the lien of every trust deed or mortgage (if any there be) of record in said county given to secure the payment of money, and remaining unreleased at the date of the delivery hereof.
IN WITNESS WHEREOF, said party of the first part has caused its corporate seal to be hereto affixed, and has caused its name to be signed to these presents by its Trust Officer the day and year first above written.

CHICAGO TITLE LAND TRUST COMPANY, CORPORATE SEAL, CHICAGO, ILLINOIS

CHICAGO TITLE LAND TRUST COMPANY,
as Trustee as Aforesaid

By: _____
Trust Officer

Exhibit - Corrected

TRUSTEE'S DEED

This indenture made this 3RD day of FEBRUARY 2014, between CHICAGO TITLE LAND TRUST COMPANY, a corporation of Illinois, successor trustee to Cole Taylor Bank, as trustee under the provisions of a deed or deeds in trust, duly recorded and delivered to said company in pursuance of a trust agreement dated the 18th day of SEPTEMBER, 2000 and known as Trust Number 01-9056 party of the first part, and---- I & A HOLDINGS LLC-SERIES 1307 SHERMER (50%) AND WILLIAM K. SCHLOSS AND LESLIE A. SCHLOSS AS JOINT TENANTS WITH RIGHT OF SURVIVORSHIP (50%)
WHOSE ADDRESS IS:----- 1307 SHERMER ROAD, NORTHBROOK, IL. 60062 party of the second part.

Doc#: 1405756223 Fee: $42.00
RHSP Fee:$9.00 RPRF Fee: $1.00
Affidavit Fee: $2.00
Karen A.Yarbrough
Cook County Recorder of Deeds
Date: 02/26/2014 01:27 PM Pg: 1 of 3

Reserved for Recorder's Office

WITNESSETH, That said party of the first part, in consideration of the sum of TEN and no/100 DOLLARS ($10.00) AND OTHER GOOD AND VALUABLE considerations in hand paid, does hereby CONVEY AND QUITCLAIM unto said party of the second part, the following described real estate, situated in COOK,County, Illinois,to wit:----------

PARCEL 1: LOT 3 (EXCEPT THE SOUTHWESTERLY 40 FEET THEREOF AND EXCEPT THE NORTHEASTERLY 153 FEET THEREOF AS MEASURED ON THE SOUTHWESTERLY LINE) IN GEORGE A. KIEST'S SUBDIVISION OF BLOCKS 2 AND 4 IN THE SUBDIVISION OF PART OF WEST HALF OF SECTION 10, TOWNSHIP 42 NORTH, RANGE 12, EAST OF THE THIRD PRINCIPAL MERIDIAN, IN COOK COUNTY, ILLINOIS.
PARCEL 2: THE NORTHWESTERLY 50 FEET OF LOT 4 (EXCEPT THE SOUTHWESTERLY 40 FEET AND EXCEPT THE NORTHEASTERLY 153 FEET THEREOF AS MEASURED ON THE NORTHWESTERLY LINE OF SAID LOT 4) IN GEORGE A. KEIST'S SUBDIVISION OF BLOCK 2 AND 4 IN THE SUBDIVISION OF PART OF THE WEST ½ OF SECTION 10, TOWNSHIP 42 NORTH, RANGE 12 EAST OF THE THIRD PRINCIPAL MERIDIAN, IN COOK COUNTY, ILLINOIS.

PROPERTY ADDRESS: 1307 SHERMER ROAD, NORTHBROOK, IL. 60062

PERMANENT TAX NUMBER: 04-10-302-032-0000 Correction 04-10-302-034-0000

together with the tenements and appurtenances thereunto belonging.
TO HAVE AND TO HOLD the same unto said party of the second part, and to the proper use, benefit and behoof forever of said party of the second part.
This deed is executed pursuant to and in the exercise of the power and authority granted to and vested in said trustee by the terms of said deed or deeds in trust delivered to said trustee in pursuance of the trust agreement above mentioned. This deed is made subject to the lien of every trust deed or mortgage (if any there be) of record in said county given to secure the payment of money, and remaining unreleased at the date of the delivery hereof.
IN WITNESS WHEREOF, said party of the first part has caused its corporate seal to be hereto affixed, and has caused its name to be signed to these presents by its Trust Officer the day and year first above written.

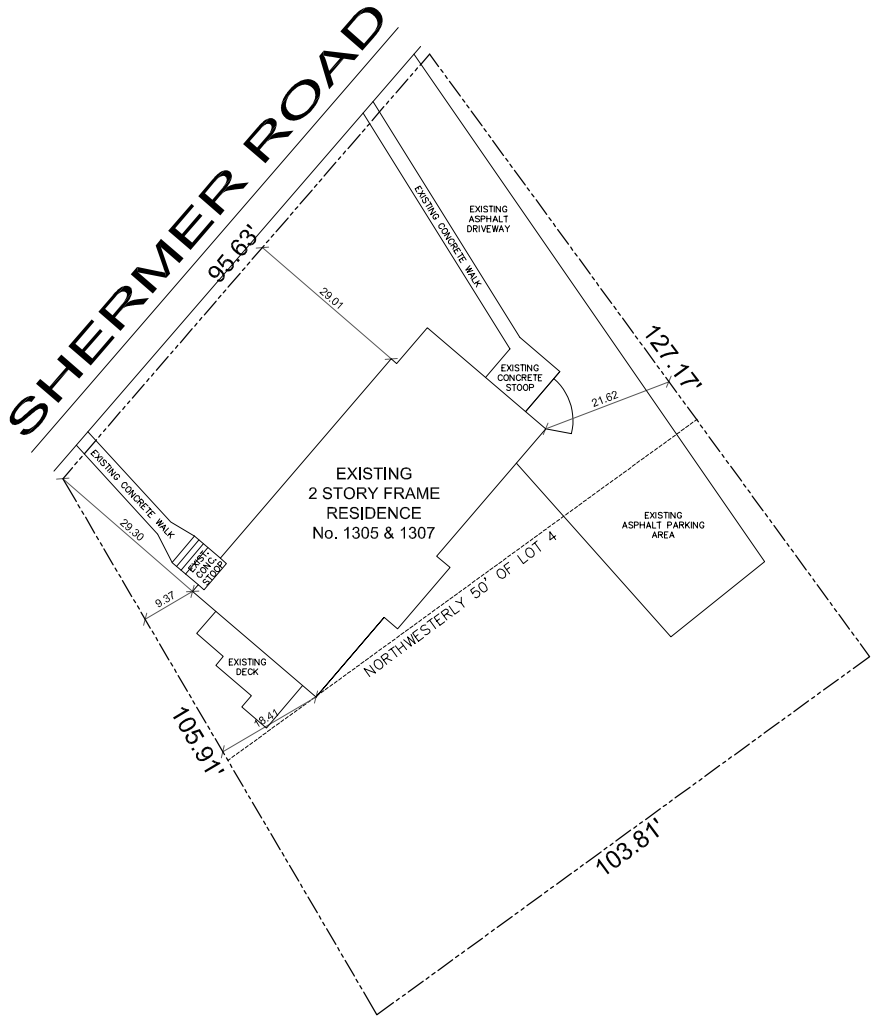

01 EXISTING SITE PLAN

SCALE: 1" = 10'-0"

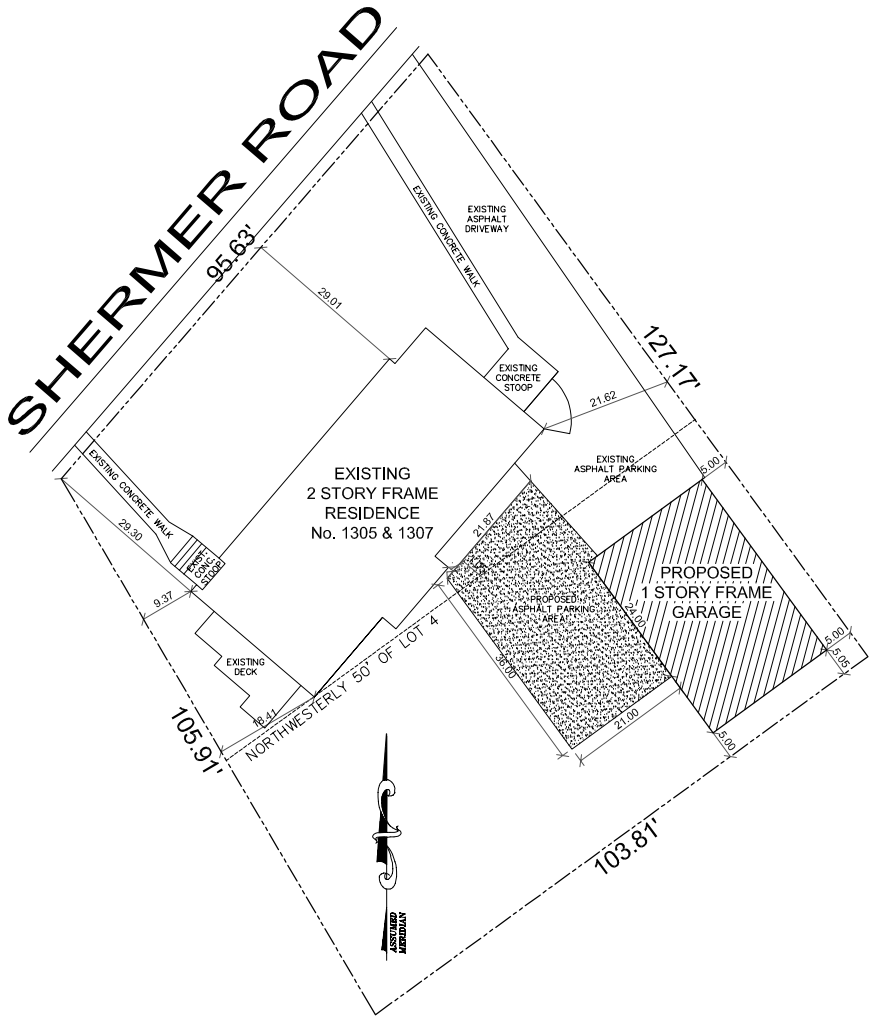

02 PROPOSED SITE PLAN

SCALE: 1" = 10'-0"

LOT AREA = 11,394 S.F.

GROSS FLOOR AREA (FAR):	EXISTING	PROPOSED	TOTAL (SF)
FIRST FLOOR	1693.78	0	1693.78
SECOND FLOOR	945.00	0	945.00
DETACHED GARAGE	0	864.00	864.00
	TOTAL FLOOR AREA		3,502.78 SF
		3502.78 / 11,394 (TOTAL BUILDING AREA / LOT AREA)	= 30.74% (FAR) (FLOOR AREA RATIO)

MAXIMUM BUILDING COVERAGE	EXISTING	PROPOSED	TOTAL (SF)
FIRST FLOOR	1693.78	0	1693.78
DETACHED GARAGE	0	864.00	864.00
	TOTAL BUILDING AREA		2,557.78 SF
		2557.78 / 11,394 (TOTAL BUILDING AREA / LOT AREA)	= 22.44% (BLDG. COVERAGE RATIO)

MAX. LOT COVERAGE (IMPERV. SURFACE)	EXISTING	PROPOSED	TOTAL (SF)
BUILDING FOOTPRINT	1693.78	0	1693.78
DETACHED GARAGE	0	864.00	864.00
DRIVEWAY	1622.88	442.22	2065.10
WALKS / STOOPS	314.18	0	314.18
DECK / PATIO	138.25	0	138.25
TOTAL IMPERVIOUS SURFACE AREA	3,769.09	1,306.22	5,075.31
		5075.31 / 11,394 (TOTAL IMPERVIOUS SURFACE AREA / LOT AREA)	= 44.54% (IMPERVIOUS SURFACE RATIO)

ASSUMED ELEVATION

HOTLZMAN RESIDENCE
DETACHED GARAGE ADDITION
1305-1307 SHERMER ROAD
NORTHBROOK, ILLINOIS 60062

DATE: 04-10-25

SHEET NO. A-1 OF 2 SHEETS

TOWN STUDIOS, INC.
1297 SHERMER ROAD
NORTHBROOK, ILLINOIS 60062
PHONE: 847-498-0900
WWW.TOWNSTUDIOS.COM

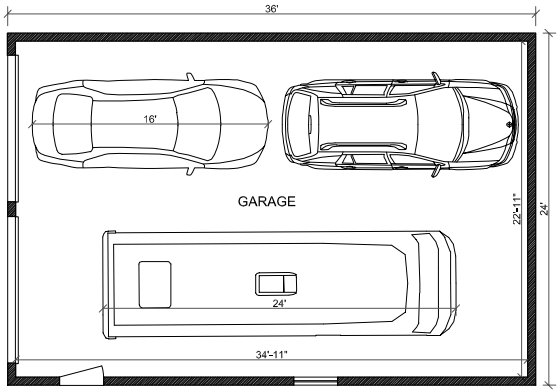

01 PROPOSED GARAGE PLAN
SCALE: 1/4" = 1'-0"

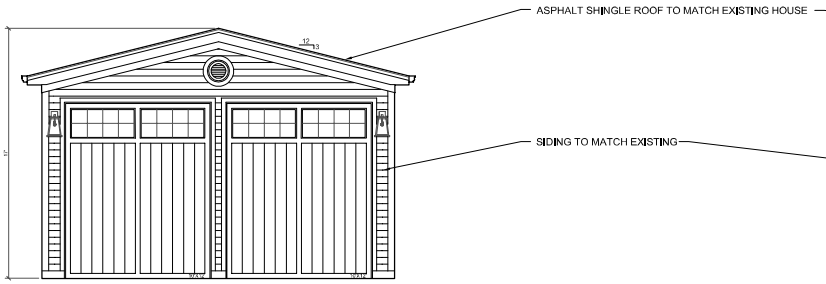

02 PROPOSED NORTHWEST ELEVATION (FACING SHERMER)
SCALE: 1/4" = 1'-0"

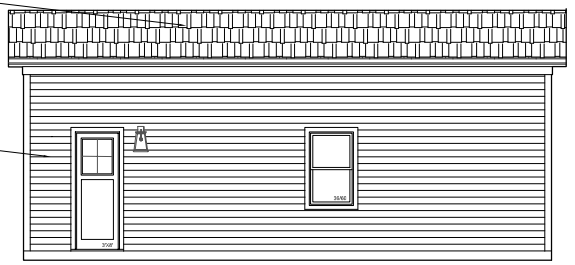

03 PROPOSED SOUTHWEST ELEVATION (RIGHT SIDE)
SCALE: 1/4" = 1'-0"

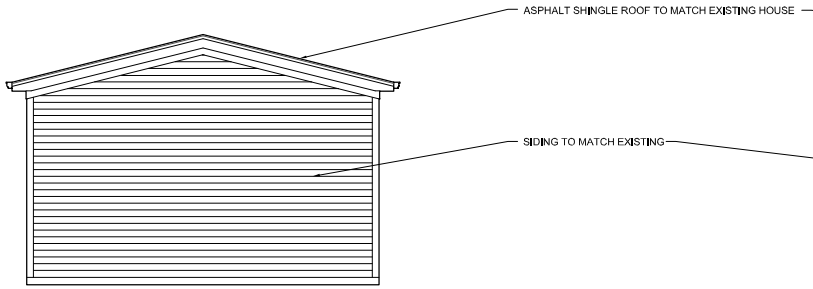

04 PROPOSED SOUTHEAST ELEVATION (REAR)
SCALE: 1/4" = 1'-0"

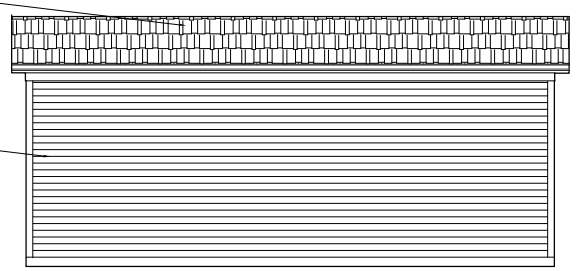

05 PROPOSED NORTHAST ELEVATION (LEFT SIDE)
SCALE: 1/4" = 1'-0"

SHEET NO. A-2 OF 2 SHEETS

DATE: 6-10-25

HOTLZMAN RESIDENCE
DETACHED GARAGE ADDITION
1305-1307 SHERMER ROAD
NORTHBROOK, ILLINOIS 60062

TOWN STUDIOS, INC.
1297 SHERMER ROAD
NORTHBROOK, ILLINOIS 60062
PHONE: 847-498-0900
WWW.TOWNSTUDIOS.COM

MEMORANDUM

To: Village Manager Cara Pavlicek
From: Director of Development and Planning Services Amy McEwan
Date: 2025-08-12
Subject: Preliminary Review of a Request by Little Einstein's Academy & Daycare Inc. for a Special Permit for Child Daycare Facility at 755 Huehl Road

Overview

The applicant intends to operate a child daycare facility in a vacant tenant space occupied previously by the same use but different business operator with an existing accessory outdoor play area.

Fiscal Impact

N/A.

Recommendation

The Village Board is asked to comment on the proposal and approve a motion that the public hearing be conducted by the Plan Commission.

Background

The applicant Little Einstein's Academy & Daycare Inc. has requested the following zoning relief to allow a child day care facility at the property commonly known as 755 Huehl Road:

A. Special Permit for Child Day Care Services (SIC No. 8351.00) in the IB Institutional Building District.

In reviewing this request, we suggest the Board consider the following policy questions:

a. Is the proposed child daycare use appropriate on the Subject Property?
b. Is it acceptable to grant a special permit for a child day care on the Subject Property in the IB Institutional District?
    i. If so, should there be any operational limitations?
c. Does the Board concur with the staff recommendation that the public hearing for the requested relief be conducted by the Plan Commission?

The property at 755 Huehl is described as being:

- located northeast corner of Dundee Road and Huehl Road;
- approximately 169,312 square feet in size;
- improved with an office building (41,000 square feet) with the proposed tenant space of 6,200 square feet;
- zoned IB Institutional Building District;
- designated as appropriate for Institutional Facility in the Comprehensive Plan's Future Land Use;
- surrounded by properties with land uses as depicted on the attached Application Summary;
- not located within the 100-year flood plain; and
- not located in proximity to any areas identified in the Master Stormwater Management Plan.
- The Village's Bicycle and Pedestrian Plan designates Huehl Road and Dundee Road in front of the property for a Sidepath (shared-use path located adjacent to roadway).

On January 24, 2012, the Board of Trustees granted Ordinance No. 2012-9 to allow a child day care facility at 755 Huehl Road for Wyspa Dzieci Learning Center. On February 14, 2017, Wyspa Dzieci was granted renewal for their special permit through Ordinance No. 2017-04. Subsequently, Wyspa Dzieci ceased operations and left the facility. The tenant unit has been vacant since January 2025.

The proposed plan notes:

- Little Einstein's Academy & Daycare Inc., the applicant, has proposed to occupy the same tenant unit previously occupied by a child day care facility (Wyspa Dzieci Learning Center) and is currently vacant. The applicant will be a tenant on the property and the property owner has entered into a lease with the applicant, which is attached. A child daycare facility is a special permit use in the IB Institutional Building District and the new child day care business is required to receive approval. Details regarding the proposed request are outlined in the attached material submitted by the Applicant.
- The proposed daycare will occupy 6,200 square feet in the southwest portion of the existing office building. The building will have five classrooms, an office, and a warming kitchen. Food will be catered and delivered daily in the morning. The food will be delivered via a van within the parking lot, which will be received by staff with the help of a delivery cart.
- The facility shall serve children between the age range of two years to twelve years old; divided into five classrooms with a total of 96 children within the facility. The class sizes would comply with the student/staff ratio as required by the DCFS guidelines.
- The Applicant has stated that the parents and guardians will park in the parking lot and accompany the children in and out of the facility as they will be required to sign-in and sign-out in order to drop-off and pick-up children.
- The proposed hours of operation are 7:00am – 6:00pm Monday through Friday; closed on weekends.
- The facility will be staffed by a total of 14 employees.
- There will be minor interior modifications made to accommodate the proposed day care, including adding a classroom. There will be no site or exterior building changes.
- There are 111 parking spaces provided on the property. The parking requirement for a

day care facility is 1 per employee plus 1 per 10 students. Based on the data provided by the Applicant, a total of 24 spaces would be required for the proposed use. Based on our records, the previous day care tenant required 23 parking spaces. Given that there has not been major changes in the tenant mix on the property, it appears that parking will be in compliance with the requirements of the Zoning Code. Parking will be reviewed in more detail during formal review.

- No signage information for the proposed use has been submitted at this time and will be reviewed at the time of formal application or sign permit application.
- There is an existing outdoor playground area enclosed with a privacy fence, adjacent to the southwest portion of the building. The play area will be directly accessed through the childcare facility.

The Applicant and staff will attend the August 12, 2025 Board of Trustees meeting to answer any questions.

Supplemental - Applicant Submittal - 755 Huehl
Supplemental - Application Summary, Aerial, Site Photos - 755 Huehl
Supplemental - Presentation - 755 Huehl

PRELIMINARY REVIEW APPLICATION – ZONING & SUBDIVISION RELIEF**

Prior to applying for preliminary review of requested zoning and/or subdivision relief by the Village Board, the Applicant should schedule a meeting with the Department of Development & Planning Services to discuss the requested relief. ***(**Note: Applications for zoning relief from the Zoning Board of Appeals must use a different application form.)***

The purpose of a preliminary review is to broadly acquaint the Village Board with the applicant's proposal and to provide the applicant with any preliminary views or concerns that members of the Board may have at a time in the process when positions are still flexible and adjustment is still possible. At the meeting at which the preliminary application is considered, any member of the Board of Trustees may make any comments, suggestions or recommendations regarding the preliminary application deemed necessary or appropriate by that member; provided, however, that no final or binding action shall be taken with respect to any preliminary application. Nothing said or done in the course of such review shall be deemed to create, or to prejudice, any rights of the applicant or to obligate the Village Board, or any member of it, to approve or deny any formal application following full consideration thereof as required by this Code.

The following materials are the minimum required for the processing of a preliminary review by the Village of Northbrook's Board of Trustees. There is no filing fee for the preliminary review; however, review of a submitted formal application will require payment of a filing fee(s). If you have questions regarding the completion of this process contact the Development & Planning Services Department at (847) 664-4050.

Current Property Owner Information

Legal Name: **Center On Deafness**

Primary Contact: **John Little**

Address **3444 Dundee Rd**

City, State, Zip **Northbrook IL 60062**

Phone No. **847 504-8251**

Email **jlittle@centerondeafness.org**

Applicant Information

Legal Name **Little Einsteins Academy & Daycare INC**

Primary Contact: **Natalia Zukowski**

Company **Little Einsteins Academy & Daycare INC**

Address **755 Huehl Rd**

City, State, Zip **Northbrook IL 60062**

Phone No. **773 724 0703**

Email **littleeinsteinsacademydaycare@gmail.com**

Property Information

(if more than one parcel is involved in the request please include the information for all parcels)

Site Location/Address: **755 Huehl Rd Northbrook IL 60062**

Size of Property: **6,200 sq ft** (square feet/acres)

Size of Building Space, if applicable: _____ (square feet)

Current Zoning[1]: **IB**

Current Use of the Property: **previously daycare, currently vacant as of 01/2025**

[1] www.northbrook.il.us/zoningmap

OVER →

LITTLE EINSTEINS ACADEMY
& DAYCARE CENTER

Date: 07/10/2025

Village of Northbrook Preliminary Review Application Written Narrative

Description of Property, as it exists today & Use of Property

The property at 755 Huehl Rd is currently vacant. The previous tenant was licensed by DCFS and the village of Northbrook for a daycare. The property is 6,200sq. Currently there are 4 classrooms, a large open space, which was used as a gross motor area by the previous daycare. There is also an office and two closed storage spaces as well as three closed closets and a mop sink closet. There are two restrooms with 5 toilets total. There is a warming kitchen with a three compartment sink and a refrigerator in the building. Outside, there is a fenced playground.

755 Huehl is connected to a larger building owned by The Center for Deafness, located at 3444 Dundee Rd Northbrook IL 60062. 755 is leased from The Center for Deafness. There is are two entrances to the rest of the building from 755 Huehl, which are locked at all times. Only admins have the keys to access these doors. The secondary emergency exit from 755 Huehl is not affected by these locked doors.

The Center for Deafness occupies the building along with two tenants; Little Einsteins Academy, a proposed daycare, occupying 6,200sq ft and Comfort Air Control, an HVAC Company, occupying 600 sf ft of space. The Center for Deafness is a nonprofit organization which provides a day service program for the deaf and hearing individuals who are MI and DD. The deaf program provides services for 27 individuals and the hearing program provide services for 10-12. Staff in the building consists of a total of 18 part and full time employees. The Center on Deafness takes up a total of 20,000 square feet. The square footage of the building is 41,000 square feet.

755 Huehl Rd and 3444 Dundee Rd share a parking lot, located on the side of the building. There are 111 car stalls, 5 ADA Stalls and 267 LF of curb. There is 66SF of bay door area, which is not used by 755 Huehl.

773-724-0703
littleeinsteinsacademydaycare@gmail.com
755 Huehl Rd, Northbrook IL 60062

Description of the proposed use of property

The proposed use of the property at 755 Huehl is a daycare center. We are looking to add a fifth classroom, converting the previously open space into a closed classroom, with walls no higher than 8ft, add a hallway to connect the entrance with the rest of the classrooms, add a hand-washing sink in classroom 109 (see attached architectural plan for floor plan with classroom numbers), and a stackable laundry machine by the mop sink in the mop closet. Additionally the entrance to the playground will be through the front corridor, with the outside gate only used as a secondary, emergency exit from the playground. (See architectural plan for proposed new exterior door with side lights.

The existing parking lot is to remain, with no changes. The fire lane, located near the front entrance of 755 Huehl, has signage to inform daycare parents there is no stoping or standing in the fire lane and they cannot use this lane for pick up and drop off. All deliveries to the daycare must park on the parking lot, not in the fire lane.

755 Huehl is leased from The Center on Deafness by Little Einsteins Academy & Daycare. Per the lease agreement The Center on Deafness has agreed to allow Little Einsteins Academy & Daycare to make interior and exterior changes to the building, per city and state permit approvals, and to run a state licensed daycare, as needed. (See attached lease agreement) All proposed changes to the building are in the first paragraph under “Description of the proposed use of property”. There are no proposed exterior alterations proposed.

Little Einsteins Academy & Daycare will be licensed by DCFS. The license will be for no more than 96 children, with 14 staff members. Little Einsteins Academy & Daycare will be opening 5 classrooms for children ages 2 years old to 12 years old. Below is the list of classrooms and the ages of children they serve, along with the number of staff members.

Classroom 1 (103) - 2-3 year olds - Max kids: 16 - Staff: 2
Classroom 2 (104) - 3-4 year olds - Max kids: 20 - Staff: 2
Classroom 3 (105) - 4-5 year olds - Max kids: 20 - Staff: 2
Classroom 4 (109) - 15 months- 2 year olds - Max kids: 15 - Staff: 3

Classroom 5 (113) - 5-12 year olds - Max kids: 25 - Staff: 2

Little Einsteins Academy & Daycare will operate from Monday - Friday from 7:00am-6:00pm. Little Einsteins Academy & Daycare will be closed on Saturdays and Sundays.

Little Einsteins Academy & Daycare will be operated in accordance to state DCFS and Fire Marshall and city guidelines.

Per DCFS guidelines, Little Einsteins Academy & Daycare will operate in the following manner.

Design & Maintenance of Building:

The building is a single story building, with one main entrance in the front and an evacuation exit from the rear of the building. From the front corridor, there is access to the daycare and to the playground. The front doors are to remain closed and locked at all times. Parents or visitors will need to be let in by a staff member.

The building will have five classrooms and an office as well as a warming kitchen. There are multiple closets in the building which will be used as storage spaces. Any closets that will hold any chemicals such as cleaning equipment will be hung on automatic self closing door hinges and locked.

There are two bathrooms at the end of the corridor, these will be used by all classrooms. There is a diaper changing table for kids who are not yet potty trained or in the process. There will be toilet training equipment provided for children being toilet trained.

The building has a parking lot with 111 car stalls. The parking lot was recently sealed and striped in July 2025.

Entrances and Exits:

The facility has:

1. Front entrance door leading to lobby
2. One interior door leading from the to the director’s office.
3. Five classroom doors (each classroom is going to have a door.
4. One door to the kitchen

5. One back door to be used as an evacuation exit.

The width of the doors will accommodate wheelchairs and the needs of individuals with physical disabilities.
Interior doors will swing in the directon of most frequent travel and exit doors will swing to the exterior.
Doorways and exits will be free of debris and equipment to allow unobstructed traffic from the room.
The hand contact and splash areas of doors and walls will be covered with an easily cleanable finish, at least as cleanable as an epoxy finish or enamel paint.

Maintenance and Storage of Food Service and Maintenance Equipment, Chemicals, and Supplies:

Little Einsteins Academy & Daycare will serve breakfast, lunch, and two snacks. Food will be catered from Child Eats, which is a licensed and insured daycare catering company. Food will be delivered daily, in the morning, between the hours of 7:00am and 8:00am.

Food will be delivered via a sprinter van from the caterer, driven by the catering company's driver. The van will park in the parking lot, the delivery driver shall call the director or assistant director, then the director or director assistant shall take a food cart and bring it to the food delivery driver. The delivery driver shall put all food trays on the cart and the director or assistant director shall take the cart inside to the kitchen and measure the temperature of the food.

The temperature of food delivered will be measured at the time of delivery with a food grade thermometer and recorded in the food temperature log. The food will be then placed either in the refrigerator for cold food or on the hot plate for hot foods.

Drop off and pick up Policy:

All parents, caregivers, or other persons who are picking up or dropping off children must park in the parking lot and walk their children to and from the building using the front door using the sidewalk. Parents will be informed and reminded as needed that they cannot park in the fire lane and Little Einsteins Academy will not accept children from outside, the

parent or guardian must walk with their child/children to the building from the parking lot, sign the child in on the sign in sheets, only then can a staff member take the child to their classroom.

The daycare's front door will be locked at all times. Parents will be able to access the building by using a call button on the side of the door. After confirming the person's identity the director will buzz them in or physically open the door for them.

Only those people who the parent/guardian has authorized through written consent will be allowed to pick up the child/children. The mother/father is always allowed to pick up their child/children from the center regardless of being on the pick up list. A court order is the only document that prevents a parent from picking up their child.

The following information must be included for anyone listed on the pick up list: First and Last Name, Relationship to the child, Working telephone number for work, home, and cell phone, and home address.

Anyone picking up a child must be over the age of 18 and present a valid photo ID.

Child/Children being taken out of the center must have written authorization on file by parent or legal guardian.

Children are not allowed to enter or exit the building by themselves. A parent or guardian must be with their child at all times. Once the parent/guardian or pick up person arrives and greets the child/children, the child/children are now the responsibility of the parent/guardian or pick up person.

Sign In & Sign Out Policy:

All children must be signed in and out everyday on our log sheets. This lets us know who is dropping off and picking up each child along with the time of their arrival and departure.

DCFS License & Renewal:

DCFS will license Little Einsteins Academy. The initial DCFS licensing process will check to make sure Little Einsteins Academy follows all state standards including child to staff ratio, proper record maintenance, and

proper documentation of forms, files and classroom management. The initial licensing process entails that once all documentation is accepted and approved by DCFS a initial license is given to the daycare, for the first six months the daycare is in the permit phase where DCFS conducts unannounced surprise visits to ensure the center is complying with all standards. After the permit phase the daycare center receives their license, which needs to be renewed every three years. DCFS then conducts an annual visit, as well as unannounced visits throughout the year as they see fit.

Little Einsteins Academy, per DCFS requirements, is required to undergo the license renewal process every three years. The license renewal process, similar to the initial process again checks compliance with all standards and rules.

GISConsortium



Legend

- entrance
- 755 Huehl
  Little Einsteins Academy
  Building Surface
- Fenced Outdoor
  Playground

0 150 300 ft

Print Date: 7/9/2025

Notes

Disclaimer: The GIS Consortium and MDP Inc. are not liable for any use, misuse, modification or disclosure of any map provided under applicable law. This map is for general information purposes only. Although the information is believed to be generally accurate, errors may exist and the user should independently confirm for accuracy. The map does not constitute a regulatory determination and is not a base for engineering design. A Registered Land Surveyor should be consulted to determine precise location boundaries on the ground.


Center For Deafness
3444 Dundee Rd
Northbrook, IL 60062
Striping Plan:
Car Stalls - 111 EA
ADA Stalls - 5 EA
Curb - 267 LF
Bay Door Area - 66 SF
ADA Sign/Fine Tag and Post in Greenspace
5 EA

Existing Construction to Remain

New Wall Construction (see wall sections)

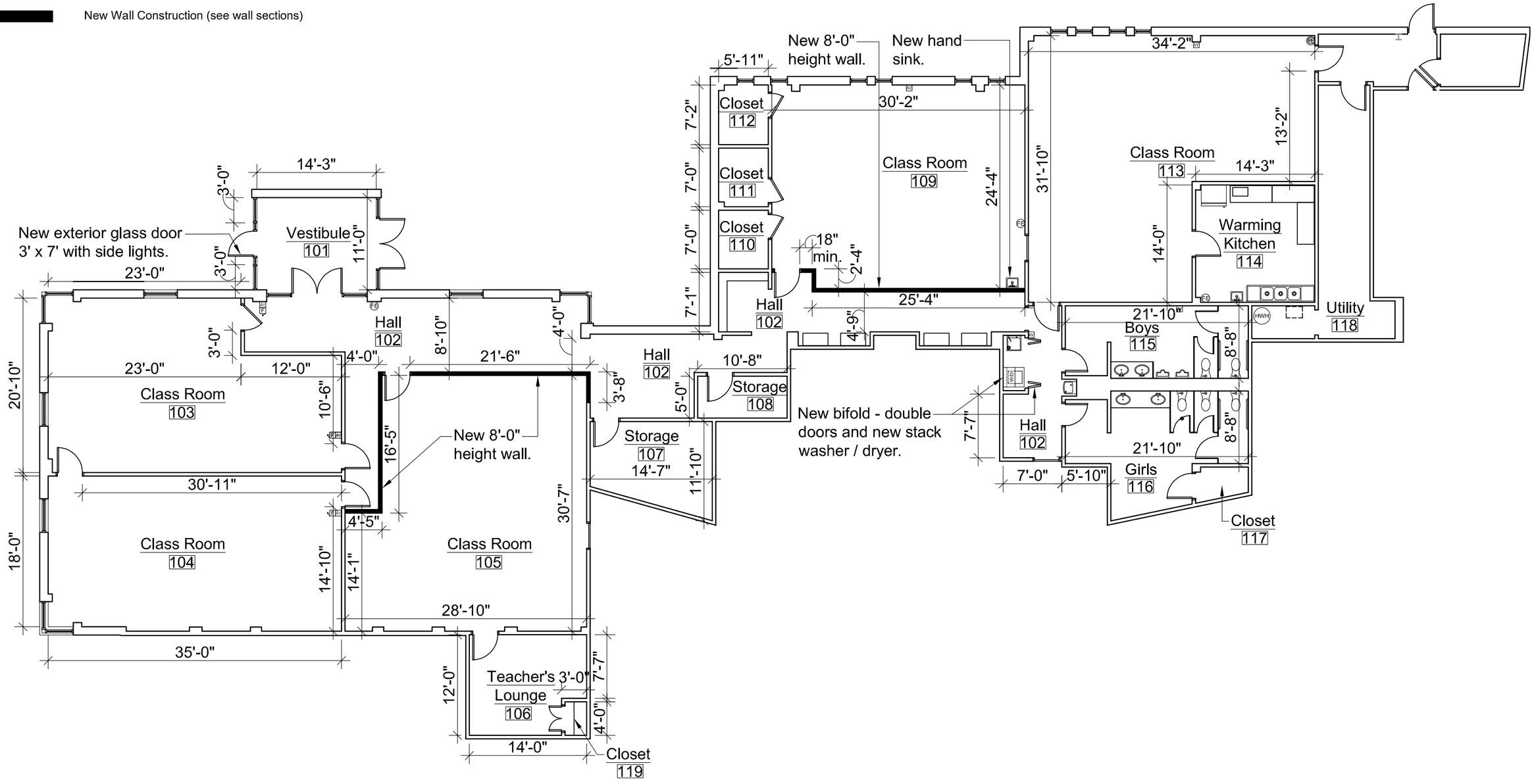

Scheme - A
Not to Scale

North

05/19/2025

This drawing indicates the general scope of the building in terms of its layout. Contractors shall field verify any critical dimensions prior to construction. This drawing has been prepared by Gensburg, Ltd. Architecture/Design, 105 Revere Dr., Suite G. Northbrook, Illinois 60062 Tel. (847) 715-9591.

PROPOSED REMODEL AT DAYCARE CENTER
755 HUEHL RD.
NORTHBROOK, ILLINOIS 60062

Fully executed Lease.

LEASE

This Lease is made and entered into as of **JUNE 1, 2025**, by and between Center on Deafness (Landlord) and LITTLE EINSTEINS ACADEMY & DAYCARE INC (Tenant).

1. **PREMISES.**
   In consideration of the mutual promises, covenants, and conditions herein set forth, Center on Deafness hereby leases to Little Einstens Acadamy & Daycare INC hereby leases from Center of Deafness the premises of 755 Huelh Rd, Northbrook, IL which are deemed to contain 6,450 square feet of Floor Area and outside non-exclusive use of grounds of approximately 1,200 square feet for a play area located in and around the building commonly known as 755 Huehl Rd, Northbrook, IL 60062, and which Premises are shown by Exhibit A hereto. The precise location of the play area is located South on Dundee Rd and will be used at the Tenant's responsibility and risk by ***LITTLE EINSTEINS ACADEMY & DAYCARE INC.***

2. **TERM.**
   2.1 **Term.** The Initial Term of this Lease shall be for the period of **72 months JUNE 1, 2025 and terminating JUNE 1, 2031** "Lease Term" or "Term" shall mean the Initial Term.

   2.2 Landlord agrees to deliver the Tenant agrees to accept possession of the Premises from Landlord upon execution of this Lease. From the possession date until **JUNE 1, 2031.** Tenant shall make all diligent effort to obtain all necessary permits and licenses to open a day care center. In the event the Tenant is unable to obtain all necessary permits and licenses on or before **December 31, 2025**, this Lease shall terminate. In such event, 50% of the security deposit shall be forfeited and retained by the Landlord in consideration of allowing the Tenant's possession during said period, and the remainder of the security deposit shall be returned to the Tenant.

3. **RENT.**

   3.1 **Rental Payment.** The tenanate will have the first three months of zero payments to remondale the space set by tenanates perferance and approve by Landloard as agreed. Tenanate shall pay to Landlord the sum of **$3,000 per month** commencing on **October 1, 2025 and ending May 1st of 2026**. Rental payments commencing on year one **(June 1st of 2026)** tenanate shall pay the Landlord the sum of **$7,000 per month**. Rental payment shall be due on the 1st of each month thereafter. In the event that rental payments are not paid to the Landlord within 5 days of said due date, the Tenant shall pay a late fee in the amount of $200 for each month in which rental payment is more than 5 days late. The rental payment shall increase each year at a rate of 3% per annum on the anniversary date of the lease and terminate on the last day of the last month of

if any. Checks should be made to Center on Deafness. A $50.00 fee will apply for any returned checks.

3.2 **Security Deposit**. Concurrent with Tenant's execution of the Lease, Tenant shall furnish Landlord with a security deposit in the amount of **$4,000**. Subject to Paragraph thereof, provided the Tenant is not in default under this Lease, the Security Deposit or any balance thereof shall be returned to the Tenant at the expiration or sooner termination of the Lease Term and after delivery of exclusive possession of the Premises to the Landlord in the condition required by this Lease.

3.3 **Non-profit Status of Tenant.** The Tenant represents that it is a non-profit organization that is tax-exempt pursuant to 501(c)(3) of the Internal Revenue Code and is eligible to obtain real estate tax exemption. If any real estate taxes are assessed against the Landlord due to the Tenant's current failure to maintain said non-profit and tax-exempt status, the Tenant shall promptly pay the Landlord any real estate tax due as a result of said failure.

4. **IMPROVEMENTS, MAINTAINANCE AND REPAIRS.**

4.1 **Tenant's Obligations.** Tenant shall perform all work necessary to obtain licensing and permitting of the Premises for a day care center. All tenant improvements and/or changes to the property shall be subject to the landlord's review and approval and done at the tenant's sole expense. Upon completion of Tenant's Improvements, Tenant shall maintain the interior and exterior of the Premises except as outlined in 4.2 below, including but not limited to replacing light bulbs and any other interior fixtures.

4.2 **Landlord's Obligations.** Subject to the foregoing, Landlord shall keep and maintain good condition and repair (or replace, if necessary) the roof, exterior walls, structural parts, and structural floor of the Premises, fire protection services, and pipes and conduits outside the Premises for the furnishing to the Premises of various utilities (expect to the extent that the same are the obligation of the appropriate public utility company). However, it is provided that any of the foregoing repairs or maintenance shall be the Tenant's responsibility.

5. **INSURANCE; INDEMNITY; SUBROGATION.**

5.1 **General.** Tenant shall deliver to Landlord copies of its insurance policies or a certificate evidencing that coverage is in effect on ***June 1, 2025***. Coverage shall not be canceled or materially reduced during the Term of the Lease.

5.2 **Tenant's Liability Insurance.** Tenant shall keep in force during the term of this Lease a policy of commercial general liability insurance insuring against any liability arising out of Tenant's use, occupancy, or maintenance of the Premises and the acts, omissions, and negligence of Tenant, its agents, employees, contractors, and invitees in the about the Premises

and the Premises. As of the Term Commencement Date, such insurance shall provide coverage for not less than $2,000,000 per occurrence for bodily injury and property damage.

5.3 **Landlord's Insurance**. Landlord shall keep and maintain, in full force and effect, a policy of fire insurance, including special form coverage, in an amount not less than 100 percent of the full replacement value of the Premises and the Premises as such value may exist from time to time, including foundations, footings, and excavations. The term "Landlord Insurance" shall mean any insurance maintained by Landlord, including fire insurance and extended coverage or all-risk, public liability, and any other policy that may be carried by Landlord (including Rental Value Insurance earthquake and flood insurance, if purchased by Landlord) insuring the Premises or portions thereof. The Landlord shall not be obligated to provide any insurance for the personal property of the Tenant.

5.4 **Waiver of Subrogation**. Neither Landlord nor Tenant Shall be liable to the other or any insurance company (by way of subrogation or otherwise) insuring the other party for any loss or damage to any building, structure, or other tangible property, or any resulting loss of income and benefits (even though such loss or damage might have been occasioned by the negligence of such party, its agents, or employees) if such loss or damage is covered by insurance benefiting the party suffering such loss or damage.

6. **USE.** The Premises shall be used for the operation of the daycare center and its supporting uses. The tenant's regular hours of operation shall be Monday through Friday, 7 a.m. to 6 p.m., with occasional special events. If there are any special events outside of regular operating hours, the Tenant must give prior written notice to the Landlord. Staff members may stay in the building after 6 pm for decorating, class preparation work, meetings with parents, parenting classes, or teaching training. The tenant shall serve no more than (DCFS children approval license capacity), with staff not to exceed (number of staff). However, only four staff members shall be issued a number set of keys after providing the Landlord with a valid ID to be kept on file with the owners. Any changes of employee key holder must be notified to ownership and presented to the owner attributable to Tenants; the replacement cost shall be the Tenant's sole expense.

7. **SURRENDER**. Upon the expiration or termination of this Lease, Tenant shall surrender the Premises to Landlord in good and broom-clean conditions, with all of Tenant's trade fixtures, signs, and personalty removed, expecting ordinary wear and tear and damage that is caused by fire or other casualty that Landlord is obligated to repair. Tenant shall also remove any Tenant-installed improvements that Landlord may require to be removed.

8. **UTILITIES.** The Landlord shall pay for all water, gas, electricity, and other utilities used by the Tenant during the Lease Term. In case of any failure, stoppage, or interruption of utilities or services, the Landlord shall use its reasonable efforts to restore all services promptly.

9. ASSIGNMENT AND SUBLETING.

9.1 **Landlord's Right of Consent**. The Tenant shall not transfer, assign, or sublet all or any part of this Lease without obtaining the Landlord's written consent, which shall not be unreasonably withheld.

10. DEFAULTS, REMEDIES.

10.1 **Tenant's Default**. Tenant shall be in default if (a) Tenant fails to make any payment or Rent; (b) if Tenant fails to perform any other obligation to be performed by Tenant hereunder; (c) if Tenant abandons or vacates the Premises; or (d) if Tenant files a petition or institutes any proceedings under the Bankruptcy Code.

10.2 Should the Landlord elect to terminate this Lease pursuant to the provisions of Section 10.1 above, the Landlord's damages shall not be limited to the recovery of unpaid rent until the date that the Tenant surrenders possession to the Landlord. The Tenant agrees that its liability for unpaid rent shall accrue whether or not it continues in possession and, in addition, the Tenant agrees to pay all costs of collecting unpaid amounts due under the Lease, including but not limited to court costs and attorney's fees.

11. CONDEMNATION.

11.1 **Taking.** If any portion of the building that contains the Premises (Building) or the Common Area shall be taken under any right of eminent domain, or any transfer in lieu thereof and such taking renders the Premises unsuitable, in the reasonable judgment of Landlord, for Tenant's business operations, then Tenant or Landlord may terminate this Lease by giving written notice to the other within 10 days after such taking. If this Lease is not so terminated, Landlord shall repair and restore to expend more than the amount of the award received by Landlord for such purpose), and this Lease shall continue in full force and effect, but commencing with the date on which Tenant is deprived of the use of any portion of the Premises, is impaired, as reasonably determined by Tenant.

11.2 **Award.** Any and all awards payable by the condemning authority or other governmental agency in connection with a taking under the right of eminent domain shall be the apportioned by Landlord and Tenant according to the terms of the award.

12. **ADVERTISING, SIGNS, AND DISPLAYS.** The tenant shall be permitted to install an exterior business sign above the current building address with the Tenant's logo, name, and phone number. Any sign shall comply with all applicable laws, ordinances, and regulations the Village of Northbrook sets.

13. COMPLIANCE WITH LAWS.

13.1 **Laws Generally.** Tenant, at its sole cost and expense, shall comply with all existing and future laws, ordinances, orders, rules, regulations, and requirements of all governmental and quasi-governmental authorities (including the American with Disabilities Act, and any amendments thereto) having jurisdiction over the Premises. If any such work would involve changes to the building's structure, exterior, or mechanical, electrical, or plumbing systems, then such work shall be performed by the Tenant.

13.2 **Compliance with Environmental Laws.** Tenant shall not cause or permit any Hazardous Materials (as define below) to be brought, stored, used, handled, transported, generated, released, or disposed of, on, in, under, or about the Premises, the Common Areas, or any portion of the Premises by Tenant or any of the Tenant Parties; provided Tenant shall have the right to maintain upon the Premises such Hazardous Materials as are reasonably necessary for the conduct of Tenant business and proper maintenance of the Premises as long as such Hazardous Materials, are used and stored in compliance with all federal, state, and local laws, status, ordinances, orders, rules, regulations, and requirements (Requirements) of all governmental and quasi-governmental authorities (Authorities) with jurisdiction and all regulations relating to Hazardous Material. At all times and in all respects, Tenant and the other Tenant Parties shall comply with all Requirements. As used in this Lease, "Hazardous Materials" shall mean any hazardous, toxic, or radioactive substance, material, matter, or waste that is or becomes regulated by any Environmental Regulation, and shall include asbestos, petroleum products, radon gas, polychlorinated biphenyls (PCBs), and all substances classified under the terms "Hazardous Substance" and "Hazardous Waste" as defined in the Comprehensive Environmental Response, Compensation, and Liability Act of 1980 (CERCLA), as amended, 42 U.S.C. § 9601, et seq., the Resource Conservation and Recovery Act of 1976 (RCRA), as amended, 42 U.S.C. § 6901 et seq., and all environmental protection status of the state and municipality in which Premises are located.

14. HOLDING OVER. If Tenant remains in possession of the Premises after the expiration or sooner termination of the Lease Term, such possession by Tenant shall be deemed to be a month-to-month tenancy at twice the prevailing rental amount, terminable upon 30 days' prior written notice given at any time by either party. All provisions of this Lease shall apply to the month-to-month tenancy, except those specifying the Lease Term.

15. QUIET ENJOYMENT- As long as Tenant is not default hereunder, then, subject to the other terms and conditions of this Lease, Tenant shall not incur any manner of hindrance or interference with its quiet enjoyment, possession, and use from Landlord, subject to the conditions, and restrictions of record, including without limitation, any reciprocal easement agreements, declarations of covenants, conditions, and restrictions of record, as the same may be amended or modified from time to time, and (b) any mortgage, ground lease or other lien, or restriction of record to which this Lease is subordinate or may be subordinated (collectively "Superior Encumbrances").

16. **RIGHT OF ENTRY.** Landlord and its authorized representatives shall not have the right to enter the Premises except upon prior notice to Tenant or in emergencies.

17. **NOTICES.** Every Notice, demand, or request (collectively "Notice") required hereunder or by law to be given by either party to the other shall be in writing and shall be served on the parties at the addresses set forth below the signatures of the parties or such other address as the party to be served may from time to time designate in a Notice to the other party. Any such Notices shall be sent either by (a) United States certified or registered mail, postage prepaid, return receipt requested; (b) overnight delivery using nationally recognized overnight courier, which shall provide evidence of delivery upon sender's request; (c) personal delivery; or (d) facsimile transmission, in which case Notice shall be deemed delivered upon receipt of confirmation of such facsimile transmission of such Notice (provide a follow-up Notice is (i) mailed by certified or register United States Mail, postage, prepaid, return receipt requested; (ii) delivered by overnight courier delivery; or (iii) delivered by personal delivery within three business day thereafter). All notices given in the manner specified herein shall be effective upon the earliest to occur of actual receipt, the date of inability to deliver to the intended recipient as evidenced by the United States Postal Service or courier receipt, or the date of refusal by the intended recipient to accept delivery as evidenced by the United State Postal Service or courier.

18. **MISCELLANEOUS.**

18.1 **Cumulative Remedies.** No remedy herein conferred on or reserved to the Landlord is intended to be exclusive of any other remedy herein or by law provided, but each shall be cumulative and shall be in addition to every other remedy given hereunder or now hereafter existing at law or in equity by statute.

18.2 **Waiver of Trial by Jury.** Landlord and Tenant desire and intend that any disputes arising between them with respect to or in connection with this Lease be subject to expeditious resolution in a court trial without a jury. Therefore, Landlord and Tenant each hereby waive the right of trial by jury of any cause of action, claim, counterclaim, or cross-complaint in any action, proceeding, or other hearing brought by either Landlord against Tenant or Tenant against Landlord or any matter whatsoever arising out, of, or occupancy of the Premises, or any claim of injury or damage, or the enforcement of any remedy under any law, statute, or regulation, emergency or otherwise, now or hereafter in effect.

18.3 **Severability.** The unenforceability, invalidity, or illegality of any provision of this Lease shall not render the other provisions unenforceable, invalid, or illegal.

18.4 **Governing Laws.** The laws of the State of Illinois shall govern the validity, performance, and enforcement of this Lease. No conflict-of-law rules of any state or country (including, without limitation, Illinois conflict-of-law rules) shall be applied to result in the application of any substantive or procedural laws of any state or country other than Illinois. All controversies, claims, actions, or causes of action arising between the parties hereto and their

respective successors and assigns shall be brought, heard, and adjudicated by the courts of the State of Illinois, with venue in Cook County.

18.5 **Force Majeure.** If, by reason of any event of force majeure, either party to this Lease is prevented, delayed, or stopped from performing any act that such party is required to perform under this Lease other than the payment of Rent or other sums due hereunder, the deadline for equal to the period of prevention, delay, or stoppage resulting from the force majeure event, unless this Lease specifies that force of majeure is not applicable to the particular obligation. As used in this Lease, the term "force majeure" shall include, but not limited to, fire or other casualty; bad weather; inability to secure materials; strikes or labor disputes (over which the obligated party has no direct or indirect bearing in the resolution thereof, or if said party does have such bearing, said dispute occurs despite said party's good-faith efforts to resolve the same); acts of God; act of the public enemy or other hostile governmental action; civil commotion; terrorist acts; governmental restrictions; regulations, or controls; judicial orders; and/or other events over which the party obligated to perform (or its contractor or subcontractors) has no control.

18.6 **Successors and Assigns.** Subject to provisions of Article 9 regarding assignment and subletting, all of the provisions, terms, covenants, and conditions of this Lease shall be binding on and inure to the benefit of the parties and their respective heirs, executors, administrators, successors, and assigns.

18.7 **Relationship.** Nothing contained in the Lease shall be deemed or construed by the parties or by a third person to create the relationship of principal and agent or of partnership, or of joint venture, or any association between Landlord and Tenant.

18.8 **Entire Agreement; Modification.** This Lease and all exhibits and/or addendums, and/or riders, if any, attached to this Lease are hereby made part of this Lease, with full force and effect as if set forth herein. This Lease supersedes all prior agreements between the parties and sets forth all the covenants, promises, agreements, and conditions, and understandings between Landlord and Tenant concerning the Premises, and there are no actual or implied covenants, promises, agreements, conditions, or understandings, either oral or written, between them other than as are set forth herein and none thereof shall be used to interpret, construe, supplement, or contradict on Landlord or Tenant unless reduced to writing and signed by each party.

18.9 **Time of Essence.** Time is of the essence with respect to the performance of every provision of this Lease in which time performance is specified. Suppose the Tenant elects to dispute any billing or reconciliation from the Landlord. In that case, the Tenant must do so within 180 days after the Tenant's receipt of such billing or reconciliation, or the Tenant shall be deemed to have waived all rights to so dispute the same.

19. **Survival of Obligations.** All obligations of the Tenant accrued as of the date of acceptance or rejection of this Lease due to the bankruptcy of the Tenant, and those accrued as

of the date of termination or expiration of this Lease for any reason whatsoever, shall survive such acceptance, rejection, termination, or expiration.

IN WITNESS WHEREOF, the parties hereto have executed this Lease as of the date first written above.

LANDLORARD: CENTER ON DEAFNESS	**TENANT: LITTLE EINSTEINS ACADEMY & DAYCARE**
3444 Dudeed Rd, Northbrook, IL 60062	755 Huehl Rd, Northbrook, IL 60062

Lupe Villanueva

Executive Director Signature/Date

Center on Deafness

Lukasz Sokolowski

Signature/Date

Piotr Bleszko

Signature/Date

EXHIBIT A

DEPICTION OF PREMISES

PRELIMINARY REVIEW
PRE-25-17: 755 HUEHL ROAD
APPLICATION SUMMARY

Applicant:	Little Einsteins Academy & Daycare, Inc.
Site Location:	755 Huehl Road
Requested Action:	Special Permit for Child Daycare Services in IB District
Proposal:	Allow a child daycare facility in the building.
Existing Zoning & Land Use:	IB Institutional Building District; Center for Deafness
Surrounding Zoning & Land Use:	North: IB Institutional Building; Public Works South: OS Open Space; Park District Golf Course East: O-2 Office Building; Office West: C-2 Neighborhood Commercial & R-2 Single Family Residential; Red's Garden Center & Single Family Home
Comprehensive Plan Designation:	Institutional Facility

ZONING MAP

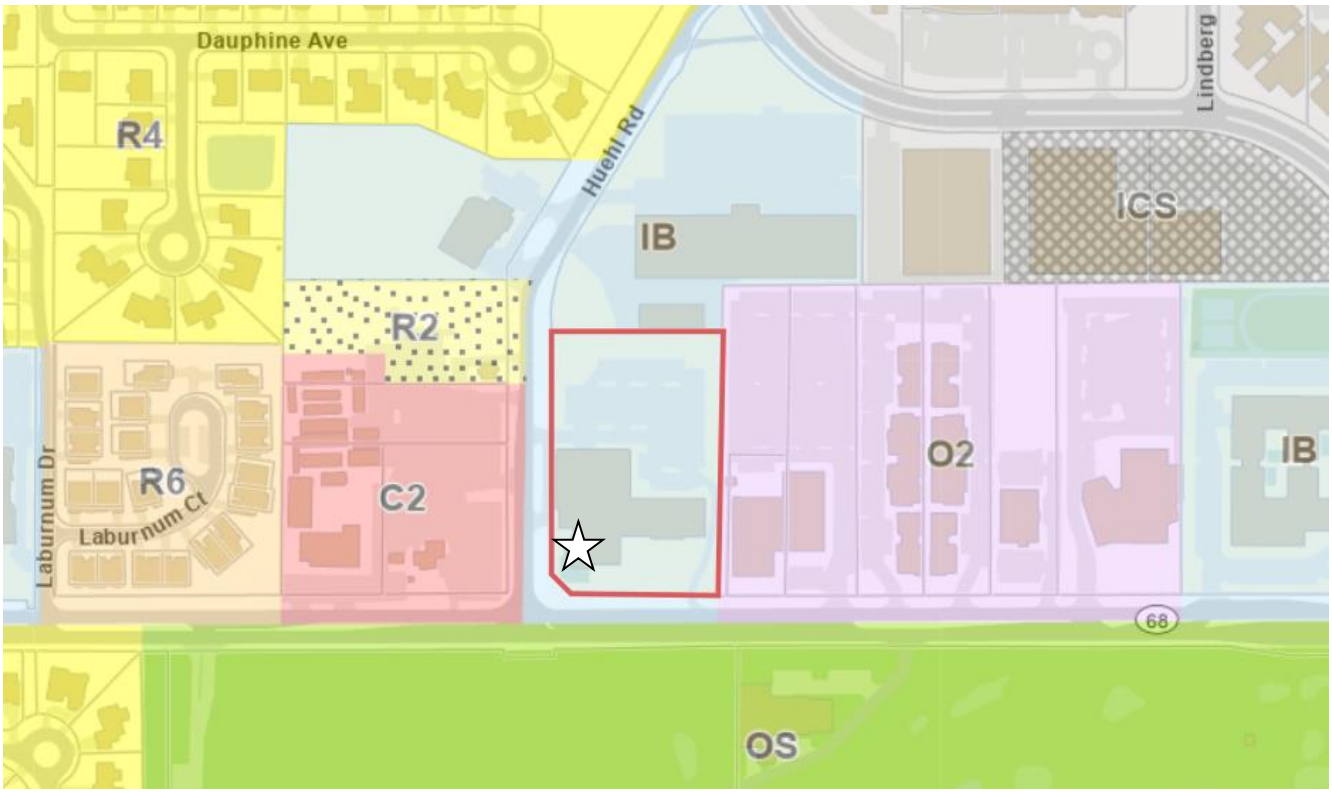

COMPREHENSIVE PLAN MAP

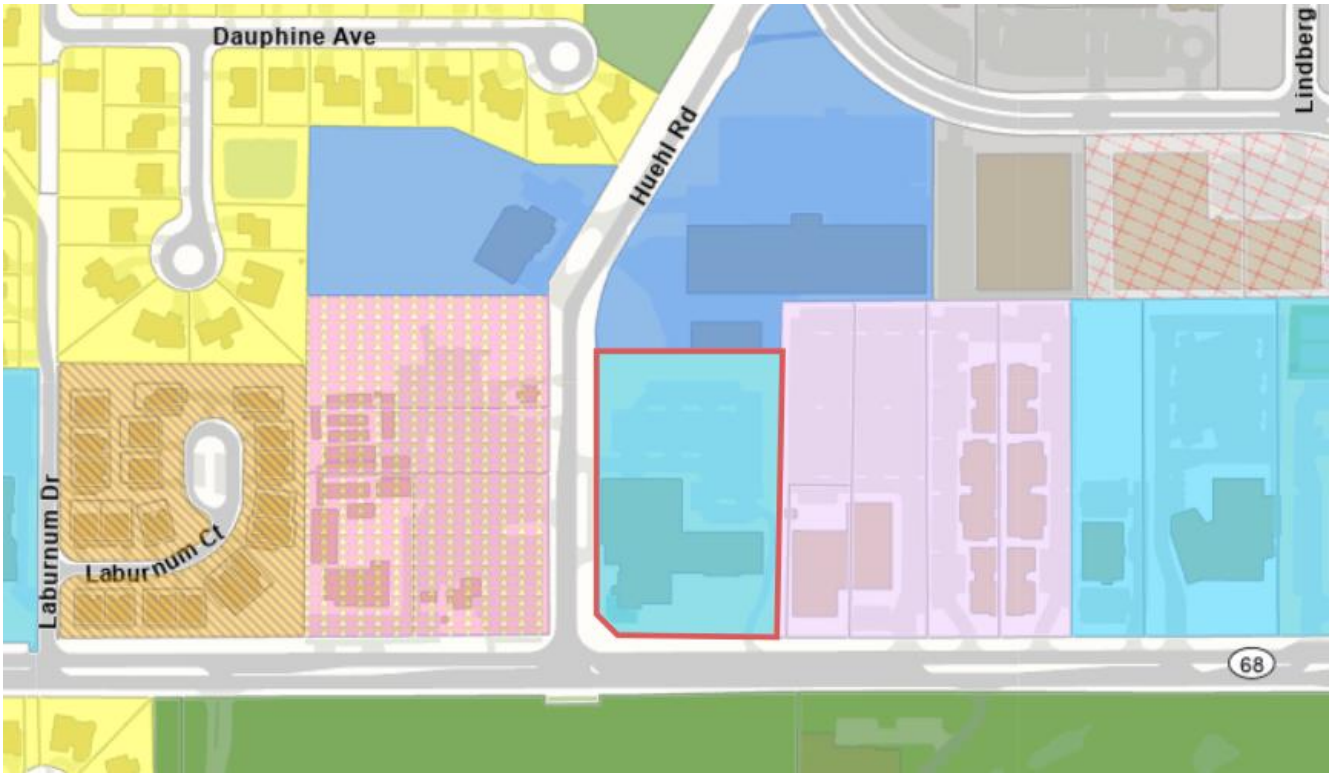

Legend

- Open Space & Outdoor Recreation
- Single Family
- Single Family Large Lot
- Multi-Family up to 6 DUA
- Multi-Family 6-9 DUA
- Multi-Family 9-15 DUA
- Multi-Family over 15 DUA
- Senior or Special Residential
- Government Facility
- Institutional Facility
- Neighborhood Office
- Neighborhood Edge 1
- Neighborhood Edge 2
- Office - Professional
- Office - Corporate/Corridor
- Community Retail
- Major Retail
- Industrial & Commercial Service
- General Industrial, Warehouse & Office
- Major Industrial/Distribution
- Transportation, Comm. & Utilities
- Village Center Mixed Use
- Techny Area Multi-Use
- Major Corridor Multi-Use
- Techny Area

GISConsortium



Legend

0 1000 2000 ft

Print Date: 7/14/2025

Notes

Disclaimer: The GIS Consortium and MGP Inc. are not liable for any use, misuse, modification or disclosure of any map provided under applicable law. This map is for general information purposes only. Although the information is believed to be generally accurate, errors may exist and the user should independently confirm for accuracy. The map does not constitute a regulatory determination and is not a base for engineering design. A Registered Land Surveyor should be consulted to determine precise location boundaries on the ground.

GISConsortium



Legend

0 300 600 ft

Print Date: 7/14/2025

Notes

Disclaimer: The GIS Consortium and MGP Inc. are not liable for any use, misuse, modification or disclosure of any map provided under applicable law. This map is for general information purposes only. Although the information is believed to be generally accurate, errors may exist and the user should independently confirm for accuracy. The map does not constitute a regulatory determination and is not a base for engineering design. A Registered Land Surveyor should be consulted to determine precise location boundaries on the ground.


755 Huehl Road – Proposed Day Care with Existing Outdoor Play Area

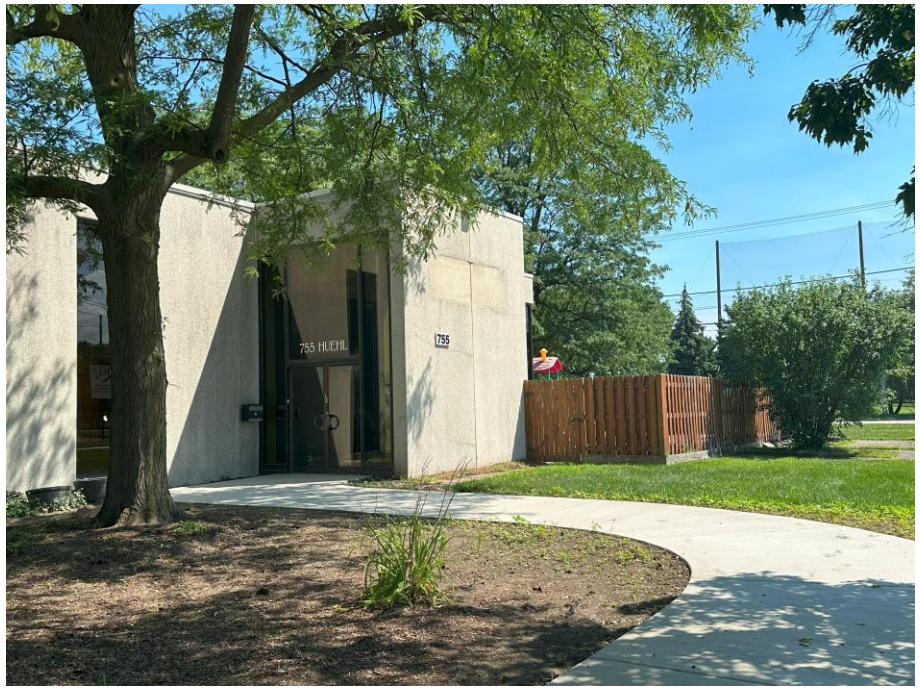
755 HUEHL
755


NO
PARKING
FIRE
LANE


755


Center on Deafness
MAIN ENTRANCE

August 12, 2025

755 Huehl Road: Child Day Care Facility Preliminary Review

Northbrook Board of Trustees Meeting

Zoning Relief Process

1

- **Preliminary Review of Sketch Plan by Board of Trustees**
- The Board reviews schematic plans of the proposal.
- The Board of Trustees provides initial comments on a proposal, indicating whether or not they see major issues that need to be addressed by the Applicant before they submit detailed plans.
- The Board of Trustees provides direction for a designated body to conduct the Public Hearing on the application if a formal application is filed.

2

- **Technical Review of Formal Application**
- Applicant files Formal Application
- Review of detailed plans, traffic study, financial impact analysis, etc. by Village Staff (Engineering, Police, Fire, Public Works, Zoning, Sustainability) and Village consultants
- Once technical issues are addressed, a public hearing can be scheduled.

3

- **Public Hearing Held by Northbrook Plan Commission or Northbrook Board of Trustees**
- Notice goes to neighbors by certified mail; a sign is posted on the property; and notice is published in the local newspaper.
- The Applicant presents their proposal, the neighbors are able to speak and ask questions/voice concerns.
- The body conducting the public hearing makes a recommendation on the request to approve or deny

4

- **Board of Trustees Review of Recommendations & Makes Decision (approve or deny)**
- The Board of Trustees reviews the record of the public hearing, including all of the public testimony and makes a final decision – they may also ask for further changes before making a decision.
- Board of Trustees adopts documents formally approving or denying the application.

Existing Conditions

755 Huehl Road



Comprehensive Plan Designation
Institutional Facility

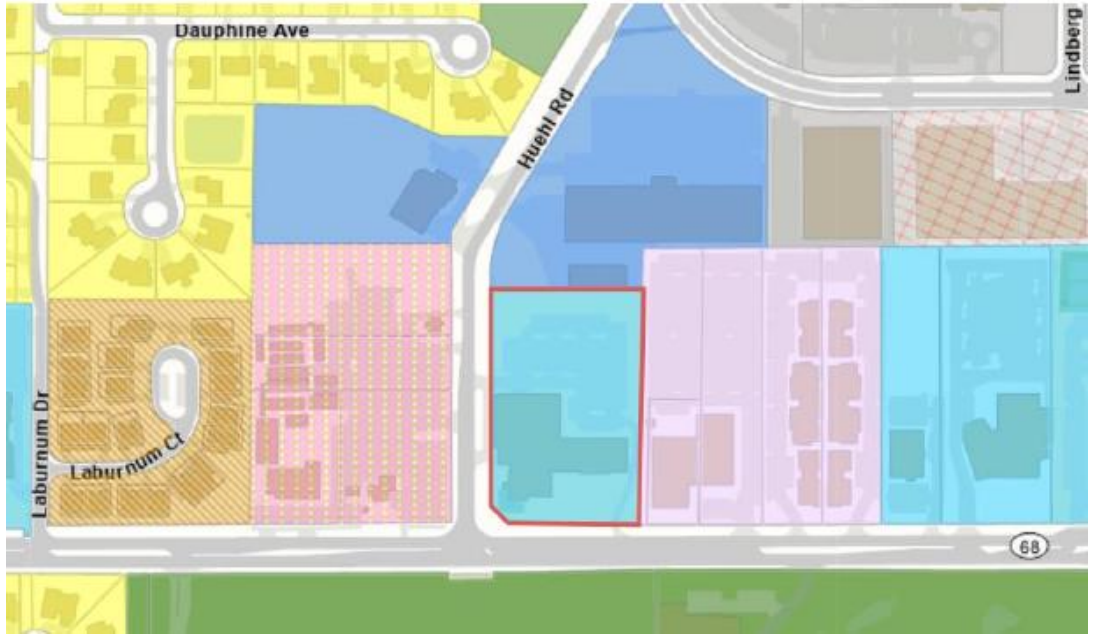

Zoning Map
IB Institutional Building District




755 Huehl Road – Proposed Day Care with Existing Outdoor Play Area

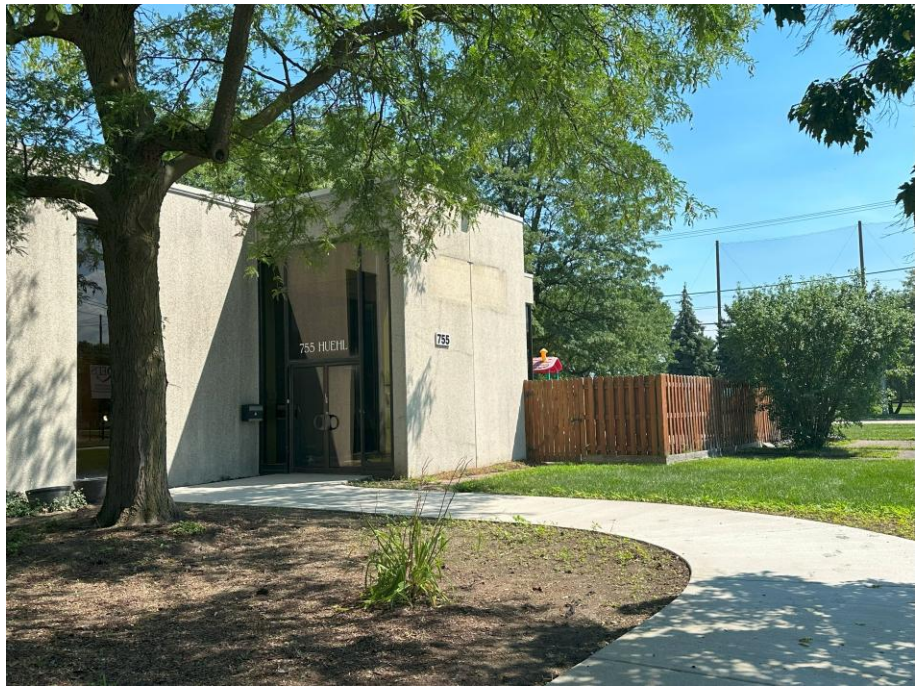
755 HUEHL
755


NO
PARKING
FIRE
LANE


755


Center on Deafness
MAIN ENTRANCE

Proposed Plan

Proposed Plan

- **Little Einstein's Academy & Daycare, Inc. - Applicant**
- Tenant space: 6,200sf (same as previous daycare)
- Serving children two to twelve yrs (96 children)
- Drop-off/Pick-up inside the facility
- Hours of Operation: 7:00am – 6:00pm (No weekend)
- 14 employees
- Existing Outdoor Fenced Play Area
- Parking – 24 required for daycare



Zoning Relief

Zoning Relief

Special Permit for Child Day Care Services (SIC No. 8351.00) in the IB Institutional Building District.

Items to Consider

Items to Consider

a) Is the proposed child daycare use appropriate on the Subject Property?

b) Is it acceptable to grant a special permit for a child day care on the Subject Property in the IB Institutional District?

   i. If so, should there be any operational limitations?

c) Does the Board concur with the staff recommendation that the public hearing for the requested re-lief be conducted by the Plan Commission?

August 12, 2025

755 Huehl Road: Child Day Care Facility Preliminary Review

Northbrook Board of Trustees Meeting

MEMORANDUM

To: Village Manager Cara Pavlicek
From: Director of Development and Planning Services Amy McEwan
Date: 2025-08-12
Subject: Preliminary Review of a Request by Huntington National Bank for a Special Permit for an Accessory Drive-Through Facility at 40 Skokie Boulevard

Overview

The applicant intends to modify a portion of the parking lot and construct an ATM drive-through facility for Huntington National Bank, which will be a tenant within the building on-site.

Fiscal Impact

N/A.

Recommendation

The Village Board is asked to comment on the proposal and approve a motion that the public hearing be conducted by the Plan Commission.

Background

The applicant Huntington National Bank has requested the following zoning relief to allow an accessory drive-through for an ATM facility within the parking lot at the property commonly known as 40 Skokie Boulevard:

A. Special Permit for Accessory Drive-Through Facility (SIC No. 9980.00) in O-3 General Office District; and
B. Site Plan Approval.

In reviewing this request, we suggest the Board consider the following policy questions:

a. Is the proposed drive-through facility an appropriate use on the property?
b. Is it acceptable to grant a special permit for an accessory drive-through facility on the property in the O-3 General Business District?
    a. If so, should there be any operational limitations?
c. Is the location and design of the facility within the parking lot appropriate?
d. Does the Board concur with the staff recommendation that the public hearing for the requested relief be conducted by the Plan Commission?

The property at 40 Skokie Boulevard is described as being:

- located at southwest corner of Lake Cook Road and Skokie Boulevard;
- approximately 204,848 square feet (4.70 acres) in size;
- improved with a six-story multi-tenant office building (111,925 square feet building);
- zoned O-3 General Office District;
- designated as appropriate for Office – Corporate/Corridor in the Comprehensive Plan's Future Land Use;
- surrounded by properties with land uses as depicted on the attached Application Summary;
- not located within the 100-year flood plain; and
- not located in proximity to any areas identified in the Master Stormwater Management Plan.
- The Village's Bicycle and Pedestrian Plan designates Skokie Boulevard in front of the property for a Shared Use Path (facilities separated from roadways for use by bicyclists and pedestrians).

The proposed plan notes:

- Huntington National Bank will occupy a portion of the first floor of the six-story office building on Skokie Boulevard for banking and financial services. A Depository Institution (SIC No. 6000.01) is a permitted use in the O-3 District. The applicant has stated that the bank operations require a drive-up ATM service, however, due to the orientation of the building they cannot establish an attached drive-through facility. Therefore, the applicant is proposing a drive-up ATM facility within the southeast portion of the parking lot. An accessory drive-through facility (SIC No. 9980.00) is a special permit in the O-3 District. Details regarding the proposed request are outlined in the attached material submitted by the Applicant.
- The drive-through facility is proposed in the southeast portion of the parking lot and will replace 15 parking spaces with new concrete drive-up island, one ATM kiosk, and new pavement. The existing parking lot drive-aisles are one-way drive and the orientation of the ATM kiosk will maintain the existing drive-aisle pattern.
- The maximum height of the ATM kiosk will be ten feet. The kiosk will include standard wireless alarm system, and video surveillance cameras. The kiosk will also include canopy lights and a site light will be installed adjacent to the ATM facility within the parking lot.
- The kiosk will include corporate colors and signage. Signage will be reviewed in detail at the time of formal application.
- The proposed hours of operation for ATM facility is 24 hours/seven days a week.
- The property currently has 370 parking spaces on-site. The proposed plan will remove 15 parking spaces within the parking lot, with the total remaining 355 parking spaces. Based on the tenant information provided by the applicant for the entire property and the parking analysis submitted, it appears that parking will be in compliance with the requirements of the Zoning Code. Parking will be reviewed in more detail during formal review.

The Applicant and staff will attend the August 12, 2025 Board of Trustees meeting to answer any questions.

Supplemental - Applicant Submittal - 40 Skokie
Supplemental - Application Summary, Aerials, Site Photos - 40 Skokie

Supplemental - Presentation - 40 Skokie

PRELIMINARY REVIEW APPLICATION – ZONING & SUBDIVISION RELIEF**

Prior to applying for preliminary review of requested zoning and/or subdivision relief by the Village Board, the Applicant should schedule a meeting with the Department of Development & Planning Services to discuss the requested relief. ***(**Note: Applications for zoning relief from the Zoning Board of Appeals must use a different application form.)***

The purpose of a preliminary review is to broadly acquaint the Village Board with the applicant's proposal and to provide the applicant with any preliminary views or concerns that members of the Board may have at a time in the process when positions are still flexible and adjustment is still possible. At the meeting at which the preliminary application is considered, any member of the Board of Trustees may make any comments, suggestions or recommendations regarding the preliminary application deemed necessary or appropriate by that member; provided, however, that no final or binding action shall be taken with respect to any preliminary application. Nothing said or done in the course of such review shall be deemed to create, or to prejudice, any rights of the applicant or to obligate the Village Board, or any member of it, to approve or deny any formal application following full consideration thereof as required by this Code.

The following materials are the minimum required for the processing of a preliminary review by the Village of Northbrook's Board of Trustees. There is no filing fee for the preliminary review; however, review of a submitted formal application will require payment of a filing fee(s). If you have questions regarding the completion of this process contact the Development & Planning Services Department at (847) 664-4050.

Current Property Owner Information

Legal Name: Farbman Group

Primary Contact: Andrew Gutman

Address 31700 Middlebelt Road, Suite 225

City, State, Zip Farmington Hills, MI 48334

Phone No. 248-930-9915

Email gutman@farbman.com

Applicant Information

Legal Name Huntington National Bank

Primary Contact: Mr. Collin Lybarger

Company Huntington National Bank

Address 41 S. High Street

City, State, Zip Columbus, OH 43215

Phone No. 614-331-3004

Email Collin.Lybarger@huntington.com

Property Information

(if more than one parcel is involved in the request please include the information for all parcels)

Site Location/Address: 40 Skokie Boulevard

Size of Property: 204,858 sf (4.70 acres) (square feet/acres)

Size of Building Space, if applicable: NA (square feet)

Current Zoning[1]: O-3 General Office District

Current Use of the Property: Commercial Office Bldg

[1] www.northbrook.il.us/zoningmap

OVER →

PROPERTY OWNER'S CONSENT TO FILING OF PRELIMINARY REVIEW APLICAITON

Date: 7/8/2025

Property Address

40 Skokie Boulevard

Northbrook, IL 60062

I, Andrew Gutman, an authorized agent for the Owner of the property located at 40 Skokie Blvd, do herby consent to the filing of the Preliminary Review Application by **Huntington Bank** relating to the request for a special use permit for the purposes of establishing a new drive-up ATM kiosk to be located on southern portion of the property known as 40 Skokie Blvd.

DocuSigned by:
Andrew Gutman
B6B40E884B89445...

Property Owner/Owner Agent Signature

Andrew Gutman

Printed Name

31700 Middlebelt Road, Suite 225, Farmington Hills, MI 48334

Address

248-930-9915

Phone Number

gutman@farbman.com

Email

Project Description

Involving

Huntington National Bank

New Drive-up ATM at 40 Skokie Blvd.

Project Narrative

Huntington National Bank is establishing a new retail branch banking facility on the first floor of the 40 Skokie Boulevard building in Northbrook, IL. In addition to taking over suites 105/105a on the ground floor of the facility, Huntington Bank is proposing that a new Huntington National Bank drive-up ATM Kiosk be established at the far southeast corner of the existing parking lot. At the 40 Skokie Boulevard location, Huntington National Bank is not able to establish any attached drive-thru banking facilities due to the orientation of the existing structure. Huntington National Bank feels that, to serve their clients comprehensive banking needs, a drive-up ATM is a very important component of their banking service offerings.

The proposed location for the drive-up ATM in the existing parking lot is the mutually agreed upon location between the 40 Skokie Blvd. building management team at Farbman Group and Huntington National Bank.

Current parking available at the 40 Skokie Boulevard office building is 370 spaces, and the current required number of spaces for the building, by zoning ordinance, is 352. The proposed improvement will be in the existing parking lot and will encroach upon the number of existing parking spaces available for the building. After the site improvement has been made, the amount of parking available for the building will be at 355 spaces which will continue to exceed the amount required by ordinance.

The site improvements needed will not increase the amount of impervious surface in the proposed area and will not alter how stormwater currently dissipates. Also, existing parking lot traffic patterns will not be altered or changed in any way.

The goal of Huntington National Bank is to establish an efficient, easy to access and use, drive-up ATM that will enhance the banking service offerings they support, and bring a seamless and low impact banking amenity to the 40 Skokie Boulevard complex.

Project Intent

To bring a new Huntington National Bank drive-up ATM to the 40 Skokie Blvd. site.

Project Clarifications

Zoning

O-3 General Office District

Existing Site

- The site limits for the proposed project are within the current site limits of the existing parking lot.
- The site exists at 204,858 sf (4,70 Acres)
- The current site is occupied by the existing 6 story office building.

Proposed Development

- The proposed site improvement will modify the existing parking surface at the far southeast corner of the site but will not alter the existing on-site or off-site traffic patterns or circulation routes. There will be minimal to no changes for existing tenants utilizing the existing parking lot on a daily basis.

Intensity of Use

- The proposed improvement will bring forward a low density, and low impact use.

Hours of Operation

- The ATM will be a operational 24hr a day, seven days a week.

Safety, Security and Lighting

- The proposed ATM island will include a new a new sight lighting standard on the ATM island just south of the proposed ATM kiosk. Lighting levels will comply with Illinois Compiled Statues dictating required lighting levels at ATMs.
- ATM/ATM kiosk will be equipped with standard security feature including wireless alarm and video surveillance cameras.

Surrounding Properties

40 Skokie Blvd. is on a corner lot bordered by:
North: Lake Cook Road
South: Napleton Cadillac of Northbrook
East: Skokie Blvd.
West: Railroad tracks

Landscaping

No landscaping is anticipated for this improvement.

The Hezner Corporation
678 Broadway Street, Suite 100
Libertyville, IL 60048
www.Hezner.Biz
PH: 847-918-3800

40 Skokie Blvd – General Information

Legal Description

PARCEL 1:

THAT PART OF THE EAST 1/2 OF THE NORTHWEST 1/4 OF SECTION 2, TOWNSHIP 42 NORTH, RANGE 12 EAST OF THE THIRD PRINCIPAL MERIDIAN, BOUNDED AND DESCRIBED AS FOLLOWS:

COMMENCING AT THE INTERSECTION OF THE NORTH LINE OF THE NORTHWEST 1/4 OF SAID SECTION 2 WITH THE EASTERLY LINE OF A COMMONWEALTH EDISON COMPANY (PUBLIC SERVICE COMPANY OF NORTHERN ILLINOIS) RIGHT OF WAY, SAID EASTERLY RIGHT OF WAY LINE BEING 155.00 FEET NORTHEASTERLY OF, AS MEASURED AT RIGHT ANGLES, AND PARALLEL WITH THE EASTERLY LINE OF THE ORIGINAL 100-FOOT RIGHT OF WAY OF THE CHICAGO AND NORTHWESTERN RAILROAD COMPANY AS CONVEYED BY WARRANTY DEED RECORDED MARCH 20, 1903 AS DOCUMENT 3365299; THENCE SOUTH 26 DEGREES 02 MINUTES, 41 SECONDS EAST (ON AN ASSUMED BEARING) ALONG SAID EASTERLY LINE OF THE COMMONWEALTH EDISON COMPANY RIGHT OF WAY, A DISTANCE OF 66.82 FEET TO A POINT ON THE SOUTH LINE OF LAKE-COOK ROAD, AS WIDENED BY CONDEMNATION RECORDED SEPTEMBER 21, 1971 AS DOCUMENT 21633506 FOR THE POINT OF BEGINNING; THENCE SOUTH 89 DEGREES, 56 MINUTES, 00 SECOND EAST ALONG THE SOUTH LINE OF LAKE-COOK ROAD, AS WIDENED, A DISTANCE OF 313.87 FEET; THENCE SOUTH 60 DEGREES, 10 MINUTES, 25 SECONDS EAST ALONG A SOUTHERLY LINE OF LAKE-COOK ROAD, AS WIDENED, A DISTANCE OF 39.73 FEET TO THE WESTERLY LINE OF SKOKIE BOULEVARD; THENCE SOUTH 25 DEGREES, 59 MINUTES, 00 SECOND EAST ALONG SAID WESTERLY LINE OF SKOKIE BOULEVARD, A DISTANCE OF 547.54 FEET TO A POINT OF CURVE; THENCE CONTINUING ALONG SAID WESTERLY LINE OF SKOKIE BOULEVARD, ON AN ARC CONVEX TO THE SOUTHWEST, HAVING A RADIUS OF 8235.16 FEET, AN ARC DISTANCE OF 110.11 FEET TO AN INTERSECTION WITH THE CENTERLINE OF VACATED NEW HAMPSHIRE AVENUE, THENCE CONTINUING ON SAID CURVE, AN ARC DISTANCE OF 29.22 FEET; THENCE NORTH 89 DEGREES, 42 MINUTES 05 SECONDS WEST ON A LINE 26.00 FEET SOUTH OF AND PARALLEL TO THE CENTERLINE OF SAID VACATED NEW HAMPSHIRE AVENUE, A DISTANCE OF 94.00 FEET; THENCE NORTH 57 DEGREES, 31 MINUTES, 49 SECONDS WEST, A DISTANCE OF 48.43 FEET TO AN INTERSECTION WITH THE SAID CENTERLINE; THENCE NORTH 89 DEGREES, 42 MINUTES, 05 SECONDS WEST, A DISTANCE OF 153.98 FEET ALONG SAID CENTERLINE TO AN INTERSECTION WITH THE CENTERLINE OF VACATED NEW ENGLAND AVENUE; THENCE SOUTH 00 DEGREE, 01 MINUTE, 30 SECONDS EAST ALONG SAID CENTERLINE, 49.53 FEET; THENCE SOUTH 68 DEGREES, 50 MINUTES, 24 SECONDS WEST, A DISTANCE OF 35.24 FEET TO SAID EASTERLY LINE OF THE COMMONWEALTH EDISON COMPANY RIGHT OF WAY; THENCE NORTH 26 DEGREES, 02 MINUTES, 41 SECONDS WEST 747.72 FEET TO THE PLACE OF BEGINNING, EXCEPTING THEREFROM THAT PART OF THE EAST 1/2 OF THE NORTHWEST 1/4 OF SECTION 2, TOWNSHIP 42 NORTH, RANGE 12 EAST OF THE THIRD PRINCIPAL MERIDIAN, BOUNDED AND DESCRIBED AS FOLLOWS: COMMENCING AT THE INTERSECTION OF THE NORTH LINE OF THE NORTHWEST 1/4 OF SAID SECTION 2 WITH THE EASTERLY LINE OF A COMMONWEALTH EDISON COMPANY (PUBLIC SERVICE COMPANY OF NORTHERN ILLINOIS) RIGHT OF WAY, SAID EASTERLY RIGHT OF WAY LINE, BEING 155.00 FEET NORTHEASTERLY OF, AS MEASURED AT RIGHT ANGLES, AND PARALLEL WITH THE EASTERLY LINE OF THE ORIGINAL 100 FOOT RIGHT OF WAY OF THE CHICAGO AND NORTHWESTERN RAILROAD COMPANY AS CONVEYED BY WARRANTY DEED RECORDED MARCH 20, 1903 AS DOCUMENT 3365299; THENCE SOUTH 26 DEGREES, 02 MINUTES, 41 SECONDS EAST (ON AN ASSUMED BEARING) ALONG SAID EASTERLY LINE OF THE COMMONWEALTH EDISON COMPANY RIGHT OF WAY, A DISTANCE OF 66.82 FEET TO A POINT ON THE SOUTH LINE OF LAKE COOK ROAD, AS WIDENED BY CONDEMNATION RECORDED SEPTEMBER 21, 1971 AS DOCUMENT 21633506; THENCE SOUTH 89 DEGREES, 56 MINUTES, 00 SECOND EAST ALONG THE SOUTH LINE OF SAID LAKE COOK ROAD, AS WIDENED, A DISTANCE OF 313.87 FEET; THENCE SOUTH 60 DEGREES, 10 MINUTES, 25 SECONDS EAST ALONG A SOUTHERLY LINE OF LAKE COOK ROAD, AS WIDENED, A DISTANCE OF 39.73 FEET TO THE WESTERLY LINE OF SKOKIE BOULEVARD; THENCE WESTERLY TO A POINT ON THE EASTERLY LINE OF THE COMMONWEALTH EDISON COMPANY RIGHT OF WAY AFORESAID, SAID POINT BEING 100 FEET SOUTH OF (AS MEASURED AT RIGHT ANGLES) THE NORTH LINE OF SAID NORTHWEST 1/4; THENCE NORTHWESTERLY ALONG SAID EASTERLY LINE TO THE POINT OF BEGINNING, ALL IN COOK COUNTY ILLINOIS.

PARCEL 2:

NON-EXCLUSIVE EASEMENT APPURTENANT TO AND FOR THE BENEFIT OF PARCEL 1 FOR PEDESTRIAN AND VEHICULAR INGRESS, EGRESS AND PARKING OVER AND UPON THE FOLLOWING DESCRIBED LAND, AS CREATED BY PARKING EASEMENT AGREEMENT DATED MAY 10, 1983 AND RECORDED MAY 17, 1983 AS DOCUMENT 26608668, MADE AMONG NATIONAL BOULEVARD BANK OF CHICAGO, A NATIONAL BANKING ASSOCIATION, AS TRUSTEE UNDER TRUST AGREEMENT DATED JUNE 12, 1981 AND KNOWN AS TRUST
NUMBER 6817 AND NATIONAL BOULEVARD BANK OF CHICAGO, A NATIONAL BANKING ASSOCIATION, AS TRUSTEE UNDER A TRUST AGREEMENT DATED DECEMBER 23, 1980 AND
KNOWN AS TRUST NUMBER 5899:

THAT PART OF THE EAST 1/2 OF THE NORTHWEST 1/4 OF SECTION 2, TOWNSHIP 42 NORTH, RANGE 12, EAST OF THE THIRD PRINCIPAL MERIDIAN, BOUNDED AND DESCRIBED AS FOLLOWS:

COMMENCING AT THE INTERSECTION OF THE NORTH LINE OF THE NORTHWEST 1/4 OF SAID SECTION 2 WITH THE EASTERLY LINE OF A COMMONWEALTH EDISON COMPANY (PUBLIC SERVICE COMPANY OF NORTHERN ILLINOIS) RIGHT OF WAY, SAID EASTERLY RIGHT OF WAY LINE, BEING 155.00 FEET NORTHEASTERLY OF, AS MEASURED AT RIGHT ANGLES, AND PARALLEL WITH THE EASTERLY LINE OF THE ORIGINAL 100-FOOT RIGHT OF WAY OF THE CHICAGO AND NORTHWESTERN RAILROAD COMPANY AS CONVEYED BY WARRANTY DEED RECORDED MARCH 20, 1903 AS DOCUMENT 3365299; THENCE SOUTH 26 DEGREES, 02 MINUTES, 41 SECONDS EAST (ON AN ASSUMED BEARING) ALONG SAID EASTERLY LINE OF THE COMMONWEALTH EDISON COMPANY RIGHT OF WAY, A DISTANCE OF 66.82 FEET TO A POINT ON THE SOUTH LINE OF LAKE-COOK ROAD, AS WIDENED BY CONDEMNATION RECORDED SEPTEMBER 21, 1971 AS DOCUMENT 21633506 FOR THE POINT OF BEGINNING; THENCE SOUTH 89 DEGREES, 56 MINUTES, 00 SECONDS EAST ALONG THE SOUTH LINE OF LAKE-COOK ROAD, AS WIDENED, A DISTANCE OF 313.87 FEET; THENCE SOUTH 60 DEGREES, 10 MINUTES, 25 SECONDS EAST ALONG A SOUTHERLY LINE OF LAKE-COOK ROAD, AS WIDENED, A DISTANCE OF 39.73 FEET TO THE WESTERLY LINE OF SKOKIE BOULEVARD; THENCE SOUTH 25 DEGREES, 59 MINUTES, 00 SECONDS EAST ALONG SAID WESTERLY LINE OF SKOKIE BOULEVARD, A DISTANCE OF 547.54 FEET TO A POINT OF CURVE; THENCE SOUTHEASTERLY ON A CURVE CONVEX TO THE SOUTHWEST, HAVING A RADIUS OF 8235.16 FEET, AN ARC DISTANCE OF 110.11 FEET TO AN INTERSECTION WITH THE CENTERLINE OF VACATED NEW HAMPSHIRE AVENUE; THENCE NORTH 89 DEGREES, 42 MINUTES, 05 SECONDS WEST ALONG SAID CENTERLINE, A DISTANCE OF 149.70 FEET TO A PLACE OF BEGINNING; THENCE SOUTH 68 DEGREES, 50 MINUTES, 24 SECONDS WEST, A DISTANCE OF 135.38 FEET TO AN INTERSECTION WITH THE CENTERLINE OF VACATED NEW ENGLAND AVENUE; THENCE NORTH 00 DEGREES, 01 MINUTES, 30 SECONDS WEST ALONG SAID CENTERLINE, A DISTANCE OF 49.53 FEET TO THE CENTERLINE OF AFORESAID VACATED NEW HAMPSHIRE AVENUE; THENCE SOUTH 89 DEGREES, 42 MINUTES, 05 SECONDS EAST 126.28 FEET ALONG SAID CENTERLINE TO THE PLACE OF BEGINNING ALL IN COOK COUNTY, ILLINOIS.

Zoning:

O-3 General Office District

Number of Floors:

6 Story Facility

Floor plan area:

	Gross Area	Net Area
Level One:	17,775 sf	11,640 sf
Level Two:	17,830 sf	13,090 sf
Level Three:	19,320 sf	16,000 sf
Level Four:	19,160 sf	15,840 sf
Level Five:	19,000 sf	15,680 sf
Level Six:	18,840 sf	15,520 sf
Total:	111,925 sf	87,770 sf

Occupancy:

B- business

Parking:

Retail Use = 1/250 net sf
Finance, Insurance, and Real Estate = 1/250 net sf
Business and Professional Use = 1/250 net sf
Services = 1/250 net sf

Required Parking:	352 (87,770 sf / 250)
Currently Available Parking:	370 *Compliant*
Available Parking After Site Alterations:	355 *Compliant*

Current Tenants

- Suite 01DB FedEx Drop Box
- Suite 105/105a Wolf and Solovy, LLP
- Suite 110 Comprehensive GI Health
- Suite 145 Comprehensive GI Health
- Suite 150 Robert H. Rosenfeld & Associates, LLC
- Suite 152 Talcott Networks
- Suite 200/280 SunCloud Health
- Suite 220 HomeThrive, Inc
- Suite 221 Vacant
- Suite 225 Jack Greenberg and Associates
- Suite 230 Vacant
- Suite 235 Mark Foods
- Suite 240 LaSalle Benefits LLC
- Suite 260 Remedium Health Care Products, LLC
- Suite 300 Association for Women's Heath Care LTD
- Suite 305 Vacant
- Suite 320 Vacant
- Suite 400 Charles E. Alexander PC
- Suite 400 Martin M Brozosky
- Suite 400 Kenneth S Freedman
- Suite 410 Legal Cash Buoy LLC
- Suite 420 First American Title Insurance Co.
- Suite 430 Sanctuary Wealth
- Suite 440 Vacant
- Suite 450 Farbman Group of Chicago
- Suite 460 Midwest Counseling Diagnostics
- Suite 500 The Derm Collective North Shore, PLLC
- Suite 510/520 Sun Cloud Holdings, LLC
- Suite 530 Vacant
- Suite 550 Unified Womens Healthcare, LP
- Suite 600 Clay Consulting
- Suite 604 Vacant
- Suite 605/630 OVA Institute, LLC
- Suite 610 Vacant
- Suite RF01 Chicago SMSA Limited Partnership

Huntington Bank Will leasing Suite(s) 105/105A for on the ground floor for their new branch bank. They will also be taking over a yet to be determined portion of the sixth floor for corporate office functions.



LOCATION MAP
SCALE: NTS



SITE AERIAL
SCALE: NTS

BUILDING DATA - FOR REFERENCE

ZONING:

O-3 GENERAL OFFICE DISTRICT

NUMBER OF FLOORS:

6 STORY FACILITY

FLOOR PLAN AREA:

	GROSS AREA	NET AREA
LEVEL ONE:	17,775 SF	11,640 SF
LEVEL TWO:	17,830 SF	13,090 SF
LEVEL THREE:	19,320 SF	16,000 SF
LEVEL FOUR:	19,160 SF	15,840 SF
LEVEL FIVE:	19,000 SF	15,680 SF
LEVEL SIX:	18,840 SF	15,520 SF
TOTAL:	111,925 SF	87,770 SF

AREA OF CONSTRUCTION:

ALL CONSTRUCTION OCCURS OUTSIDE OF BUILDING IN PARKING LOT WITH THE EXCEPTION OF THE ELECTRICAL CONNECTION TO THE FACILITY

OCCUPANCY:

B- BUSINESS

PARKING:

RETAIL USE = 1/250 NET SF
FINANCE, INSURANCE AND REAL ESTATE = 1/250 NET SF
BUSINESS AND PROFESSIONAL USE = 1/250 NET SF
SERVICES = 1/250 NET SF

REQUIRED PARKING: 352
CURRENTLY AVAILABLE PARKING: 370
AVAILABLE PARKING AFTER SITE ALTERATIONS: 355

LAND USE:

AREA OF SITE = 204,858 SF (4.70 ACRES)

CURRENT IMPERVIOUS SURFACE = 153,490 SF (3.52 ACRES)
PROPOSED IMPERVIOUS SURFACE = 153,490 SF (3.52 ACRES) NO CHANGE

LOCAL CODES

ZONING:

NORTHBROOK ZONING CODE

BUILDING:

2018 INTERNATIONAL BUILDING CODE

2014 ILLINOIS STATE PLUMBING CODE - LOCAL AMMENDMENTS

2017 NATIONAL ELECTRICAL CODE - LOCAL AMMENDMENTS

2015 NFPA LIFE SAFETY CODE

2018 INTERNATIONAL FIRE PREVENTION CODE

2018 INTERNATIONAL MECHANICAL CODE

2021 INTERNATIONAL ENERGY CONSERVATION CODE - LOCAL AMMENDMENTS

2015 INTERNATIONAL PROPERTY MAINTENANCE CODE

2018 INTERNATIONAL FUEL GAS CODE

INTERNATIONAL EXISTING BUILDING CODE

WILDLAND - URBAN INTERFACE CODE

ADA:

2018 ILLINOIS ACCESSIBILITY CODE

FEDERAL ADA GUIDELINES

*ALL REFERENCED STANDARDS IN ABOVE CODES

INDEX OF DRAWINGS

COVER SHEET
G-001 COVER SHEET

PLAT OF SURVEY
SS001 PLAT OF SURVEY

ARCHITECTURAL
A001 EXISTING AREA PLANS FOR REFERENCE

ARCHITECTURAL - SITE
AS101 DEMOLITION SITE PLAN
AS102 NEW SITE PLANS
AS202 ATM KIOSK ELEVATIONS

Huntington

New Drive-up ATM Kiosk

40 Skokie Blvd.
Northbrook, IL 60062

Hezner

The Hezner Corporation
Architectural Services

678 Broadway Street, Suite 100
Libertyville, IL 60048-2325

Ph.: (847)-918-3800
Fax: (847)-549-7633
Email: hezner@hezner.biz

Architect's Seal & Signature

PRELIMINARY
NOT FOR
CONSTRUCTION

Drawn By: EWW

Checked By: SKH

©Copyright 2025
The Hezner Corporation
Libertyville, Illinois 60048-2325

Date:	Issued For:
7/07/2025	PRELIMINARY
	REVEIW
	APPLICATION

REVISION SCHEDULE

Rev.	Date:	Issued For:

Project Title

Huntington

New Drive-up ATM Kiosk

40 Skokie Blvd Northbrook, IL 60062

Sheet Title

COVER SHEET

Architect's Project Number

JS25047

G-001

Legend of Symbols & Abbreviations

Power Pole	Wood-rail Fence	N.	North
Light Pole	Chain Link Fence	S.	South
Transformer	Guard Rail	E.	East
Utility Pedestal	Iron Fence	W.	West
Gas Valve	Field Tile Section	°	Degrees
Water Valve	Found Iron Rod	'	Feet or Minutes
B-Box	Found Iron Pipe	"	Inches or Seconds
Manhole	Monitoring Well	Sq.	Square
Catch Basin	Parking Stop	Ft.	Feet
Fire Hydrant	Bollard	Vol.	Volume
Electric Meter	Soil Boring Location	Pg.	Page
Gas Meter	Concrete	Calc.	Calculated
Ground Light	Buried Utilities	Rec.	Record
Air Conditioner	Telephone	Meas.	Measured
Traffic Signs	Gas	ROW	Right of Way
Sign	Electric	CL	Centerline
Flag Pole	DIRT Compact Area	P.U.E.	Public Utility Easement
ST—Storm Sewer	SAN—Sanitary Sewer	(C)	Survey Meaning

Items Corresponding to Schedule B

(B) GRANT OF EASEMENT TO COMMONWEALTH EDISON COMPANY, ITS SUCCESSORS AND ASSIGNS, TO INSTALL, MAINTAIN, REPAIR AND OPERATE THE ELECTRICITY DISTRIBUTION FACILITIES, AND TO GRANT OF ACCESS THERETO, AS CONTAINED IN WRITTEN INSTRUMENT RECORDED, AND DOCUMENT SYSTEM AND THE TERMS AND PROVISIONS CONTAINED THEREIN. (AFFECTS PARCEL 1 - ITEM DOES APPLY AND IS PLOTTED)

(C) GRANT OF EASEMENT FOR ENGINEERING AND SERVICES AS DESCRIBED IN GRANT RECORDED MAY 7, 1940 AS DOCUMENT 12104139 MADE BY AND BETWEEN THE NATIONAL BANK OF WILMETTE, NOT PERSONALLY BUT AS TRUSTEE UNDER TRUST NO. 1010, AND THE COMMONWEALTH EDISON COMPANY, A CORPORATION OF ILLINOIS, AND ITS SUCCESSORS AND ASSIGNS, TO INSTALL, OPERATE AND MAINTAIN ALL SUCH EQUIPMENT AND FACILITIES AS SAID COMPANY SHALL DEEM NECESSARY FOR THE PURPOSE OF SERVING THE PREMISES AND OTHER PREMISES WITH ELECTRIC CURRENT AND FOR COMMUNICATIONS PURPOSES, ALL IN THE STRIP OF LAND AS SET FORTH IN SAID GRANT. (AFFECTS PARCEL 1 - ITEM DOES APPLY AND IS PLOTTED, SEE HATCHED EASEMENT AREA)

(D) CONDITIONS AND RESTRICTIONS CONTAINED IN DEED OR DECREE RECORDED AS NO. 26, 1962 AS DOCUMENT LR3060414 MADE BY LA SALLE NATIONAL BANK AS TRUSTEE UNDER TRUST NUMBER 43443 AND THE TERMS AND PROVISIONS CONTAINED THEREIN. (AFFECTS PARCEL 1 - ITEM DOES APPLY AND IS NOT PLOTTED)

(E) GRANT OF EASEMENT TO THE VILLAGE OF NORTHBROOK OR DISTRICT FOR CERTAIN AS CONTAINED IN DEED RECORDED NOV. 26, 1962 AS DOCUMENT LR3060414 AND RECORDED MAY 16, 1963 AS DOCUMENT 18859000 AND THE TERMS AND CONDITIONS CONTAINED THEREIN. (AFFECTS PARCEL 1 - ITEM DOES APPLY AND IS PLOTTED)

(F) EASEMENT FOR UNDERGROUND UTILITY AND STORM SEWER SERVICES UNDER THE NORTH 15 FEET OF VACATED ALLEY HEREIN AS RESERVED IN ORDINANCE NO. 82-19 VACATING CERTAIN EMPLOYEE AVENUE RECORDED AS DOCUMENT 26004142 AND THE TERMS AND PROVISIONS CONTAINED THEREIN. (AFFECTS PARCEL 1 - ITEM DOES APPLY AND IS PLOTTED)

(G) EASEMENT GRANTED TO THE VILLAGE OF NORTHBROOK FOR A PUBLIC WATERMAIN FACILITIES AND UTILITY RIGHTS AS SET FORTH IN INSTRUMENT RECORDED AS DOCUMENT R2007-167744 AND AS AMENDED BY DOCUMENT R2008-000 AND AS RE-RECORDED AS DOCUMENT R2008-000 AND THE TERMS AND PROVISIONS CONTAINED THEREIN. (AFFECTS PARCEL 1 - ITEM DOES APPLY AND IS PLOTTED)

(H) EASEMENT FOR A 10 FOOT WATERMAIN GRANTED BY ANTHONY T. & LOUISE EMMA DAVIS GRANTED TO THE VILLAGE OF NORTHBROOK RECORDED AS DOCUMENT R2007-167744 AND THE TERMS AND PROVISIONS CONTAINED THEREIN. (AFFECTS PARCEL 1 - ITEM DOES APPLY AND IS PLOTTED)

(I) TERMS, CONDITIONS AND PROVISIONS OF THE DOCUMENT CREATING THE EASEMENT RECORDED AS DOCUMENT LR3060414 (UNABLE TO LOCATE FROM RECORD) - RELATING TO THE ALLOWING OWNERS IN FEE TO THE CONSTRUCTION OF SIDEWALKS. (BLANKET IN NATURE AND NOT PLOTTED)

Miscellaneous Notes

(MN1) ALL FIELD MEASUREMENTS MATCH RECORD DIMENSIONS WITHIN THE PRECISION REQUIREMENTS OF ALTA/ACSM SPECIFICATIONS.

(MN2) ALL STREETS SHOWN ARE PUBLIC RIGHT OF WAY, UNLESS OTHERWISE NOTED.

(MN3) ASSUMED BEARING: THE WEST RIGHT OF WAY LINE OF SKOKIE BOULEVARD TO BE SOUTH 25 DEGREES 59 MINUTES 00 SECONDS EAST.

(MN4) AT THE TIME OF THIS SURVEY THERE IS NO RECORD OR OBSERVED EVIDENCE OF A CEMETERY OR BURIAL GROUND.

(MN5) AT THE TIME OF THIS SURVEY, THE ADDRESS WAS POSTED AS 40 SKOKIE BOULEVARD.

(MN6) THE SUBJECT PROPERTY HAS DIRECT ACCESS TO AND FROM SKOKIE BOULEVARD WHICH IS GOVERNED BY THE VILLAGE OF NORTHBROOK.

(MN7) IN REGARDS TO TABLE "A" ITEM 16, AT THE TIME OF THIS SURVEY, THERE WAS NO VISIBLE EVIDENCE OF EARTH MOVING WORK, BUILDING CONSTRUCTION OR BUILDING ADDITIONS.

(MN8) IN REGARDS TO TABLE "A" ITEM 17, AT THE TIME OF THIS SURVEY, THERE WAS NO RECENT STREET OR SIDEWALK CONSTRUCTION OR PROPOSED RIGHT OF WAY CHANGES PROVIDED.

(MN9) IN REGARDS TO TABLE "A" ITEM 18, AT THE TIME OF THE SURVEY, THERE WERE NO OBSERVABLE EVIDENCE OF SITE USE AS A SOLID WASTE DUMP, SUMP OR SANITARY LANDFILL.

(MN10) IN REGARDS TO TABLE "A" ITEM 19, AT THE TIME OF THE SURVEY, THERE WAS NO STAKED WETLAND DELINEATION TO REFERENCE ON THIS SURVEY.

(MN11) IN REGARDS TO TABLE "A" ITEM 21, PROFESSIONAL LIABILITY INSURANCE IN THE AMOUNT OF $1,000,000 IS IN EFFECT.

(MN12) PARCELS ARE CONTIGUOUS AND THERE ARE NO GAPS OR OVERLAPS.

Utility Notes

(UN1) The location of Utilities shown hereon are from observed evidence of above ground appurtenances only. The surveyor was not provided with underground plans to determine the location of any subterranean uses.

Significant Observations

NONE.

Vicinity Map



Zoning Information

The Surveyor was provided with the zoning information by the insurer pursuant to Table A item 6b. PZR report #91059-1, dated 01/25/2016.

Existing Zoning - (C0) General Office District, with a 0.5 (FAR) Floor Area Ratio

Setbacks:
Front/Corner Side - 80' / Yard - 50'
Interior Side - 50' / Yard - 5'
Rear - 30' / Yard - 5'

Maximum Building Height - 70 Ft. / 5 Stories
Minimum Lot Size - 80,000 Sq. Ft.
Minimum Lot Width - 200 Ft.

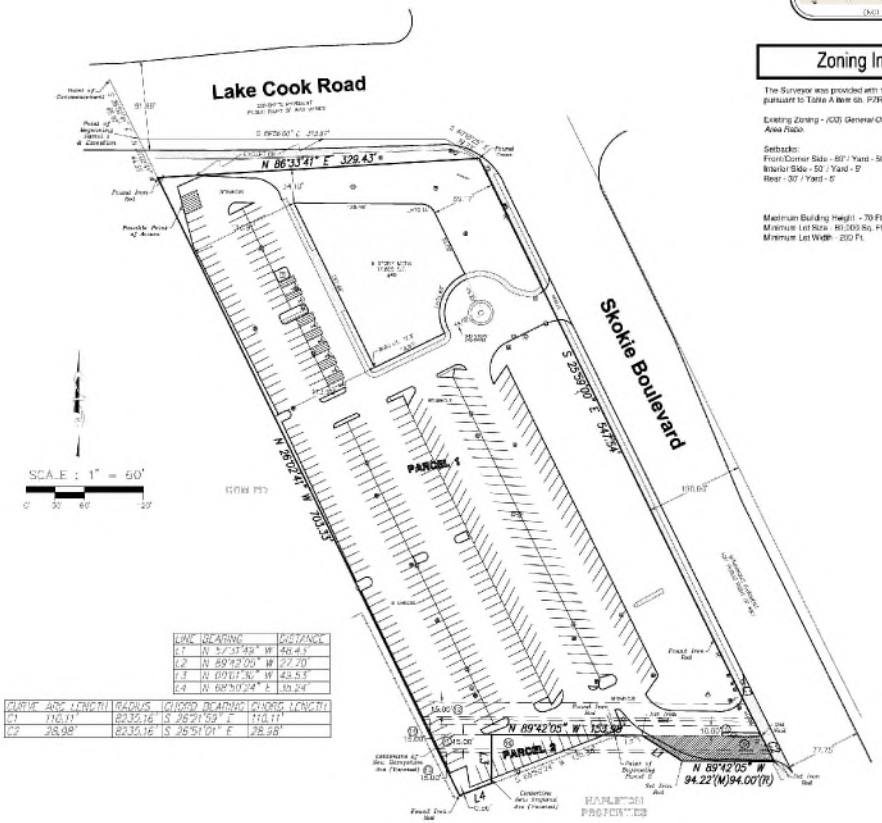

LINE	BEARING	DISTANCE
L1	N 57°57'43" W	46.43'
L2	N 89°42'05" W	27.70'
L3	N 00°17'55" W	43.55'
L4	N 68°50'24" E	10.24'

CURVE	ARC LENGTH	RADIUS	CHORD BEARING	CHORD LENGTH
C1	110.11'	2230.16'	S 26°21'59" E	110.11'
C2	28.98'	2230.16'	S 26°51'01" E	28.98'

FLOOD NOTE:

BY GRAPHIC PLOTTING ONLY, THIS PROPERTY IS IN ZONE(S) X OF THE FLOOD INSURANCE RATE MAP, COMMUNITY PANEL No. 17031C0053 J WHICH BEARS AN EFFECTIVE DATE OF 8/19/2008 AND IS NOT IN A SPECIAL FLOOD HAZARD AREA, BY GRAPHIC SCALE. / / 7/2015 TO THE NATIONAL FLOOD INSURANCE PROGRAM (NFIP) THAT WE BELIEVE WE HAVE LOCATED THIS COMMUNITY DOES CURRENTLY PARTICIPATE IN THE PROGRAM. NO FIELD SURVEYING WAS PERFORMED TO DETERMINE THIS ZONE AND AN ELEVATION CERTIFICATE MAY BE NEEDED TO VERIFY THIS DETERMINATION OR APPLY FOR A VARIANCE FROM THE FLOOD INSURANCE PROGRAM AGENCY.

PARCEL 1: 201,731.09 SF± OR 4.63 ACRES±
PARCEL 2: 3,127.37 SF± OR 0.07 ACRES±
TOTAL: 204,858.46 SF± OR 4.70 ACRES±

COPYRIGHT 2016
by Bock & Clark, Corp.
This product style and format is protected by Copyright, and all rights are reserved. The use of this style and format is strictly prohibited without the written consent and permission of Bock & Clark, Corp.

Record Description

PARCEL 1:

THAT PART OF THE NW 1/4 OF THE NORTHEAST 1/4 OF SECTION 3 WITH THE EASTERLY LINE OF A CONSECUTIVE TO BORON COMPANY PUBLIC SERVICE COMPANY OF NORTHERN ILLINOIS IN RIGHT OF WAY, SAID EASTERLY RIGHT OF WAY LINE BEING 100 FEET NORTHEASTERLY OF, AS MEASURED AT RIGHT ANGLES, AND PARALLEL WITH THE EASTERLY LINE OF THE ORIGINAL 100 FOOT RIGHT OF WAY OF THE CHICAGO AND NORTHWESTERN RAILROAD COMPANY AS CONVEYED BY WARRANTY DEED RECORDED MARCH 6, 1909 AS DOCUMENT 4403332, THENCE SOUTH 25 DEGREES 59 MINUTES 00 SECONDS WEST ALONG SAID EASTERLY RIGHT OF WAY LINE, 547.54 FEET TO THE INTERSECTION WITH THE SOUTH LINE OF THE NORTH 15 FEET OF THE VACATED ALLEY IN THE SUBDIVISION OF BLOCK 1 IN THE SUBDIVISION OF THE NORTH 1/2 OF THE NORTHEAST 1/4 OF SECTION 3, AFORESAID; THENCE NORTH 89 DEGREES 42 MINUTES 05 SECONDS WEST ALONG SAID SOUTH LINE OF THE NORTH 15 FEET OF THE VACATED ALLEY, 133.58 FEET TO THE POINT OF BEGINNING; THENCE SOUTH 00 DEGREES 17 MINUTES 55 SECONDS WEST, 43.55 FEET; THENCE NORTH 68 DEGREES 50 MINUTES 24 SECONDS EAST, 10.24 FEET; THENCE SOUTH 21 DEGREES 09 MINUTES 36 SECONDS EAST, 28.98 FEET TO A POINT ON THE NORTHERLY LINE OF SKOKIE BOULEVARD; THENCE SOUTHWESTERLY ALONG SAID NORTHERLY LINE OF SKOKIE BOULEVARD, BEING A CURVE TO THE NORTHWEST HAVING A RADIUS OF 2230.16 FEET, AN ARC DISTANCE OF 110.11 FEET TO THE INTERSECTION WITH THE AFORESAID EASTERLY RIGHT OF WAY LINE OF THE CHICAGO AND NORTHWESTERN RAILROAD COMPANY; THENCE NORTH 25 DEGREES 59 MINUTES 00 SECONDS EAST ALONG SAID EASTERLY RIGHT OF WAY LINE, 700.33 FEET TO THE POINT OF BEGINNING, ALL IN COOK COUNTY, ILLINOIS.

PARCEL 2:

NON-EXCLUSIVE EASEMENT APPURTENANT TO AND FOR THE BENEFIT OF PARCEL 1 FOR PEDESTRIAN AND VEHICULAR ACCESS, ORDERS AND PERMEABILITY AND LIMITED TO THE TERMS OF SECRETION AND AFTER SET FORTH IN PARAGRAPH 6 AND AFTER SET FORTH IN DEED DATED DECEMBER 11, 1962 AND RECORDED AS DOCUMENT 18859000 MADE BY AND BETWEEN THE NATIONAL BANK OF WILMETTE, NOT PERSONALLY BUT AS TRUSTEE UNDER TRUST AGREEMENT DATED DECEMBER 10, 1962 AND KNOWN AS TRUST NUMBER 1010, AND THE COMMONWEALTH EDISON COMPANY, A CORPORATION OF ILLINOIS, AMERICAN TELEPHONE AND TELEGRAPH COMPANY, A NATIONAL BANKING ASSOCIATION, AS TRUSTEE UNDER TRUST AGREEMENT DATED DECEMBER 10, 1962 AND KNOWN AS TRUST NUMBER 43443.

THAT PART OF THE EAST 1/2 OF THE SOUTHWEST 1/4 OF SECTION 3, TOWNSHIP 42 NORTH, RANGE 12 EAST OF THE THIRD PRINCIPAL MERIDIAN, BOUNDED AND DESCRIBED AS FOLLOWS:

COMMENCING AT THE NORTHEASTERLY CORNER OF SAID SOUTHWEST 1/4 OF SECTION 3; THENCE SOUTH 00 DEGREES 17 MINUTES 55 SECONDS WEST ALONG THE EASTERLY LINE OF SAID SOUTHWEST 1/4 OF SECTION 3, 1,320.00 FEET TO THE NORTHERLY LINE OF THE CHICAGO AND NORTHWESTERN RAILROAD COMPANY AS CONVEYED BY WARRANTY DEED RECORDED MARCH 6, 1909 AS DOCUMENT 4403332; THENCE SOUTH 25 DEGREES 59 MINUTES 00 SECONDS EAST ON AN ASSUMED BEARING ALONG SAID EASTERLY LINE OF THE COMMONWEALTH EDISON COMPANY RIGHT OF WAY, A DISTANCE OF 43.80 FEET TO A POINT ON THE SOUTHERLY LINE OF SKOKIE BOULEVARD, AS DEDICATED BY DOCUMENT 18859000, SAID ANGLE POINT BEING THE POINT OF BEGINNING; THENCE SOUTH 89 DEGREES 42 MINUTES 05 SECONDS EAST ALONG THE SOUTHERLY LINE OF SAID BOULEVARD, A DISTANCE OF 94.22 FEET TO A POINT ON THE SOUTHERLY LINE OF THE ORIGINAL 100 FOOT RIGHT OF WAY OF THE CHICAGO AND NORTHWESTERN RAILROAD COMPANY AS CONVEYED BY WARRANTY DEED RECORDED MARCH 6, 1909 AS DOCUMENT 4403332; THENCE SOUTH 25 DEGREES 59 MINUTES 00 SECONDS WEST ON AN ASSUMED BEARING ALONG SAID EASTERLY LINE OF THE COMMONWEALTH EDISON COMPANY RIGHT OF WAY, A DISTANCE OF 43.80 FEET TO A POINT ON THE SOUTHERLY LINE OF SAID BOULEVARD, AS DEDICATED BY DOCUMENT 18859000; THENCE NORTH 89 DEGREES 42 MINUTES 05 SECONDS WEST ALONG SAID SOUTHERLY LINE OF SKOKIE BOULEVARD, A DISTANCE OF 94.22 FEET TO THE POINT OF BEGINNING, ALL IN COOK COUNTY, ILLINOIS.

ABOVE LEGAL DESCRIPTION IS THE PROPERTY DESCRIPTION IN FIRST AMERICAN TITLE INSURANCE COMPANY COMMITMENT NUMBER NCS-754606-CHI2, BEARING AN EFFECTIVE DATE OF DECEMBER 24, 2015.

ALTA/ACSM Land Title Survey

IPT Chicagoland
B&C Project No. 201503730,001
40 Skokie Boulevard, Northbrook, IL
Based on First American Title Insurance Company
Commitment No. NCS-754606-CHI2
bearing an effective date of December 24, 2015.

Surveyor's Certification

To: 40 Skokie Acquisition LLC, an Illinois Limited Liability company and its successors and/or assigns; Wells Fargo Bank, National Association, and its successors and/or assigns; First American Title Insurance Company; and Bock & Clark Corporation.

This is to certify that this map or plat and the survey on which it is based were made in accordance with the 2011 Minimum Standard Detail Requirements for ALTA/ACSM Land Title Surveys, jointly established and adopted by ALTA and NSPS, and includes Items 1, 2, 3, 4, 6b, 7a, 7b1, 7c, 8, 9, 11a, 13, 14, 16, 17, 18, 19 and 21 of Table A thereof. The field work was completed on November 13, 2015.

James L. Harpole
Illinois Professional Land Surveyor No. 3180
In the State of Illinois, Expires: 11-30-2016

Date of First Issue	November 17, 2015
Date of Last Revision	February 01, 2016

THIS PROFESSIONAL SERVICE CONFORMS TO THE CURRENT ILLINOIS MINIMUM STANDARDS FOR A BOUNDARY SURVEY.

Survey Performed By:
JLH Land Surveying Inc.
7222 Courtwright Drive
Plainfield, IL 60586
Phone: 815-729-4300
www.jlhsurvey.com

Network Project No. 201503730,001 Page 1 of 1

Bock & Clark's National Surveyors Network
National Coordinators of ALTA/ACSM Land Title Surveys
3560 W. Market Street, Suite 200, Akron, Ohio 44333
Phone: (800) SURVEYS (787-3897) Fax: (330) 666-9908 www.bockandclark.com

BOCK & CLARK EST. 1973

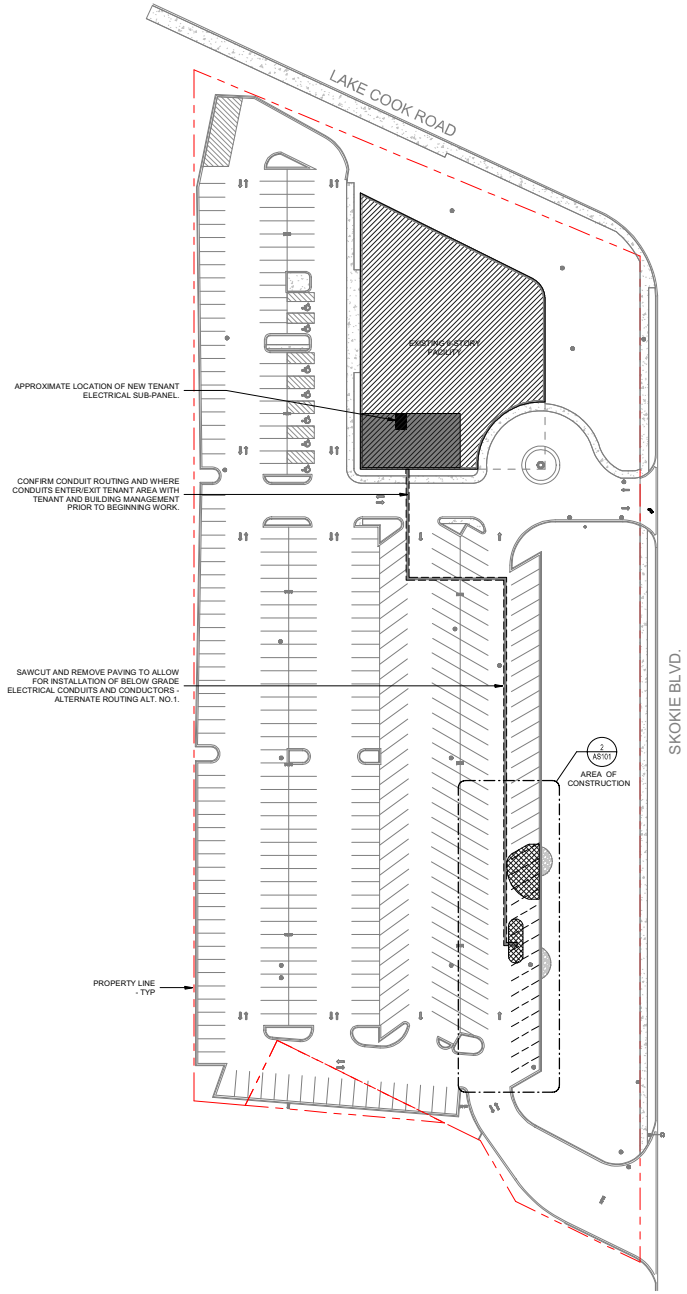

1 DEMOLITION SITE PLAN
1" = 40'-0"

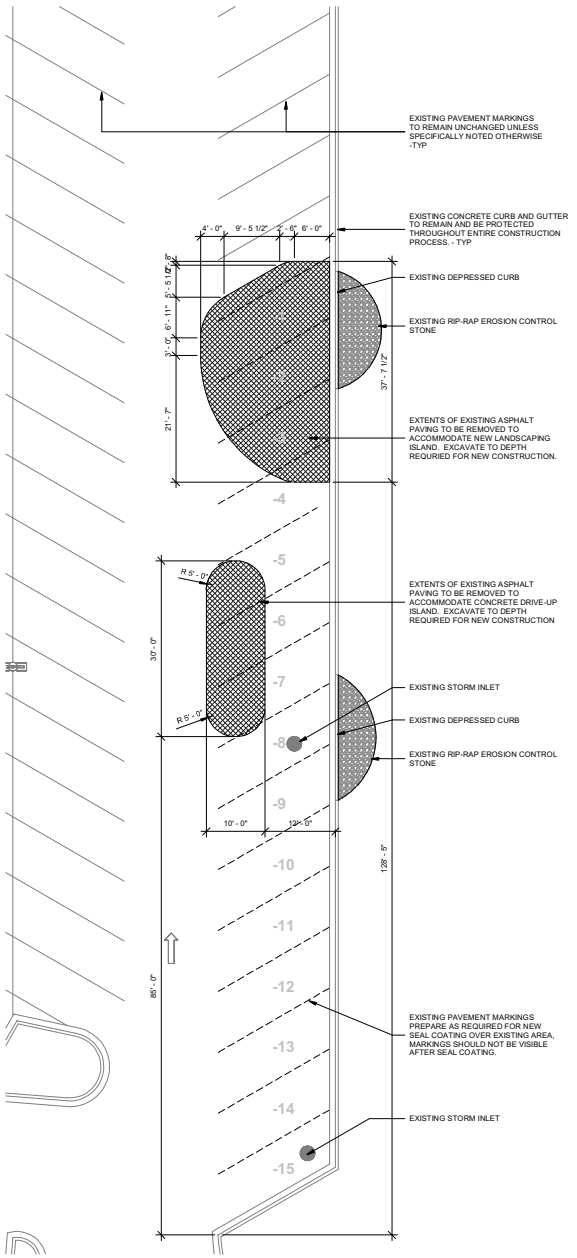

2 ENLARGED SITE PLAN - DEMOLITION
1" = 10'-0"

Know what's below. Call before you dig.

SITE DEMOLITION GENERAL NOTES

A. Contractor shall provide a saw-cut edge at transition between all existing conditions to remain and existing conditions to be demolished.
B. Contractor shall coordinate all work on site with building managers prior to beginning any work.
C. Contractor shall provide all necessary barriers and blockades as required to protect public from construction activities.

PLAN NORTH

Hezner

The Hezner Corporation
Architectural Services

678 Broadway Street, Suite 100
Libertyville, IL 60048-2325

Ph.: (847)-918-3800
Fax: (847)-549-7633
Email: hezner@hezner.biz

Architect's Seal & Signature

PRELIMINARY NOT FOR CONSTRUCTION

Drawn By: EWW

Checked By: SKH

©Copyright 2025
The Hezner Corporation
Libertyville, Illinois 60048-2325

Date:	Issued For:
7/07/2025	PRELIMINARY REVEIW
	APPLICATION

REVISION SCHEDULE

Rev.	Date:	Issued For:

Project Title

Huntington

New Drive-up ATM Kiosk

40 Skokie Blvd Northbrook, IL 60062

Sheet Title

DEMOLITION SITE PLAN

Architect's Project Number

JS25047

AS101

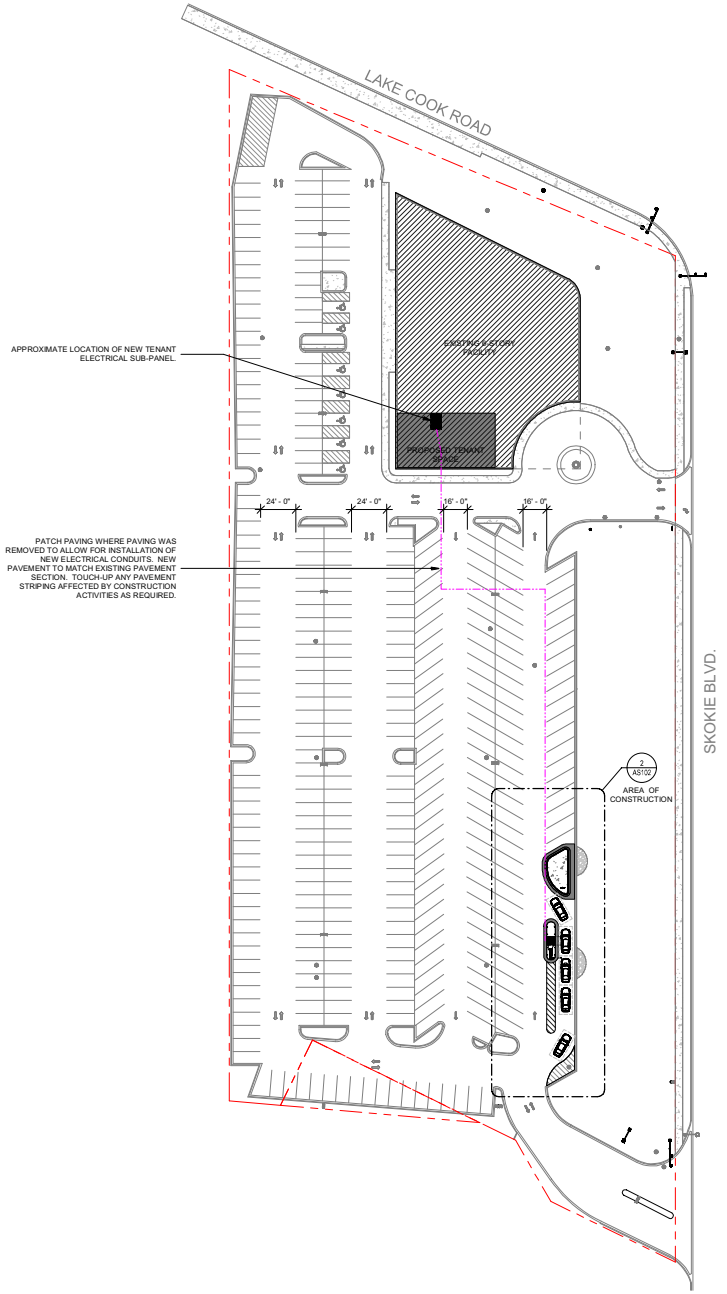

1 NEW SITE PLAN
1" = 40'-0"

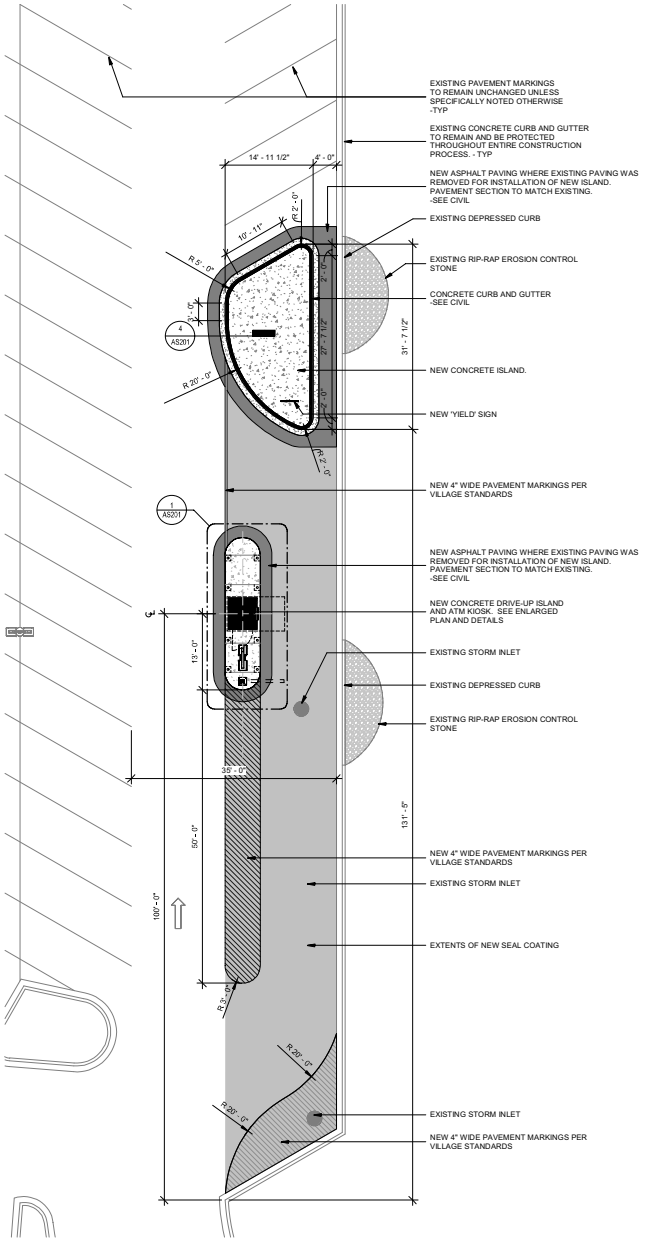

2 ENLARGED SITE PLAN - NEW
1" = 10'-0"

PROJECT LEGEND - SITE

	NEW CONCRETE PAVING/CONCRETE ISLAND
	NEW ASPHALT PAVING - STANDARD DUTY
	NEW CONCRETE CURB
	NEW SEAL COATING AND PAVEMENT STRIPING
	EXISTING RIP-RAP EROSION STONE
E	OVERHEAD POWER LINES
G	GAS LINES
W	WATER LINES
SS	SANITARY SEWER
ST	STORM SEWER
	FIRE HYDRANT
	MANHOLE
	STORM INLET
	VALVE BOX

811 Know what's below. Call before you dig.

NOTES:
1. Removal of existing conditions shall include excavation of existing conditions as required to accommodate new construction.
2. Contractor shall establish a straight, sawcut transition between existing conditions to remain and existing conditions to be removed.

PLAN NORTH

Hezner

The Hezner Corporation
Architectural Services

678 Broadway Street, Suite 100
Libertyville, IL 60048-2325

Ph.: (847)-918-3800
Fax: (847)-549-7633
Email: hezner@hezner.biz

Architect's Seal & Signature

PRELIMINARY NOT FOR CONSTRUCTION

Drawn By: EWW

Checked By: SKH

©Copyright 2025
The Hezner Corporation
Libertyville, Illinois 60048-2325

Date:	Issued For:
7/07/2025	PRELIMINARY REVEIW APPLICATION

REVISION SCHEDULE

Rev.	Date:	Issued For:

Project Title

Huntington

New Drive-up ATM Kiosk

40 Skokie Blvd Northbrook, IL 60062

Sheet Title

NEW SITE PLANS

Architect's Project Number

JS25047

AS102

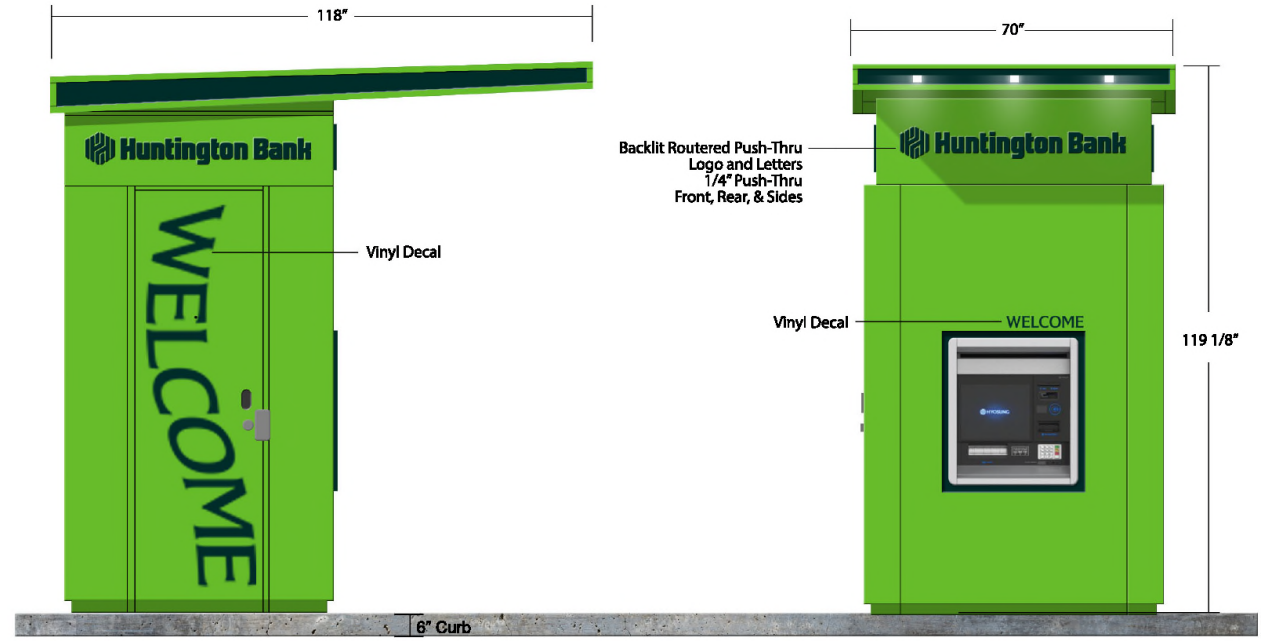

1 ATM KIOSK ELEVATIONS
1" = 1'-0"

Hezner

The Hezner Corporation
Architectural Services

678 Broadway Street, Suite 100
Libertyville, IL 60048-2325

Ph.: (847)-918-3800
Fax: (847)-549-7633
Email: hezner@hezner.biz

Architect's Seal & Signature

PRELIMINARY
NOT FOR
CONSTRUCTION

Drawn By: EWW

Checked By: SKH

©Copyright 2025
The Hezner Corporation
Libertyville, Illinois 60048-2325

Date:	Issued For:
7/07/2025	PRELIMINARY
	REVEIW
	APPLICATION

REVISION SCHEDULE

Rev.	Date:	Issued For:

Project Title

Huntington

New Drive-up ATM Kiosk

40 Skokie Blvd Northbrook, IL 60062

Sheet Title

ATM KIOSK
ELEVATIONS

Architect's Project Number

JS25047

AS202

PRELIMINARY REVIEW
PRE-25-18: 40 SKOKIE BOULEVARD
APPLICATION SUMMARY

Applicant:	Huntington National Bank
Site Location:	40 Skokie Boulevard
Requested Action:	Special Permit for Accessory Drive-Through Facility in O-3 General Office District; and Site Plan Approval.
Proposal:	Allow an accessory drive-through facility within the parking lot for a bank
Existing Zoning & Land Use:	O-3 General Office District; Multi-tenant office building
Surrounding Zoning & Land Use:	North: City of Highland Park; Commercial South: C-5 Boulevard Commercial; Car Dealership East: C-5 Boulevard Commercial; Shopping Center West: C-5 Boulevard Commercial; Railroad Right-of-Way
Comprehensive Plan Designation:	Office – Corporate/Corridor

ZONING MAP

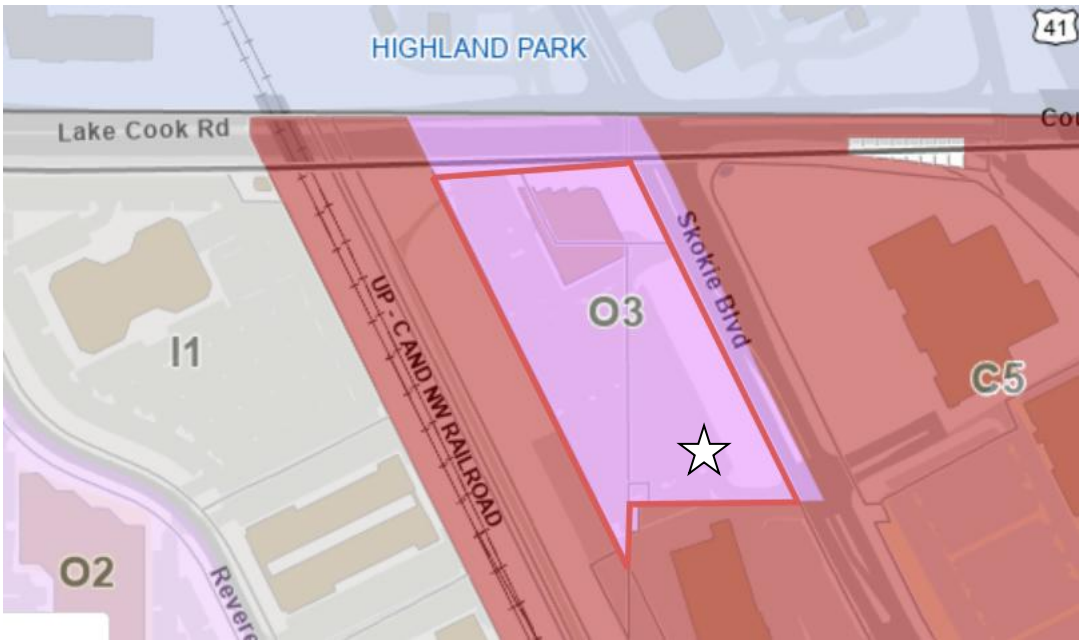

COMPREHENSIVE PLAN MAP



Legend

- Open Space & Outdoor Recreation
- Single Family
- Single Family Large Lot
- Multi-Family up to 6 DUA
- Multi-Family 6-9 DUA
- Multi-Family 9-15 DUA
- Multi-Family over 15 DUA
- Senior or Special Residential
- Government Facility
- Institutional Facility
- Neighborhood Office
- Neighborhood Edge 1
- Neighborhood Edge 2
- Office - Professional
- Office - Corporate/Corridor
- Community Retail
- Major Retail
- Industrial & Commercial Service
- General Industrial, Warehouse & Office
- Major Industrial/Distribution
- Transportation, Comm. & Utilities
- Village Center Mixed Use
- Techny Area Multi-Use
- Major Corridor Multi-Use
- Techny Area

GISConsortium | 40 Skokie



Legend

0 1000 2000 ft

Print Date: 7/29/2025

Notes

Disclaimer: The GIS Consortium and MGP Inc. are not liable for any use, misuse, modification or disclosure of any map provided under applicable law. This map is for general information purposes only. Although the information is believed to be generally accurate, errors may exist and the user should independently confirm for accuracy. The map does not constitute a regulatory determination and is not a base for engineering design. A Registered Land Surveyor should be consulted to determine precise location boundaries on the ground.

GISConsortium | 40 Skokie

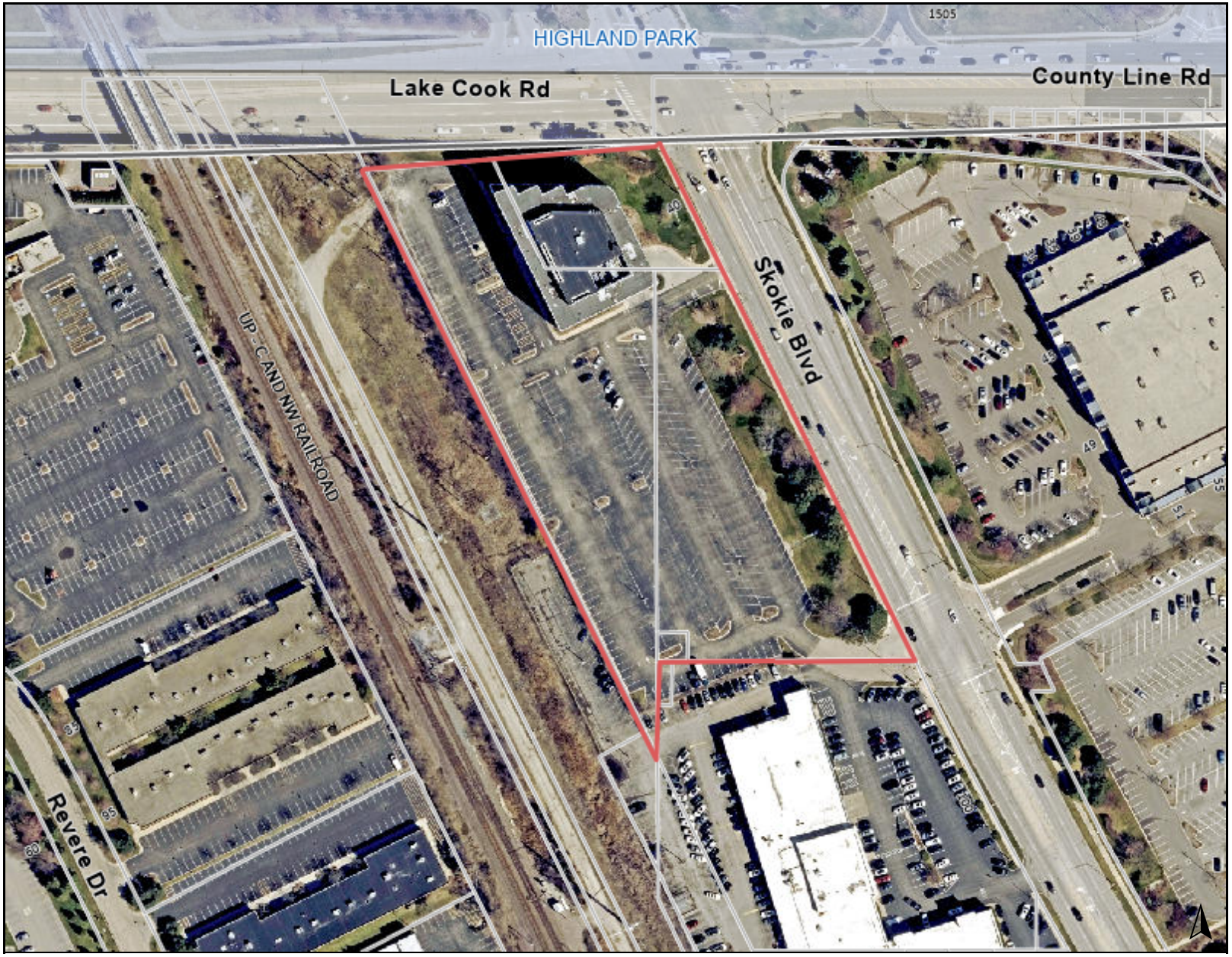

Legend

0 300 600 ft

Print Date: 7/29/2025

Notes

Disclaimer: The GIS Consortium and MGP Inc. are not liable for any use, misuse, modification or disclosure of any map provided under applicable law. This map is for general information purposes only. Although the information is believed to be generally accurate, errors may exist and the user should independently confirm for accuracy. The map does not constitute a regulatory determination and is not a base for engineering design. A Registered Land Surveyor should be consulted to determine precise location boundaries on the ground.

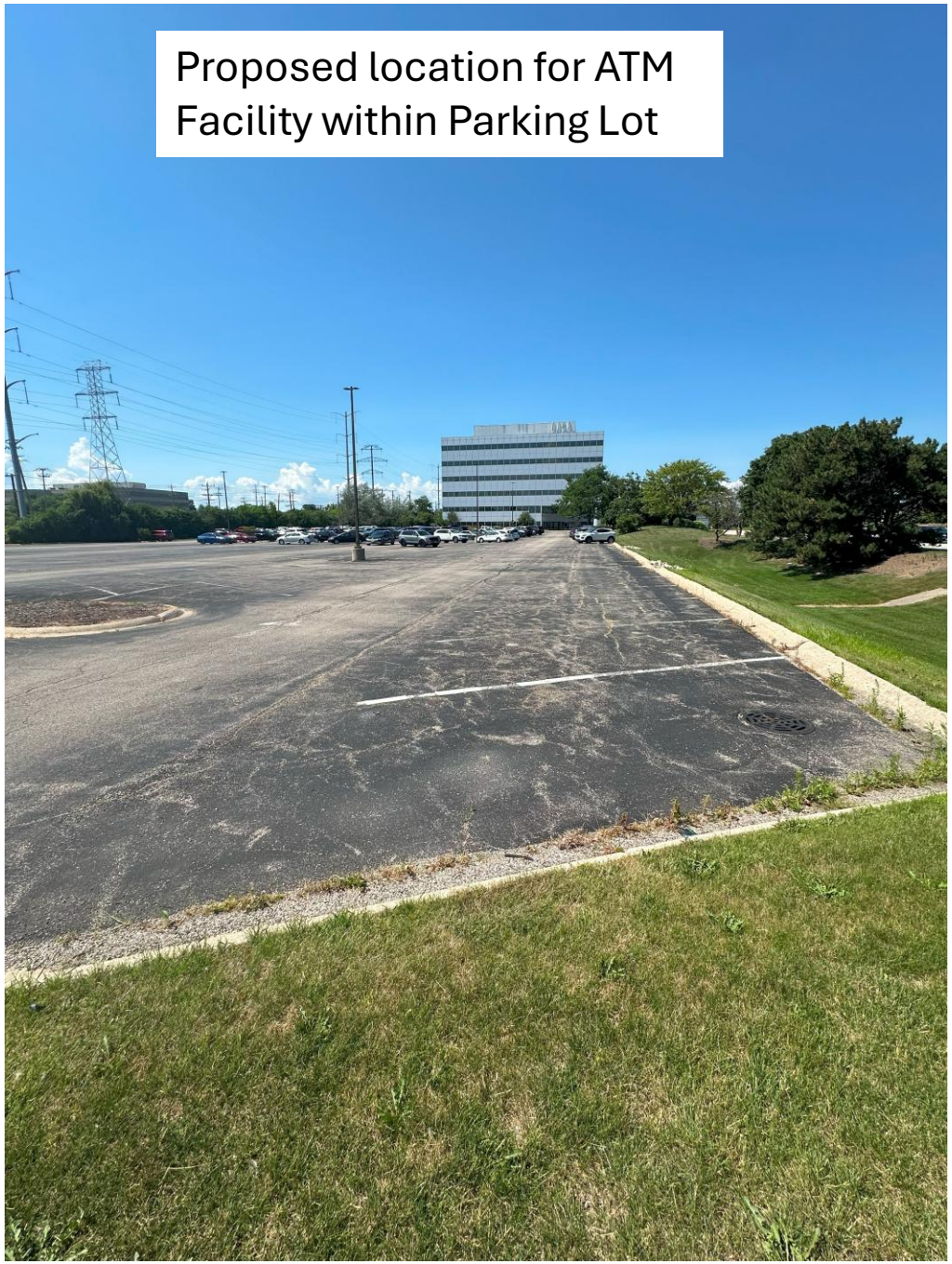

40 Skokie Boulevard



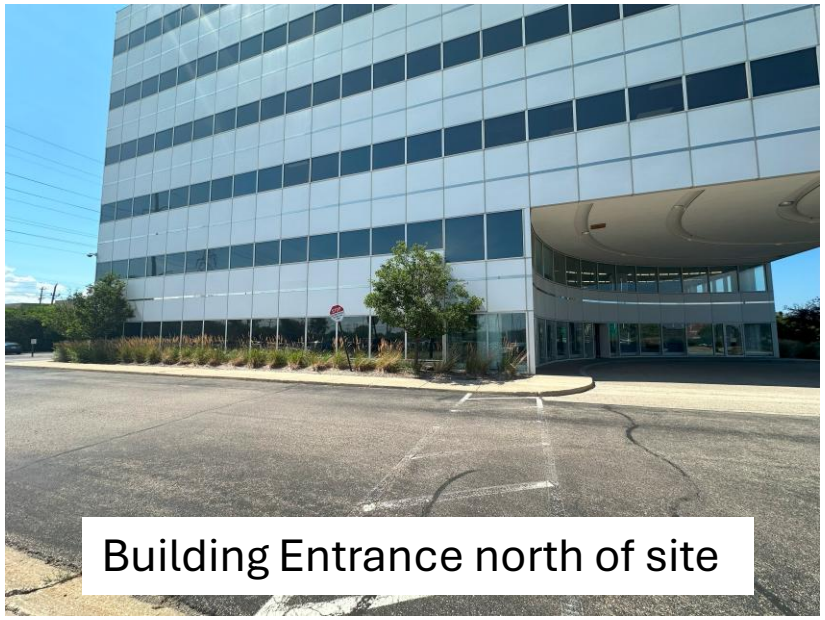

August 12, 2025

40 Skokie Boulevard: Drive-Through Facility Preliminary Review

Northbrook Board of Trustees Meeting

Zoning Relief Process

1

- **Preliminary Review of Sketch Plan by Board of Trustees**
- The Board reviews schematic plans of the proposal.
- The Board of Trustees provides initial comments on a proposal, indicating whether or not they see major issues that need to be addressed by the Applicant before they submit detailed plans.
- The Board of Trustees provides direction for a designated body to conduct the Public Hearing on the application if a formal application is filed.

2

- **Technical Review of Formal Application**
- Applicant files Formal Application
- Review of detailed plans, traffic study, financial impact analysis, etc. by Village Staff (Engineering, Police, Fire, Public Works, Zoning, Sustainability) and Village consultants
- Once technical issues are addressed, a public hearing can be scheduled.

3

- **Public Hearing Held by Northbrook Plan Commission or Northbrook Board of Trustees**
- Notice goes to neighbors by certified mail; a sign is posted on the property; and notice is published in the local newspaper.
- The Applicant presents their proposal, the neighbors are able to speak and ask questions/voice concerns.
- The body conducting the public hearing makes a recommendation on the request to approve or deny

4

- **Board of Trustees Review of Recommendations & Makes Decision (approve or deny)**
- The Board of Trustees reviews the record of the public hearing, including all of the public testimony and makes a final decision – they may also ask for further changes before making a decision.
- Board of Trustees adopts documents formally approving or denying the application.

Existing Conditions

40 Skokie Boulevard



Comprehensive Plan Designation
Office – Corporate /Corridor

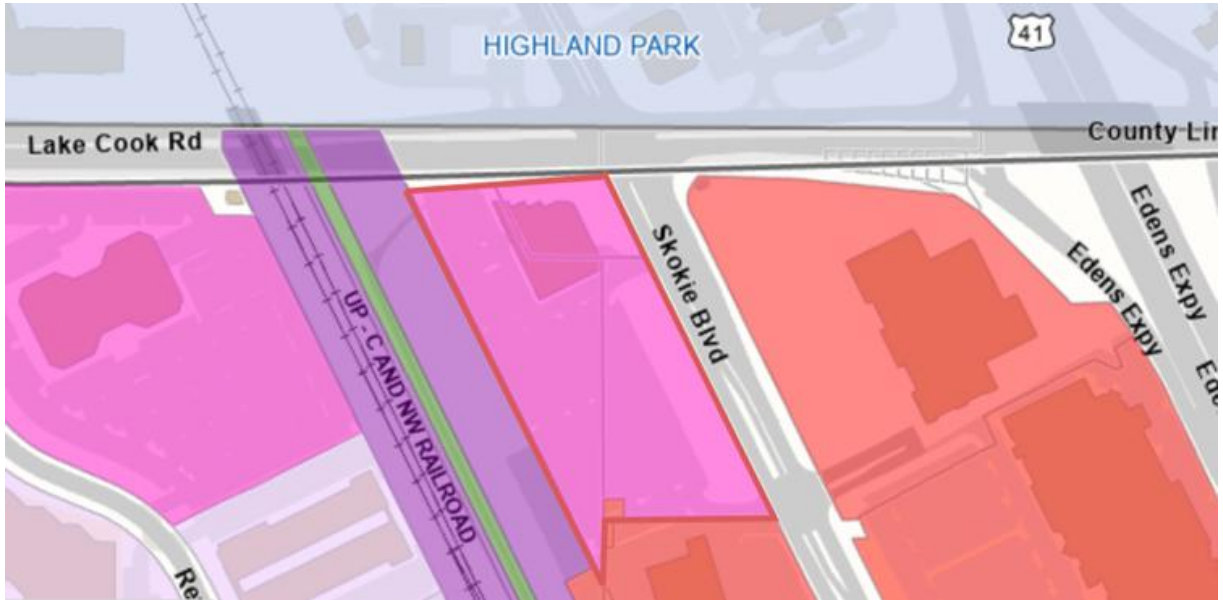

Zoning Map
O-3 General Office District



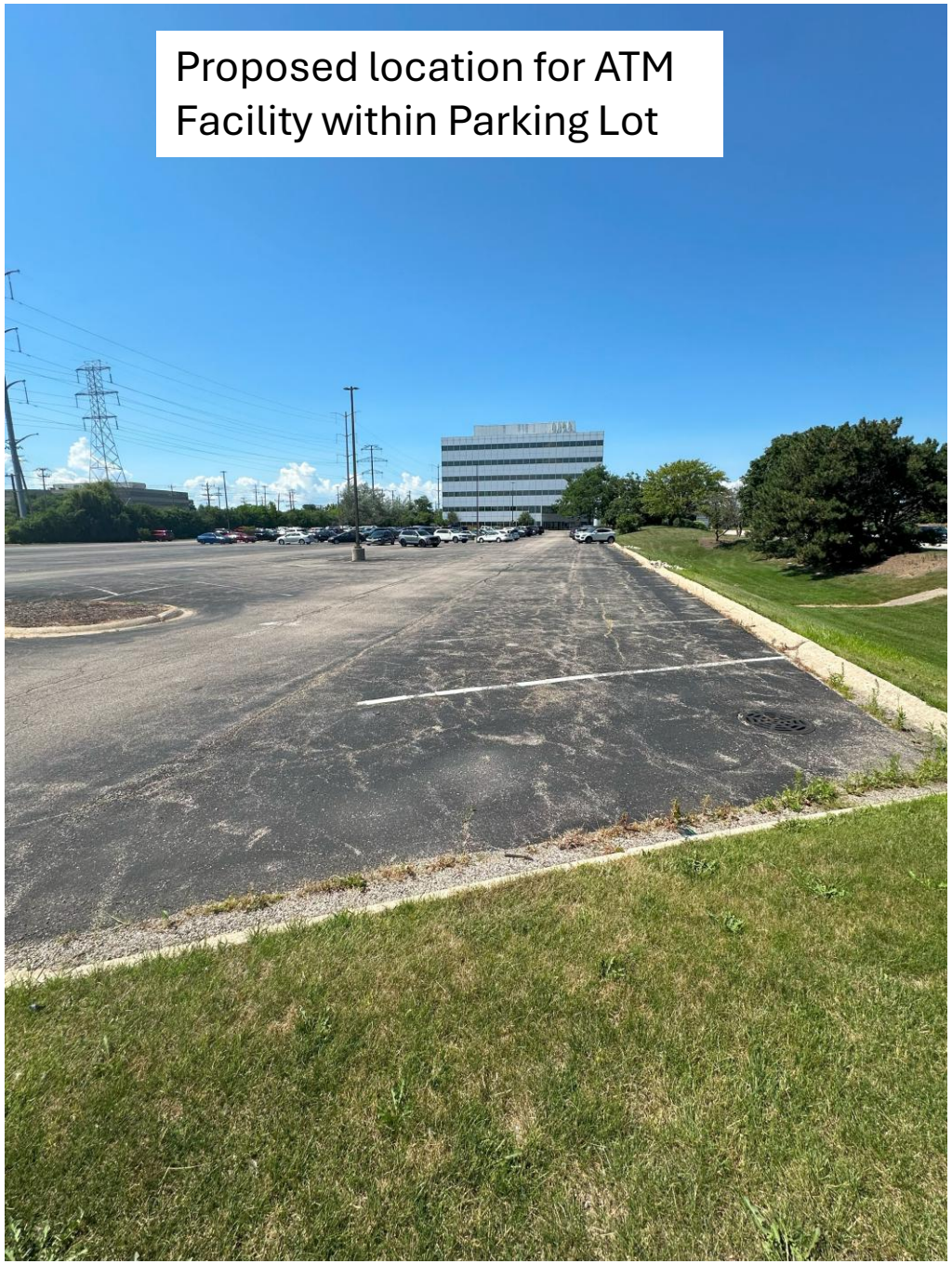
Proposed location for ATM Facility within Parking Lot


Curb-cut towards Skokie Blvd

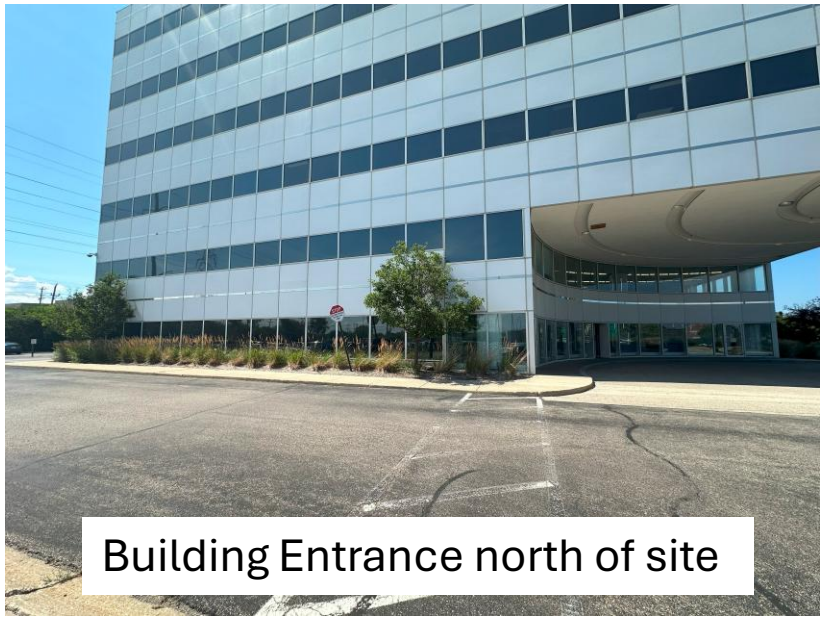
Building Entrance north of site

Proposed Plan

Proposed Plan

- **Huntington National Bank - Applicant**
- Accessory Drive-Through Facility: special permit in O-3 District
- Remove 15 parking spaces in southeast portion of the parking lot and install one ATM kiosk with drive-through facility
- Maintain existing one-way drive-aisle pattern
- Hours of Operation: 24/7
- Parking – in compliance

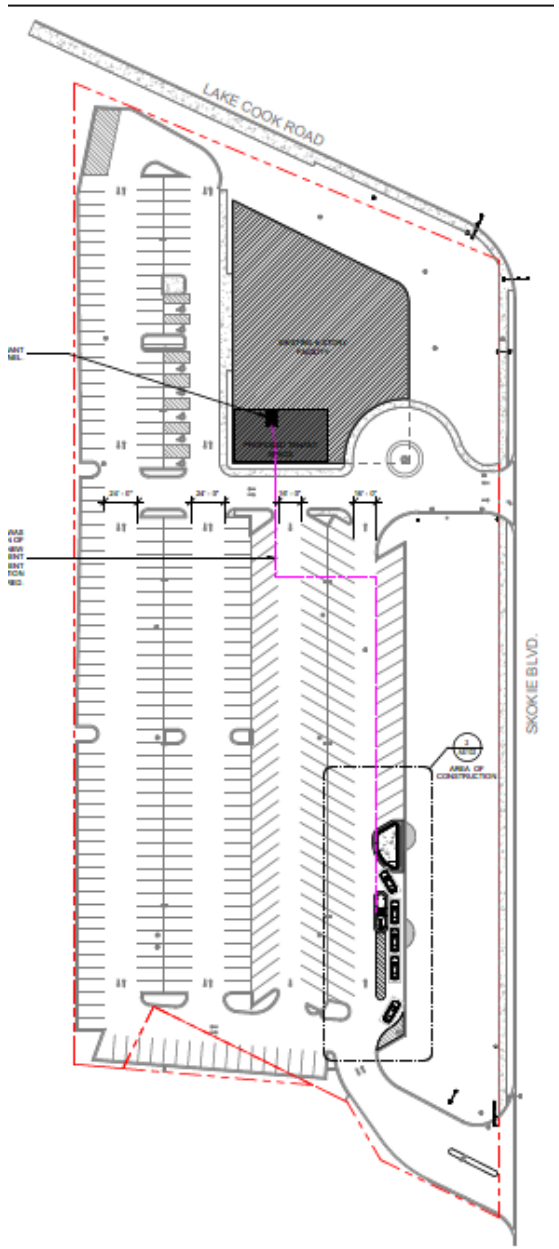

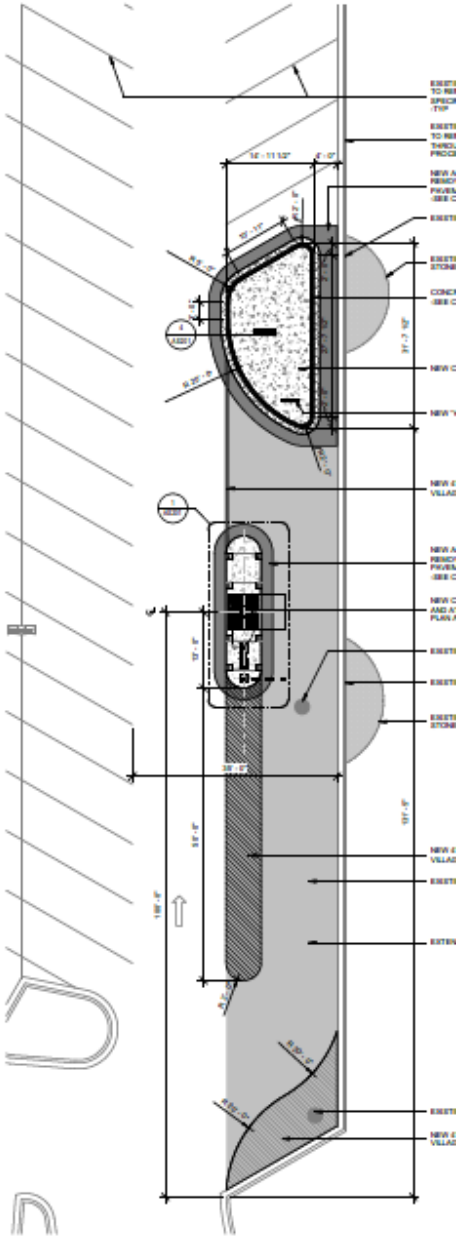





ATM KIOSK ELEVATIONS

Zoning Relief

Zoning Relief

A. Special Permit for Accessory Drive-Through Facility (SIC No. 9980.00) in O-3 General Office District; and

B. Site Plan Approval.

Items to Consider

Items to Consider

a) Is the proposed drive-through facility an appropriate use on the property?

b) Is it acceptable to grant a special permit for an accessory drive-through facility on the property in the O-3 General Business District?
   i. If so, should there be any operational limitations?

c) Is the location and design of the facility within the parking lot appropriate?

d) Does the Board concur with the staff recommendation that the public hearing for the requested relief be conducted by the Plan Commission?

August 12, 2025

40 Skokie Boulevard: Drive-Through Facility Preliminary Review

Northbrook Board of Trustees Meeting

MEMORANDUM

To: Village Manager Cara Pavlicek
From: Director of Development and Planning Services Department Amy McEwan
Date: 2025-08-12
Subject: Preliminary Review of a Request by Crown Castle GT Company LC for a Special Permit for Personal Wireless Services Antenna located on a Tower-Style Structure in Excess of District Height Limitations and a Variation to reduce the required distance between the existing personal wireless service antenna tower and nearby structures from 110' to 69' at 180 Anets Drive

Overview
The applicant is requesting to maintain the continued operation of wireless antenna equipment on a tower style structure in the IB Institutional Building District.

Fiscal Impact
N/A.

Recommendation
The Village Board is asked to comment on the proposal and approve a motion that the public hearing be conducted by the Plan Commission.

Background

The applicant, Crown Castle GT Company LC, has requested the following zoning relief for the operation of personal wireless services facility on an antenna support structure in excess of district height limitations in the I-B Institutional Building District, at the property commonly known as 180 Anets Drive which is owned by the Northbrook Park District:

A. Special permit to allow a Personal Wireless Services Antenna located on a Tower-Style Structure in Excess of District Height Limitations in the I-B Institutional Building District; and
B. Variation to reduce the required distancing between the existing personal wireless service antenna tower and nearby structures from 110’ to 69’.

In 2019, a special permit was granted through Ordinance No. 2019-51 for the same relief currently being requested, which was renewed by Ordinance No. 2021-35 that ultimately expired on January 31, 2023. At the time of the expiration the Park District had indicated it would no longer be leasing land for cell tower use. In the last several months, the Park District of Northbrook determined that it would continue to lease land for the use of the cell tower, so

the applicant is now requesting a new special permit given the expiration of the previous special permit.

In reviewing this request we suggest the Board consider the following policy questions:

a. Is it appropriate to allow the continued use of a cell tower on the Subject Property as it exists today?
b. If so, should there be any operational limitations placed on the use?

The property at 180 Anets Drive is described as being:

- located west of Anets Drive, north of Techny Lane, and east of the railroad tracks;
- approximately 271,378 square feet (6.23 acres) in size;
- zoned IB Institutional Building District;
- designated as appropriate for Government Facility uses in the Comprehensive Plan's Future Land Use;
- surrounded by properties with land uses as depicted on the attached Application Summary;
- not located within the 100-year flood plain; and
- not located in proximity to any areas identified in the Master Stormwater Management Plan.
- The Village's Bicycle and Pedestrian Plan designates Anets Drive in front of the Subject Property as appropriate for a signed and marked roadway, while Techny Road is appropriate for conventional bike lanes.

The proposed plan notes:

- The Applicant is requesting to maintain the continued the operation of wireless antenna equipment on a tower style structure in the I-B Institutional Building District. There are no significant changes being proposed, but the applicant does intend to update the equipment panels on the tower as technology continues to evolve. This is a standard process for cell tower equipment.
- Northbrook Park District has confirmed that the lease for the Applicant will be terminated January 12, 2048 and their letter is attached.

The Applicant and staff will be present at the August 12, 2025 Board of Trustees meeting to answer any questions.

Supplemental - Applicant Submittal - 180 Anets
Supplemental - 180 Anets - Application Summary, Aerials, Site Photos - 180 Anets
Supplemental - Ordinance 2019-51 - 180 Anets Drive
Supplemental - Ordinance 2021-35 - Anets Drive
Supplemental - Presentation - 180 Anets

FORMAL APPLICATION ±ZONING & SUBDIVISION RELIEF**

Prior to submitting this formal application, the matter must first be reviewed as a preliminary application by the Village Board of Trustees . If the Board has not yet reviewed your preliminary application, please contact the Department of Development & Planning Services to learn what is required. The following materials are the minimum UHTXLUHG IRU WKH SURFHVVLQJ RI D IRUPDO DSSOLFDWLRQ E\ WKH 9LOODJ
A public hearing or public meeting for an application will not be scheduled until all required materials have been submitted and revised as necessary to meet Code requirements, as determined by Village staff. If you have questions regarding the completion of this application please contact the Development & Planning Services Department at 847-664-4050.
**Applications for zoning relief from the Zoning Board of Appeals must use a different application form.

The initial submittal MUST contain:

- 1 electronic version (PDF) of ALL application materials (refer to application section regarding instructions).

Applicant Information

Legal Name &52:1 &$67/(*7 &203$1< /&

Company &52:1 &$67/(*7 &203$1< /&

Address .$7<)5((:$<

City, State, Zip +286721 7;

Phone No.

Email &RPSOLDQFH 5HQZDO#FURZQFDVWOH FRP

Primary Contact Person

Name -,0 /((352*5$0 0*5

Company &52:1 &$67/(*7 &203$1< /&

Address .$7<)5((:$<

City, State, Zip +286721 7;

Phone No.

Email &RPSOLDQFH 5HQZDO#FURZ

Consultants (as applicable)

Attorney

Name

Company

Address

City, State, Zip

Phone No.

Email

Architect/Planner

Name

Company

Address

City, State, Zip

Phone No.

Email

Civil Engineer

Name

Company

Address

City, State, Zip

Phone No.

Email

Other

Name 3$8/ 3(&.(16 $*(17

Company &(// 6,7(6(59,&(6 //&

Address .$7<)5((:$<

City, State, Zip +286721 7;

Phone No.

Email SSHFNHQV#FHOOVLWHOO

Docusign Envelope ID: 73F002A8-3BF6-43A3-8EB8-CECE7883948A

Property Information (if more than one parcel is involved in the request please include the information for all parcels)

Site Location/Address: _____

Property Index Numbers: _____

_____

Size of Property: _____ (square feet/acres)

Size of Building Space, if applicable: _____ (square feet)

Comprehensive Plan Land Use Designation[1]: _____

Current Zoning: _____

Current Use of the Property: _____

Is any portion of the property within the 100-year floodplain?[1] Yes: _____ No: _____

Requested Action (s) (check all that are applicable)

‰ Comprehensive Plan Amendment

‰ Annexation (separate form required)

‰ Rezoning from _____ to _____

‰ Special Permit for _____

_____

_____

‰ Renewal of Special Permit Ord. No. _____

‰ Amendment to Existing Special Permit
Ord. No. _____

‰ Site Plan Approval

‰ Zoning Code Text Amendment

‰ Zoning Variation (in conjunction with other relief)
for _____

_____

‰ Planned Development - Concept Plan

‰ Planned Development - Final Plan

‰ Subdivision - Tentative Plat

‰ Subdivision - Final Plat

‰ Subdivision - Variations/Waiver for _____

_____

‰ Exception for _____

‰ Other _____

‰ Plat of Survey & Parcel Legal Description(s)

Attach the most recent plat of survey of the Subject Property, certified by a registered land surveyor, showing existing lot lines and dimensions, lot area, all easements, all public and private rights-of-way, and all streets across and adjacent to the subject property.

‰ Conformity with Comprehensive Plan

Include a written statement explaining the conformity, or lack of conformity, of the approval being requested to the Village ¶ Official Comprehensive Plan and Official Map. Where the approval being requested does not conform to the Official Comprehensive Plan or Official Map, provide reasons justifying the requested approval.

‰ Surrounding Property Owners Addresses

Please attach the names and mailing addresses of all property owners of record (not tenants) within 250 feet of the property, excluding public rights-of-way, based on current County tax records. See page10 of this document for instructions on how to obtain the addresses.

[1] As found on the Village website www.northbrook.il.us/Government/Departments/Planning/GIS/index.php

Docusign Envelope ID: 73F002A8-3BF6-43A3-8EB8-CECE7883948A

Site Ownership and Control

Current Property Owner Information	Proposed Property Owner Information
Legal Name:	Legal Name:
Primary Contact:	Primary Contact:
Address	Address
City, State, Zip	City, State, Zip
Phone No.	Phone No.
Email	Email

Attach a copy of a title policy or deed showing current ownership of the property. If property is held in a trust, also include a certified copy of the trust agreement or a simple affidavit (under oath before a notary) as to who are the beneficiaries of the trust. (Check which document(s) are attached):

- ‰ Deed
- ‰ Title Policy or Title Commitment (Required for Subdivision Applications & Plats of Consolidation Applications)
- ‰ Certified Copy of Trust Agreement OR a simple Affidavit Identifying Trust Beneficiaries

‰ Complete Attachment A , listing all individuals/entities that have a beneficial interest in the legal entity that currently owns the property

‰ Complete Attachment B, listing all individuals/entities that have a beneficial interest in the legal entity that is proposed to own the property upon receiving necessary approvals .

Applicants Involvement with the Property

If the Applicant does not own the property, please also S U R Y L G H G R F X P H Q W D W L R Q V K R Z L Q J W K H D property (Check which document is attached. The dollar amounts in documents may be blacked-out):

‰	Owner (see the previous box)	‰	Lease
‰	Real Estate Contract	‰	Other

‰ Complete Attachment C, listing all individuals/entities that have a beneficial interest in the legal entity that is the Applicant.

Additional Required Attachment(s)

Submit all relevant attachments specified in the below worksheet(s) that correspond with your application request(s) selected on page two of this application; the worksheets can be found on the Village of Northbrook website www.northbrook.il.us, as well as in the Community Planning Department in the Village Hall. (Check all that are applicable)

- ‰ Comprehensive Plan Amendment Worksheet
- ‰ Annexation Worksheet
- ‰ Rezoning Worksheet
- ‰ Special Permit Worksheet
- ‰ Site Plan Approval Worksheet
- ‰ Zoning Code Text Amendment Worksheet
- ‰ Zoning Variation Worksheet
- ‰ Planned Development Worksheet- Concept Plan
- ‰ Planned Development Worksheet- Final Plan
- ‰ Subdivision Worksheet ±Tentative Plat
- ‰ Subdivision Worksheet - Final Plat
- ‰ Subdivision Worksheet - Variations/Waiver
- ‰ Zoning Exception Worksheet
- ‰ Condominium Conversion Worksheet
- ‰ Plat of Consolidation Worksheet

Docusign Envelope ID: 73F002A8-3BF6-43A3-8EB8-CECE7883948A

Filing Fees

All applications require payment of a non-refundable fee, as well as additional funds that are held in escrow to off-set anticipated recoverable expenses. Please attach a check with your application and indicate below the amount of the fee submitted. A copy of the fee schedule is attached to the application form.

$_____ Amount of Non-Refundable Fee

$_____ Amount of Escrow

$_____ Total Application Fee (Non-Refundable Fee plus Escrow)

The escrow covers such items as Village attorney time (currently billing at approx. $400.00 per hour), public notice expenses, public meetings ($50.00 per mtg), & staff review time. If these expenses exceed the initial escrow deposit, the applicant is responsible for additional payment to the Village prior to completing approval process. If the expenses are less than the escrow deposit, the applicant will be issued a refund.

Northbrook Ethics Code (potential conflicts of interest)

On a separate sheet of paper list the name, address, nature, and extent of any current or potential interest that any Village officer or employee may have in, or with respect to the owner, the applicant, or the property. If none, check here: ____
(For more information, see Sections 2-71 through 2-85 of the Northbrook Municipal Code located on our website, or pick-up a copy of the Northbrook Ethics Code booklet in the Development & Planning Services Department at the Village Hall)

Repeat Application

Has any other application for this property been submitted to the Village and denied within the last two years?
____ yes ____ no (check one)
If yes, attach a statement of the grounds justifying reconsideration (See Zoning Code Sec. 11-302).

Applicant/Owner Acknowledgments

By execution of this application in the space provided below, the Applicant and Owner(s) do hereby certify, acknowledge, agree and affirm to the Village of Northbrook that:

1. The Village and its representatives have the right, and are hereby granted permission and license, to enter upon the property, and into any structures located thereon, for purposes of conducting any inspections that may be necessary in connection with this application.

2. I (We) have carefully read this application, the Northbrook Zoning Code and Northbrook Subdivision & Development Code and fully understand the terms and provisions of each.

3. I (We) waive any rights to exemption from disclosure under the Illinois Freedom of Information Act of any and all documents and information submitted in connection with this application.

4. I (We), in accordance with the requirements of the Annual Fee Ordinance, the Northbrook Zoning Code and the Northbrook Subdivision & Development Code, agree to pay all applicable filing fees and be responsible for the payment of all reimbursable expenses associated with the processing of this application.

Applicants may attach additional materials or exhibits to this application if necessary or helpful in explaining the relief requested.

Signature of Applicant : Paul S. Peckens Date 05.19.2025
Print Name & Title: PA S. P S. A
Signatures of Property Owner(s) : Signed by: Chris Leiner C1C03E5800C2491... Date 6/25/2025 | 11:39
Print Name & Title: Chris Leiner Executive Director Property Address : 180 N Anets Drive Northbroo
**If more than one applicant or property owner, please copy this page and have additional applicants/property owners sign form.

Note: Village review and approval of rezoning, special permit, and subdivision applications may be dependent upon the Applic ant first receiving necessary approvals from State and County regulatory agencies such as, but not limited to, the Illinois Department of Transportation, Illinois Environmental Protection Agency, the Metropolitan Water Reclamation District of Greater Chicago, & t he Cook County Highway Department.

ATTACHMENT A: Current Property Owner ±Beneficial Interest

Please check which of the following GHVFULEHV WKH FXUUHQW SURSHUW\ RZQHU¶V and complete this sheet as instructed for each type of beneficial interest:

‰Corporation	If current property owner is a corporation, please list the name and addresses of all officers and directors of the corporation and all shareholders who own individually or beneficially 5% or more of the stock of the corporation. In addition, this application must be accompanied by a resolution of the corporation authorizing the execution and submittal of this application.
‰Partnership or LLC	If current property owner is a partnership or an LLC, please list all partners, general and/or limited, with an individual or beneficial interest of 5% or greater.
‰Trust	If current property owner is a trust, please provide the trust number _____ and name and address of the Trustee _____ _____, as well as list below the names and address of all beneficiaries of the Trust, together with their respective interests in the trust. The application shall be further verified by the current property owner in his capacity as trustee or by the beneficiary as a beneficial owner of an interest in the Trust and the application shall be signed individually by as many beneficiaries as are necessary to constitute greater than 50% ownership of the beneficial interest of the Trust

Name: _____

_____

Address: _____

_____

Ownership or Trust Interest: _____ %

Name: _____

_____

Address: _____

_____

Ownership or Trust Interest: _____ %

Name: _____

_____

Address: _____

_____

Ownership or Trust Interest: _____ %

Name: _____

_____

Address: _____

_____

Ownership or Trust Interest: _____ %

Name: _____

_____

Address: _____

_____

Ownership or Trust Interest: _____ %

Name: _____

_____

Address: _____

_____

Ownership or Trust Interest: _____ %

ATTACHMENT B - Proposed Property Owner ±Beneficial Interest

Please check which of the following GHVFULEHV WKH SURSRVHG SURSHUW\ RZQHU¶V and complete this sheet as instructed for each type of beneficial interest:

‰Corporation	If the proposed property owner is a corporation, please list the name and addresses of all officers and directors of the corporation and all shareholders who own individually or beneficially 5% or more of the stock of the corporation. In addition, this application must be accompanied by a resolution of the corporation authorizing the execution and submittal of this application.
‰Partnership or LLC	If proposed property owner is a partnership or an LLC, please list all partners, general and/or limited, with an individual or beneficial interest of 5% or greater.
‰Trust	If proposed property owner is a trust, please provide the trust number _____ and name and address of the Trustee _____ _____, as well as list below the names and address of all beneficiaries of the Trust, together with their respective interests in the trust. The application shall be further verified by the proposed property owner in his capacity as trustee or by the beneficiary as a beneficial owner of an interest in the Trust and the application shall be signed individually by as many beneficiaries as are necessary to constitute greater than 50% ownership of the beneficial interest of the Trust

Name: _____
_____
Address: _____
_____
Ownership or Trust Interest: _____ %

Name: _____
_____
Address: _____
_____
Ownership or Trust Interest: _____ %

Name: _____
_____
Address: _____
_____
Ownership or Trust Interest: _____ %

Name: _____
_____
Address: _____
_____
Ownership or Trust Interest: _____ %

Name: _____
_____
Address: _____
_____
Ownership or Trust Interest: _____ %

Name: _____
_____
Address: _____
_____
Ownership or Trust Interest: _____ %

Docusign Envelope ID: 73F002A8-3BF6-43A3-8EB8-CECE7883948A

ATTACHMENT C - Applicant ±Beneficial Interest

Please check which of the following describes the beneficial interest in the legal entity that is the applicant and complete this sheet as instructed for each type of beneficial interest:

‰Corporation	If applicant is a corporation, please list the name and addresses of all officers and directors of the corporation and all shareholders who own individually or beneficially 5% or more of the stock of the corporation. In addition, this application must be accompanied by a resolution of the corporation authorizing the execution and submittal of this application.
‰Partnership or LLC	If applicant is a partnership or an LLC, please list all partners, general and/or limited, with an individual or beneficial interest of 5% or greater.
‰Trust	If the applicant is a trust, please provide the trust number _____ and name and address of the Trustee _____ _____, as well as list below the names and address of all beneficiaries of the Trust, together with their respective interests in the trust. The application shall be further verified by the applicant in his capacity as trustee or by the beneficiary as a beneficial owner of an interest in the Trust and the application shall be signed individually by as many beneficiaries as are necessary to constitute greater than 50% ownership of the beneficial interest of the Trust

Name: _____

_____

Address: _____

_____

Ownership or Trust Interest: _____ %

Name: _____

_____

Address: _____

_____

Ownership or Trust Interest: _____ %

Name: _____

_____

Address: _____

_____

Ownership or Trust Interest: _____ %

Name: _____

_____

Address: _____

_____

Ownership or Trust Interest: _____ %

Name: _____

_____

Address: _____

_____

Ownership or Trust Interest: _____ %

Name: _____

_____

Address: _____

_____

Ownership or Trust Interest: _____ %

8020 Katy Freeway

Houston TX, 77024

Phone: (949) 930-4360
www.crowncastle.com

July 18, 2025

Village of Northbrook
Michaela Kohlstedt, Deputy Director
Development & Planning Services
1225 Cedar Lane
Northbrook, IL 60062

Business Unit: 875515
Site Name: 180 ANETS

Narrative:

The property is commonly known as 180 NORTH ANETS DR., NORTHBROOK, IL 60062, and is further described as Tax ID Parcel # 04-15-101-029. Attached is **Exhibit A**, Legal Description. The Subject Property is zoned in the 18 Institutional Building District and is owned by the Northbrook Park District ("Owner"). Pursuant to Section 9-201M of the Village of Northbrook Zoning Code, "Where the provider of personal wireless services is not the owner of the land on which such antenna or structure is located, the term of the special permit is limited to the term of the lease...". The next expiration of our lease with the Owner is January 12, 2048. Therefore, Crown Castle GT Company, LLC, requests renewal of the Special Permit Ordinance 2021-35 until the lease expires or is terminated.

An approved building permit authorizes T-Mobile to upgrade its current equipment. Upon special permit renewal approval, T-Mobile will proceed with the installation in accordance with the submitted drawings and structural analysis. This site operates continuously and delivers a vital service to the community, supporting residents, businesses, first responders, and an interconnected network of nearby cell sites. Additionally, it ensures reliable coverage for 911 calls from wireless devices in the vicinity of Techny Prairie Park and Fields.

The cell tower conforms well with the criteria set by the Board of Trustees. The neighborhood is mainly commercial and industrial, making the tower a compatible addition that will not disrupt the landscape. The property suits the requested special permit, as it is in an area that benefits from improved telecommunications infrastructure. The tower's design and placement minimize visual impact on the property and neighboring areas. The tower aligns with adjacent uses and zoning, fitting within the surrounding commercial and industrial zones. It will not harm or negatively affect neighboring properties. The impact on traffic and parking will be minimal since the tower is not expected to generate significant demand.

The community needs enhanced wireless connectivity infrastructure, and the tower's economic benefits are expected to be positive. The advantages for public health, safety, and welfare, including better communication, outweigh any hardships the landowner might face if the application is denied. The proposal complies with the Uniform Development Ordinance and falls within permissible uses.

EXHIBIT A

Legal Description

EXISTING LEASE AREA DESCRIPTION PER SURVEY PREPARED BY STONELAKE SURVEY COMPANY, LTD DATED 9/10/97
THAT PART OF THE NORTHWEST QUARTER OF SECTION 15, TOWNSHIP 42 NORTH, RANGE 12 EAST OF THE THIRD PRINCIPAL MERIDIAN, DESCRIBED AS FOLLOWS: COMMENCING AT A POINT ON THE NORTH LINE OF THE SOUTH 525.40 FEET OF LOT 19 IN ASSESSOR'S DIVISION OF SAID SECTION 15, AT THE EASTERLY RIGHT OF WAY LINE OF THE CHICAGO, MILWAUKEE, ST. PAUL AND PACIFIC RAILROAD; THENCE NORTH 90 DEGREES EAST ALONG SAID NORTH LINE, 25.54 FEET; THENCE NORTH 00 DEGREES 00 MINUTES EAST, 47.96 FEET TO THE POINT OF BEGINNING; THENCE NORTH 01 DEGREES 25 MINUTES 05 SECONDS WEST, 20.00 FEET; THENCE SOUTH 88 DEGREES 34 MINUTES 55 SECONDS WEST, 30.00 FEET; THENCE SOUTH 01 DEGREES 25 MINUTES 05 SECONDS EAST, 20.00 FEET; THENCE NORTH 88 DEGREES 34 MINUTES 55 SECONDS EAST, 30.00 FEET TO THE POINT OF BEGINNING , ALL IN COOK COUNTY, ILLINOIS AND CONTAINING 600 SQUARE FEET.

EXISTING 12' ACCESS EASEMENT DESCRIPTION PER SURVEY PREPARED BY STONELAKE SURVEY COMPANY, LTD DATED 9/10/97
THAT PART OF THE NORTHWEST QUARTER OF SECTION 15, TOWNSHIP 42 NORTH, RANGE 12 EAST OF THE THIRD PRINCIPAL MERIDIAN, DESCRIBED AS FOLLOWS: COMMENCING AT A POINT ON THE NORTH LINE OF THE SOUTH 525.40 FEET OF LOT 19 IN ASSESSOR'S DIVISION OF SAID SECTION 15, AT THE EASTERLY RIGHT OF WAY LINE OF THE CHICAGO, MILWAUKEE, ST. PAUL AND PACIFIC RAILROAD; THENCE NORTH 90 DEGREES EAST ALONG SAID NORTH LINE, 372.00 FEET TO THE POINT OF BEGINNING; THENCE NORTH 00 DEGREES 00 MINUTES WEST, 470.00 FEET TO A POINT OF CURVE; THENCE NORTHWESTERLY ALONG A CURVE CONVEX NORTHEASTERLY AND HAVING A RADIUS OF 114.00 FEET, A DISTANCE OF 179.07 FEET; THENCE NORTH 90 DEGREES WEST, 350.0 FEET TO A POINT OF CURVE; THENCE SOUTHWESTERLY ALONG A CURVE CONVEX NORTHWESTERLY AND HAVING A RADIUS OF 52.00 FEET, A DISTANCE OF 97.52 FEET; THENCE SOUTH 17 DEGREES 27 MINUTES EAST, 322.53 FEET; THENCE SOUTH 15 DEGREES 45 MINUTES 40 SECONDS EAST, 147.04 FEET; THENCE SOUTH 01 DEGREES 25 MINUTES 05 SECONDS EAST, 20.00 FEET; THENCE NORTH 90 DEGREES WEST, 7.32 FEET; THENCE NORTH 15 DEGREES 45 MINUTES 40 SECONDS WEST, 154.25 FEET; THENCE NORTH 17 DEGREES 27 MINUTES WEST, 322.37 FEET TO A POINT OF CURVE; THENCE NORTHEASTERLY ALONG A CURVE CONVEX NORTHWESTERLY AND HAVING A RADIUS OF 64.00 FEET, A DISTANCE OF 120.02 FEET; THENCE SOUTH 90 DEGREES EAST, 350.00 FEET TO A POINT OF CURVE; THENCE SOUTHEASTERLY ALONG A CURVE CONVEX NORTHEASTERLY AND HAVING A RADIUS OF 126.00 FEET, A DISTANCE OF 197.92 FEET; THENCE SOUTH 00 DEGREES 00 MINUTES EAST, 470.00 FEET; THENCE SOUTH 90 DEGREES WEST, 12.00 FEET TO THE POINT OF BEGINNING, ALL IN COOK COUNTY, ILLINOIS AND CONTAINING 19,140 SQUARE FEET.

EXISTING 8' UTILITY EASEMENT DESCRIPTION PER SURVEY PREPARED BY STONELAKE SURVEY COMPANY, LTD DATED 9/10/97
THAT PART OF THE NORTHWEST QUARTER OF SECTION 15, TOWNSHIP 42 NORTH, RANGE 12 EAST OF THE THIRD PRINCIPAL MERIDIAN, DESCRIBED AS FOLLOWS: COMMENCING AT A POINT ON THE NORTH LINE OF THE SOUTH 525.40 FEET OF LOT 19 IN ASSESSOR'S DIVISION OF SAID SECTION 15, AT THE EASTERLY RIGHT OF WAY LINE OF THE CHICAGO, MILWAUKEE, ST. PAUL AND PACIFIC RAILROAD; THENCE NORTH 90 DEGREES EAST ALONG SAID NORTH LINE, 61.00 FEET; THENCE NORTH 00 DEGREES 00 MINUTES EAST, 4.00 FEET TO THE POINT OF BEGINNING, BEING THE CENTERLINE OF A 8.00 FOOT EASEMENT, 4.00 FEET EITHER SIDE OF THE FOLLOWING DESCRIBED LINE; THENCE SOUTH 90 DEGREES WEST, 22.00 FEET; THENCE NORTH 00 DEGREES 00 MINUTES EAST, 54.00 FEET; THENCE SOUTH 90 DEGREES WEST, 13.71 FEET TO THE END OF EASEMENT, ALL IN COOK COUNTY, ILLINOIS AND CONTAINING 716 SQUARE FEET.

PIN: 04-15-101-029

DigiSigner Document ID: d0dff10a-7aee-48fd-85bf-5ed24f60df6e

T-Mobile

T-MOBILE SITE NUMBER: CH80545A
T-MOBILE SITE NAME: CH80545A
T-MOBILE PROJECT: SPRINT KEEP

BUSINESS UNIT #: 875515
SITE ADDRESS: 180 NORTH ANETS DRIVE NORTHBROOK, IL 60062
COUNTY: COOK
SITE TYPE: MONOPOLE
TOWER HEIGHT: 100'-0"

SITE INFORMATION

CROWN CASTLE USA INC.	
SITE NAME:	180 ANETS
BU NUMBER:	875515
TOWER OWNER:	CROWN CASTLE 2000 CORPORATE DRIVE CANONSBURG, PA 15317
CARRIER/APPLICANT:	T-MOBILE 8550 W. BRYN MAWR AVE, SUITE 100 CHICAGO, IL 60631
SITE ADDRESS:	180 NORTH ANETS DRIVE NORTHBROOK, IL 60062
COUNTY:	COOK
LATITUDE:	42° 7' 5.01"
LONGITUDE:	-87° 49' 25.77"
LAT/LONG TYPE:	NAD83
GROUND ELEVATION:	646'-0"
AREA OF CONSTRUCTION:	EXISTING
CURRENT ZONING:	IB
MAP/PARCEL #:	04-15-101-029-0000
OCCUPANCY CLASSIFICATION:	U
TYPE OF CONSTRUCTION:	IIB
A.D.A. COMPLIANCE:	FACILITY IS UNMANNED AND NOT FOR HUMAN HABITATION
PROPERTY OWNER:	NORTHBROOK PARK DISTRICT 545 ACADEMY DRIVE NORTHBROOK, IL 60062
JURISDICTION:	VILLAGE OF NORTHBROOK
ELECTRIC PROVIDER:	COM ED (800) 334-7661
TELCO PROVIDER:	AMERITECH (800) 898-0123

PROJECT TEAM

A&E FIRM:	POWER OF DESIGN 11490 BLUEGRASS PARKWAY LOUISVILLE, KY 40299 (502) 437-5252
CROWN CASTLE USA INC. DISTRICT CONTACTS:	3025 HIGHLAND PKWY, SUITE 510, DOWNERS GROVE, IL, 60515 PAUL SLIFER - PROJECT MANAGER PAUL.SLIFER@CROWNCASTLE.COM PATRICK GABREL - CONSTRUCTION MANAGER PATRICK.GABREL@CROWNCASTLE.COM ZACHARY KELLY - A&E SPECIALIST ZACHARY.KELLY@CROWNCASTLE.COM (724) 416-9958

DRAWING INDEX

SHEET #	SHEET DESCRIPTION
T-1	TITLE SHEET
T-2	GENERAL NOTES
C-1.1	SITE PLAN
C-1.2	EXISTING & FINAL EQUIPMENT PLANS
C-2	FINAL ELEVATION & ANTENNA PLANS
C-3	EQUIPMENT DETAILS & COAX COLOR CODING
C-4	EQUIPMENT SPECIFICATIONS
C-5	EQUIPMENT SPECIFICATIONS
C-6	DELTA HPL3 - LB3 CONDUIT ROUTING CONF.
C-7	DELTA HPL3 SITE SUPPORT CABINET
C-8	DELTA LB3 BATTERY CABINET
C-9	ICE BRIDGE DETAIL
E-1	PANEL SCHEDULES & ONE-LINE DIAGRAM
E-2	ELECTRICAL DETAILS
G-1	TYPICAL FINAL GROUNDING SCHEMATIC
G-2	GROUNDING DETAILS
ATTACHED	MOUNT SPECIFICATIONS

ALL DRAWINGS CONTAINED HEREIN ARE FORMATTED FOR 11X17. CONTRACTOR SHALL VERIFY ALL PLANS AND EXISTING DIMENSIONS AND CONDITIONS ON THE JOB SITE AND SHALL IMMEDIATELY NOTIFY THE ENGINEER IN WRITING OF ANY DISCREPANCIES BEFORE PROCEEDING WITH THE WORK OR BE RESPONSIBLE FOR SAME.

CALL ILLINOIS ONE CALL
(800) 892-0123
CALL 3 WORKING DAYS BEFORE YOU DIG!

LOCATION MAP



NO SCALE

PROJECT DESCRIPTION

THE PURPOSE OF THIS PROJECT IS TO ENHANCE BROADBAND CONNECTIVITY AND CAPACITY TO THE EXISTING ELIGIBLE WIRELESS FACILITY.

TOWER SCOPE OF WORK:
- REMOVE (6) ANTENNAS
- REMOVE (6) RRHs
- REMOVE (3) FILTERS
- REMOVE (4) HYBRID CABLES
- REMOVE (1) PLATFORM MOUNT
- INSTALL (6) ANTENNAS
- INSTALL (6) RRHs
- INSTALL (2) HCS 2.0 BREAKOUT PENDANT
- INSTALL (2) HCS 2.0 HYBRID CABLE (1-1/2")
- INSTALL (1) PLATFORM MOUNT (PV-LPPGS-12M-HR2-AP2-NS)

GROUND SCOPE OF WORK:
- REMOVE (1) EQUIPMENT CABINET
- REMOVE (1) 200A PPC (12 SPACES)
- INSTALL (1) DELTA - HPL3 SITE SUPPORT CABINET
- INSTALL (1) DELTA - LB3 BATTERY CABINET
- INSTALL (1) ASIA, (2) ASIL, (3) ABIA, (3) ABIL, (1) ABIO,
- INSTALL (2) AMIA
- INSTALL (1) 200A PPC (24 SPACES)
- INSTALL (2) HCS 2.0 JUNCTION BOX
- INSTALL (1) VOLTAGE BOOSTER W/EXTRA BOOSTER
- INSTALL (1) CSR IXRe V2 (GEN2) ROUTER
- INSTALL (2) 2" CONDUITS FROM NEW PPC TO NEW SSC CABINET
- INSTALL 200A BREAKER (2 POLE, 4 SPACE) IN NEW PPC
- INSTALL (2) ICE BRIDGES (±8'-0")

APPLICABLE CODES/REFERENCE DOCUMENTS

ALL WORK SHALL BE PERFORMED AND MATERIALS INSTALLED IN ACCORDANCE WITH THE CURRENT EDITIONS OF THE FOLLOWING CODES AS ADOPTED BY THE LOCAL GOVERNING AUTHORITIES. NOTHING IN THESE PLANS IS TO BE CONSTRUED TO PERMIT WORK NOT CONFORMING TO THESE CODES:

CODE TYPE	CODE
BUILDING	2018 IBC
MECHANICAL	2018 IMC
ELECTRICAL	2017 NEC

REFERENCE DOCUMENTS:

STRUCTURAL ANALYSIS:	MORRISON HERSHFIELD
DATED:	JUNE 15, 2023
MOUNT ANALYSIS:	BY OTHERS
DATED:	
RFDS REVISION:	1
DATED:	03/27/2023
ORDER ID:	652107
REVISION:	0

INSTALLER NOTE:
NO PROPOSED LOADING TO BE ADDED UNTIL MOUNT SWAP IS COMPLETE. CONTRACTOR TO INSTALL MOUNT PER MANUFACTURER'S SPECIFICATIONS.

NOTE:
PRIOR TO ACCESSING/ENTERING THE SITE YOU MUST CONTACT THE CROWN NOC AT (800) 788-7011 & CROWN CONSTRUCTION MANAGER.

RECEIVED
MAY 18 2023
BY:

T-Mobile
8550 W. BRYN MAWR AVE, SUITE 100
CHICAGO, IL 60631

CROWN CASTLE
3025 HIGHLAND PKWY, SUITE 510,
DOWNERS GROVE, IL, 60515

POD
POWER OF DESIGN
11490 BLUEGRASS PKWY
LOUISVILLE, KY 40299
502-437-5252

T-MOBILE SITE NUMBER:
CH80545A

BU #: **875515**
180 ANETS

180 NORTH ANETS DRIVE
NORTHBROOK, IL 60062

EXISTING 100'-0" MONOPOLE

ISSUED FOR:

REV	DATE	DRWN	DESCRIPTION	DES/QA
0	6/21/2023	AS	CONSTRUCTION	MEP

MARK A. PATTERSON
062-067337
LICENSED PROFESSIONAL ENGINEER
STATE OF ILLINOIS
06/21/2023
EXPIRES: 11/30/2023

IT IS A VIOLATION OF LAW FOR ANY PERSON, UNLESS THEY ARE ACTING UNDER THE DIRECTION OF A LICENSED PROFESSIONAL ENGINEER, TO ALTER THIS DOCUMENT.

SHEET NUMBER: T-1
REVISION: 0

DigiSigner Document ID: d0df40e-7aee-48fd-85bf-5ed24f60df6a

CROWN CASTLE USA INC. SITE ACTIVITY REQUIREMENTS:

1. NOTICE TO PROCEED– NO WORK SHALL COMMENCE PRIOR TO CROWN CASTLE USA INC. WRITTEN NOTICE TO PROCEED (NTP) AND THE ISSUANCE OF A PURCHASE ORDER. PRIOR TO ACCESSING/ENTERING THE SITE YOU MUST CONTACT THE CROWN CASTLE USA INC. NOC AT 800-788-7011 & THE CROWN CASTLE USA INC. CONSTRUCTION MANAGER.
2. "LOOK UP" – CROWN CASTLE USA INC. SAFETY CLIMB REQUIREMENT:
   THE INTEGRITY OF THE SAFETY CLIMB AND ALL COMPONENTS OF THE CLIMBING FACILITY SHALL BE CONSIDERED DURING ALL STAGES OF DESIGN, INSTALLATION, AND INSPECTION. TOWER MODIFICATION, MOUNT REINFORCEMENTS, AND/OR EQUIPMENT INSTALLATIONS SHALL NOT COMPROMISE THE INTEGRITY OR FUNCTIONAL USE OF THE SAFETY CLIMB OR ANY COMPONENTS OF THE CLIMBING FACILITY ON THE STRUCTURE. THIS SHALL INCLUDE, BUT NOT BE LIMITED TO: PINCHING OF THE WIRE ROPE, BENDING OF THE WIRE ROPE FROM ITS SUPPORTS, DIRECT CONTACT OR CLOSE PROXIMITY TO THE WIRE ROPE WHICH MAY CAUSE FRICTIONAL WEAR, IMPACT TO THE ANCHORAGE POINTS IN ANY WAY, OR TO IMPEDE/BLOCK ITS INTENDED USE. ANY COMPROMISED SAFETY CLIMB, INCLUDING EXISTING CONDITIONS MUST BE TAGGED OUT AND REPORTED TO YOUR CROWN CASTLE USA INC. POC OR CALL THE NOC TO GENERATE A SAFETY CLIMB MAINTENANCE AND CONTRACTOR NOTICE TICKET.
3. PRIOR TO THE START OF CONSTRUCTION, ALL REQUIRED JURISDICTIONAL PERMITS SHALL BE OBTAINED. THIS INCLUDES, BUT IS NOT LIMITED TO, BUILDING, ELECTRICAL, MECHANICAL, FIRE, FLOOD ZONE, ENVIRONMENTAL, AND ZONING. AFTER ONSITE ACTIVITIES AND CONSTRUCTION ARE COMPLETED, ALL REQUIRED PERMITS SHALL BE SATISFIED AND CLOSED OUT ACCORDING TO LOCAL JURISDICTIONAL REQUIREMENTS.
4. ALL CONSTRUCTION MEANS AND METHODS; INCLUDING BUT NOT LIMITED TO, ERECTION PLANS, RIGGING PLANS, CLIMBING PLANS, AND RESCUE PLANS SHALL BE THE RESPONSIBILITY OF THE GENERAL CONTRACTOR RESPONSIBLE FOR THE EXECUTION OF THE WORK CONTAINED HEREIN, AND SHALL MEET ANSI/ASSE A10.48 (LATEST EDITION); FEDERAL, STATE, AND LOCAL REGULATIONS; AND ANY APPLICABLE INDUSTRY CONSENSUS STANDARDS RELATED TO THE CONSTRUCTION ACTIVITIES BEING PERFORMED. ALL RIGGING PLANS SHALL ADHERE TO ANSI/ASSE A10.48 (LATEST EDITION) AND CROWN CASTLE USA INC. STANDARD CCD-STD-10253, INCLUDING THE REQUIRED INVOLVEMENT OF A QUALIFIED ENGINEER FOR CLASS IV CONSTRUCTION, TO CERTIFY THE SUPPORTING STRUCTURE(S) IN ACCORDANCE WITH ANSI/TIA-322 (LATEST EDITION).
5. ALL SITE WORK TO COMPLY WITH CAS-STD-10068 "INSTALLATION STANDARDS FOR CONSTRUCTION ACTIVITIES ON CROWN CASTLE USA INC. TOWER SITE," CED-STD-10294 "STANDARD FOR INSTALLATION OF MOUNTS AND APPURTENANCES," AND LATEST VERSION OF ANSI/TIA-1019-A-2012 "STANDARD FOR INSTALLATION, ALTERATION, AND MAINTENANCE OF ANTENNA SUPPORTING STRUCTURES AND ANTENNAS."
6. IF THE SPECIFIED EQUIPMENT CAN NOT BE INSTALLED AS SHOWN ON THESE DRAWINGS, THE CONTRACTOR SHALL PROPOSE AN ALTERNATIVE INSTALLATION FOR APPROVAL BY CROWN CASTLE USA INC. PRIOR TO PROCEEDING WITH ANY SUCH CHANGE OF INSTALLATION.
7. ALL MATERIALS FURNISHED AND INSTALLED SHALL BE IN STRICT ACCORDANCE WITH ALL APPLICABLE CODES, REGULATIONS AND ORDINANCES. CONTRACTOR SHALL ISSUE ALL APPROPRIATE NOTICES AND COMPLY WITH ALL LAWS, ORDINANCES, RULES, REGULATIONS AND LAWFUL ORDERS OF ANY PUBLIC AUTHORITY REGARDING THE PERFORMANCE OF THE WORK. ALL WORK CARRIED OUT SHALL COMPLY WITH ALL APPLICABLE MUNICIPAL AND UTILITY COMPANY SPECIFICATIONS AND LOCAL JURISDICTIONAL CODES, ORDINANCES AND APPLICABLE REGULATIONS.
8. THE CONTRACTOR SHALL INSTALL ALL EQUIPMENT AND MATERIALS IN ACCORDANCE WITH MANUFACTURER'S RECOMMENDATIONS UNLESS SPECIFICALLY STATED OTHERWISE.
9. THE CONTRACTOR SHALL CONTACT UTILITY LOCATING SERVICES PRIOR TO THE START OF CONSTRUCTION.
10. ALL EXISTING ACTIVE SEWER, WATER, GAS, ELECTRIC AND OTHER UTILITIES WHERE ENCOUNTERED IN THE WORK, SHALL BE PROTECTED AT ALL TIMES AND WHERE REQUIRED FOR THE PROPER EXECUTION OF THE WORK, SHALL BE RELOCATED AS DIRECTED BY CONTRACTOR. EXTREME CAUTION SHOULD BE USED BY THE CONTRACTOR WHEN EXCAVATING OR DRILLING PIERS AROUND OR NEAR UTILITIES. CONTRACTOR SHALL PROVIDE SAFETY TRAINING FOR THE WORKING CREW. THIS WILL INCLUDE BUT NOT BE LIMITED TO A) FALL PROTECTION B) CONFINED SPACE C) ELECTRICAL SAFETY D) TRENCHING AND EXCAVATION E) CONSTRUCTION SAFETY PROCEDURES.
11. ALL SITE WORK SHALL BE AS INDICATED ON THE STAMPED CONSTRUCTION DRAWINGS AND PROJECT SPECIFICATIONS, LATEST APPROVED REVISION.
12. CONTRACTOR SHALL KEEP THE SITE FREE FROM ACCUMULATING WASTE MATERIAL, DEBRIS, AND TRASH AT THE COMPLETION OF THE WORK. IF NECESSARY, RUBBISH, STUMPS, DEBRIS, STICKS, STONES AND OTHER REFUSE SHALL BE REMOVED FROM THE SITE AND DISPOSED OF LEGALLY.
13. ALL EXISTING INACTIVE SEWER, WATER, GAS, ELECTRIC AND OTHER UTILITIES, WHICH INTERFERE WITH THE EXECUTION OF THE WORK, SHALL BE REMOVED AND/OR CAPPED, PLUGGED OR OTHERWISE DISCONTINUED AT POINTS WHICH WILL NOT INTERFERE WITH THE EXECUTION OF THE WORK, SUBJECT TO THE APPROVAL OF CONTRACTOR, TOWER OWNER, CROWN CASTLE USA INC., AND/OR LOCAL UTILITIES.
14. THE CONTRACTOR SHALL PROVIDE SITE SIGNAGE IN ACCORDANCE WITH THE TECHNICAL SPECIFICATION FOR SITE SIGNAGE REQUIRED BY LOCAL JURISDICTION AND SIGNAGE REQUIRED ON INDIVIDUAL PIECES OF EQUIPMENT, ROOMS, AND SHELTERS.
15. THE SITE SHALL BE GRADED TO CAUSE SURFACE WATER TO FLOW AWAY FROM THE CARRIER'S EQUIPMENT AND TOWER AREAS.
16. THE SUB GRADE SHALL BE COMPACTED AND BROUGHT TO A SMOOTH UNIFORM GRADE PRIOR TO FINISHED SURFACE APPLICATION.
17. THE AREAS OF THE OWNERS PROPERTY DISTURBED BY THE WORK AND NOT COVERED BY THE TOWER, EQUIPMENT OR DRIVEWAY, SHALL BE GRADED TO A UNIFORM SLOPE, AND STABILIZED TO PREVENT EROSION AS SPECIFIED ON THE CONSTRUCTION DRAWINGS AND/OR PROJECT SPECIFICATIONS.
18. CONTRACTOR SHALL MINIMIZE DISTURBANCE TO EXISTING SITE DURING CONSTRUCTION. EROSION CONTROL MEASURES, IF REQUIRED DURING CONSTRUCTION, SHALL BE IN CONFORMANCE WITH THE LOCAL GUIDELINES FOR EROSION AND SEDIMENT CONTROL.
19. THE CONTRACTOR SHALL PROTECT EXISTING IMPROVEMENTS, PAVEMENTS, CURBS, LANDSCAPING AND STRUCTURES. ANY DAMAGED PART SHALL BE REPAIRED AT CONTRACTOR'S EXPENSE TO THE SATISFACTION OF OWNER.
20. CONTRACTOR SHALL LEGALLY AND PROPERLY DISPOSE OF ALL SCRAP MATERIALS SUCH AS COAXIAL CABLES AND OTHER ITEMS REMOVED FROM THE EXISTING FACILITY. ANTENNAS REMOVED SHALL BE RETURNED TO THE OWNER'S DESIGNATED LOCATION.
21. CONTRACTOR SHALL LEAVE PREMISES IN CLEAN CONDITION. TRASH AND DEBRIS SHOULD BE REMOVED FROM SITE ON A DAILY BASIS.
22. NO FILL OR EMBANKMENT MATERIAL SHALL BE PLACED ON FROZEN GROUND. FROZEN MATERIALS, SNOW OR ICE SHALL NOT BE PLACED IN ANY FILL OR EMBANKMENT.

GENERAL NOTES:

1. FOR THE PURPOSE OF CONSTRUCTION DRAWING, THE FOLLOWING DEFINITIONS SHALL APPLY:
   CONTRACTOR: GENERAL CONTRACTOR RESPONSIBLE FOR CONSTRUCTION
   CARRIER: T-MOBILE
   TOWER OWNER: CROWN CASTLE USA INC.
2. THESE DRAWINGS HAVE BEEN PREPARED USING STANDARDS OF PROFESSIONAL CARE AND COMPLETENESS NORMALLY EXERCISED UNDER SIMILAR CIRCUMSTANCES BY REPUTABLE ENGINEERS IN THIS OR SIMILAR LOCALITIES. IT IS ASSUMED THAT THE WORK DEPICTED WILL BE PERFORMED BY AN EXPERIENCED CONTRACTOR AND/OR WORKPEOPLE WHO HAVE A WORKING KNOWLEDGE OF THE APPLICABLE CODE STANDARDS AND REQUIREMENTS AND OF INDUSTRY ACCEPTED STANDARD GOOD PRACTICE. AS NOT EVERY CONDITION OR ELEMENT IS (OR CAN BE) EXPLICITLY SHOWN ON THESE DRAWINGS, THE CONTRACTOR SHALL USE INDUSTRY ACCEPTED STANDARD GOOD PRACTICE FOR MISCELLANEOUS WORK NOT EXPLICITLY SHOWN.
3. THESE DRAWINGS REPRESENT THE FINISHED STRUCTURE. THEY DO NOT INDICATE THE MEANS OR METHODS OF CONSTRUCTION. THE CONTRACTOR SHALL BE SOLELY RESPONSIBLE FOR THE CONSTRUCTION MEANS, METHODS, TECHNIQUES, SEQUENCES, AND PROCEDURES. THE CONTRACTOR SHALL PROVIDE ALL MEASURES NECESSARY FOR PROTECTION OF LIFE AND PROPERTY DURING CONSTRUCTION. SUCH MEASURES SHALL INCLUDE, BUT NOT BE LIMITED TO, BRACING, FORMWORK, SHORING, ETC. SITE VISITS BY THE ENGINEER OR HIS REPRESENTATIVE WILL NOT INCLUDE INSPECTION OF THESE ITEMS AND IS FOR STRUCTURAL OBSERVATION OF THE FINISHED STRUCTURE ONLY.
4. NOTES AND DETAILS IN THE CONSTRUCTION DRAWINGS SHALL TAKE PRECEDENCE OVER GENERAL NOTES AND TYPICAL DETAILS. WHERE NO DETAILS ARE SHOWN, CONSTRUCTION SHALL CONFORM TO SIMILAR WORK ON THE PROJECT, AND/OR AS PROVIDED FOR IN THE CONTRACT DOCUMENTS. WHERE DISCREPANCIES OCCUR BETWEEN PLANS, DETAILS, GENERAL NOTES, AND SPECIFICATIONS, THE GREATER, MORE STRICT REQUIREMENTS, SHALL GOVERN. IF FURTHER CLARIFICATION IS REQUIRED CONTACT THE ENGINEER OF RECORD.
5. SUBSTANTIAL EFFORT HAS BEEN MADE TO PROVIDE ACCURATE DIMENSIONS AND MEASUREMENTS ON THE DRAWINGS TO ASSIST IN THE FABRICATION AND/OR PLACEMENT OF CONSTRUCTION ELEMENTS BUT IT IS THE SOLE RESPONSIBILITY OF THE CONTRACTOR TO FIELD VERIFY THE DIMENSIONS, MEASUREMENTS, AND/OR CLEARANCES SHOWN IN THE CONSTRUCTION DRAWINGS PRIOR TO FABRICATION OR CUTTING OF ANY NEW OR EXISTING CONSTRUCTION ELEMENTS. IF IT IS DETERMINED THAT THERE ARE DISCREPANCIES AND/OR CONFLICTS WITH THE CONSTRUCTION DRAWINGS THE ENGINEER OF RECORD IS TO BE NOTIFIED AS SOON AS POSSIBLE.
6. PRIOR TO THE SUBMISSION OF BIDS, THE BIDDING CONTRACTOR SHALL VISIT THE CELL SITE TO FAMILIARIZE WITH THE EXISTING CONDITIONS AND TO CONFIRM THAT THE WORK CAN BE ACCOMPLISHED AS SHOWN ON THE CONSTRUCTION DRAWINGS. ANY DISCREPANCY FOUND SHALL BE BROUGHT TO THE ATTENTION OF CROWN CASTLE.
7. ALL MATERIALS FURNISHED AND INSTALLED SHALL BE IN STRICT ACCORDANCE WITH ALL APPLICABLE CODES, REGULATIONS AND ORDINANCES. CONTRACTOR SHALL ISSUE ALL APPROPRIATE NOTICES AND COMPLY WITH ALL LAWS, ORDINANCES, RULES, REGULATIONS AND LAWFUL ORDERS OF ANY PUBLIC AUTHORITY REGARDING THE PERFORMANCE OF THE WORK. ALL WORK CARRIED OUT SHALL COMPLY WITH ALL APPLICABLE MUNICIPAL AND UTILITY COMPANY SPECIFICATIONS AND LOCAL JURISDICTIONAL CODES, ORDINANCES AND APPLICABLE REGULATIONS.
8. UNLESS NOTED OTHERWISE, THE WORK SHALL INCLUDE FURNISHING MATERIALS, EQUIPMENT, APPURTENANCES AND LABOR NECESSARY TO COMPLETE ALL INSTALLATIONS AS INDICATED ON THE DRAWINGS.
9. THE CONTRACTOR SHALL INSTALL ALL EQUIPMENT AND MATERIALS IN ACCORDANCE WITH MANUFACTURER'S RECOMMENDATIONS UNLESS SPECIFICALLY STATED OTHERWISE.
10. IF THE SPECIFIED EQUIPMENT CAN NOT BE INSTALLED AS SHOWN ON THESE DRAWINGS, THE CONTRACTOR SHALL PROPOSE AN ALTERNATIVE INSTALLATION FOR APPROVAL BY THE CARRIER AND CROWN CASTLE PRIOR TO PROCEEDING WITH ANY SUCH CHANGE OF INSTALLATION.
11. CONTRACTOR IS TO PERFORM A SITE INVESTIGATION AND IS TO DETERMINE THE BEST ROUTING OF ALL CONDUITS FOR POWER, AND TELCO AND FOR GROUNDING CABLES AS SHOWN IN THE POWER, TELCO, AND GROUNDING PLAN DRAWINGS.
12. THE CONTRACTOR SHALL PROTECT EXISTING IMPROVEMENTS, PAVEMENTS, CURBS, LANDSCAPING AND STRUCTURES. ANY DAMAGED PART SHALL BE REPAIRED AT CONTRACTOR'S EXPENSE TO THE SATISFACTION OF CROWN CASTLE USA INC.
13. CONTRACTOR SHALL LEGALLY AND PROPERLY DISPOSE OF ALL SCRAP MATERIALS SUCH AS COAXIAL CABLES AND OTHER ITEMS REMOVED FROM THE EXISTING FACILITY. ANTENNAS REMOVED SHALL BE RETURNED TO THE OWNER'S DESIGNATED LOCATION.
14. CONTRACTOR SHALL LEAVE PREMISES IN CLEAN CONDITION. TRASH AND DEBRIS SHOULD BE REMOVED FROM SITE ON A DAILY BASIS.

CONCRETE, FOUNDATIONS, AND REINFORCING STEEL:

1. ALL CONCRETE WORK SHALL BE IN ACCORDANCE WITH THE ACI 301, ACI 318, ACI 336, ASTM A184, ASTM A185 AND THE DESIGN AND CONSTRUCTION SPECIFICATION FOR CAST-IN-PLACE CONCRETE.
2. UNLESS NOTED OTHERWISE, SOIL BEARING PRESSURE USED FOR DESIGN OF SLABS AND FOUNDATIONS IS ASSUMED TO BE 1000 psf.
3. ALL CONCRETE SHALL HAVE A MINIMUM COMPRESSIVE STRENGTH (f'c) OF 3000 psi AT 28 DAYS, UNLESS NOTED OTHERWISE. NO MORE THAN 90 MINUTES SHALL ELAPSE FROM BATCH TIME TO TIME OF PLACEMENT UNLESS APPROVED BY THE ENGINEER OF RECORD. TEMPERATURE OF CONCRETE SHALL NOT EXCEED 90°F AT TIME OF PLACEMENT.
4. CONCRETE EXPOSED TO FREEZE-THAW CYCLES SHALL CONTAIN AIR ENTRAINING ADMIXTURES. AMOUNT OF AIR ENTRAINMENT TO BE BASED ON SIZE OF AGGREGATE AND F3 CLASS EXPOSURE (VERY SEVERE). CEMENT USED TO BE TYPE II PORTLAND CEMENT WITH A MAXIMUM WATER-TO-CEMENT RATIO (W/C) OF 0.45.
5. ALL STEEL REINFORCING SHALL CONFORM TO ASTM A615. ALL WELDED WIRE FABRIC (WWF) SHALL CONFORM TO ASTM A185. ALL SPLICES SHALL BE CLASS "B" TENSION SPLICES, UNLESS NOTED OTHERWISE. ALL HOOKS SHALL BE STANDARD 90 DEGREE HOOKS, UNLESS NOTED OTHERWISE. YIELD STRENGTH (Fy) OF STANDARD DEFORMED BARS ARE AS FOLLOWS:
   #4 BARS AND SMALLER..... 40 ksi
   #5 BARS AND LARGER..... 60 ksi
6. THE FOLLOWING MINIMUM CONCRETE COVER SHALL BE PROVIDED FOR REINFORCING STEEL UNLESS SHOWN OTHERWISE ON DRAWINGS:
   CONCRETE CAST AGAINST AND PERMANENTLY EXPOSED TO EARTH..... 3"
   CONCRETE EXPOSED TO EARTH OR WEATHER:
   #6 BARS AND LARGER..... 2"
   #5 BARS AND SMALLER..... 1-1/2"
   CONCRETE NOT EXPOSED TO EARTH OR WEATHER:
   SLAB AND WALLS..... 3/4"
   BEAMS AND COLUMNS..... 1-1/2"
7. A TOOLED EDGE OR A 3/4" CHAMFER SHALL BE PROVIDED AT ALL EXPOSED EDGES OF CONCRETE, UNLESS NOTED OTHERWISE, IN ACCORDANCE WITH ACI 301 SECTION 4.2.4.

GREENFIELD GROUNDING NOTES:

1. ALL GROUND ELECTRODE SYSTEMS (INCLUDING TELECOMMUNICATION, RADIO, LIGHTNING PROTECTION AND AC POWER GES'S) SHALL BE BONDED TOGETHER AT OR BELOW GRADE, BY TWO OR MORE COPPER BONDING CONDUCTORS IN ACCORDANCE WITH THE NEC.
2. THE CONTRACTOR SHALL PERFORM IEEE FALL-OF-POTENTAL RESISTANCE TO EARTH TESTING (PER IEEE 1100 AND 81) FOR GROUND ELECTRODE SYSTEMS. THE CONTRACTOR SHALL FURNISH AND INSTALL SUPPLEMENTAL GROUND ELECTRODES AS NEEDED TO ACHIEVE A TEST RESULT OF 5 OHMS OR LESS.
3. THE CONTRACTOR IS RESPONSIBLE FOR PROPERLY SEQUENCING GROUNDING AND UNDERGROUND CONDUIT INSTALLATION AS TO PREVENT ANY LOSS OF CONTINUITY IN THE GROUNDING SYSTEM OR DAMAGE TO THE CONDUIT AND PROVIDE TESTING RESULTS.
4. METAL CONDUIT AND TRAY SHALL BE GROUNDED AND MADE ELECTRICALLY CONTINUOUS WITH LISTED BONDING FITTINGS OR BY BONDING ACROSS THE DISCONTINUITY WITH #6 COPPER WIRE UL APPROVED GROUNDING TYPE CONDUIT CLAMPS.
5. METAL RACEWAY SHALL NOT BE USED AS THE NEC REQUIRED EQUIPMENT GROUND CONDUCTOR. STRANDED COPPER CONDUCTORS WITH GREEN INSULATION, SIZED IN ACCORDANCE WITH THE NEC, SHALL BE FURNISHED AND INSTALLED WITH THE POWER CIRCUITS TO BTS EQUIPMENT.
6. EACH CABINET FRAME SHALL BE DIRECTLY CONNECTED TO THE MASTER GROUND BAR WITH GREEN INSULATED SUPPLEMENTAL EQUIPMENT GROUND WIRES, #6 STRANDED COPPER OR LARGER FOR INDOOR BTS; #2 BARE SOLID TINNED COPPER FOR OUTDOOR BTS.
7. CONNECTIONS TO THE GROUND BUS SHALL NOT BE DOUBLED UP OR STACKED BACK TO BACK. CONNECTIONS ON OPPOSITE SIDE OF THE GROUND BUS ARE PERMITTED.
8. ALL EXTERIOR GROUND CONDUCTORS BETWEEN EQUIPMENT/GROUND BARS AND THE GROUND RING SHALL BE #2 SOLID TINNED COPPER UNLESS OTHERWISE INDICATED.
9. ALUMINUM CONDUCTOR OR COPPER CLAD STEEL CONDUCTOR SHALL NOT BE USED FOR GROUNDING CONNECTIONS.
10. USE OF 90° BENDS IN THE PROTECTION GROUNDING CONDUCTORS SHALL BE AVOIDED WHEN 45° BENDS CAN BE ADEQUATELY SUPPORTED.
11. EXOTHERMIC WELDS SHALL BE USED FOR ALL GROUNDING CONNECTIONS BELOW GRADE.
12. ALL GROUND CONNECTIONS ABOVE GRADE (INTERIOR AND EXTERIOR) SHALL BE FORMED USING HIGH PRESS CRIMPS.
13. COMPRESSION GROUND CONNECTIONS MAY BE REPLACED BY EXOTHERMIC WELD CONNECTIONS.
14. ICE BRIDGE BONDING CONDUCTORS SHALL BE EXOTHERMICALLY BONDED OR BOLTED TO THE BRIDGE AND THE TOWER GROUND BAR.
15. APPROVED ANTIOXIDANT COATINGS (i.e. CONDUCTIVE GEL OR PASTE) SHALL BE USED ON ALL COMPRESSION AND BOLTED GROUND CONNECTIONS.
16. ALL EXTERIOR GROUND CONNECTIONS SHALL BE COATED WITH A CORROSION RESISTANT MATERIAL.
17. MISCELLANEOUS ELECTRICAL AND NON-ELECTRICAL METAL BOXES, FRAMES AND SUPPORTS SHALL BE BONDED TO THE GROUND RING, IN ACCORDANCE WITH THE NEC.
18. BOND ALL METALLIC OBJECTS WITHIN 6 ft OF MAIN GROUND RING WITH (1) #2 BARE SOLID TINNED COPPER GROUND CONDUCTOR.
19. GROUND CONDUCTORS USED FOR THE FACILITY GROUNDING AND LIGHTNING PROTECTION SYSTEMS SHALL NOT BE ROUTED THROUGH METALLIC OBJECTS THAT FORM A RING AROUND THE CONDUCTOR, SUCH AS METALLIC CONDUITS, METAL SUPPORT CLIPS OR SLEEVES THROUGH WALLS OR FLOORS. WHEN IT IS REQUIRED TO BE HOUSED IN CONDUIT TO MEET CODE REQUIREMENTS OR LOCAL CONDITIONS, NON-METALLIC MATERIAL SUCH AS PVC CONDUIT SHALL BE USED. WHERE USE OF METAL CONDUIT IS UNAVOIDABLE (i.e., NONMETALLIC CONDUIT PROHIBITED BY LOCAL CODE) THE GROUND CONDUCTOR SHALL BE BONDED TO EACH END OF THE METAL CONDUIT.
20. ALL GROUNDS THAT TRANSITION FROM BELOW GRADE TO ABOVE GRADE MUST BE #2 BARE SOLID TINNED COPPER IN 3/4" NON-METALLIC, FLEXIBLE CONDUIT FROM 24" BELOW GRADE TO WITHIN 3" TO 6" OF CAD-WELD TERMINATION POINT. THE EXPOSED END OF THE CONDUIT MUST BE SEALED WITH SILICONE CAULK. (ADD TRANSITIONING GROUND STANDARD DETAIL AS WELL).
21. BUILDINGS WHERE THE MAIN GROUNDING CONDUCTORS ARE REQUIRED TO BE ROUTED TO GRADE, THE CONTRACTOR SHALL ROUTE TWO GROUNDING CONDUCTORS FROM THE ROOFTOP, TOWERS, AND WATER TOWERS GROUNDING RING, TO THE EXISTING GROUNDING SYSTEM. THE GROUNDING CONDUCTORS SHALL NOT BE SMALLER THAN 2/0 COPPER. ROOFTOP GROUNDING RING SHALL BE BONDED TO THE EXISTING GROUNDING SYSTEM, THE BUILDING STEEL COLUMNS, LIGHTNING PROTECTION SYSTEM, AND BUILDING MAIN WATER LINE (FERROUS OR NONFERROUS METAL PIPING ONLY).

ELECTRICAL INSTALLATION NOTES:

1. ALL ELECTRICAL WORK SHALL BE PERFORMED IN ACCORDANCE WITH THE PROJECT SPECIFICATIONS, NEC AND ALL APPLICABLE FEDERAL, STATE, AND LOCAL CODES/ORDINANCES.
2. CONDUIT ROUTINGS ARE SCHEMATIC. CONTRACTOR SHALL INSTALL CONDUITS SO THAT ACCESS TO EQUIPMENT IS NOT BLOCKED AND TRIP HAZARDS ARE ELIMINATED.
3. WIRING, RACEWAY AND SUPPORT METHODS AND MATERIALS SHALL COMPLY WITH THE REQUIREMENTS OF THE NEC.
4. ALL CIRCUITS SHALL BE SEGREGATED AND MAINTAIN MINIMUM CABLE SEPARATION AS REQUIRED BY THE NEC.
   4.1. ALL EQUIPMENT SHALL BEAR THE UNDERWRITERS LABORATORIES LABEL OF APPROVAL, AND SHALL CONFORM TO REQUIREMENT OF THE NATIONAL ELECTRICAL CODE.
   4.2. ALL OVERCURRENT DEVICES SHALL HAVE AN INTERRUPTING CURRENT RATING THAT SHALL BE GREATER THAN THE SHORT CIRCUIT CURRENT TO WHICH THEY ARE SUBJECTED, 22,000 AIC MINIMUM. VERIFY AVAILABLE SHORT CIRCUIT CURRENT DOES NOT EXCEED THE RATING OF ELECTRICAL EQUIPMENT IN ACCORDANCE WITH ARTICLE 110.24 NEC OR THE MOST CURRENT ADOPTED CODE PER THE GOVERNING JURISDICTION.
5. EACH END OF EVERY POWER PHASE CONDUCTOR, GROUNDING CONDUCTOR, AND TELCO CONDUCTOR OR CABLE SHALL BE LABELLED WITH COLOR-CODED INSULATION OR ELECTRICAL TAPE (3M BRAND, 1/2" PLASTIC ELECTRICAL TAPE WITH UV PROTECTION, OR EQUAL). THE IDENTIFICATION METHOD SHALL CONFORM WITH NEC AND OSHA.
6. ALL ELECTRICAL COMPONENTS SHALL BE CLEARLY LABELED WITH LAMICOID TAGS SHOWING THEIR RATED VOLTAGE, PHASE CONFIGURATION, WIRE CONFIGURATION, POWER OR AMPACITY RATING AND BRANCH CIRCUIT ID NUMBERS (i.e. PANEL BOARD AND CIRCUIT ID'S).
7. PANEL BOARDS (ID NUMBERS) SHALL BE CLEARLY LABELED WITH PLASTIC LABELS.
8. ALL TIE WRAPS SHALL BE CUT FLUSH WITH APPROVED CUTTING TOOL TO REMOVE SHARP EDGES.
9. ALL POWER AND EQUIPMENT GROUND WIRING IN TUBING OR CONDUIT SHALL BE SINGLE COPPER CONDUCTOR (#12 OR LARGER) WITH TYPE THHW, THWN, THWN-2, XHHW, XHHW-2, THW, THW-2, RHW, OR RHW-2 INSULATION UNLESS OTHERWISE SPECIFIED.
10. SUPPLEMENTAL EQUIPMENT GROUND WIRING LOCATED INDOORS SHALL BE SINGLE COPPER CONDUCTOR (#6 OR LARGER) WITH TYPE THHW, THWN, THWN-2, XHHW, XHHW-2, THW, THW-2, RHW, OR RHW-2 INSULATION UNLESS OTHERWISE SPECIFIED.
11. POWER AND CONTROL WIRING IN FLEXIBLE CORD SHALL BE MULTI-CONDUCTOR, TYPE SOOW CORD (#14 OR LARGER) UNLESS OTHERWISE SPECIFIED.
12. POWER AND CONTROL WIRING FOR USE IN CABLE TRAY SHALL BE MULTI-CONDUCTOR, TYPE TC CABLE (#14 OR LARGER), WITH TYPE THHW, THWN, THWN-2, XHHW, XHHW-2, THW, THW-2, RHW, OR RHW-2 INSULATION UNLESS OTHERWISE SPECIFIED.
13. ALL POWER AND GROUNDING CONNECTIONS SHALL BE CRIMP-STYLE. COMPRESSION WIRE LUGS AND WIRE NUTS BY THOMAS AND BETTS (OR EQUAL). LUGS AND WIRE NUTS SHALL BE RATED FOR OPERATION NOT LESS THAN 75° C (90° C IF AVAILABLE).
14. RACEWAY AND CABLE TRAY SHALL BE LISTED OR LABELED FOR ELECTRICAL USE IN ACCORDANCE WITH NEMA, UL, ANSI/IEEE AND NEC.
15. ELECTRICAL METALLIC TUBING (EMT), INTERMEDIATE METAL CONDUIT (IMC), OR RIGID METAL CONDUIT (RMC) SHALL BE USED FOR EXPOSED INDOOR LOCATIONS.
16. ELECTRICAL METALLIC TUBING (EMT) OR METAL-CLAD CABLE (MC) SHALL BE USED FOR CONCEALED INDOOR LOCATIONS.
17. SCHEDULE 40 PVC UNDERGROUND ON STRAIGHTS AND SCHEDULE 80 PVC FOR ALL ELBOWS/90s AND ALL APPROVED ABOVE GRADE PVC CONDUIT.
18. LIQUID-TIGHT FLEXIBLE METALLIC CONDUIT (LIQUID-TITE FLEX) SHALL BE USED INDOORS AND OUTDOORS, WHERE VIBRATION OCCURS OR FLEXIBILITY IS NEEDED.
19. CONDUIT AND TUBING FITTINGS SHALL BE THREADED OR COMPRESSION-TYPE AND APPROVED FOR THE LOCATION USED. SET SCREW FITTINGS ARE NOT ACCEPTABLE.
20. CABINETS, BOXES AND WIRE WAYS SHALL BE LABELED FOR ELECTRICAL USE IN ACCORDANCE WITH NEMA, UL, ANSI/IEEE AND THE NEC.
21. WIREWAYS SHALL BE METAL WITH AN ENAMEL FINISH AND INCLUDE A HINGED COVER, DESIGNED TO SWING OPEN DOWNWARDS (WIREMOLD SPECMATE WIREWAY).
22. SLOTTED WIRING DUCT SHALL BE PVC AND INCLUDE COVER (PANDUIT TYPE E OR EQUAL).
23. CONDUITS SHALL BE FASTENED SECURELY IN PLACE WITH APPROVED NON-PERFORATED STRAPS AND HANGERS. EXPLOSIVE DEVICES (i.e. POWDER-ACTUATED) FOR ATTACHING HANGERS TO STRUCTURE WILL NOT BE PERMITTED. CLOSELY FOLLOW THE LINES OF THE STRUCTURE, MAINTAIN CLOSE PROXIMITY TO THE STRUCTURE AND KEEP CONDUITS IN TIGHT ENVELOPES. CHANGES IN DIRECTION TO ROUTE AROUND OBSTACLES SHALL BE MADE WITH CONDUIT OUTLET BODIES. CONDUIT SHALL BE INSTALLED IN A NEAT AND WORKMANLIKE MANNER. PARALLEL AND PERPENDICULAR TO STRUCTURE WALL AND CEILING LINES. ALL CONDUIT SHALL BE FISHED TO CLEAR OBSTRUCTIONS. ENDS OF CONDUITS SHALL BE TEMPORARILY CAPPED FLUSH TO FINISH GRADE TO PREVENT CONCRETE, PLASTER OR DIRT FROM ENTERING. CONDUITS SHALL BE RIGIDLY CLAMPED TO BOXES BY GALVANIZED MALLEABLE IRON BUSHING ON INSIDE AND GALVANIZED MALLEABLE IRON LOCKNUT ON OUTSIDE AND INSIDE.
24. EQUIPMENT CABINETS, TERMINAL BOXES, JUNCTION BOXES AND PULL BOXES SHALL BE GALVANIZED OR EPOXY-COATED SHEET STEEL. SHALL MEET OR EXCEED UL 50 AND BE RATED NEMA 1 (OR BETTER) FOR INTERIOR LOCATIONS AND NEMA 3R (OR BETTER) FOR EXTERIOR LOCATIONS.
25. METAL RECEPTACLE, SWITCH AND DEVICE BOXES SHALL BE GALVANIZED, EPOXY-COATED OR NON-CORRODING; SHALL MEET OR EXCEED UL 514A AND NEMA OS 1 AND BE RATED NEMA 1 (OR BETTER) FOR INTERIOR LOCATIONS AND WEATHER PROTECTED (WP OR BETTER) FOR EXTERIOR LOCATIONS.
26. NONMETALLIC RECEPTACLE, SWITCH AND DEVICE BOXES SHALL MEET OR EXCEED NEMA OS 2 (NEWEST REVISION) AND BE RATED NEMA 1 (OR BETTER) FOR INTERIOR LOCATIONS AND WEATHER PROTECTED (WP OR BETTER) FOR EXTERIOR LOCATIONS.
27. THE CONTRACTOR SHALL NOTIFY AND OBTAIN NECESSARY AUTHORIZATION FROM THE CARRIER AND/OR CROWN CASTLE USA INC. BEFORE COMMENCING WORK ON THE AC POWER DISTRIBUTION PANELS.
28. THE CONTRACTOR SHALL PROVIDE NECESSARY TAGGING ON THE BREAKERS, CABLES AND DISTRIBUTION PANELS IN ACCORDANCE WITH THE APPLICABLE CODES AND STANDARDS TO SAFEGUARD LIFE AND PROPERTY.
29. INSTALL LAMICOID LABEL ON THE METER CENTER TO SHOW "T-MOBILE".
30. ALL EMPTY/SPARE CONDUITS THAT ARE INSTALLED ARE TO HAVE A METERED MULE TAPE PULL CORD INSTALLED.

CONDUCTOR COLOR CODE

SYSTEM	CONDUCTOR	COLOR
120/240V, 1Ø	A PHASE	BLACK
	B PHASE	RED
	NEUTRAL	WHITE
	GROUND	GREEN
120/208V, 3Ø	A PHASE	BLACK
	B PHASE	RED
	C PHASE	BLUE
	NEUTRAL	WHITE
	GROUND	GREEN
277/480V, 3Ø	A PHASE	BROWN
	B PHASE	ORANGE OR PURPLE
	C PHASE	YELLOW
	NEUTRAL	GREY
	GROUND	GREEN
DC VOLTAGE	POS (+)	RED**
	NEG (-)	BLACK**

* SEE NEC 210.5(C)(1) AND (2)
** POLARITY MARKED AT TERMINATION

APWA UNIFORM COLOR CODE:

WHITE	PROPOSED EXCAVATION
PINK	TEMPORARY SURVEY MARKIN

DigiSigner Document ID: d0dff10a-7aae-48fd-85bf-5ed21f60df6e

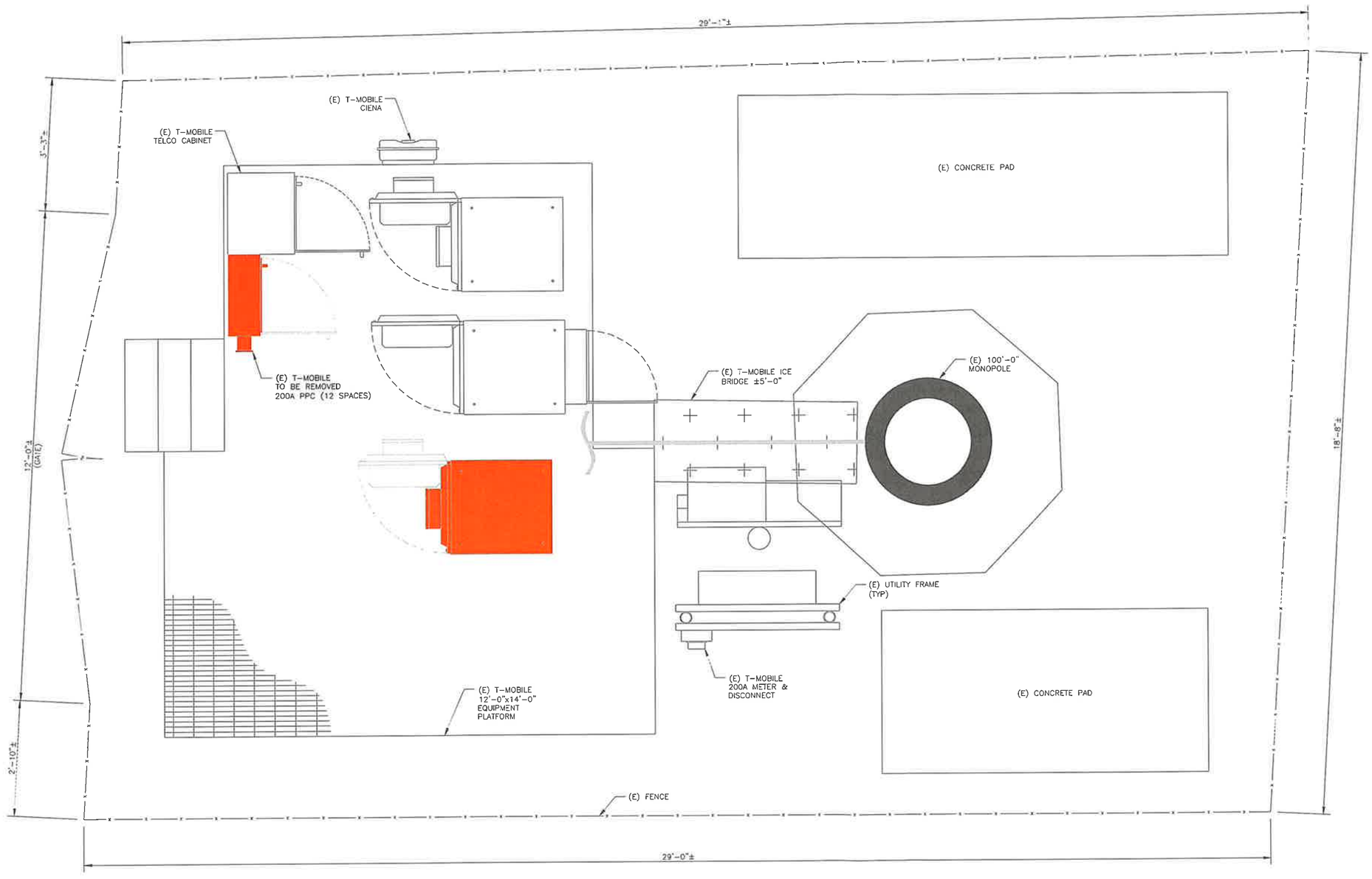

1 SITE PLAN
SCALE: 1' 0 1' 3/4"=1'-0" (FULL SIZE) 3/8"=1'-0" (11x17)

N

T-Mobile
8550 W. BRYN MAWR AVE, SUITE 100
CHICAGO, IL 60631

CROWN CASTLE
3025 HIGHLAND PKWY, SUITE 510,
DOWNERS GROVE, IL, 60515

POD
POWER OF DESIGN
11490 BLUEGRASS PKWY
LOUISVILLE, KY 40299
502-437-5252

T-MOBILE SITE NUMBER:
CH80545A

BU #: **875515**
180 ANETS

180 NORTH ANETS DRIVE
NORTHBROOK, IL 60062

EXISTING 100'-0" MONOPOLE

ISSUED FOR:

REV	DATE	DRWN	DESCRIPTION	DES /QA
0	6/21/2023	AS	CONSTRUCTION	MEP

MARK A. PATTERSON
062-067337
LICENSED PROFESSIONAL ENGINEER
STATE OF ILLINOIS
06/21/2023
EXPIRIES: 11/30/2023

IT IS A VIOLATION OF LAW FOR ANY PERSON, UNLESS THEY ARE ACTING UNDER THE DIRECTION OF A LICENSED PROFESSIONAL ENGINEER, TO ALTER THIS DOCUMENT.

SHEET NUMBER: C-1.1
REVISION: 0

DigiSigner Document ID: d0dff40a-7aae-48fd-85bf-5ed24f60df6e

EQUIPMENT LEGEND:

- EXISTING
- TO BE RELOCATED/REMOVED
- NEW

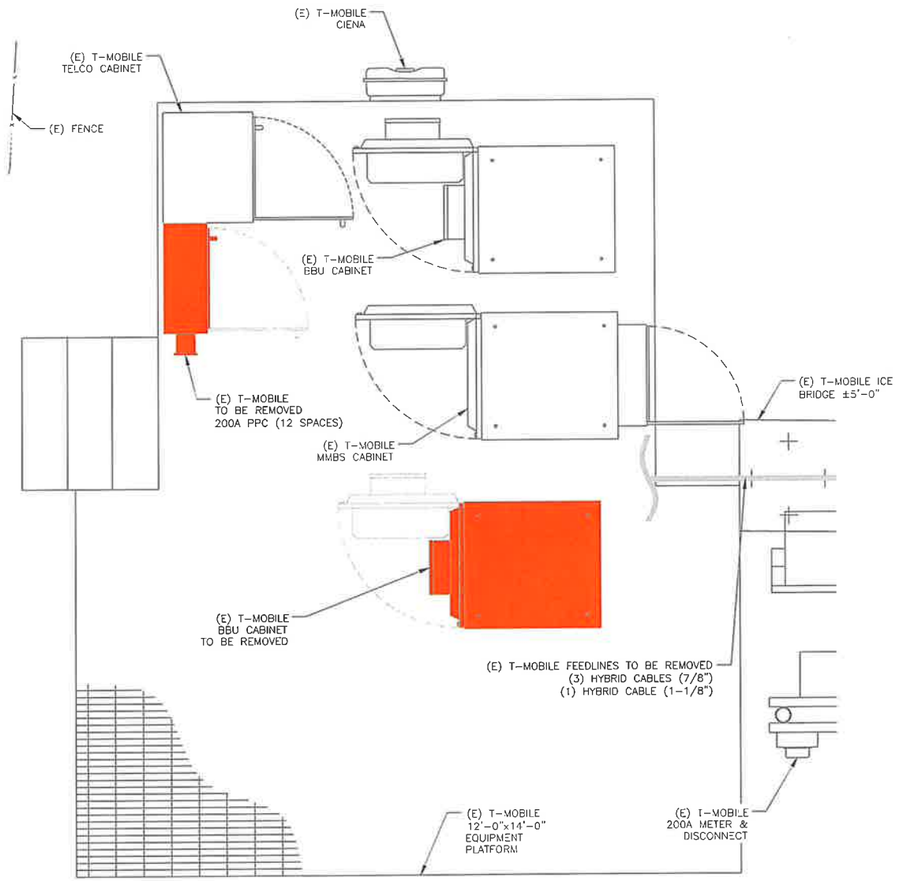

1 EXISTING EQUIPMENT PLAN
SCALE: 1" 0 1" 3/4"=1'-0" (FULL SIZE) 3/8"=1'-0" (11x17)

N

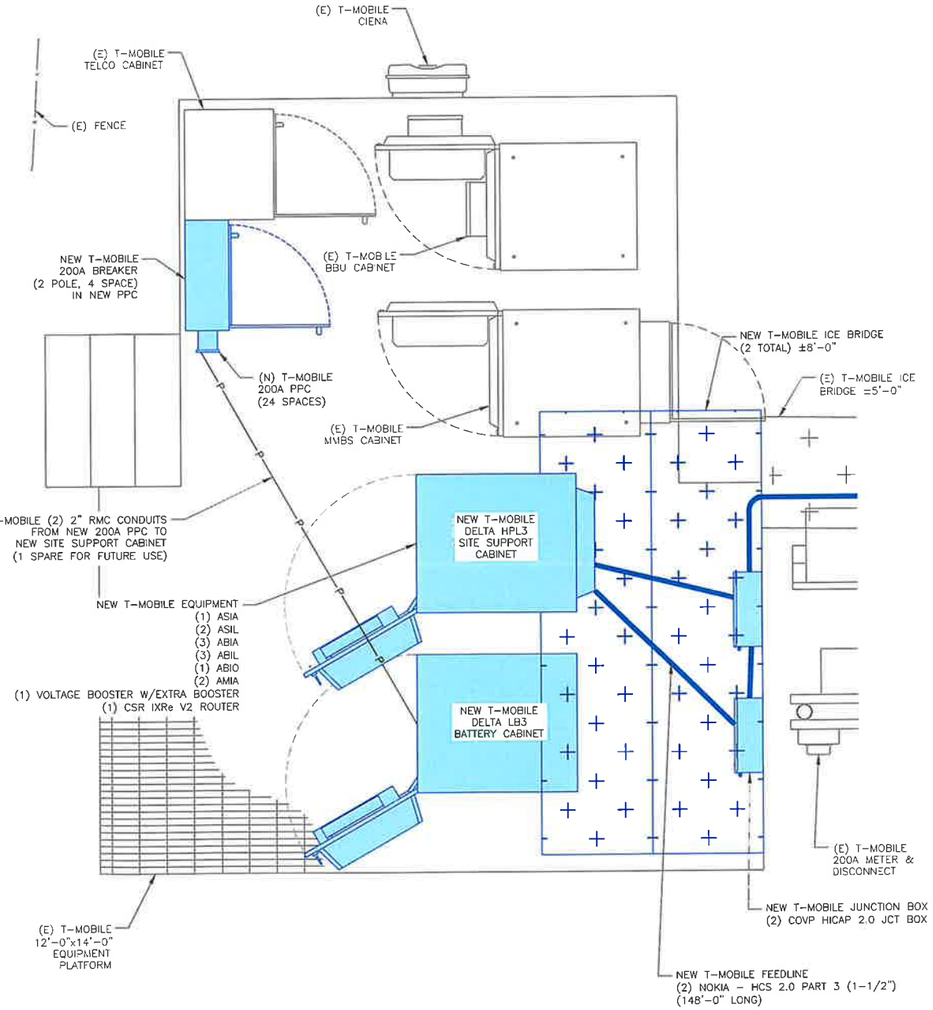

2 FINAL EQUIPMENT PLAN
SCALE: 1" 0 1" 3/4"=1'-0" (FULL SIZE) 3/8"=1'-0" (11x17)

N

T-Mobile
8550 W. BRYN MAWR AVE, SUITE 100
CHICAGO, IL 60631

CROWN CASTLE
3025 HIGHLAND PKWY, SUITE 510,
DOWNERS GROVE, IL, 60515

POD
POWER OF DESIGN
11490 BLUEGRASS PKWY
LOUISVILLE, KY 40299
502-437-5252

T-MOBILE SITE NUMBER:
CH80545A

BU #: **875515**
180 ANETS

180 NORTH ANETS DRIVE
NORTHBROOK, IL 60062

EXISTING 100'-0" MONOPOLE

ISSUED FOR:

REV	DATE	DRWN	DESCRIPTION	DES /QA
0	6/21/2023	AS	CONSTRUCTION	MEP

MARK PATTERSON
062-067337
LICENSED PROFESSIONAL ENGINEER
STATE OF ILLINOIS
06/21/2023
EXPIRIES: 11/30/2023

IT IS A VIOLATION OF LAW FOR ANY PERSON, UNLESS THEY ARE ACTING UNDER THE DIRECTION OF A LICENSED PROFESSIONAL ENGINEER, TO ALTER THIS DOCUMENT.

SHEET NUMBER: C-1.2
REVISION: 0

DigiSigner Document ID: d0dff40e-7aee-48fd-85bf-5ed24f60df6e

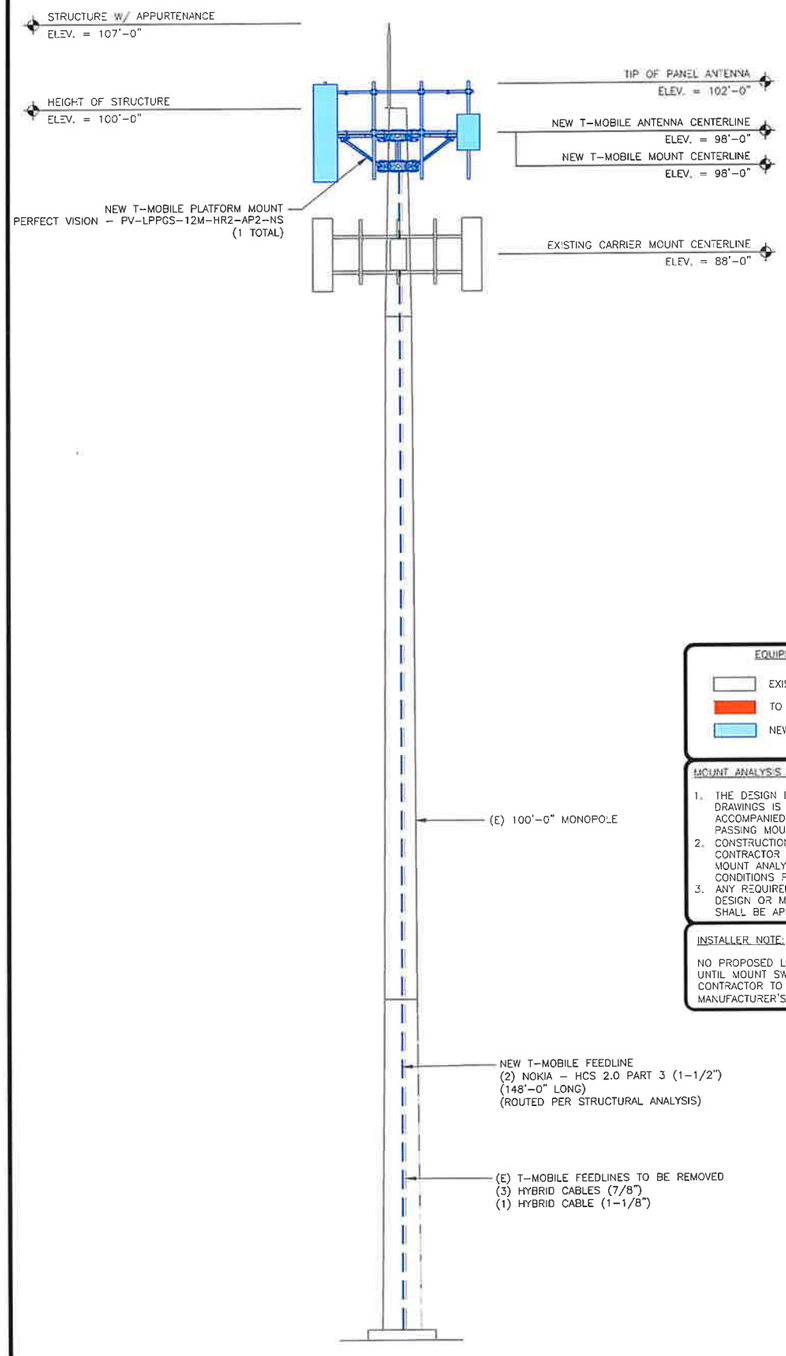

1 FINAL ELEVATION
SCALE: NOT TO SCALE

EQUIPMENT LEGEND:

- EXISTING
- TO BE RELOCATED/REMOVED
- NEW

MOUNT ANALYSIS NOTES:

1. THE DESIGN DEPICTED IN THESE DRAWINGS IS VALID WHEN ACCOMPANIED BY A CORRESPONDING PASSING MOUNT ANALYSIS.
2. CONSTRUCTION MANAGER / GENERAL CONTRACTOR SHALL REVIEW THE MOUNT ANALYSIS FOR ANY CONDITIONS PRIOR TO INSTALLATION.
3. ANY REQUIRED MOUNT MODIFICATION DESIGN OR MOUNT REPLACEMENT SHALL BE APPROVED BY EOR.

INSTALLER NOTE:

NO PROPOSED LOADING TO BE ADDED UNTIL MOUNT SWAP IS COMPLETE. CONTRACTOR TO INSTALL MOUNT PER MANUFACTURER'S SPECIFICATIONS.

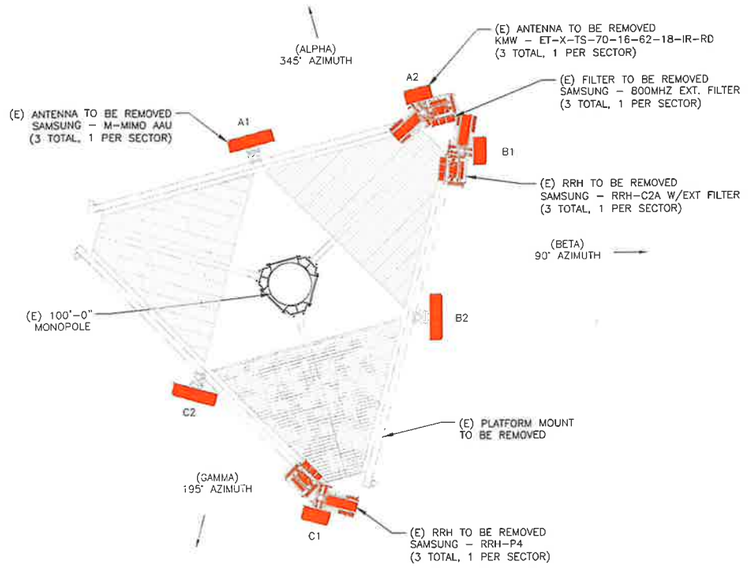

2 EXISTING ANTENNA PLAN
SCALE: NOT TO SCALE

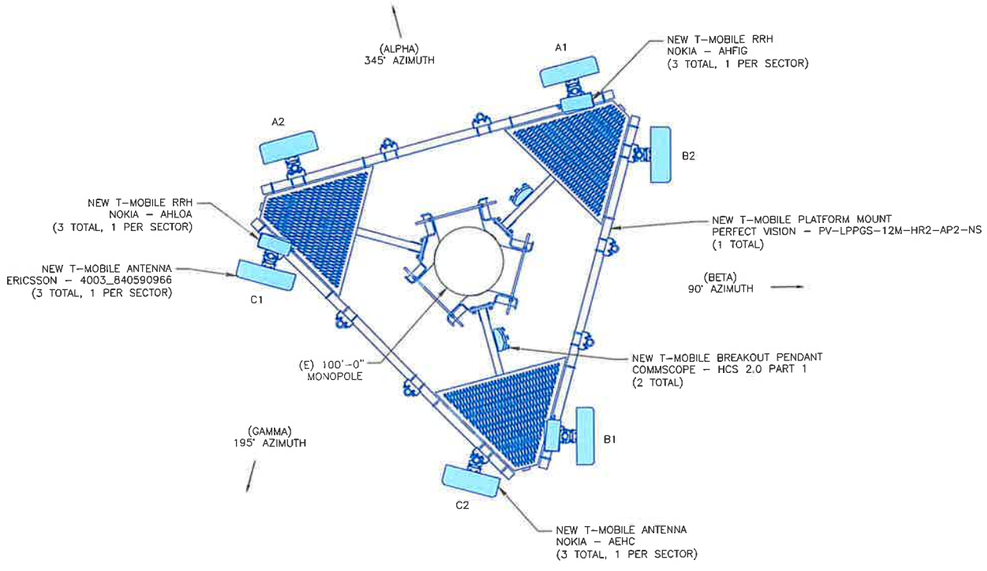

3 FINAL ANTENNA PLAN
SCALE: NOT TO SCALE

T-Mobile
8550 W. BRYN MAWR AVE, SUITE 100
CHICAGO, IL 60631

CROWN CASTLE
3025 HIGHLAND PKWY, SUITE 510,
DOWNERS GROVE, IL, 60515

POD
POWER OF DESIGN
11490 BLUEGRASS PKWY
LOUISVILLE, KY 40299
502-437-5252

T-MOBILE SITE NUMBER:
CH80545A

BU #: **875515**
180 ANETS

180 NORTH ANETS DRIVE
NORTHBROOK, IL 60062

EXISTING 100'-0" MONOPOLE

ISSUED FOR:

REV	DATE	DRWN	DESCRIPTION	DES /QA
0	6/21/2023	AS	CONSTRUCTION	NLP

MARK PATTERSON
062-067337
LICENSED PROFESSIONAL ENGINEER
STATE OF ILLINOIS
06/21/2023
EXPIRES: 11/30/2023

IT IS A VIOLATION OF LAW FOR ANY PERSON, UNLESS THEY ARE ACTING UNDER THE DIRECTION OF A LICENSED PROFESSIONAL ENGINEER, TO ALTER THIS DOCUMENT.

SHEET NUMBER: C-2
REVISION: 0

DigiSigner Document ID: d0dff10a-7aee-48fd-85bf-5ed21f60df6e

INSTALLER NOTES:

1. COMPLY WITH MANUFACTURERS INSTRUCTIONS TO ENSURE THAT ALL RRHs RECEIVE ELECTRICAL POWER WITHIN 24 HOURS OF BEING REMOVED FROM THE MANUFACTURER'S PACKAGING.
2. DO NOT OPEN RRH PACKAGES IN THE RAIN.
3. ALL PIPES, BRACKETS, AND MISCELLANEOUS HARDWARE TO BE GALVANIZED UNLESS NOTED OTHERWISE.

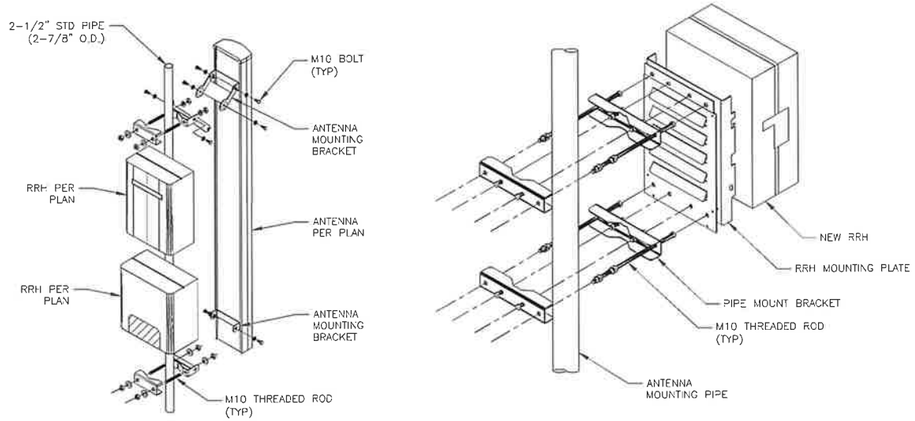

1 ANTENNA WITH RRHs MOUNTING DETAIL
SCALE: NOT TO SCALE

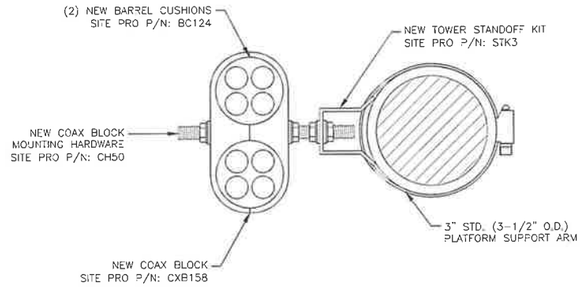

2 RF JUMPER DETAIL
SCALE: NOT TO SCALE

INSTALLER NOTE:

JUMPERS TO BE TORQUED TO 221.27 IN/LBS

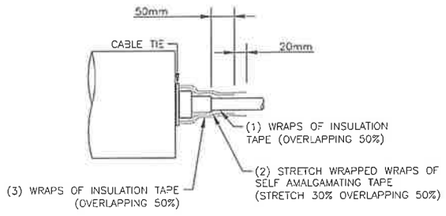

3 RF JUMPER CONNECTION
SCALE: NOT TO SCALE

4 NOT USED
SCALE: NOT TO SCALE

Coax Color Coding

- Antennas will be labeled "back of antenna" (BOA) per table #1. Azimuths (direction) from will be identified by cable color and by number of bands around the cable jacket.

SECTOR A	RED
SECTOR B	GREEN
SECTOR C	BLUE
SECTOR D	YELLOW
SECTOR E	WHITE
SECTOR F	PURPLE
LMU	BROWN - SECTOR COLOR BANDS (1 & 2)
FIBER ID	GRAY
UNUSED COAX	PINK
MICROWAVE	ORANGE
DWE T-1'S + GPS DOWNLINK CABLE	ID W/LABEL MAKER

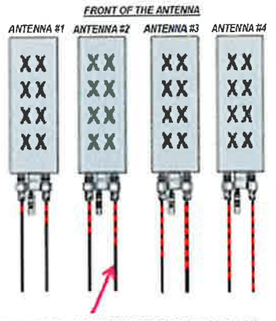

EXAMPLE: COAX WITH FOUR BANDS OF RED TAPE WILL REPRESENT ALPHA SECTOR AND THE 4TH PORT OF ANTENNA

COLOR CODING NOTES:

color	GSM
color	UMTS 1900
color	UMTS AWS
color	LTE
color	FIBER CABLE

METALLIC TAG NOTES:

1. TWO METALLIC TAGS SHALL BE ATTACHED AT EACH END OF EVERY CABLE LONGER THAN (3) THREE FEET
2. CABLE LESS THAN (3) THREE FEET WILL HAVE TWO METALLIC TAGS ATTACHED AT THE CENTER OF THE CABLE.
3. TAGS WILL BE FASTENED WITH STAINLESS STEEL ZIP TIES APPROPRIATE FOR CABLE DIAMETER.
4. STANDARDIZED METALLIC TAG KIT WILL BE ASSEMBLED WITH TAGS ALREADY ENGRAVED TO ACCOMMODATE ALL CONFIGURATIONS.



ANTENNA AND COAXIAL CABLE SCHEDULE

1. ALL ANTENNAS SHALL BE FURNISHED WITH DOWNTILT BRACKETS. CONTRACTOR SHALL COORDINATE REQUIRED MECHANICAL DOWNTILT FOR EACH ANTENNA WITH RF ENGINEER. ANTENNA DOWNTILT SHALL BE SET AND VERIFIED BY A SMART LEVEL.
2. CONTRACTOR SHALL INSTALL COLOR CODE RINGS ON EACH OF THE HYBRID CABLES AND JUMPER CABLES WITH UV RESISTANT TAPE. ALL CABLE SHALL BE MARKED AT TOP AND BOTTOM WITH 2" COLOR TAPE OR STENCIL TAG. COLOR TAPE MAY BE OBTAINED FROM GRAYBAR ELECTRONICS.

5 COAX COLOR CODING
SCALE: NOT TO SCALE

T-Mobile
8550 W. BRYN MAWR AVE, SUITE 100
CHICAGO, IL 60631

CROWN CASTLE
3025 HIGHLAND PKWY, SUITE 510,
DOWNERS GROVE, IL, 60515

POD
POWER OF DESIGN
11490 BLUEGRASS PKWY
LOUISVILLE, KY 40299
502-437-5252

T-MOBILE SITE NUMBER:
CH80545A

BU #: **875515**
180 ANETS

180 NORTH ANETS DRIVE
NORTHBROOK, IL 60062

EXISTING 100'-0" MONOPOLE

ISSUED FOR:

REV	DATE	DRWN	DESCRIPTION	DES/QA
0	6/21/2023	AS	CONSTRUCTION	MLP

MARK L. PATTERSON
062-067337
LICENSED
PROFESSIONAL
ENGINEER
STATE OF ILLINOIS
06/21/2023
EXPIRES: 11/30/2023

IT IS A VIOLATION OF LAW FOR ANY PERSON, UNLESS THEY ARE ACTING UNDER THE DIRECTION OF A LICENSED PROFESSIONAL ENGINEER, TO ALTER THIS DOCUMENT.

SHEET NUMBER: C-3
REVISION: 0

DigiSigner Document ID: d0dff40a-7aee-40fd-85bf-5ed21f60df6e

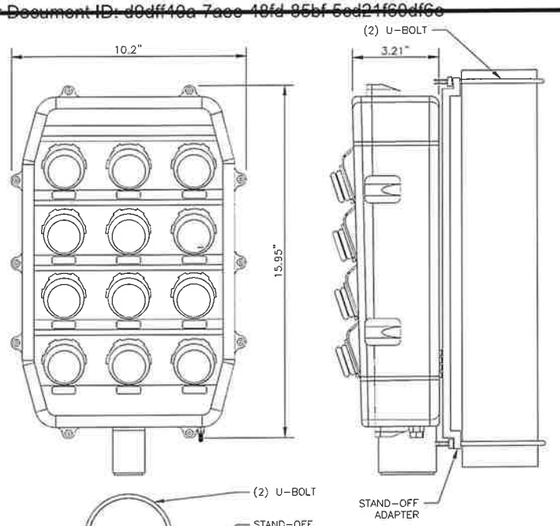

1 HCS 2.0 PENDANT DETAIL
SCALE: NOT TO SCALE

MANUFACTURER:	COMMSCOPE
MODEL:	FE-16148-OVP-B12
DIMENSIONS (HxWxD):	14"x16"x8"
WEIGHT:	15.2 LBS

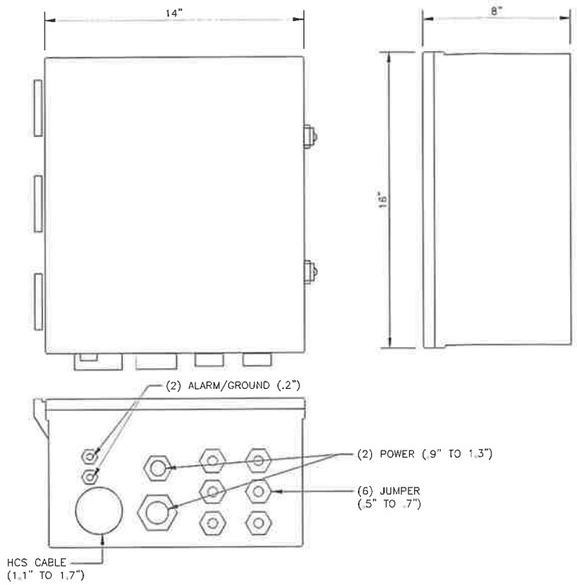

2 HI-CAP JUNCTION BOX DETAIL
SCALE: NOT TO SCALE

MANUFACTURER:	NOKIA
MODEL:	AEHC
DIMENSIONS (HxWxD):	37.95"x21.42"x5.91"
WEIGHT:	108 LBS
BAND:	B41/n41
MOUNTING KIT:	AMPF (475188A) (NOT INCLUDED)

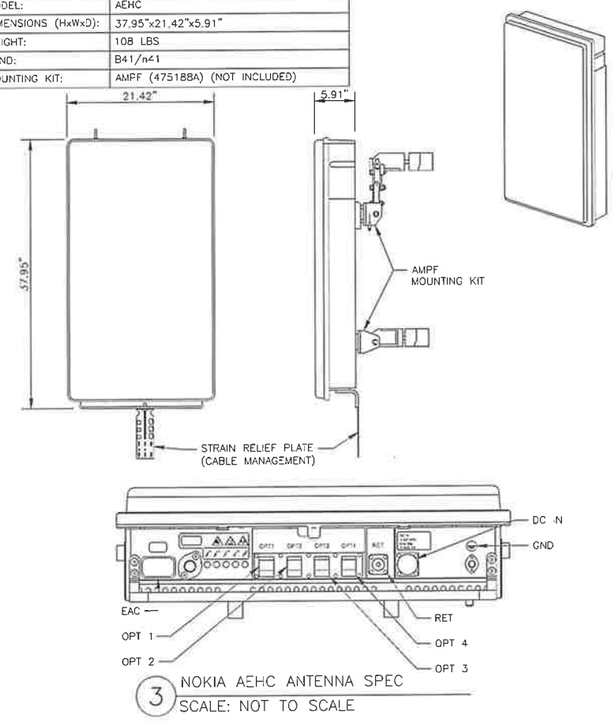

3 NOKIA AEHC ANTENNA SPEC
SCALE: NOT TO SCALE

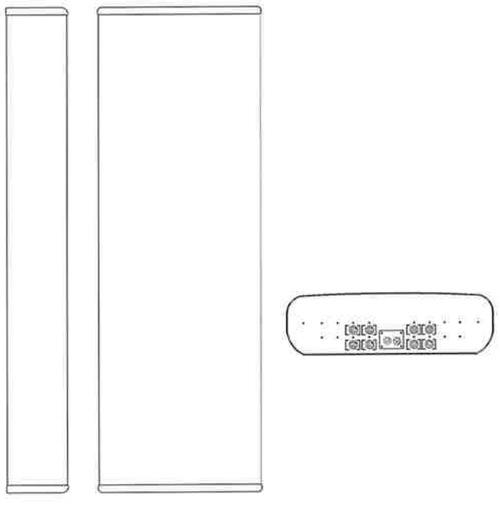

ERICSSON – 4003_840590966
WEIGHT (WITHOUT MOUNTING HARDWARE): 135.8 LBS
SIZE (HxWxD): 95.9x23.5x7.1 IN.

4 ERICSSON –4003_840590966
SCALE: NOT TO SCALE

MANUFACTURER:	NOKIA
MODEL:	AHFIG
DIMENSIONS (HxWxD):	28.7"x12.9"x5.6"
WEIGHT:	70.5 LBS

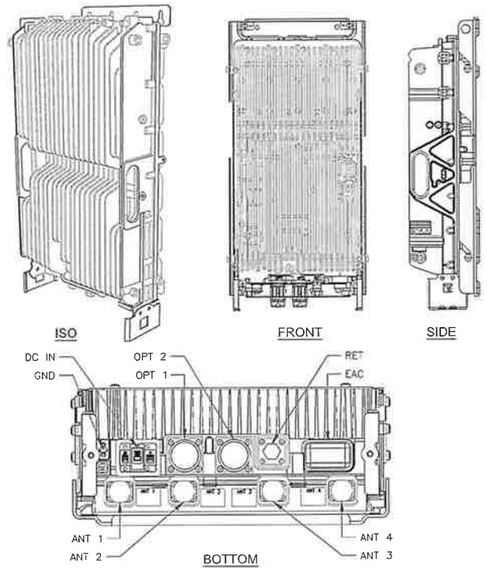

5 NOKIA AHFIG RRH
SCALE: NOT TO SCALE

MANUFACTURER:	NOKIA
MODEL:	AHLOA
DIMENSIONS (HxWxD):	22.1"x12.1"x7.4"
WEIGHT:	83.5 LBS

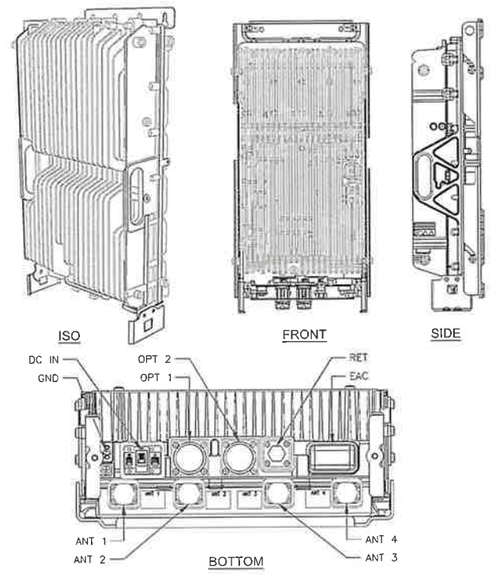

6 NOKIA AHLOA RRH
SCALE: NOT TO SCALE

T-Mobile
8550 W. BRYN MAWR AVE, SUITE 100
CHICAGO, IL 60631

CROWN CASTLE
3025 HIGHLAND PKWY, SUITE 510,
DOWNERS GROVE, IL, 60515

POD
POWER OF DESIGN
11490 BLUEGRASS PKWY
LOUISVILLE, KY 40299
502-437-5252

T-MOBILE SITE NUMBER:
CH80545A

BU #: **875515**
180 ANETS

180 NORTH ANETS DRIVE
NORTHBROOK, IL 60062

EXISTING 100'-0" MONOPOLE

ISSUED FOR:

REV	DATE	DRWN	DESCRIPTION	DES/QA
0	6/21/2023	AS	CONSTRUCTION	MEP

MARK J. PATTERSON
062-067337
LICENSED PROFESSIONAL ENGINEER
STATE OF ILLINOIS
06/21/2023
EXPIRIES: 11/30/2023

IT IS A VIOLATION OF LAW FOR ANY PERSON, UNLESS THEY ARE ACTING UNDER THE DIRECTION OF A LICENSED PROFESSIONAL ENGINEER, TO ALTER THIS DOCUMENT.

SHEET NUMBER: C-4
REVISION: 0

DigiSigner Document ID: d0dff10e-7aee-48fd-85bf-5ed21f60df6e

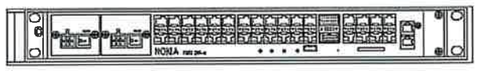

NOKIA – CSR IXRE V2 ROUTER
WEIGHT: 11.2 LBS
SIZE (HxWxD): 1.25 x 17.25 x 10.0 IN.

1 NOKIA – CSR IXRE V2 ROUTER
SCALE: NOT TO SCALE

The general specifications for the PSU 48 13 are as follows:

Electrical Operating Limits	
Input Voltage	-38.0 – -58.5 VDC
Input Voltage, nominal	-48 VDC
Input Current, max	166 A; 30 A total for all four -48V inputs
Output Voltage, fixed	-58 VDC
Output Power, max.	2000 watts each
Environmental Operating Limits	
Temperature, operation	-40 – +80 °C
Temperature, storage	-40 – +55 °C
Temperature, trasport	-40 – +70 °C
Humidity, operation and storage	5% – 95%
Altitude, operation and storage	0 – 4000 m
Cooling	Internal fans
Vibration	ETS300019-2
Shock	ETS300019-2
Drop	ETS300019-2
EMC	FCC Part 15
Safety	UL 62368-1
Noise	< 6.8 bel sound power
Lightning Protection	4 kA; 10/350 µs; 20 kA, 8/20 µs
Fuse Options	30 A, 40 A, 50 A
Mechanical Specification	
Weight	< 7.8 kg (17.2 lb)
Dimensions (H x W x D)	44 x 483 x 363 mm (1.7" x 19.0" x 14.3") (include brackets, cover)

PSU 48 13



2 VOLTAGE BOOSTER – PSU 4813
SCALE: NOT TO SCALE

3 NOT USED
SCALE: NOT TO SCALE

4 NOT USED
SCALE: NOT TO SCALE

5 NOT USED
SCALE: NOT TO SCALE

6 NOT USED
SCALE: NOT TO SCALE

T-Mobile

8550 W. BRYN MAWR AVE, SUITE 100
CHICAGO, IL 60631

CROWN CASTLE

3025 HIGHLAND PKWY, SUITE 510,
DOWNERS GROVE, IL, 60515

POD
POWER OF DESIGN

11490 BLUEGRASS PKWY
LOUISVILLE, KY 40299
502-437-5252

T-MOBILE SITE NUMBER:
CH80545A

BU #: **875515**
180 ANETS

180 NORTH ANETS DRIVE
NORTHBROOK, IL 60062

EXISTING 100'-0" MONOPOLE

ISSUED FOR:

REV	DATE	DRWN	DESCRIPTION	DES /QA
0	6/21/2023	AS	CONSTRUCTION	MEP

MARK PATTERSON
062-067337
LICENSED
PROFESSIONAL
ENGINEER
STATE OF ILLINOIS
06/21/2023
EXPIRIES: 11/30/2023

IT IS A VIOLATION OF LAW FOR ANY PERSON, UNLESS THEY ARE ACTING UNDER THE DIRECTION OF A LICENSED PROFESSIONAL ENGINEER, TO ALTER THIS DOCUMENT.

SHEET NUMBER: C-5
REVISION: 0

DigiSigner Document ID: d0dff10a-7aee-48fd-85bf-5ed21f60df6e

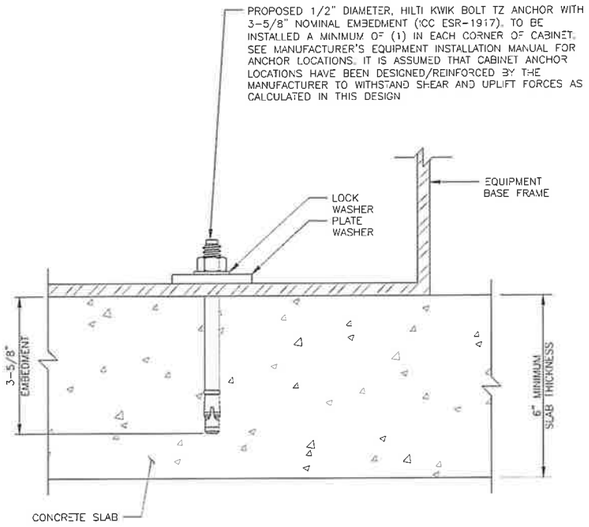

1 TYPICAL ANCHOR BOLT DETAIL
SCALE: NOT TO SCALE

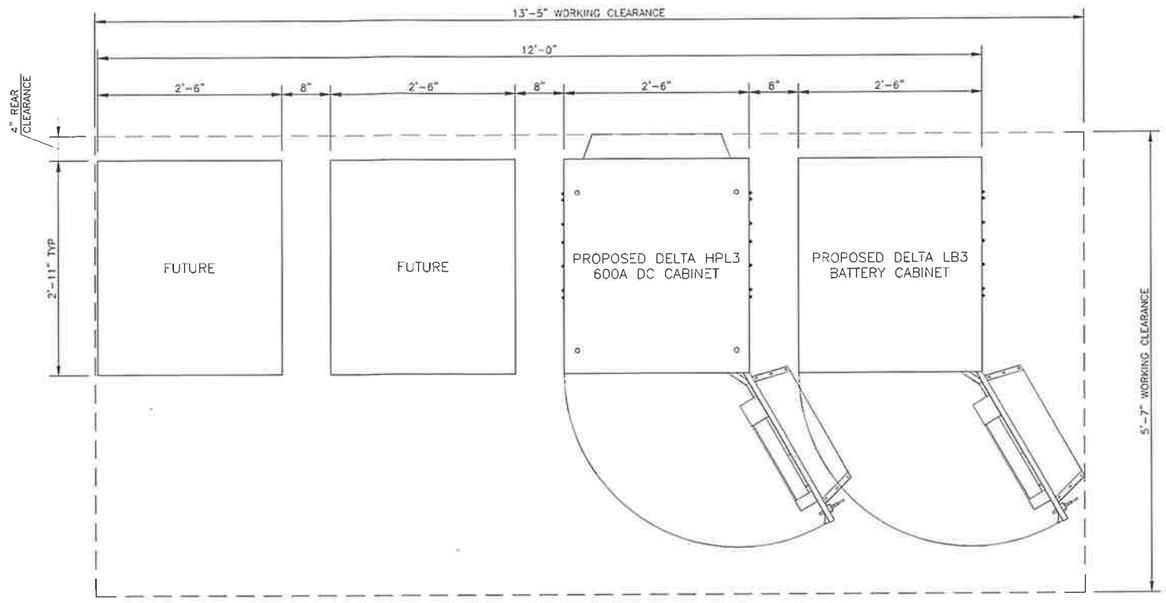

PLAN VIEW

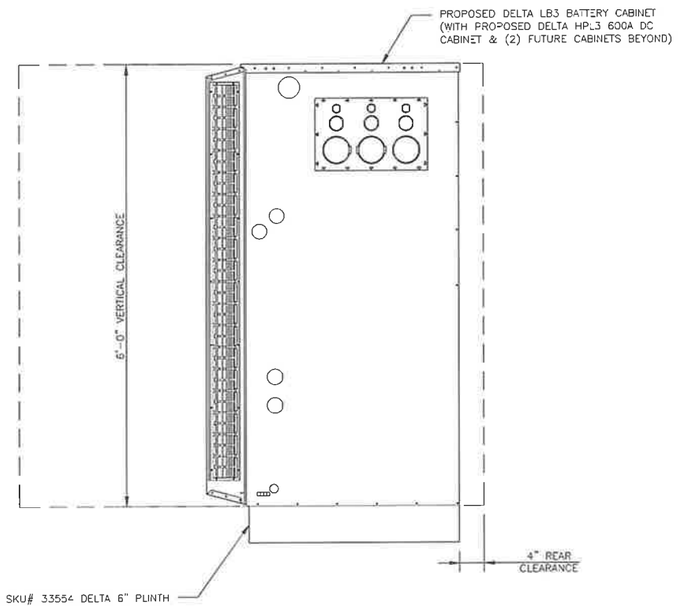

SIDE VIEW

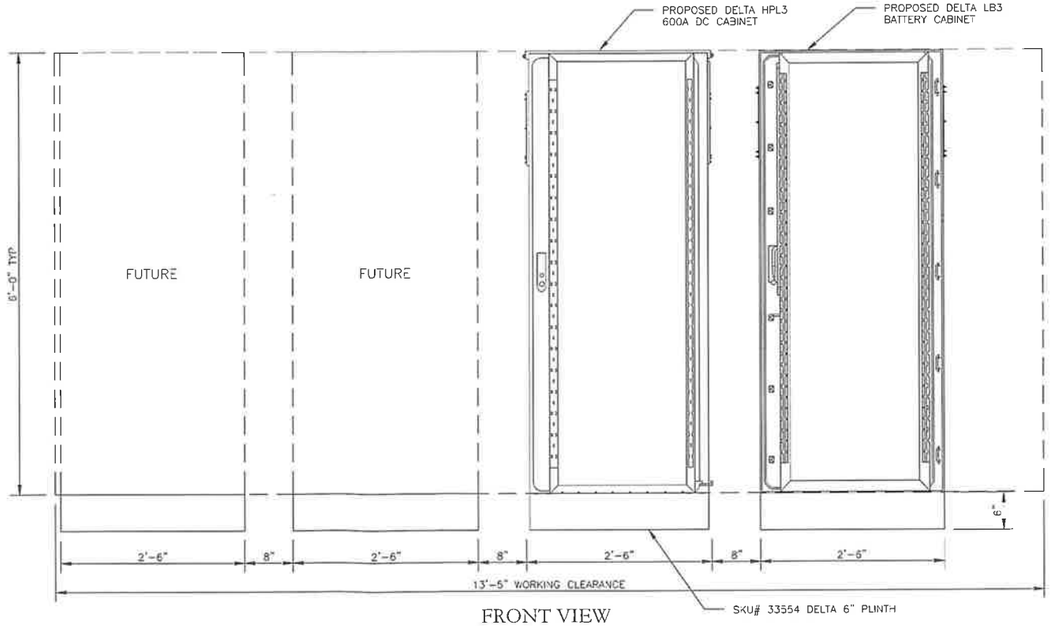

FRONT VIEW

2 DELTA HPL3 SITE SUPPORT CABINET AND LB3 LAYOUT
SCALE: NOT TO SCALE

THESE SPECIFICATIONS WERE PROVIDED BY OTHERS, POD DID NOT PREPARE THESE DETAILS

T-Mobile
8550 W. BRYN MAWR AVE, SUITE 100
CHICAGO, IL 60631

CROWN CASTLE
3025 HIGHLAND PKWY, SUITE 510,
DOWNERS GROVE, IL, 60515

POD
POWER OF DESIGN
11490 BLUEGRASS PKWY
LOUISVILLE, KY 40299
502-437-5252

T-MOBILE SITE NUMBER:
CH80545A

BU #: **875515**
180 ANETS

180 NORTH ANETS DRIVE
NORTHBROOK, IL 60062

EXISTING 100'-0" MONOPOLE

ISSUED FOR:

REV	DATE	DRWN	DESCRIPTION	DES /QA
0	6/21/2023	AS	CONSTRUCTION	MEP

MARK PATTERSON
062-067337
LICENSED PROFESSIONAL ENGINEER
STATE OF ILLINOIS
06/21/2023
EXPIRES: 11/30/2023

IT IS A VIOLATION OF LAW FOR ANY PERSON, UNLESS THEY ARE ACTING UNDER THE DIRECTION OF A LICENSED PROFESSIONAL ENGINEER, TO ALTER THIS DOCUMENT.

SHEET NUMBER:	REVISION:
C-6	0

DigiSigner Document ID: d0dff10a-7aee-48fd-85bf-5ed21f60df6e

MANUFACTURER:	DELTA
MODEL:	HPL3 SITE SUPPORT CABINET
DIMENSIONS:	72" x 30" x 35" (H x W x D)
WEIGHT:	551 LBS (WITHOUT EQUIPMENT)

NOTE:
- CORRECT KNOCKOUT TOOL REQUIRED FOR PUNCHING KNOCKOUTS. DO NOT DRILL THROUGH KNOCKOUTS
- CONDUIT MUST BE PROPERLY SECURED TO PREVENT DAMAGE TO CABINETS AND/OR CABLING

RACK ASSIGNMENT		
RU SLOT	DESCRIPTION	DESCRIPTION
1	RAYCAP BOOSTER #1	CSR - SAR/SAS
2	RAYCAP BOOSTER #2	
3	AIRSCALE #1	
4		
5		
6	FIBER MUX #1	
	FIBER MUX #2	
7	AIRSCALE #2	
8		
9		
10	FIBER MUX #1	
	FIBER MUX #2	
11	AIRSCALE #3	
12		
13		
14	FIBER MUX #1	
	FIBER MUX #2	
15	FUTURE EQUIPMENT	
16		
17		
18		
19		
20		
21	LEGACY BB #2	
22		
23		
24	LEGACY BB #1	
25		
26		
27	FSEE ON FMAB	

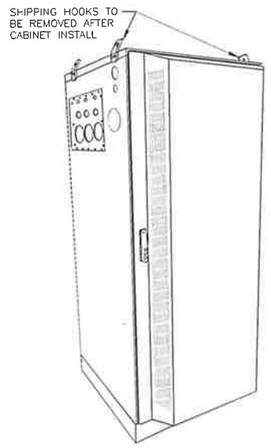

ISOMETRIC

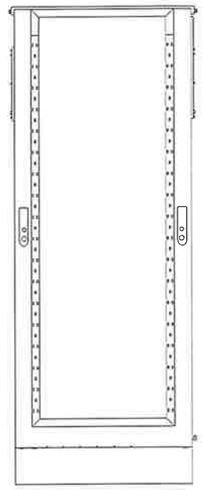
REAR VIEW

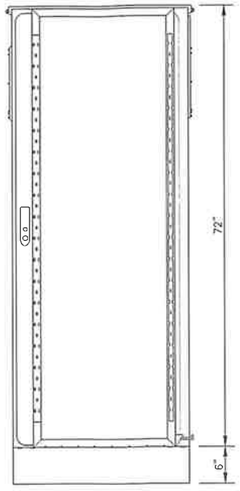

FRONT VIEW

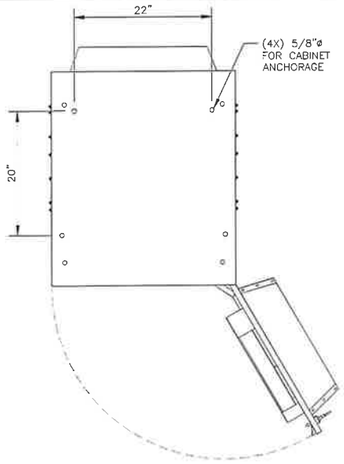

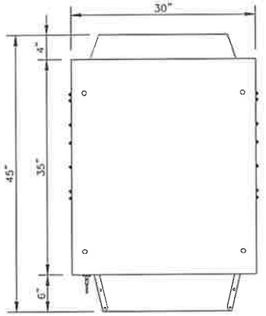

PLAN VIEW

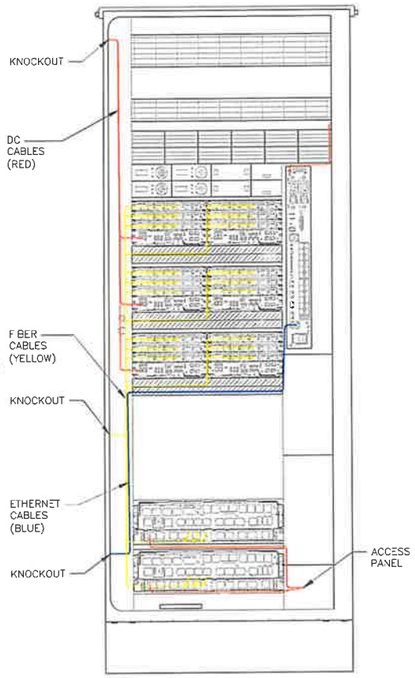

INTERNAL ROUTING

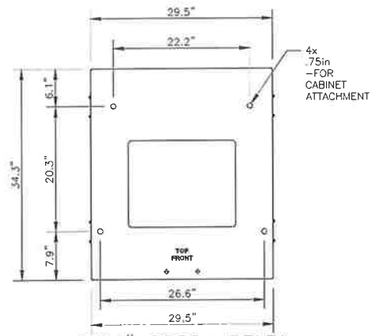

SKU# 33554 DELTA 6IN PLINTH PLAN VIEW

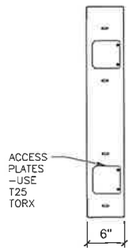

SKU# 33554 DELTA 6IN PLINTH SIDE VIEW

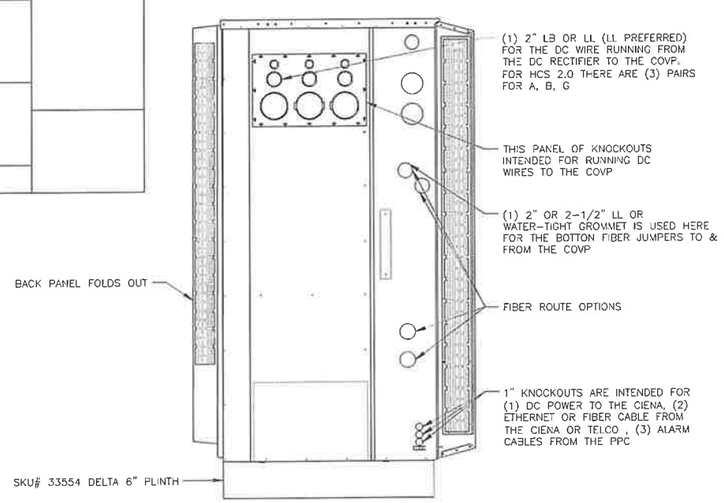

LEFT VIEW

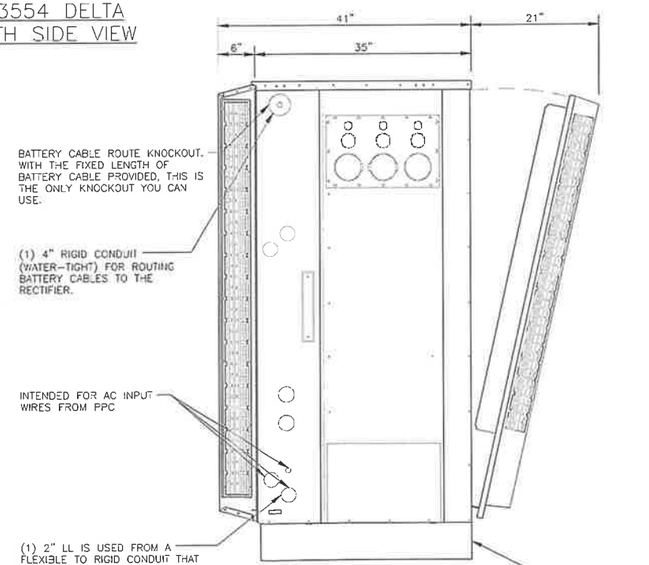

RIGHT VIEW

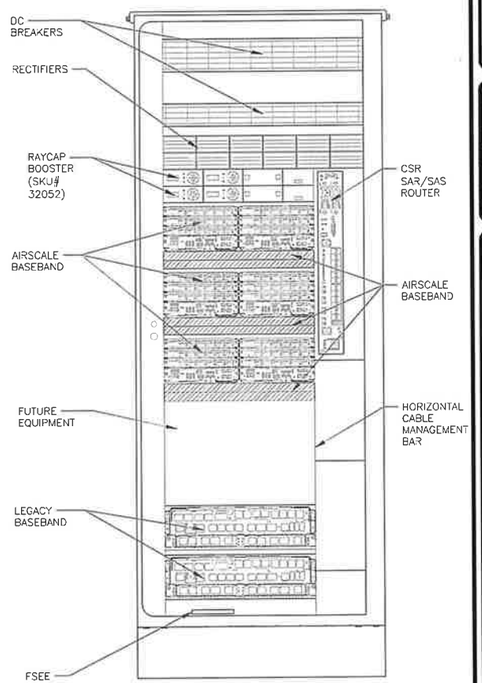

FRONT VIEW (OPEN)

1 DELTA HPL3 SITE SUPPORT CABINET
SCALE: NOT TO SCALE

THESE SPECIFICATIONS WERE PROVIDED BY OTHERS, POD DID NOT PREPARE THESE DETAILS

T-Mobile
8550 W. BRYN MAWR AVE, SUITE 100
CHICAGO, IL 60631

CROWN CASTLE
3025 HIGHLAND PKWY, SUITE 510,
DOWNERS GROVE, IL, 60515

POD
POWER OF DESIGN
11490 BLUEGRASS PKWY
LOUISVILLE, KY 40299
502-437-5252

T-MOBILE SITE NUMBER:
CH80545A

BU #: **875515**
180 ANETS

180 NORTH ANETS DRIVE
NORTHBROOK, IL 60062

EXISTING 100'-0" MONOPOLE

ISSUED FOR:

REV	DATE	DRWN	DESCRIPTION	DES/QA
0	6/21/2023	AS	CONSTRUCTION	MLP

MARK PATTERSON
062-067337
LICENSED PROFESSIONAL ENGINEER
STATE OF ILLINOIS
06/21/2023
EXPIRIES: 11/30/2023

IT IS A VIOLATION OF LAW FOR ANY PERSON, UNLESS THEY ARE ACTING UNDER THE DIRECTION OF A LICENSED PROFESSIONAL ENGINEER, TO ALTER THIS DOCUMENT.

SHEET NUMBER: C-7
REVISION: 0

DigiSigner Document ID: d0dff10a-7ace-48fd-85bf-5ed21f60df6e

MANUFACTURER:	DELTA
MODEL:	LB3 BATTERY SUPPORT CABINET
DIMENSIONS:	72" x 30" x 35" (H x W x D)
WEIGHT:	509 LBS (WITHOUT EQUIPMENT)

NOTE:
- CORRECT KNOCKOUT TOOL REQUIRED FOR PUNCHING KNOCKOUTS. DO NOT DRILL THROUGH KNOCKOUTS
- CONDUIT MUST BE PROPERLY SECURED TO PREVENT DAMAGE TO CABINETS AND/OR CABLING

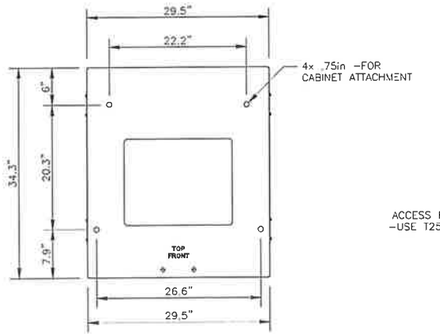

SKU# 33554 DELTA 6in PLINTH PLAN VIEW

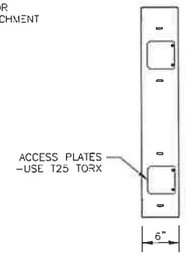

SKU# 33554 DELTA 6IN PLINTH SIDE VIEW

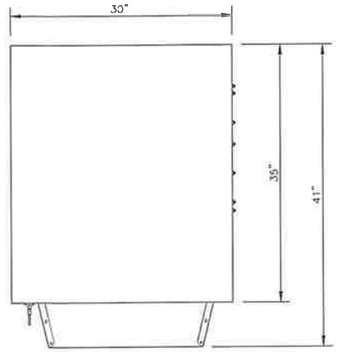

PLAN VIEW

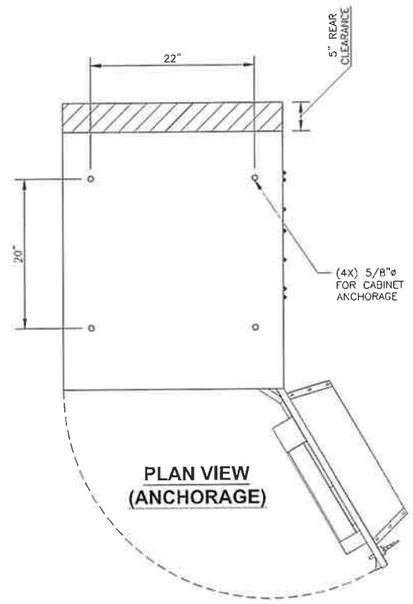

PLAN VIEW (ANCHORAGE)

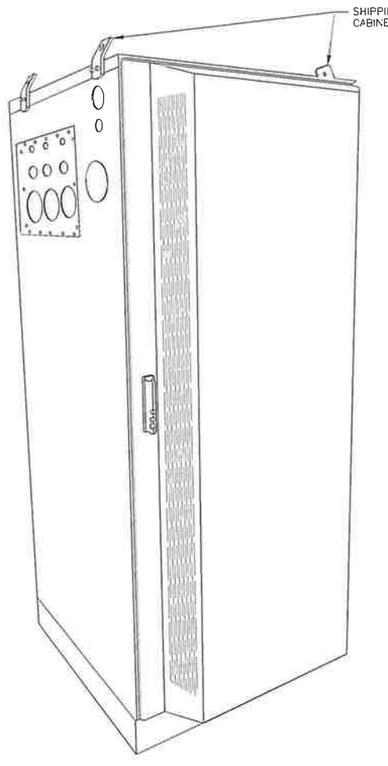

ISO VIEW N.T.S.

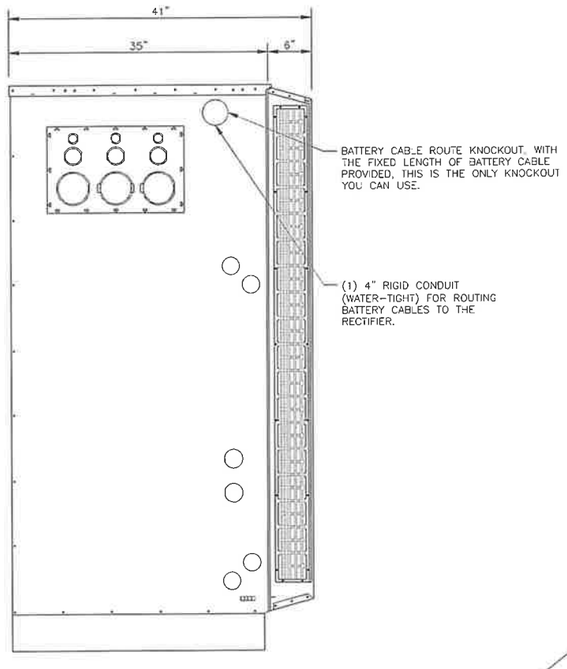

LEFT VIEW

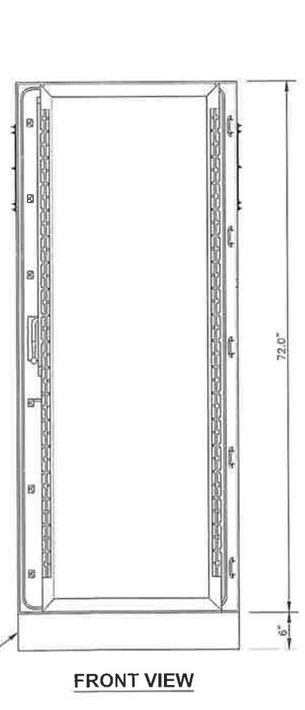

FRONT VIEW

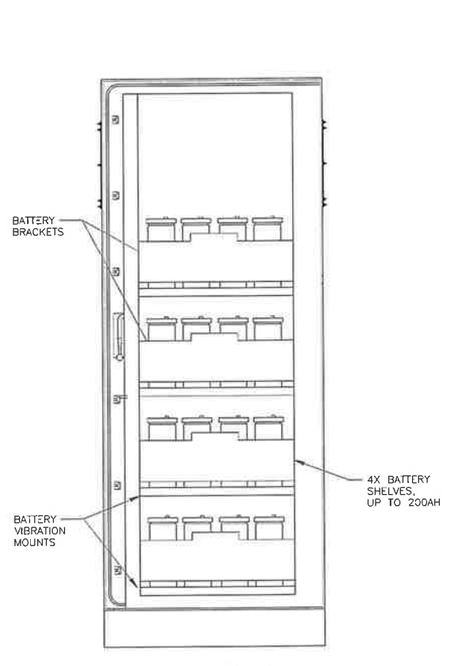

FRONT VIEW (OPEN)

1 LB3 DELTA BATTERY SUPPORT CABINET
SCALE: NOT TO SCALE

THESE SPECIFICATIONS WERE PROVIDED BY OTHERS, POD DID NOT PREPARE THESE DETAILS

T-Mobile
8550 W. BRYN MAWR AVE, SUITE 100
CHICAGO, IL 60631

CROWN CASTLE
3025 HIGHLAND PKWY, SUITE 510,
DOWNERS GROVE, IL, 60515

POD
POWER OF DESIGN
11490 BLUEGRASS PKWY
LOUISVILLE, KY 40299
502-437-5252

T-MOBILE SITE NUMBER:
CH80545A

BU #: **875515**
180 ANETS

180 NORTH ANETS DRIVE
NORTHBROOK, IL 60062

EXISTING 100'-0" MONOPOLE

ISSUED FOR:

REV	DATE	DRWN	DESCRIPTION	DES /QA
0	6/21/2023	AS	CONSTRUCTION	MEP

MARK E. PATTERSON
062-067337
LICENSED PROFESSIONAL ENGINEER
STATE OF ILLINOIS
06/21/2023
EXPIRES: 11/30/2023

IT IS A VIOLATION OF LAW FOR ANY PERSON, UNLESS THEY ARE ACTING UNDER THE DIRECTION OF A LICENSED PROFESSIONAL ENGINEER, TO ALTER THIS DOCUMENT.

SHEET NUMBER: C-8
REVISION: 0

DigiSigner Document ID: d0dff40a-7aee-48fd-85bf-5ed21f60df6e

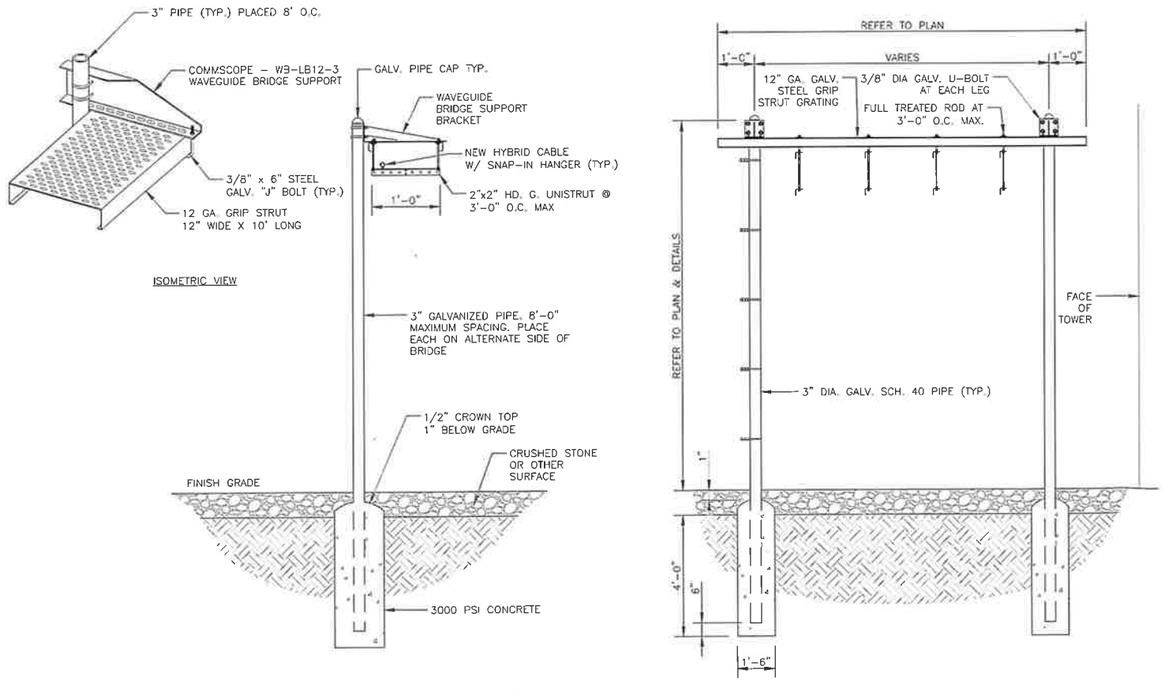

1 ICE BRIDGE DETAIL
SCALE: NOT TO SCALE

2 NOT USED
SCALE: NOT TO SCALE

T-Mobile

8550 W. BRYN MAWR AVE, SUITE 100
CHICAGO, IL 60631

CROWN CASTLE

3025 HIGHLAND PKWY, SUITE 510,
DOWNERS GROVE, IL, 60515

POD
POWER OF DESIGN

11490 BLUEGRASS PKWY
LOUISVILLE, KY 40299
502-437-5252

T-MOBILE SITE NUMBER:
CH80545A

BU #: **875515**
180 ANETS

180 NORTH ANETS DRIVE
NORTHBROOK, IL 60062

EXISTING 100'-0" MONOPOLE

ISSUED FOR:

REV	DATE	DRWN	DESCRIPTION	DES./QA
0	6/21/2023	AS	CONSTRUCTION	MEP

MARK A. PATTERSON
062-067337
LICENSED PROFESSIONAL ENGINEER
STATE OF ILLINOIS
06/21/2023
EXPIRES: 11/30/2023

IT IS A VIOLATION OF LAW FOR ANY PERSON, UNLESS THEY ARE ACTING UNDER THE DIRECTION OF A LICENSED PROFESSIONAL ENGINEER, TO ALTER THIS DOCUMENT.

SHEET NUMBER: C-9
REVISION: 0

DigiSigner Document ID: d0dff10a-7aee-48fd-85bf-5ed21f60df6e

T-MOBILE PANEL SCHEDULE

MAIN: 200 AMP MAIN BREAKER			**VOLTAGE/PHASE:** 120/240V, 1-PHASE, 3-WIRE						**SHORT CIRCUIT CURRENT RATING:** N/A		
MOUNTING: INSIDE PPC ENCLOSURE			**ENCLOSURE:** NEMA 3R						**SURGE PROTECTION DEVICE:** YES		
DESCRIPTION	LOAD (VA)	C or NC	C/B	CIR No.	LOAD (VA) A-PHASE	LOAD (VA) B-PHASE	CIR No.	C/B	C or NC	LOAD (VA)	DESCRIPTION
2.5 GROWTH	4800	C	100	1	4830		2	60	C	30	SURGE PROTECTION DEVICE
	4800	C		3		4830	4		C	30	
MMBS BATT	720	C	15	5	5520		6	100	C	4800	MMBS
	720	C		7		5520	8		C	4800	
FAN	60	C	10	9	240		10	15	C	180	GFCI
CIENA	720	C	15	11		720	12				
BASE LOAD (VA) =					10590	11070	C = CONTINUOUS LOAD; NC = NON-CONTINUOUS LOAD				
25% OF CONTINUOUS LOAD (VA) =					2648	2768	** INDICATES NEW LOAD. ALL OTHER LOADS ARE EXISTING. NEW BREAKER TO BE SAME TYPE AND HAVE SAME AIC RATING AS EXISTING. CUSTOMER HAS NOT PROVIDED LOADS SHOWN ARE ESTIMATED VALUES				
TOTAL LOAD (VA) =					13238	13838					
TOTAL LOAD (A) =					111	116					

1 EXISTING PANEL SCHEDULE
SCALE: NOT TO SCALE

T-MOBILE PANEL SCHEDULE

MAIN: 200 AMP MAIN BREAKER			**VOLTAGE/PHASE:** 120/240V, 1-PHASE, 3-WIRE						**SHORT CIRCUIT CURRENT RATING:** N/A		
MOUNTING: INSIDE PPC ENCLOSURE			**ENCLOSURE:** NEMA 3R						**SURGE PROTECTION DEVICE:** YES		
DESCRIPTION	LOAD (VA)	C or NC	C/B	CIR No.	LOAD (VA) A-PHASE	LOAD (VA) B-PHASE	CIR No.	C/B	C or NC	LOAD (VA)	DESCRIPTION
2.5 GROWTH	4800	C	100	1	4830		2	60	C	30	SURGE PROTECTION DEVICE
	4800	C		3		4830	4		C	30	
MMBS BATT	720	C	15	5	5520		6	100	C	4800	MMBS
	720	C		7		5520	8		C	4800	
FAN	60	C	10	9	240		10	15	C	180	GFCI
CIENA	720	C	15	11		11720	12	200	C	11000	**DELTA SSC CABINET
				13	11180		14		C	11180	
				15		0	16		C		
				17	0		18		C		
				19		0	20				
				21	0		22				
				23		0	24				
BASE LOAD (VA) =					21770	22070	C = CONTINUOUS LOAD; NC = NON-CONTINUOUS LOAD				
25% OF CONTINUOUS LOAD (VA) =					5443	5518	** INDICATES NEW LOAD. ALL OTHER LOADS ARE EXISTING. NEW BREAKER TO BE SAME TYPE AND HAVE SAME AIC RATING AS EXISTING. CUSTOMER HAS NOT PROVIDED LOADS SHOWN ARE ESTIMATED VALUES				
TOTAL LOAD (VA) =					27213	27588					
TOTAL LOAD (A) =					227	230					

2 FINAL PANEL SCHEDULE
SCALE: NOT TO SCALE

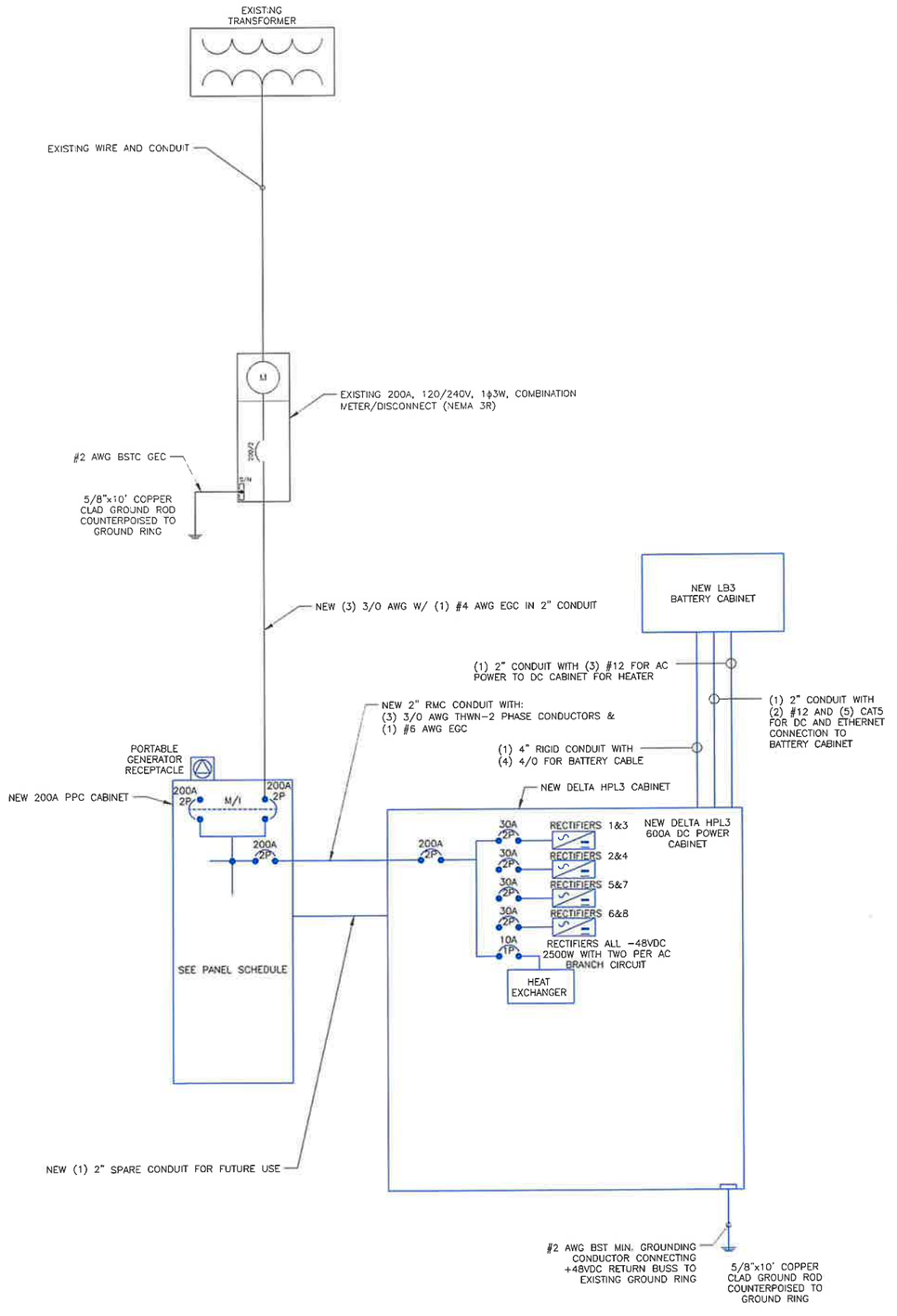

3 ONE-LINE DIAGRAM
SCALE: NOT TO SCALE

T-Mobile
8550 W. BRYN MAWR AVE, SUITE 100
CHICAGO, IL 60631

CROWN CASTLE
3025 HIGHLAND PKWY, SUITE 510,
DOWNERS GROVE, IL, 60515

POD
POWER OF DESIGN
11490 BLUEGRASS PKWY
LOUISVILLE, KY 40299
502-437-5252

T-MOBILE SITE NUMBER:
CH80545A

BU #: **875515**
180 ANETS

180 NORTH ANETS DRIVE
NORTHBROOK, IL 60062

EXISTING 100'-0" MONOPOLE

ISSUED FOR:

REV	DATE	DRWN	DESCRIPTION	DES/QA
0	6/21/2023	AS	CONSTRUCTION	MEP

MARK PATTERSON
062-067337
LICENSED PROFESSIONAL ENGINEER
STATE OF ILLINOIS
06/21/2023
EXPIRES: 11/30/2023

IT IS A VIOLATION OF LAW FOR ANY PERSON, UNLESS THEY ARE ACTING UNDER THE DIRECTION OF A LICENSED PROFESSIONAL ENGINEER, TO ALTER THIS DOCUMENT.

SHEET NUMBER: E-1
REVISION: 0

DigiSigner Document ID: d0dff40a-7ace-48fd-85bf-5ed21f60df6e

INSTALLER NOTES:

ALL METAL CONDUIT INSTALLED IN DIRECT CONTACT WITH THE EARTH SHALL BE CONSIDERED TO BE INSTALLED IN A SEVERELY CORROSIVE ENVIRONMENT AND IS REQUIRED TO HAVE SUPPLEMENTAL PROTECTION AGAINST CORROSION (NEC ARTICLE 342.10(B) & 344.10(B)(1)). THIS PROTECTION SHALL EITHER BE AN APPROVED MANUFACTURER INSTALLED PROTECTIVE COATING ON THE CONDUIT OR SHALL BE (2) LAYERS OF 10 MIL PVC PIPE WRAP TAPE INSTALLED USING OPPOSING SPIRAL WRAPS. ON VERTICAL PIPE THE OUTSIDE LAYER OF TAPE SHALL BE WRAPPED SO AS TO PROVIDE SHEDDING OF WATER (i.e. TAPE SHOULD WRAP IN AN UPWARD DIRECTION WITH LOWER WRAP BEING BENEATH THE WRAP ABOVE). SPIRAL WRAPS SHALL HAVE A MINIMUM OF 1/4" OVERLAP WITH THE PRECEDING TAPE WRAP. ANY OTHER METHODS OF CORROSION PROTECTION SHALL REQUIRE APPROVAL BY THE ENGINEER OF RECORD PRIOR TO BEING USED.

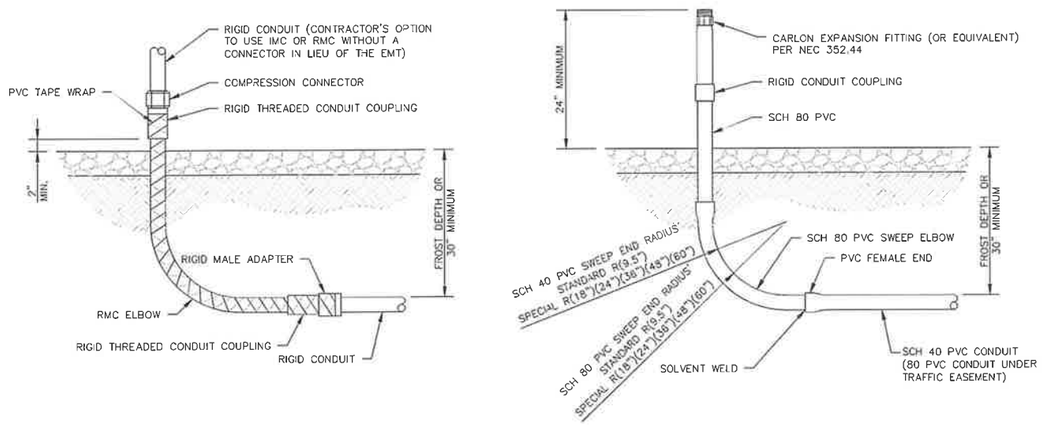

1 CONDUIT STUB UP DETAILS
SCALE: NOT TO SCALE

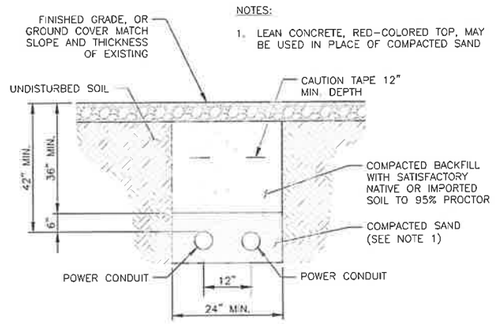

NOTES:
1. LEAN CONCRETE, RED-COLORED TOP, MAY BE USED IN PLACE OF COMPACTED SAND

2 TRENCH DETAIL
SCALE: NOT TO SCALE

T-Mobile
8550 W. BRYN MAWR AVE, SUITE 100
CHICAGO, IL 60631

CROWN CASTLE
3025 HIGHLAND PKWY, SUITE 510,
DOWNERS GROVE, IL, 60515

POD
POWER OF DESIGN
11490 BLUEGRASS PKWY
LOUISVILLE, KY 40299
502-437-5252

T-MOBILE SITE NUMBER:
CH80545A

BU #: **875515**
180 ANETS

180 NORTH ANETS DRIVE
NORTHBROOK, IL 60062

EXISTING 100'-0" MONOPOLE

ISSUED FOR:

REV	DATE	DRWN	DESCRIPTION	DES/QA
0	6/21/2023	AS	CONSTRUCTION	MEP

MARK PATTERSON
062-067337
LICENSED PROFESSIONAL ENGINEER
STATE OF ILLINOIS
06/21/2023
EXPIRIES: 11/30/2023

IT IS A VIOLATION OF LAW FOR ANY PERSON, UNLESS THEY ARE ACTING UNDER THE DIRECTION OF A LICENSED PROFESSIONAL ENGINEER, TO ALTER THIS DOCUMENT.

SHEET NUMBER: E-2
REVISION: 0

DigiSigner Document ID: d0dff40a-7ace-48fd-85bf-5ed21f60df6e

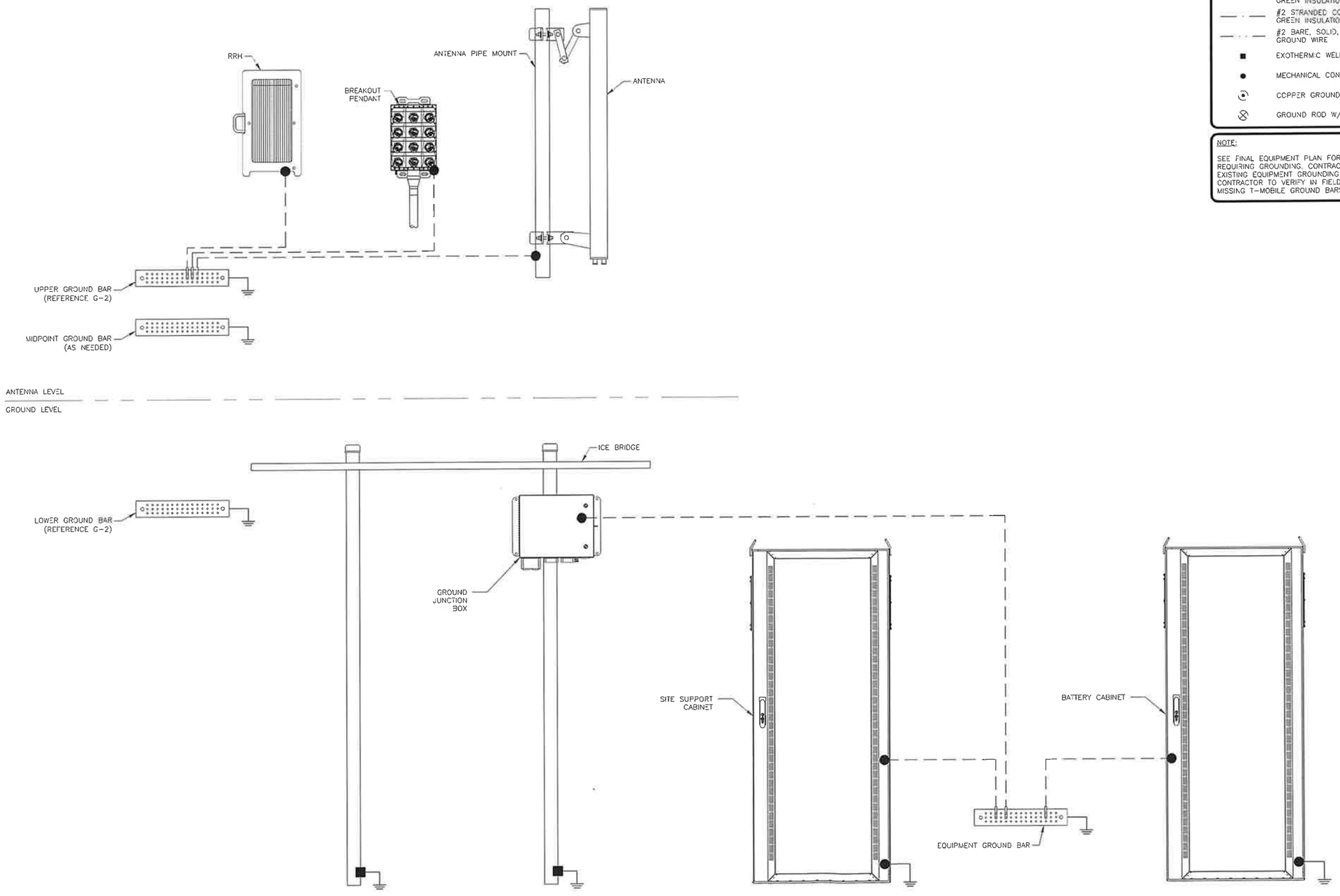

1 TYPICAL FINAL GROUNDING SCHEMATIC
SCALE: NOT TO SCALE

GROUNDING PLAN LEGEND:

- #6 STRANDED COPPER WITH GREEN INSULATION GROUND WIRE
- #2 STRANDED COPPER WITH GREEN INSULATION GROUND WIRE
- #2 BARE, SOLID, TINNED COPPER GROUND WIRE
- EXOTHERMIC WELD
- MECHANICAL CONNECTION
- COPPER GROUND ROD
- GROUND ROD W/ TEST WELL

NOTE:

SEE FINAL EQUIPMENT PLAN FOR NEW EQUIPMENT REQUIRING GROUNDING. CONTRACTOR TO VERIFY EXISTING EQUIPMENT GROUNDING IN FIELD. CONTRACTOR TO VERIFY IN FIELD AND INSTALL ANY MISSING T-MOBILE GROUND BARS ON SITE.

T-Mobile
8550 W. BRYN MAWR AVE, SUITE 100
CHICAGO, IL 60631

CROWN CASTLE
3025 HIGHLAND PKWY, SUITE 510,
DOWNERS GROVE, IL, 60515

POD
POWER OF DESIGN
11490 BLUEGRASS PKWY
LOUISVILLE, KY 40299
502-437-5252

T-MOBILE SITE NUMBER:
CH80545A

BU #: **875515**
180 ANETS

180 NORTH ANETS DRIVE
NORTHBROOK, IL 60062

EXISTING 100'-0" MONOPOLE

ISSUED FOR:

REV	DATE	DRWN	DESCRIPTION	DES /QA
0	6/21/2023	AS	CONSTRUCTION	MEP

MARK PATTERSON
062-067337
LICENSED PROFESSIONAL ENGINEER
STATE OF ILLINOIS
06/21/2023
EXPIRES: 11/30/2023

IT IS A VIOLATION OF LAW FOR ANY PERSON, UNLESS THEY ARE ACTING UNDER THE DIRECTION OF A LICENSED PROFESSIONAL ENGINEER, TO ALTER THIS DOCUMENT.

SHEET NUMBER:	REVISION:
G-1	0

DigiSigner Document ID: d0dff40a-7aae-48fd-85bf-5ed21f60df6e

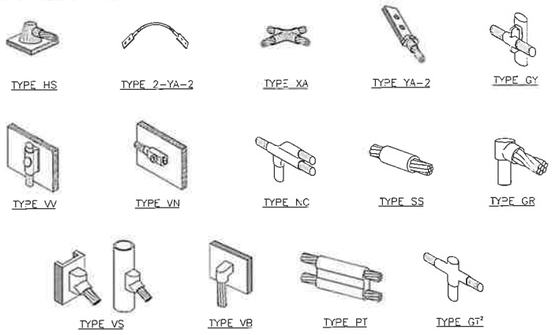

NOTE:

1. ERICO EXOTHERMIC "MOLD TYPES" SHOWN HERE ARE EXAMPLES. CONSULT WITH CONSTRUCTION MANAGER FOR SPECIFIC MOLDS TO BE USED FOR THIS PROJECT.
2. MOLD TYPE ONLY TO BE USED BELOW GRADE WHEN CONNECTING GROUND RING TO GROUND ROD.

1 CADWELD GROUNDING CONNECTIONS
SCALE: NOT TO SCALE

WIRE SIZE	BURNDY LUG	BOLT SIZE
#6 AWG GREEN INSULATED	YA6C-2TC38	3/8" - 16 NC S 2 BOLT
#2 AWG SOLID TINNED	YA3C-2TC38	3/8" - 16 NC S 2 BOLT
#2 AWG STRANDED	YA2C-2TC38	3/8" - 16 NC S 2 BOLT
#2/0 AWG STRANDED	YA26-2TC38	3/8" - 16 NC S 2 BOLT
#4/0 AWG STRANDED	YA28-2N	1/2" - 16 NC S 2 BOLT

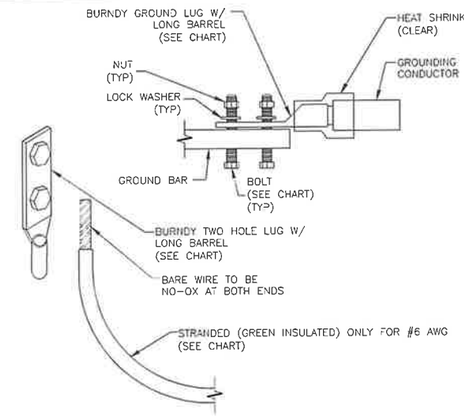

NOTES:

1. ALL GROUNDING LUGS ARE TO BE INSTALLED PER MANUFACTURER'S SPECIFICATIONS. ALL HARDWARE BOLTS, NUTS, LOCK WASHERS SHALL BE STAINLESS STEEL. ALL HARDWARE ARE TO BE AS FOLLOWS: BOLT, FLAT WASHER,GROUND BAR, GROUND LUG, FLAT WASHER AND NUT.

2 MECHANICAL LUG CONNECTION
SCALE: NOT TO SCALE

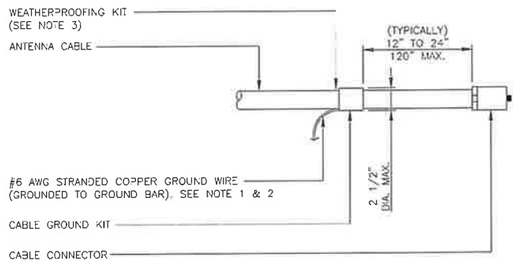

NOTES:

1. DO NOT INSTALL CABLE GROUND KIT AT A BEND AND ALWAYS DIRECT GROUND WIRE DOWN TO GROUND BAR.
2. GROUNDING KIT SHALL BE TYPE AND PART NUMBER AS SUPPLIED OR RECOMMENDED BY CABLE MANUFACTURER.
3. WEATHER PROOFING SHALL BE TWO-PART TAPE KIT. COLD SHRINK SHALL NOT BE USED.

3 CABLE GROUND KIT CONNECTION
SCALE: NOT TO SCALE

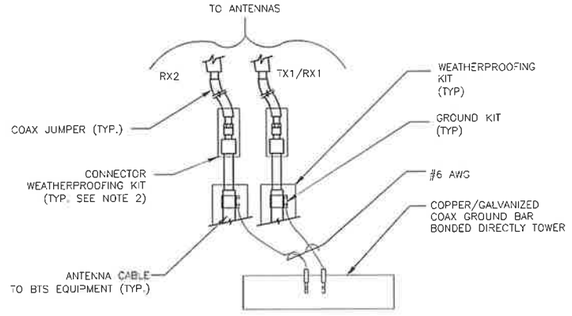

NOTES:

1. DO NOT INSTALL CABLE GROUND KIT AT A BEND AND ALWAYS DIRECT GROUND WIRE DOWN TO ANTENNA GROUND BAR.
2. WEATHER PROOFING SHALL BE TWO-PART TAPE KIT. COLD SHRINK SHALL NOT BE USED.

4 GROUND CABLE CONNECTION
SCALE: NOT TO SCALE

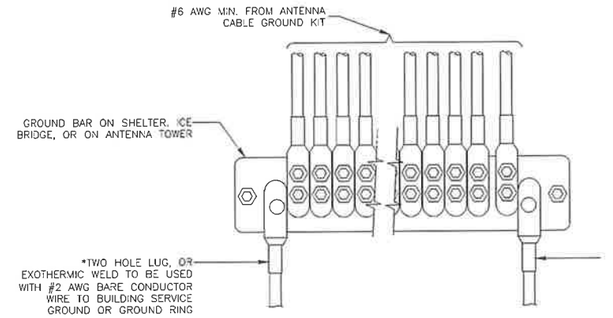

5 GROUNDWIRE INSTALLATION
SCALE: NOT TO SCALE

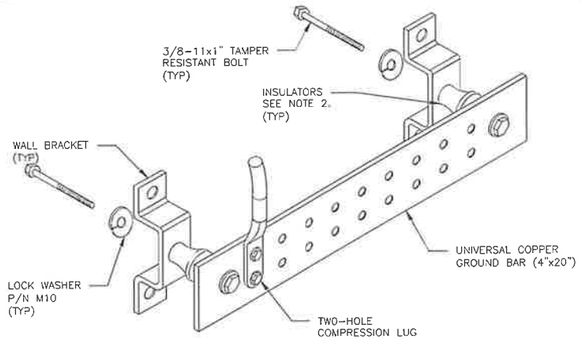

NOTES:

1. DOWN LEAD (HOME RUN) CONDUCTORS ARE NOT TO BE INSTALLED ON CROWN CASTLE USA INC. TOWER, PER THE GROUNDING DOWN CONDUCTOR POLICY GAS-STD-10091. NO MODIFICATION OR DRILLING TO TOWER STEEL IS ALLOWED IN ANY FORM OR FASHION, CAD-WELDING ON THE TOWER AND/OR IN THE AIR ARE NOT PERMITTED.
2. OMIT INSULATOR WHEN MOUNTING TO TOWER STEEL OR PLATFORM STEEL USE INSULATORS WHEN ATTACHING TO BUILDING OR SHELTERS.

6 GROUND BAR DETAIL
SCALE: NOT TO SCALE

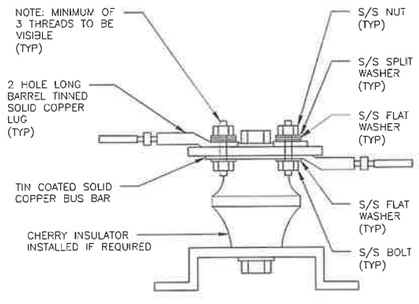

7 LUG DETAIL
SCALE: NOT TO SCALE

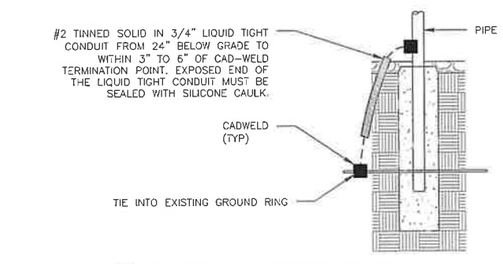

8 TRANSITIONING GROUND DETAIL
SCALE: NOT TO SCALE

T-Mobile
8550 W. BRYN MAWR AVE, SUITE 100
CHICAGO, IL 60631

CROWN CASTLE
3025 HIGHLAND PKWY, SUITE 510,
DOWNERS GROVE, IL, 60515

POD
POWER OF DESIGN
11490 BLUEGRASS PKWY
LOUISVILLE, KY 40299
502-437-5252

T-MOBILE SITE NUMBER:
CH80545A

BU #: **875515**
180 ANETS

180 NORTH ANETS DRIVE
NORTHBROOK, IL 60062

EXISTING 100'-0" MONOPOLE

ISSUED FOR:

REV	DATE	DRWN	DESCRIPTION	DES /QA
0	6/21/2023	AS	CONSTRUCTION	MEP

MARK PATTERSON
062-067337
LICENSED PROFESSIONAL ENGINEER
STATE OF ILLINOIS
06/21/2023
EXPIRES: 11/30/2023

IT IS A VIOLATION OF LAW FOR ANY PERSON, UNLESS THEY ARE ACTING UNDER THE DIRECTION OF A LICENSED PROFESSIONAL ENGINEER, TO ALTER THIS DOCUMENT.

SHEET NUMBER: G-2
REVISION: 0

DigiSigner Document ID: d9dff40a-7aee-48fd-85bf-5cd21f60df6e

PV-LPPGS
MONOPOLE GUARDIAN MOUNT

SEE SHEET 2 - TABLE 1 FOR FULL CONFIGURATION DETAILS

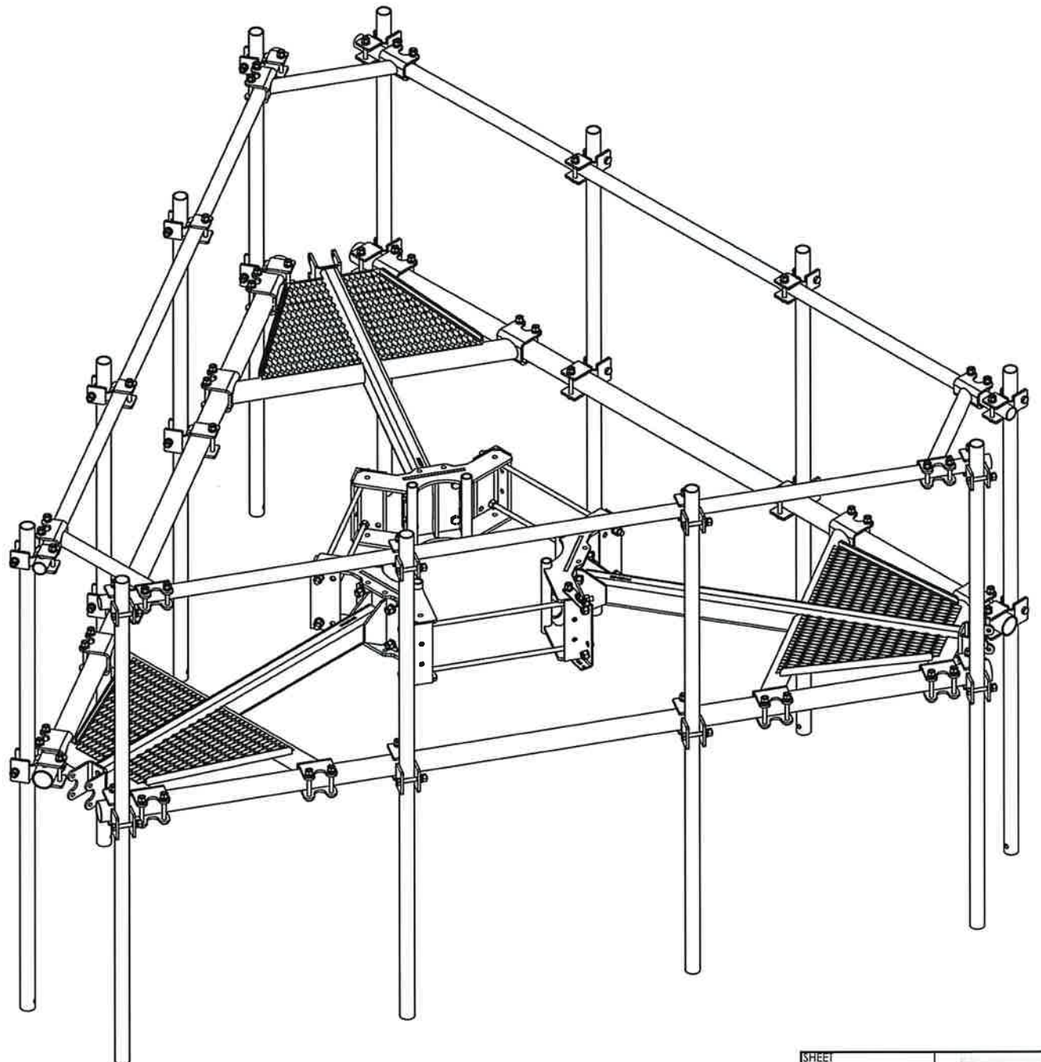

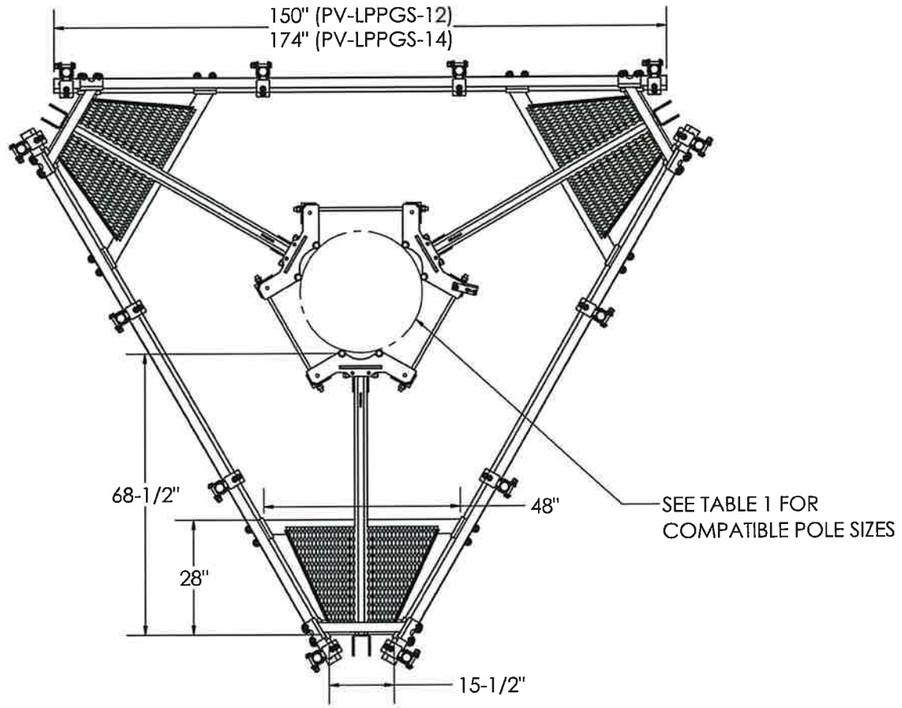

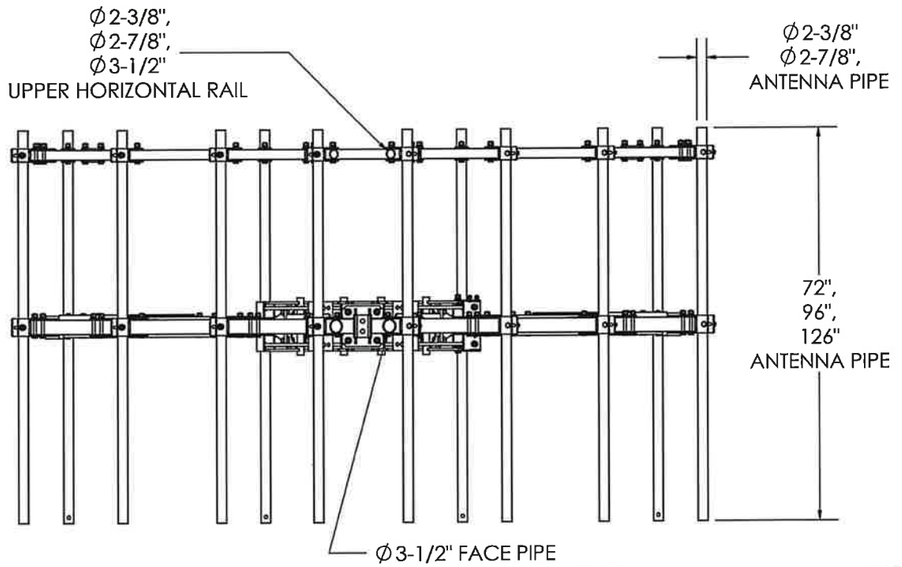

SHEET 1 OF 16	CATEGORY 02_Monopole	9	ACC1 REPLACE ACC2, PV-CMX-CG-BO REPLACE 115-242	3/16/21	PERFECTVISION
4/27/2021 SCALE 1:36	SERIES 01_Triangular	8	KKGS UPDATE	2/2/21	
DIMENSIONS ARE IN INCHES TOLERANCES U.N.O. HOLES: +1/16", -1/32" ANGULAR: PROFILE±1/4°, BEND±2° ALL OTHERS: ±1/16"	TYPE PV-LPPGS_GUARDIAN	7	REPLACED PKBK WITH PV-KKRS	11/11/20	MONOPOLE GUARDIAN MOUNT
	BY DJN	6	ADDED ALL THREAD NOTE TO COLLARS	7/27/20	DOCUMENT NUMBER LPPGS-ENG-01-R9
	CHECKED SJS	5	ADDED HR2-AP3 CONFIGS	1/20/20	REV 9
	STATUS APPROVED	REV	DESCRIPTION	DATE	

C:\PVWSteel\Catalog\SW Working Files\Engineering Details\

PROPRIETARY AND CONFIDENTIAL THE INFORMATION CONTAINED IN THIS DRAWING IS THE SOLE PROPERTY OF PERFECTVISION. ANY REPRODUCTION IN PART OR AS A WHOLE WITHOUT THE WRITTEN PERMISSION OF PERFECTVISION IS PROHIBITED.

DigiSigner Document ID: d9dff40a-7aee-48fd-85bf-5cd21f60df6e

PART NUMBERS, WEIGHTS, & EPA

Table 1: Configurations

Part Number	Description	Weight (lbs)	(EPA)A (ft2)*	(EPA)A 1/2" Radial Ice (ft2)*	Included Parts																												
					PV-RM1045-GS	PV-RM3060-GS	PV-LPP-GS-B	PV--LPP-GS-EXT	PV-LPP-GS-HK	PV-LPP-GS-HR238	PV-LPP-GS-HR278	PV-LPP-GS-HR312	PV-LPP-GS-TKB	PV-XP-DC-2020	PV-XP-DC-2025	PV-XP-DC-2030	PV-XP-DC-2525	PV-XP-DC-2530	PIPE-238X96	PIPE-238X150	PIPE-238X174	PIPE-278X96	PIPE-278X126	PIPE-278X150	PIPE-278X174	PIPE-312X150	PIPE-312X174	PV-SCRB-RMGS	PV-CMX-CG-BO	PV-LPP-GS-ACC2
PV-LPPGS-12M-B†	12'6" Face, 10"-40" OD Pole	1210	13.9	18.1	1	-	1	-	1	-	-	-	-	-	-	-	-	-	-	-	-	-	-	-	-	3	-	1	1	3
PV-LPPGS-14M-B†	14'6" Face, 13"-44" OD Pole	1480	16.7	21.4	1	-	1	1	1	-	-	-	-	-	-	-	-	-	-	-	-	-	-	-	-	-	3	1	1	3
PV-LPPGS-14L-B†	14'6" Face, 35"-60" OD Pole	1495	14.8	19.3	-	1	1	-	1	-	-	-	-	-	-	-	-	-	-	-	-	-	-	-	-	-	3	1	1	3
PV-LPPGS-12M-HR2-B	12'6" Face, 10"-40" OD Pole, 2-3/8" OD Horizontal Rail, No Antenna Pipe	1400	18.5	25.0	1	-	1	-	1	1	-	-	-	-	-	-	-	-	-	3	-	-	-	-	-	3	-	1	1	3
PV-LPPGS-12M-HR25-B	12'6" Face, 10"-40" OD Pole, 2-7/8" OD Horizontal Rail, No Antenna Pipe	1495	19.4	25.9	1	-	1	-	1	-	1	-	-	-	-	-	-	-	-	-	-	-	-	3	-	3	-	1	1	3
PV-LPPGS-12M-HR3-B	12'6" Face, 10"-40" OD Pole, 3-1/2" OD Horizontal Rail, No Antenna Pipe	1575	20.6	27.1	1	-	1	-	1	-	-	1	-	-	-	-	-	-	-	-	-	-	-	-	-	6	-	1	1	3
PV-LPPGS-14M-HR2-B	14'6" Face, 13"-44" OD Pole, 2-3/8" OD Horizontal Rail, No Antenna Pipe	1695	22.0	29.2	1	-	1	1	1	1	-	-	-	-	-	-	-	-	-	-	3	-	-	-	-	-	3	1	1	3
PV-LPPGS-14M-HR25-B	14'6" Face, 13"-44" OD Pole, 2-7/8" OD Horizontal Rail, No Antenna Pipe	1800	23.0	30.3	1	-	1	1	1	-	1	-	-	-	-	-	-	-	-	-	-	-	-	3	-	3	1	1	3
PV-LPPGS-14M-HR3-B	14'6" Face, 13"-44" OD Pole, 3-1/2" OD Horizontal Rail, No Antenna Pipe	1895	24.4	31.6	1	-	1	1	1	-	-	1	-	-	-	-	-	-	-	-	-	-	-	-	-	6	1	1	3
PV-LPPGS-14L-HR2-B	14'6" Face, 35"-60" OD Pole, 2-3/8" OD Horizontal Rail, No Antenna Pipe	1710	20.0	27.1	-	1	1	-	1	1	-	-	-	-	-	-	-	-	-	3	-	-	-	-	-	3	1	1	3
PV-LPPGS-14L-HR25-B	14'6" Face, 35"-60" OD Pole, 2-7/8" OD Horizontal Rail, No Antenna Pipe	1820	21.1	28.2	-	1	1	-	1	-	1	-	-	-	-	-	-	-	-	-	-	-	-	3	-	3	1	1	3
PV-LPPGS-14L-HR3-B	14'6" Face, 35"-60" OD Pole, 3-1/2" OD Horizontal Rail, No Antenna Pipe	1910	22.5	29.5	-	1	1	-	1	-	-	1	-	-	-	-	-	-	-	-	-	-	-	-	-	6	1	1	3
PV-LPPGS-12M-HR2-AP1	12'6" Face, 10"-40" OD Pole, 2-3/8" OD Horizontal Rail, (12) 2-3/8" x 96" Pipe	1925	19.0	25.6	1	-	1	-	1	1	-	-	-	12	-	12	-	-	12	3	-	-	-	-	-	3	-	1	1	3
PV-LPPGS-12M-HR25-AP1	12'6" Face, 10"-40" OD Pole, 2-7/8" OD Horizontal Rail, (12) 2-3/8" x 96" Pipe	2030	19.9	26.5	1	-	1	-	1	-	1	-	-	-	12	12	-	-	12	-	-	-	-	3	-	3	-	1	1	3
PV-LPPGS-12M-HR3-AP1	12'6" Face, 10"-40" OD Pole, 3-1/2" OD Horizontal Rail, (12) 2-3/8" x 96" Pipe	2120	21.0	27.7	1	-	1	-	1	-	-	1	-	-	-	24	-	-	12	-	-	-	-	-	-	6	-	1	1	3
PV-LPPGS-14M-HR2-AP1	14'6" Face, 13"-44" OD Pole, 2-3/8" OD Horizontal Rail, (12) 2-3/8" x 96" Pipe	2215	22.5	29.8	1	-	1	1	1	1	-	-	-	12	-	12	-	-	12	-	3	-	-	-	-	-	3	1	1	3
PV-LPPGS-14M-HR25-AP1	14'6" Face, 13"-44" OD Pole, 2-7/8" OD Horizontal Rail, (12) 2-3/8" x 96" Pipe	2335	23.6	30.9	1	-	1	1	1	-	1	-	-	-	12	12	-	-	12	-	-	-	-	3	-	3	1	1	3
PV-LPPGS-14M-HR3-AP1	14'6" Face, 13"-44" OD Pole, 3-1/2" OD Horizontal Rail, (12) 2-3/8" x 96" Pipe	2440	24.9	32.2	1	-	1	1	1	-	-	1	-	-	-	24	-	-	12	-	-	-	-	-	-	6	1	1	3
PV-LPPGS-14L-HR2-AP1	14'6" Face, 35"-60" OD Pole, 2-3/8" OD Horizontal Rail, (12) 2-3/8" x 96" Pipe	2230	20.6	27.7	-	1	1	-	1	1	-	-	-	12	-	12	-	-	12	-	3	-	-	-	-	-	3	1	1	3
PV-LPPGS-14L-HR25-AP1	14'6" Face, 35"-60" OD Pole, 2-7/8" OD Horizontal Rail, (12) 2-3/8" x 96" Pipe	2350	21.6	28.8	-	1	1	-	1	-	1	-	-	-	12	12	-	-	12	-	-	-	-	3	-	3	1	1	3
PV-LPPGS-14L-HR3-AP1	14'6" Face, 35"-60" OD Pole, 3-1/2" OD Horizontal Rail, (12) 2-3/8" x 96" Pipe	2450	23.0	30.1	-	1	1	-	1	-	-	1	-	-	-	24	-	-	12	-	-	-	-	-	-	6	1	1	3
PV-LPPGS-12M-HR2-AP3	12'6" Face, 10"-40" OD Pole, 2-3/8" OD Horizontal Rail, (12) 2-7/8" x 96" Pipe	2155	19.0	25.6	1	-	1	-	1	1	-	-	-	-	12	-	-	12	-	3	-	12	-	-	-	3	-	1	1	3
PV-LPPGS-12M-HR25-AP3	12'6" Face, 10"-40" OD Pole, 2-7/8" OD Horizontal Rail, (12) 2-7/8" x 96" Pipe	2260	19.9	26.5	1	-	1	-	1	-	1	-	-	-	-	-	12	12	-	-	-	12	-	3	-	3	-	1	1	3
PV-LPPGS-12M-HR3-AP3	12'6" Face, 10"-40" OD Pole, 3-1/2" OD Horizontal Rail, (12) 2-7/8" x 96" Pipe	2355	21.0	27.6	1	-	1	-	1	-	-	1	-	-	-	-	-	-	24	-	-	-	12	-	-	-	6	-	1	1	3
PV-LPPGS-14M-HR2-AP3	14'6" Face, 13"-44" OD Pole, 2-3/8" OD Horizontal Rail, (12) 2-7/8" x 96" Pipe	2460	21.0	27.7	1	-	1	1	1	1	-	-	-	12	-	-	12	-	-	3	12	-	-	-	-	-	3	1	1	3
PV-LPPGS-14M-HR25-AP3	14'6" Face, 13"-44" OD Pole, 2-7/8" OD Horizontal Rail, (12) 2-7/8" x 96" Pipe	2565	23.5	30.8	1	-	1	1	1	-	1	-	-	-	-	-	12	12	-	-	-	12	-	-	3	-	3	1	1	3
PV-LPPGS-14M-HR3-AP3	14'6" Face, 13"-44" OD Pole, 3-1/2" OD Horizontal Rail, (12) 2-7/8" x 96" Pipe	2670	24.8	32.2	1	-	1	1	1	-	-	1	-	-	-	-	-	-	24	-	-	-	12	-	-	-	6	1	1	3
PV-LPPGS-14L-HR2-AP3	14'6" Face, 35"-60" OD Pole, 2-3/8" OD Horizontal Rail, (12) 2-7/8" x 96" Pipe	2475	20.6	27.7	-	1	1	-	1	1	-	-	-	12	-	-	12	-	-	3	12	-	-	-	-	-	3	1	1	3
PV-LPPGS-14L-HR25-AP3	14'6" Face, 35"-60" OD Pole, 2-7/8" OD Horizontal Rail, (12) 2-7/8" x 96" Pipe	2580	21.6	28.7	-	1	1	-	1	-	1	-	-	-	-	-	12	12	-	-	-	12	-	-	3	-	3	1	1	3
PV-LPPGS-14L-HR3-AP3	14'6" Face, 35"-60" OD Pole, 3-1/2" OD Horizontal Rail, (12) 2-7/8" x 96" Pipe	2690	22.9	30.1	-	1	1	-	1	-	-	1	-	-	-	-	-	-	24	-	-	-	12	-	-	-	6	1	1	3
PV-LPPGS-12M-TKB3-AP4	12'6" Face, 10"-40" OD Pole, 3-1/2" OD Horizontal Rail with Brace Kit, (12) 2-7/8" x 126" Pipe	3180	27.7	37.3	2	-	1	-	1	-	-	1	1	-	-	-	-	24	-	-	-	-	12	-	-	6	-	2	2	3
PV-LPPGS-14M-TKB3-AP4	14'6" Face, 13"-44"" OD Pole, 3-1/2" OD Horizontal Rail with Brace Kit, (12) 2-7/8" x 126" Pipe	3715	31.5	41.9	2	-	1	2	1	-	-	1	1	-	-	-	-	24	-	-	-	-	12	-	-	-	6	2	2	3
PV-LPPGS-14L-TKB3-AP4	14'6" Face, 35"-60" OD Pole, 3-1/2" OD Horizontal Rail with Brace Kit, (12) 2-7/8" x 126" Pipe	3745	29.5	39.8	-	2	1	-	1	-	-	1	1	-	-	-	-	24	-	-	-	-	12	-	-	-	6	2	2	3

* (EPA)A INCLUDES ALL STRUCTURAL MEMBERS INCLUDING CROSSOVER CONNECTIONS. IF DESIRED ADD ANTENNA PIPE PER TABLE 2.
† THESE MOUNTS ARE NOT CLASSIFIED TO TIA-5053 STANDARD

Table 2: Antenna Pipe Additional EPA (Each)

Size	(EPA)A (ft2)	(EPA)A 1/2" Radial Ice (ft2)
2-3/8" x 96"	1.5	2.2
2-7/8" x 96"	1.8	2.5
2-7/8" x 126"	2.4	3.3

SHEET: 2 OF 16
4/27/2021
SCALE: 1:48
DIMENSIONS ARE IN INCHES
TOLERANCES U.N.O.
HOLES: +1/16", -1/32"
ANGULAR: PROFILE±1/4°, BEND±2°
ALL OTHERS: ±1/16"

CATEGORY	02_Monopole	9	ACC1 REPLACE ACC2, PV-CMX-CG-BO REPLACE 115-242	3/16/21
SERIES	01_Triangular	8	KKGS UPDATE	2/2/21
TYPE	PV-LPPGS_GUARDIAN	7	REPLACED PKBK WITH PV-KKRS	11/11/20
BY	DJN	6	ADDED ALL THREAD NOTE TO COLLARS	7/27/20
CHECKED	SJS	5	ADDED HR2-AP3 CONFIGS	1/20/20
STATUS	APPROVED	REV	DESCRIPTION	DATE

PERFECTVISION®
MONOPOLE GUARDIAN MOUNT
DOCUMENT NUMBER: LPPGS-ENG-01-R9
REV: 9

C:\PVMSteel\Catalog\SW Working Files\Engineering Details\

PROPRIETARY AND CONFIDENTIAL THE INFORMATION CONTAINED IN THIS DRAWING IS THE SOLE PROPERTY OF PERFECTVISION. ANY REPRODUCTION IN PART OR AS A WHOLE WITHOUT THE WRITTEN PERMISSION OF PERFECTVISION IS PROHIBITED.

DigiSigner Document ID: d9dff40a-7aee-48fd-85bf-5cd21f60df6e

PART NUMBERS, WEIGHTS, & EPA

Table 5: KKGS Configurations

Part Number	Description	Weight (lbs)	(EPA)A (ft2)*	(EPA)A 1/2" Radial ice (ft2)*	Included Parts																															
					PV-RM1045-GS	PV-RM3060-GS	PV-RM1045-MD	PV-RM3060-MD	PV-LPP-GS-B	PV--LPP-GS-EXT	PV-LPP-GS-HK	PV-LPP-GS-HR238	PV-LPP-GS-HR278	PV-LPP-GS-HR312	PV-KKGS-1	PV-XP-DC-2020	PV-XP-DC-2025	PV-XP-DC-2030	PV-XP-DC-2525	PV-XP-DC-2530	PIPE-238X96	PIPE-238X150	PIPE-238X174	PIPE-278X96	PIPE-278X126	PIPE-278X150	PIPE-278X174	PIPE-312X150	PIPE-312X174	PV-SCRB-RMGS	PV-CMX-CG-BO	PV-LPP-GS-ACC2
PV-LPPGS-12M-HR2-K-B	12'6" Face, 10"-40" OD Pole, 2-3/8" OD Horizontal Rail, Kicker, No Antenna Pipe	1710	21.2	28.5	1	-	1	-	1	-	1	1	-	-	3	-	-	-	-	-	3	-	-	-	-	-	3	-	1	1	3
PV-LPPGS-12M-HR25-K-B	12'6" Face, 10"-40" OD Pole, 2-7/8" OD Horizontal Rail, Kicker, No Antenna Pipe	1805	22.1	29.4	1	-	1	-	1	-	1	-	1	-	3	-	-	-	-	-	-	-	-	-	3	-	3	-	1	1	3
PV-LPPGS-12M-HR3-K-B	12'6" Face, 10"-40" OD Pole, 3-1/2" OD Horizontal Rail, Kicker, No Antenna Pipe	1885	23.3	30.6	1	-	1	-	1	-	1	-	-	1	3	-	-	-	-	-	-	-	-	-	-	-	6	-	1	1	3
PV-LPPGS-14M-HR2-K-B	14'6" Face, 13"-44" OD Pole, 2-3/8" OD Horizontal Rail, Kicker, No Antenna Pipe	2005	24.7	32.7	1	-	1	-	1	1	1	1	-	-	3	-	-	-	-	-	-	3	-	-	-	-	-	3	1	1	3
PV-LPPGS-14M-HR25-K-B	14'6" Face, 13"-44" OD Pole, 2-7/8" OD Horizontal Rail, Kicker, No Antenna Pipe	2110	25.7	33.8	1	-	1	-	1	1	1	-	1	-	3	-	-	-	-	-	-	-	-	-	-	3	-	3	1	1	3
PV-LPPGS-14M-HR3-K-B	14'6" Face, 13"-44" OD Pole, 3-1/2" OD Horizontal Rail, Kicker, No Antenna Pipe	2205	27.1	35.1	1	-	1	-	1	1	1	-	-	1	3	-	-	-	-	-	-	-	-	-	-	-	6	1	1	3
PV-LPPGS-14L-HR2-K-B	14'6" Face, 35"-60" OD Pole, 2-3/8" OD Horizontal Rail, Kicker, No Antenna Pipe	2020	22.7	30.6	-	1	-	1	1	-	1	1	-	-	3	-	-	-	-	-	-	3	-	-	-	-	-	3	1	1	3
PV-LPPGS-14L-HR25-K-B	14'6" Face, 35"-60" OD Pole, 2-7/8" OD Horizontal Rail, Kicker, No Antenna Pipe	2130	23.8	31.7	-	1	-	1	1	-	1	-	1	-	3	-	-	-	-	-	-	-	-	-	-	-	3	-	3	1	1	3
PV-LPPGS-14L-HR3-K-B	14'6" Face, 35"-60" OD Pole, 3-1/2" OD Horizontal Rail, Kicker, No Antenna Pipe	2220	25.1	33	-	1	-	1	1	-	1	-	-	1	3	-	-	-	-	-	-	-	-	-	-	-	6	1	1	3
PV-LPPGS-12M-HR2-K-AP1	12'6" Face, 10"-40" OD Pole, 2-3/8" OD Horizontal Rail, Kicker, (12) 2-3/8" x 96" Pipe	2235	39.9	55	1	-	1	-	1	-	1	1	-	-	3	12	-	12	-	-	12	3	-	-	-	-	3	-	1	1	3
PV-LPPGS-12M-HR25-K-AP1	12'6" Face, 10"-40" OD Pole, 2-7/8" OD Horizontal Rail, Kicker, (12) 2-3/8" x 96" Pipe	2340	40.8	55.9	1	-	1	-	1	-	1	-	1	-	3	-	12	12	-	-	12	-	-	-	3	-	3	-	1	1	3
PV-LPPGS-12M-HR3-K-AP1	12'6" Face, 10"-40" OD Pole, 3-1/2" OD Horizontal Rail, Kicker, (12) 2-3/8" x 96" Pipe	2430	42	57.1	1	-	1	-	1	-	1	-	-	1	3	-	-	24	-	-	12	-	-	-	-	-	6	-	1	1	3
PV-LPPGS-14M-HR2-K-AP1	14'6" Face, 13"-44" OD Pole, 2-3/8" OD Horizontal Rail, Kicker, (12) 2-3/8" x 96" Pipe	2525	43.4	59.2	1	-	1	-	1	1	1	1	-	-	3	12	-	12	-	-	12	-	3	-	-	-	-	-	3	1	1	3
PV-LPPGS-14M-HR25-K-AP1	14'6" Face, 13"-44" OD Pole, 2-7/8" OD Horizontal Rail, Kicker, (12) 2-3/8" x 96" Pipe	2645	44.5	60.3	1	-	1	-	1	1	1	-	1	-	3	-	12	12	-	-	12	-	-	-	-	-	3	-	3	1	1	3
PV-LPPGS-14M-HR3-K-AP1	14'6" Face, 13"-44" OD Pole, 3-1/2" OD Horizontal Rail, Kicker, (12) 2-3/8" x 96" Pipe	2750	45.8	61.6	1	-	1	-	1	1	1	-	-	1	3	-	-	24	-	-	12	-	-	-	-	-	-	-	6	1	1	3
PV-LPPGS-14L-HR2-K-AP1	14'6" Face, 35"-60" OD Pole, 2-3/8" OD Horizontal Rail, Kicker, (12) 2-3/8" x 96" Pipe	2540	41.5	57.1	-	1	-	1	1	-	1	1	-	-	3	12	-	12	-	-	12	-	3	-	-	-	-	-	3	1	1	3
PV-LPPGS-14L-HR25-K-AP1	14'6" Face, 35"-60" OD Pole, 2-7/8" OD Horizontal Rail, Kicker, (12) 2-3/8" x 96" Pipe	2660	42.5	58.2	-	1	-	1	1	-	1	-	1	-	3	-	12	12	-	-	12	-	-	-	-	-	3	-	3	1	1	3
PV-LPPGS-14L-HR3-K-AP1	14'6" Face, 35"-60" OD Pole, 3-1/2" OD Horizontal Rail, Kicker, (12) 2-3/8" x 96" Pipe	2760	43.9	59.5	-	1	-	1	1	-	1	-	-	1	3	-	-	24	-	-	12	-	-	-	-	-	-	-	6	1	1	3
PV-LPPGS-12M-HR2-K-AP3	12'6" Face, 10"-40" OD Pole, 2-3/8" OD Horizontal Rail, Kicker, (12) 2-7/8" x 96" Pipe	2465	43.7	58.8	1	-	1	-	1	-	1	1	-	-	3	-	12	-	-	12	-	3	-	12	-	-	-	3	-	1	1	3
PV-LPPGS-12M-HR25-K-AP3	12'6" Face, 10"-40" OD Pole, 2-7/8" OD Horizontal Rail, Kicker, (12) 2-7/8" x 96" Pipe	2570	44.7	59.8	1	-	1	-	1	-	1	-	1	-	3	-	-	-	12	12	-	-	-	12	-	3	-	3	-	1	1	3
PV-LPPGS-12M-HR3-K-AP3	12'6" Face, 10"-40" OD Pole, 3-1/2" OD Horizontal Rail, Kicker, (12) 2-7/8" x 96" Pipe	2665	45.8	60.9	1	-	1	-	1	-	1	-	-	1	3	-	-	-	-	24	-	-	-	12	-	-	-	6	-	1	1	3
PV-LPPGS-14M-HR2-K-AP3	14'6" Face, 13"-44" OD Pole, 2-3/8" OD Horizontal Rail, Kicker, (12) 2-7/8" x 96" Pipe	2770	47.2	63.1	1	-	1	-	1	1	1	1	-	-	3	-	12	-	-	12	-	-	3	12	-	-	-	-	3	1	1	3
PV-LPPGS-14M-HR25-K-AP3	14'6" Face, 13"-44" OD Pole, 2-7/8" OD Horizontal Rail, Kicker, (12) 2-7/8" x 96" Pipe	2875	48.3	64.1	1	-	1	-	1	1	1	-	1	-	3	-	-	-	12	12	-	-	-	12	-	-	3	-	3	1	1	3
PV-LPPGS-14M-HR3-K-AP3	14'6" Face, 13"-44" OD Pole, 3-1/2" OD Horizontal Rail, Kicker, (12) 2-7/8" x 96" Pipe	2980	49.6	65.5	1	-	1	-	1	1	1	-	-	1	3	-	-	-	-	24	-	-	-	12	-	-	-	-	6	1	1	3
PV-LPPGS-14L-HR2-K-AP3	14'6" Face, 35"-60" OD Pole, 2-3/8" OD Horizontal Rail, Kicker, (12) 2-7/8" x 96" Pipe	2785	45.3	60.9	-	1	-	1	1	-	1	1	-	-	3	-	12	-	-	12	-	-	3	12	-	-	-	-	3	1	1	3
PV-LPPGS-14L-HR25-K-AP3	14'6" Face, 35"-60" OD Pole, 2-7/8" OD Horizontal Rail, Kicker, (12) 2-7/8" x 96" Pipe	2890	46.4	62	-	1	-	1	1	-	1	-	1	-	3	-	-	-	12	12	-	-	-	12	-	-	3	-	3	1	1	3
PV-LPPGS-14L-HR3-K-AP3	14'6" Face, 35"-60" OD Pole, 3-1/2" OD Horizontal Rail, Kicker, (12) 2-7/8" x 96" Pipe	3000	47.7	63.3	-	1	-	1	1	-	1	-	-	1	3	-	-	-	-	24	-	-	-	12	-	-	-	-	6	1	1	3

* (EPA)A INCLUDES ALL STRUCTURAL MEMBERS INCLUDING CROSSOVER CONNECTIONS. IF DESIRED ADD ANTENNA PIPE PER TABLE 4.

Table 4: Antenna Pipe Additional EPA (Each)

Size	(EPA)A (ft2)	(EPA)A 1/2" Radial Ice (ft2)
2-3/8" x 96"	1.5	2.2
2-7/8" x 96"	1.8	2.5

SHEET 3 OF 16	CATEGORY 02_Monopole	9	ACC1 REPLACE ACC2, PV-CMX-CG-BO REPLACE 115-242	3/16/21	PERFECTVISION
4/27/2021 SCALE 1:48	SERIES 01_Triangular	8	KKGS UPDATE	2/2/21	
DIMENSIONS ARE IN INCHES TOLERANCES U.N.O. HOLES: +1/16", -1/32" ANGULAR: PROFILE±1/4°, BEND±2° ALL OTHERS: ±1/16"	TYPE PV-LPPGS_GUARDIAN	7	REPLACED PKBK WITH PV-KKRS	11/11/20	MONOPOLE GUARDIAN MOUNT
	BY DJN	6	ADDED ALL THREAD NOTE TO COLLARS	7/27/20	DOCUMENT NUMBER LPPGS-ENG-01-R9 REV 9
	CHECKED SJS	5	ADDED HR2-AP3 CONFIGS	1/20/20	
	STATUS APPROVED	REV	DESCRIPTION	DATE	

C:\PWSteel\Catalog\SW Working Files\Engineering Details\

PROPRIETARY AND CONFIDENTIAL THE INFORMATION CONTAINED IN THIS DRAWING IS THE SOLE PROPERTY OF PERFECTVISION. ANY REPRODUCTION IN PART OR AS A WHOLE WITHOUT THE WRITTEN PERMISSION OF PERFECTVISION IS PROHIBITED.

DigiSigner Document ID: d9dff40a-7aee-48fd-85bf-5cd21f60df6e

INCLUDED PART OVERVIEW

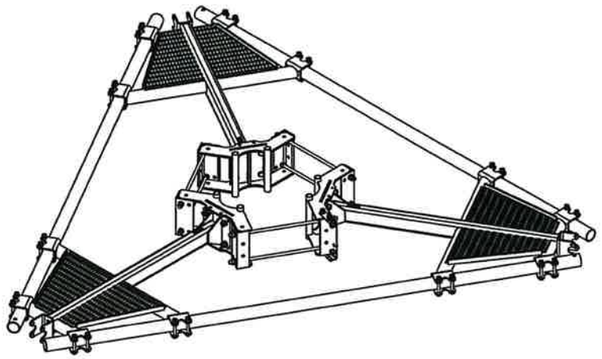

BASE MOUNT
(PV-LPPGS-12M-B SHOWN)

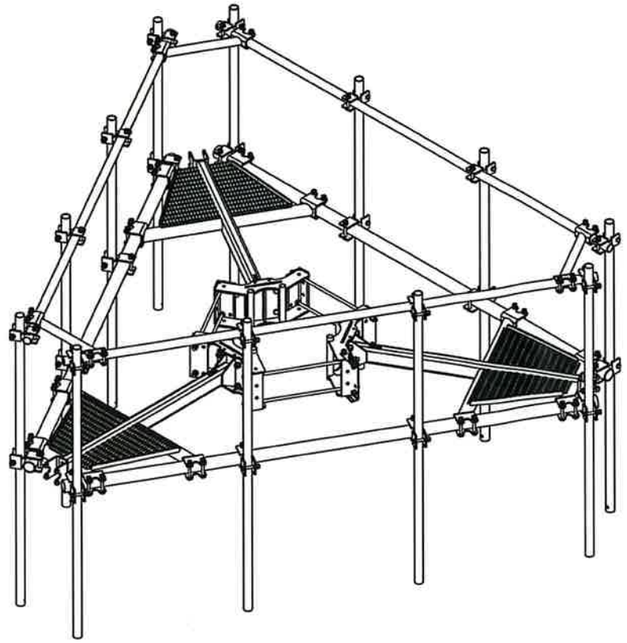

MOUNT WITH UPPER RAIL AND ANTENNA PIPE
(PV-LPPGS-12M-HR2-AP1 SHOWN)

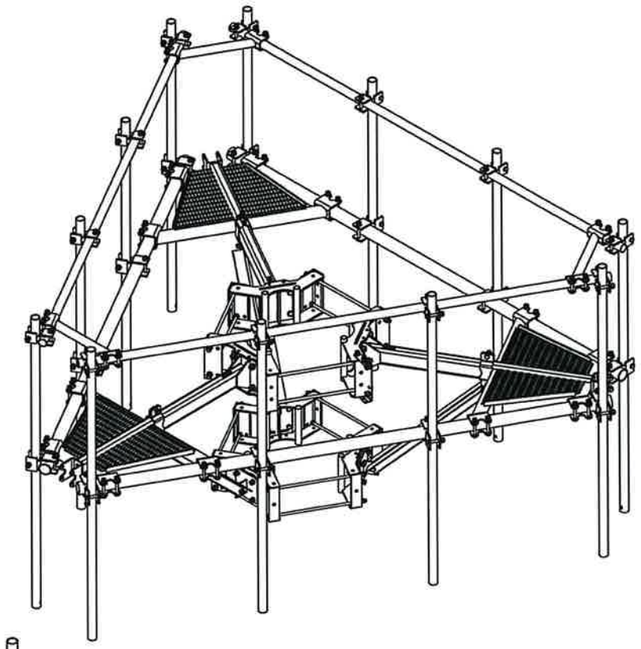

MOUNT WITH KICKER KIT AND ANTENNA PIPE
(PV-LPPGS-12M-HR2-K-AP1 SHOWN)

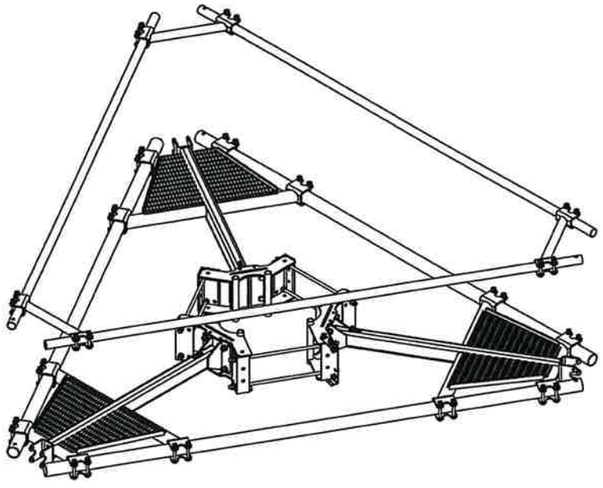

MOUNT WITH UPPER RAIL
(PV-LPPGS-12M-HR2-B SHOWN)

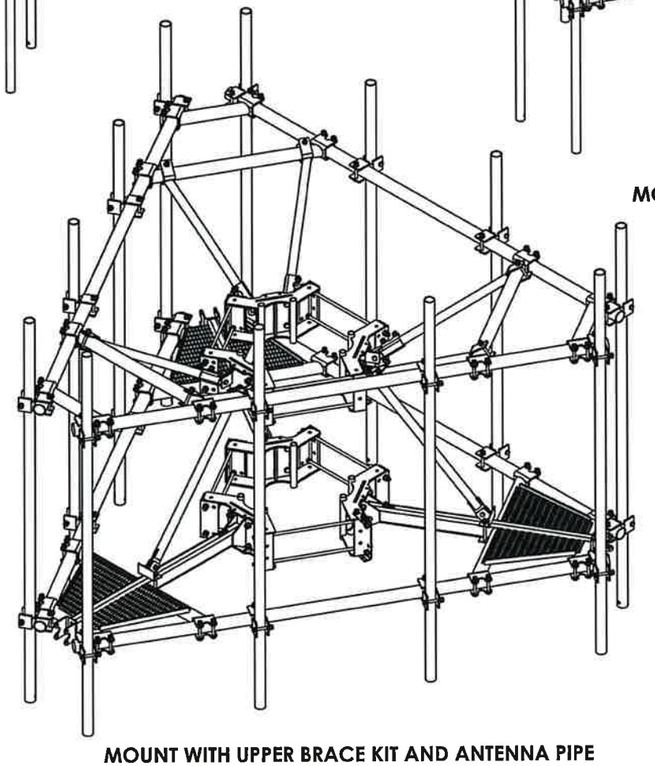

MOUNT WITH UPPER BRACE KIT AND ANTENNA PIPE
(PV-LPPGS-12M-TKB3-AP4 SHOWN)

Table 5: Threaded Connection Tightening Points	
Reference Config	**Total Connections**
Base Mount	48
Add Upper Rail	60
Add (12) Pipes	108*
Add KKGS	144
Add TKB	168

* APPROXIMATELY 40% LESS THAN INDUSTRY AVERAGE OF EQUIVALENT MOUNT

SHEET 4 OF 16	CATEGORY 02_Monopole	9	ACC1 REPLACE ACC2, PV-CMX-CG-BO REPLACE 115-242	3/16/21	PERFECTVISION
4/27/2021 SCALE 1:40	SERIES 01_Triangular	8	KKGS UPDATE	2/2/21	
DIMENSIONS ARE IN INCHES TOLERANCES U.N.O. HOLES: +1/16", -1/32" ANGULAR: PROFILE±1/4°, BEND±2° ALL OTHERS: ±1/16"	TYPE PV-LPPGS_GUARDIAN	7	REPLACED PKBK WITH PV-KKRS	11/11/20	MONOPOLE GUARDIAN MOUNT
	BY DJN	6	ADDED ALL THREAD NOTE TO COLLARS	7/27/20	DOCUMENT NUMBER LPPGS-ENG-01-R9 REV 9
	CHECKED SJS	5	ADDED HR2-AP3 CONFIGS	1/20/20	
	STATUS APPROVED	REV	DESCRIPTION	DATE	

C:\PVMSteel\Catalog\SW Working Files\Engineering Details\

PROPRIETARY AND CONFIDENTIAL THE INFORMATION CONTAINED IN THIS DRAWING IS THE SOLE PROPERTY OF PERFECTVISION. ANY REPRODUCTION IN PART OR AS A WHOLE WITHOUT THE WRITTEN PERMISSION OF PERFECTVISION IS PROHIBITED.

DigiSigner Document ID: d9dff40a-7aee-48fd-85bf-5cd21f60df6e

MOUNT CLASSIFICATIONS

MOUNT CLASSIFICATION INFORMATION:

- STANDARDS: TIA-222-G, TIA-222-H, TIA-5053
- MAX STRUCTURE HEIGHT: 400ft
- STRUCTURE CLASS: I OR II
- EXPOSURE CATEGORY: B OR C
- TOPOGRAPHIC CATEGORY: 1
- DESIGN WIND PRESSURE: 135psf
- DESIGN WIND PRESSURE (ICED): 15psf
- DESIGN ICE THICKNESS (RADIAL): 2.75"

MOUNTS EXCEED THE FOLLOWING REQUIREMENTS:

- HEAVY 5
- HEAVY 10
- HEAVY WLL

APPROVED MOUNT CLASSIFICATIONS:

Table 6: Approved Mount Classifications

Part Number	Maximum Antenna Centerline Offset				
	0in	6in	12in	24in	39in
PV-LPPGS-12M-HR2-AP1	M1300R(1250)-4[0]	M1300R(1250)-4[6]	M1100R(1150)-4[12]	M700R(1000)-4[24]	-
PV-LPPGS-12M-HR25-AP1	M1350R(1250)-4[0]	M1350R(1250)-4[6]	M1150R(1200)-4[12]	M750R(1100)-4[24]	-
PV-LPPGS-12M-HR3-AP1	M1350R(1250)-4[0]	M1350R(1250)-4[6]	M1150R(1200)-4[12]	M750R(1100)-4[24]	-
PV-LPPGS-14M-HR2-AP1	M1300R(1200)-4[0]	M1300R(1200)-4[6]	M1100R(1150)-4[12]	M700R(1100)-4[24]	-
PV-LPPGS-14M-HR25-AP1	M1350R(1200)-4[0]	M1350R(1200)-4[6]	M1100R(1150)-4[12]	M700R(1100)-4[24]	-
PV-LPPGS-14M-HR3-AP1	M1350R(1200)-4[0]	M1350R(1200)-4[6]	M1100R(1150)-4[12]	M700R(1100)-4[24]	-
PV-LPPGS-14L-HR2-AP1	M1300R(1200)-4[0]	M1300R(1200)-4[6]	M1100R(1150)-4[12]	M700R(1100)-4[24]	-
PV-LPPGS-14L-HR25-AP1	M1350R(1200)-4[0]	M1350R(1200)-4[6]	M1100R(1150)-4[12]	M700R(1100)-4[24]	-
PV-LPPGS-14L-HR3-AP1	M1350R(1200)-4[0]	M1350R(1200)-4[6]	M1100R(1150)-4[12]	M700R(1100)-4[24]	-
PV-LPPGS-12M-HR2-AP3	M1300R(1250)-4[0]	M1300R(1250)-4[6]	M1100R(1150)-4[12]	M700R(1000)-4[24]	
PV-LPPGS-12M-HR25-AP3	M1900R(1350)-4[0]	M1900R(1350)-4[6]	M1600R(1250)-4[12]	M1100R(1150)-4[24]	-
PV-LPPGS-12M-HR3-AP3	M1850R(1300)-4[0]	M1850R(1300)-4[6]	M1500R(1250)-4[12]	M1050R(1150)-4[24]	-
PV-LPPGS-14M-HR2-AP3	M1300R(1200)-4[0]	M1300R(1200)-4[6]	M1100R(1150)-4[12]	M700R(1100)-4[24]	
PV-LPPGS-14M-HR25-AP3	M1800R(1300)-4[0]	M1800R(1300)-4[6]	M1600R(1250)-4[12]	M1200R(1150)-4[24]	-
PV-LPPGS-14M-HR3-AP3	M1800R(1300)-4[0]	M1800R(1300)-4[6]	M1600R(1250)-4[12]	M1200R(1150)-4[24]	-
PV-LPPGS-14L-HR2-AP3	M1300R(1200)-4[0]	M1300R(1200)-4[6]	M1100R(1150)-4[12]	M700R(1100)-4[24]	
PV-LPPGS-14L-HR25-AP3	M1800R(1300)-4[0]	M1800R(1300)-4[6]	M1600R(1250)-4[12]	M1200R(1150)-4[24]	-
PV-LPPGS-14L-HR3-AP3	M1800R(1300)-4[0]	M1800R(1300)-4[6]	M1600R(1250)-4[12]	M1200R(1150)-4[24]	-
PV-LPPGS-12M-TKB3-AP4	-	-	-	-	M1650R(2750)-4[39]
PV-LPPGS-14M-TKB3-AP4	-	-	-	-	M2400R(3150)-4[39]
PV-LPPGS-14L-TKB3-AP4	-	-	-	-	M2400R(3150)-4[39]

NOTE: ON POLES 3/16" OR LESS THICK, PV-PKBK KICKER KIT IS REQUIRED. SEE SHEETS 3&6

Table 7: Mount Classification Identification Example

M1750R(1450)-4[6]	Used at the beginning of each mount identification.
M**1750**R(1450)-4[6]	The maximum factored horizontal force (**1750**lbf), F, considered for design under extreme wind condition at each mounting pipe location.
M1750**R**(1450)-4[6]	Classification category.
M1750R(**1450**)-4[6]	Maximum factored vertical force (**1450**lbf), Fzi, considered for design under extreme ice condition at each mounting pipe location.
M1750R(1450)-**4**[6]	The mount is designed for (**4**) mounting pipe locations per sector.
M1750R(1450)-4[**6**]	The centerline of the maximum horizontal concentrated force, F, may be offset vertically from the mount centerline by up to **6** inches.

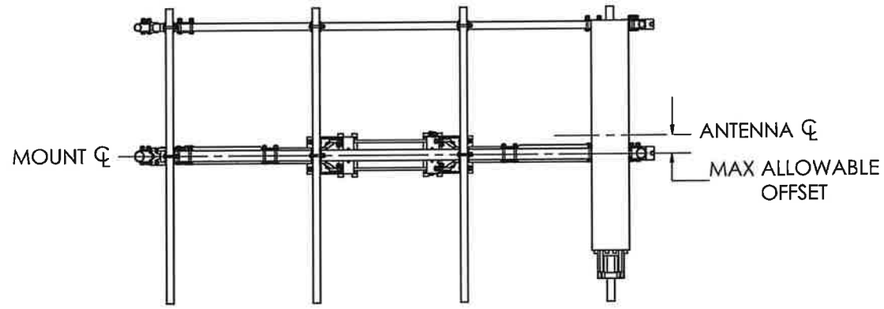

ALLOWABLE OFFSET - SINGLE COLLAR

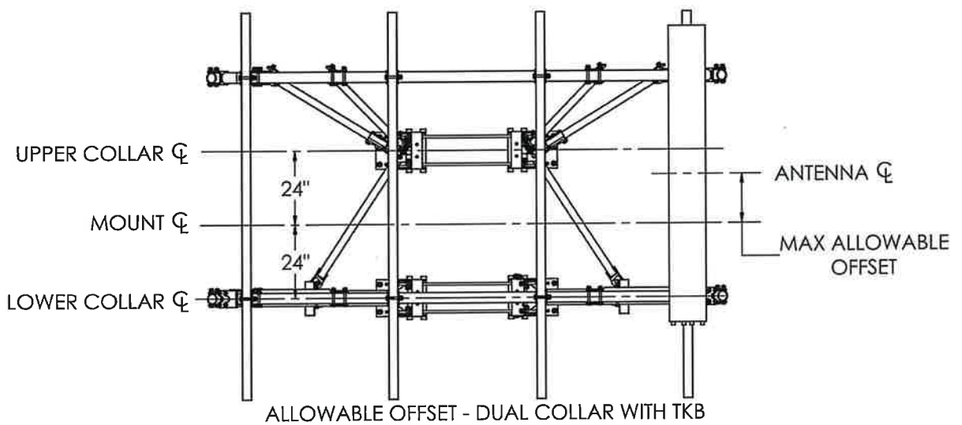

ALLOWABLE OFFSET - DUAL COLLAR WITH TKB

SHEET: 5 OF 16	CATEGORY: 02_Monopole	9	ACC1 REPLACE ACC2, PV-CMX-CG-BO REPLACE 115-242	3/16/21	PERFECTVISION
4/27/2021 SCALE: 1:48	SERIES: 01_Triangular	8	KKGS UPDATE	2/2/21	
DIMENSIONS ARE IN INCHES TOLERANCES U.N.O. HOLES: +1/16", -1/32" ANGULAR: PROFILE ±1/4°, BEND ±2° ALL OTHERS: ±1/16"	TYPE: PV-LPPGS_GUARDIAN	7	REPLACED PKBK WITH PV-KKRS	11/11/20	MONOPOLE GUARDIAN MOUNT
	BY: DJN	6	ADDED ALL THREAD NOTE TO COLLARS	7/27/20	DOCUMENT NUMBER: LPPGS-ENG-01-R9 REV: 9
	CHECKED: SJS	5	ADDED HR2-AP3 CONFIGS	1/20/20	
	STATUS: APPROVED	REV	DESCRIPTION	DATE	

C:\PVWSteel\Catalog\SW Working Files\Engineering Details\

PROPRIETARY AND CONFIDENTIAL THE INFORMATION CONTAINED IN THIS DRAWING IS THE SOLE PROPERTY OF PERFECTVISION. ANY REPRODUCTION IN PART OR AS A WHOLE WITHOUT THE WRITTEN PERMISSION OF PERFECTVISION IS PROHIBITED.

DigiSigner Document ID: d9dff40a-7aee-48fd-85bf-5cd21f60df6e

MOUNT CLASSIFICATIONS

MOUNT CLASSIFICATION INFORMATION:

- STANDARDS: TIA-222-G, TIA-222-H, TIA-5053
- MAX STRUCTURE HEIGHT: 400ft
- STRUCTURE CLASS: I OR II
- EXPOSURE CATEGORY: B OR C
- TOPOGRAPHIC CATEGORY: 1
- DESIGN WIND PRESSURE: 135psf
- DESIGN WIND PRESSURE (ICED): 15psf
- DESIGN ICE THICKNESS (RADIAL): 2.75"

MOUNTS EXCEED THE FOLLOWING REQUIREMENTS:

- HEAVY 5
- HEAVY 10
- HEAVY WLL

APPROVED MOUNT CLASSIFICATIONS:

Table 8: Approved Mount Classifications

		Maximum Antenna Centerline Offset			
		0in	6in	12in	24in
Part Number	PV-LPPGS-12M-HR2-K-AP1	M1400R(1600)-4[0]	M1350R(1600)-4[6]	M1150R(1500)-4[12]	M800R(1500)-4[24]
	PV-LPPGS-12M-HR25-K-AP1	M1450R(1600)-4[0]	M1450R(1600)-4[6]	M1300R(1500)-4[12]	M1000R(1500)-4[24]
	PV-LPPGS-12M-HR3-K-AP1	M1450R(1600)-4[0]	M1450R(1600)-4[6]	M1300R(1500)-4[12]	M1000R(1500)-4[24]
	PV-LPPGS-14M-HR2-K-AP1	M1400R(1600)-4[0]	M1250R(1600)-4[6]	M1100R(1500)-4[12]	M800R(1500)-4[24]
	PV-LPPGS-14M-HR25-K-AP1	M1450R(1600)-4[0]	M1400R(1600)-4[6]	M1250R(1500)-4[12]	M900R(1500)-4[24]
	PV-LPPGS-14M-HR3-K-AP1	M1500R(1600)-4[0]	M1500R(1600)-4[6]	M1300R(1500)-4[12]	M950R(1500)-4[24]
	PV-LPPGS-14L-HR2-K-AP1	M1400R(1600)-4[0]	M1250R(1600)-4[6]	M1100R(1500)-4[12]	M800R(1500)-4[24]
	PV-LPPGS-14L-HR25-K-AP1	M1450R(1600)-4[0]	M1400R(1600)-4[6]	M1250R(1500)-4[12]	M900R(1500)-4[24]
	PV-LPPGS-14L-HR3-K-AP1	M1500R(1600)-4[0]	M1500R(1600)-4[6]	M1300R(1500)-4[12]	M950R(1500)-4[24]
	PV-LPPGS-12M-HR2-K-AP3	M1800R(2000)-4[0]	M1800R(2000)-4[6]	M1600R(1800)-4[12]	M1200R(1800)-4[24]
	PV-LPPGS-12M-HR25-K-AP3	M2050R(2400)-4[0]	M2050R(2400)-4[6]	M1800R(2200)-4[12]	M1300R(2200)-4[24]
	PV-LPPGS-12M-HR3-K-AP3	M2050R(2400)-4[0]	M2050R(2400)-4[6]	M1800R(2200)-4[12]	M1300R(2200)-4[24]
	PV-LPPGS-14M-HR2-K-AP3	M1800R(2000)-4[0]	M1800R(2000)-4[6]	M1600R(1800)-4[12]	M1200R(1700)-4[24]
	PV-LPPGS-14M-HR25-K-AP3	M2050R(2000)-4[0]	M2050R(2000)-4[6]	M1700R(1800)-4[12]	M1300R(1700)-4[24]
	PV-LPPGS-14M-HR3-K-AP3	M2050R(2000)-4[0]	M2050R(1950)-4[6]	M1700R(1800)-4[12]	M1300R(1700)-4[24]
	PV-LPPGS-14L-HR2-K-AP3	M1800R(2000)-4[0]	M1800R(2000)-4[6]	M1600R(1800)-4[12]	M1200R(1700)-4[24]
	PV-LPPGS-14L-HR25-K-AP3	M2050R(2000)-4[0]	M2050R(2000)-4[6]	M1700R(1800)-4[12]	M1300R(1700)-4[24]
	PV-LPPGS-14L-HR3-K-AP3	M2050R(2000)-4[0]	M2050R(1950)-4[6]	M1700R(1800)-4[12]	M1300R(1700)-4[24]

Table 9: Mount Classification Identification Example

M1750R(1450)-4[6]	Used at the beginning of each mount identification.
M**1750**R(1450)-4[6]	The maximum factored horizontal force (**1750**lbf), F, considered for design under extreme wind condition at each mounting pipe location.
M1750**R**(1450)-4[6]	Classification category.
M1750R(**1450**)-4[6]	Maximum factored vertical force (**1450**lbf), Fzi, considered for design under extreme ice condition at each mounting pipe location.
M1750R(1450)-**4**[6]	The mount is designed for (**4**) mounting pipe locations per sector.
M1750R(1450)-4[**6**]	The centerline of the maximum horizontal concentrated force, F, may be offset vertically from the mount centerline by up to **6** inches.

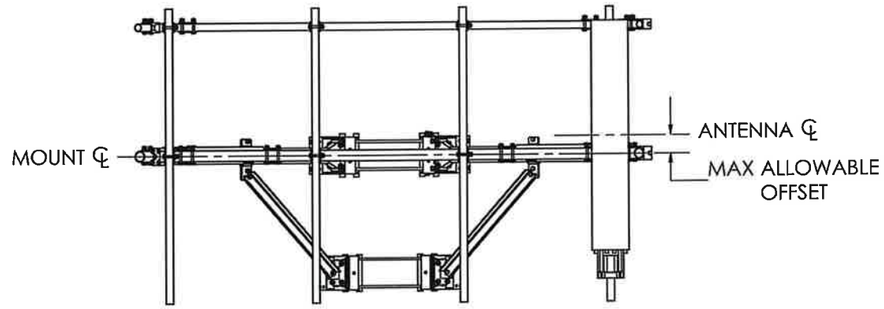

ALLOWABLE OFFSET - SINGLE COLLAR

SHEET 6 OF 16	CATEGORY 02_Monopole	9	ACC1 REPLACE ACC2, PV-CMX-CG-BO REPLACE 115-242	3/16/21	PERFECTVISION
4/27/2021 SCALE 1:48	SERIES 01_Triangular	8	KKGS UPDATE	2/2/21	
DIMENSIONS ARE IN INCHES TOLERANCES U.N.O. HOLES: +1/16", -1/32" ANGULAR: PROFILE±1/4°, BEND ±2° ALL OTHERS: ±1/16"	TYPE PV-LPPGS_GUARDIAN	7	REPLACED PKBK WITH PV-KKRS	11/11/20	MONOPOLE GUARDIAN MOUNT
	BY DJN	6	ADDED ALL THREAD NOTE TO COLLARS	7/27/20	DOCUMENT NUMBER LPPGS-ENG-01-R9 REV 9
	CHECKED SJS	5	ADDED HR2-AP3 CONFIGS	1/20/20	
	STATUS APPROVED	REV	DESCRIPTION	DATE	

C:\PWSteel\Catalog\SW Working Files\Engineering Details\

PROPRIETARY AND CONFIDENTIAL THE INFORMATION CONTAINED IN THIS DRAWING IS THE SOLE PROPERTY OF PERFECTVISION. ANY REPRODUCTION IN PART OR AS A WHOLE WITHOUT THE WRITTEN PERMISSION OF PERFECTVISION IS PROHIBITED.

DigiSigner Document ID: d9dff40a-7aee-48fd-85bf-5cd21f60df6e

STANDARD POLE

PV-RM1045-GS

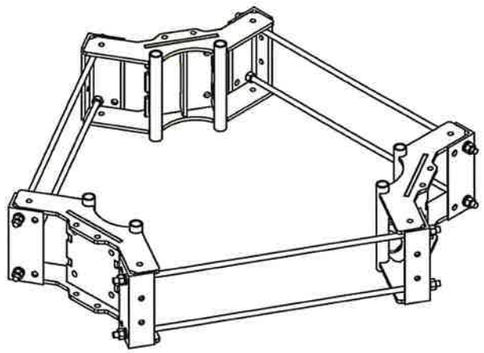

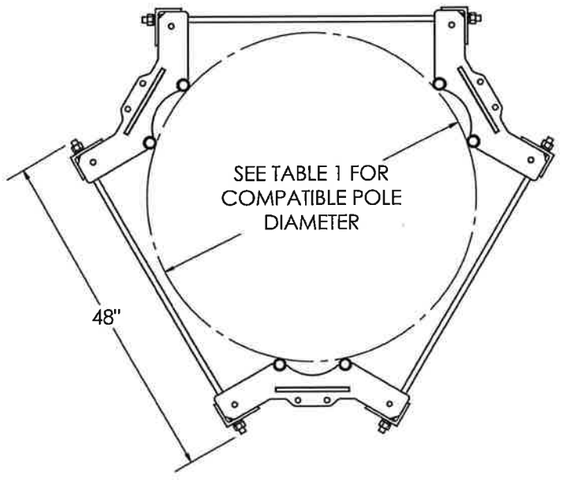

LARGE POLE

PV-RM3060-GS

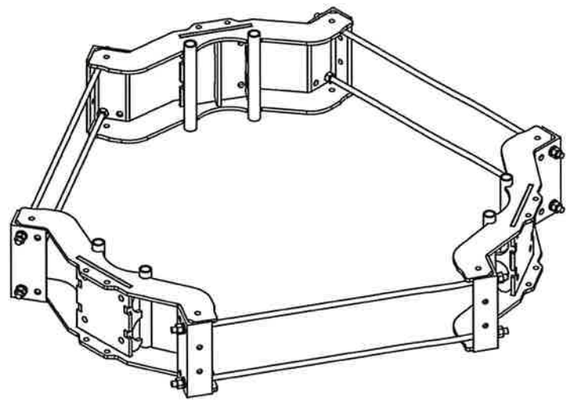

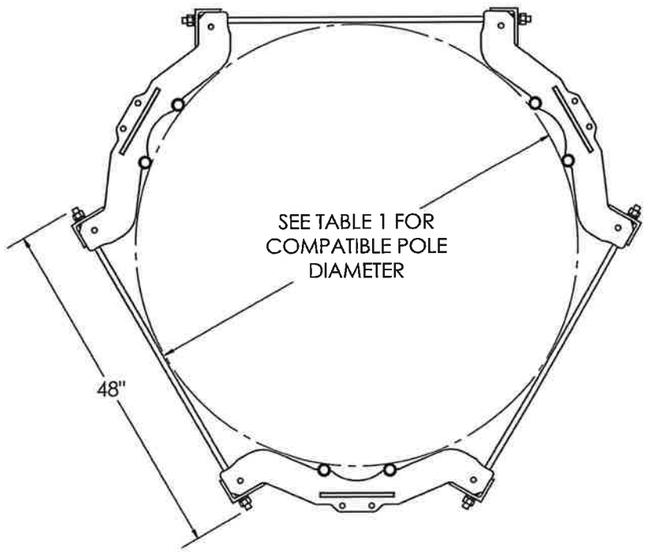

COLLAR MOUNT INSTALLATION

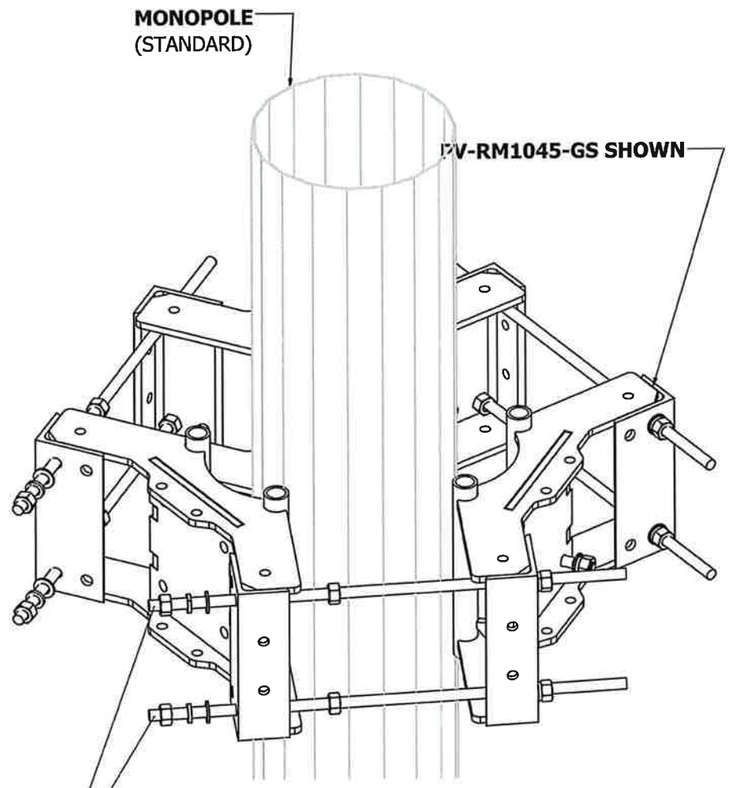

WHEN INSTALLED ADJACENT TO CLIMB PATH REMOVE EXCESS ALL-THREAD TO PROMOTE CLIMBER SAFETY AND PREVENT CONTACT WITH SAFETY CLIMB WIRE ROPE.
MINIMUM 1" REQUIRED BEYOND HEX NUT

ROD CUT LENGTH

Table 10: Threaded Rod Cut Length (in)

Pole OD (in)	PV-RM1045-GS	PV-RM3060-GS
10	14	-
15	19.5	-
20	24.5	-
25	29	-
30	33.5	24
35	38	26.5
40	42.5	31
45	48	35.5
50	-	40
55	-	44
60	-	48

C:\PVMSteel\Catalog\SW Working Files\Engineering Details\

SHEET: 7 OF 16		CATEGORY: 02_Monopole	9	ACC1 REPLACE ACC2, PV-CMX-CG-BO REPLACE 115-242	3/16/21
		SERIES: 01_Triangular	8	KKGS UPDATE	2/2/21
4/27/2021	SCALE: 1:20	TYPE: PV-LPPGS_GUARDIAN	7	REPLACED PKBK WITH PV-KKRS	11/11/20
DIMENSIONS ARE IN INCHES TOLERANCES U.N.O. HOLES: +1/16", -1/32" ANGULAR: PROFILE±1/4°, BEND±2° ALL OTHERS: ±1/16"		BY: DJN	6	ADDED ALL THREAD NOTE TO COLLARS	7/27/20
		CHECKED: SJS	5	ADDED HR2-AP3 CONFIGS	1/20/20
		STATUS: APPROVED	REV	DESCRIPTION	DATE

PERFECTVISION

MONOPOLE GUARDIAN MOUNT

DOCUMENT NUMBER: LPPGS-ENG-01-R9 | REV: 9

PROPRIETARY AND CONFIDENTIAL THE INFORMATION CONTAINED IN THIS DRAWING IS THE SOLE PROPERTY OF PERFECTVISION. ANY REPRODUCTION IN PART OR AS A WHOLE WITHOUT THE WRITTEN PERMISSION OF PERFECTVISION IS PROHIBITED.

DigiSigner Document ID: d9dff40a-7aee-48fd-85bf-5cd21f60df6e

PV-XP-DC

DUALCROSS 90° CROSSOVER BRACKET

Table 11: Crossover Configurations and Capacities

Part Number	Weight	Pipe 1 Size (Vertical)	Pipe 2 Size (Horizontal)	Pipe 1 Bolt Size	Pipe 2 Bolt Size	Available Sliding Strength (Φ=0.7)			Available Torsional Strength (Φ=0.7)		Available Lateral Twist Strength (Φ=0.9)
						ΦRns (X)	ΦRns (Y)	ΦRns (Z)	ΦRnr (X)	ΦRnr (Y)	ΦRnl (Z)
	lbs	*in*	*in*	*in*	*in*	*kip*	*kip*	*kip*	*kip-in*	*kip-in*	*kip-in*
PV-XP-DC-2020	6.1	Ø2.375	Ø2.375	Ø5/8 x 4-1/2	Ø5/8 x 4-1/2	3.85	3.85	Fixed	6.0	6.0	14.0
PV-XP-DC-2025	7.0	Ø2.375	Ø2.875	Ø5/8 x 4-1/2	Ø5/8 x 5	3.85	3.85	Fixed	6.0	6.0	14.0
PV-XP-DC-2030	8.1	Ø2.375	Ø3.5	Ø5/8 x 4-1/2	Ø5/8 x 5-1/2	3.85	3.85	Fixed	6.8	6.0	14.0
PV-XP-DC-2525	8.0	Ø2.875	Ø2.875	Ø5/8 x 5	Ø5/8 x 5	3.85	3.85	Fixed	6.0	6.0	20.0
PV-XP-DC-2530	9.3	Ø2.875	Ø3.5	Ø5/8 x 5	Ø5/8 x 5-1/2	3.85	3.85	Fixed	6.8	6.0	20.0
PV-XP-DC-3030	10.7	Ø3.5	Ø3.5	Ø5/8 x 5-1/2	Ø5/8 x 5-1/2	3.85	3.85	Fixed	6.8	6.8	27.0
PV-XP-DC-3040	13.1	Ø3.5	Ø4.5	Ø5/8 x 5-1/2	Ø5/8 x 6-1/2	3.85	3.85	Fixed	6.8	6.8	27.0

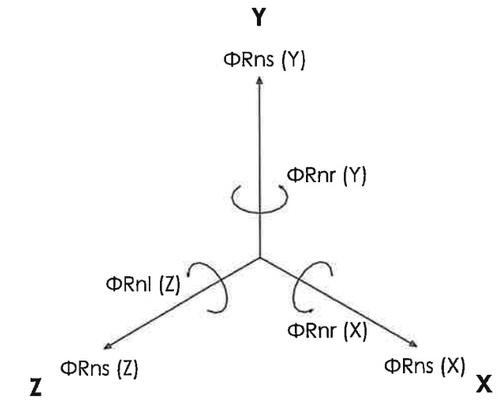

NOTES:

- CAPACITY VALUES EXPERIMENTALLY DETERMINED
- INSTALLATION REQUIREMENTS:
  - MINIMUM BOLT TORQUE: 100 FT-LBS
  - CLEAN, DRY ASSEMBLY
  - GALVANIZED BRACKET AND HARDWARE
  - COLORED WAX COATING ON NUTS
- MATERIALS
  - BRACKET: A36 HDG
  - HARDWARE: A325 HDG BOLT, A563DH NUT

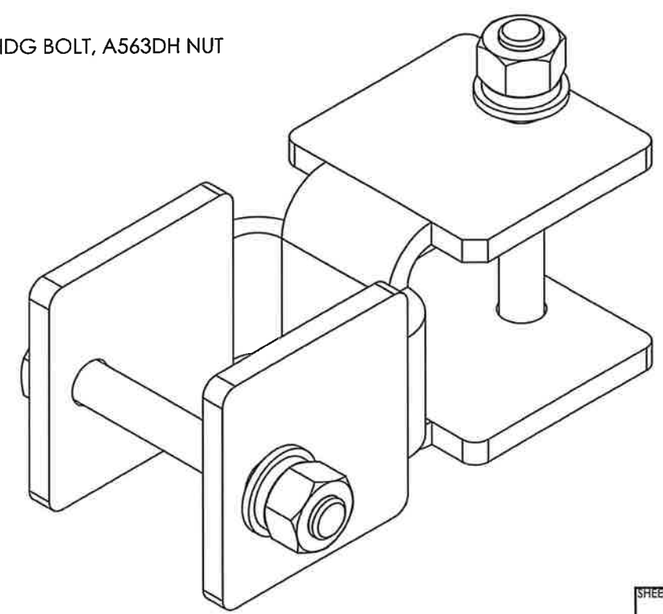

PV-XP-DC
DUALCROSS 90° CROSSOVER

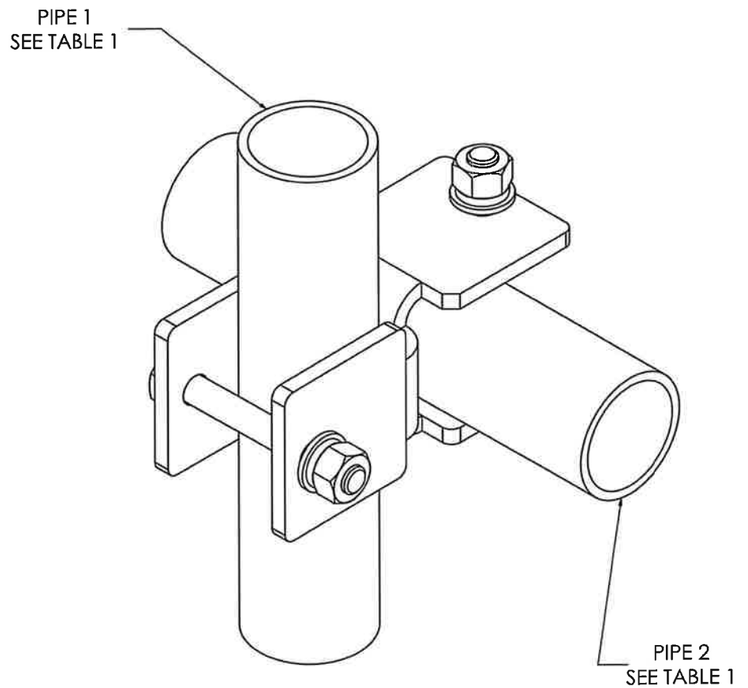

SHEET: 8 OF 16		CATEGORY: 02_Monopole	9	ACC1 REPLACE ACC2, PV-CMX-CG-BO REPLACE 115-242	3/16/21
		SERIES: 01_Triangular	8	KKGS UPDATE	2/2/21
4/27/2021	SCALE: 1:2	TYPE: PV-LPPGS_GUARDIAN	7	REPLACED PKBK WITH PV-KKRS	11/11/20
DIMENSIONS ARE IN INCHES TOLERANCES U.N.O. HOLES: +1/16", -1/32" ANGULAR: PROFILE±1/4°, BEND±2° ALL OTHERS: ±1/16"		BY: DJN	6	ADDED ALL THREAD NOTE TO COLLARS	7/27/20
		CHECKED: SJS	5	ADDED HR2-AP3 CONFIGS	1/20/20
		STATUS: APPROVED	REV	DESCRIPTION	DATE

PERFECTVISION®

MONOPOLE GUARDIAN MOUNT

DOCUMENT NUMBER: LPPGS-ENG-01-R9 | REV: 9

C:\PWSteel\Catalog\SW Working Files\Engineering Details\

PROPRIETARY AND CONFIDENTIAL THE INFORMATION CONTAINED IN THIS DRAWING IS THE SOLE PROPERTY OF PERFECTVISION. ANY REPRODUCTION IN PART OR AS A WHOLE WITHOUT THE WRITTEN PERMISSION OF PERFECTVISION IS PROHIBITED.

DigiSigner Document ID: d9dff40a-7aee-48fd-85bf-5cd21f60df6e

PV-XP-DC

DUALCROSS 90° CROSSOVER BRACKET

PRE-INSTALL ASSEMBLY:

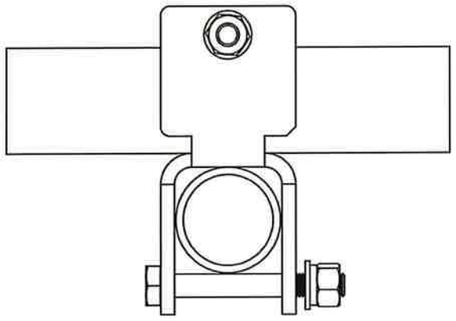

TOP

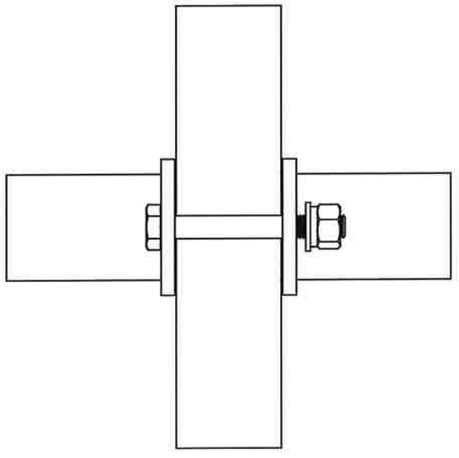

FRONT

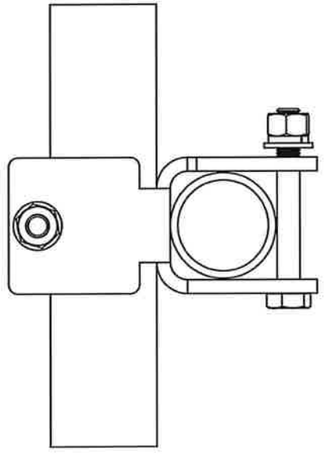

SIDE

POST-INSTALL ASSEMBLY:

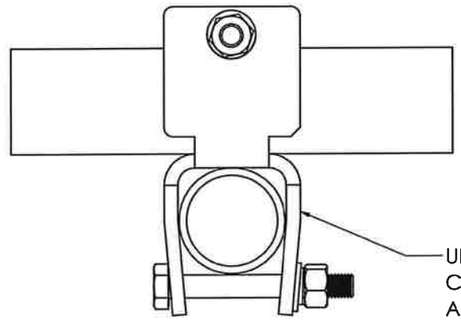

TOP

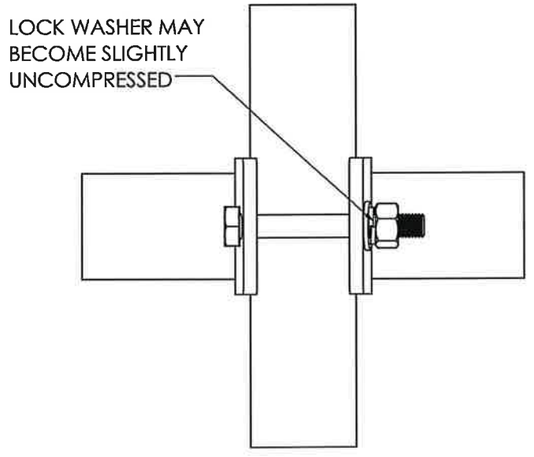

FRONT

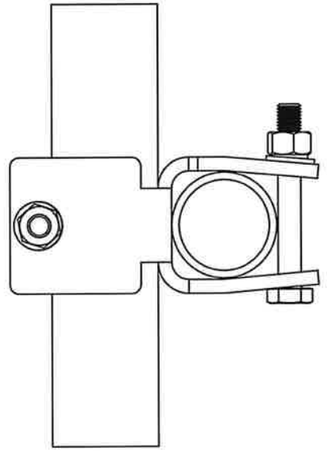

SIDE

SHEET: 9 OF 16		CATEGORY: 02_Monopole	9	ACC1 REPLACE ACC2, PV-CMX-CG-BO REPLACE 115-242	3/16/21
4/27/2021	SCALE: 1:4	SERIES: 01_Triangular	8	KKGS UPDATE	2/2/21
DIMENSIONS ARE IN INCHES TOLERANCES U.N.O. HOLES: +1/16", -1/32" ANGULAR: PROFILE±1/4°, BEND±2° ALL OTHERS: ±1/16"		TYPE: PV-LPPGS_GUARDIAN	7	REPLACED PKBK WITH PV-KKRS	11/11/20
		BY: DJN	6	ADDED ALL THREAD NOTE TO COLLARS	7/27/20
		CHECKED: SJS	5	ADDED HR2-AP3 CONFIGS	1/20/20
		STATUS: APPROVED	REV	DESCRIPTION	DATE

PERFECTVISION

MONOPOLE GUARDIAN MOUNT

DOCUMENT NUMBER: LPPGS-ENG-01-R9 | REV: 9

C:\PWSteel\Catalog\SW Working Files\Engineering Details\

PROPRIETARY AND CONFIDENTIAL THE INFORMATION CONTAINED IN THIS DRAWING IS THE SOLE PROPERTY OF PERFECTVISION. ANY REPRODUCTION IN PART OR AS A WHOLE WITHOUT THE WRITTEN PERMISSION OF PERFECTVISION IS PROHIBITED.

PRE-25-13: 180 ANETS DRIVE
APPLICATION SUMMARY

Applicant:	Crown Castle GT Company, LLC
Site Location:	180 Anets Drive
Requested Action:	Special Permit Renewal to Allow Personal Wireless Service Antennas on Tower- Style Antenna Support Structure
Proposal:	Special permit for the operation of the wireless antenna equipment on a tower style structure
Existing Zoning & Land Use:	IB Institutional Building; property owned by Park District
Surrounding Zoning & Land Use:	North: OS Open Space South: I-1 Restricted Industrial & ICS Industrial Commercial Services East: OS Open Space West: I-1 Restricted Industrial
Comprehensive Plan Designation:	Government Facility

ZONING MAP

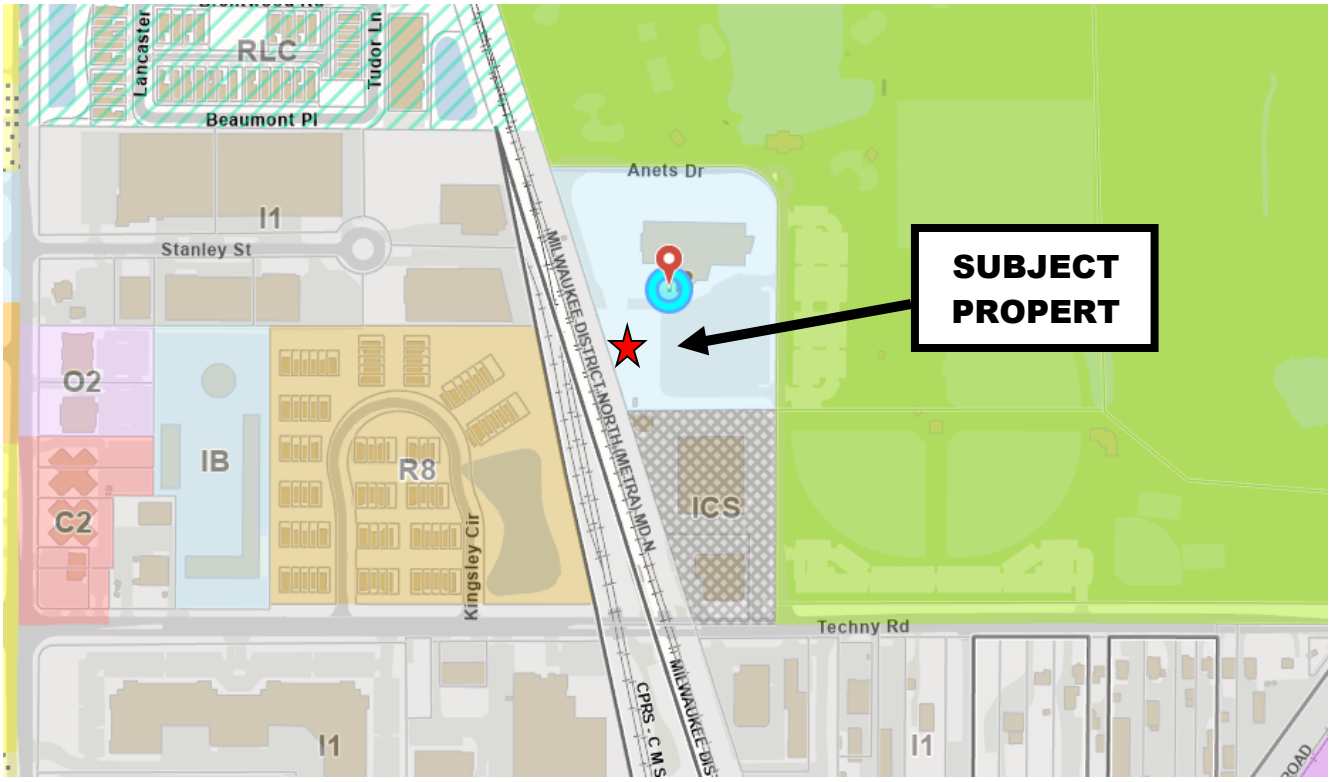

COMPREHENSIVE PLAN MAP

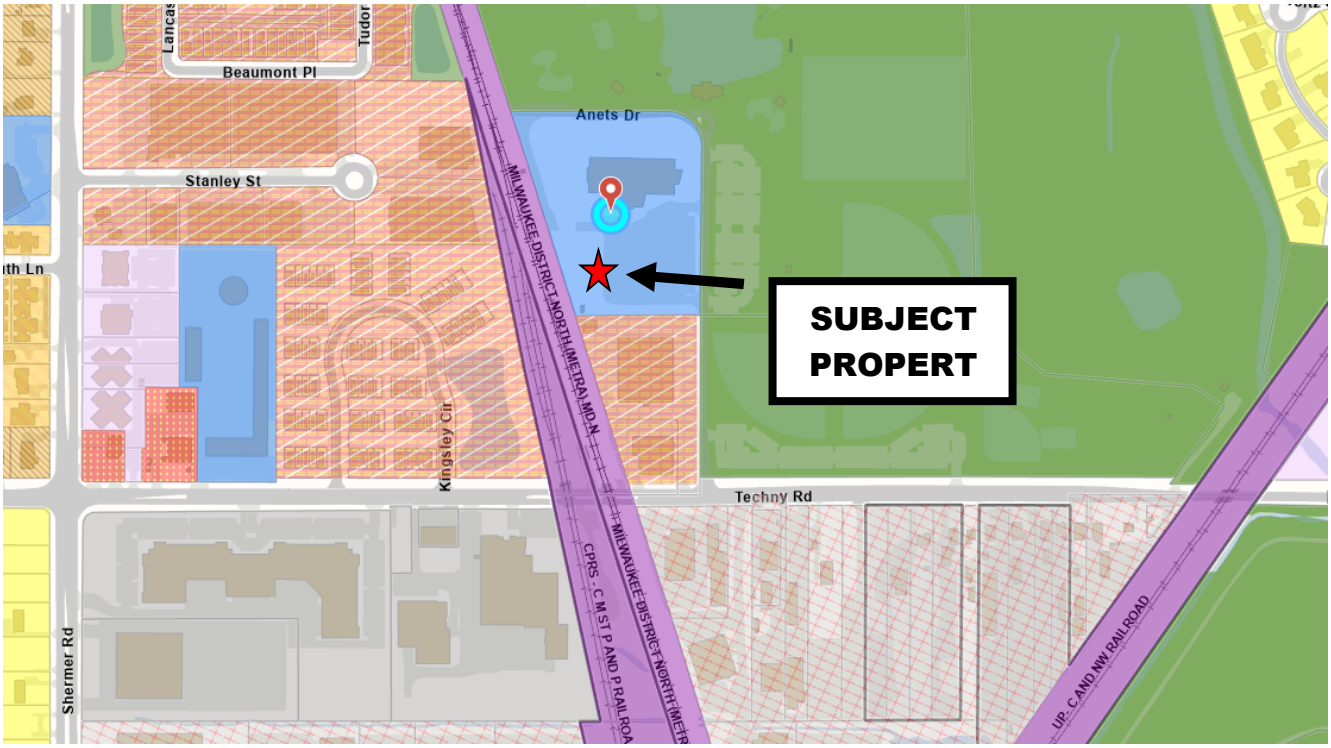

Legend

- Open Space & Outdoor Recreation
- Single Family
- Single Family Large Lot
- Multi-Family up to 6 DUA
- Multi-Family 6-9 DUA
- Multi-Family 9-15 DUA
- Multi-Family over 15 DUA
- Senior or Special Residential
- Government Facility
- Institutional Facility
- Neighborhood Office
- Neighborhood Edge 1
- Neighborhood Edge 2
- Office - Professional
- Office - Corporate/Corridor
- Community Retail
- Major Retail
- Industrial & Commercial Service
- General Industrial, Warehouse & Office
- Major Industrial/Distribution
- Transportation, Comm. & Utilities
- Village Center Mixed Use
- Techny Area Multi-Use
- Major Corridor Multi-Use
- Techny Area

GISConsortium | 180 Anets



0 500 1000 ft

Print Date: 7/21/2025

Notes

Disclaimer: The GIS Consortium and MGP Inc. are not liable for any use, misuse, modification or disclosure of any map provided under applicable law. This map is for general information purposes only. Although the information is believed to be generally accurate, errors may exist and the user should independently confirm for accuracy. The map does not constitute a regulatory determination and is not a base for engineering design. A Registered Land Surveyor should be consulted to determine precise location boundaries on the ground.

GISConsortium | 180 Anets



0 450 900 ft

Print Date: 7/21/2025

Notes

Disclaimer: The GIS Consortium and MGP Inc. are not liable for any use, misuse, modification or disclosure of any map provided under applicable law. This map is for general information purposes only. Although the information is believed to be generally accurate, errors may exist and the user should independently confirm for accuracy. The map does not constitute a regulatory determination and is not a base for engineering design. A Registered Land Surveyor should be consulted to determine precise location boundaries on the ground.


Anets Dr
Anets Dr
Wrapped, LLC



1928113114

Doc# 1928113114 Fee $88.00

EDWARD M. MOODY

COOK COUNTY RECORDER OF DEEDS

DATE: 10/09/2019 11:35 AM PG: 1 OF 8

Ordinance 2019-51

BE IT ORDAINED by the President and Board of Trustees of the Village of Northbrook, County of Cook and State of Illinois THAT:

An Ordinance Granting a Special Permit to Allow Personal Wireless Services Antenna Located on a Tower-Style Structure in Excess of District Height Limitations and a Variation to Reduce Required Distancing Between the Tower and Existing Nearby Structure (AT&T – 180 Anets Drive) (Plan Commission Docket No. PCD-19-08)

shall be, and is hereby, adopted as follows:

Section 1. BACKGROUND

Mastec Network Solutions, on behalf of AT&T, ("***Applicant***") is the lessee of a portion of the property located at 180 Anets Drive ("***Subject Property***") in the Village of Northbrook. The Subject Property was annexed to the Village in 2012 pursuant to Ordinance 2012-011. The Subject Property was improved with three pre-existing wireless service tower structures at the time it was annexed. The Applicant has requested a special permit to allow for the expansion of personal wireless service antennas on an existing tower-style structure owned and operated by Crown Castle USA Inc. ("***Antenna Facilities***") located on an existing tower on the Property in excess of the district height limits (Northbrook SIC Code No. 4810.02). The Subject Property is zoned in the IB Institutional Building District and is owned by the Northbrook Park District ("***Owner***"). The Owner has consented to the Applicant's request for the special permit.

After recording, return to
Recorder's Box 337

Section 2. DESCRIPTION OF PROPERTY

The Property is commonly known as 180 Anets Drive, and is legally described in ***Exhibit A*** attached to and, by this reference, made a part of this Ordinance. The Property is located in the IB Institutional Building District.

Section 3. PUBLIC HEARING

A public hearing to consider the Applicant's request for the renewal of a special permit was duly advertised on July 18, 2019 in the *Northbrook Star* and was held at the Plan Commission's regular meeting on August 6, 2019 during which time the Plan Commission adopted Resolution No. 19-PC-08 recommending approval of Docket No. PCD-19-08.

Section 4. SPECIAL PERMIT.

Subject to and contingent upon the conditions, restrictions, and provisions set forth in Section 6 of this Ordinance, a special permit to allow a Personal Wireless Services Antenna Located on a Tower-Style Structures in Excess of District Height Limitations (Northbrook SIC Code No. 4810.02) is hereby granted for the benefit of the Applicant in accordance with and pursuant to Subsection 11-602 E1 of the Code and the home rule powers of the Village.

Section 5. VARIATION.

Subject to, and contingent upon, the conditions, restrictions, and provisions set forth in Section 6 of this Ordinance, a variation to reduce the required distancing between the existing personal wireless service antenna tower and nearby structures from 110' to 69' shall be, and is hereby, granted to the Applicant in accordance with and pursuant to Section 11-503 of the Zoning Code and the home rule powers of the Village of Northbrook.

Section 6. SPECIAL PERMIT CONDITIONS.

The special permit granted in Section 4 of this Ordinance shall be, and is hereby, expressly subject to and contingent upon each of the following conditions, restrictions, and provisions:

A. Number of Antennas. The Antenna Facilities shall be allowed to add one additional platform on the existing tower structure consisting of no more than eight additional panel antennas.

B. Location of Antenna Facilities. The Antenna Facilities shall be mounted no more than 88' from grade on the existing tower structure.

Section 7. FAILURE TO COMPLY WITH CONDITIONS.

Upon the failure or refusal of the Applicant to comply with any or all of the conditions, restrictions or provisions of this Ordinance, the special permit granted in Section 4, and the variation granted in Section 5, of this Ordinance shall, at the sole discretion of the Village Board of Trustees, by ordinance duly adopted, be revoked and become null and void; provided however that the Village Board of Trustees may not so revoke the special permit unless it shall first provide the Applicant and the Owner with two months advance written notice of the reasons for revocation and an opportunity to be heard at a regular meeting of the Board of Trustees. In the event of revocation, the development and use of the Property shall be governed solely by the regulations of the IB Institutional Building District, as the same may, from time to time, be amended. Further, in the event of such revocation of the special permit, the Village Manager and Village Attorney are hereby authorized and directed to bring such zoning

enforcement action as may be appropriate under the circumstances. The Applicant acknowledges that public notices have been given and public hearings have been held with respect to the adoption of this renewal Ordinance, has considered the possibility of the revocation provided for in this Section, and agrees not to challenge any such revocation provided for in this Section, and agrees not to challenge any such revocation on the grounds of any procedural infirmity or any denial of any procedural right, provided that the notice to the Applicant required by this Section is given.

Section 8. TERM.

The Special Permit granted in Section 4 of this Ordinance shall automatically expire, and the designated use shall terminate after a period of two years from the effective date of this Ordinance unless prior to such date, the Applicant, with the written consent of the Owner, shall have requested, and the Corporate Authorities shall have granted, a renewal in accordance with Subsection 11-602 K of the Zoning Code.

Section 9. BINDING EFFECT; TRANSFERABILITY.

The privileges, obligations, and provisions of each and every Section of this Ordinance, are for, and shall be binding on, the Applicant operating the Facility, except as otherwise expressly provided in this Ordinance. Nothing in this Ordinance shall be deemed to allow this Ordinance to be transferred to any person, or entity unless and until (a) such person, or entity ("***Transferee***") executes and files with the Village Clerk an unconditional agreement and consent to accept and abide by each and all of the terms, conditions, and limitations set forth in this Ordinance in a form acceptable to the Village Manager and (b) the Board of Trustees has approved such transfer by resolution duly adopted.

Section 10. EFFECTIVE DATE.

A. This Ordinance shall be effective only upon the occurrence of all of the following events:

i. passage by the Board of Trustees of the Village of Northbrook by a majority vote in the manner required by law;

ii. publication in pamphlet form in the manner required by law;

iii. the filing by the Applicant with the Village Clerk of an unconditional agreement and consent to accept and abide by each and all of the terms, conditions, and limitations set forth in this Ordinance. Said unconditional agreement and consent shall be executed by the Applicant and the Owner and shall be in the form of ***Exhibit B***, attached to and made a part of this Ordinance by this reference; and

iv. recordation of this Ordinance, together with such exhibits as the Village Clerk shall deem appropriate for recordation, with the Cook County Recorder of Deeds. The Applicant shall bear the full cost of such recordation.

B. In the event that the Applicant does not file with the Village Clerk a fully executed copy of the unconditional agreement and consent referenced in Section 10.A.iii of this Ordinance within 90 days of the date of passage of this Ordinance by the corporate authorities, the corporate authorities shall have the right, in their sole discretion, to declare this Ordinance null and void and of no force or effect.

Adopted: 8/13/2019

RESULT:	**ADOPTED BY CONSENT VOTE [5 TO 0]**
MOVER:	Jason Han, Trustee
SECONDER:	Bob Israel, Trustee
AYES:	Israel, Collison, Han, Ross, Hebl
ABSENT:	Kathryn Ciesla
RECUSED:	Sandra Frum

ATTEST:

/s/ Sandra E. Frum
Village President

/s/ Debra J. Ford
Village Clerk

I hereby certify this to be a true and exact copy of the original.

10-7-19
Date

Village Clerk

VILLAGE OF NORTHBROOK
COOK COUNTY, ILLINOIS
CORPORATE SEAL

EXHIBIT A

Legal Description

EXISTING LEASE AREA DESCRIPTION PER SURVEY PREPARED BY STONELAKE SURVEY COMPANY, LTD DATED 9/10/97
THAT PART OF THE NORTHWEST QUARTER OF SECTION 15, TOWNSHIP 42 NORTH, RANGE 12 EAST OF THE THIRD PRINCIPAL MERIDIAN, DESCRIBED AS FOLLOWS: COMMENCING AT A POINT ON THE NORTH LINE OF THE SOUTH 525.40 FEET OF LOT 19 IN ASSESSOR'S DIVISION OF SAID SECTION 15, AT THE EASTERLY RIGHT OF WAY LINE OF THE CHICAGO, MILWAUKEE, ST. PAUL AND PACIFIC RAILROAD; THENCE NORTH 90 DEGREES EAST ALONG SAID NORTH LINE, 25.54 FEET; THENCE NORTH 00 DEGREES 00 MINUTES EAST, 47.96 FEET TO THE POINT OF BEGINNING; THENCE NORTH 01 DEGREES 25 MINUTES 05 SECONDS WEST, 20.00 FEET; THENCE SOUTH 88 DEGREES 34 MINUTES 55 SECONDS WEST, 30.00 FEET; THENCE SOUTH 01 DEGREES 25 MINUTES 05 SECONDS EAST, 20.00 FEET; THENCE NORTH 88 DEGREES 34 MINUTES 55 SECONDS EAST, 30.00 FEET TO THE POINT OF BEGINNING , ALL IN COOK COUNTY, ILLINOIS AND CONTAINING 600 SQUARE FEET.

EXISTING 12' ACCESS EASEMENT DESCRIPTION PER SURVEY PREPARED BY STONELAKE SURVEY COMPANY, LTD DATED 9/10/97
THAT PART OF THE NORTHWEST QUARTER OF SECTION 15, TOWNSHIP 42 NORTH, RANGE 12 EAST OF THE THIRD PRINCIPAL MERIDIAN, DESCRIBED AS FOLLOWS: COMMENCING AT A POINT ON THE NORTH LINE OF THE SOUTH 525.40 FEET OF LOT 19 IN ASSESSOR'S DIVISION OF SAID SECTION 15, AT THE EASTERLY RIGHT OF WAY LINE OF THE CHICAGO, MILWAUKEE, ST. PAUL AND PACIFIC RAILROAD; THENCE NORTH 90 DEGREES EAST ALONG SAID NORTH LINE, 372.00 FEET TO THE POINT OF BEGINNING; THENCE NORTH 00 DEGREES 00 MINUTES WEST, 470.00 FEET TO A POINT OF CURVE; THENCE NORTHWESTERLY ALONG A CURVE CONVEX NORTHEASTERLY AND HAVING A RADIUS OF 114.00 FEET, A DISTANCE OF 179.07 FEET; THENCE NORTH 90 DEGREES WEST, 350.0 FEET TO A POINT OF CURVE; THENCE SOUTHWESTERLY ALONG A CURVE CONVEX NORTHWESTERLY AND HAVING A RADIUS OF 52.00 FEET, A DISTANCE OF 97.52 FEET; THENCE SOUTH 17 DEGREES 27 MINUTES EAST, 322.53 FEET; THENCE SOUTH 15 DEGREES 45 MINUTES 40 SECONDS EAST, 147.04 FEET; THENCE SOUTH 01 DEGREES 25 MINUTES 05 SECONDS EAST, 20.00 FEET; THENCE NORTH 90 DEGREES WEST, 7.32 FEET; THENCE NORTH 15 DEGREES 45 MINUTES 40 SECONDS WEST, 164.25 FEET; THENCE NORTH 17 DEGREES 27 MINUTES WEST, 322.37 FEET TO A POINT OF CURVE; THENCE NORTHEASTERLY ALONG A CURVE CONVEX NORTHWESTERLY AND HAVING A RADIUS OF 64.00 FEET, A DISTANCE OF 120.02 FEET; THENCE SOUTH 90 DEGREES EAST, 350.00 FEET TO A POINT OF CURVE; THENCE SOUTHEASTERLY ALONG A CURVE CONVEX NORTHEASTERLY AND HAVING A RADIUS OF 126.00 FEET, A DISTANCE OF 197.92 FEET; THENCE SOUTH 00 DEGREES 00 MINUTES EAST, 470.00 FEET; THENCE SOUTH 90 DEGREES WEST, 12.00 FEET TO THE POINT OF BEGINNING, ALL IN COOK COUNTY, ILLINOIS AND CONTAINING 19,140 SQUARE FEET.

EXISTING 8' UTILITY EASEMENT DESCRIPTION PER SURVEY PREPARED BY STONELAKE SURVEY COMPANY, LTD DATED 9/10/97
THAT PART OF THE NORTHWEST QUARTER OF SECTION 15, TOWNSHIP 42 NORTH, RANGE 12 EAST OF THE THIRD PRINCIPAL MERIDIAN, DESCRIBED AS FOLLOWS: COMMENCING AT A POINT ON THE NORTH LINE OF THE SOUTH 525.40 FEET OF LOT 19 IN ASSESSOR'S DIVISION OF SAID SECTION 15, AT THE EASTERLY RIGHT OF WAY LINE OF THE CHICAGO, MILWAUKEE, ST. PAUL AND PACIFIC RAILROAD; THENCE NORTH 90 DEGREES EAST ALONG SAID NORTH LINE, 61.00 FEET; THENCE NORTH 00 DEGREES 00 MINUTES EAST, 4.00 FEET TO THE POINT OF BEGINNING, BEING THE CENTERLINE OF A 8.00 FOOT EASEMENT, 4.00 FEET EITHER SIDE OF THE FOLLOWING DESCRIBED LINE; THENCE SOUTH 90 DEGREES WEST, 22.00 FEET; THENCE NORTH 00 DEGREES 00 MINUTES EAST, 54.00 FEET; THENCE SOUTH 90 DEGREES WEST, 13.71 FEET TO THE END OF EASEMENT, ALL IN COOK COUNTY, ILLINOIS AND CONTAINING 718 SQUARE FEET.

Commonly known as: 180 Anets Drive, Northbrook, IL 60062

PIN 04-15-101-029-0000

EXHIBIT B

Unconditional Agreement and Consent of Applicant

TO: The Village of Northbrook, Illinois (***"Village"***):

WHEREAS, Mastec Network Solutions LLC on behalf of AT&T ("***Applicant***"), is the lessee of a portion of the property located at 180 Anets Drive, Northbrook, Illinois ("***Property***") and the Northbrook Park District, is the owner of the Property ("***Owner***"); and

WHEREAS, the Property is located within the IB Institutional Building District, in which the erection and operation of wireless services antennas in excess of district height limitations is allowed by special permit; and

WHEREAS, the Applicant has applied for a Special Permit allowing for the continued operation of the Antenna Facilities, in excess of the IB Institutional Building District Height Limitations (Northbrook SIC Code No. 4810.02) on the Property on an existing tower structure owned and operated by Crown Castle USA Inc.; and

WHEREAS, Ordinance No. 19-51, adopted by the President and Board of Trustees of the Village of Northbrook on August 13, 2019 ("***Ordinance***"), grants approval of such renewal, subject to certain conditions, for the benefit of the Applicant; and

WHEREAS, the Applicant desires to evidence to the Village its unconditional agreement and consent to accept and abide by each of the terms, conditions, and limitations set forth in said Ordinance, and the Owner desires to evidence its consent to recording the Ordinance against the Property;

NOW THEREFORE, the Applicant and the Owner do hereby agree and covenant as follows:

1. The Applicant shall, and does hereby unconditionally agree to, accept, consent to and abide by all of the terms, conditions, restrictions, and provisions of that certain Ordinance No. 19-51, adopted by the Village Board of Trustees on August 13, 2019.

2. The Applicant acknowledges and agrees that the Village is not and shall not be, in any way, liable for any damages or injuries that may be sustained as a result of the Village's review and approval of any plans for the Property, or the issuance of any permits for the use and development of the Property, and that the Village's review and approval of any such plans and issuance of any such permits does not, and shall not, in any way, be deemed to insure the Applicant against damage or injury of any kind and at any time.

3. The Applicant acknowledges that the public notices and hearings have been properly given and held with respect to the adoption of the Ordinance, has considered the possibility of the revocation provided for in the Ordinance, and agrees not to challenge any such revocation on the grounds of any procedural infirmity or any denial of any procedural right, provided that the notice to the Applicant required by Section 7 of the Ordinance is given.

4. The Applicant agrees to and does hereby hold harmless and indemnify the Village, the Village's corporate authorities, and all Village elected and appointed officials, officers, employees, agents, representatives, and attorneys, from any and all claims

that may, at any time, be asserted against any of such parties in connection with (a) the Village's review and approval of any plans and issuance of any permits, (b) the procedures followed in connection with the adoption of the Ordinance, (c) the development, construction, maintenance, and use of the Property, and (d) the performance by the Applicant of its obligations under this Unconditional Consent and Agreement.

5. The Applicant shall, and does hereby agree to, pay all expenses incurred by the Village in defending itself with regard to any and all of the claims mentioned in this Unconditional Consent and Agreement. These expenses shall include all out-of-pocket expenses, such as attorneys' and experts' fees, and shall also include the reasonable value of any services rendered by any employees of the Village.

6. The Owner warrants and represents to the Village that it owns fee simple title to the Property, the Applicant warrants and represents that it has a valid and effective site license for the Property and each consents to the recording of the Ordinance against the Property.

MASTEC NETWORK SOLUTIONS, LLC

SUBSCRIBED and **SWORN** to
before me this 11th day of
September, 2019.

By: _____
Signature

_____
Notary Public

By: DANIEL DELLAPIA
Print Name

ANTHONY MISTRETTA
Official Seal
Notary Public - State of Illinois
My Commission Expires Aug 29, 2022

Its: VP | GM

ATTEST:

NORTHBROOK PARK DISTRICT

By: _____
Signature

By: _____
Signature

By: Marilena Tanasescu
Print Name

By: Edward T. Dalton
Print Name

Its: Notary Public

Its: Director of Parks & Properties

SUBSCRIBED and **SWORN** to
before me this 23rd day of
September, 2019.

OFFICIAL SEAL
MARILENA TANASESCU
NOTARY PUBLIC - STATE OF ILLINOIS
MY COMMISSION EXPIRES:04/05/20

Ordinance 2019-51

An Ordinance Granting a Special Permit to Allow Personal Wireless Services Antenna Located on a Tower-Style Structure in Excess of District Height Limitations and a Variation to Reduce Required Distancing Between the Tower and Existing Nearby Structure (AT&T – 180 Anets Drive) (Plan Commission Docket No. PCD-19-08)

Passed by the Board of Trustees, 8/13/2019
Printed and Published 8/14/2019

Printed and Published in Pamphlet Form
by Authority of the
President and Board of Trustees
VILLAGE OF NORTHBROOK
COOK COUNTY, ILLINOIS

I hereby certify that this document
was properly published on the date
stated above.

/s/ Debra J. Ford
Village Clerk

Docusign Envelope ID: 73F002A8-3BF6-43A3-8EB8-CECE7883948A

2208934038

Doc# 2208934038 Fee $88.00

KAREN A. YARBROUGH
COOK COUNTY CLERK
DATE: 03/30/2022 12:53 PM PG: 1 OF 7

Ordinance 2021-35

An Ordinance Renewing a Special Permit for Personal Wireless Services Antenna Located on a Tower-Style Structure in Excess of District Height Limitations (Crown Castle GT Company, LLC – 180 Anets Drive) (Docket No. BOT-21-10)

Passed by the Board of Trustees, 9/28/2021
Printed and Published, 9/29/2021

Printed and Published in Pamphlet Form
by Authority of the
President and Board of Trustees
VILLAGE OF NORTHBROOK
COOK COUNTY, ILLINOIS

I hereby certify that this document
was properly published on the date
stated above.

/s/ Debra J. Ford
Village Clerk

I hereby certify this to be a true and exact copy of the original.
3/10/22
Date
Village Clerk

VILLAGE OF NORTHBROOK CORPORATE SEAL COOK COUNTY, ILL.

Docusign Envelope ID: 73F002A8-3BF6-43A3-8EB8-CECE7883948A

Ordinance 2021-35

BE IT ORDAINED by the President and Board of Trustees of the Village of Northbrook, County of Cook and State of Illinois THAT:

An Ordinance Renewing a Special Permit for Personal Wireless Services Antenna Located on a Tower-Style Structure in Excess of District Height Limitations (Crown Castle GT Company, LLC – 180 Anets Drive) (Docket No. BOT-21-10)

shall be, and is hereby, adopted as follows:

Section 1. BACKGROUND.

On August 13, 2019, the Corporate Authorities adopted Ordinance No. 2019-51 granting Crown Castle GT Company, LLC ("***Applicant***") a special permit to allow the maintenance, continued operation, and expansion of personal wireless services facility on an antenna support structure in excess of district height limitations at 180 Anets Drive ("***Property***") which is owned by Northbrook Park District ("***Owner***") and is located in the I-B Institutional Building District.

The special permit granted by Ordinance No. 2019-51 includes a term expiring on October 9, 2021. The Applicant submitted an application requesting a renewal of the special permit granted in Ordinance No. 2019-51 pursuant to Subsection 11-602 K of the Northbrook Zoning Code (1988), as amended ("***Zoning Code***").

The Facility has operated since 2019 without incident and the President and the Board of Trustees have determined that the circumstances under which the original special permit was granted have not substantially changed. Therefore, the Corporate Authorities have determined that it is in the best interests of the Village and the public to renew the special permit originally granted by Ordinance No. 2019-51.

Section 2. DESCRIPTION OF PROPERTY

The Property is commonly known as 180 Anets Drive, and is legally described in Exhibit A attached to and, by this reference, made a part of this Ordinance. The Property is located in the IB Institutional Building District.

Docusign Envelope ID: 73F002A8-3BF6-43A3-8EB8-CECE7883948A

Section 3. PUBLIC HEARING AND PUBLIC MEETING.

A public hearing to consider the renewal of the special permit was duly advertised and was held at the Board of Trustees regular meeting on September 28, 2021.

Section 4. RENEWAL OF SPECIAL PERMIT.

Subject to and contingent upon the conditions, restrictions, and provisions set forth in Ordinance No. 2019-51, and pursuant to Subsection 11-602 K of the Zoning Code, special permit to allow Personal Wireless Services Antenna Located on a Tower-Style Structure in Excess of District Height Limitations (SIC Number 4810.02) on the Property ("***Special Permit***"), is hereby, renewed and granted to the Applicant.

Section 5. RESTATEMENT OF ORDINANCE NO. 2019-51 WITH MINOR AMENDMENTS.

All terms, provisions, conditions, and restrictions of Ordinance No. 2019-51 shall remain in full force and effect with the exception of:

A. Number of Antennas. The Antenna Facilities shall be allowed to add one additional platform on the existing tower structure consisting of no more than nine additional panel antennas.

B. Location of Antenna Facilities. The Antenna Facilities shall be mounted no more than 88 from grade on the existing tower structure.

Section 6. BINDING EFFECT; TRANSFERABILITY.

The privileges, obligations, and provisions of each and every Section of this Ordinance, are for the sole benefit of, and shall be binding on, the Applicant, except as otherwise expressly provided in this Ordinance. Nothing in this Ordinance shall be deemed to allow this Ordinance to be transferred to any person or entity unless and until (a) such person or entity ("***Transferee***") executes and files with the Village Clerk an unconditional agreement and consent to accept and abide by each and all of the terms, conditions, and limitations set forth in this Ordinance in a form acceptable to the Village Manager and (b) the Board of Trustees has approved such transfer by resolution duly adopted.

Section 7. TERM.

The special permit renewed and restated in Section 5 above shall automatically expire, and the designated use shall terminate, on January 31, 2023, unless prior to such date, the Applicant shall have requested, and the Village's corporate authorities, in their sole and absolute discretion, shall have granted a renewal in accordance with Subsection 11-602 K of the Code.

Docusign Envelope ID: 73F002A8-3BF6-43A3-8EB8-CECE7883948A

Section 8. EFFECTIVE DATE.

A. This Ordinance shall be effective only upon the occurrence of all of the following events:

i. Passage by the Board of Trustees of the Village of Northbrook by a majority vote in the manner required by law;

ii. Publication in pamphlet form in the manner required by law;

iii. The filing by Applicant and Owner with the Village Clerk, for recording in the Office of the Cook County Recorder of Deeds, of an unconditional agreement and consent to accept and abide by each and all of the terms, conditions, and limitations set forth in this Ordinance. Such unconditional agreement and consent shall be in the form attached to and, by this reference, made part of this Ordinance as ***Exhibit B***, and shall be executed by the Applicant.

B. In the event that the Applicant does not file with the Village Clerk a fully executed copy of the unconditional agreement and consent referenced in Paragraph 8.A.iii above within 60 days after the date of passage of this Ordinance by the Corporate Authorities, the Corporate Authorities shall have the right, in their sole discretion, to declare this Ordinance null and void and of no force or effect.

Adopted: 9/28/2021

RESULT:	**ADOPTED [6 TO 0]**
MOVER:	Bob Israel, Trustee
SECONDER:	Dan Pepoon, Trustee
AYES:	Israel, Collison, Ross, Hebl, Pepoon, Ebhomielen
ABSTAIN:	Kathryn Ciesla

ATTEST:

/s/ Debra J. Ford
Village Clerk

VILLAGE OF NORTHBROOK CORPORATE SEAL COOK COUNTY, ILL.

I hereby certify this to be a true and exact copy of the original.
2-21-22
Date
Village Clerk

/s/ Kathryn L Ciesla
Village President

Docusign Envelope ID: 73F002A8-3BF6-43A3-8EB8-CECE7883948A

EXHIBIT A

Legal Description

EXISTING LEASE AREA DESCRIPTION PER SURVEY PREPARED BY STONELAKE SURVEY COMPANY, LTD DATED 9/10/97
THAT PART OF THE NORTHWEST QUARTER OF SECTION 15, TOWNSHIP 42 NORTH, RANGE 12 EAST OF THE THIRD PRINCIPAL MERIDIAN, DESCRIBED AS FOLLOWS: COMMENCING AT A POINT ON THE NORTH LINE OF THE SOUTH 525.40 FEET OF LOT 19 IN ASSESSOR'S DIVISION OF SAID SECTION 15, AT THE EASTERLY RIGHT OF WAY LINE OF THE CHICAGO, MILWAUKEE, ST. PAUL AND PACIFIC RAILROAD; THENCE NORTH 90 DEGREES EAST ALONG SAID NORTH LINE, 25.54 FEET; THENCE NORTH 00 DEGREES 00 MINUTES EAST, 47.96 FEET TO THE POINT OF BEGINNING; THENCE NORTH 01 DEGREES 25 MINUTES 05 SECONDS WEST, 20.00 FEET; THENCE SOUTH 88 DEGREES 34 MINUTES 55 SECONDS WEST, 30.00 FEET; THENCE SOUTH 01 DEGREES 25 MINUTES 05 SECONDS EAST, 20.00 FEET; THENCE NORTH 88 DEGREES 34 MINUTES 55 SECONDS EAST, 30.00 FEET TO THE POINT OF BEGINNING , ALL IN COOK COUNTY, ILLINOIS AND CONTAINING 600 SQUARE FEET.

EXISTING 12' ACCESS EASEMENT DESCRIPTION PER SURVEY PREPARED BY STONELAKE SURVEY COMPANY, LTD DATED 9/10/97
THAT PART OF THE NORTHWEST QUARTER OF SECTION 15, TOWNSHIP 42 NORTH, RANGE 12 EAST OF THE THIRD PRINCIPAL MERIDIAN, DESCRIBED AS FOLLOWS: COMMENCING AT A POINT ON THE NORTH LINE OF THE SOUTH 525.40 FEET OF LOT 19 IN ASSESSOR'S DIVISION OF SAID SECTION 15, AT THE EASTERLY RIGHT OF WAY LINE OF THE CHICAGO, MILWAUKEE, ST. PAUL AND PACIFIC RAILROAD; THENCE NORTH 90 DEGREES EAST ALONG SAID NORTH LINE, 372.00 FEET TO THE POINT OF BEGINNING; THENCE NORTH 00 DEGREES 00 MINUTES WEST, 470.00 FEET TO A POINT OF CURVE; THENCE NORTHWESTERLY ALONG A CURVE CONVEX NORTHEASTERLY AND HAVING A RADIUS OF 114.00 FEET, A DISTANCE OF 179.07 FEET; THENCE NORTH 90 DEGREES WEST, 350.0 FEET TO A POINT OF CURVE; THENCE SOUTHWESTERLY ALONG A CURVE CONVEX NORTHWESTERLY AND HAVING A RADIUS OF 52.00 FEET, A DISTANCE OF 97.52 FEET; THENCE SOUTH 17 DEGREES 27 MINUTES EAST, 322.53 FEET; THENCE SOUTH 15 DEGREES 45 MINUTES 40 SECONDS EAST, 147.04 FEET; THENCE SOUTH 01 DEGREES 25 MINUTES 05 SECONDS EAST, 20.00 FEET; THENCE NORTH 90 DEGREES WEST, 7.32 FEET; THENCE NORTH 15 DEGREES 45 MINUTES 40 SECONDS WEST, 164.25 FEET; THENCE NORTH 17 DEGREES 27 MINUTES WEST, 322.37 FEET TO A POINT OF CURVE; THENCE NORTHEASTERLY ALONG A CURVE CONVEX NORTHWESTERLY AND HAVING A RADIUS OF 64.00 FEET, A DISTANCE OF 120.02 FEET; THENCE SOUTH 90 DEGREES EAST, 350.00 FEET TO A POINT OF CURVE; THENCE SOUTHEASTERLY ALONG A CURVE CONVEX NORTHEASTERLY AND HAVING A RADIUS OF 126.00 FEET, A DISTANCE OF 197.92 FEET; THENCE SOUTH 00 DEGREES 00 MINUTES EAST, 470.00 FEET; THENCE SOUTH 90 DEGREES WEST, 12.00 FEET TO THE POINT OF BEGINNING, ALL IN COOK COUNTY, ILLINOIS AND CONTAINING 19,140 SQUARE FEET.

EXISTING 8' UTILITY EASEMENT DESCRIPTION PER SURVEY PREPARED BY STONELAKE SURVEY COMPANY, LTD DATED 9/10/97
THAT PART OF THE NORTHWEST QUARTER OF SECTION 15, TOWNSHIP 42 NORTH, RANGE 12 EAST OF THE THIRD PRINCIPAL MERIDIAN, DESCRIBED AS FOLLOWS: COMMENCING AT A POINT ON THE NORTH LINE OF THE SOUTH 525.40 FEET OF LOT 19 IN ASSESSOR'S DIVISION OF SAID SECTION 15, AT THE EASTERLY RIGHT OF WAY LINE OF THE CHICAGO, MILWAUKEE, ST. PAUL AND PACIFIC RAILROAD; THENCE NORTH 90 DEGREES EAST ALONG SAID NORTH LINE, 51.00 FEET; THENCE NORTH 00 DEGREES 00 MINUTES EAST, 4.00 FEET TO THE POINT OF BEGINNING, BEING THE CENTERLINE OF A 8.00 FOOT EASEMENT, 4.00 FEET EITHER SIDE OF THE FOLLOWING DESCRIBED LINE; THENCE SOUTH 90 DEGREES WEST, 22.00 FEET; THENCE NORTH 00 DEGREES 00 MINUTES EAST, 54.00 FEET; THENCE SOUTH 90 DEGREES WEST, 13.71 FEET TO THE END OF EASEMENT, ALL IN COOK COUNTY, ILLINOIS AND CONTAINING 716 SQUARE FEET.

PIN: 04-15-101-029

Docusign Envelope ID: 73F002A8-3BF6-43A3-8EB8-CECE7883948A

EXHIBIT B

Applicant's Unconditional Agreement and Consent

TO: The Village of Northbrook, Illinois ("Village"):

WHEREAS, The Northbrook Park District ("Owner") is owner of a property commonly known as 180 Anets Drive in the Village of Northbrook ("Property"); and

WHEREAS, the Crown Castle GT Company, LLC ("Applicant") has applied for a special permit renewal for personal wireless telecommunications antennas on the Property; and

WHEREAS, Ordinance No. 21 -035, adopted by the President and Board of Trustees of the Village of Northbrook on September 28, 2021 ("Ordinance"), grants approval of such special permit renewal, subject to certain conditions, for the benefit of Applicant; and

WHEREAS, Applicant desires to evidence to the Village its unconditional agreement and consent to accept and abide by each of the terms, conditions, and limitations set forth in said Ordinance and the Owner desires to evidence its consent to recording the Ordinance against the Property;

NOW, THEREFORE, Applicant and Owner do hereby agree and covenant as follows:

1. Applicant shall, and does hereby, unconditionally agree to, accept, consent to and abide by all of the terms, conditions, restrictions, and provisions of that certain Ordinance No. 21-035, adopted by the Village Board of Trustees on September 28, 2021.

2. Applicant acknowledges and agrees that the Village is not and shall not be, in any way, liable for any damages or injuries that may be sustained as a result of the Village's review and approval of any plans for the Property, or the issuance of any permits for the use and development of the Property, and that the Village's review and approval of any such plans and issuance of any such permits does not, and shall not, in any way, be deemed to insure Applicant against damage or injury of any kind and at any time.

3. Applicant acknowledges that the public notices and hearings have been properly given and held with respect to the adoption of the Ordinance, has considered the possibility of the revocation provided for in the Ordinance, and agrees not to challenge any such revocation on the grounds of any procedural infirmity or any denial of any procedural right.

4. Applicant agrees to and does hereby hold harmless and indemnify the Village, the Village's corporate authorities, and all Village elected and appointed officials, officers, employees, agents, representatives, and attorneys, from any and all claims that may, at any time, be asserted against any of such parties in connection with (a) the Village's review and approval of any plans and issuance of any permits, (b) the procedures followed in connection with the adoption of the Ordinance, (c) the development, construction, maintenance, and use of the Property, and (d) the performance by Applicant of its obligations under this Unconditional Consent and Agreement.

Docusign Envelope ID: 73F002A8-3BF6-43A3-8EB8-CECE7883948A

5. Applicant shall, and does hereby agree to, pay all expenses incurred by the Village in defending itself with regard to any and all of the claims mentioned in this Unconditional Consent and Agreement. These expenses shall include all out-of-pocket expenses, such as attorneys' and experts' fees, and shall also include the reasonable value of any services rendered by any employees of the Village.

6. Owner warrants and represents to the Village that he owns fee simple title to the Property and consents to the recording of the Ordinance against the Property.

WITNESS:

By: _____
Signature

By: Scott Zivick
Print Name

Its: _____

CROWN CASTLE GT COMPANY, LLC, an Illinois limited liability company

By: Tyler Richards
Signature

By: Tyler Richards
Print Name

Its: Site Acquisition Specialist

SUBSCRIBED and SWORN to before me this 10th day of Feb., 2021.

_____
Notary Public

VERONICA N LAWRENCE
Notary ID #131103553
My Commission Expires
April 26, 2025

Docusign Envelope ID: 73F002A8-3BF6-43A3-8EB8-CECE7883948A

Ordinance 2021-35

An Ordinance Renewing a Special Permit for Personal Wireless Services Antenna Located on a Tower-Style Structure in Excess of District Height Limitations (Crown Castle GT Company, LLC – 180 Anets Drive) (Docket No. BOT-21-10)

Passed by the Board of Trustees, 9/28/2021
Printed and Published, 9/29/2021

Printed and Published in Pamphlet Form
by Authority of the
President and Board of Trustees
VILLAGE OF NORTHBROOK
COOK COUNTY, ILLINOIS

I hereby certify that this document
was properly published on the date
stated above.

/s/ Debra J. Ford
Village Clerk

I hereby certify this to be a true and exact copy of the original.
3/10/22
Date
Village Clerk

VILLAGE OF NORTHBROOK CORPORATE SEAL COOK COUNTY, ILL.

August 12, 2025

180 Anets Drive: Special Permit Wireless Cell Tower Preliminary Review

Northbrook Board of Trustees Meeting

Zoning Relief Process

1

- **Preliminary Review of Sketch Plan by Board of Trustees**
- The Board reviews schematic plans of the proposal.
- The Board of Trustees provides initial comments on a proposal, indicating whether or not they see major issues that need to be addressed by the Applicant before they submit detailed plans.
- The Board of Trustees provides direction for a designated body to conduct the Public Hearing on the application if a formal application is filed.

2

- **Technical Review of Formal Application**
- Applicant files Formal Application
- Review of detailed plans, traffic study, financial impact analysis, etc. by Village Staff (Engineering, Police, Fire, Public Works, Zoning, Sustainability) and Village consultants
- Once technical issues are addressed, a public hearing can be scheduled.

3

- **Public Hearing Held by Northbrook Plan Commission or Northbrook Board of Trustees**
- Notice goes to neighbors by certified mail; a sign is posted on the property; and notice is published in the local newspaper.
- The Applicant presents their proposal, the neighbors are able to speak and ask questions/voice concerns.
- The body conducting the public hearing makes a recommendation on the request to approve or deny

4

- **Board of Trustees Review of Recommendations & Makes Decision (approve or deny)**
- The Board of Trustees reviews the record of the public hearing, including all of the public testimony and makes a final decision – they may also ask for further changes before making a decision.
- Board of Trustees adopts documents formally approving or denying the application.

Existing Conditions

180 Anets Drive



180 Anets Drive



Comprehensive Plan Designation
Government Facility

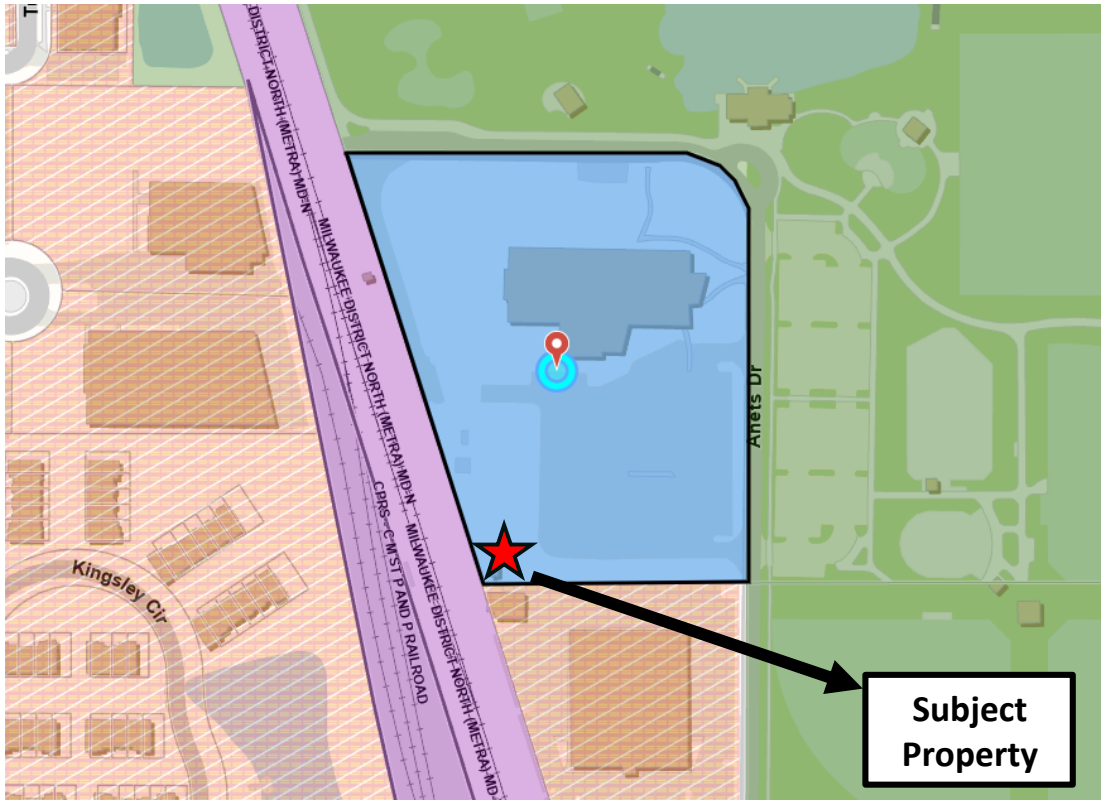

Zoning Map
IB Institutional Building District

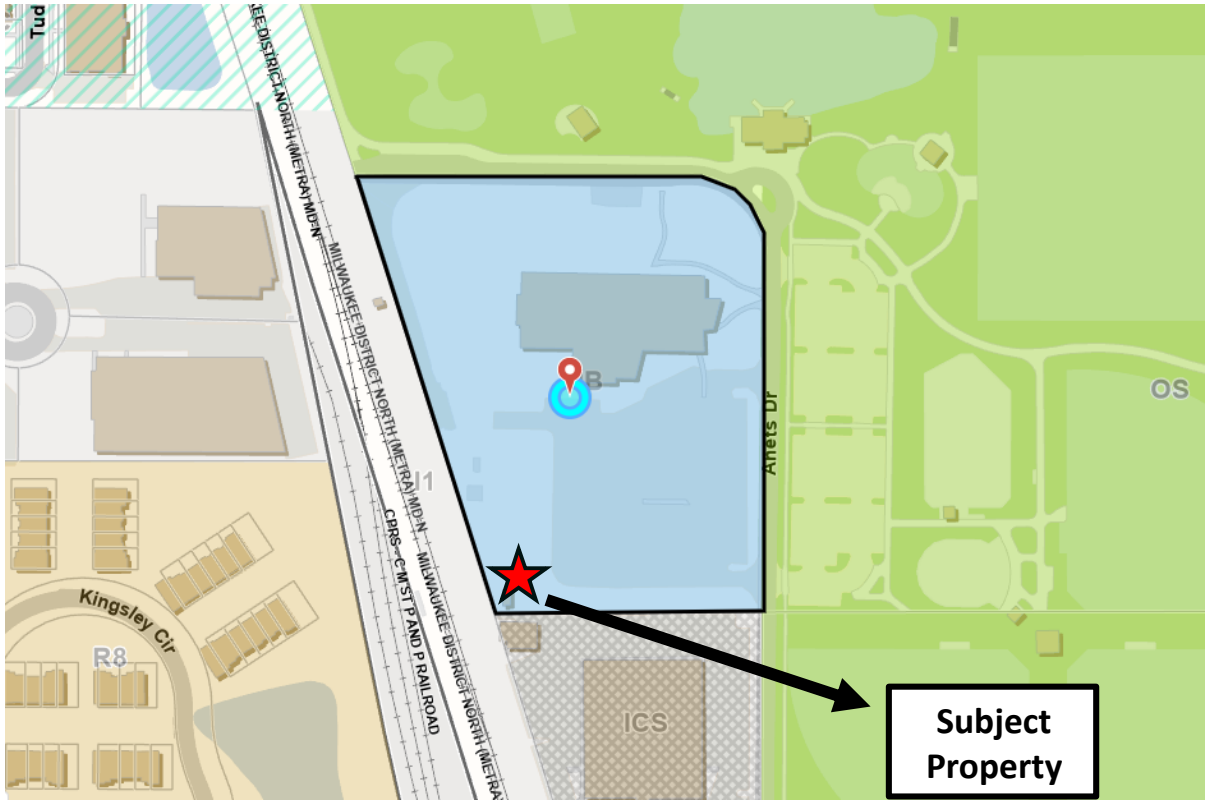

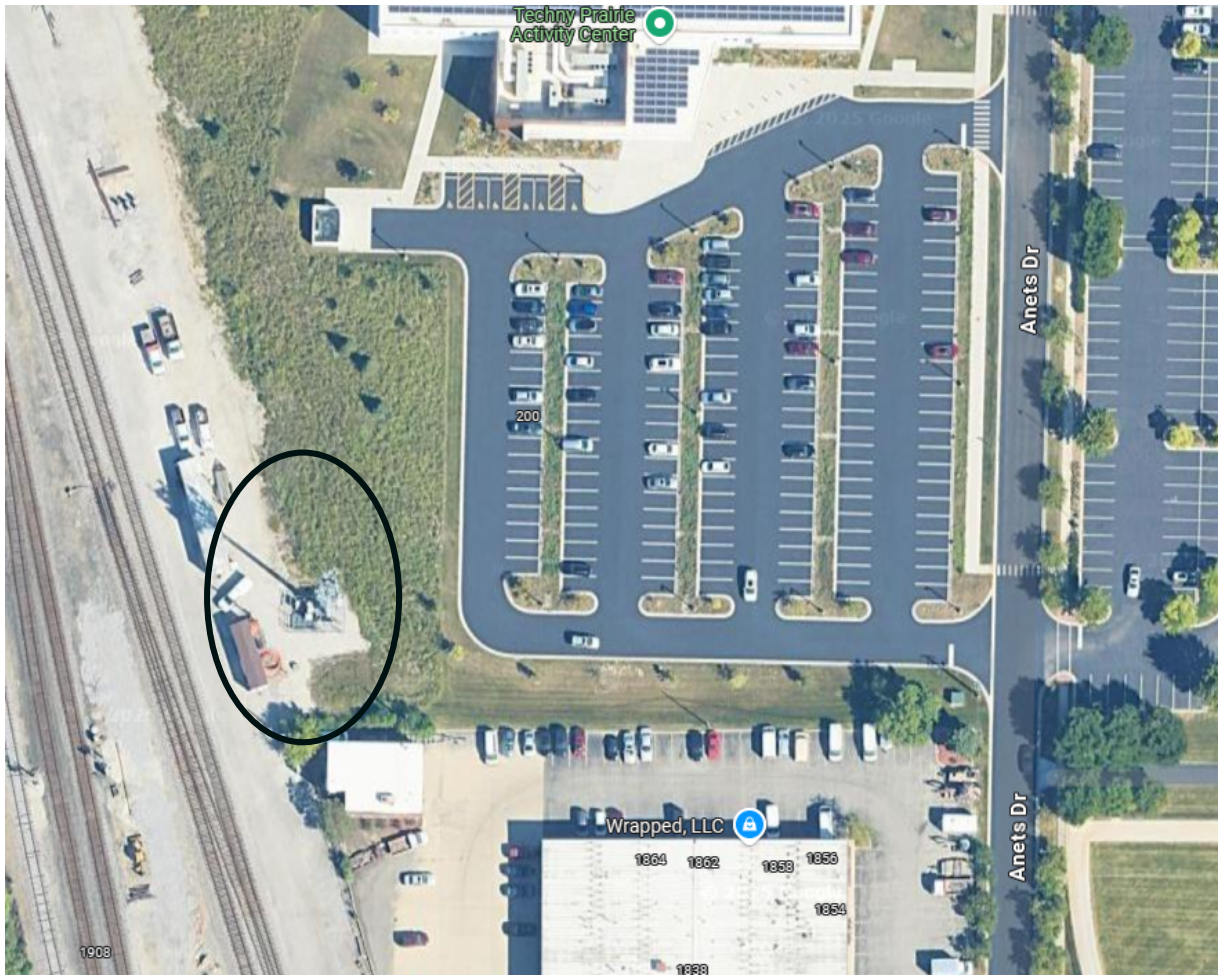
Techny Prairie
Activity Center
Anets Dr
200
Wrapped, LLC
1864
1862
1858
1856
1854
1908
Anets Dr



Proposed Use

Proposed Use

180 Anets Drive:

Crown Castle GT Company LC– Applicant Northbrook Park District– Owner

- Special permit to a Personal Wireless Services Antenna located on a Tower-Style Structure in Excess of District Height Limitations in the I-B Institutional Building District
- Variation to reduce the required distancing between the existing personal wireless service antenna tower and nearby structures from 110' to 69'
- Lot size – 6.23 acres
- No exterior building or site change proposed

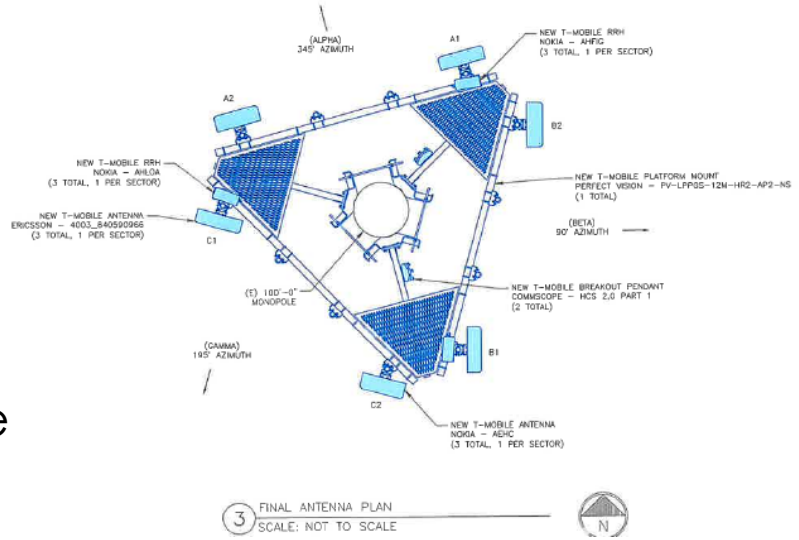

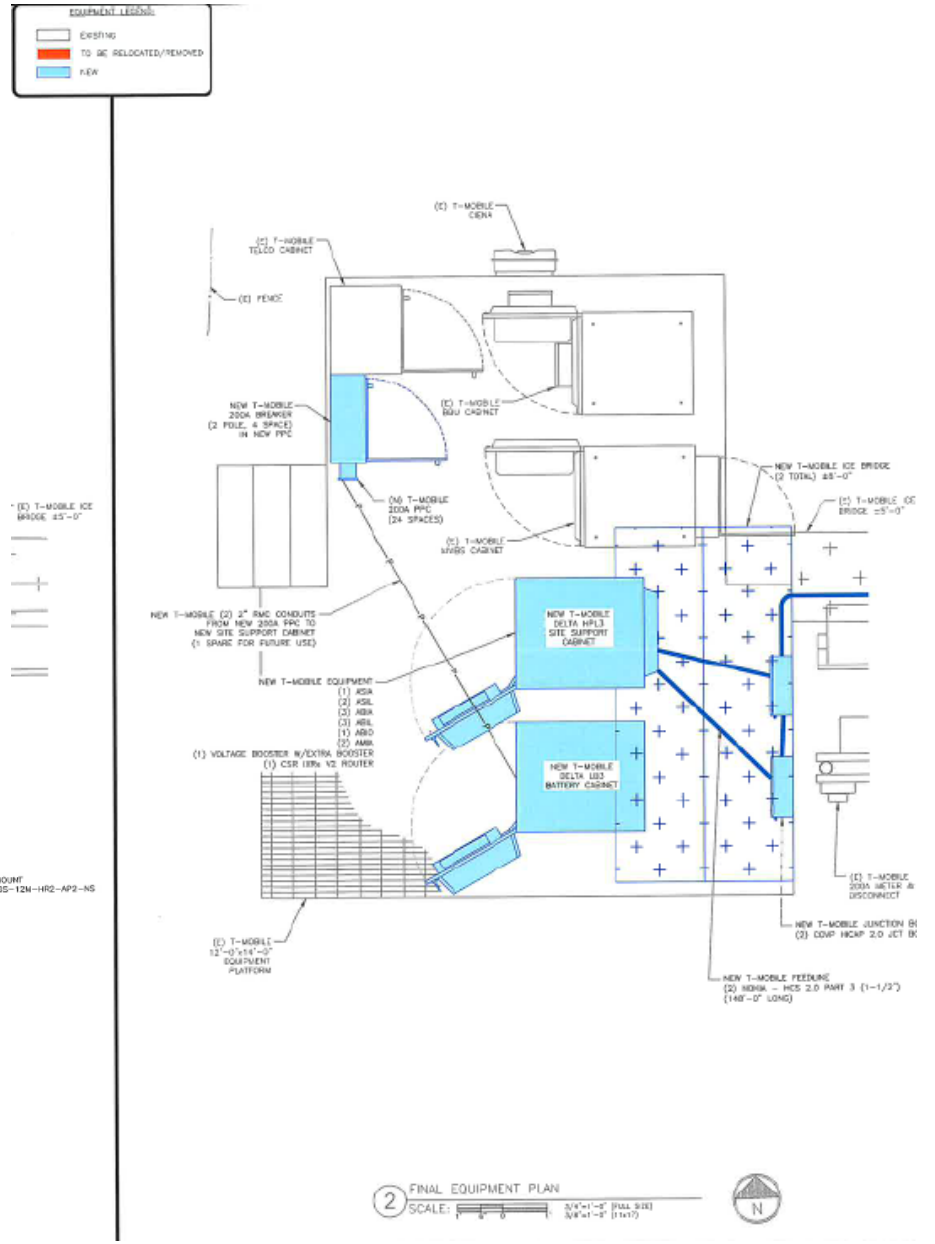

Zoning Relief Items to Consider

Zoning Relief

A. Special permit to allow the operation of wireless antenna equipment on a tower style structure in the I-B Institutional Building District.

B. Variation to reduce the required distancing between the existing personal wireless service antenna tower and nearby structures from 110’ to 69’

Items to Consider

1) Is it appropriate to allow the continued operation of a cell tower and equipment on the Subject Property?
2) If so, should there be any operational limitations placed on the use?

August 12, 2025

180 Anets Drive: Special Permit Wireless Cell Tower Preliminary Review

Northbrook Board of Trustees Meeting