Village Board of Trustees Agenda

Sandra "Sandy" Frum Board Room
1225 Cedar Lane Northbrook, IL 60062
Tuesday, July 14, 2026

7:30 PM

1. **ROLL CALL**
2. **PLEDGE OF ALLEGIANCE**
3. **MINUTES APPROVAL**
   A. June 23, 2026 Regular Board Meeting Minutes for Approval
4. **PUBLIC COMMENT TIME**

This agenda item is reserved for members of the public who desire to address the Village Board on a topic that is within purview and jurisdiction of the Village Board, but that is not listed in another location on the agenda. If you would like to speak about a matter that is listed on the agenda, we ask that you wait until that agenda item is called, and we will give you an opportunity to speak then. If your matter is on the "Consent Agenda", please let us know if you would like us to remove that matter so that you can speak about it.
Anyone desiring to speak should fill out a written speaker form (located in the back of the Board Room) and submit it to the Village Clerk. "Public Comment Time" is not a forum for open dialogue or engagement with members of the Village Board. Rather, it is intended as an opportunity for you to make comments to the Village Board. While the Village Board will not immediately respond to public comments at this meeting, or engage in a back and forth discussion during the meeting, please be assured that the Board is actively listening to all comments, thoughts, and suggestions.
All speakers will be limited to a total of three minutes. We request that everyone be respectful, civil, and non-repetitive; and we ask that members of the audience refrain from applauding or making any other comments during or after any speaker. Thank you for your understanding and taking the time to contribute to the success of our community.

5. **MANAGER'S REPORT**
   A. Weekly Village Manager Reports
      - Week Ending June 26
      - Week Ending July 3
      - Week Ending July 10
6. **WARRANT LIST**
   A. Review and Approval of Escrow Deposits/Performance Bond Refunds Processed Between June 16, 2026 - June 30, 2026
   B. Review and Approval of Payments Processed Between June 16, 2026 - June 30, 2026
7. **PRESIDENT'S REPORT**

Community Moment

A. A Resolution Approving A Voluntary Retirement Agreement
The Village desires to enter into a Voluntary Retirement Agreement with Village Manager Cara Pavlicek

8. CONSENT AGENDA

The matters listed for consideration on the Consent Agenda are matters that appear to have the unanimous support of the Board of Trustees. The Village President will review, designate the resolution or ordinance number for passage and then inquire if any member of the Board or member of the public objects to any item on the Consent Agenda. If any objections are raised, the matter will be removed from the Consent Agenda and relocated to a location on this agenda for consideration during the appropriate Board Committee report. If no objection is voiced, the Village President will request a motion and second for passage of all items listed. The resultant roll call vote on the Consent Agenda will be applicable to each individual agenda item.

A. A Resolution Authorizing the Purchase of LED Streetlight Fixtures from Graybar Electric Company, Inc. of St. Louis, Missouri

Consistent with the Village's Climate Action Plan, this Resolution authorizes the purchase of approximately 180 LED streetlighting fixtures which will be of the same style and type as those currently used throughout the Village.

B. A Resolution Authorizing the Second Renewal of an Agreement for Sewer Lining Services with Hoerr Construction, Inc. of Goodfield, Illinois

The Village lines segments of its sewers to improve the structural integrity of the main, seal mains from groundwater infiltration, and repair defects as necessary.

C. A Resolution Authorizing the Second Renewal of an Agreement for Manhole Rehabilitation Services with BLD Services, LLC of Winchester, Indiana f/k/a Culy Contracting, LLC of Winchester, Indiana

The Village uses contractual services to repair manholes when necessary in order to extend the structural integrity and useful life of the structures ensuring that sanitary sewers function as designed.

D. A Resolution Authorizing an Agreement for the Purchase and Installation of Snow Guards at the Public Works Center by Garland/DBS, Inc. of Cleveland, Ohio

To help prevent snow and ice from sliding off the roof at the Public Works Center, potentially causing damage to vehicles, equipment, or bodily injury to staff or visitors, the installation of snow guards has been identified as an appropriate building improvement.

E. A Resolution Approving the Purchase of a Snowplow and Salt Spreader for Unit #300 from Monroe Truck Equipment of Monroe, Wisconsin

This equipment will be installed on an existing new Public Works vehicle which is used to complete a variety of tasks including snow plowing, sanitary lift station maintenance, roadway patching and parkway restorations. The equipment includes an under-tailgate spreader and one 9' Boss snowplow.

F. A Resolution Approving an Agreement for Holiday Lighting and Winter Display Installation Services with B&B Holiday Decorating, LLC of Wheeling, Illinois

The Village of Northbrook installs holiday lighting throughout the Central Business District and at Village Hall with "holiday lighting" throughout the year. After three years of use, the holiday lighting installed in 2023 needs to be replaced. The Village also hosts a winter display at the Village Green fountain as part of the Illuminate Northbrook event, which includes a design element celebrating the Village's 125th anniversary.

G. A Resolution Authorizing the Grant Funded Purchase of Three Changeable Message Boards from Traffic and Parking Control Co., LLC (TAPCO) of Brown Deer, Wisconsin
The Villages of Northbrook and Wheeling were jointly awarded a State grant for the purchase of public safety equipment that will be shared pursuant to the Intergovernmental Agreement approved by Resolution 2025-160.

H. A Resolution Waiving Competitive Bidding and Authorizing a 48-Month Lease Agreement Renewal for Refuse and Recycling Stations in the Central Business District from Bigbelly Solar, LLC of Needham, Pennsylvania
The Village of Northbrook leases enclosed refuse and recycling stations to offer convenient refuse and recycling disposal options in the Central Business District for both residents and visitors.

I. A Resolution Waiving Competitive Bidding and Authorizing the Purchase of the E-Lock and MedVault System from Knox Company
Knox Company provides the E-Lock System and MedVault System use by the Village's Fire Department to work in unison to provide additional safeguards regarding access to buildings and controlled substances.

J. Resolution expressing official intent regarding certain expenditures, related to land acquisition costs, to be reimbursed from proceeds of an obligation to be issued by the Village of Northbrook, Cook County, Illinois
This is a procedural action in accordance with the adopted FY27 Budget to capture capital expenditures related to land acquisition for the construction of a future Police Station and Fire Headquarters, to be funded with a future tax exempt general obligation bond issuance.

K. An Ordinance Amending the Northbrook Zoning Code (Plan Commission Docket No. PCD-26-03)
As recommended by the Plan Commission, certain technical corrections and amendments are presented to clarify and correct the Northbrook Zoning Code adopted September 9, 2025 by Ordinance No. 2025-55.

L. An Ordinance Amending the Northbrook Comprehensive Plan (Plan Commission Docket No. PCD-26-03)
As recommended by the Plan Commission, documented metrics in the Plan have updated and the Village's Strategic Plan and branding identities have been added to the Northbrook Comprehensive Plan that was adopted December 14, 2010.

M. An Ordinance Amending the Board of Fire and Police Commission Rules
As recommended by the Board of Fire and Police Commissioners, this amendment will expand and improve procedures for the recruitment of entry level Police Officer and Firefighter candidates as well as update administrative language.

N. A Resolution Authorizing and Approving the Appointment of Certain Special Counsel
The Village desires to engage Clark Baird Smith LLP to serve as Special Counsel to the Village Board regarding an employment law matter.

O. Motion to Approve the May 26, 2026 Closed Session Minutes held during the

Committee of the Whole Meeting of the Village Board

9. **ADMINISTRATION AND FINANCE**
10. **PLANNING AND ECONOMIC DEVELOPMENT**
11. **COMMUNITY AND SUSTAINABILITY**
12. **HOUSING**
13. **LABOR RELATIONS**
14. **PUBLIC WORKS AND FACILITIES**
15. **PUBLIC SAFETY**
16. **COMMUNICATIONS AND OUTREACH**

    A. A Motion to Accept Receipt of the Village Communications Plan
    The Board will receive the Village Communications Plan which was developed the Village's consultant (a5 Branding and Digital).

17. **REMARKS FOR THE GOOD OF THE ORDER**
18. **CLOSED SESSION**
19. **ADJOURN**

The Village of Northbrook is subject to the requirements of the Americans with Disabilities Act of 1990. Individuals with disabilities who plan to attend this meeting and who require certain accommodations in order to allow them to observe or participate in this meeting, or who have questions regarding the accessibility of the meeting or facilities, are requested to promptly contact the Village of Northbrook at (847) 272-5050, or the Illinois Relay Center at (800) 526-0844, to allow the Village of Northbrook to make reasonable accommodations for those persons.

WEEKLY MANAGER'S REPORT

WEEK ENDING JUNE 26, 2026

Meetings of the Village Board

- No meetings of the Village Board next week.

Activity Reports

Police Bulletin: The weekly police bulletin has been updated for the week ending on June 26, 2026.

Save the Date

Chief Ustich Retirement Celebration – Tuesday, June 30 from 2-4 p.m.
After 30 years of service to the Village of Northbrook, Police Chief John Ustich will retire from the Northbrook Police Department. The Village will host a retirement celebration on Tuesday, June 30, from 2-4 p.m. at Village Hall (1225 Cedar Lane), with a program beginning at 2:30 p.m. Community members are invited to join in recognizing Chief Ustich's distinguished career and contributions to Northbrook.

Northbrook Fourth of July – Saturday, July 4, Parade at 4 p.m., Fireworks at Dusk
Northbrook's annual Fourth of July celebration returns on Saturday, July 4, 2026, with the parade kicking off at 4 p.m., and fireworks at dusk. The festivities bring the community together for a day of patriotic pride, family fun, and hometown tradition. A proud collaboration between the Northbrook Park District and the Village of Northbrook. This year's celebration is especially meaningful as Northbrook marks its 125th anniversary and America's 250th birthday. Learn more about this year's festivities at northbrook4thofjuly.com.

Volunteer for the Northbrook Grand Prix! – Race Day is on Thursday, July 23
Want to be part of one of Northbrook's premier summer events? Volunteers are needed for the 2026 Northbrook Grand Prix on Thursday, July 23! Help make this exciting day of downtown bike racing possible by assisting with registration, course marshaling, and other event activities. No experience is necessary, just bring your enthusiasm and community spirit. Sign up through the volunteer registration form here. For more information about the event click here.

Updates

2026 Asphalt Street Rehabilitation Program Update
Pavement milling operations are in process on Surrey Lane, Red Hawk Road, Pointe Drive, Woodhead Drive, Eva Drive, Dana Court, and Donovan Glen Court. Next week, the contractor will place the first layer of asphalt on Dana Court, Donovan Glen Court, Eva Drive, Woodhead

Drive, Marden Court, Grace Road, Pointe Drive, Red Hawk Road, and Surrey Lane. This initial layer, approximately ¾-inch thick, serves as a leveling course and provides added resistance to cracking. Once the first layer has cured, the contractor will place the second and final layer, approximately 1½ inches thick, to complete the roadway surface.

Residents may sign up to receive regular project updates via the Village's "NotifyMe" notification system by subscribing on the Village's NotifyMe webpage. Questions about the project can be directed to Engineering Technician Jim Huff at 847-272-4711 or via email at James.Huff@northbrook.il.us.

Preparations for 4th of July
Preparations for the Fourth of July festivities will continue and range from parade route inspections to street sweeping and installation of "No Parking" signs in various locations for both the parade and the fireworks as early as Thursday, July 2. On the morning of July 4, staff will stage barrier fencing and barricades as needed along the parade route. Full road closures will take effect at 2:30 p.m. sharp to help ensure a safe and well-coordinated event for participants and attendees. Consistent with last year, residents along the parage route have received a direct mail communication from the Village detailing the event.

Hydrant Flushing Program Update
The 2026 Hydrant Flushing Program is ongoing with Public Works reporting that crews have flushed 443 of the 1,083 scheduled Village-owned hydrants, which is approximately 41% of the Program to date. Residents, businesses, and motorists may see Public Works crews conducting hydrant flushing operations in the eastern portion of the Village. This Program proactively identifies fire hydrants which may not be operating properly and schedule any necessary repairs. Residents may notice temporary discoloration in their water during flushing operations. This is a normal occurrence and if discoloration is experienced, residents are encouraged to run cold water from a faucet in their home until the water runs clear. Residents and businesses with questions can contact the Public Works Department at 847-272-4711 and staff will be able to assist.

Fleet Maintenance Garage Construction Update
This week, crews completed installation of the StormTrap and underground plumbing of the lower level. Crews also began installing the concrete masonry unit (CMU) which will support the foundation and load-bearing for the south elevator location.

Upcoming work activities for the week of June 29 include:
- Excavation and pouring of the Fleet Maintenance Garage foundations; and
- Excavation for the foundations that will support the lifts and help withstand heavy concentrated loads of apparatus, vehicles, and equipment

Fire Station 11 Construction Update
This week, crews began foundation work by excavating and setting rebar in preparation for concrete placement. This work will be performed in sequences, beginning on the north side of the project area and progressing southward, with completion anticipated the week of July 20. In addition, crews anticipate completing backfilling operations around the StormTrap this week. Next week, they are expected to begin installing the stormwater piping that will connect to the StormTrap system.

Public Works Center Solar Panel Project Update



The Village's contractor, SunPeak, completed the installation of the solar panels. Before the system can be energized, ComEd must conduct a test of the system and give approval before the panels will be able to tie into ComEd's network. The panels also require approval from the Village's Electrical Inspector. The solar panel system is part of the Village's ongoing efforts to improve energy efficiency and reduce operating costs at municipal facilities.

Permits & Licenses Issued

- Hometown Coffee was issued a building permit for a building addition to accommodate the adaptive reuse of the existing building for a future restaurant. Click here for a list of Commercial Building Permits issued in 2026.
- Click here to see a list of all new Business Licenses issued in 2026.

Development Updates

- With the site work complete, individual residential permits for the 7-lot Northgate Estates Subdivision located at 2420-2450 Landwehr Road are being submitted. Click here for more information on the project as well as other noteworthy new developments and construction occurring in Northbrook.
- The Zoning Board of Appeals conducted two public hearings on June 22, 2026; the first application for consideration of a fence more than the permitted height for a front yard along Waukegan Road, and the second application for consideration of a setback variation to accommodate a new single-family home on an irregularly shaped lot. The Zoning Board of Appeals unanimously approved both applications. Click here for more information about this and other development applications under review.
- While the Downtown Plan has been available on the Village website, it has now been added to the Downtown Development webpage here as another location for the ease of sharing the information as development around the downtown is being discussed. As a reminder, Village Plans can also always be found on the Community Plans webpage here.

Northbrook Firefighters Visit Burn Camp



On June 16, two Northbrook Firefighters in a reserve engine visited the Illinois Fire Safety Alliance's "Camp I Am Me" in Ingleside, IL. Camp I am Me offers a free of charge summer camp for young burn survivors. Set in a safe, supportive, and completely non-judgmental environment, campers spend a week surrounded by peers who understand their journey. This shared connection helps break down emotional barriers, allowing children to feel accepted, understood, and free to simply be kids again without fear of stares or questions about their scars. In 2026, the burn camp marks its 35th year of operation. Annually, Northbrook

Firefighters are part of the firefighter visit day, along with other firefighters from all over the Chicago metropolitan area. This year, Engineer/Paramedic Paul Schwarz and Firefighter/Paramedic Robert Pentek visited the campers.

Public & Community Safety Education
The Police Department presented a community safety education through an “Identity Theft and Scam Prevention” program at North Shore Place and a “Stranger Danger” presentation for the children (in multiple age groups) at Bright Horizons Daycare.

WEEKLY MANAGER'S REPORT

WEEK ENDING JULY 3, 2026

Reminder Village Offices will be closed on Friday, July 3 in observance of the Fourth of July Holiday.

Meetings of the Village Board

- No meetings of the Village Board next week.

Activity Reports

Police Bulletin: The weekly police bulletin has been updated for the week ending on July 3, 2026.

Save the Date

Northbrook Fourth of July – Saturday, July 4, Parade at 4 p.m., Fireworks at Dusk
Northbrook's annual Fourth of July celebration returns on Saturday, July 4, 2026, at 7:30 a.m. with the Liberty Loop 5K Run/Walk followed by the Liberty Lap Fun Run at 8:30 a.m. for junior joggers. The parade starts on Cherry Lane, just west of Westmoor School, at 4 p.m., and at 7:00 p.m. be part of the DJ Entertainment at the Velodrome in advance of the dusk fireworks. These festivities bring the community together for a day of patriotic pride to celebrate and commemorate the 250th anniversary of the signing of the Declaration of Independence with family fun, and hometown tradition. This year's celebration is additionally an opportunity to mark Northbrook's 125th anniversary of the village's incorporation. For a full schedule of event details visit northbrook4thofjuly.com.

Volunteer for the Northbrook Grand Prix! – Race Day is on Thursday, July 23
Want to be part of one of Northbrook's premier summer events? Volunteers are needed for the 2026 Northbrook Grand Prix on Thursday, July 23! Sign up through the volunteer registration form here. For more information about the event click here.

Updates

Preparations for 4th of July
Parade and Fireworks preparations include "No Parking" restrictions on various locations starting Saturday, July 4 in designated areas for both the parade and fireworks. Please observe all posted signage. Full road closures will take effect promptly at 2 p.m. to help ensure a safe and well-coordinated event for participants and attendees.

Waukegan Road Work Rescheduled

Roadway patching on Waukegan Road has been rescheduled for Wednesday, July 8, and Thursday, July 9, beginning at 8 a.m. The right northbound lane near 1000 Waukegan Road (Crestwood Place) will be closed to permanently repair a temporary roadway patch from last winter's water main break. Traffic will be reduced to one northbound lane using barricades, cones, and arrow boards. The roadway is expected to fully reopen by approximately 3 p.m. on Thursday, July 9. Please see the map on the right for additional details.

Questions may be directed to Facilities Manager Daniel Juarez at 847-272-4711.



Development & Business License Updates

As a reminder, Development and Planning Services shares comprehensive year-to-date information on the Village Website at the following links:

- 2026 Commercial Building Permits
- New 2026 Business Licenses.
- Information about development applications under review.
- Projects and new developments and construction occurring in Northbrook.

It is also noted that LifeTime Fitness, located at 1300 Techny Rd., obtained their business license this week and Rescue Plumbing received a license for a new office location at 1935 Shermer Rd # 200 Unit 1. They perform residential and commercial plumbing and sewer work in Northbrook and the surrounding areas.

Intergovernmental Partners Hold Planning Discussion

Village and school district leaders recently came together to discuss Northbrook's future growth, potential development opportunities, and the importance of maintaining strong partnerships as the community plans for its future. The conversation focused on balancing economic development with the long-term needs of local schools through open communication, thoughtful planning, and continued collaboration. Click here to read more about the intergovernmental discussion.

WEEKLY MANAGER'S REPORT

WEEK ENDING JULY 10, 2026

Meetings of the Village Board

Tuesday, July 14, 2026

- Committee of the Whole Meeting – 6 p.m. in the Terrace Room
- Village Board Regular Meeting – 7:30 p.m. in the Board Room

Activity Reports

Police Bulletin: The weekly police bulletin has been updated for the week ending on July 10, 2026.

Save the Date

Northbrook Grand Prix! – Thursday, July 23 | Northbrook Downtown
The Northbrook Grand Prix returns to Northbrook Downtown on Thursday, July 23 for a full day of high-speed cycling and community fun. Watch as amateur and elite cyclists from around the world race through downtown's tight turns as part of the Chicago Grit series. Whether you're a cycling fan or just looking for an exciting summer event, there's something for everyone to enjoy! While you're here, grab a bite at one of our local restaurants, browse downtown shops, and support the businesses that make our community great! Click here for more race information.

Updates

Download Recycle Coach Today!
Northbrook residents can now download Recycle Coach, a free app that makes recycling and waste collection easier than ever. After creating a free account and entering your home address, you'll receive your personalized refuse and recycling collection schedule, pickup reminders, and disposal guidance for thousands of household items. Recycle Coach also provides updates on holiday collection changes and special recycling events. The app is available free in the App Store and Google Play and can also be accessed through the Village's Refuse & Recycling webpage.

EV Charging Stations Now Available at Village Hall
The Village's new Level 2 EV charging stations are officially open, providing a convenient charging option for residents and visitors. Click the link below to learn about hours of operation, how to access the stations, parking requirements, and other important guidelines before you plug in. Click here for more information about EV charging at Village Hall.

Public Safety Community Relations
The Northbrook Police Department hosted its second annual Northbrook Junior Police Academy this week, giving participants, ages 12 to 16, an engaging introduction to careers in law enforcement through interactive presentations and hands-on demonstrations. Throughout the program, participants explored topics including drone operations, the K-9 program, evidence collection and preservation, and impaired driving awareness through a DUI simulator. The academy concluded on Friday, July 10, with a graduation ceremony recognizing each participant's successful completion of the program.

Development & Business License Updates
As a reminder, Development and Planning Services shares comprehensive year-to-date information on the Village website at the following links:

- 2026 Commercial Building Permits
- New 2026 Business Licenses
- Information about development applications under review
- Projects and new developments and construction occurring in Northbrook

Meadow Plaza (1901 Cherry Ln) Development Information
The Village has received a Preliminary Review Application from Pulte Homes, the contract purchaser of the privately owned Meadow Plaza property at 1901 Cherry Lane, for redevelopment. A preliminary review is a proposal that is in the early stages of the Village's public review process, and in the case of Meadow Plaza, a formal application has not yet been submitted. When a formal application is received, the land use and zoning review process is typically a few months long and will start with the Village posting the formal application materials on the Village website followed by a Public Hearing. The public hearing is not scheduled until an internal staff review is completed to determine if the application meets the requirements in the various Village Codes and Ordinances.

At the May 26, 2026, Village Board of Trustees Regular Meeting, a Preliminary Review Discussion was held where the Board of Trustees provided non-binding feedback on the preliminary proposal. To learn more, visit the Village website at Meadow Plaza -1901 Cherry Ln Information.

On Monday, President Ciesla, Trustee Hebl, DPS Director McEwan, and Deputy Village Manager Jim Hawkins attended a meeting hosted by the Northbrook Chamber of Commerce and Industry for the tenants of Meadow Plaza to engage in a dialogue about the preliminary proposal.

Employee News
Deputy Police Chief Marc Fainman has been appointed Interim Police Chief by the Village Manager and will serve in the role as the selection process for its next Chief of Police is completed. Internal applications for the position of Chief were accepted from current employees at the Northbrook Police Department that currently hold the rank of Commander or Deputy Chief. Chief John Ustich retired July 1, 2026, after more than 30 years of service in the Northbrook Police Department.

VILLAGE OF NORTHBROOK

GENERAL LEDGER SYSTEM
WARRANT LIST

ESCROW DEPOSIT/PERFORMANCE BOND REFUNDS
INVOICES PROCESSED BETWEEN JUNE 16, 2026 - JUNE 30, 2026
FOR 7/14/26 MEETING

CHECK NUMBER	VENDOR NAME	PURPOSE	AMOUNT
8695(A)	SCHWARTZ FAMILY PARTNERSHIP	ESCROW DEPOSIT/PERFORMANCE BOND REFUND	188,911.00
313112	GAIL GUTEKANST	ESCROW DEPOSIT/PERFORMANCE BOND REFUND	300.00
313113	JOHN KONSOR	ESCROW DEPOSIT/PERFORMANCE BOND REFUND	600.00
313114	VIRGINIA HURST	ESCROW DEPOSIT/PERFORMANCE BOND REFUND	600.00
313115	YURI AND ALFRED TAM	ESCROW DEPOSIT/PERFORMANCE BOND REFUND	3,900.00
313116	JONATHAN & STEPHANIE ADAMS	ESCROW DEPOSIT/PERFORMANCE BOND REFUND	500.00
313117	CRESTWOOD HOMES INC	ESCROW DEPOSIT/PERFORMANCE BOND REFUND	5,000.00
313118	TRENCHLESS INNOVATIONS INC	ESCROW DEPOSIT/PERFORMANCE BOND REFUND	500.00
313119	RELIANCE PLUMBING	ESCROW DEPOSIT/PERFORMANCE BOND REFUND	500.00
313120	ELIZABETH RZEPIELA	ESCROW DEPOSIT/PERFORMANCE BOND REFUND	500.00
313121	LUCJAN BARTUSIAK	ESCROW DEPOSIT/PERFORMANCE BOND REFUND	2,000.00
313122	JOSEPH ALLEN	ESCROW DEPOSIT/PERFORMANCE BOND REFUND	5,000.00
313123	ROTO-ROOTER	ESCROW DEPOSIT/PERFORMANCE BOND REFUND	500.00
313124	IRRIGATION GUYS	ESCROW DEPOSIT/PERFORMANCE BOND REFUND	500.00
313125	ALFRED & YURI TAM	ESCROW DEPOSIT/PERFORMANCE BOND REFUND	2,500.00
313126	COMMAND PLUMBING	ESCROW DEPOSIT/PERFORMANCE BOND REFUND	1,000.00
313127	RAVINIA PLUMBING & HEATING	ESCROW DEPOSIT/PERFORMANCE BOND REFUND	1,000.00
313128	ONE TIME IRRIGATION INC	ESCROW DEPOSIT/PERFORMANCE BOND REFUND	500.00
313129	S&J PLUMBING LLC	ESCROW DEPOSIT/PERFORMANCE BOND REFUND	500.00
313130	THE SCOTTISH PLUMBER	ESCROW DEPOSIT/PERFORMANCE BOND REFUND	500.00
313131	BLACK DIAMOND PLUMBING MECH	ESCROW DEPOSIT/PERFORMANCE BOND REFUND	500.00
313132	AMERICAN LLC	ESCROW DEPOSIT/PERFORMANCE BOND REFUND	1,000.00
313133	KLOEPFER CONSTRUCTION	ESCROW DEPOSIT/PERFORMANCE BOND REFUND	500.00
313134	M&C SERVICES INC	ESCROW DEPOSIT/PERFORMANCE BOND REFUND	500.00
313135	J BLANTON PLUMBING	ESCROW DEPOSIT/PERFORMANCE BOND REFUND	500.00
313136	JOANNA WALSH	ESCROW DEPOSIT/PERFORMANCE BOND REFUND	1,000.00
313137	AQUA DOCTOR	ESCROW DEPOSIT/PERFORMANCE BOND REFUND	500.00
313138	ALFRED & YURI TAM	ESCROW DEPOSIT/PERFORMANCE BOND REFUND	1,000.00
313139	COMMAND PLUMBING	ESCROW DEPOSIT/PERFORMANCE BOND REFUND	500.00
313140	DRAINS INC	ESCROW DEPOSIT/PERFORMANCE BOND REFUND	500.00
313141	AMERICAN NATIONAL SPRINKLER	ESCROW DEPOSIT/PERFORMANCE BOND REFUND	1,000.00
313142	DANIEL MACKIN	ESCROW DEPOSIT/PERFORMANCE BOND REFUND	2,450.00
		CLASS 'A' TOTAL	**225,261.00**

VILLAGE OF NORTHBROOK

GENERAL LEDGER SYSTEM
WARRANT LIST

INVOICES PROCESSED BETWEEN JUNE 16, 2026 - JUNE 30, 2026
FOR 7/14/26 MEETING

Sorted Alphabetically

CHECK NUMBER	VENDOR NAME	PURPOSE	AMOUNT
313163	3M COMPANY	SUPPLIES - PW	742.22
313202	911 TECH INC	SUBSCRIPTION - PD	3,056.13
313169	ACE HARDWARE & RENTAL	EQUIPMENT/SUPPLIES - PW/FD/PD	4,199.57
8673(A)	ADDIS LAW GROUP	LEGAL SERVICES - GG	17,000.00
313198	ADS ENVIRONMENTAL SERVICES	SERVICES - PW	1,500.00
313221	ADVANCED AUTO PARTS AND CARQUEST	PARTS - PD	174.99
8630(A)	ADVANCED TREE CARE	SERVICES - PW (*)	10,114.02
8631(A)	AIR ONE EQUIPMENT INC	SUPPLIES/EQUIPMENT - FD	8,515.00
8632(A)	ALEXANDER CHEMICAL CORPORATION	CHEMICALS - PW (*)	6,648.16
313237	ALEXANDER GIARMIDIS	REIMBURSEMENT - PD	103.56
313220	ALLIED GARAGE DOOR INC	SERVICES - PW	295.00
8633(A)	ALPHA PRIME COMMUNICATIONS	RADIO LICENSE - PW	1,200.00
8659(A)	ALPHAGRAPHICS US333	125 ANNIVERSARY BANNER - GG	167.74
8666(A)	AMAZON.COM SERVICES	EQUIPMENT/SUPPLIES - PW/PD/IT/FIN/FD/DPS	7,673.48
313217	AMERICAN TAXI DISPATCH INC	SENIOR TRANSPORTATION - FIN	295.00
313238	ANGELIKA MCGEE	REIMBURSEMENT - PD	30.45
313144	ARTHUR CLESEN INC	SUPPLIES - PW	659.05
313194	ATLAS BOBCAT LLC	PARTS - PW	501.74
8662(A)	ATLAS ENGINEERING GROUP LTD	BRIDGE INSPECTION - PW (*)	18,649.25
313224	ATLASTICITY LLC	SUBSCRIPTION - IT	254.95
8658(A)	AW ZENGELER CLEANERS INC	UNIFORMS - PD	137.52
313193	AXON ENTERPRISE INC	EQUIPMENT/SUBSCRIPTION - PD (*)	91,791.78
8669(A)	B&B HOLIDAY DECORATING LLC	SERVICES - PW (*)	23,147.50
8674(A)	BIG BELLY SOLAR LLC	TRASH/RECYCLING RECEPTACLES - PW (*)	2,171.98
8686(A)	BILLS PLUMBING & SEWER INC	SERVICES - PW	3,565.00
8663(A)	BIO TRON INC	SERVICES - FD	150.00
313239	BRADON PRATE	REIMBURSEMENT - PD	214.50
313254	BRENDON BINKLEY	REIMBURSEMENT - FD	429.98
313255	BRYAN HENNESSY	REIMBURSEMENT - FD	60.40
8636(A)	BS&A SOFTWARE	PAYMENT PROCESSING SERVICES - FIN (*)	18,957.30
313196	BUILDERS ASPHALT LLC	MATERIALS - PW (*)	1,629.28
8661(A)	CABCONNECT	SENIOR TRANSPORTATION - FIN	75.90
8692(A)	CAPTRUST FINANCIAL ADVISORS	PROFESSIONAL SERVICES - GG	3,750.00
313143	CASE LOTS INC	SUPPLIES - PW	2,361.80
8638(A)	CDW GOVERNMENT INC	EQUIPMENT - IT	1,116.46
8680(A)	CHICAGO PARTS & SOUND ENTERP LLC	PARTS - FD/PD	509.58
313266	CHRIS GLASER	WATER/SEWER REFUND - FIN	4.30
313188	CINTAS CORPORATION #2	SUPPLIES - PD	475.01
313187	CINTAS CORPORATION #2	UNIFORMS - PW	155.12
8670(A)	CLARK HILL PLC	LEGAL SERVICES - GG	5,563.50
8637(A)	COMCAST	TELECOMMUNICATIONS - IT	3,104.57
313145	COMCAST CABLE	TELECOMMUNICATIONS - IT	465.35
313146	COMMONWEALTH EDISON COMPANY	UTILITIES - PW	6,191.19
8675(A)	CONSTELLIX	SUBSCRIPTION - IT	12.53
313229	CONTINENTAL RESOURCES INC	EQUIPMENT - IT	14,117.96
313230	CONTINENTAL RESOURCES INC	EQUIPMENT - IT	396.87
313147	COOK COUNTY RECORDER OF DEEDS	RECORDING FEES - DPS	93.00
313192	CUMMINS SALES & SERVICE	PARTS - PW	1,987.29
313148	CUTLER WORKWEAR	UNIFORMS - PW (*)	4,633.99
8676(A)	DACRA TECH LLC	SUBSCRIPTION - IT	2,750.00
313262	DANIEL & LAUREN FINKEL	WATER/SEWER REFUND - FIN	4.30
313233	DATAVANT LLC	SERVICES - PD	68.10
313149	DELUXE	SUPPLIES - FIN	162.82
8694(A)	DIAZ GROUP LLC	SERVICES - PW (*)	1,942.00
313222	DRAIN & PLUMBING SERVICES	SERVICES - PW (*)	9,758.59
313150	EL-COR INDUSTRIES INC	PARTS - PW	1,672.47
313228	ELEGANT MOBILE DETAIL LLC	SERVICES - PD	700.00
8668(A)	ELROD FRIEDMAN LLP	LEGAL SERVICES - GG/DPS	50,749.50
313264	EMILY & JASON HEMING	WATER/SEWER REFUND - FIN	571.88

VILLAGE OF NORTHBROOK

GENERAL LEDGER SYSTEM
WARRANT LIST

INVOICES PROCESSED BETWEEN JUNE 16, 2026 - JUNE 30, 2026
FOR 7/14/26 MEETING

Sorted Alphabetically

CHECK NUMBER	VENDOR NAME	PURPOSE	AMOUNT
313173	ENDEAVOR HEALTH MEDICAL GROUP	PROFESSIONAL SERVICES - FD/PD	748.00
313240	ERIC GUSTASON	REIMBURSEMENT - PD	150.42
313263	ERIN COOPER	WATER/SEWER REFUND - FIN	9.60
313199	FE MORAN INC FIRE PROTECTION	SERVICES - FD	10,240.00
8687(A)	FERGUSON WATERWORKS	TOOLS - PW	1,825.90
313151	FIELDS JEEP INC/FIELDS CHRYSLER	PARTS - PD	1,218.56
8660(A)	FIRE SAFETY CONSULTANTS INC	SERVICES - FD/DPS (*)	5,705.00
8664(A)	FIRST CHOICE COFFEE SERVICES	CANTEEN - PD/GG	1,208.07
313152	FOSTER COACH SALES INC	PARTS - FD	319.17
8639(A)	GALLS LLC	UNIFORMS - PD	1,492.23
8685(A)	GENUINE PARTS COMPANY INC	PARTS/SUPPLIES - PW/PD/FD	2,363.86
313269	GEORGE & ANDREA PAPADAKIS	WATER/SEWER REFUND - FIN	767.86
313154	GEWALT HAMILTON ASSOCIATES INC	PROFESSIONAL SERVICES - PW (*)	30,073.60
313153	GOLF MILL FORD	PARTS - PW	2,298.18
313219	GOOD IMPRESSIONS	SUPPLIES - PD	136.50
313223	GORDON FLESCH COMPANY INC	PRINTING - IT (*)	2,614.58
8640(A)	GRAINGER	SUPPLIES - FD/PW	1,822.35
313200	GRANICUS LLC	SOFTWARE SUBSCRIPTION - IT (*)	42,416.92
8671(A)	GRANITE TELECOMMUNICATIONS LLC	TELECOMMUNICATIONS - IT	5,176.48
313265	HANNA LAVRENTSOV	WATER/SEWER REFUND - FIN	4.30
313155	HASTINGS AIR ENERGY CONTROL	SERVICES - FD	2,250.00
8641(A)	HAVEY COMMUNICATIONS INC	EQUIPMENT - PD	5,295.00
313216	HFS BUREAU OF FISCAL OPERATIONS	GEMT MEDICAID AMBULANCE FEE REIMB - FD	15,326.09
8643(A)	HIGHLAND PARK FORD LINCOLN	PARTS - PW/PD	330.71
8688(A)	HODC C/O CRESTWOOD PLACE	HODC CRESTWOOD EXPENSES - FIN (*)	55,643.20
313156	ILLINOIS ENVIRONMENTAL PROTECTION A	PERMIT FEE - PW	1,000.00
313157	ILLINOIS STATE POLICE	SERVICES - FD	108.00
8693(A)	INFOBIP INC	TELECOMMUNICATIONS - IT	7,314.82
8691(A)	INTERIORS FOR BUSINESS INC	EQUIPMENT - PW/FD	2,398.21
313158	INTERSTATE ALL BATTERY CENTER	SUPPLIES - PW	84.24
313227	ITRON	SYSTEM MAINTENANCE - PW	777.48
313256	JACK MORAN	REIMBURSEMENT - FD	806.11
313241	JAKE PAWLICKI	REIMBURSEMENT - PD	105.74
313268	JEROME HANNON	WATER/SEWER REFUND - FIN	4.30
313242	JESSICA ARIAS	REIMBURSEMENT - PD	173.77
313159	JG UNIFORMS INC	UNIFORMS - PD	953.30
313243	JOHN SEILER	REIMBURSEMENT - PD	127.08
313195	JONES & BARTLETT LEARNING LLC	PUBLICATIONS - FD	80.96
8689(A)	JOSEPH KLEMM	PSEBA BENEFIT REIMBURSEMENT - GG	1,758.54
313253	JOSEPH RIZZO	REIMBURSEMENT - PW	30.00
8683(A)	KAPLAN PAVING LLC	SERVICES - PW	3,856.00
8678(A)	KASPER HOLMES & DRING LTD	LOBBY PROFESSIONAL SERVICES - GG	7,000.00
313235	KEVIN DINEEN	ANIMAL TAG REFUND - FIN	10.00
313244	KEVIN MENDOZA	REIMBURSEMENT - PD	28.62
8644(A)	KIESLER POLICE SUPPLY INC	UNIFORM - PD	469.26
313160	LAKE COUNTY PUBLIC WORKS DEPT	SERVICES - PW	86.00
8645(A)	LAUTERBACH & AMEN LLP	PROFESSIONAL SERVICES - FIN	13,500.00
313218	LAW ENFORCEMENT TRAINING LLC	SUBSCRIPTION - PD	3,960.00
313214	LINDE GAS & EQUIPMENT INC	SUPPLIES - PW/FD	842.49
8646(A)	LOGSDON OFFICE SUPPLY	SUPPLIES - PW/FD	832.94
8667(A)	MACQUEEN EMERGENCY GROUP	PARTS - FD	2,195.99
313225	MARK 1 LANDSCAPE INC	SERVICES - PW (*)	6,187.96
313257	MATTHEW SALOMONSON	REIMBURSEMENT - FD	758.60
313258	MAXWELL OBERMAN	REIMBURSEMENT - FD	581.29
8647(A)	MEADE INC	SERVICES - PW (*)	3,059.76
313161	MENARDS - LONG GROVE	SUPPLIES - PW	127.03
313162	MENONI & MOCOGNI INC	MATERIALS - PW (*)	6,974.20
8648(A)	MGP INC	PROFESSIONAL SERVICES - PW (*)	20,784.26
313215	MICHIO MURAKISHI	PROFESSIONAL SERVICES - DPS (*)	23,353.75

VILLAGE OF NORTHBROOK

GENERAL LEDGER SYSTEM
WARRANT LIST

INVOICES PROCESSED BETWEEN JUNE 16, 2026 - JUNE 30, 2026
FOR 7/14/26 MEETING

Sorted Alphabetically

CHECK NUMBER	VENDOR NAME	PURPOSE	AMOUNT
313205	MICRO-TEL INC	ANNUAL MAINTENANCE - IT	2,108.00
8649(A)	MID AMERICAN WATER OF WAUCONDA INC	PARTS - PW	2,678.21
313213	MIDWEST POWER INDUSTRY INC	SERVICES - PW	660.00
313245	MILLIE GOMEZ	REIMBURSEMENT - PD	188.03
313164	MONROE TRUCK EQUIPMENT INC	EQUIPMENT - PW	4,144.87
8650(A)	MORRISON ASSOCIATES LTD	TRAINING - PW	750.00
8651(A)	MOTION INDUSTRIES INC	PARTS - PW	1,254.17
313231	MRI SOFTWARE LLC	AWM NETWORK SERVICES - PW	36,000.00
8665(A)	MUNICIPALH20	PROFESSIONAL SERVICES - PW (*)	6,200.00
313246	NICHOLE OCHAB	REIMBURSEMENT - PD	83.12
313170	NICOR	UTILITIES - PW	65.85
313165	NIPSTA	PROFESSIONAL SERVICES/TRAINING - FD/PD/PW	33,653.75
313166	NIPSTA	TRAINING - FD	4,300.00
313167	NIPSTA	TRAINING - FD	1,050.00
313168	NORTAF	MEMBERSHIP - PD	6,600.00
313172	NORTH SHORE GAS COMPANY	UTILITIES - PW	280.36
8652(A)	NORTHEASTERN IL REGIONAL CRIME LAB	MEMBERSHIP - PD (*)	55,833.00
313171	NORTHERN IL POLICE ALARM SYSTEM	PROFESSIONAL SERVICES - PD	93.20
313175	NORTHWEST FREIGHTLINER	PARTS - FD	130.98
313174	NORTHWEST MUNICIPAL CONFERENCE	RECEPTIONS & EVENTS - GG	125.00
313208	OFFICE DEPOT LLC	EQUIPMENT - PD	2,449.93
313180	OFFICE OF THE STATE FIRE MARSHAL	SERVICES - PW	100.00
313247	OLIVIA SANKIEWICZ	REIMBURSEMENT - PD	241.86
313212	PACE ANALYTICAL SERVICES LLC	SERVICES - PW (*)	920.00
313210	PACE ANALYTICAL SERVICES LLC	SERVICES - PW	225.00
313211	PACE ANALYTICAL SERVICES LLC	SERVICES - PW (*)	150.00
313209	PACE ANALYTICAL SERVICES LLC	SERVICES - PW	74.00
313177	PERR TRUCK & TRAILER BODY INC	SERVICES - PW	4,197.00
8653(A)	POMPS TIRE SERVICE INC	TIRES - FD/PW	5,483.32
313201	PROFESSIONAL CEMETERY SERVICES	SERVICES - PW	1,250.00
8677(A)	RAINBOW ECOSCIENCE	SERVICES - PW	16,641.30
313178	REGIONAL EMERGENCY DISPATCH CENTER	DISPATCH - FD	64,690.00
313248	RICHARD RASH	REIMBURSEMENT - PD	99.99
313203	RICKMAN CONTRACT SERVICES INC	SERVICES - FIN (*)	6,900.00
8684(A)	ROBE INC	WATER PLANT PARTS REPLACEMENT - PW (*)	77,042.54
313259	ROBERT KINCAID	REIMBURSEMENT - FD	54.06
8635(A)	ROSE MARY JURINEK	COURT REPORTING - PD	1,080.00
313234	SARAH BARTO	ANIMAL TAG REFUND - FIN	10.00
313176	SCHROEDER ASPHALT SERVICES INC	ASPHALT ST REHABILITATION - PW (*)	347,049.14
313260	SCOTT WILSON	REIMBURSEMENT - FD	41.00
8654(A)	SNAP ON INDUSTRIAL	TOOLS - PW	1,333.85
313232	SPARTAN TURF PRODUCTS LLC	PARTS - PW	154.42
313249	STAN FERGUSON	REIMBURSEMENT - PD	422.15
313179	STANDARD EQUIPMENT COMPANY	PARTS - PW	1,816.90
313181	STATE TREASURER	INTERGOVERNMENTAL COST SHARING - PW (*)	8,357.16
313267	STEVEN MALMAN	WATER/SEWER REFUND - FIN	4,082.87
313182	STREICHERS INC	UNIFORMS - PD	514.98
313183	SUNSET FOOD MART INC	SUPPLIES - PW/PD	198.95
8690(A)	SWANSONS BLOSSOM SHOP	SERVICES - FD	320.00
313184	TAPCO	SUPPLIES - PW	1,885.00
313250	TERESA DREWES	UNIFORM ALLOWANCE - PD	479.67
313236	TERRI SCHWART	ANIMAL TAG REFUND - FIN	10.00
8672(A)	THE ORGANIC GARDENER LTD	PROFESSIONAL SERVICES - DPS	867.00
313261	THOMAS MORAN	REIMBURSEMENT - FD	800.45
313185	THOMPSON ELEVATOR INSP SVC INC	SERVICES - DPS (*)	915.00
313206	TODAYS UNIFORMS INC	UNIFORMS - FD (*)	4,541.40
313251	TODD FEINGOLD	UNIFORM ALLOWANCE - PD	479.67
8656(A)	TOTAL PARKING SOLUTIONS INC	PARKING METER MAINTENANCE - PW (*)	5,108.00
8682(A)	TUSKER TECHNOLOGY	SYSTEM MAINTENANCE - IT	3,298.62

VILLAGE OF NORTHBROOK

GENERAL LEDGER SYSTEM
WARRANT LIST

INVOICES PROCESSED BETWEEN JUNE 16, 2026 - JUNE 30, 2026
FOR 7/14/26 MEETING

Sorted Alphabetically

CHECK NUMBER	VENDOR NAME	PURPOSE	AMOUNT
313190	ULTRA STROBE COMMUNICATIONS INC	EQUIPMENT - PD	3,910.00
8642(A)	USABLUEBOOK	SUPPLIES - PW	132.49
8657(A)	USALCO	CHEMICALS - PW (*)	4,790.86
8679(A)	VEREGY CENTRAL LLC	AUTOMATED WATER METER PROJECT - PW (*)	103,368.64
313204	VERIZON CONNECT NWF INC	SERVICES - PW	831.15
313186	VERIZON WIRELESS	TELECOMMUNICATIONS - IT	833.87
8634(A)	VESTIS SERVICES LLC	UNIFORMS - DPS	55.09
313226	WASHINGTON UNIVERSITY	MEMBERSHIP- GG	750.00
8681(A)	WATERSMART SOFTWARE INC	MONTHLY SERVICES - PW	224.88
313191	WATERWAY GAS AND WASH COMPANY	SERVICES - PW	162.25
313207	WAUCONDA ANIMAL HOSPITAL	K-9 CARE - PD	941.00
8655(A)	WEIDNER FARMS MATERIAL INC	MATERIALS AND DISPOSAL - PW (*)	9,036.88
313252	WILLIAM HUMPHRIES	UNIFORM ALLOWANCE - PD	479.67
313189	WINKLERS TREE SERVICE INC	SERVICES - PW	505.00
313197	YELLOWSTONE LANDSCAPE	SERVICES - PW (*)	52,728.44
		CLASS 'A' TOTAL	**1,536,430.90**

CLASS 'B' WARRANTS

536(E)	HOME DEPOT CREDIT SERVICES	SUPPLIES - PW	58.96
34(E)	HUNTINGTON NATIONAL BANK	VILLAGE CREDIT CARD MAY - FIN	30,926.48
6/30/26	PAYROLL	6/30/2026 PAYROLL	943,389.47
534(E)	QUADIENT LEASING USA INC	MAILING SYSTEM LEASE - FIN	1,667.85
535(E)	WEX BANK	FUEL - PD/PW/FD	25,851.11
		CLASS 'B' TOTAL	**1,001,893.87**
		REPORT TOTAL	***2,538,324.77***

VILLAGE OF NORTHBROOK

GENERAL LEDGER SYSTEM
WARRANT LIST

INVOICES PROCESSED BETWEEN JUNE 16, 2026 - JUNE 30, 2026
FOR 7/14/26 MEETING

Sorted by Invoice Amount

CHECK NUMBER	VENDOR NAME	PURPOSE	AMOUNT
313176	SCHROEDER ASPHALT SERVICES INC	ASPHALT ST REHABILITATION - PW (*)	347,049.14
8679(A)	VEREGY CENTRAL LLC	AUTOMATED WATER METER PROJECT - PW (*)	103,368.64
313193	AXON ENTERPRISE INC	EQUIPMENT/SUBSCRIPTION - PD (*)	91,791.78
8684(A)	ROBE INC	WATER PLANT PARTS REPLACEMENT - PW (*)	77,042.54
313178	REGIONAL EMERGENCY DISPATCH CENTER	DISPATCH - FD	64,690.00
8652(A)	NORTHEASTERN IL REGIONAL CRIME LAB	MEMBERSHIP - PD (*)	55,833.00
8688(A)	HODC C/O CRESTWOOD PLACE	HODC CRESTWOOD EXPENSES - FIN (*)	55,643.20
313197	YELLOWSTONE LANDSCAPE	SERVICES - PW (*)	52,728.44
8668(A)	ELROD FRIEDMAN LLP	LEGAL SERVICES - GG/DPS	50,749.50
313200	GRANICUS LLC	SOFTWARE SUBSCRIPTION - IT (*)	42,416.92
313231	MRI SOFTWARE LLC	AWM NETWORK SERVICES - PW	36,000.00
313165	NIPSTA	PROFESSIONAL SERVICES/TRAINING - FD/PD/PW	33,653.75
313154	GEWALT HAMILTON ASSOCIATES INC	PROFESSIONAL SERVICES - PW (*)	30,073.60
313215	MICHIO MURAKISHI	PROFESSIONAL SERVICES - DPS (*)	23,353.75
8669(A)	B&B HOLIDAY DECORATING LLC	SERVICES - PW (*)	23,147.50
8648(A)	MGP INC	PROFESSIONAL SERVICES - PW (*)	20,784.26
8636(A)	BS&A SOFTWARE	PAYMENT PROCESSING SERVICES - FIN (*)	18,957.30
8662(A)	ATLAS ENGINEERING GROUP LTD	BRIDGE INSPECTION - PW (*)	18,649.25
8673(A)	ADDIS LAW GROUP	LEGAL SERVICES - GG	17,000.00
8677(A)	RAINBOW ECOSCIENCE	SERVICES - PW	16,641.30
313216	HFS BUREAU OF FISCAL OPERATIONS	GEMT MEDICAID AMBULANCE FEE REIMB - FD	15,326.09
313229	CONTINENTAL RESOURCES INC	EQUIPMENT - IT	14,117.96
8645(A)	LAUTERBACH & AMEN LLP	PROFESSIONAL SERVICES - FIN	13,500.00
313199	FE MORAN INC FIRE PROTECTION	SERVICES - FD	10,240.00
8630(A)	ADVANCED TREE CARE	SERVICES - PW (*)	10,114.02
313222	DRAIN & PLUMBING SERVICES	SERVICES - PW (*)	9,758.59
8655(A)	WEIDNER FARMS MATERIAL INC	MATERIALS AND DISPOSAL - PW (*)	9,036.88
8631(A)	AIR ONE EQUIPMENT INC	SUPPLIES/EQUIPMENT - FD	8,515.00
313181	STATE TREASURER	INTERGOVERNMENTAL COST SHARING - PW (*)	8,357.16
8666(A)	AMAZON.COM SERVICES	EQUIPMENT/SUPPLIES - PW/PD/IT/FIN/FD/DPS	7,673.48
8693(A)	INFOBIP INC	TELECOMMUNICATIONS - IT	7,314.82
8678(A)	KASPER HOLMES & DRING LTD	LOBBY PROFESSIONAL SERVICES - GG	7,000.00
313162	MENONI & MOCOGNI INC	MATERIALS - PW (*)	6,974.20
313203	RICKMAN CONTRACT SERVICES INC	SERVICES - FIN (*)	6,900.00
8632(A)	ALEXANDER CHEMICAL CORPORATION	CHEMICALS - PW (*)	6,648.16
313168	NORTAF	MEMBERSHIP - PD	6,600.00
8665(A)	MUNICIPALH20	PROFESSIONAL SERVICES - PW (*)	6,200.00
313146	COMMONWEALTH EDISON COMPANY	UTILITIES - PW	6,191.19
313225	MARK 1 LANDSCAPE INC	SERVICES - PW (*)	6,187.96
8660(A)	FIRE SAFETY CONSULTANTS INC	SERVICES - FD/DPS (*)	5,705.00
8670(A)	CLARK HILL PLC	LEGAL SERVICES - GG	5,563.50
8653(A)	POMPS TIRE SERVICE INC	TIRES - FD/PW	5,483.32
8641(A)	HAVEY COMMUNICATIONS INC	EQUIPMENT - PD	5,295.00
8671(A)	GRANITE TELECOMMUNICATIONS LLC	TELECOMMUNICATIONS - IT	5,176.48
8656(A)	TOTAL PARKING SOLUTIONS INC	PARKING METER MAINTENANCE - PW (*)	5,108.00
8657(A)	USALCO	CHEMICALS - PW (*)	4,790.86
313148	CUTLER WORKWEAR	UNIFORMS - PW (*)	4,633.99
313206	TODAYS UNIFORMS INC	UNIFORMS - FD (*)	4,541.40
313166	NIPSTA	TRAINING - FD	4,300.00
313169	ACE HARDWARE & RENTAL	EQUIPMENT/SUPPLIES - PW/FD/PD	4,199.57
313177	PERR TRUCK & TRAILER BODY INC	SERVICES - PW	4,197.00
313164	MONROE TRUCK EQUIPMENT INC	EQUIPMENT - PW	4,144.87
313267	STEVEN MALMAN	WATER/SEWER REFUND - FIN	4,082.87
313218	LAW ENFORCEMENT TRAINING LLC	SUBSCRIPTION - PD	3,960.00
313190	ULTRA STROBE COMMUNICATIONS INC	EQUIPMENT - PD	3,910.00
8683(A)	KAPLAN PAVING LLC	SERVICES - PW	3,856.00
8692(A)	CAPTRUST FINANCIAL ADVISORS	PROFESSIONAL SERVICES - GG	3,750.00
8686(A)	BILLS PLUMBING & SEWER INC	SERVICES - PW	3,565.00
8682(A)	TUSKER TECHNOLOGY	SYSTEM MAINTENANCE - IT	3,298.62

VILLAGE OF NORTHBROOK

GENERAL LEDGER SYSTEM
WARRANT LIST

INVOICES PROCESSED BETWEEN JUNE 16, 2026 - JUNE 30, 2026
FOR 7/14/26 MEETING

Sorted by Invoice Amount

CHECK NUMBER	VENDOR NAME	PURPOSE	AMOUNT
8637(A)	COMCAST	TELECOMMUNICATIONS - IT	3,104.57
8647(A)	MEADE INC	SERVICES - PW (*)	3,059.76
313202	911 TECH INC	SUBSCRIPTION - PD	3,056.13
8676(A)	DACRA TECH LLC	SUBSCRIPTION - IT	2,750.00
8649(A)	MID AMERICAN WATER OF WAUCONDA INC	PARTS - PW	2,678.21
313223	GORDON FLESCH COMPANY INC	PRINTING - IT (*)	2,614.58
313208	OFFICE DEPOT LLC	EQUIPMENT - PD	2,449.93
8691(A)	INTERIORS FOR BUSINESS INC	EQUIPMENT - PW/FD	2,398.21
8685(A)	GENUINE PARTS COMPANY INC	PARTS/SUPPLIES - PW/PD/FD	2,363.86
313143	CASE LOTS INC	SUPPLIES - PW	2,361.80
313153	GOLF MILL FORD	PARTS - PW	2,298.18
313155	HASTINGS AIR ENERGY CONTROL	SERVICES - FD	2,250.00
8667(A)	MACQUEEN EMERGENCY GROUP	PARTS - FD	2,195.99
8674(A)	BIG BELLY SOLAR LLC	TRASH/RECYCLING RECEPTACLES - PW (*)	2,171.98
313205	MICRO-TEL INC	ANNUAL MAINTENANCE - IT	2,108.00
313192	CUMMINS SALES & SERVICE	PARTS - PW	1,987.29
8694(A)	DIAZ GROUP LLC	SERVICES - PW (*)	1,942.00
313184	TAPCO	SUPPLIES - PW	1,885.00
8687(A)	FERGUSON WATERWORKS	TOOLS - PW	1,825.90
8640(A)	GRAINGER	SUPPLIES - FD/PW	1,822.35
313179	STANDARD EQUIPMENT COMPANY	PARTS - PW	1,816.90
8689(A)	JOSEPH KLEMM	PSEBA BENEFIT REIMBURSEMENT - GG	1,758.54
313150	EL-COR INDUSTRIES INC	PARTS - PW	1,672.47
313196	BUILDERS ASPHALT LLC	MATERIALS - PW (*)	1,629.28
313198	ADS ENVIRONMENTAL SERVICES	SERVICES - PW	1,500.00
8639(A)	GALLS LLC	UNIFORMS - PD	1,492.23
8654(A)	SNAP ON INDUSTRIAL	TOOLS - PW	1,333.85
8651(A)	MOTION INDUSTRIES INC	PARTS - PW	1,254.17
313201	PROFESSIONAL CEMETERY SERVICES	SERVICES - PW	1,250.00
313151	FIELDS JEEP INC/FIELDS CHRYSLER	PARTS - PD	1,218.56
8664(A)	FIRST CHOICE COFFEE SERVICES	CANTEEN - PD/GG	1,208.07
8633(A)	ALPHA PRIME COMMUNICATIONS	RADIO LICENSE - PW	1,200.00
8638(A)	CDW GOVERNMENT INC	EQUIPMENT - IT	1,116.46
8635(A)	ROSE MARY JURINEK	COURT REPORTING - PD	1,080.00
313167	NIPSTA	TRAINING - FD	1,050.00
313156	ILLINOIS ENVIRONMENTAL PROTECTION A	PERMIT FEE - PW	1,000.00
313159	JG UNIFORMS INC	UNIFORMS - PD	953.30
313207	WAUCONDA ANIMAL HOSPITAL	K-9 CARE - PD	941.00
313212	PACE ANALYTICAL SERVICES LLC	SERVICES - PW (*)	920.00
313185	THOMPSON ELEVATOR INSP SVC INC	SERVICES - DPS (*)	915.00
8672(A)	THE ORGANIC GARDENER LTD	PROFESSIONAL SERVICES - DPS	867.00
313214	LINDE GAS & EQUIPMENT INC	SUPPLIES - PW/FD	842.49
313186	VERIZON WIRELESS	TELECOMMUNICATIONS - IT	833.87
8646(A)	LOGSDON OFFICE SUPPLY	SUPPLIES - PW/FD	832.94
313204	VERIZON CONNECT NWF INC	SERVICES - PW	831.15
313256	JACK MORAN	REIMBURSEMENT - FD	806.11
313261	THOMAS MORAN	REIMBURSEMENT - FD	800.45
313227	ITRON	SYSTEM MAINTENANCE - PW	777.48
313269	GEORGE & ANDREA PAPADAKIS	WATER/SEWER REFUND - FIN	767.86
313257	MATTHEW SALOMONSON	REIMBURSEMENT - FD	758.60
8650(A)	MORRISON ASSOCIATES LTD	TRAINING - PW	750.00
313226	WASHINGTON UNIVERSITY	MEMBERSHIP- GG	750.00
313173	ENDEAVOR HEALTH MEDICAL GROUP	PROFESSIONAL SERVICES - FD/PD	748.00
313163	3M COMPANY	SUPPLIES - PW	742.22
313228	ELEGANT MOBILE DETAIL LLC	SERVICES - PD	700.00
313213	MIDWEST POWER INDUSTRY INC	SERVICES - PW	660.00
313144	ARTHUR CLESEN INC	SUPPLIES - PW	659.05
313258	MAXWELL OBERMAN	REIMBURSEMENT - FD	581.29
313264	EMILY & JASON HEMING	WATER/SEWER REFUND - FIN	571.88

VILLAGE OF NORTHBROOK

GENERAL LEDGER SYSTEM
WARRANT LIST

INVOICES PROCESSED BETWEEN JUNE 16, 2026 - JUNE 30, 2026
FOR 7/14/26 MEETING

Sorted by Invoice Amount

CHECK NUMBER	VENDOR NAME	PURPOSE	AMOUNT
313182	STREICHERS INC	UNIFORMS - PD	514.98
8680(A)	CHICAGO PARTS & SOUND ENTERP LLC	PARTS - FD/PD	509.58
313189	WINKLERS TREE SERVICE INC	SERVICES - PW	505.00
313194	ATLAS BOBCAT LLC	PARTS - PW	501.74
313250	TERESA DREWES	UNIFORM ALLOWANCE - PD	479.67
313251	TODD FEINGOLD	UNIFORM ALLOWANCE - PD	479.67
313252	WILLIAM HUMPHRIES	UNIFORM ALLOWANCE - PD	479.67
313188	CINTAS CORPORATION #2	SUPPLIES - PD	475.01
8644(A)	KIESLER POLICE SUPPLY INC	UNIFORM - PD	469.26
313145	COMCAST CABLE	TELECOMMUNICATIONS - IT	465.35
313254	BRENDON BINKLEY	REIMBURSEMENT - FD	429.98
313249	STAN FERGUSON	REIMBURSEMENT - PD	422.15
313230	CONTINENTAL RESOURCES INC	EQUIPMENT - IT	396.87
8643(A)	HIGHLAND PARK FORD LINCOLN	PARTS - PW/PD	330.71
8690(A)	SWANSONS BLOSSOM SHOP	SERVICES - FD	320.00
313152	FOSTER COACH SALES INC	PARTS - FD	319.17
313220	ALLIED GARAGE DOOR INC	SERVICES - PW	295.00
313217	AMERICAN TAXI DISPATCH INC	SENIOR TRANSPORTATION - FIN	295.00
313172	NORTH SHORE GAS COMPANY	UTILITIES - PW	280.36
313224	ATLASTICITY LLC	SUBSCRIPTION - IT	254.95
313247	OLIVIA SANKIEWICZ	REIMBURSEMENT - PD	241.86
313210	PACE ANALYTICAL SERVICES LLC	SERVICES - PW	225.00
8681(A)	WATERSMART SOFTWARE INC	MONTHLY SERVICES - PW	224.88
313239	BRADON PRATE	REIMBURSEMENT - PD	214.50
313183	SUNSET FOOD MART INC	SUPPLIES - PW/PD	198.95
313245	MILLIE GOMEZ	REIMBURSEMENT - PD	188.03
313221	ADVANCED AUTO PARTS AND CARQUEST	PARTS - PD	174.99
313242	JESSICA ARIAS	REIMBURSEMENT - PD	173.77
8659(A)	ALPHAGRAPHICS US333	125 ANNIVERSARY BANNER - GG	167.74
313149	DELUXE	SUPPLIES - FIN	162.82
313191	WATERWAY GAS AND WASH COMPANY	SERVICES - PW	162.25
313187	CINTAS CORPORATION #2	UNIFORMS - PW	155.12
313232	SPARTAN TURF PRODUCTS LLC	PARTS - PW	154.42
313240	ERIC GUSTASON	REIMBURSEMENT - PD	150.42
8663(A)	BIO TRON INC	SERVICES - FD	150.00
313211	PACE ANALYTICAL SERVICES LLC	SERVICES - PW (*)	150.00
8658(A)	AW ZENGELER CLEANERS INC	UNIFORMS - PD	137.52
313219	GOOD IMPRESSIONS	SUPPLIES - PD	136.50
8642(A)	USABLUEBOOK	SUPPLIES - PW	132.49
313175	NORTHWEST FREIGHTLINER	PARTS - FD	130.98
313243	JOHN SEILER	REIMBURSEMENT - PD	127.08
313161	MENARDS - LONG GROVE	SUPPLIES - PW	127.03
313174	NORTHWEST MUNICIPAL CONFERENCE	RECEPTIONS & EVENTS - GG	125.00
313157	ILLINOIS STATE POLICE	SERVICES - FD	108.00
313241	JAKE PAWLICKI	REIMBURSEMENT - PD	105.74
313237	ALEXANDER GIARMIDIS	REIMBURSEMENT - PD	103.56
313180	OFFICE OF THE STATE FIRE MARSHAL	SERVICES - PW	100.00
313248	RICHARD RASH	REIMBURSEMENT - PD	99.99
313171	NORTHERN IL POLICE ALARM SYSTEM	PROFESSIONAL SERVICES - PD	93.20
313147	COOK COUNTY RECORDER OF DEEDS	RECORDING FEES - DPS	93.00
313160	LAKE COUNTY PUBLIC WORKS DEPT	SERVICES - PW	86.00
313158	INTERSTATE ALL BATTERY CENTER	SUPPLIES - PW	84.24
313246	NICHOLE OCHAB	REIMBURSEMENT - PD	83.12
313195	JONES & BARTLETT LEARNING LLC	PUBLICATIONS - FD	80.96
8661(A)	CABCONNECT	SENIOR TRANSPORTATION - FIN	75.90
313209	PACE ANALYTICAL SERVICES LLC	SERVICES - PW	74.00
313233	DATAVANT LLC	SERVICES - PD	68.10
313170	NICOR	UTILITIES - PW	65.85
313255	BRYAN HENNESSY	REIMBURSEMENT - FD	60.40

VILLAGE OF NORTHBROOK

GENERAL LEDGER SYSTEM
WARRANT LIST

INVOICES PROCESSED BETWEEN JUNE 16, 2026 - JUNE 30, 2026
FOR 7/14/26 MEETING

Sorted by Invoice Amount

CHECK NUMBER	VENDOR NAME	PURPOSE	AMOUNT
8634(A)	VESTIS SERVICES LLC	UNIFORMS - DPS	55.09
313259	ROBERT KINCAID	REIMBURSEMENT - FD	54.06
313260	SCOTT WILSON	REIMBURSEMENT - FD	41.00
313238	ANGELIKA MCGEE	REIMBURSEMENT - PD	30.45
313253	JOSEPH RIZZO	REIMBURSEMENT - PW	30.00
313244	KEVIN MENDOZA	REIMBURSEMENT - PD	28.62
8675(A)	CONSTELLIX	SUBSCRIPTION - IT	12.53
313235	KEVIN DINEEN	ANIMAL TAG REFUND - FIN	10.00
313234	SARAH BARTO	ANIMAL TAG REFUND - FIN	10.00
313236	TERRI SCHWART	ANIMAL TAG REFUND - FIN	10.00
313263	ERIN COOPER	WATER/SEWER REFUND - FIN	9.60
313266	CHRIS GLASER	WATER/SEWER REFUND - FIN	4.30
313262	DANIEL & LAUREN FINKEL	WATER/SEWER REFUND - FIN	4.30
313265	HANNA LAVRENTSOV	WATER/SEWER REFUND - FIN	4.30
313268	JEROME HANNON	WATER/SEWER REFUND - FIN	4.30
		CLASS 'A' TOTAL	**1,536,430.90**

CLASS 'B' WARRANTS

6/30/26	PAYROLL	6/30/2026 PAYROLL	943,389.47
34(E)	HUNTINGTON NATIONAL BANK	VILLAGE CREDIT CARD MAY - FIN	30,926.48
535(E)	WEX BANK	FUEL - PD/PW/FD	25,851.11
534(E)	QUADIENT LEASING USA INC	MAILING SYSTEM LEASE - FIN	1,667.85
536(E)	HOME DEPOT CREDIT SERVICES	SUPPLIES - PW	58.96
		CLASS 'B' TOTAL	**1,001,893.87**
		REPORT TOTAL	***2,538,324.77***

MEMORANDUM

To: Village Board of Trustees
From: Deputy Village Manager Jim Hawkins
Date: 2026-07-14
Subject: A Resolution Approving A Voluntary Retirement Agreement

Overview
The Village desires to enter into a Voluntary Retirement Agreement with Village Manager Cara Pavlicek

Fiscal Impact

Recommendation
Approval.

Strategic Priority
Connected Community: Deliver proactive and open communication and engagement in Village business and services to advance knowledge, participation, and belonging.

Background
On June 23, 2026, following a longstanding record of public service to the Village and to communities in the State of Illinois, Village Manager Cara Pavlicek ("Ms. Pavlicek") notified the Village of her desire to retire from service as a public employee. Although Ms. Pavlicek's Employment Agreement sets forth the terms and conditions of her employment, including the benefits she would receive if she "resigns," the Employment Agreement does not set forth the benefits that Ms. Pavlicek would receive if she "retires" from the Village. As such, the Village and Ms. Pavlicek desire to enter into an agreement to clearly identify the terms of Ms. Pavlicek's retirement, the services she will provide to the Village prior to the effective date of her retirement, and the benefits she will receive from the Village as a retiree.

A Resolution Approving A Voluntary Retirement Agreement
Exhibit A - Voluntary Retirement Agreement

Resolution 2026-__

BE IT RESOLVED by the President and Board of Trustees of the Village of Northbrook, County of Cook and State of Illinois, THAT:

A Resolution Approving A Voluntary Retirement Agreement

is hereby adopted, as follows:

Section 1. RECITALS.

The Village of Northbrook ("***Village***") is a home rule municipality in accordance with Article VII, Section 6 of the Constitution of the State of Illinois of 1970.

Cara Pavlicek ("***Ms. Pavlicek***") currently serves as the Village Manager for the Village and, on June 23, 2026, Ms. Pavlicek notified the Village of her desire to retire from service as a public employee.

Ms. Pavlicek and the Village are parties to a "Village Manager Employment Agreement" ("***Employment Agreement***"), which sets forth the terms and conditions of Ms. Pavlicek's employment, including the benefits she would receive if she "resigns," however, the Employment Agreement does not set forth the benefits that Ms. Pavlicek would receive if she "retires" from the Village.

The Village recognizes Ms. Pavlicek's longstanding record of public service to the Village and to communities in the State of Illinois and the parties agree that retirement causes unique issues to arise, including the administration of benefits under the Illinois Municipal Retirement Fund ("***IMRF***").

The Village and Ms. Pavlicek desire to enter into an agreement to clearly identify the terms of Ms. Pavlicek's retirement, the services she will provide to the Village prior to the effective date of her retirement, and the benefits she will receive from the Village as a retiree ("***Separation Agreement***").

The President and the Board of Trustees have considered the Separation Agreement and determined that it is in the best interests of the Village and the public to approve the Separation Agreement. These matters pertain to the Village's government and affairs and are approved pursuant to the Village's home rule powers under the Illinois Constitution of 1970.

Section 2. APPROVAL OF SEPARATION AGREEMENT.

The Separation Agreement between the Village and Ms. Pavlicek shall be, and is hereby, approved in substantially the form attached hereto as ***Exhibit A***.

Section 3. EXECUTION OF SEPARATION AGREEMENT.

The Village President and Village Clerk are hereby authorized and directed to execute and seal, on behalf of the Village, the Separation Agreement.

Section 4. EFFECTIVE DATE.

The approval of this Resolution shall be in full force and effect following its passage by the Board of Trustees in the manner provided by law.

Adopted:

RESULT:
MOVER:
SECONDER:
AYES:
ABSTAIN:
ABSENT:
AWAY:

ATTEST:

Village President

Village Clerk

EXHIBIT A

Separation Agreement

VOLUNTARY RETIREMENT AGREEMENT

WHEREAS, Cara Pavlicek ("Ms. Pavlicek") is the Village Manager for the Village of Northbrook, Illinois ("Village"); and

WHEREAS, Ms. Pavlicek and the Village are parties to a "Village Manager Employment Agreement" (the "Employment Agreement") which sets forth the terms and conditions of Ms. Pavlicek's employment, including the benefits she would receive if she "resigns;" and

WHEREAS, the "Employment Agreement" does not set forth the benefits that Ms. Pavlicek would receive if she "retires" from the Village; and

WHEREAS, the parties agree that retirement causes unique issues to arise, including but not limited to the administration of benefits under the Illinois Municipal Retirement Fund ("IMRF"); and

WHEREAS, on June 23, 2026, Ms. Pavlicek notified the Village of her desire to retire from service as a public employee; and

WHEREAS, the Village recognizes Ms. Pavlicek's longstanding record of public service to the Village and to communities in the State of Illinois; and

WHEREAS, the parties mutually desire to clearly identify the terms of Ms. Pavlicek's retirement, the services she will provide to the Village prior to the effective date of her retirement, and the benefits she will receive from the Village as a retiree;

NOW, THEREFORE, in consideration of the mutual promises herein contained and other good and valuable consideration, the sufficiency of which is acknowledged, the parties hereby agree as follows:

1) Ms. Pavlicek notified the Village of her intent to retire, and the Village has accepted her notice of intent to retire on June 23, 2026. The parties have agreed that Ms. Pavlicek's final day of employment shall be at the close of business on September 29, 2026. The Village and Ms. Pavlicek hereby agree to replace any separation benefits in her Employment Agreement associated with her "resignation" with the benefits that are instead provided in this Voluntary Retirement Agreement ("Retirement Agreement.")

2) If Ms. Pavlicek signs this Agreement and does not revoke it pursuant to paragraph 7(e) below, the parties agree to the following consideration:

    a) Instead of the sixty (60) day notice period that would be required for a "resignation," under the Employment Agreement, Ms. Pavlicek's last scheduled day of work in the office shall be September 4, 2026. The Village will pay Ms. Pavlicek her ordinary salary for all work performed through September 4, 2026, including the use of any scheduled benefit time. Ms. Pavlicek has requested and the Village approves her use of personal leave July 20-24, 2026, which will deplete her personal leave bank to 7.5

hours. The additional 7.5 hours of personal leave will be scheduled by Ms. Pavlicek to be used prior to September 4. The Village agrees that Ms. Pavlicek will use her accrued, unused vacation leave beginning on September 4 and ending on September 29, 2026. The parties agree that at the end of her vacation on September 29, her vacation accruals will be depleted and no pay shall be owed for unused vacation time. During this vacation time, Ms. Pavlicek agrees to be available to answer any questions that may be brought forward by the Acting Village Manager or the Village to assist with the orderly transition of responsibilities to the Acting Village Manager.

b) The Village agrees Ms. Pavlicek will remain enrolled in the Village's health insurance plan paying the normal employee contributions to the cost of her health insurance coverage through October 31, 2026. Beginning November 1, 2026, Ms. Pavlicek shall be eligible for health insurance continuation coverage as a retiree under the Illinois Insurance Code on the same terms and conditions as any other retiree of the Village.

c) The Village agrees to forgive the remaining balance on the Promissory Note referenced in Section 9(B) of the Employment Agreement.

d) The Village agrees to pay Ms. Pavlicek's Illinois City/County Management Association ("ILCMA") membership fee for the 12-month period ending August 30, 2027.

e) The Village agrees to coordinate with Ms. Pavlicek and IMRF to convert her unused sick leave into IMRF Service Credit. Ms. Pavlicek understands that the conversion of sick leave into Service Credit is governed by IMRF Rules and Regulations. As of June 30, 2026, it is forecast that Ms. Pavlicek will have 399.75 hours of sick leave that is eligible to be converted into service credits, if she does not use any sick leave between June 30 and September 4, 2026.

f) Between the date of execution of this Retirement Agreement and Ms. Pavlicek's retirement on September 29, 2026, the Village shall not seek to terminate Ms. Pavlicek "Without Cause," as defined under the terms of her Employment Agreement. The only basis for termination of employment prior to September 29 would be if, after the date of execution of this Retirement Agreement, there develops a sufficient basis for a "Termination for Just Cause" as defined in Section 11(B) of the Employment Agreement. The Village represents that it is not currently aware of any facts or circumstances that would give rise to a Termination for Just Cause, as defined in the Employment Agreement. If Ms. Pavlicek is Terminated for Just Cause as defined in the Employment Agreement, then Ms. Pavlicek will still receive the retirement benefits described in Sub-paragraphs 2(a-e) of this Retirement Agreement, but she will not receive any wages from the Village between the effective date of her Termination for Just Cause and September 4, 2026. Any dispute regarding a Termination for Just Cause shall be resolved using the dispute resolution procedures in the Employment Agreement.

g) The Village will continue to pay Ms. Pavlicek's telephone stipend in the amount of $65 per month through September 30, 2026.

3) The parties agree that Ms. Pavlicek has already been compensated for all hours worked, through the payroll date immediately preceding her execution of this Retirement Agreement. Other than her regular pay and vacation pay for the weeks after her execution of this Agreement through September 29, 2026, and the benefits provided in Paragraph 2 above, she shall not be entitled to any further wages or benefits upon separation from employment with the Village.

4) Prior to beginning her vacation at the close of business on September 4, Ms. Pavlicek will make arrangements with the Village President or her designee for the orderly transition of Village business to the Acting Village Manager. She will turn in all Village issued property and equipment, as well as all Village identification cards, badges, passwords to Village systems or equipment, keys and the like by the close of business on September 4, 2026.

5) By signing this Agreement and receiving the valuable consideration described above, Ms. Pavlicek, on behalf of herself, her agents, representatives, assigns, heirs, executors, and administrators, and the Village, including the Village's affiliates, predecessors, successors, representatives, elected officials, attorneys, officers, agents and employees, individually and in their representative capacity hereby fully release and forever discharge each other from any and all claims or liability of any kind arising out of or relating in any way to Ms. Pavlicek's employment with and retirement from employment from the Village, as well as any other occurrence up to and including the date of this Agreement including, but not limited to, any claim arising under the Illinois Municipal Code, 65 ILCS 5/ et seq.; the Illinois Human Rights Act, 775 ILCS 5; the Illinois Wage Payment and Collection Act, 820 ILCS 115; Title VII of the Civil Rights Act of 1964, as amended, 42 U.S.C. § 2000e, et seq.; the Age Discrimination in Employment Act of 1967, 29 U.S.C. §§ 621, et seq.; the Rehabilitation Act of 1973, 29 U.S.C. § 701 et seq.; the Americans with Disabilities Act, 42 U.S.C. § 12101 et seq.; the Family and Medical Leave Act, 29 U.S.C. § 2601 et seq., all claims under 42 U.S.C. §§ 1983, 1985, 1988; all claims under the Village Municipal Code and/or personnel policies; all tort claims; all claims for wrongful discharge; all claims based on any actual or implied contract; all claims for retaliatory discharge; all civil rights claims; all amendments to the foregoing statutes, federal common law and state common law; and claims under any other federal, state or local statute, law, ordinance, regulation or order. It is the intention of Ms. Pavlicek and the Village that in executing this Agreement, the parties are providing each other a general release and that it shall be an effective bar to each and every claim, grievance, demand, and cause of action, either known or unknown, for all acts or omissions of Ms. Pavlicek or the Village and their agents, jointly and separately, individually and in their representative capacities, for any injuries suffered occurring on or prior to the date this Agreement and Release is executed.

Excluded from the above release are any claims or rights which cannot be waived by law, and claims for accrued and fully vested employee benefits and unemployment and workers' compensation benefits. Also excluded from the release is Ms. Pavlicek's right to file a charge with an administrative agency or participate in an agency investigation. Ms. Pavlicek is, however, specifically waiving her right to recover any money in connection with such a charge or investigation. Ms. Pavlicek is also waiving her right to recover money in connection with a charge filed by any other individual or by the Equal Employment Opportunity Commission or any other federal or state agency.

6) The parties agree and acknowledge that this Agreement and the consideration described herein does not constitute and shall not be interpreted as an admission of liability on the part of the Village or Ms. Pavlicek. This Agreement resulted from the parties' mutual desire to resolve any and all matters and controversies between them, and to amicably effectuate Ms. Pavlicek's voluntary retirement from the Village.

7) In compliance with the Older Workers Benefit Protection Act, 29 U.S.C. § 626(f), Ms. Pavlicek acknowledges that she has knowingly and voluntarily signed and entered into this Agreement, and that:

   a) This Agreement is written in a manner calculated to be understood by her, and she understands all of the terms of this Agreement;

   b) In addition to the waiver and release of all other claims, this Agreement results in the wavier of and release by her of all claims arising under the Age Discrimination in Employment Act of 1967, 29 U.S.C. §§ 621, et seq. ("ADEA");

   c) In exchange for the waiver and release by her of all ADEA claims, Ms. Pavlicek is receiving consideration in addition to anything of value to which she already is entitled;

   d) The Village hereby advises Ms. Pavlicek to consult with her attorney regarding the subject matter of this release prior to executing this Agreement; and

   e) Ms. Pavlicek was afforded a period of twenty-one (21) days within which to consider this Agreement, and advised that she may revoke this Agreement within seven (7) calendar days after she signs it by delivering written notice of her revocation to Village President Kathryn Ciesla.

8) This Agreement constitutes the complete Agreement between Ms. Pavlicek and the Village. No other promises or agreements, either express or implied, shall be binding upon such parties unless hereinafter reduced to writing and signed by Ms. Pavlicek and the Village.

9) To the extent that any portion of this Agreement may be held to be invalid or legally unenforceable by a court of competent jurisdiction, Ms. Pavlicek and the Village agree

that the remaining portions of this Agreement shall not be affected and shall be given full force and effect.

10) This Agreement shall be binding upon the Village and Ms. Pavlicek, as well as their respective agents, representatives, heirs, successors and assigns.

11) Ms. Pavlicek acknowledges that she has knowingly and voluntarily signed and entered into this Agreement, and that she understands all of the terms of this Agreement.

AGREED:

CARA PAVLICEK

_____

Cara Pavlicek Date

VILLAGE OF NORTHBROOK, ILLINOIS, an Illinois Municipal Corporation

By: _____

Date

MEMORANDUM

To: Village Manager Cara Pavlicek
From: Public Works Director Kelly Hamill
Date: 2026-07-14
Subject: A Resolution Authorizing the Purchase of LED Streetlight Fixtures from Graybar Electric Company, Inc. of St. Louis, Missouri

Overview
Consistent with the Village's Climate Action Plan, this Resolution authorizes the purchase of approximately 180 LED streetlighting fixtures which will be of the same style and type as those currently used throughout the Village.

Fiscal Impact
The Village's adopted FY27 Budget includes sufficient funds in Account No. 40-7400-531-24 (Traffic Signals and Street Lights) and Account No.11-4100-613-75 (Street Lighting Repairs) for the purchase of approximately 180 residential and roadway lighting fixtures ("Fixtures") rounded up in the amount of $130,000. The attached Exhibit A outlines the unit prices for the street lighting material and included as supplemental information is a map of the conversion area for FY 2026/27. Additionally, the Village will coordinate with ComEd to revise the usage of unmetered street lights and seek a rebate from ComEd.

Account Name	Account Number	Budget	Available	Requested	Remaining	Within Budget
Traffic Signals and Street Lights	40-7400-531-24	$110,250	$110,250	$110,250	$0	Yes
Street Lighting Repairs	11-4100-613-75	$78,000	$78,000	$19,750	$58,250	Yes

The Village is participating in joint purchasing through the Omnia Partners purchasing cooperative. Staff has determined that Omnia Partners purchasing polices satisfy all state and local competitive bidding requirements. Graybar Electric Company, Inc. of St. Louis, MO (*"Vendor"*) submitted the lowest bid for the Material to the Omnia Partners purchasing cooperative.

Recommendation

Approval.

Strategic Priority
Infrastructure. Maintain a consistent high-quality of life through capital investment, continued focus on sustainability, and facilities that meet operational needs.

Background

Installation of the 180 fixtures will be completed by Village staff in the Stone Gate, Highland Woods, Stonebrook, Stonebrook East, Tall Oaks, Windham Manor, Tall Oaks, Rams Gate South, The Courts, Villas west, Villas Salceda, Fox Run, Cobble Wood and Willow Woods Subdivisions. All fixtures come with a five-year warranty and have an estimated lifespan of 100,000 hours of usage. The reduced consumption in kWh is estimated to produce a $20,000 dollar rebate from ComEd.

Purchase of the fixtures will be made through the Omnia Purchasing Cooperative at prices outlined in Exhibit A. These cooperatives competitively bid items and typically offer better pricing than the Village could individually obtain because of the economies of scale involved.

The Village of Northbrook owns and maintains 1,572 residential and roadway street lights of which 923 have been converted to LED. The Village's Climate Action Plan (CAP) action item BE 5-1 outlines the goal for all street lights to be converted to LED by 2030. As part of this initiative, Village staff have identified 180 residential and roadway light fixtures to be converted to LED. Residential lights will be Town and Country models while roadway lights will be the Cobra Head model. Both fixtures will conform to the Village's Engineering Standards.

Staff recommends Village Board approval of a Resolution authorizing the purchase of LED light fixtures in the not-to-exceed amount of $130,000 from Graybar Electric Company, Inc. of St. Louis, Missouri. Staff will be present at the Village Board meeting to address any questions that may arise.

A Resolution Authorizing the Purchase of LED Streetlight Fixtures from Graybar Electric Company, Inc. of St. Louis, MO
Exhibit A - Streetlighting Quote with Unit Pricing
Supplemental Information - 2026 LED Conversion Map Area 5

Resolution 2026 -

BE IT RESOLVED by the President and Board of Trustees of the Village of Northbrook, County of Cook and State of Illinois, THAT:

A Resolution Authorizing the Purchase of LED Streetlight Fixtures from Graybar Electric Company, Inc. of St. Louis, Missouri

is hereby adopted, as follows:

Section 1. Recitals.

The Village's Fiscal Year 2026/27 Budget includes sufficient funds for the purchase of 180 residential and roadway lighting fixtures ("***Material***") to replace old and outdated fixtures. The Village is participating in joint purchasing through the Omnia Partners purchasing cooperative. Public Works staff has determined that Omnia Partners purchasing policies satisfy all state and local competitive bidding requirements. Graybar Electric Company, Inc. of St. Louis, MO (***"Vendor"***) submitted the lowest bid for the Material to the Omnia Partners purchasing cooperative.

The Village's Fiscal Year 2026/27 Budget includes sufficient funds for the purchase of the Material from Account 40-7400-531-24 (Traffic Signals and Street Lights) and Account 11-4100-613-75 (Street Lighting Repairs) for the purchase of 180 LED light fixtures at unit prices listed in ***Exhibit A*** for a not-to-exceed total of $130,000. Based on these factors, Staff recommends that the Village Board authorize the purchase of LED lights as needed from the Vendor.

Section 2. Authorization of Expenditure.

The Village Manager is hereby authorized and directed to execute such documents and make such payments as are necessary to complete procurement of the Material from the Vendor in a not-to exceed amount of $130,000.

Adopted:

RESULT:
MOVER:
SECONDER:
AYES:
NAYS:
ABSTAIN:
ABSENT:
AWAY:

ATTEST:

Village President

Village Clerk

ONE PIERCE PLACE, SUITE 800
ITASCA IL 60143-3149
Phone: 630-671-6000
Fax: 630-671-6953

To: VILLAGE OF NORTHBROOK - ELE
1225 CEDAR LN
NORTHBROOK IL 60062-4513
Attn: Joe Rizzo
Phone: 847-272-5050
Email:
Fax:

Date: 05/14/2026
Project Name: **2026 roadway**
GB Quote #: **2002277370**
Purchase Order Nbr:
Release Nbr:
Additional Ref#:
Revision Nbr:
Valid From: 05/14/2026
Valid To: 06/13/2026
Contact: Mitchell Miguel
Email: mitchell.miguel@graybar.com

Proposal

We appreciate your request and take pleasure in responding as follows

Notes: **VERIFY PART NUMBERS PRIOR TO PURCHASE - BELOW BOM IS SUBJECT TO PRIOR APPROVAL**

Item	ItemType	Quantity	Supplier	Catalog Nbr	Description	Price	Unit	Ext.Price
100		1	CURRENT LIGHTING SOL	ERL1005C740E GRAYA		$267.09	1	$267.09
GB Part#:ERL1005C740EGRAYA								
Item Note: * UPDATED TO GEN 7 - 34 WATT - COMES WITH PHOTOCELL								
200		17	CURRENT LIGHTING SOL	ERL1016C740E GRAYA		$456.96	1	$7,768.32
GB Part#:ERL1016C740EGRAYA								
300		10	CURRENT LIGHTING SOL	ERL1016C740D GRAYA		$456.96	1	$4,569.60
GB Part#:ERL1016C740DGRAYA								
Item Note: * UPDATED TO GEN 7 - 123 WATT - COMES WITH SHORTING CAP								
400		86	CURRENT LIGHTING SOL	EPTT03006AA4 0EPBLCKL		$772.15	1	$66,404.90
GB Part#:EPTT03006AA40EPBLCKL								
Item Note: * NEW GEN 03 FIXTURE - COMES WITH PHOTOCELL								

This equipment and associated installation charges may be financed for a low monthly payment through Graybar Financial Services (subject to credit approval). For more information call 1-800-241-7408 to speak with a leasing specialist.

This Graybar quote is based on the terms of sale in the EV2370 Master Agreement which can be found by clicking the link found at https://www.omniapartners.com/suppliers-files/E-J/Graybar/Contract_Documents/EV2370/EV2370_Graybar_MAD_2017_12_20.pdf

To: VILLAGE OF NORTHBROOK - ELE
1225 CEDAR LN
NORTHBROOK IL 60062-4513
Attn: Joe Rizzo

Date: 05/14/2026
Project Name: **2026 roadway**
GB Quote #: **2002277370**

Proposal

We appreciate your request and take pleasure in responding as follows

Item	ItemType	Quantity	Supplier	Catalog Nbr	Description	Price	Unit	Ext.Price
500		66	CURRENT LIGHTING SOL	EPTT03006AA40DPBLCKL		$772.15	1	$50,961.90

GB Part#:EPTT03006AA40DPBLCKL

Item Note: * NEW GEN 03 FIXTURE - COMES WITH SHORTING CAP

Total in USD (Tax not included): $129,971.81

This equipment and associated installation charges may be financed for a low monthly payment through Graybar Financial Services (subject to credit approval). For more information call 1-800-241-7408 to speak with a leasing specialist.

This Graybar quote is based on the terms of sale in the EV2370 Master Agreement which can be found by clicking the link found at https://www.omniapartners.com/suppliers-files/E-J/Graybar/Contract_Documents/EV2370/EV2370_Graybar_MAD_2017_12_20.pdf

To: VILLAGE OF NORTHBROOK - ELE
1225 CEDAR LN
NORTHBROOK IL 60062-4513
Attn: Joe Rizzo

Date: 05/14/2026
Project Name: 2026 roadway
GB Quote #: 2002277370

Proposal

We appreciate your request and take pleasure in responding as follows

Item	ItemType	Quantity	Supplier	Catalog Nbr	Description	Price	Unit	Ext.Price

Signed:_____

This Graybar quote is based on the terms of sale in the EV2370 Master Agreement which can be found by clicking the link found at https://www.omniapartners.com/suppliers-files/E-J/Graybar/Contract_Documents/EV2370/EV2370_Graybar_MAD_2017_12_20.pdf

northbrook

LED Conversion

New Wattage

- 56W Town & Country (152)
- 37W Cobra Head (1)
- 123W Cobra Head (27)

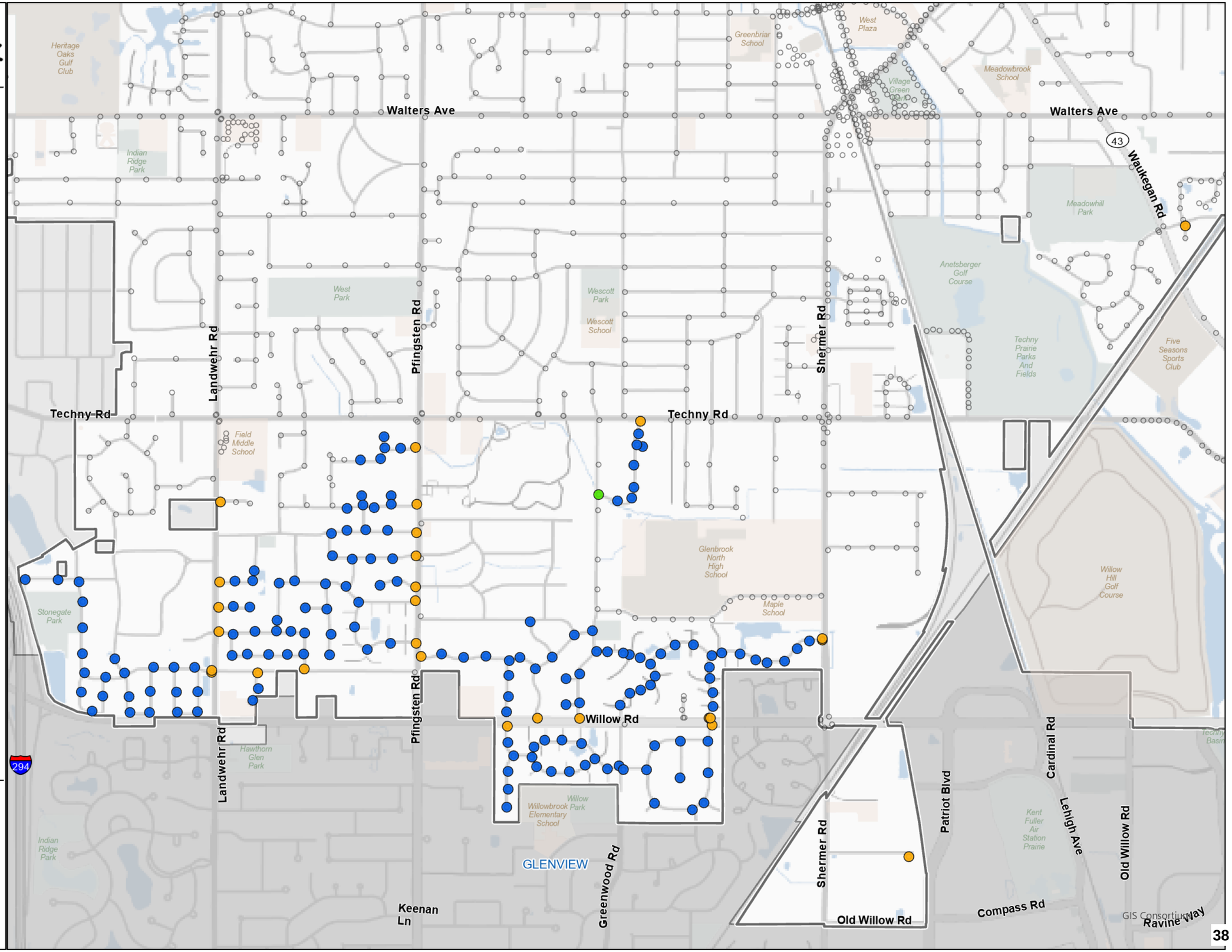

N

0 0.25 0.5 0.75 1

Miles

GIS Consortium

5/22/2026

MEMORANDUM

To: Village Manager Cara Pavlicek
From: Director of Public Works Kelly Hamill
Date: 2026-07-14
Subject: A Resolution Authorizing the Second Renewal of an Agreement for Sewer Lining Services with Hoerr Construction, Inc. of Goodfield, Illinois

Overview
The Village lines segments of its sewers to improve the structural integrity of the main, seal mains from groundwater infiltration, and repair defects as necessary.

Fiscal Impact

The adopted FY27 Budget provides sufficient funds in Sanitary Sewer Fund Account No. 14-4160-723-00 for sewer lining services. Staff is requesting authorization of up to the budgeted amount, for a total spending authority of $245,000. Funds will be drawn from this account as needed at the rates outlined in Exhibit A.

Account	Account No.	Budget	Available	Requested	Remaining	Within Budget
Sanitary Sewer Fund - Sewer Line Construction	14-4160-723-00	$533,450	$526,351	$245,000	$281,351	Yes

Recommendation
Approval.

Strategic Priority
Infrastructure. Maintain a consistent high-quality of life through capital investment, continued focus on sustainability, and facilities that meet operational needs.

Background

As part of its ongoing responsibilities, the Public Works Department maintains 134 miles of sanitary sewer main and 125 miles of stormwater main. Public Works crews routinely clean and televise sanitary sewer mains, inspect and assess the condition of individual sewer segments, identify maintenance needs, and oversee lining activities to help ensure the sanitary and stormwater systems function as designed.

The process of sewer lining involves installing a thin polyester liner into an individual segment of main and allowing it to cure in place. After curing, the liner reinforces the structural integrity of the main, seals it from groundwater infiltration, and repairs any holes or cracks in the pipe. Unlike sewer main replacement work, this work does not require excavation and only causes a minimal amount of interruption to service. While the process is minimally disruptive, due to the specialized equipment and training required to install cured-in-place pipe liners, the Village utilizes contractual services with qualified firms to perform this work. The sewer lining program is an important part of the Village's responsibilities for managing inflow and infiltration under the Metropolitan Water Reclamation District of Greater Chicago's (MWRD's) Watershed Management Ordinance.

In February 2024, Village staff prepared and issued a bid for sewer lining services (“Services”). The Village received five (5) responses and staff determined that Hoerr Construction, Inc. of Goodfield, Illinois (“Contractor”) submitted the lowest, most responsive bid and was awarded the contract for the Services (“Agreement”) with Resolution 2024-82.

The Agreement included an initial term, effective May 14, 2024 through April 30, 2025, with the option for up to three (3) one-year renewals upon mutual consent. Both staff and the Contractor wish to renew the Agreement at the adjusted unit pricing (“Renewal”) outlined in Exhibit A. The term of the second Renewal will be effective July 14, 2026 through April 30, 2027. The second Renewal is included as Exhibit A. Staff will be in attendance at the Village Board meeting for any questions that may arise.

A Resolution Authorizing a Second Renewal of an Agreement for Sewer Lining Services with Hoerr Construction, Inc. of Goodfield, IL
Exhibit A - Second Renewal Contract for Sewer Lining Services_FY27
Supplemental Information - Sanitary Sewer Lining Map FY26-27

Resolution 2026 - _____

BE IT RESOLVED by the President and Board of Trustees of the Village of Northbrook, County of Cook and State of Illinois, THAT:

A Resolution Authorizing the Second Renewal of an Agreement for Sewer Lining Services with Hoerr Construction, Inc. of Goodfield, IL

is hereby adopted, as follows:

Section 1. Recitals

As part of its ongoing responsibilities, the Public Works Department maintains 134 miles of sanitary sewer main and 125 miles of stormwater main. Public Works crews routinely clean and televise sanitary sewer mains, inspect and assess the condition of individual sewer segments, identify maintenance needs, and oversee lining activities to help ensure the sanitary and stormwater systems function as designed. The process of sewer lining involves installing a thin polyester liner into an individual segment of main and allowing it to cure in place. After curing, the liner reinforces the structural integrity of the main, seals it from groundwater infiltration, and repairs any holes or cracks in the pipe. Unlike sewer main replacement work, this work does not require excavation and only causes a minimal amount of interruption to service. While the process is minimally disruptive, due to the specialized equipment and training required to install cured-in-place pipe liners, the Village utilizes contractual services with qualified firms to perform this work. The sewer lining program is an important part of the Village's responsibilities for managing inflow and infiltration under the Metropolitan Water Reclamation District of Greater Chicago's (MWRD's) Watershed Management Ordinance.

In February 2024, Village staff prepared and issued a bid for sewer lining services ("***Services***") and received five (5) responses. Staff determined that Hoerr Construction, Inc. of Goodfield, Illinois ("***Contractor***") submitted the lowest, most responsive bid and was awarded the contract for the Services ("***Agreement***") with Resolution 2024-82.

The Agreement included an initial term, effective May 14, 2024 through April 30, 2025, with the option for up to three (3) one-year renewals upon mutual consent. Both staff and the Contractor wish to renew the Agreement at the adjusted unit pricing ("***Renewal***") outlined in ***Exhibit A***. This is the second Renewal for the Services, effective July 14, 2026, through April 30, 2027. The second Renewal is included as ***Exhibit A*** to this Resolution.

The adopted Fiscal Year 2026-2027 Budget provides sufficient funds in Sanitary Sewer Fund Account No. 14-4160-723-00 for the Services. Staff is requesting authorization of up to the budgeted amount, for a total spending authority of $245,000. Funds will be drawn from this account as needed at the rates outlined in ***Exhibit A***.

Based on these factors, staff recommends that the Village Board authorize the Renewal in accordance with the rates set forth in ***Exhibit A***.

The President and the Board of Trustees have considered the Renewal and determined that it is in the best interests of the Village and the public to approve the Renewal.

Section 2. Approval of Renewal

The Renewal with the Contractor to provide the Services during Fiscal Year 2026-27 at the

unit prices outlined in ***Exhibit A*** is hereby approved.

Section 3. Authorization to Execute Renewal

The Village Manager is hereby authorized and directed to execute such documents and make such payments as are necessary to complete the procurement of the Services from the Contractor in accordance with the terms of the Renewal for Fiscal Year 2026-27.

Approved:

RESULT:
MOVER:
SECONDER:
AYES:
NAYES:
ABSTAIN:
ABSENT:
AWAY:

_____
Village President

ATTEST:

_____
Village Clerk

VILLAGE OF NORTHBROOK
SEWER LINING

SECOND RENEWAL OF CONTRACT

THIS SECOND RENEWAL ("***Renewal***") is made and entered into by the **VILLAGE OF NORTHBROOK** ("***Village***"), an Illinois home rule municipality and the party named below as of the date of the last signature affixed hereto.

CONTACTOR/VENDOR: **Hoerr Construction, Inc.**
1416 County Road 200 N, PO Box 65, Goodfield, IL 61742
ATTN: Mike Kaisner
mkaisner@hoerr.com ("***Contractor***")

In consideration of the recitals and mutual covenants and agreements set forth in this Renewal, the receipt and sufficiency of which are hereby acknowledged and agreed, the parties agree as follows:

Section 1. Recitals.

A. The Village and Contractor entered into that certain contractual agreement titled Sewer Lining Services dated as of May 14, 2024 (***"Contract"***), under which the Contractor agreed to provide installation of sanitary sewer lining services of cured-in-place pipe lining (CIPP), rehabilitation and restoration of the structural integrity of the existing sanitary pipes, as more fully described in the Contract and the attachments thereto (collectively, ***"Services"***).

B. The Contract provided for an initial one-year term (***"Initial Term"***), which Initial Term expired on April 30, 2025.

C. The Contract provides that that the term of the Contract may be renewed and extended for up to three (3) annual terms upon mutual agreement of the Parties.

D. The Village has been satisfied with the Contractor's performance of the Services and the Contractor has agreed to continue to provide the Services as set forth in this Renewal.

Section 2. Definitions and Interpretation.

All capitalized words and phrases used throughout this Renewal have the means set forth in the various provisions of this Renewal. If a word or phrase is not specifically defined in this Renewal, it shall have the same meaning as in the Contract.

Section 3. Renewal of the Contract.

The Village and the Contractor hereby amend the Contract to renew and extend the Contract for a renewal term to commence on July 14, 2026 and end on April 30, 2027 ("***Renewal Term***). During the Renewal Term, the Village will pay the Contractor for the Services in accordance with the Renewal Fee Schedule attached to, and by this reference made a part of, this Renewal as ***Exhibit A.***

Section 4. Legal Effect of Renewal.

All terms, conditions and provisions of the Contract that are not specifically amended, modified, or supplemented by this Renewal shall remain unchanged and in full force and effect as if fully set forth herein. In the event of a conflict between the Contract and the provisions of this Renewal, the text of this Renewal shall control.

IN WITNESS WHEREOF, the Parties have caused this Second Amendment to be executed by their duly authorized representatives.

ATTEST:

By:_____
Derek Gau, Village Clerk

Date:_____

WITNESS:

By:_____

Date: 6/22/26

VILLAGE OF NORTHBROOK

By:_____
Cara Pavlicek, Village Manager

Date_____

Hoerr Construction, Inc.

By:_____

Date: 6/22/26

EXHIBIT A

RENEWAL FEE SCHEDULE

Item	Unit of Measurement	Units Estimated	Unit Pricing	Total
8" Cured in Place Pipe	Linear Foot	4,795	$ 36.50	$ 175,017.50
10" Cured in Place Pipe	Linear Foot	0	$ 37.70	$ -
12" Cured in Place Pipe	Linear Foot	1,141	$ 46.00	$ 52,486.00
15" Cured in Place Pipe	Linear Foot	0		$ -
18" Cured in Place Pipe	Linear Foot	0		$ -
20" x 30" Brick	Linear Foot	0		$ -
24" Cured in Place Pipe	Linear Foot	0		$ -
27" Cured in Place Pipe	Linear Foot	0		$ -
30" Cured in Place Pipe	Linear Foot	0		$ -
33" Cured in Place Pipe	Linear Foot	0		$ -
36" Cured in Place Pipe	Linear Foot	0		$ -
8" Easement	Linear Foot	0		$ -
Heavy Cleaning	Linear Foot	0		$ -
Reinstatement of Service Sanitary Sewer	Each	109	$ 100.00	$ 10,900.00
Protruding Tap Removal	Each	0		$ -
8" End Seals	Each	0		$ -
10" End Seals	Each	0		$ -
12" End Seals	Each	0		$ -
15" End Seals	Each	0		$ -
18" End Seals	Each	0		$ -
20" x 30" End Seals	Each	0		$ -
			TOTAL COST	**$ 238,403.50**

As indicated in Attachment A – Part 1. General Provisions (GP-3), should the Village execute any renewals as outlined in Section 2(a), all work for said renewals shall be completed within 180 calendar days of the execution of said renewals by the Village, with all reports due within 195 calendar days.

In the event the Contractor fails to complete the Work within 180 calendar days or fails to provide all reports within 195 days of the execution of the second renewal of the contract, the Village shall have the right to assess liquidated damages in the amount of Five Hundred Dollars ($500) per calendar day for each day the Work remains incomplete beyond the specified completion date.

northbrook

Sanitary Lining

To Be Lined 2026

The GIS material is made available as a public service. Maps and data are to be used for reference purposes only and Northbrook, Illinois, is not responsible for any inaccuracies herein contained. No Responsibility is assumed for damages or other liabilities due to the accuracy, availability, use or misuse of the information herein provided. Any errors should be reported to the Information Technology Department.

N W E S

0 1,000 2,000 3,000 4,000

Feet

3/31/2026

GIS Consortium

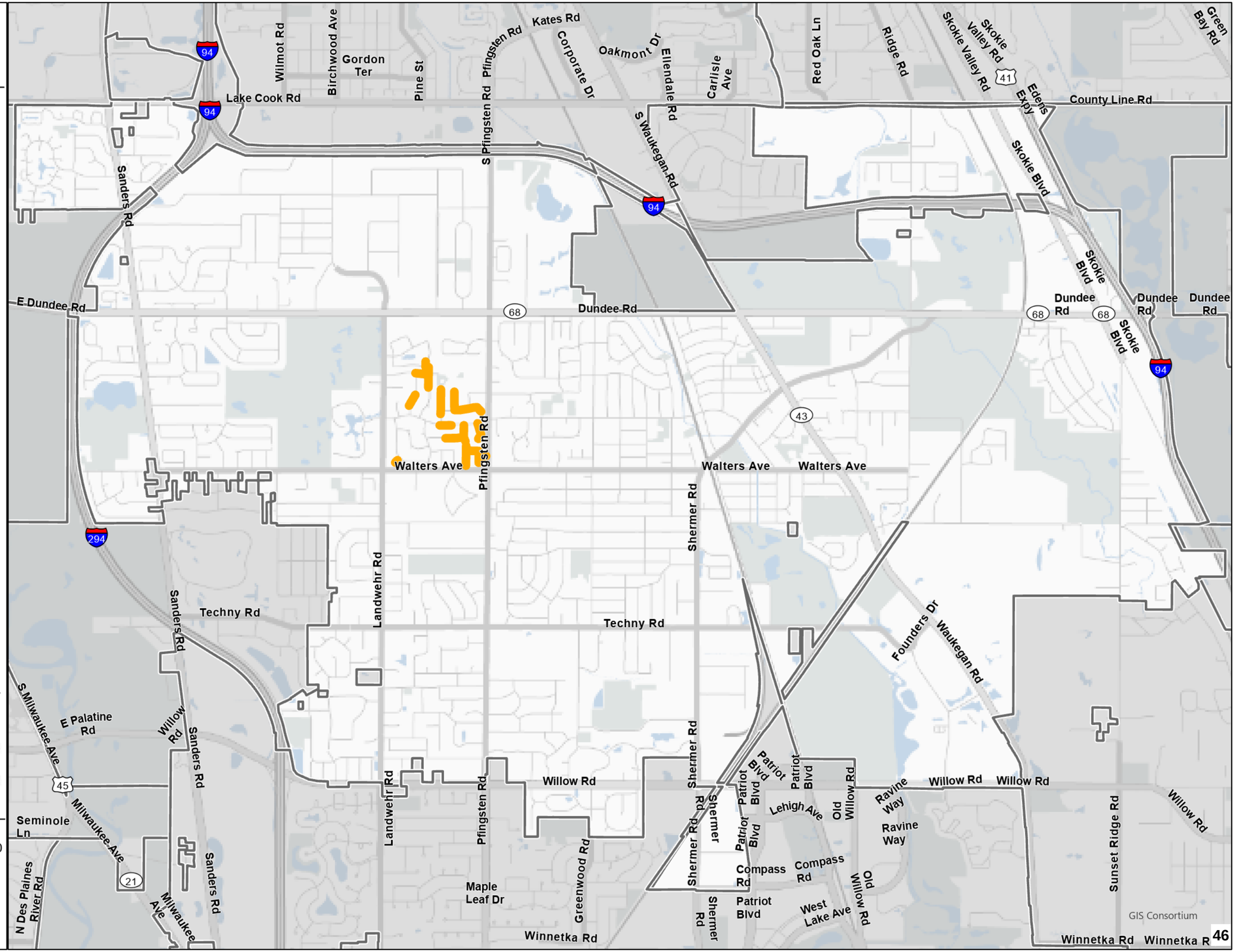

MEMORANDUM

To: Village Manager Cara Pavlicek
From: Director of Public Works Kelly Hamill
Date: 2026-07-14
Subject: A Resolution Authorizing the Second Renewal of an Agreement for Manhole Rehabilitation Services with BLD Services, LLC of Winchester, Indiana f/k/a Culy Contracting, LLC of Winchester, Indiana

Overview
The Village uses contractual services to repair manholes when necessary in order to extend the structural integrity and useful life of the structures ensuring that sanitary sewers function as designed.

Fiscal Impact
The adopted FY27 Budget provides sufficient funds in Sanitary Sewer Fund Account No. 14-4160-723-00 (Sewer Line Construction) for manhole rehabilitation services. Staff is requesting authorization of up to the budgeted amount, for a total spending authority of $65,000. Funds will be drawn from this account as needed at the rates outlined in Exhibit A.

Account	Account No.	Budget	Available	Requested	Remaining	Within Budget
Sanitary Sewer Fund - Sewer Line Construction	14-4160-723-00	$533,450	$526,351	$65,000	$461,351	Yes

Recommendation
Approval.

Strategic Priority
Infrastructure. Maintain a consistent high-quality of life through capital investment, continued focus on sustainability, and facilities that meet operational needs.

Background
As part of its ongoing responsibilities, the Public Works Department maintains 134 miles of sanitary sewer main and 3,411 manholes. Public Works crews routinely clean and televise sanitary sewer mains, inspect and assess the condition of manholes, identify maintenance needs, and oversee rehabilitation activities to help ensure the sanitary sewer system functions as designed. Depending on the deficiency, manholes may require repairs, such as installing new riser rings, or more extensive rehabilitation, such as applying epoxy lining to the interior

walls. Accordingly, because these rehabilitation methods require specialized equipment and training, the Village utilizes contractual services to perform this work to improve the structural integrity of manholes, reduce stormwater and groundwater infiltration, repair defects, and extend the useful life of the structures. The manhole rehabilitation program is an important part of the Village's responsibilities for managing inflow and infiltration under the Metropolitan Water Reclamation District of Greater Chicago's (MWRD's) Watershed Management Ordinance.

In February 2024, staff prepared and issued a bid for manhole rehabilitation services ("Services"). The Village received four (4) responses and staff determined that BLD Services, LLC of Winchester, Indiana ("Contractor") formally known as Culy Contracting, LLC of Winchester, Indiana, submitted the lowest, most responsive bid and was awarded the contract for the Services ("Agreement") with Resolution 2024-83 on May 14, 2024.

The Agreement included an initial term, effective May 1, 2024 through April 30, 2025, with the option for up to two (2) one-year renewals upon mutual consent. The Contractor performed well during the initial term and first Renewal of the Agreement, and both staff and the Contractor wish to renew the Agreement at the same unit pricing established under the first Renewal ("Renewal"). The term of the second Renewal will be from July 14, 2026, to April 30, 2027. The second Renewal is included as Exhibit A. Staff will be in attendance at the Village Board meeting for any questions that may arise.

A Resolution Authorizing the Second Renewal of an Agreement for Manhole Rehabilitation Services with BLD Services, LLC of Winchester, Indiana f/k/a Culy Contracting, LLC of Winchester, Indiana
Exhibit A - Second Renewal for Manhole Rehabilitation Services_FY27

Resolution 2026 - _____

BE IT RESOLVED by the President and Board of Trustees of the Village of Northbrook, County of Cook and State of Illinois, THAT:

A Resolution Authorizing the Second Renewal of an Agreement for Manhole Rehabilitation Services with BLD Services, LLC of Winchester, Indiana f/k/a Culy Contracting, LLC of Winchester, Indiana

is hereby adopted, as follows:

Section 1. Recitals

As part of its ongoing responsibilities, the Public Works Department maintains 134 miles of sanitary sewer main and 125 miles of storm sewers. To ensure the Village's sanitary sewers function as designed, Public Works crews periodically clean, televise, and assess the condition of each individual manhole, and schedule repairs as necessary. Public Works crews rehabilitate manholes ("***Services***") to improve the structural integrity of the manhole, seal manholes from stormwater and groundwater infiltration, and repair defects as necessary to extend the useful life of the structures. The manhole rehabilitation program is an important part of the Village's responsibilities for managing inflow and infiltration under the Metropolitan Water Reclamation District of Greater Chicago's (MWRD's) Watershed Management Ordinance.

In February 2024, Village staff prepared and issued a bid for the Services and received four responses. Staff determined that BLD Services, LLC of Winchester, Indiana ("***Contractor***") formally known as Culy Contracting, LLC of Winchester, Indiana, submitted the lowest, most responsive bid and was awarded the contract for the Services ("***Agreement***") with Resolution 2024-83 on May 14, 2024.

The initial term for this Agreement was effective May 1, 2024 through April 30, 2025, and includes the option for up to two one-year renewals upon mutual consent. The Contractor performed well during the initial term and first renewal agreement, and both staff and the Contractor wish to renew the Agreement for an additional one year term at the same unit pricing established under the first renewal ("***Renewal***"). This is the second Renewal for the Services that will be from July 14, 2026, through April 30, 2027. The Renewal is included as ***Exhibit A*** to this Resolution.

The adopted Fiscal Year 2026-2027 Budget provides sufficient funds in Sanitary Sewer Fund Account No. 14-4160-723-00 for the Services. Staff is requesting authorization of up to the budgeted amount, for a total spending authority of $65,000. Funds will be drawn from this account as needed at the rates outlined in ***Exhibit A***.

Based on these factors, staff recommends that the Village Board authorize the Renewal in accordance with the rates set forth in ***Exhibit A***.

The President and the Board of Trustees have considered the Renewal and determined that it is in the best interests of the Village and the public to approve the Renewal.

Section 2. Approval of Renewal

The Renewal with the Contractor to provide the Services during Fiscal Year 2026-27 at the costs outlined in ***Exhibit A*** is hereby approved.

Section 3. Authorization to Execute Renewal

The Village Manager is hereby authorized and directed to execute such documents and make such payments as are necessary to complete the procurement of the Services from the Contractor in accordance with the terms of the Renewal for Fiscal Year 2026-27.

Approved:

RESULT:
MOVER:
SECONDER:
AYES:
NAYES:
ABSTAIN:
ABSENT:
AWAY:

_____
Village President

ATTEST:

_____
Village Clerk

VILLAGE OF NORTHBROOK
MANHOLE REHABILITATION SERVICES

SECOND RENEWAL OF CONTRACT

THIS SECOND RENEWAL ("***Renewal***") is made and entered into by the **VILLAGE OF NORTHBROOK** ("***Village***"), an Illinois home rule municipality and the party named below as of the date of the last signature affixed hereto.

CONTACTOR: **BLD Services, LLC. f/k/a Culy Contracting, LLC.**
5 Industrial Park Dr., Winchester, Indiana 47394
ATTN: Jake Hart
jhart@bldllc.net ("***Contractor***")

In consideration of the recitals and mutual covenants and agreements set forth in this Renewal, the receipt and sufficiency of which are hereby acknowledged and agreed, the parties agree as follows:

Section 1. Recitals.

A. The Village and Contractor entered into that certain contractual agreement titled Manhole Rehabilitation Services dated as of May 14, 2024 (***"Contract"***), under which the Contractor agreed to improve the structural integrity of Village manholes, seal manholes from stormwater and groundwater infiltration, and repair defects as necessary, as more fully described in the Contract and the attachments thereto (collectively, ***"Services"***).

B. The Contract provided for an initial one-year term (***"Initial Term"***), which Initial Term expired on April 30, 2025.

C. The Contract provides that that the term of the Contract may be renewed and extended for up to two (2) annual terms upon mutual agreement of the Parties.

D. The Village has been satisfied with the Contractor's performance of the Services and the Contractor has agreed to continue to provide the Services as set forth in this Renewal.

Section 2. Definitions and Interpretation.

All capitalized words and phrases used throughout this Renewal have the means set forth in the various provisions of this Renewal. If a word or phrase is not specifically defined in this Renewal, it shall have the same meaning as in the Contract.

Section 3. Renewal of the Contract.

The Village and the Contractor hereby amend the Contract to renew and extend the Contract for a renewal term to commence on July 14, 2026 and end on April 30, 2027 ("***Renewal Term***). During the Renewal Term, the Village will pay the Contractor for the Services in accordance with the Renewal Fee Schedule attached to, and by this reference made a part of, this Renewal as ***Exhibit A.***

Section 4. Legal Effect of Renewal.

All terms, conditions and provisions of the Contract that are not specifically amended, modified, or supplemented by this Renewal shall remain unchanged and in full force and effect as if fully set forth herein. In the event of a conflict between the Contract and the provisions of this Renewal, the text of this Renewal shall control.

IN WITNESS WHEREOF, the Parties have caused this Second Amendment to be executed by their duly authorized representatives.

ATTEST:

By:_____
Derek Gau, Village Clerk

Date:_____

VILLAGE OF NORTHBROOK

By:_____
Cara Pavlicek, Village Manager

Date_____

WITNESS:

By:_____
Beth Piediscalzo

Date:_____6/4/26_____

BLD Services, LLC.

By:_____
Jacob Trapani / Vice-President

Date:_____6/4/26_____

EXHIBIT A
RENEWAL FEE SCHEDULE

Table 1

Contract Year	Dates	Yearly Maximum Contract Price (not to exceed)
Year 1	May 1, 2024 - April 30, 2025	$61,910.00
Year 2	June 24, 2025 - April 30, 2026	$63,150.00
Year 3	July 14, 2026 - April 30, 2027	$64,415.00

As indicated in Attachment A – Part 1. General Provisions (GP-3), should the Village execute any renewals as outlined in Section 2(a), all work for said renewals shall be completed within 180 calendar days of the execution of said renewals by the Village, with all reports due within 195 calendar days.

In the event the Contractor fails to complete the Work within 180 calendar days or fails to provide all reports within 195 days of the execution of the second renewal of the contract, the Village shall have the right to assess liquidated damages in the amount of Five Hundred Dollars ($500) per calendar day for each day the Work remains incomplete beyond the specified completion date.

Table 2

Unit Item	Unit of Measurement	Units (Estimated)	Unit Pricing	Total
Manhole Wall Cementitious Coating (Cementitious Lining Only)	Vertical Foot	301.3	$ 145.00	$ 43,688.50
Manhole Wall Cementitious Coating (Done in Combination with Epoxy Lining)	Vertical Foot	0	$ 100.00	$ 0.00
Full Depth Epoxy Lining (Used in Combination with Cementitious Coating)	Linear Foot	12	$ 150.00	$ 1,800.00
Manhole Exterior Wall Grouting	Each	0	$ 10.00	$ 0.00
Grout/Seal Abandoned Service	Each	0	$ 175.00	$ 0.00
Reconstruct Manhole Bench/Trough Invert	Each	20	$ 400.00	$ 8,000.00
Internal Frame/Chimney Seal (Epoxy)	Each	29	$ 350.00	$ 10,150.00
International Frame/Chimney Seal (Mechanical)	Each	0	$ 550.00	$ 0.00
Ring Adjustment	Each	0	$ 1,200.00	$ 0.00
Ring Replacement	Each	0	$ 1,500.00	$ 0.00
Lid Replacement	Each	0	$ 725.00	$ 0.00
Pre/Post Construction Video	Each	0	$ 55.00	$ 0.00
			TOTAL COST	$ 63,638.50

MEMORANDUM

To: Village Manager Cara Pavlicek
From: Director of Public Works Kelly Hamill
Date: 2026-07-14
Subject: A Resolution Authorizing an Agreement for the Purchase and Installation of Snow Guards at the Public Works Center by Garland/DBS, Inc. of Cleveland, Ohio

Overview

To help prevent snow and ice from sliding off the roof at the Public Works Center, potentially causing damage to vehicles, equipment, or bodily injury to staff or visitors, the installation of snow guards has been identified as an appropriate building improvement.

Fiscal Impact

The adopted FY27 Budget includes $65,000 for this project and provides sufficient funds in General Fund Account No. 11-4100-703-00 (Building and Permanent Improvements).

The installation of snow guards will be completed by Garland/DBS, Inc. of Cleveland, Ohio, through the governmental joint purchasing group OMNIA Partners, in a total not to exceed amount of $64,983. Use of Garland/DBS, Inc. for the completion of this project offers full compliance with the Village's procurement requirements. Funds will be drawn from this account for this project at the price outlined in Exhibit A.

Fund	Account No.	Budget	Available	Requested	Remaining	Within Budget
General Fund - Building and Permanent Improvements	11-4100-703-00	$1,202,500	$579,113	$64,983	$514,130	Yes

Recommendation

Approval.

Strategic Priority

Infrastructure. Maintain a consistent high-quality of life through capital investment, continued focus on sustainability, and facilities that meet operational needs.

Background
Over the last few winter seasons, the accumulation of snow and ice on the Public Works Center (PWC) roof has underscored the need for additional protective measures to prevent the sudden release of snow and ice sheets, which can slide off the roof and pose a risk of damaging vehicles and equipment as well as the potential injury to staff and visitors.

The project calls for snow guards to be installed on the north and south slopes of the PWC roof ("Services") to prevent snow accumulation on sloped roofs from falling at a high rate of speed and hold the snow in place allowing it to melt gradually. The snow guards help protect gutters by preventing sagging caused by heavy snow loads.

In May 2024, Garland/DBS, Inc. of Cleveland, Ohio ("Contractor") completed the re-roofing project at the PWC. As the installer of the existing roofing system and because they maintain the associated warranty, utilizing the Contractor for the Services will help ensure compatibility with the existing roofing system and compliance with the warranty coverage. Accordingly, in June 2026, staff requested a proposal from the Contractor for the Services.

This snow guard installation project is identified in the Village's Five-Year Capital Improvement Plan (2027–2031). The FY27 Budget includes $65,000 for the project, all of which remains available.

Based on the quality of the Contractor's previous work, past performance and the desire to preserve the existing roof warranty, staff recommends entering into an agreement with the Contractor for the purchase and installation of snow guards at the PWC, in a total amount not to exceed of $64,983. Staff will be present at the Village Board meeting to address any questions that may arise.

A Resolution Approving an Agreement for the Purchase and Installation of Snow Guards at the Public Works Center by Garland/DBS, Inc. of Cleveland, Ohio
Exhibit A - Agreement for Snow Guards at the Public Works Center

Resolution 2026-_____

BE IT RESOLVED by the President and Board of Trustees of the Village of Northbrook, County of Cook and State of Illinois, THAT:

A Resolution Approving an Agreement for the Purchase and Installation of Snow Guards at the Public Works Center by Garland/DBS, Inc. of Cleveland, Ohio

is hereby adopted, as follows:

Section 1. Recitals.

To help prevent snow and ice from sliding off the roof at the Public Works Center (PWC), potentially causing damage to vehicles, equipment, or bodily injury to staff or visitors, the installation of snow guards on the north and south slopes at the PWC has been identified as an appropriate building improvement ("***Services***"). This installation work is identified in the Village's Five-Year Capital Improvement Plan (2027 - 2031).

In May 2024, Garland/DBS, Inc. of Cleveland, Ohio ("***Contractor***") completed the re-roofing project at the PWC. As the installer of the existing roofing system and because they maintain the associated warranty, utilizing the Contractor for the Services will help ensure compatibility with the existing roofing system and compliance with the warranty coverage. Accordingly, in June 2026, staff requested a proposal from the Contractor for the Services. The Contractor is part of the governmental joint purchasing group OMNIA Partners, and the use of OMNIA Partners satisfies the Village's purchasing requirements.

Based on the quality of the Contractor's previous work, past performance and the desire to preserve the existing roof warranty, staff recommends entering into an agreement with the Contractor for the purchase and installation of snow guards at the PWC in a total amount not to exceed of $64,983 ("***Agreement***").

The adopted FY 2027 Budget includes $65,000 for this project and provides sufficient funds in General Fund Account No. 11-4100-703-00 (Building and Permanent Improvements).

Based on these factors, staff recommends entering into an Agreement with the Contractor for the purchase and installation of snow guards at the Public Works Center.

The President and the Board of Trustees have considered the Agreement and determined that it is in the best interests of the Village and the public to enter into the Agreement.

Section 2. Approval of Agreement.

The Agreement with the Contractor is approved in a form acceptable to the Village Attorney and the Village Manager.

Section 3. Authorization to Execute Agreement.

The Village Manager and Village Clerk shall be, and are hereby, authorized and directed to execute and seal, on behalf of the Village, the Agreement only after receipt by the Village Clerk of at

least three original copies of the Agreement executed by the Contractor; provided, however, that if such executed copies of the Agreement are not received by the Village Clerk within 60 days after the date of adoption of this Resolution, then this authority to execute and seal shall, at the option of the President and the Board of Trustees, be null and void.

Section 4. Authorization of Expenditure.

The Village Manager is hereby authorized and directed to execute such documents and make such payments as are necessary to procure the Services from the Contractor at the pricing set forth in ***Exhibit A***.

Approved:

RESULT:
MOVER:
SECONDER:
AYES:
NAYES:
ABSTAIN:
ABSENT:

ATTEST:

_____
Village President

_____
Village Clerk

Garland/DBS, Inc.
3800 East 91st Street
Cleveland, OH 44105
Phone: (800) 762-8225
Fax: (216) 883-2055

ROOFING MATERIAL AND SERVICES PROPOSAL

Village of Northbrook
Public Works
655 Huehl Rd
Northbrook, Illinois 60062

Date Submitted: 6/16/2026
Proposal #: 25-IL-250181
MICPA # PW1925
ILLINOIS General Contractor License #: 104.015673

Purchase orders to be made out to: Garland/DBS, Inc.

Please Note: The following budget/estimate is being provided according to the pricing established under the Master Intergovernmental Cooperative Purchasing Agreement (MICPA) with Racine County, WI and OMNIA Partners, Public Sector (U.S. Communities). Garland/DBS, Inc. administered an informal competitive process for obtaining quotes for the project with the hopes of providing a lower market-adjusted price whenever possible.

Scope of Work:

1. To install two rows of snow fence to the North and South roof slope on the maintenance garage.

Proposal Price Based Upon Market Experience:	**$**	**64,983**

Garland/DBS Price Based Upon Local Market Competition:

1 Waukegan Roofing	**$**	**64,983**

Potential issues that could arise during the construction phase of the project will be addressed via unit pricing for additional work beyond the scope of the specifications. This could range anywhere from wet insulation, to the replacement of deteriorated wood nailers.

Please Note – The construction industry is experiencing unprecedented global pricing and availability pressures for many key building components. Specifically, the roofing industry is currently experiencing long lead times and significant price increases with roofing insulation and roofing fasteners. Therefore, this proposal can only be held for 30 days. DBS greatly values your business, and we are working diligently with our long-term suppliers to minimize price increases and project delays which could effect your project. Thank you for your understanding and cooperation.

Clarifications/Exclusions:

1. Permits are excluded. If permits are required this will be addressed via change order.
2. Plumbing, Mechanical, Electrical work is excluded.
3. Masonry work is included to which it obtains to the scope of work.
4. Interior Temporary protection is excluded.
5. Any work not exclusively described in the above proposal scope of work is excluded.

If you have any questions regarding this proposal, please do not hesitate to call me at my number listed below.

Respectfully Submitted,

Nathan Parker

Nathan Parker
Garland/DBS, Inc.
(216) 430-3606

GARLAND/DBS, INC.

By: _____

Title: Director of Construction

Date: 6/18/26

VILLAGE OF NORTHBROOK

By: _____

Title: _____

Date: _____


60

PP115R Pipe-Style Snow Guard
Submittal Document Set

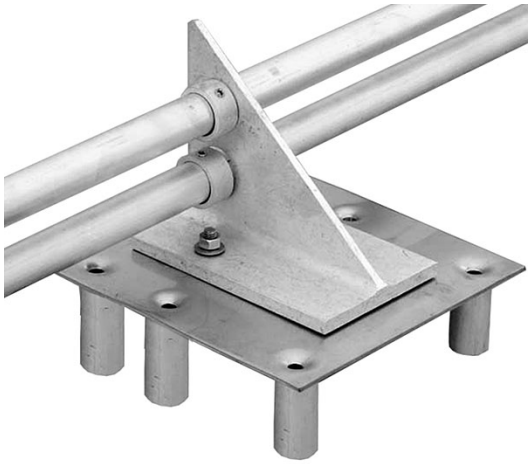

ROOF TYPES
- Existing Membrane (EPDM, TPO, PVC)

AVAILABLE MATERIALS
- Aluminum with Stainless Steel Base Plate

AVAILABLE FINISHES
- Mill Finish
- Powder Coating (additional charge) using RAL TIGER Drylac® Exterior Colors

FEATURES/ADVANTAGES
- Designed to be fastened to wood or metal decking with insulation
- Aluminum Bracket measures 6" L x 4" W x 5 1/8" H
- Stainless Steel Base Plate measures 8" L x 8" W
- 6 Metal Ferrules are designed to fit into insulation
- Base Plate can be flashed with compatible target patch (optional)
- 3 configurations include 2-Pipe, 3-Pipe, 2 Hi-Pipe (Hi-Hole)
- All configurations accept 1" OD Pipe (Tubing)
- All configurations are compatible with the use of Ice Flags
- Internal and External Couplings, End Collars and End Caps are available for this system
- Compression seal creates a watertight barrier

Cut Sheet - BASE SS 8X8-100R (PP115R BASE PLATE)

1. Installation to be completed in accordance with manufacturer's written specifications and installation instructions.
2. See spec sheet or contact manufacturer for detailed material, finishes, and configuration options.
3. Contact manufacturer for detailed layout.
4. Do not scale drawings.
5. Subject to change without notice.

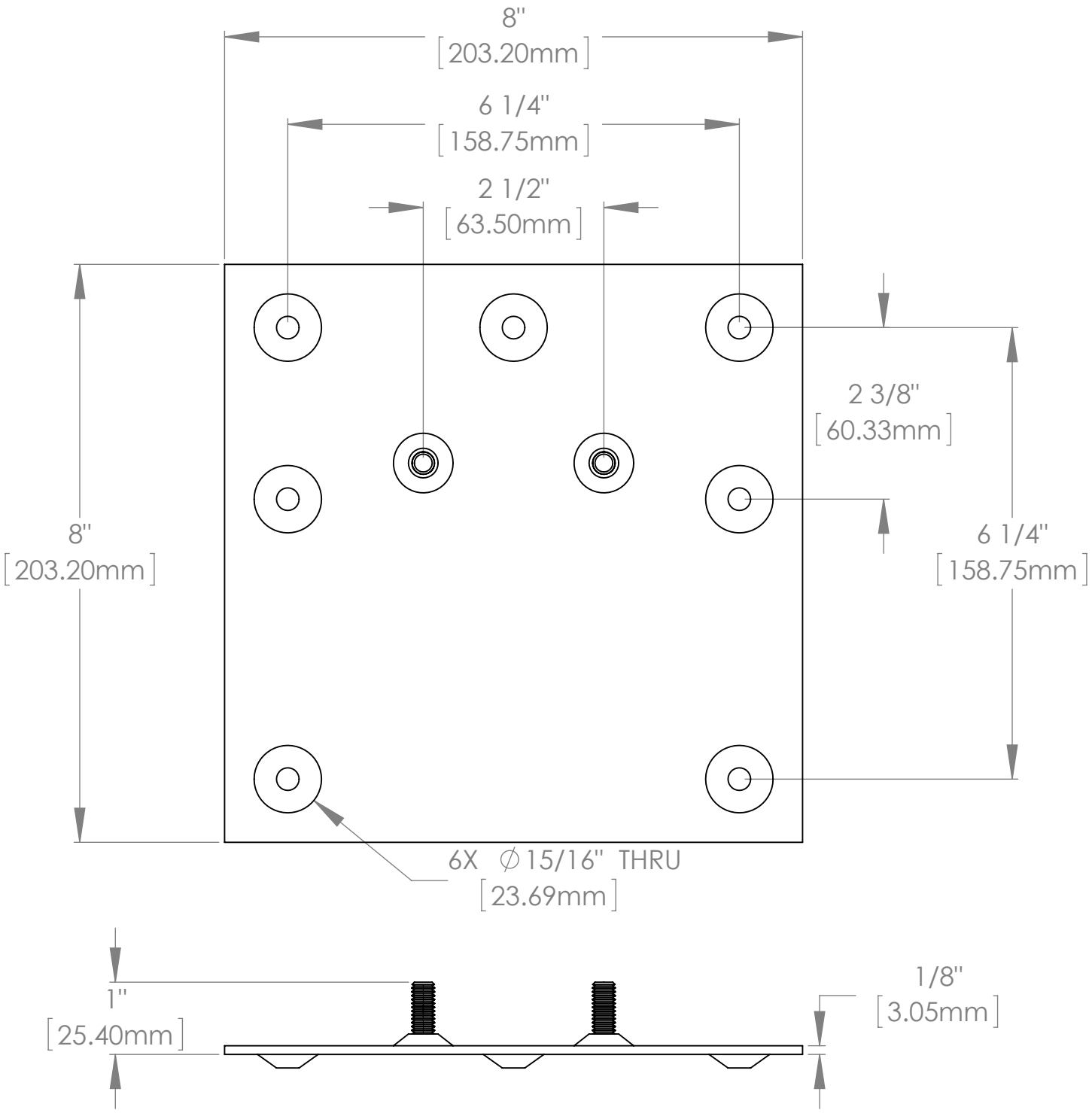

ALPINE SNOWGUARDS®

289 Harrel Street
Morrisville, VT 05661
Phone: 1.888.766.4273
Fax: 1.888.766.9994
Email: Info@alpinesnowguards.com

Scale: 1:2 | 3/2/2018

Cut Sheet - PP115R-H2-ALSS

1. Installation to be completed in accordance with manufacturer's written specifications and installation instructions.
2. See spec sheet or contact manufacturer for detailed material, finishes, and configuration options.
3. Contact manufacturer for detailed layout.
4. Do not scale drawings.
5. Subject to change without notice.

Available Finishes

☐ Mill Finish (Standard)

☐ RAL Tiger Drylac Powder Coating
Color Code:_____

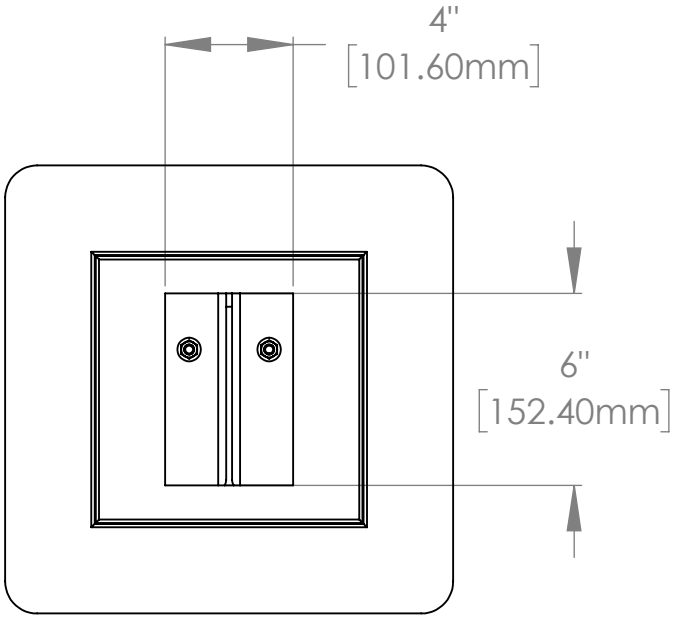

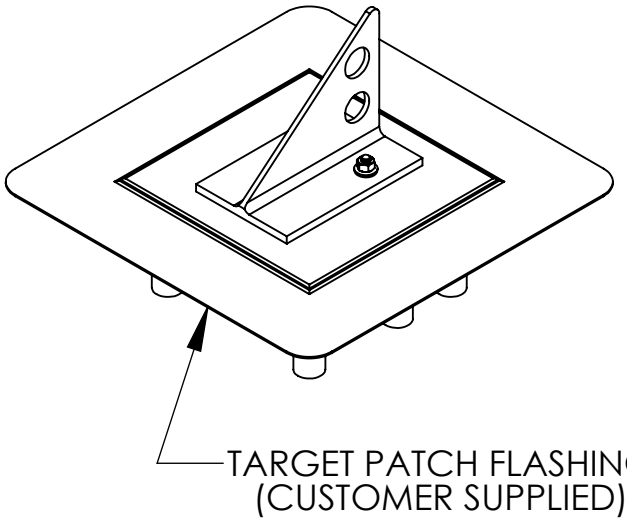

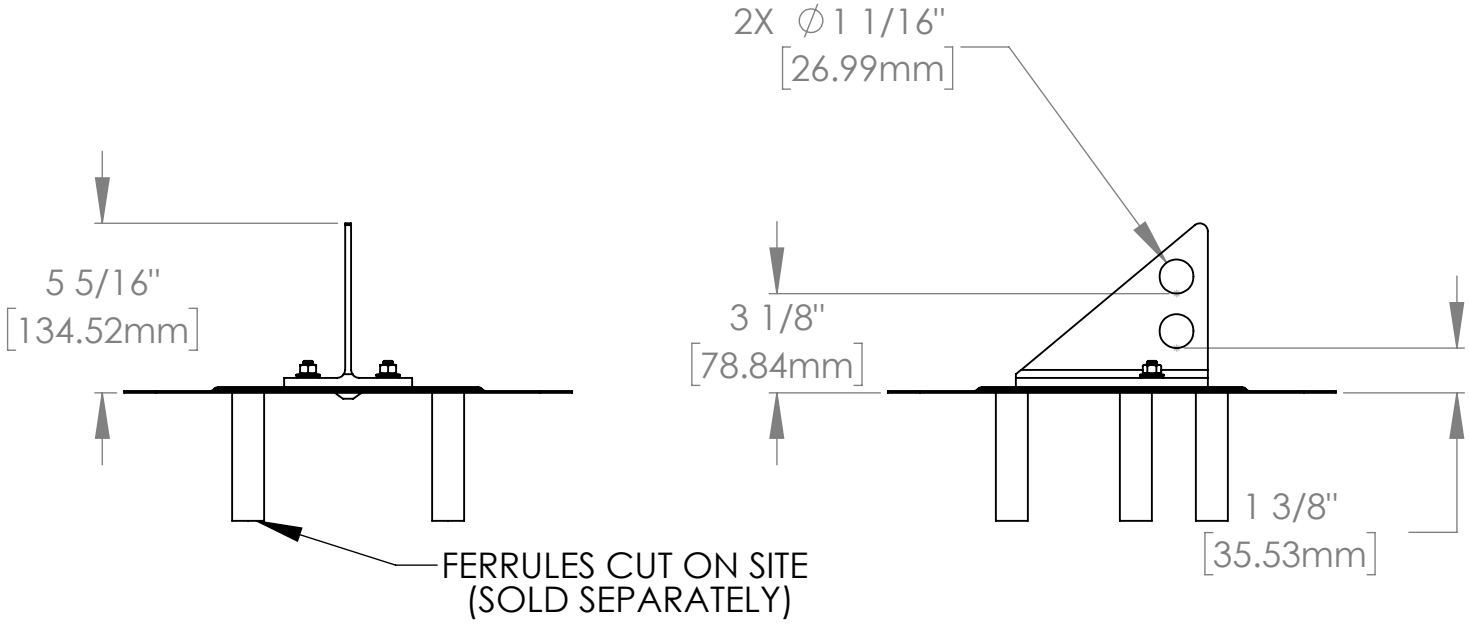

NOTE: CONTACT ALPINE SNOWGUARDS
FOR FERRULES GREATER THAN 6"

ALPINE SNOWGUARDS®

289 Harrel Street
Morrisville, VT 05661
Phone: 1.888.766.4273
Fax: 1.888.766.9994
Email: Info@alpinesnowguards.com

Scale: 1:6 | 4/22/2021

Cut Sheet - PP115R-HI2-ALSS

1. Installation to be completed in accordance with manufacturer's written specifications and installation instructions.
2. See spec sheet or contact manufacturer for detailed material, finishes, and configuration options.
3. Contact manufacturer for detailed layout.
4. Do not scale drawings.
5. Subject to change without notice.

Available Finishes

☐ Mill Finish (Standard)

☐ RAL Tiger Drylac Powder Coating
Color Code:_____

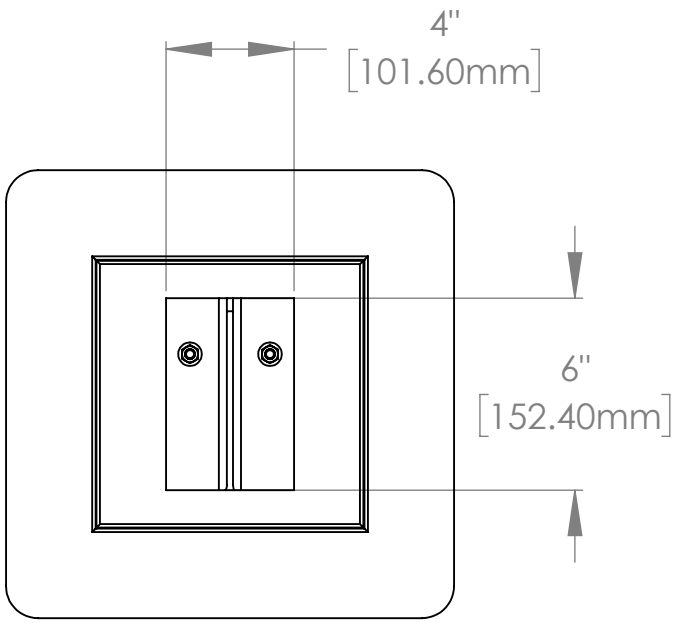

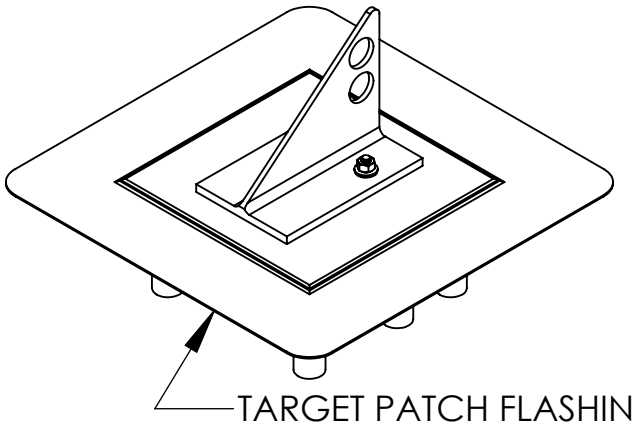

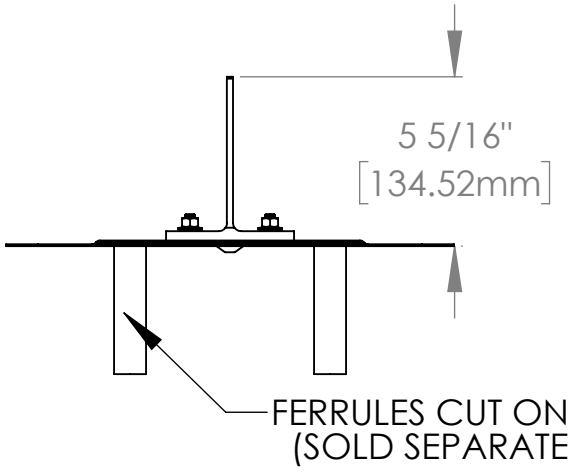

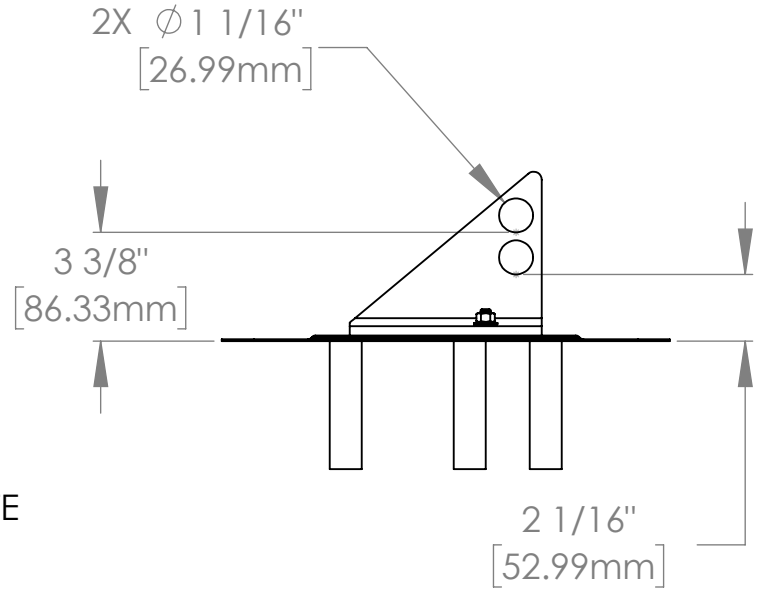

NOTE: CONTACT ALPINE SNOWGUARDS
FOR FERRULE LENGTHS GREATER THAN 6"

ALPINE SNOWGUARDS®

289 Harrel Street
Morrisville, VT 05661
Phone: 1.888.766.4273
Fax: 1.888.766.9994
Email: Info@alpinesnowguards.com

Scale: 1:6 | 4/22/2021

Cut Sheet - BASE SS 8X8-100R (PP115R BASE PLATE)

1. Installation to be completed in accordance with manufacturer's written specifications and installation instructions.
2. See spec sheet or contact manufacturer for detailed material, finishes, and configuration options.
3. Contact manufacturer for detailed layout.
4. Do not scale drawings.
5. Subject to change without notice.

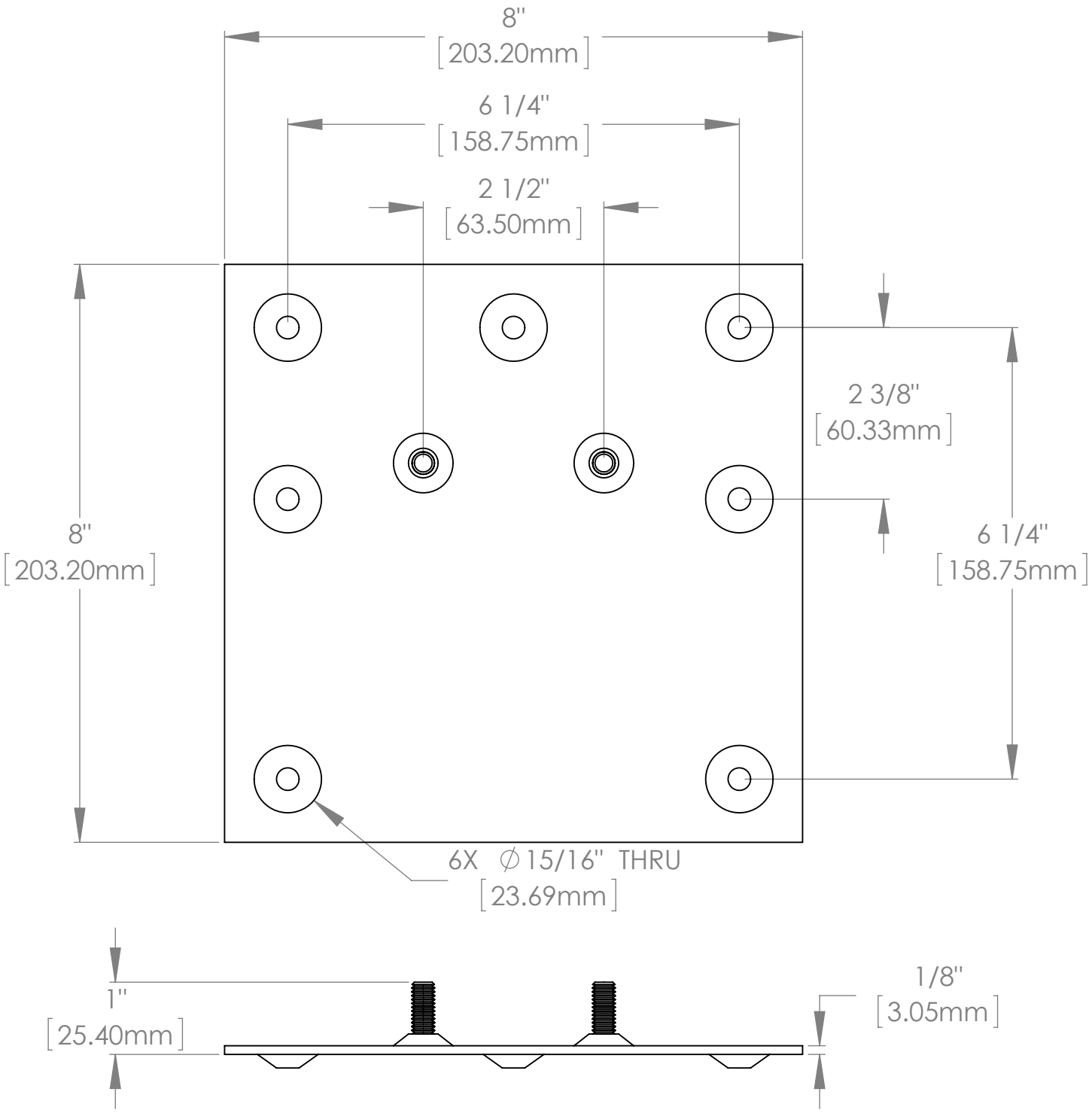

ALPINE SNOWGUARDS®

289 Harrel Street
Morrisville, VT 05661
Phone: 1.888.766.4273
Fax: 1.888.766.9994
Email: Info@alpinesnowguards.com

Scale: 1:2 | 3/2/2018

Cut Sheet - PP115R-H3-ALSS

1. Installation to be completed in accordance with manufacturer's written specifications and installation instructions.
2. See spec sheet or contact manufacturer for detailed material, finishes, and configuration options.
3. Contact manufacturer for detailed layout.
4. Do not scale drawings.
5. Subject to change without notice.

Available Finishes

☐ Mill Finish (Standard)

☐ RAL Tiger Drylac Powder Coating
Color Code: _____

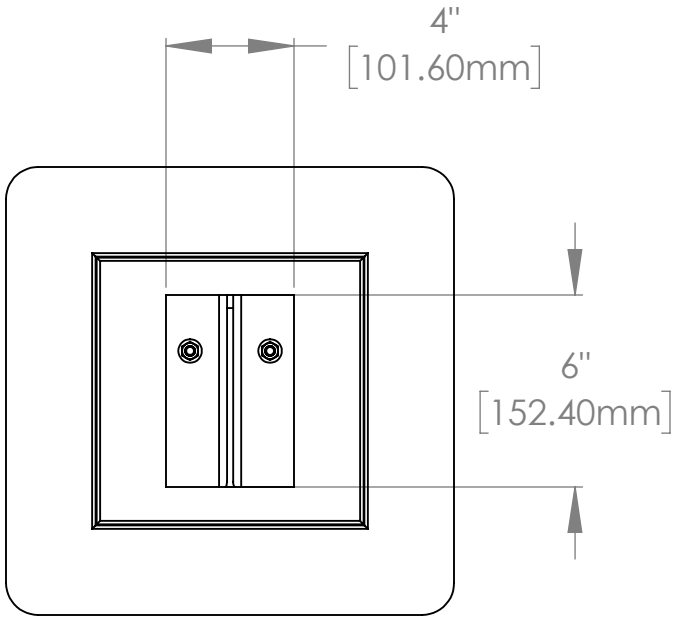

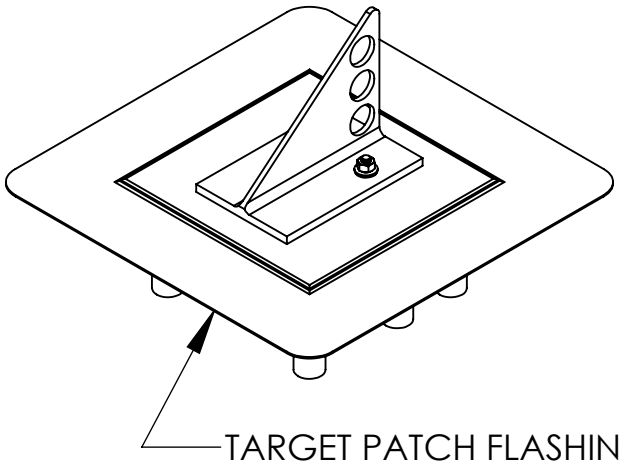

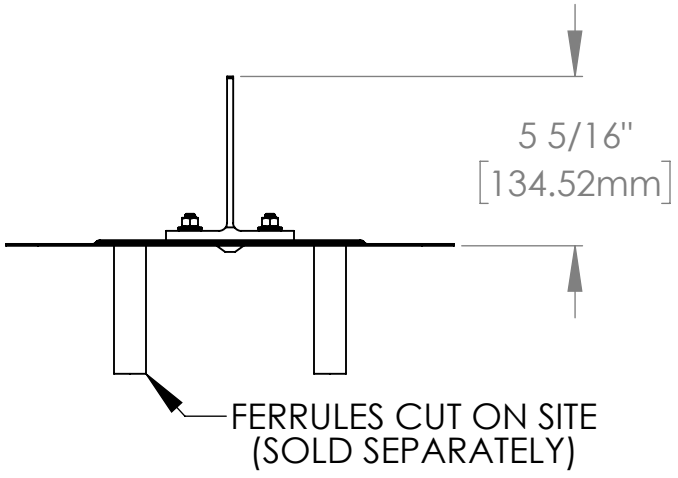

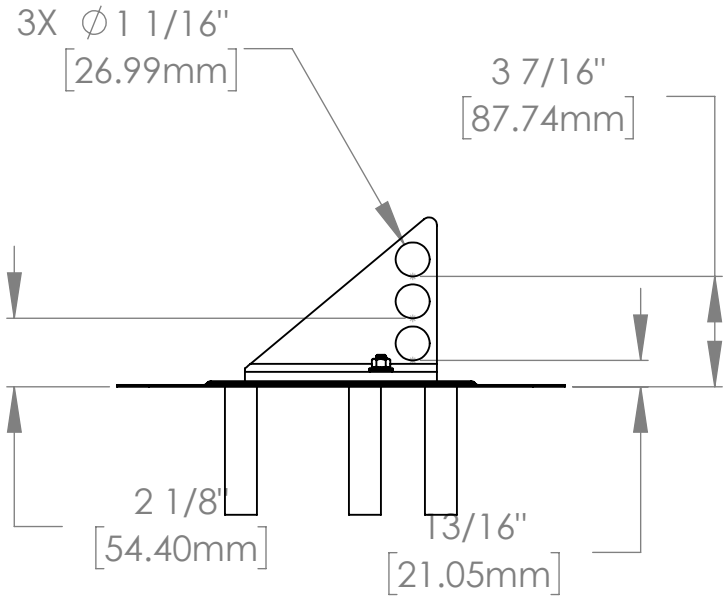

NOTE: CONTACT ALPINE SNOWGUARDS
FOR FERRULE LENGTHS GREATER THAN 6"

ALPINE SNOWGUARDS®

289 Harrel Street
Morrisville, VT 05661
Phone: 1.888.766.4273
Fax: 1.888.766.9994
Email: Info@alpinesnowguards.com

Scale: 1:6 | 4/22/2021

Cut Sheet - Ferrule

1. Installation to be completed in accordance with manufacturer's written specifications and installation instructions.
2. See spec sheet or contact manufacturer for detailed material, finishes, and configuration options.
3. Contact manufacturer for detailed layout.
4. Do not scale drawings.
5. Subject to change without notice.
6. For patent information, visit our Patent Page.

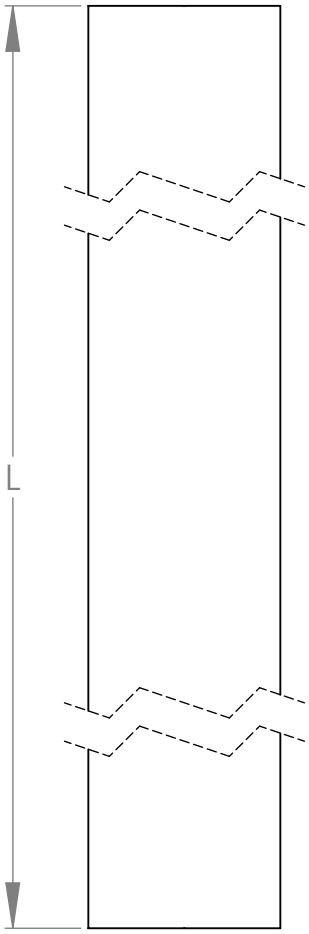

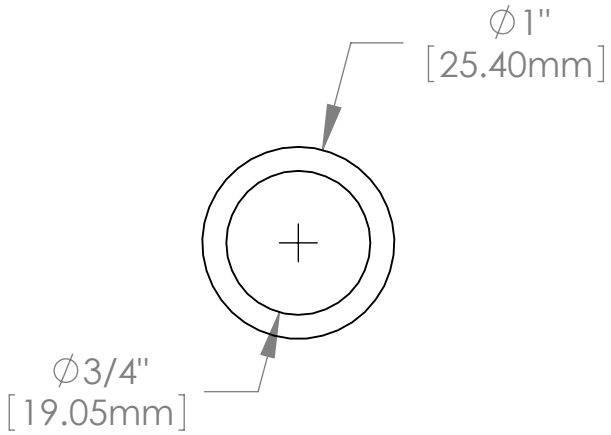

ALPINE SNOWGUARDS®

289 Harrel Street
Morrisville, VT 05661
Phone: 1.888.766.4273
Fax: 1.888.766.9994
Email: Info@alpinesnowguards.com

Scale: 1:1 | 4/21/2021

Assembly Sheet - PP115R (ALL CONFIGURATIONS)

1. Installation to be completed in accordance with manufacturer's written specifications and installation instructions.
2. See spec sheet or contact manufacturer for detailed material, finishes, and configuration options.
3. Contact manufacturer for detailed layout.
4. Do not scale drawings.
5. Subject to change without notice.

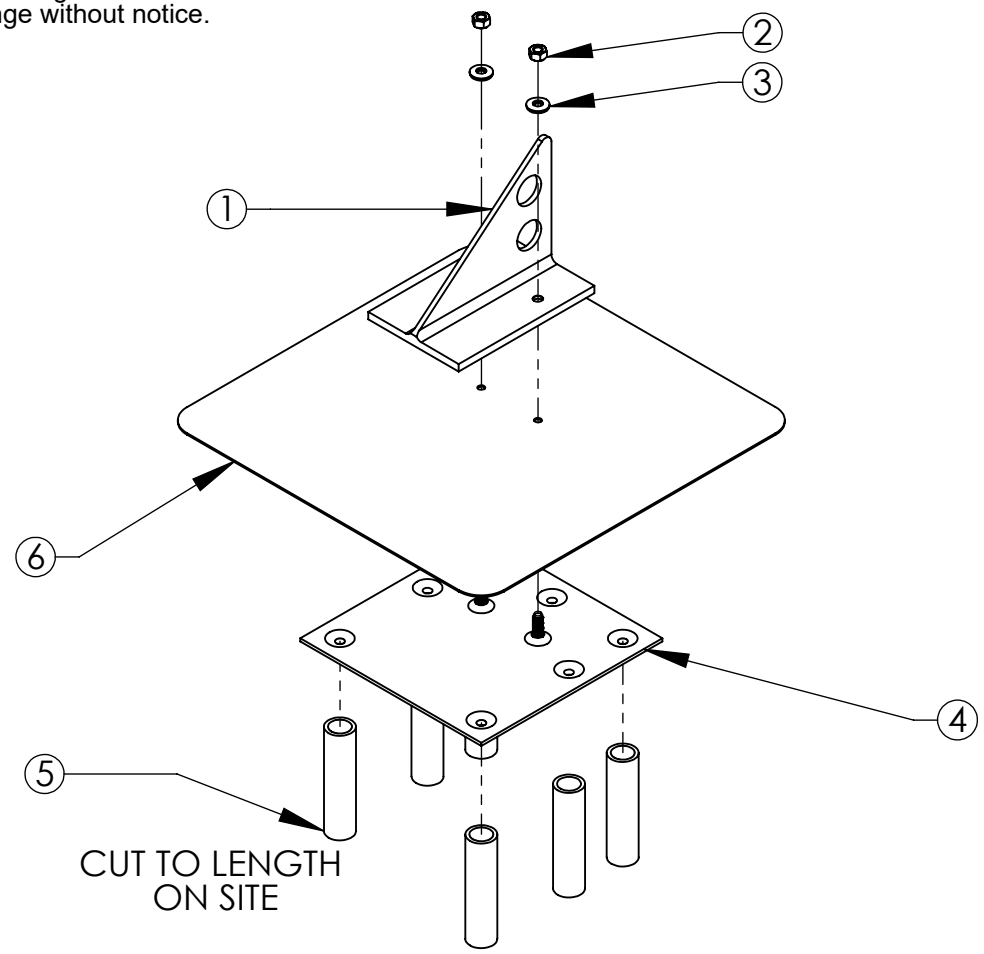

CONTACT ALPINE SNOWGUARDS FOR FERRULE LENGTHS GREATER THAN 6"

ITEM NO.	PART CODE	DESCRIPTION	QTY
1	KIT-145 BRACKET (2-PIPE SHOWN)	KIT-145 BRACKET (2-PIPE, 3-PIPE, OR HI-HOLE OPTIONS)	1
2	N-HX SS-.3125-18	NUT SS HEX FINISHED .3125-18 (INCLUDED IN POLY KIT 145)	2
3	W-NEO SS-.313	SS NEO WASHER .313 ID (INCLUDED IN POLY KIT 145)	2
4	BASE SS 8X8-100R	SS 8X8-100R BASE PLATE	1
5	FERRULE	FERRULE FOR 115R-1" OD-AL (SOLD SEPARATELY)	6
6	TARGET PATCH FLASHING	TARGET PATCH FLASHING (CUSTOMER SUPPLIED)	1

ALPINE SNOWGUARDS®

289 Harrel Street
Morrisville, VT 05661
Phone: 1.888.766.4273
Fax: 1.888.766.9994
Email: Info@alpinesnowguards.com

Scale: 1:6 | 4/22/2021

PP115R Specification Sheet
Snow Guards

PART 1 – GENERAL

1.1 SUMMARY

A. WORK INCLUDES

1. PP115R snow guards that attach directly to roof deck.
2. Coordinate with installation of roof to assure proper placement of snow guards.
3. Provide appropriate snow guards and fasteners for the roof system.

B. RELATED SECTIONS

1. Section 076000: Flashing and Sheet Metal	MasterFormat 2016 07 60 00
2. Section 075000: Membrane Roofing	MasterFormat 2016 07 50 00
3. Section 077253: Snow Guards	MasterFormat 2016 07 72 53

1.2 SYSTEM DESCRIPTION

A. COMPONENTS

1. Bracket: KIT-145 BRACKET - A mill finish aluminum bracket with 2 fastener holes to accept the 5/16" base plate studs and holes in flag to accept pipe (2-pipe, 3-pipe, or 2 hi-hole).
2. N-HX SS-.3125-18
3. W-NEO SS-.313
4. BASE SS 8X8-100R - An 8" x 8" stainless steel base plate with two 5/16"-18x3/4" stainless steel flathead bolts welded into place.
5. FERRULE - An aluminum tube designed to fit into insulation to be fastened to wood or metal decking. Ferrules are sold separately, as needed.
6. TARGET PATCH FLASHING - A customer-supplied target patch flashing of appropriate size, material and method of installation to meet roof manufacturer's requirement for proper flashing.
7. PP56, end caps - a stainless steel cap that is inserted into the end of the run of pipe, creating a barrier against moisture, debris and insects.
8. PP65, end collars - an aluminum collar that is used to keep the pipe in appropriate position within bracket.
9. PP75, pipe – an aluminum pipe that is inserted into holes in bracket. PP95 ice flags are optional.
10. Coupling: PP86 (Internal) or PP84 (external) - an aluminum coupling that is used to couple runs of pipe together.
11. PP95, ice flags (optional) - an aluminum accessory installed on fence-style snow guards that provides additional surface area/snow management properties to help keep snow and ice from sliding underneath the pipe.
12. Fasteners: Fasteners are not included.
    a. To be of metal compatible with snow guards.
    b. Fasteners should be selected for compatibility with roof deck.
    c. Fastener strength should exceed or be equal to that of snow guard system.

B. DESIGN REQUIREMENTS
1. Spacing to be recommended by manufacturer or building engineer.
2. Install a minimum of 6 fasteners per snow guard base plate.
3. It is important to design new structures or assess existing structures to make sure that they can withstand retained snow loads.

1.3 SUBMITTAL
A. Submit manufacturer's specifications, standard detail drawings, installation instructions and recommended layout.

1.4 QUALITY ASSURANCE
A. Installer to be experienced in installation of specified roofing material and snow guards for not less than 5 years in the area of the project.

1.5 DELIVERY / STORAGE / HANDLING
A. Inspect material upon delivery and order replacements for any missing or defective items. Keep material dry, covered and off the ground until installed.

PART 2 – PRODUCTS

2.1 MANUFACTURER
A. Alpine SnowGuards®, a Division of Vermont Slate & Copper Services, Inc.
289 Harrel St., Morrisville, VT 05661 | 888-766-4273 | www.alpinesnowguards.com

2.2 MATERIALS
A. Snow Guard Bracket - 6000 Series Aluminum.
B. Base Plate – 11-gauge 304 stainless steel with two 5/16” 304 stainless steel machine screws welded into countersinks.
C. Pipe (choose one)
1. Aluminum – 6000 Series, 1” outside diameter and .120” wall thickness, extruded.
2. Stainless Steel – 304 alloy, same dimensions as aluminum, welded.
D. Couplings (choose one)
1. Aluminum – 6000 Series
a. Internal and concealed coupling 3” long.
b. External and exposed coupling which can also serve as a 5” long expansion mechanism.
2. Stainless Steel – 304 Series Internal and concealed coupling 3” long.
E. End Caps - 304 Stainless Steel
F. End Collars (choose one)
1. 6000 Series Aluminum
2. 304 Stainless Steel
G. Ferrules – 6000 Series Aluminum 1” O.D, .120” wall thickness x 24” long.
Cut to length on site.

H. Ice Flags (optional - choose one)
1. 6000 Series Aluminum 3” wide x length (as needed).
2. 304 Stainless Steel

I. Fasteners (can be purchased from others) to be compatible with chosen roof application and meet specified pull-out values as shown in load test data.

2.3 FINISH (choose one)

A. Mill Finish – standard

B. Powder Coated – available at additional cost

PART 3 – EXECUTION

3.1 EXAMINATION

A. Substrate

1. Inspect structure on which snow guard system is to be installed and verify it will withstand any additional loading that it may incur. Notify general contractor of any deficiencies before installing Alpine SnowGuards’ products.

2. Verify roofing material has been installed correctly prior to installing snow guards.

3.2 INSTALLATION

A. Comply with architectural drawings and snow guard manufacturer’s recommendations for location of system. Comply with manufacturer's written installation instructions for installation and layout.

Alpine SnowGuards®, a Division of Vermont Slate & Copper Services, Inc.
289 Harrel St., Morrisville, VT 05661 | 888-766-4273 | info@alpinesnowguards.com | www.alpinesnowguards.com

PP115R Snow Guard Installation Instructions

ROOF TYPES

- Existing Membrane (EPDM, TPO, PVC)

Base Plate Installation

Base Plate is flat stainless-steel component with two threaded studs.

1. Place base plate on top of finished membrane roof and mark locations of six fastener holes.

   Note: *Threaded studs on base plate are not centered. Align base plate so studs are on upslope end of base plate.*

2. Remove base plate and at six marked locations, bore one-inch holes through the finished membrane and through insulation until substructure is reached.
3. Measure depth of each hole and cut ferrules to rest on substructure to be flush with finished roof surface when inserted into holes. Drop ferrules into place. Ferrules resting on substructure will prevent insulation from compressing when base plate is tightened into place.

Note: *Contact Alpine SnowGuards for ferrule lengths greater than 6".*

Optional: apply appropriate amount of low expansion spray foam insulation inside six ferrules. This is to prevent condensation on underside of metal decking.

4. Place base plate on top of finished membrane roof so four fastener holes line up with centers of six ferrules. Holes in base plate will lock into ferrules when ferrules are positioned properly.
5. Fasten base plate to substructure using fasteners that are appropriate for decking type and insulation thickness, making certain base plate cannot shift.
6. Consult with an engineer, with Alpine SnowGuards or with a fastener company to determine proper fasteners for attaching base plate to substructure.

Membrane Flashing of Base Plate

1. Use an acceptable piece and size of flashing material to cover base plate in a method accepted by membrane manufacturer. This is commonly referred to as "Flashing Patch" or "Target Patch". The size must be a minimum of 12" x 12", however, each membrane manufacturer has specific requirements that must be met.
2. In the flashing material, cut two holes small enough to fit tightly over 2 threaded studs of base plate.
3. Before installing flashing material, apply a generous amount of an acceptable sealer around 2 threaded studs.
4. Apply flashing material over base plate and seal perimeter of flashing to deck sheet.
5. Threaded studs are now only part of base plate exposed.

PP115R Snow Guard Installation Instructions

Note: *Due to sealer applied around studs, there may be bleed out at this opening. When the bracket is installed and tightened, this bleed out will assist in creating a watertight compression fitting.*

Snow Guard Bracket Installation

1. Place bracket over threaded studs. Bracket will be centered on base plate when installed properly.
2. Place one bonded washer over each stud and press them all the way down against bracket.
3. Thread one nut down each stud and tighten. The nut should be tightened to approximately 15 inch-lbs, until EPDM on bonded washer is compressed. Use fig. 1 as a visual guide for correct torque.
4. Install Pipes, Couplings, End Caps and End Collars (refer to Pipe-Style Installation Instructions). Ice Flags are optional.

fig. 1.



SNOW GUARD LAYOUT FOR PIPE-STYLE BRACKETS

- Contact Alpine SnowGuards for detailed layout information.
- To allow for thermal expansion, do not install runs of snow retention pipe or bar in excess of 100 feet long without a break.
- First row of snow guards are installed above outermost wall or support of the building.

Alpine SnowGuards®, a Division of Vermont Slate & Copper Services, Inc.
289 Harrel St., Morrisville, VT 05661 | 888-766-4273 | info@alpinesnowguards.com | www.alpinesnowguards.com

Snow Guard Maintenance

Our snow guards must be inspected annually. Any defects or damage in materials and/or workmanship must be reported to Alpine SnowGuards immediately. Seller will not be responsible for snow guard systems that have not been properly maintained.

- Ensure snow guard brackets, accessories & components are intact, have not been displaced, and show no signs of damage or wear.
- Inspect fasteners into roof deck.
- Inspect snow guard-related waterproofing and replace or repair where necessary to ensure roof integrity.
- Snow accumulation on roofs and rooftop solar panels must be removed to avoid damage to the roof or panels, the building structure, and anything below. Heavy snowfalls, drifting, and the gradual accumulation of snow and ice can lead to less-than-ideal snow guard performance.
- Check each clamp set screw with a torque wrench to ensure proper fastening has been maintained (clamp-to-seam models).
- Inspect sealant, tape, and adhesive. Remove and replace as needed.

Alpine SnowGuards®, a Division of Vermont Slate & Copper Services, Inc.
289 Harrel St., Morrisville, VT 05661 | 888-766-4273 | info@alpinesnowguards.com | www.alpinesnowguards.com



TIGER Drylac®

ral colors

exterior powder coatings

TIGER Drylac® Powder Coatings

series 49

Weather Resistant TGIC Polyester Powder Coatings for Exterior and Interior Applications

Features: Good weather resistance, good mechanical properties, very smooth flow, good storage stability, good coverage

Gloss Level: All colors featured in this chart are available as standard products in smooth glossy with a gloss level of 80-90+ (gloss level according to Garner 60 deg., ASTM D 523).

Typical Applications: Residential windows and doors, garden equipment, patio furniture, automotive accessories, bicycles, motorcycles, sporting goods.

Standard Packaging: 55 lb boxes or 5 lb mini packs

Datasheets: Periodically updated datasheets, showing cure parameters, test results, pre-treatment information and more are available for all products in this chart. Please contact your local TIGER Drylac office or visit www.tigerdrylac.com for the most current edition.

All Series 49 (custom and stock) products, made in the US or Canada are periodically re-certified and carry the UL (Underwriter Laboratories) Recognized Component mark. This UL mark is for all equipment and products intended for the US and Canadian market.

series 38

Highly Weather- and UV-Resistant Powder Coatings based on Super Durable TGIC Polyester for Exterior and Interior Applications

Features: Superior gloss and color retention, excellent weather resistance, good mechanical properties, superior chalk resistance, smooth flow, excellent edge coverage, good storage stability. AAMA 2604-05 conforming.

Gloss Level: All colors featured in this chart are available as standard products in smooth glossy with a gloss level of 80-90 (gloss level according to Gardner 60 deg., ASTM D 523).

Typical Applications: Agricultural and construction equipment, bus shelters, lighting fixtures, playground equipment, site furnishings, garage doors, stadium seating, fencing, automotive equipment, and marine applications.

Standard Packaging: 44 lb boxes and 5 lb mini packs

Datasheets: Periodically updated datasheets, showing cure parameters, test results, pre-treatment information and more are available for all products in this chart. Please contact your local TIGER Drylac office or visit www.tigerdrylac.com for the most current edition.

RAL colors not available: Due to pigmentation a small percentage of colors in the yellow, orange, red and purple range offer only limited UV stability and are therefore not available.

More standard Series 38 products: For additional architectural mattes, glossy and metallic products please see our Series 38 Super Durable Powder Coatings brochure.

Custom colors: Custom colors not shown in this brochure can be custom made in 7 to 10 days. Due to pigmentation some colors in the yellow, orange, red and purple range offer only limited UV stability. UV stability of custom colors in that color range must be verified by our production laboratories on a case by case basis.

TIGER Drylac continues to offer the largest product selection in the powder coating industry. For additional standard products and innovative powder coating solutions please see our numerous other brochures including:

TIGER Drylac Metallic

TIGER Drylac Special Effect

TIGER Drylac Essentials

TIGER Drylac Specialties

TIGER Drylac Series 38 Super Durable

TIGER Drylac Anti-Graffiti

TIGER Drylac Series 58 Super Durable
(for approved applicators only)

TIGER Drylac Series 75 Fluoropolymer
(for approved applicators only)

TIGER Drylac Wood

Specifying TIGER Drylac products

In order to eliminate possible errors in specifying our products, we recommend using the full product number rather then specifying the RAL number only. This product number not only describes the Series/Chemistry, but also the exact color, finish and sheen.

Please check with your local TIGER Drylac office or representative for assistance with specifications and suitability issues.

RAL

Having gained worldwide acceptance over the last few decades, the RAL is the most popular Central European Color Standard used today.

The RAL colors in this chart have been matched as closely as possible. Color chart production methods and influence from heat and light may account for slight color deviation from the actual RAL Standard. This chart therefore can not serve as a standard for RAL color production and is to be used as a guide for color planning and specification only.

To aid in final product selection please contact your regional Tiger Drylac location for a powder coated Q-Panel of the product of your choice.

Product Code Matrix

3 8 / 3 0 0 2 5

Chemistry

- **09** Polyester/Epoxy Hybrid
- **16** Acrylic Hybrid
- **28** Super Durable Polyester TGIC (for approved applicators only)
- **39** Polyester TGIC
- **44** Polyurethane
- **49** Polyester TGIC
- **59** Polyester TGIC-Free
- **69** Epoxy
- **75** Fluoropolymer (for approved applicators only)
- **89** Polyester/Epoxy Hybrid, Low/Fast Cure

Color Group
(starting with)

- **1** White
- **2** Yellow / Orange
- **3** Red
- **4** Blue
- **5** Green
- **6** Brown
- **7** Grey
- **8** Black
- **9** Metallic



RAL **1000** 49/15200 38/15000	RAL **1015** 49/15320 38/15015	RAL **1033** 49/22240	RAL **2012** 49/24690	RAL **3014** 49/31080	RAL **4004** 49/31020 38/30024
RAL **1001** 49/15190 38/15001	RAL **1016** 49/22520 38/20016	RAL **1034** 49/23910	RAL **3000** 49/33120 38/30000	RAL **3015** 49/33670	RAL **4005** 49/42780
RAL **1002** 49/22590 38/20002	RAL **1017** 49/22510 38/20017	RAL **1037** 49/20096	RAL **3001** 49/31120 38/30001	RAL **3016** 49/31980 38/30016	RAL **4006** 49/32090
RAL **1003** 49/22580	RAL **1018** 49/21830 38/20018	RAL **2000** 49/24570	RAL **3002** 49/31110 38/30002	RAL **3017** 49/31060	RAL **4007** 49/32540 38/30025
RAL **1004** 49/22570 38/20004	RAL **1019** 49/13660 38/15019	RAL **2001** 49/24560 38/23170	RAL **3003** 49/31100 38/30003	RAL **3018** 49/31050	RAL **4008** 49/32280
RAL **1005** 49/22560 38/20005	RAL **1020** 49/22500 38/20020	RAL **2002** 49/24550 38/25002	RAL **3004** 49/33900 38/30004	RAL **3020** 49/31040 38/30021	RAL **4009** 49/34740
RAL **1006** 49/22550 38/20006	RAL **1021** 49/22280 38/20021	RAL **2003** 49/24540	RAL **3005** 49/31900 38/30005	RAL **3022** 49/33700	RAL **4010** 49/40490
RAL **1007** 49/22540	RAL **1023** 49/22490 38/20023	RAL **2004** 49/24530	RAL **3007** 49/31910 38/30007	RAL **3027** 49/33660	RAL **5000** 49/42200 38/40000
RAL **1011** 49/15180 38/15011	RAL **1024** 49/22480 38/20024	RAL **2008** 49/24340	RAL **3009** 49/31920 38/30009	RAL **3031** 49/34730 38/30031	RAL **5001** 49/42210 38/40001
RAL **1012** 49/22530 38/20012	RAL **1027** 49/22470 38/20027	RAL **2009** 49/24360	RAL **3011** 49/31090 38/30011	RAL **4001** 49/43160	RAL **5002** 49/42220 38/40002
RAL **1013** 49/11280 38/10013	RAL **1028** 49/22460	RAL **2010** 49/24520 38/25001	RAL **3012** 49/31940 38/30012	RAL **4002** 49/31030 38/30008	RAL **5003** 49/42230 38/40003
RAL **1014** 49/15170 38/15014	RAL **1032** 49/22450 38/20032	RAL **2011** 49/24580	RAL **3013** 49/31950 38/30013	RAL **4003** 49/32270	RAL **5004** 49/42240 38/40004

RAL **5005** 49/43190 38/40010	RAL **5019** 49/42360 38/40019	RAL **6006** 49/52870 38/50006	RAL **6016** 49/51020 38/50016	RAL **6027** 49/50990 38/50027	RAL **7006** 49/72580 38/70006
RAL **5007** 49/42250 38/40007	RAL **5020** 49/44270 38/40018	RAL **6007** 49/52860 38/50007	RAL **6017** 49/52780 38/50017	RAL **6028** 49/52650 38/50028	RAL **7008** 49/72570 38/70008
RAL **5008** 49/42260 38/40008	RAL **5021** 49/41190 38/40021	RAL **6008** 49/53240 38/50008	RAL **6018** 49/52720 38/50018	RAL **6029** 49/52640 38/50029	RAL **7009** 49/72770 38/70009
RAL **5009** 49/42270 38/40009	RAL **5022** 49/42390 38/40022	RAL **6009** 49/52840 38/50009	RAL **6019** 49/51000 38/50019	RAL **6032** 49/52630 38/50032	RAL **7010** 49/72560 38/70014
RAL **5010** 49/42280 38/40016	RAL **5023** 49/44650 38/40023			RAL **6033** 49/55010 38/50033	RAL **7011** 49/72790 38/70011
RAL **5011** 49/43180 38/40011	RAL **5024** 49/44660 38/40024			RAL **6034** 49/55020 38/50034	RAL **7012** 49/71180 38/70012
RAL **5012** 49/43170 38/40012	RAL **6000** 49/53160 38/50000	RAL **6010** 49/52830 38/50031	RAL **6020** 49/52710 38/50020	RAL **7000** 49/72700 38/70000	RAL **7013** 49/72550 38/70013
RAL **5013** 49/42310 38/40013	RAL **6001** 49/52900 38/50005	RAL **6011** 49/52820 38/50011	RAL **6021** 49/52700 38/50021	RAL **7001** 49/72710 38/70003	RAL **7015** 49/72820 38/70015
RAL **5014** 49/42320 38/40014	RAL **6002** 49/52890 38/50023	RAL **6012** 49/51540 38/50012	RAL **6022** 49/52690 38/50022	RAL **7002** 49/72720 38/70007	RAL **7016** 49/72830 38/70016
RAL **5015** 49/42330 38/40015	RAL **6003** 49/52880 38/50003	RAL **6013** 49/52810 38/50013	RAL **6024** 49/52680 38/50024	RAL **7003** 49/72600 38/70017	RAL **7021** 49/72540 38/70021
RAL **5017** 49/40760 38/40017	RAL **6004** 49/50980 38/50004	RAL **6014** 49/52800 38/50014	RAL **6025** 49/52670 38/50025	RAL **7004** 49/73300 38/70004	RAL **7022** 49/72850 38/70022
RAL **5018** 49/41140 38/40020	RAL **6005** 49/50670 38/50002	RAL **6015** 49/52790 38/50015	RAL **6026** 49/52660 38/50026	RAL **7005** 49/72590 38/70005	RAL **7023** 49/72530 38/70023



exterior

RAL **7024** 49/72870 38/70024	RAL **7040** 49/75470 38/70046	RAL **8007** 49/66120 38/60007	RAL **8025** 49/66050 38/60025
RAL **7026** 49/72880 38/70026	RAL **7042** 49/73250 38/70042	RAL **8008** 49/66110 38/60008	RAL **8028** 49/66500 38/60028
RAL **7030** 49/72890 38/70027	RAL **7043** 49/72460 38/70043	RAL **8011** 49/66100 38/60011	RAL **9001** 49/10016 38/10001
RAL **7031** 49/72520 38/70031	RAL **7044** 49/75480 38/70044	RAL **8012** 49/66090 38/60012	RAL **9002** 49/70520 38/10002
RAL **7032** 49/72910 38/70001	RAL **7045** 49/77890 38/70045	RAL **8014** 49/65230 38/60010	RAL **9003** 49/11400 38/10003
RAL **7033** 49/72510 38/70033	RAL **7046** 49/72010 38/70002	RAL **8015** 49/63040 38/60015	RAL **9004** 49/81950 38/80004
RAL **7034** 49/72500 38/70034	RAL **7047** 49/72020 38/70047	RAL **8016** 49/66080 38/60016	RAL **9005** 49/82830 38/80010
RAL **7035** 49/73510 38/70035	RAL **8000** 49/66170 38/60000	RAL **8017** 49/65220 38/60017	RAL **9010** 49/11500 38/10004
RAL **7036** 49/72950 38/70036	RAL **8001** 49/66160 38/60005	RAL **8019** 49/65490 38/60019	RAL **9011** 49/80540 38/80001
RAL **7037** 49/72480 38/70037	RAL **8002** 49/66150 38/60002	RAL **8022** 49/63080 38/60022	RAL **9016** 49/11340 38/10010
RAL **7038** 49/72470 38/70038	RAL **8003** 49/66140 38/60003	RAL **8023** 49/66070 38/60023	RAL **9017** 49/80550 38/80017
RAL **7039** 49/71020 38/70039	RAL **8004** 49/66130 38/60004	RAL **8024** 49/66060 38/60024	RAL **9018** 49/72490 38/10018

TIGER Worldwide Network

EUROPE

AUSTRIA
TIGER Coatings GmbH & Co. KG
A-4600 Wels
phone +43 / (0)7242 / 400-0
fax +43 / (0)7242 / 650 08
office@tiger-coatings.com
www.tiger-coatings.com

BELGIUM
Mr. Eric Kun
B-3680 Maaseik
phone +32 / (0)497 / 41 57 97
fax +32 / (0)89 / 56 78 58
office.be@tiger-coatings.com

C&E Warehousing
B-3640 Kinrooi
phone +32 / (0)497 / 92 25 70
fax +32 / (0)89 / 56 78 58

BOSNIA & HERZEGOVINA
Klio d.o.o.
BiH-75300 Lukavac
phone +387 / 35 / 555 392
fax +387 / 35 / 553 256
office.bih@klio.hr

Klio 1
BiH-71210 Ilidža, Sarajevo
phone +387 / 33 / 626 621

BULGARIA
Deyacolor LTD
BG-1113 Sofia 13 post box no. 265
phone/fax +359 / 2 978 58 61
office@deyacolor.com

CROATIA
Klio d.o.o.
CRO-10360 Zagreb Sesvete
phone +385 / (0)1 / 200 90 41
fax +385 / (0)1 / 200 90 43
klio@klio.hr

CZECH REPUBLIC
TIGERLAK, s.r.o.
CZ-620 00 Brno
phone +420 / 545 429 110
fax +420 / 545 229 209
office.cz@tiger-coatings.com

DENMARK
Ms. Brigitte Pudor Gullev
DK-6200 Aabenraa
phone +45 / 73 62 13 23
mobil +45 / 21 20 45 20
fax +45 / 73 62 13 24
office.dk@tiger-coatings.com

FRANCE
TIGER S.A.R.L.
F-69480 Anse
phone +33 / (0)474 / 67 13 70
fax +33 / (0)474 / 67 10 42
office.fr@tiger-coatings.com

GERMANY
KLOZ Kunststofftechnik GmbH
D-70736 Fellbach-Oeffingen
phone +49 / (0)711 / 95 19 80 32
fax +49 / (0)711 / 518 07 50
info@kloz-kunststofftechnik.de

KLOZ Wickede
D-58739 Wickede-Ruhr
phone +49 / (0)2377 / 36 25
fax +49 / (0)2377 / 26 22

Jochen Hänel Handelsvertretung
D-65239 Hochheim a. M.-Süd
phone +49 / (0)6146 / 83 58 81
fax +49 / (0)6146 / 83 58 84
jhaenel@gmx.de

Boris Herrmann Handelsvertretung
D-44309 Dortmund
phone +49 / (0)231 / 25 70 12
fax +49 / (0)231 / 25 70 15
b.herrmann@tiger-coatings.com

Thomas Leitzke Handelsvertretung
D-47647 Kerken
phone +49 / (0)2833 / 57 39 32
fax +49 / (0)2833 / 57 39 33
t.leitzke@tiger-coatings.com

GREAT BRITAIN
TIGER COATINGS UK LTD
Solihull, West Midlands, B93 9EG
phone +44 / (0) 1564 778 866
fax +44 / (0) 1564 778 903
office.gb@tiger-coatings.com

HUNGARY
TIGERLAKK Kft.
H-1183 Budapest
phone +36 / 1 / 293 90 20
fax +36 / 1 / 297 45 49
office.hu@tiger-coatings.com

ITALY
TIGER Drylac Italia s.r.l.
I-24121 Bergamo
phone +39 / 035 / 417 39 67
fax +39 / 035 / 22 37 11
office.it@tiger-coatings.com

LITHUANIA, LATVIA
UAB „LAKMALIT“
LT-3000 Kaunas
phone +370 / 7 / 32 37 41, 32 34 95
fax +370 / 7 / 32 40 87
kaunas@lakmalit.lt

THE NETHERLANDS
Mr. Ben de Jong
NL-2133 GJ Hoofddorp
phone +31 / (0)6 / 419 956 80
fax +31 / (0)23 / 565 58 72
office.nl@tiger-coatings.com

POLAND
Tensor Consulting
PL-04512 Warszaw
phone +48 / (0)22 / 815 42 79
fax +48 / (0)22 / 815 42 79
ajelonek@tensor.com.pl

ROMANIA
SC TIGER Coatings Romania SRL
R-010631 Bucuresti
phone +40 / (0)21 / 314 77 37
fax +40 / (0)21 / 314 77 87
office.ro@tiger-coatings.com

RUSSIA
OOO TECHNOKOLOR-M
107370 Moscow, Russia
phone +007 / 495 / 966 75 08
fax +007 / 495 / 963 47 45
sales@technocolor.ru

SERBIA
Klio NS d.o.o.
SCG-21000 Novi Sad
phone +381 / 21 / 478 01 08
fax +381 / 21 / 641 00 40
office@klio.co.yu

SLOVAKIA
TIGERLAK Slovakia spol.s r.o.
SK-902 01 Pezinok
phone +421 / (0)33 / 640 00 71
fax +421 / (0)33 / 640 00 72
office.sk@tiger-coatings.com

SLOVENIA
T-Lotus d.o.o.
SLO-9240 Ljutomer
phone +386 / (0)2 / 583 18 79
fax +386 / (0)2 / 583 18 80
kontakt@t-lotus.si

SPAIN
TIGER Coatings GmbH & Co. KG
12001 Castellón - SPAIN
phone +34 / (0)664 / 328 449
fax +34 / (0)964 / 050 309
office.es@tiger-coatings.com

SWITZERLAND
FEYCO AG
CH-9430 St. Margrethen SG
phone +41 / (0)71 / 747 84 11
fax +41 / (0)71 / 747 85 10
info@feyco.ch

TURKEY
Enki Iç ve Dis Tic. Paz. Dan. San. Tic. Ltd.Sti.
No: 26 Dk: 1Kadıköy-Istanbul
phone +90 / (0)216 / 467 38 57
fax +90 / (0)216 / 467 39 13
b.gurkan@tiger-coatings.com

UKRAINE
Interfarb - Ukraina
UA-79012 Lvov
phone/fax +380 / 322 / 40 23 11
phone/fax +380 / 322 / 97 10 76
interfarb@utel.net.ua

THE AMERICAS

ARGENTINA
Glass + Partner S.A.
AR-1429 Buenos Aires
phone +54 / 114 / 541 70 58
fax +54 / 114 / 541 70 58
glasspartner@arnet.com.ar

BRAZIL
TIGER Drylac do Brasil Ltda.
13295-000 ITUPEVA SP
phone +55 / 11 / 44 96 53 27
fax +55 / 11 / 44 96 65 14
office.br@tiger-coatings.com

CANADA
ONTARIO: TIGER Drylac Canada Inc.
Guelph, Ontario, N1G 4P5
phone +1 / 519 / 766 47 81
fax +1 / 519 / 766 47 87
info@tigerdrylaccanada.com

QUEBEC: TIGER Drylac Canada Inc.
Anjou, Quebec H1E 1P2
phone +1 / 514 / 351 53 31
fax +1 / 514 / 351 40 15
tigerqc@microtec.net

CALGARY: TIGER Drylac Canada Inc.
Calgary, Alberta Canada T2E 6L7
phone +1 / 403 / 398 97 23
fax +1 / 403 / 398 97 25
info@tigercalgary.bidcon.net

VANCOUVER: TIGER Drylac Canada Inc.
Delta, BC V3M 5P8
phone +1 / 604 / 540 97 26
fax +1 / 604 / 540 97 25
vancouver@tigerdrylaccanada.com

CHILE
TIGER Drylac de Chile Ltda.
San Ramon, Santiago de Chile
phone +56 / 2 / 511 56 59
fax +56 / 2 / 511 56 59
office.cl@tiger-coatings.com

MEXICO
TIGER Drylac MEXICO S.A. DE C.V.
Col. Santa Cruz Acatlan, Naucalpan
Edo. de Mexico C.P. 53150
phone +52 / 555 / 363 12 14
fax +52 / 555 / 363 17 39
mexico@tigerdrylac.com

U.S.A.
TIGER Drylac U.S.A., Inc. (HQ´s)
Ontario, CA 91761
phone +1 / 909 / 930 91 00
fax +1 / 909 / 930 91 11
customerservicewest@tigerdrylac.com

TIGER Drylac U.S.A., Inc.
St. Charles, IL 60174
phone +1 / 630 / 513 99 99
fax +1 / 630 / 513 99 98
customerservicemw@tigerdrylac.com

TIGER Drylac U.S.A., Inc. (HQ´s)
Reading, PA 19605
phone +1 / 610 / 926 81 48
fax +1 / 610 / 926 81 49
customerserviceeast@tigerdrylac.com

TIGER Drylac U.S.A., Inc.
Kennesaw, GA 30144
phone +1 / 770 / 218 24 90
fax +1 / 770 / 218 24 95
customerservicese@tigerdrylac.com

TIGER Drylac U.S.A., Inc.
Arlington TX 76011
phone +1 / 817 / 277 79 95
fax +1 / 817 / 277 19 31
customerservicesouth@tigerdrylac.com

MIDDLE EAST

UNITED ARAB EMIRATES
TIGER Coatings Middle East (FZE)
Sharjah
phone +971 / (0)6 / 559 06 23
fax +971 / (0)6 / 559 06 24
office.ae@tiger-coatings.com

ASIA

CHINA
TIGER Drylac (Taicang) Co. Ltd.
Taicang, Jiangsu 215400
P.R. China
phone +86 / (0)512 / 53 56 06 19
fax +86 / (0)512 / 53 95 50 95
office.cn@tiger-coatings.com

TIGER Drylac Beijing Warehouse
Shibali dian Chaoyang, Beijing
P.R. China
phone +86 / (0)10 / 87 30 44 38
fax +86 / (0)10 / 67 70 35 04

TIGER Drylac Guangzhou Warehouse
Nancun town, Panyu Guangzhou
P.R. China
phone +86 / (0)20 / 84 59 29 01
fax +86 / (0)20 / 34 57 94 97

HONG KONG
TIGER Coatings Hong Kong Limited
Kowloon, Hong Kong
phone +852 / 27 81 55 82
fax +852 / 27 82 58 86
office.hk@tiger-coatings.com

INDIA
National Corporation
Bangalore-560 002, INDIA
phone +91 / (0)80 / 222 265 54
fax +91 / (0)80 / 222 148 00
rsachdev@vsnl.com

JAPAN
TIGER Drylac JAPAN K.K.
Kanagawa, 229-1135, JAPAN
phone +81 / (0)42 / 760 60 56
fax +81 / (0)42 / 760 60 57
office.jp@tiger-coatings.com

MALAYSIA
TIGER Drylac MALAYSIA Sdn. Bhd.
50250, Kuala Lumpur
phone +60 / (0)3 / 20 39 43 15
fax +60 / (0)3 / 20 31 83 59
office.my@tiger-coatings.com

SINGAPORE
TIGER Drylac SINGAPORE Pte. Ltd.
SINGAPORE 759196
phone +65 / 67 59 94 33
fax +65 / 67 59 94 36
office.sg@tiger-coatings.com

TAIWAN
Vigorousport Int. Co., Ltd.
Taichung, TAIWAN
phone +886 / (0)4 / 23 82 21 23
fax +886 / (0)4 / 23 82 21 11
office.tw@tiger-coatings.com

THAILAND
Grand Siam Commercial Co., Ltd.
Bangkok 10320
phone +66 / 2 / 691 62 74
fax +66 / 2 / 691 22 25
apichart@samart.co.th

VIETNAM
TIGER Drylac Vietnam Co., Ltd.
Binh Duong Province
phone +84 / 650 / 758 370
fax +84 / 650 / 758 371
office.vn@tiger-coatings.com

TIGER Drylac Ha Noi Warehouse
Ha Noi
phone +84 / 4 / 762 81 65
fax +84 / 4 / 762 81 64

POWDER COATED TOUGH™

Member of the Powder Coating Institute and the U.S. Green Building Council

MEMORANDUM

To: Village Manager Cara Pavlicek
From: Director of Public Works Kelly Hamill
Date: 2026-07-14
Subject: A Resolution Approving the Purchase of a Snowplow and Salt Spreader for Unit #300 from Monroe Truck Equipment of Monroe, Wisconsin

Overview

This equipment will be installed on an existing new Public Works vehicle which is used to complete a variety of tasks including snow plowing, sanitary lift station maintenance, roadway patching and parkway restorations. The equipment includes an under-tailgate spreader and one 9' Boss snowplow.

Fiscal Impact

Funds are included in the adopted FY27 Budget, General Fund account number 11-4100-613-74 (Snow Removal Equipment) for the purchase of the salt spreader and snowplow. The quote received from Monroe Truck Equipment is for one under-tailgate spreader and one 9' Boss snowplow in the amount of $19,547. The quote is included as Exhibit A. However, due to the potential for the cost of components to fluctuation, staff is requesting $3,000 in contingency to manage any increases that are passed through to the Village for a total amount of $22,547.

Recommendation

Approval.

Strategic Priority

Public and Community Safety. Provide public and community safety through education, prevention, and aligning resources with community needs.

Background

As part of the Capital Improvement Plan (CIP) and annual Budget development processes, the

Village evaluates the overall condition of its fleet and recommends replacements based on a criteria of age, condition, maintenance history and mileage. The replacement of Unit 300 was identified in the FY26 – FY30 Capital Improvement Plan and its purchase approved on October 14, 2025, with Resolution 25-R-152. Funds for the purchase of one under-tailgate spreader and one 9' Boss snowplow was included in the adopted FY27 Budget. This vehicle is used by the Public Works Department for a variety of tasks including snow plowing and maintenance.

The Village participates in a collective purchasing program that provides the Village with access to competitive pricing offered through Sourcewell (formerly National Joint Powers Alliance) ("*Sourcewell*"), enabling the Village to secure more favorable pricing through economies of scale. Sourcewell has awarded a contract (Contract No. 062222-ABEB-1) for the purchase of snow and ice equipment to Monroe Truck and Equipment or Monroe, Wisconsin ("*Vendor*"). The Vendor submitted a quote to the Village for one (1) tailgate spreader and one (1) snowplow under the Sourcewell contract for $19,547. The quote is included as *Exhibit A*. Installation of the new snowplow and salt spreader for Unit #300 will be performed by the Village's staff mechanics.

Village staff recommends including a contingency in the amount of $3,000 to address potential cost increases associated with the purchase of the one (1) tailgate spreader and one (1) snowplow ("*Equipment")* due to the potential for the cost of components to fluctuation, for a total not-to-exceed spending authority for the Equipment, inclusive of materials and contingency, of $22,547.

Staff will be present at the Village Board of Trustees meeting to answer any questions that may arise.

A Resolution Approving the Purchase of a Snowplow and Salt Spreader for Unit #300 from Monroe Truck Equipment, Inc. of Monroe, Wisconsin
A - Equipment Quote from Monroe Truck Equipment
Supplemental Information - Sourcewell Contract Number 062222

Resolution 2026-_____

BE IT RESOLVED by the President and Board of Trustees of the Village of Northbrook, County of Cook and State of Illinois, THAT:

A Resolution Approving the Purchase of a Snowplow and Salt Spreader for Unit #300 from Monroe Truck Equipment, Inc. of Monroe, Wisconsin

is hereby adopted, as follows:

Section 1. Recitals.

As part of the Capital Improvement Plan (CIP) and FY Budget preparation processes, the Village evaluates the overall condition of its fleet and recommends replacements based on a criteria of age, condition, maintenance history and mileage. The replacement of Unit 300 was identified in the FY26 – FY30 CIP and its purchase approved on October 14, 2025, with Resolution 25-R-152. Funds for the purchase of one under-tailgate spreader and one 9' Boss snowplow was included in the adopted FY27 Budget. This vehicle is used by the Public Works Department for a variety of tasks including snow plowing and maintenance.

The Village participates in a collective purchasing program that provides the Village with access to competitive pricing offered through Sourcewell (formerly National Joint Powers Alliance) ("***Sourcewell***"), enabling the Village to secure more favorable pricing through economies of scale. Sourcewell has awarded a contract (Contract No. 062222-ABEB-1) for the purchase of snow and ice equipment to Monroe Truck and Equipment, Inc. or Monroe, Wisconsin **("*Vendor*")**. The Vendor submitted a quote to the Village for one tailgate spreader and one snowplow ("***Equipment***") under the Sourcewell contract for $19,547. The quote is included as ***Exhibit A***.

Village staff recommends including a contingency in the amount of $3,000 to address potential cost increases associated with the purchase of the Equipment due to the potential for the cost of components to fluctuation, for a total not-to-exceed spending authority for the Equipment, inclusive of materials and contingency, of $22,527. Installation of the new snowplow and salt spreader for Unit #300 will be performed by the Village's staff mechanics. The Village's adopted Fiscal Year 2026-27 Budget provides sufficient funds for this project in General Fund Account No. 11-4100-613-74 (Snow Removal Equipment) for these expenditures.

The President and the Board of Trustees have considered the purchase of the Equipment and have determined that it is in the best interests of the Village and the public.

Section 2. Approval of Purchase and Expenditures

The Village Manager is hereby authorized and directed to execute such documents and to make such payments as are necessary to complete the procurement of the Equipment from the Vendor at the pricing set forth in ***Exhibit A***.

Section 3. Authorization to Execute Change Orders

The Village Manager and Village Clerk are authorized and directed to execute one or more change orders for additional work or equipment consisting of unforeseen items related to, or arising from

other work or purchases contemplated by, the scope of work in the Vendor's proposal in an amount not to exceed $3,000.00, subject to budget appropriation and the Village Manager making the necessary determination that the work contemplated by the change order complies with Section 33E-9 of Article 33E of the Criminal Code of 1961 and placing a copy of such determinations in the project file.

Approved:

RESULT:
MOVER:
SECONDER:
AYES:
NAYES:
ABSTAIN:
ABSENT:

ATTEST:

_____
Village President

_____
Village Clerk

monroe
a brand of aebi schmidt

1051 W 7th Street
Monroe, WI 53566
Sales Rep: Tim Reynolds
Ph: 815-275-0223
www.MonroeTruck.com

J.O. #
Quotation ID: 9KB2000567
Date: 6/19/2026
Valid thru: 7/19/2026
Terms: NET 30
Quoted by: Kevin Book
Ph/Fax: 608-329-8158 /

Quoted to:
NORTHBROOK,VILL OF (ATTN: JASON METLER)
1227 CEDAR LN
NORTHBROOK, IL 60062
Ph: 847-272-5050 **/ Fax:** 847-272-9760
Email:

Chassis Information

Year: *2025*	***Make:*** *FORD*		***Model:*** *F-550*		***Chassis Color:***	***Cab Type:*** *REGULAR*
Single/Dual: *DRW*	***CA:*** *84.0*	***CT:*** *-1.0*	***Wheelbase:*** *169.0*	***Engine:*** *GAS*	***F.O. Number #:***	***Vin:***

Notes:

Monroe Truck Equipment, Inc. is pleased to offer the following quote for your review:

Description	Amount

9' BOSS SUPER DUTY STEEL STRAIGHT BLADE SNOWPLOW
- SMARTHITCH 2
- SMARTTOUCH 2 CONTROLLER
- SL3 L.E.D. LIGHTING W/ ICE SHIELD TECHNOLOGY
- SMARTSHIELD
- HIGH-PERFORMANCE HYDRAULIC PACKAGE
- ENCLOSED HYDRAULICS
- CHAINLESS HYDRAULIC CYLINDER LIFTING SYSTEM
- HEAVY-DUTY PUSH FRAME
- REINFORCED STEEL MOLDBOARD
- CAST-IRON PLOW SHOES
- RUBBER SNOW DEFLECTOR
- INSTALLED
- TWO-YEAR LIMITED WARRANTY

BUYERS SNOWDOGG 96" ELECTRIC UNDER-TAILGATE SPREADER
- 304 STAINLESS STEEL
- MATERIAL SPREAD UP TO 25'
- TWO 12 VDC DIRECT DRIVE MOTORS (3/4 HP FOR AUGER, 1/2 HP FOR SPINNER)
- STANDARD DISCHARGE
- 14" POLY SPINNER AND STAINLESS STEEL DUMP BODY MOUNTING PLATES
- 10-GAUGE TROUGH HAS 3-POINT HINGED BOTTOM COVER FOR EASY ACCESS TO ENTIRE AUGER ASSEMBLY AND ONE-PERSON CLEANOUT
- 6" AUGER WITH 3/8" FLIGHTING, INCLUDES AUGER SCREEN
- SEALED, SELF-ALIGNING 1-1/4" DIAMETER BEARINGS WITH GREASE FITTINGS
- STAINLESS STEEL SPILL SHIELDS
- INSTALLED

Quote Total: $19,547.00

***** NOTICE: We are closely monitoring the tariff situation very carefully. Aebi Schmidt North America and its Monroe brand manufacture products in the United States, so the direct impact of current tariffs will be moderate. Although we make significant efforts to source components domestically, this is not always feasible. At this time, we cannot predict the potential cost increases that may arise through our supply chain or from further tariffs. We understand that this may raise concerns, and we want to assure you that we are working hard to minimize any impact on our customers and if cost increases need to be applied to existing or future orders, we will discuss these changes with our customers upfront.***

Additional Options:

Description	Amount	Add to quote? Yes / No

Terms & Conditions

- Terms are Due Upon Receipt unless prior credit arrangements are made at the time of order.
- Please note if chassis is furnished, it is as a convenience and terms are Net Due on Receipt of Chassis.
- State and Federal taxes will be added where applicable. **Out-of-state municipal entities may be subject to Wisconsin sales tax.**
- Restocking fees may be applicable for cancelled orders.
- MTE is not responsible or liable for equipment that does not meet local/state regulations if those laws are not made known at time of order.

By signing and accepting this quote, the customer agrees to the terms listed above and has confirmed that all chassis information listed above is accurate to chassis specs.

Re-Assign (Required for all pool units): ☐ Fleet ☐ Retail	**MSO/MCO** (ONLY check if legally required): ☐ MCO ☐ MSO	
Customer Signature:	**Customer P.O. Number:**	**Date of Acceptance:**

. General Terms and Conditions for the Sale of Goods by Subsidiaries of ASH North America, Inc.

SCOPE AND VALIDITY

1.1. These General Terms and Conditions for the Sale of Goods (these "Terms") govern the sale and delivery of all goods and products (the "Products"), and all transactions incidental thereto, by such subsidiary of ASH North America, Inc. identified on the respective Confirmed Order (as defined below) as the seller or supplier ("Seller") to any of its customers (each a "Customer"). The liability of each such subsidiary under these Terms or any Confirmed Order shall be several and not joint. Customer acknowledges and agrees that nothing in these Terms or any Confirmed Order shall be construed as implying joint liability in any case of ASH North America, Inc. or any of its subsidiaries. Each Seller shall be solely responsible for its own acts or omissions under the respective agreement with Customer.

1.2. No other terms or conditions shall be of any force or effect unless otherwise specifically agreed upon by Seller in a writing duly executed by an authorized officer of Seller. These Terms supersede any and all prior oral quotations, communications, agreements, or understandings of the parties in respect to the sale and delivery of the Products. The Seller may issue additional Terms and Conditions of Sale for certain products. These shall apply in addition to to the present Terms. Any additional or different terms or conditions contained in Customer's Order (as defined below), response to Seller's confirmation, or any other form or document supplied by Customer are hereby expressly rejected and are rendered null, void, and of no effect. These Terms may not be modified, amended, waived, superseded, or rescinded, except by written agreement signed by an authorized officer of Seller. Delivery of the Products by Seller does not constitute acceptance of any of Customer's terms and conditions and do not serve to modify or amend these Terms.

1.3. The issuance of an Order (as defined below) by Customer to Seller or any communication or conduct of Customer which confirms an agreement for the delivery of Products by Seller, as well as acceptance in whole or in part by Customer of any delivery of Products by Seller, shall be construed as Customer's acceptance of these Terms.

2. OFFERS, ORDERS AND CONFIRMATION

2.1. Unless otherwise specified by Seller in writing, all offers made by Seller are not binding and may be revoked by Seller at any time without any liability to Customer.
2.2. Customer shall issue to Seller orders for the purchase of Products, in written form via the order process determined by Seller from time to time (each, an "Order"). By issuing an Order to Seller, Customer makes an offer to purchase the Products pursuant to these Terms and the terms set forth on such Order. Provided that the Order contains the same terms as in Seller's corresponding offer, the Order shall be binding on Customer for six (6) weeks after Seller's receipt of such Order.
2.3. Seller may refuse an Order for any or no reason. No Order is binding upon Seller until Seller's acceptance of the Order in writing**,** the issuance of any governmental permit, license, or authority to Seller, as may be required under applicable laws, rules and regulations, and the receipt by Seller of a resale license to be provided by Customer (a "Confirmed Order").
2.4. Specifications and other information on drawings, data sheets, pictures, plans, brochures, catalogs, or Seller's website shall not be binding on Seller unless such specifications and information have been agreed to in writing by Seller in a Confirmed Order. Notwithstanding a Confirmed Order, Seller shall have no obligation to deliver Products to Customer or otherwise fulfill any of its obligations set forth in a Confirmed Order if Customer is in breach of any of its obligations hereunder or any Confirmed Order.
2.5. Customer may submit to Seller written requests to change the terms of a Confirmed Order (each such request, a "Change Order Request"). Seller may, at its sole discretion, consider such Change Order Request, provided that Seller will have no obligation to perform any Change Order Request unless and until Seller has agreed in writing to adopt such Change Order Request. If Seller elects to consider such a Change Order Request, then Seller shall promptly notify Customer of any adjustment to the applicable purchase price for the Products.
2.6. In the event Customer cancels any Confirmed Order for any reason, Customer shall reimburse to Seller all of Seller's costs and expenses associated with or incurred due to such cancellation, including but not limited to the cost of raw materials, labor, and storage if cancellation occurs before Seller's commencement of production. In the event Customer cancels any Confirmed Order for any reason and Seller has started the production of the Product on the respective Confirmed Order, Customer shall pay to Seller the full purchase price.
2.7. Each Confirmed Order shall be considered a separate agreement between the parties, and any failure to deliver the Products under any Confirmed Order shall have no consequences for other deliveries of Products.

3. PRICES

3.1. Unless otherwise agreed to by the parties in the applicable Confirmed Order, the prices of the Products shall be FCA (agreed delivery location on the applicable Confirmed Order), Incoterms 2022.
3.2. Unless otherwise agreed by the parties in a Confirmed Order, the price of the Products shall not include transportation, insurance, packaging, and Tooling (as defined below) and other materials used for the manufacturing and delivery, sales or use tax or any other similar applicable federal, state or foreign taxes, duties, levies, or charges in any jurisdiction in connection with the sale or delivery of the Products ("Taxes"), Such Taxes shall be payable by Customer, and if Seller is responsible for the collection thereof, such Taxes shall either be added to the price invoiced or be separately invoiced by Seller to Customer. Any special requests concerning shipping, transportation, and insurance shall be communicated to Seller in a timely manner and subject to Seller's prior written approval. Customer shall bear all costs resulting from such requests.
In case of lead delivery times of more than two (2) months, Customer hereby acknowledges and agrees that Seller, may, at its sole discretion, increase or decrease the agreed prices on any Confirmed Order in the event of material price changes in wages, materials, energy or raw material after the date of the Confirmed Order.

4. PAYMENT TERMS

4.1. Except as set forth in Section 4.2 or unless otherwise agreed in writing by Seller, the purchase price for the Products and all other amounts due under a Confirmed Order shall be due and payable in US dollars within thirty (30) days following the date of Seller's invoice for such Products without any discount, deduction or offset whatsoever. In no event shall any loss, damage, injury or destruction, Force Majeure (as defined below), or any other event beyond Customer's control release Customer from its obligation to make the payments required herein. Payment of all amounts due hereunder shall be made by bank transfer or in any other manner set forth on Seller's invoice. Customer shall be solely responsible for any bank fees, or other fees, incurred due to the wire transfer or any other selected payment method. If Seller agrees to payment by credit card, Seller shall charge an appropriate transaction fee, which the Customer shall also pay.
4.2. In the event Seller becomes aware of circumstances or has reason to believe that there are circumstances that may have an adverse effect on Customer's financial condition, Seller may require the Customer to pay the total amount of the purchase price or fees, or a portion thereof prior to the delivery of the Products. Seller may, without any liability to Customer, refuse the delivery of any Product in the event the Customer fails to make the payment as required under this Section 4.2.
4.3. Time is of the essence for the payment of all amounts due to Seller under any Confirmed Order. If Customer fails to make payments of any amount when due, Customer shall pay interest to Seller at the rate of one percent (1%) per month or such lesser amount as may be permitted by applicable law starting from the due date until payment to Seller of such amount in full. In addition to the interest, Seller may, at its sole discretion, charge the Customer a flat fee of $40 for each reminder notice issued to Customer due to late payments. If Customer fails to comply with these Terms or a Confirmed Order, or if Customer becomes insolvent, all balances then due and owing to Seller shall become due immediately, notwithstanding any payment terms agreed by the parties. All costs and expenses incurred by Seller with respect to the collection of overdue payments (including, without limitation, reasonable attorney's fees, expert fees, and other expenses of litigation) shall be borne by Customer. Every payment by Customer shall first be applied to pay for Seller's cost of collection, then interest owed by Customer, and then to the oldest outstanding claim.
4.4. Notwithstanding anything in the foregoing Section 4.3 or Section 5, if the parties agreed on installment payments in a Confirmed Order and Customer fails to make any installment payment when due, the remaining balance including accrued interest, and any expenses incurred by Seller shall be due and payable to Seller promptly upon Customer's receipt of written notice of delinquency from Seller.

5. SECURITY INTEREST

5.1. If Seller extends credit to Customer for the purchase price for any Products (including but not limited to pursuant to Section 4.1.), or any other amounts due to Seller, Customer hereby grants to Seller as security for the timely payment and performance of all Customer's payment obligations to Seller, a first priority security interest (the "Security Interest") in all Products heretofore or in the future delivered to Customer and in the proceeds thereof for as long as such Products shall not have been sold by Customer in the ordinary course of business (the "Collateral"). Seller shall be entitled to file any and all financing, continuation, or similar statements under the Uniform Commercial Code in any jurisdiction and take any and all other action necessary or desirable, in Seller's sole and absolute discretion, to perfect its Security Interest in the Collateral and to establish, continue, preserve, and protect Seller's

Security Interest in the Collateral. Customer agrees to take any and all actions and provide Customer with all information necessary to enable Seller to perfect and enforce its Security Interest in all jurisdictions and vis-à-vis any of Customer's creditors, and hereby irrevocably grants to Seller a power of attorney to execute all necessary statements or documents in Customer's name for the perfection and enforcement of such Security Interest. The Security Interest shall remain in force until payment in full of the entire purchase price for such Products, and any other amounts due to Seller by Customer. Seller may, without notice, change or withdraw extensions of credit at any time.

6. OBLIGATIONS OF CUSTOMER

6.1. Customer shall use the Products solely for their intended purpose and pursuant to Seller's instructions, and agrees to use only qualified personnel for the handling of the Products. Customer shall ensure that its customers, employees, agents, and other representatives comply with this Section 6.1. and shall be responsible for their acts and omissions.

7. DELIVERY AND ACCEPTANCE

7.1. Unless otherwise agreed in writing by Seller, all deliveries of Products shall be made FCA (agreed delivery location) (Incoterms 2020) and title to and risk of loss for the Products shall pass to Customer upon delivery pursuant to this Section 7.1.

7.2. Any delivery and performance times or dates communicated by or on behalf of Seller are estimates and shall not be binding on Seller. Seller may make partial delivery of Products to be delivered under any Confirmed Order and invoice Customer separately for such partial deliveries or performance. If Costumer has not received the Products after six (6) weeks from the estimated delivery date, Customer may make a written request to Seller for delivery. Customer hereby acknowledges and agrees that the actual delivery date of the Products is conditioned upon the complete, accurate and timely delivery of materials from Seller's vendors and suppliers. No delay in delivery of any Products shall relieve Customer of its obligation to accept the delivery or performance thereof and make payments of any amounts due in accordance with these Terms, including but not limited to delays caused governmental restrictions on exports or imports and similar measures.

7.3. Customer's failure to accept the delivery of Products pursuant to a Confirmed Order shall not release or excuse Customer from its obligation to timely pay all amounts due in connection with such Confirmed Order. The Products shall be deemed delivered at the time they have been made available to Customer. If Customer rejects or revokes acceptance of Products, or fails to pay any amounts when due, Seller, in its sole and absolute discretion, may extend the period of delivery of Products by such period as Seller may deem reasonable with such period not exceeding three (3) months from the agreed delivery date, or withhold or cancel delivery of any Products, or cancel any or all Confirmed Orders without any further obligations to Customer whatsoever. In such event, Customer shall be responsible for any and all costs and expenses incurred, or damages or losses suffered by Seller in connection with any such delay notwithstanding any action or inaction by Seller with regard to such delay. Any remaining Products that have not been accepted by Customer within the extended delivery period determined by Seller will be delivered and invoiced by Seller to Customer and Customer agrees to accept such delivery and pay for the purchase price and other amounts payable for the delivered Products.

8. EXAMINATION AND CONFORMITY TO ORDER

8.1. Promptly upon receipt of any Products, Customer shall conduct a full and complete inspection of such Products as to any defects and to confirm compliance with all requirements of the applicable Confirmed Order. Customer shall notify Seller in writing of any packaging defects, apparent defects, or non-compliance of such Products with the applicable Confirmed Order that Customer has or could reasonably have discovered during such inspection within seven (7) days from the date of receipt of such Products, and Customer shall notify Seller in writing within three (3) days of the date on which Customer shall first have become aware of any hidden defect or non-compliance which could not reasonably have been discovered during Customer's initial inspection of the Products. Such notification shall include reasonable details (including images) on the alleged defects including lot, batch, or Order numbers.

8.2. If Customer fails to timely notify Seller of any defects or other non-compliance of any Products delivered or Customer (or its customers, employees, agents, or representatives) uses, destroys, or modifies any Products that Customer knows or should have known to be defective or non-compliant without Seller's prior written consent, Customer shall be deemed to have unconditionally accepted such Products and waived all of its claims for breach of warranty or otherwise in respect of such Products.

8.3. Customer may only return the Products to Seller with Seller's prior written approval. If the return has been approved by Seller, Customer shall return the Products to Seller at Customer's sole risk and expense to the destination directed by Seller.

8.4. Complaints of Customer in connection with the shipping or transport shall be directed to the carrier promptly upon receipt of the delivery or the freight documents.

9. LIMITED PRODUCT WARRANTY

9.1. Seller warrants to Customer that the Products will be free of defects in material and workmanship and conform with the requirements set forth in the applicable Confirmed Order for a period of twelve (12) months from the date of delivery. (the "Limited Product Warranty").

9.2. Unless expressly agreed to in writing by Seller, Seller makes no warranty that the Products comply with applicable law, regulations, or specifications in any jurisdiction in which the Products may be used, integrated or incorporated. Any governmental or other approvals necessary in connection with the use, integration or incorporation of the Products shall be Customer's sole responsibility.

9.3. The Limited Product Warranty shall be void if the Defect (as defined below) resulted from (a) improper or inadequate use, storage, handling, operation, integration, incorporation, assembly, maintenance, or unauthorized alteration, modification, repair of the Products (including without limitation, the use storage, handling, operation, or integration of the Products contrary to written instructions and/or recommendations of Seller or inadequate training of personnel), (b) changes to construction and materials pursuant to Customer's requests, (c) use of improper tools, resources, or accessories including those but not limited to any third party tools, resources, or accessories that are not approved by Seller or not in accordance with Seller's recommendations, instructions, or directions, (d) acts or omissions of Customer or third parties following delivery of the Product, (e) Customer's failure to properly communicate Seller's instructions and warnings to users of the Products, (f) Customer's, its employees, agents, representatives, customers or any third party's non-compliance with applicable laws, rules and regulation, (g) Force Majeure, or (h) ordinary wear and tear of the Products (e.g., sweep bristles).

9.4. In the event of an alleged breach of the Limited Product Warranty (a "Defect"), Customer shall, at Customer's sole expense, send the Product to Seller. Seller shall conduct the necessary tests on such Product within a reasonable period. If Seller confirms the Defect, Seller shall, at its sole option and discretion, repair or replace the Defective Product. If the repair or replacement of the Defective Product is commercially unreasonable to Seller, Seller may, at its sole discretion, issue a refund to Customer in the amount Seller deems adequate. Such repair, replacement, or refund shall be the sole liability of Seller and the sole remedy of Customer with respect to a Defect. In no event shall any warranty claims for a Defect be made after twelve (12) months from the date of Customer's receipt of the Products. Any Products or parts returned to Seller for removal or repair under this Section 9.4 shall be the property of Seller. Any applicable Limited Product Warranty period shall not start anew with the repair or replacement of the Defective Product (or any portion thereof).

9.5. Except for Limited Product Warranty, SELLER HEREBY EXPRESSLY EXCLUDES AND DISCLAIMS ANY AND ALL OTHER WARRANTIES, WHETHER EXPRESS OR IMPLIED, INCLUDING BUT NOT LIMITED TO THE IMPLIED WARRANTIES OF MERCHANTABILITY, FITNESS FOR A PARTICULAR PURPOSE OR NONINFRINGEMENT. Seller makes no other warranties with respect to the Products, and no person is authorized to make any warranties on behalf of Seller that are inconsistent with the warranties set forth under this Section 9.

10. LIMITATION OF LIABILITY

10.1. IN NO EVENT SHALL SELLER BE LIABLE TO CUSTOMER, ITS CUSTOMERS, EMPLOYEES, AGENTS, AND OTHER REPRESENTATIVES FOR ANY INDIRECT, INCIDENTAL, PUNITIVE, SPECIAL OR CONSEQUENTIAL DAMAGES, INCLUDING BUT NOT LIMITED TO, DAMAGES FOR LOSS OF PROFITS, REVENUE, GOODWILL, OR USE, WHETHER IN AN ACTION IN CONTRACT, TORT, STRICT LIABILITY, OR IMPOSED BY STATUTE, OR OTHERWISE, EVEN IF SELLER WAS ADVISED OF THE POSSIBILITY OF SUCH DAMAGES. NOTWITHSTANDING ANY OF THE TERMS CONTAINED HEREIN, SELLER'S LIABILITY FOR ANY CLAIM – WHETHER BASED UPON CONTRACT, TORT, EQUITY, NEGLIGENCE, OR ANY OTHER LEGAL CONCEPT – SHALL IN NO EVENT EXCEED THE PURCHASE PRICE PAID BY THE CUSTOMER FOR THE PRODUCTS, GIVING RISE TO SUCH CLAIM. CUSTOMER HEREBY ACKNOWLEDGES AND AGREES THAT THE PROVISIONS OF THESE TERMS FAIRLY ALLOCATE THE RISKS BETWEEN SELLER AND CUSTOMER, THAT SELLER'S PRICING REFLECTS THIS ALLOCATION OF RISK, AND BUT FOR THIS ALLOCATION AND LIMITATION OF LIABILITY, SELLER WOULD NOT HAVE ENTERED INTO AN AGREEMENT WITH CUSTOMER FOR THE SALE OF THE PRODUCTS.

10.2. Seller shall not be liable for, and Customer assumes responsibility and shall indemnify, defend, and hold Seller harmless for any and all claims, including without limitation claims for personal injury or property damages, resulting from (a) the improper or inadequate use, storage, handling, operation, assembly, integration, incorporation, assembly, maintenance, or unauthorized alteration, modification, or repair of the Products (including without limitation, the use storage, handling, operation, or integration of the Products contrary to written instructions and/or recommendations of Seller or inadequate training of personnel), (b) changes to construction and materials pursuant to Customer's requests, (c) use of improper tools, resources, or accessories including those but not limited to any third party tools, resources, or accessories that are not approved by Seller or not in accordance with Seller's recommendations, instructions, or directions, (d) acts or omissions of Customer or third parties following the delivery of the Products, (e) Customer's failure to properly communicate Seller's instructions and warnings to users of the Products, or (f) Customer's, its employees, agents, representatives, customers or any third party's non-compliance with applicable laws, rules and regulation, (g) Force Majeure, or (h) ordinary wear and tear of the Products (e.g., sweep bristles).

10.3. In jurisdictions that limit or preclude limitations or exclusion of remedies, damages, or liability, such as liability for gross negligence or willful misconduct or do not allow implied warranties to be excluded, the limitation or exclusion of warranties, remedies, damages, or liability set forth in these Terms are intended to apply to the maximum extent permitted by applicable law, and these Terms shall be deemed amended to comply with such limitations or exclusions. Customer may also have other rights that vary by state, country or other jurisdiction.

11. CONFIDENTIALITY

11.1. "Confidential Information" means: (i) any know-how, trade secrets, and other business or technical information of Seller that is confidential or proprietary or due to its nature or under the circumstances of its disclosure the Customer knows or has reason to know should be treated as confidential or proprietary, including but not limited to quotations, drawings, project documentation, samples and models.

11.2. Confidential Information does not include information that: (i) is or becomes generally known to the public through no fault or breach of these Terms by the Customer; (ii) is rightfully known by the Customer at the time of disclosure without an obligation of confidentiality; (iii) is independently developed by the Customer without use of Seller's Confidential Information; (iv) is rightfully received by the Customer from a third party without restriction on use or disclosure; or (v) is disclosed with Seller's prior written approval.

11.3. Customer shall not use Seller's Confidential Information except as necessary to use the Products and will not disclose such Confidential Information to any third party except to those of its employees, agents, subcontractors, or representatives who have a bona fide need to know such Confidential Information to enable Customer to use the Products; provided that each such employee, agent, subcontractor, and/or representative is/are bound by a written agreement that contains use and nondisclosure restrictions not less stringent than the terms set forth in this Section 11.3. The Customer will employ all reasonable steps to protect Seller's Confidential Information from unauthorized use or disclosure, including, but not limited to, all steps that it takes to protect its own information of like importance. The foregoing obligations will not restrict the Customer from disclosing Seller's Confidential Information: (i) pursuant to the order or requirement of a court, administrative agency, or other governmental body, provided that the Customer gives reasonable notice to Seller to contest such order or requirement; (ii) to its legal or financial advisors; and (iii) as required under applicable securities regulations.

11.4. In the event of a violation or threatened violation of Customer's obligations under this Section 0, Seller shall be entitled to seek equitable relief, including in the form of a restraining order, orders for preliminary or permanent injunction, specific performance and any other relief that may be available from any court, without the requirement to secure or post any bond, or show actual monetary damages in connection with such relief. These remedies shall not be deemed to be exclusive but in addition to all other remedies available under these Terms, at law, or in equity.

12. INTELLECTUAL PROPERTY

Seller reserves the sole and exclusive ownership of the intellectual property rights in the Products (including but not limited to the technology used to manufacture the Products) and any improvements thereof regardless of inventorship or authorship. Customer shall not (and shall cause its employees, agents, representatives and customers to not) reverse engineer, decompile, disassemble, or decode any of Seller's intellectual property embedded or used in any of the Product.

13. FORCE MAJEURE

13.1. Seller shall not be responsible for any failure or delay in its performance under these Terms due to causes beyond its reasonable control, including, but not limited to, disruptions of the public power supply, communications, and transportation infrastructure, governmental measures, malware or hacker attacks, fire, extraordinary weather events, epidemics, pandemics (or any government restrictions implemented as a result thereof), nuclear and chemical accidents, earthquakes, war, terrorist attacks, labor disputes, strikes, lockouts, shortages of or inability to obtain labor, energy, raw materials or supplies, or other acts of God.

14. MISCELLANEOUS

14.1. If any provision contained in these Terms or any Confirmed Order is held by final judgment of a court of competent jurisdiction to be invalid, illegal, or unenforceable, such invalid, illegal, or unenforceable provision shall be severed from the remainder of these Terms or such Confirmed Order, and the remainder of these Terms or such Confirmed Order shall be enforced. In addition, the invalid, illegal, or unenforceable provision shall be deemed to be automatically modified, and, as so modified, to be included in these Terms, such modification being made to the minimum extent necessary to render such provision valid, legal, and enforceable.

14.2. Seller may assign its rights and/or delegate its liabilities under any Confirmed Order at any time. Customer may not assign its rights or delegate its responsibilities under a Confirmed Order without Seller's prior written consent.

14.3. Seller's waiver of any breach or violation of these Terms or the provisions of any Confirmed Order by Customer shall not be construed as a waiver of any other present or future breach or breaches by Customer.

14.4. The parties hereto are independent contractors and nothing in these Terms will be construed as creating a joint venture, partnership, employment, or agency relationship between the parties.

14.5. Notices by a party regarding the exercise of rights and obligations under these Terms must be signed by authorized representatives of such party, and delivered via courier, mail, or e-mail to the other party's address indicated in the applicable Confirmed Order, provided that a notice by e-mail shall only be validly given if receipt thereof is acknowledged in writing by the recipient.

15. ENTIRE AGREEMENT; CONFLICTS.

15.1. These Terms, including the applicable Confirmed Order, constitute the entire and exclusive agreement of the parties regarding the subject matter hereof and supersede any and all prior or contemporaneous agreements, communications, and understandings (both written and oral) regarding such subject matter. In the event of a conflict between the provisions of these Terms and the provisions of a Confirmed Order, the provisions of the Confirmed Order will govern and control. Seller may amend or modify these Terms from time to time. Seller may, at its sole discretion, provide Customer with written notice of any such changes, revisions, amendments, or modifications, provided, however that any such changes, revisions, amendments, or modifications shall become effective without any further action by any party and that they shall not apply to any Confirmed Order prior to the effective date of such changes, revisions, amendments, or modifications.

16. APPLICABLE LAW AND JURISDICTION

16.1. These Terms and the Confirmed Orders shall be governed by and construed in accordance with the laws of the State of Wisconsin without giving effect to any choice or conflict of law provision or rule that would defer to or cause the application of the substantive laws of any jurisdiction other than Wisconsin. The parties hereby expressly exclude the application of the 1980 United Nations Convention on Contracts for the International Sale of Goods.

16.2. Any dispute, controversy, or claim arising out of or relating to these Terms and any Confirmed Order, including but not limited to the execution, performance, or termination thereof or to any issue of liability arising out of the performance of these Terms or any Confirmed Order, which the parties have not been able to settle amicably shall be submitted to the exclusive jurisdiction of the state or federal courts with jurisdiction in the County of Calumet, Wisconsin, provided that notwithstanding the foregoing, Seller shall be entitled to seek specific performance and injunctive relief in any court of competent jurisdiction. Each party hereby waives any and all claims, pleas, or defenses (including without limitation a plea for *forum non conveniens*) that would permit such party to seek the jurisdiction of any courts or arbitration tribunals other than those set forth in the preceding sentence.

16.3. EACH PARTY HEREBY WAIVES, TO THE FULLEST EXTENT PERMITTED BY APPLICABLE LAW, ANY RIGHT IT MAY HAVE TO A TRIAL BY JURY IN ANY LEGAL PROCEEDING DIRECTLY OR INDIRECTLY ARISING OUT OF OR RELATING TO THESE TERMS.

DocuSign Envelope ID: 4AC71252-93BE-45B0-A93F-88619F6B31E9

Sourcewell

Solicitation Number: 062222

CONTRACT

This Contract is between Sourcewell, 202 12th Street Northeast, P.O. Box 219, Staples, MN 56479 (Sourcewell) and ASH North America, Inc., dba Aebi Schmidt North America, 201 M-B Lane, Chilton, WI 53014 (Supplier).

Sourcewell is a State of Minnesota local government unit and service cooperative created under the laws of the State of Minnesota (Minnesota Statutes Section 123A.21) that offers cooperative procurement solutions to government entities. Participation is open to eligible federal, state/province, and municipal governmental entities, higher education, K-12 education, nonprofit, tribal government, and other public entities located in the United States and Canada. Sourcewell issued a public solicitation for Snow and Ice Handling Equipment, Supplies, and Accessories from which Supplier was awarded a contract.

Supplier desires to contract with Sourcewell to provide equipment, products, or services to Sourcewell and the entities that access Sourcewell's cooperative purchasing contracts (Participating Entities).

1. TERM OF CONTRACT

A. EFFECTIVE DATE. This Contract is effective upon the date of the final signature below.

B. EXPIRATION DATE AND EXTENSION. This Contract expires August 15, 2026, unless it is cancelled sooner pursuant to Article 22. This Contract may be extended one additional year upon the request of Sourcewell and written agreement by Supplier.

C. SURVIVAL OF TERMS. Notwithstanding any expiration or termination of this Contract, all payment obligations incurred prior to expiration or termination will survive, as will the following: Articles 11 through 14 survive the expiration or cancellation of this Contract. All other rights will cease upon expiration or termination of this Contract.

2. EQUIPMENT, PRODUCTS, OR SERVICES

A. EQUIPMENT, PRODUCTS, OR SERVICES. Supplier will provide the Equipment, Products, or Services as stated in its Proposal submitted under the Solicitation Number listed above.

DocuSign Envelope ID: 4AC71252-93BE-45B0-A93F-88619F6B31E9

Supplier's Equipment, Products, or Services Proposal (Proposal) is attached and incorporated into this Contract.

All Equipment and Products provided under this Contract must be new and the current model. Supplier may offer close-out or refurbished Equipment or Products if they are clearly indicated in Supplier's product and pricing list. Unless agreed to by the Participating Entities in advance, Equipment or Products must be delivered as operational to the Participating Entity's site.

This Contract offers an indefinite quantity of sales, and while substantial volume is anticipated, sales and sales volume are not guaranteed.

B. WARRANTY. Supplier warrants that all Equipment, Products, and Services furnished are free from liens and encumbrances, and are free from defects in design, materials, and workmanship. In addition, Supplier warrants the Equipment, Products, and Services are suitable for and will perform in accordance with the ordinary use for which they are intended. Supplier's dealers and distributors must agree to assist the Participating Entity in reaching a resolution in any dispute over warranty terms with the manufacturer. Any manufacturer's warranty that extends beyond the expiration of the Supplier's warranty will be passed on to the Participating Entity.

C. DEALERS, DISTRIBUTORS, AND/OR RESELLERS. Upon Contract execution and throughout the Contract term, Supplier must provide to Sourcewell a current means to validate or authenticate Supplier's authorized dealers, distributors, or resellers relative to the Equipment, Products, and Services offered under this Contract, which will be incorporated into this Contract by reference. It is the Supplier's responsibility to ensure Sourcewell receives the most current information.

3. PRICING

All Equipment, Products, or Services under this Contract will be priced at or below the price stated in Supplier's Proposal.

When providing pricing quotes to Participating Entities, all pricing quoted must reflect a Participating Entity's total cost of acquisition. This means that the quoted cost is for delivered Equipment, Products, and Services that are operational for their intended purpose, and includes all costs to the Participating Entity's requested delivery location.

Regardless of the payment method chosen by the Participating Entity, the total cost associated with any purchase option of the Equipment, Products, or Services must always be disclosed in the pricing quote to the applicable Participating Entity at the time of purchase.

A. SHIPPING AND SHIPPING COSTS. All delivered Equipment and Products must be properly packaged. Damaged Equipment and Products may be rejected. If the damage is not readily apparent at the time of delivery, Supplier must permit the Equipment and Products to be

DocuSign Envelope ID: 4AC71252-93BE-45B0-A93F-88619F6B31E9

returned within a reasonable time at no cost to Sourcewell or its Participating Entities. Participating Entities reserve the right to inspect the Equipment and Products at a reasonable time after delivery where circumstances or conditions prevent effective inspection of the Equipment and Products at the time of delivery. In the event of the delivery of nonconforming Equipment and Products, the Participating Entity will notify the Supplier as soon as possible and the Supplier will replace nonconforming Equipment and Products with conforming Equipment and Products that are acceptable to the Participating Entity.

Supplier must arrange for and pay for the return shipment on Equipment and Products that arrive in a defective or inoperable condition.

Sourcewell may declare the Supplier in breach of this Contract if the Supplier intentionally delivers substandard or inferior Equipment or Products.

B. SALES TAX. Each Participating Entity is responsible for supplying the Supplier with valid tax-exemption certification(s). When ordering, a Participating Entity must indicate if it is a tax-exempt entity.

C. HOT LIST PRICING. At any time during this Contract, Supplier may offer a specific selection of Equipment, Products, or Services at discounts greater than those listed in the Contract. When Supplier determines it will offer Hot List Pricing, it must be submitted electronically to Sourcewell in a line-item format. Equipment, Products, or Services may be added or removed from the Hot List at any time through a Sourcewell Price and Product Change Form as defined in Article 4 below.

Hot List program and pricing may also be used to discount and liquidate close-out and discontinued Equipment and Products as long as those close-out and discontinued items are clearly identified as such. Current ordering process and administrative fees apply. Hot List Pricing must be published and made available to all Participating Entities.

4. PRODUCT AND PRICING CHANGE REQUESTS

Supplier may request Equipment, Product, or Service changes, additions, or deletions at any time. All requests must be made in writing by submitting a signed Sourcewell Price and Product Change Request Form to the assigned Sourcewell Supplier Development Administrator. This approved form is available from the assigned Sourcewell Supplier Development Administrator. At a minimum, the request must:

- Identify the applicable Sourcewell contract number;
- Clearly specify the requested change;
- Provide sufficient detail to justify the requested change;

DocuSign Envelope ID: 4AC71252-93BE-45B0-A93F-88619F6B31E9

- Individually list all Equipment, Products, or Services affected by the requested change, along with the requested change (e.g., addition, deletion, price change); and
- Include a complete restatement of pricing documentation in Microsoft Excel with the effective date of the modified pricing, or product addition or deletion. The new pricing restatement must include all Equipment, Products, and Services offered, even for those items where pricing remains unchanged.

A fully executed Sourcewell Price and Product Request Form will become an amendment to this Contract and will be incorporated by reference.

5. PARTICIPATION, CONTRACT ACCESS, AND PARTICIPATING ENTITY REQUIREMENTS

A. PARTICIPATION. Sourcewell's cooperative contracts are available and open to public and nonprofit entities across the United States and Canada; such as federal, state/province, municipal, K-12 and higher education, tribal government, and other public entities.

The benefits of this Contract should be available to all Participating Entities that can legally access the Equipment, Products, or Services under this Contract. A Participating Entity's authority to access this Contract is determined through its cooperative purchasing, interlocal, or joint powers laws. Any entity accessing benefits of this Contract will be considered a Service Member of Sourcewell during such time of access. Supplier understands that a Participating Entity's use of this Contract is at the Participating Entity's sole convenience and Participating Entities reserve the right to obtain like Equipment, Products, or Services from any other source.

Supplier is responsible for familiarizing its sales and service forces with Sourcewell contract use eligibility requirements and documentation and will encourage potential participating entities to join Sourcewell. Sourcewell reserves the right to add and remove Participating Entities to its roster during the term of this Contract.

B. PUBLIC FACILITIES. Supplier's employees may be required to perform work at government-owned facilities, including schools. Supplier's employees and agents must conduct themselves in a professional manner while on the premises, and in accordance with Participating Entity policies and procedures, and all applicable laws.

6. PARTICIPATING ENTITY USE AND PURCHASING

A. ORDERS AND PAYMENT. To access the contracted Equipment, Products, or Services under this Contract, a Participating Entity must clearly indicate to Supplier that it intends to access this Contract; however, order flow and procedure will be developed jointly between Sourcewell and Supplier. Typically, a Participating Entity will issue an order directly to Supplier or its authorized subsidiary, distributor, dealer, or reseller. If a Participating Entity issues a purchase order, it may use its own forms, but the purchase order should clearly note the applicable Sourcewell

DocuSign Envelope ID: 4AC71252-93BE-45B0-A93F-88619F6B31E9

contract number. All Participating Entity orders under this Contract must be issued prior to expiration or cancellation of this Contract; however, Supplier performance, Participating Entity payment obligations, and any applicable warranty periods or other Supplier or Participating Entity obligations may extend beyond the term of this Contract.

Supplier's acceptable forms of payment are included in its attached Proposal. Participating Entities will be solely responsible for payment and Sourcewell will have no liability for any unpaid invoice of any Participating Entity.

B. ADDITIONAL TERMS AND CONDITIONS/PARTICIPATING ADDENDUM. Additional terms and conditions to a purchase order, or other required transaction documentation, may be negotiated between a Participating Entity and Supplier, such as job or industry-specific requirements, legal requirements (e.g., affirmative action or immigration status requirements), or specific local policy requirements. Some Participating Entities may require the use of a Participating Addendum, the terms of which will be negotiated directly between the Participating Entity and the Supplier or its authorized dealers, distributors, or resellers, as applicable. Any negotiated additional terms and conditions must never be less favorable to the Participating Entity than what is contained in this Contract.

C. SPECIALIZED SERVICE REQUIREMENTS. In the event that the Participating Entity requires service or specialized performance requirements not addressed in this Contract (such as e-commerce specifications, specialized delivery requirements, or other specifications and requirements), the Participating Entity and the Supplier may enter into a separate, standalone agreement, apart from this Contract. Sourcewell, including its agents and employees, will not be made a party to a claim for breach of such agreement.

D. TERMINATION OF ORDERS. Participating Entities may terminate an order, in whole or in part, immediately upon notice to Supplier in the event of any of the following events:

1. The Participating Entity fails to receive funding or appropriation from its governing body at levels sufficient to pay for the equipment, products, or services to be purchased; or
2. Federal, state, or provincial laws or regulations prohibit the purchase or change the Participating Entity's requirements.

E. GOVERNING LAW AND VENUE. The governing law and venue for any action related to a Participating Entity's order will be determined by the Participating Entity making the purchase.

7. CUSTOMER SERVICE

A. PRIMARY ACCOUNT REPRESENTATIVE. Supplier will assign an Account Representative to Sourcewell for this Contract and must provide prompt notice to Sourcewell if that person is changed. The Account Representative will be responsible for:

DocuSign Envelope ID: 4AC71252-93BE-45B0-A93F-88619F6B31E9

- Maintenance and management of this Contract;
- Timely response to all Sourcewell and Participating Entity inquiries; and
- Business reviews to Sourcewell and Participating Entities, if applicable.

B. BUSINESS REVIEWS. Supplier must perform a minimum of one business review with Sourcewell per contract year. The business review will cover sales to Participating Entities, pricing and contract terms, administrative fees, sales data reports, performance issues, supply issues, customer issues, and any other necessary information.

8. REPORT ON CONTRACT SALES ACTIVITY AND ADMINISTRATIVE FEE PAYMENT

A. CONTRACT SALES ACTIVITY REPORT. Each calendar quarter, Supplier must provide a contract sales activity report (Report) to the Sourcewell Supplier Development Administrator assigned to this Contract. Reports are due no later than 45 days after the end of each calendar quarter. A Report must be provided regardless of the number or amount of sales during that quarter (i.e., if there are no sales, Supplier must submit a report indicating no sales were made).

The Report must contain the following fields:

- Participating Entity Name (e.g., City of Staples Highway Department);
- Participating Entity Physical Street Address;
- Participating Entity City;
- Participating Entity State/Province;
- Participating Entity Zip/Postal Code;
- Participating Entity Contact Name;
- Participating Entity Contact Email Address;
- Participating Entity Contact Telephone Number;
- Sourcewell Assigned Entity/Participating Entity Number;
- Item Purchased Description;
- Item Purchased Price;
- Sourcewell Administrative Fee Applied; and
- Date Purchase was invoiced/sale was recognized as revenue by Supplier.

B. ADMINISTRATIVE FEE. In consideration for the support and services provided by Sourcewell, the Supplier will pay an administrative fee to Sourcewell on all Equipment, Products, and Services provided to Participating Entities. The Administrative Fee must be included in, and not added to, the pricing. Supplier may not charge Participating Entities more than the contracted price to offset the Administrative Fee.

The Supplier will submit payment to Sourcewell for the percentage of administrative fee stated in the Proposal multiplied by the total sales of all Equipment, Products, and Services purchased

DocuSign Envelope ID: 4AC71252-93BE-45B0-A93F-88619F6B31E9

by Participating Entities under this Contract during each calendar quarter. Payments should note the Supplier's name and Sourcewell-assigned contract number in the memo; and must be mailed to the address above "Attn: Accounts Receivable" or remitted electronically to Sourcewell's banking institution per Sourcewell's Finance department instructions. Payments must be received no later than 45 calendar days after the end of each calendar quarter.

Supplier agrees to cooperate with Sourcewell in auditing transactions under this Contract to ensure that the administrative fee is paid on all items purchased under this Contract.

In the event the Supplier is delinquent in any undisputed administrative fees, Sourcewell reserves the right to cancel this Contract and reject any proposal submitted by the Supplier in any subsequent solicitation. In the event this Contract is cancelled by either party prior to the Contract's expiration date, the administrative fee payment will be due no more than 30 days from the cancellation date.

9. AUTHORIZED REPRESENTATIVE

Sourcewell's Authorized Representative is its Chief Procurement Officer.

Supplier's Authorized Representative is the person named in the Supplier's Proposal. If Supplier's Authorized Representative changes at any time during this Contract, Supplier must promptly notify Sourcewell in writing.

10. AUDIT, ASSIGNMENT, AMENDMENTS, WAIVER, AND CONTRACT COMPLETE

A. AUDIT. Pursuant to Minnesota Statutes Section 16C.05, subdivision 5, the books, records, documents, and accounting procedures and practices relevant to this Contract are subject to examination by Sourcewell or the Minnesota State Auditor for a minimum of six years from the end of this Contract. This clause extends to Participating Entities as it relates to business conducted by that Participating Entity under this Contract.

B. ASSIGNMENT. Neither party may assign or otherwise transfer its rights or obligations under this Contract without the prior written consent of the other party and a fully executed assignment agreement. Such consent will not be unreasonably withheld. Any prohibited assignment will be invalid.

C. AMENDMENTS. Any amendment to this Contract must be in writing and will not be effective until it has been duly executed by the parties.

D. WAIVER. Failure by either party to take action or assert any right under this Contract will not be deemed a waiver of such right in the event of the continuation or repetition of the circumstances giving rise to such right. Any such waiver must be in writing and signed by the parties.

DocuSign Envelope ID: 4AC71252-93BE-45B0-A93F-88619F6B31E9

E. CONTRACT COMPLETE. This Contract represents the complete agreement between the parties. No other understanding regarding this Contract, whether written or oral, may be used to bind either party. For any conflict between the attached Proposal and the terms set out in Articles 1-22 of this Contract, the terms of Articles 1-22 will govern.

F. RELATIONSHIP OF THE PARTIES. The relationship of the parties is one of independent contractors, each free to exercise judgment and discretion with regard to the conduct of their respective businesses. This Contract does not create a partnership, joint venture, or any other relationship such as master-servant, or principal-agent.

11. INDEMNITY AND HOLD HARMLESS

Supplier must indemnify, defend, save, and hold Sourcewell and its Participating Entities, including their agents and employees, harmless from any claims or causes of action, including attorneys' fees incurred by Sourcewell or its Participating Entities, arising out of any act or omission in the performance of this Contract by the Supplier or its agents or employees; this indemnification includes injury or death to person(s) or property alleged to have been caused by some defect in the Equipment, Products, or Services under this Contract to the extent the Equipment, Product, or Service has been used according to its specifications. Sourcewell's responsibility will be governed by the State of Minnesota's Tort Liability Act (Minnesota Statutes Chapter 466) and other applicable law.

12. GOVERNMENT DATA PRACTICES

Supplier and Sourcewell must comply with the Minnesota Government Data Practices Act, Minnesota Statutes Chapter 13, as it applies to all data provided by or provided to Sourcewell under this Contract and as it applies to all data created, collected, received, maintained, or disseminated by the Supplier under this Contract.

13. INTELLECTUAL PROPERTY, PUBLICITY, MARKETING, AND ENDORSEMENT

A. INTELLECTUAL PROPERTY

1. *Grant of License.* During the term of this Contract:
   a. Sourcewell grants to Supplier a royalty-free, worldwide, non-exclusive right and license to use the trademark(s) provided to Supplier by Sourcewell in advertising and promotional materials for the purpose of marketing Sourcewell's relationship with Supplier.
   b. Supplier grants to Sourcewell a royalty-free, worldwide, non-exclusive right and license to use Supplier's trademarks in advertising and promotional materials for the purpose of marketing Supplier's relationship with Sourcewell.
2. *Limited Right of Sublicense*. The right and license granted herein includes a limited right of each party to grant sublicenses to their respective subsidiaries, distributors, dealers,

DocuSign Envelope ID: 4AC71252-93BE-45B0-A93F-88619F6B31E9

resellers, marketing representatives, and agents (collectively "Permitted Sublicensees") in advertising and promotional materials for the purpose of marketing the Parties' relationship to Participating Entities. Any sublicense granted will be subject to the terms and conditions of this Article. Each party will be responsible for any breach of this Article by any of their respective sublicensees.

3. *Use; Quality Control.*

a. Neither party may alter the other party's trademarks from the form provided and must comply with removal requests as to specific uses of its trademarks or logos.

b. Each party agrees to use, and to cause its Permitted Sublicensees to use, the other party's trademarks only in good faith and in a dignified manner consistent with such party's use of the trademarks. Upon written notice to the breaching party, the breaching party has 30 days of the date of the written notice to cure the breach or the license will be terminated.

4. *Termination*. Upon the termination of this Contract for any reason, each party, including Permitted Sublicensees, will have 30 days to remove all Trademarks from signage, websites, and the like bearing the other party's name or logo (excepting Sourcewell's pre-printed catalog of suppliers which may be used until the next printing). Supplier must return all marketing and promotional materials, including signage, provided by Sourcewell, or dispose of it according to Sourcewell's written directions.

B. PUBLICITY. Any publicity regarding the subject matter of this Contract must not be released without prior written approval from the Authorized Representatives. Publicity includes notices, informational pamphlets, press releases, research, reports, signs, and similar public notices prepared by or for the Supplier individually or jointly with others, or any subcontractors, with respect to the program, publications, or services provided resulting from this Contract.

C. MARKETING. Any direct advertising, marketing, or offers with Participating Entities must be approved by Sourcewell. Send all approval requests to the Sourcewell Supplier Development Administrator assigned to this Contract.

D. ENDORSEMENT. The Supplier must not claim that Sourcewell endorses its Equipment, Products, or Services.

14. GOVERNING LAW, JURISDICTION, AND VENUE

The substantive and procedural laws of the State of Minnesota will govern this Contract. Venue for all legal proceedings arising out of this Contract, or its breach, must be in the appropriate state court in Todd County, Minnesota or federal court in Fergus Falls, Minnesota.

DocuSign Envelope ID: 4AC71252-93BE-45B0-A93F-88619F6B31E9

15. FORCE MAJEURE

Neither party to this Contract will be held responsible for delay or default caused by acts of God or other conditions that are beyond that party's reasonable control. A party defaulting under this provision must provide the other party prompt written notice of the default.

16. SEVERABILITY

If any provision of this Contract is found by a court of competent jurisdiction to be illegal, unenforceable, or void then both parties will be relieved from all obligations arising from that provision. If the remainder of this Contract is capable of being performed, it will not be affected by such determination or finding and must be fully performed.

17. PERFORMANCE, DEFAULT, AND REMEDIES

A. PERFORMANCE. During the term of this Contract, the parties will monitor performance and address unresolved contract issues as follows:

1. *Notification.* The parties must promptly notify each other of any known dispute and work in good faith to resolve such dispute within a reasonable period of time. If necessary, Sourcewell and the Supplier will jointly develop a short briefing document that describes the issue(s), relevant impact, and positions of both parties.
2. *Escalation.* If parties are unable to resolve the issue in a timely manner, as specified above, either Sourcewell or Supplier may escalate the resolution of the issue to a higher level of management. The Supplier will have 30 calendar days to cure an outstanding issue.
3. *Performance while Dispute is Pending*. Notwithstanding the existence of a dispute, the Supplier must continue without delay to carry out all of its responsibilities under the Contract that are not affected by the dispute. If the Supplier fails to continue without delay to perform its responsibilities under the Contract, in the accomplishment of all undisputed work, the Supplier will bear any additional costs incurred by Sourcewell and/or its Participating Entities as a result of such failure to proceed.

B. DEFAULT AND REMEDIES. Either of the following constitutes cause to declare this Contract, or any Participating Entity order under this Contract, in default:

1. Nonperformance of contractual requirements, or
2. A material breach of any term or condition of this Contract.

The party claiming default must provide written notice of the default, with 30 calendar days to cure the default. Time allowed for cure will not diminish or eliminate any liability for liquidated or other damages. If the default remains after the opportunity for cure, the non-defaulting party may:

DocuSign Envelope ID: 4AC71252-93BE-45B0-A93F-88619F6B31E9

- Exercise any remedy provided by law or equity, or
- Terminate the Contract or any portion thereof, including any orders issued against the Contract.

18. INSURANCE

A. REQUIREMENTS. At its own expense, Supplier must maintain insurance policy(ies) in effect at all times during the performance of this Contract with insurance company(ies) licensed or authorized to do business in the State of Minnesota having an "AM BEST" rating of A- or better, with coverage and limits of insurance not less than the following:

1. *Workers' Compensation and Employer's Liability.*
Workers' Compensation: As required by any applicable law or regulation.
Employer's Liability Insurance: must be provided in amounts not less than listed below:

Minimum limits:
$500,000 each accident for bodily injury by accident
$500,000 policy limit for bodily injury by disease
$500,000 each employee for bodily injury by disease

2. *Commercial General Liability Insurance.* Supplier will maintain insurance covering its operations, with coverage on an occurrence basis, and must be subject to terms no less broad than the Insurance Services Office ("ISO") Commercial General Liability Form CG0001 (2001 or newer edition), or equivalent. At a minimum, coverage must include liability arising from premises, operations, bodily injury and property damage, independent contractors, products-completed operations including construction defect, contractual liability, blanket contractual liability, and personal injury and advertising injury. All required limits, terms and conditions of coverage must be maintained during the term of this Contract.

Minimum Limits:
$1,000,000 each occurrence Bodily Injury and Property Damage
$1,000,000 Personal and Advertising Injury
$2,000,000 aggregate for products liability-completed operations
$2,000,000 general aggregate

3. *Commercial Automobile Liability Insurance.* During the term of this Contract, Supplier will maintain insurance covering all owned, hired, and non-owned automobiles in limits of liability not less than indicated below. The coverage must be subject to terms no less broad than ISO Business Auto Coverage Form CA 0001 (2010 edition or newer), or equivalent.

Minimum Limits:
$1,000,000 each accident, combined single limit

DocuSign Envelope ID: 4AC71252-93BE-45B0-A93F-88619F6B31E9

4. *Umbrella Insurance*. During the term of this Contract, Supplier will maintain umbrella coverage over Employer's Liability, Commercial General Liability, and Commercial Automobile.

Minimum Limits:
$2,000,000

5. *Professional/Technical, Errors and Omissions, and/or Miscellaneous Professional Liability*. During the term of this Contract, Supplier will maintain coverage for all claims the Supplier may become legally obligated to pay resulting from any actual or alleged negligent act, error, or omission related to Supplier's professional services required under this Contract.

Minimum Limits:
$2,000,000 per claim or event
$2,000,000 – annual aggregate

6. *Network Security and Privacy Liability Insurance*. During the term of this Contract, Supplier will maintain coverage for network security and privacy liability. The coverage may be endorsed on another form of liability coverage or written on a standalone policy. The insurance must cover claims which may arise from failure of Supplier's security resulting in, but not limited to, computer attacks, unauthorized access, disclosure of not public data – including but not limited to, confidential or private information, transmission of a computer virus, or denial of service.

Minimum limits:
$2,000,000 per occurrence
$2,000,000 annual aggregate

Failure of Supplier to maintain the required insurance will constitute a material breach entitling Sourcewell to immediately terminate this Contract for default.

B. CERTIFICATES OF INSURANCE. Prior to commencing under this Contract, Supplier must furnish to Sourcewell a certificate of insurance, as evidence of the insurance required under this Contract. Prior to expiration of the policy(ies), renewal certificates must be mailed to Sourcewell, 202 12th Street Northeast, P.O. Box 219, Staples, MN 56479 or sent to the Sourcewell Supplier Development Administrator assigned to this Contract. The certificates must be signed by a person authorized by the insurer(s) to bind coverage on their behalf.

Failure to request certificates of insurance by Sourcewell, or failure of Supplier to provide certificates of insurance, in no way limits or relieves Supplier of its duties and responsibilities in this Contract.

C. ADDITIONAL INSURED ENDORSEMENT AND PRIMARY AND NON-CONTRIBUTORY INSURANCE CLAUSE. Supplier agrees to list Sourcewell and its Participating Entities, including their officers, agents, and employees, as an additional insured under the Supplier's commercial

DocuSign Envelope ID: 4AC71252-93BE-45B0-A93F-88619F6B31E9

general liability insurance policy with respect to liability arising out of activities, “operations,” or “work” performed by or on behalf of Supplier, and products and completed operations of Supplier. The policy provision(s) or endorsement(s) must further provide that coverage is primary and not excess over or contributory with any other valid, applicable, and collectible insurance or self-insurance in force for the additional insureds.

D. WAIVER OF SUBROGATION. Supplier waives and must require (by endorsement or otherwise) all its insurers to waive subrogation rights against Sourcewell and other additional insureds for losses paid under the insurance policies required by this Contract or other insurance applicable to the Supplier or its subcontractors. The waiver must apply to all deductibles and/or self-insured retentions applicable to the required or any other insurance maintained by the Supplier or its subcontractors. Where permitted by law, Supplier must require similar written express waivers of subrogation and insurance clauses from each of its subcontractors.

E. UMBRELLA/EXCESS LIABILITY/SELF-INSURED RETENTION. The limits required by this Contract can be met by either providing a primary policy or in combination with umbrella/excess liability policy(ies), or self-insured retention.

19. COMPLIANCE

A. LAWS AND REGULATIONS. All Equipment, Products, or Services provided under this Contract must comply fully with applicable federal laws and regulations, and with the laws in the states and provinces in which the Equipment, Products, or Services are sold.

B. LICENSES. Supplier must maintain a valid and current status on all required federal, state/provincial, and local licenses, bonds, and permits required for the operation of the business that the Supplier conducts with Sourcewell and Participating Entities.

20. BANKRUPTCY, DEBARMENT, OR SUSPENSION CERTIFICATION

Supplier certifies and warrants that it is not in bankruptcy or that it has previously disclosed in writing certain information to Sourcewell related to bankruptcy actions. If at any time during this Contract Supplier declares bankruptcy, Supplier must immediately notify Sourcewell in writing.

Supplier certifies and warrants that neither it nor its principals are presently debarred, suspended, proposed for debarment, declared ineligible, or voluntarily excluded from programs operated by the State of Minnesota; the United States federal government or the Canadian government, as applicable; or any Participating Entity. Supplier certifies and warrants that neither it nor its principals have been convicted of a criminal offense related to the subject matter of this Contract. Supplier further warrants that it will provide immediate written notice to Sourcewell if this certification changes at any time.

DocuSign Envelope ID: 4AC71252-93BE-45B0-A93F-88619F6B31E9

21. PROVISIONS FOR NON-UNITED STATES FEDERAL ENTITY PROCUREMENTS UNDER UNITED STATES FEDERAL AWARDS OR OTHER AWARDS

Participating Entities that use United States federal grant or FEMA funds to purchase goods or services from this Contract may be subject to additional requirements including the procurement standards of the Uniform Administrative Requirements, Cost Principles and Audit Requirements for Federal Awards, 2 C.F.R. § 200. Participating Entities may have additional requirements based on specific funding source terms or conditions. Within this Article, all references to "federal" should be interpreted to mean the United States federal government. The following list only applies when a Participating Entity accesses Supplier's Equipment, Products, or Services with United States federal funds.

A. EQUAL EMPLOYMENT OPPORTUNITY. Except as otherwise provided under 41 C.F.R. § 60, all contracts that meet the definition of "federally assisted construction contract" in 41 C.F.R. § 60-1.3 must include the equal opportunity clause provided under 41 C.F.R. §60-1.4(b), in accordance with Executive Order 11246, "Equal Employment Opportunity" (30 FR 12319, 12935, 3 C.F.R. §, 1964-1965 Comp., p. 339), as amended by Executive Order 11375, "Amending Executive Order 11246 Relating to Equal Employment Opportunity," and implementing regulations at 41 C.F.R. § 60, "Office of Federal Contract Compliance Programs, Equal Employment Opportunity, Department of Labor." The equal opportunity clause is incorporated herein by reference.

B. DAVIS-BACON ACT, AS AMENDED (40 U.S.C. § 3141-3148). When required by federal program legislation, all prime construction contracts in excess of $2,000 awarded by non-federal entities must include a provision for compliance with the Davis-Bacon Act (40 U.S.C. § 3141-3144, and 3146-3148) as supplemented by Department of Labor regulations (29 C.F.R. § 5, "Labor Standards Provisions Applicable to Contracts Covering Federally Financed and Assisted Construction"). In accordance with the statute, contractors must be required to pay wages to laborers and mechanics at a rate not less than the prevailing wages specified in a wage determination made by the Secretary of Labor. In addition, contractors must be required to pay wages not less than once a week. The non-federal entity must place a copy of the current prevailing wage determination issued by the Department of Labor in each solicitation. The decision to award a contract or subcontract must be conditioned upon the acceptance of the wage determination. The non-federal entity must report all suspected or reported violations to the federal awarding agency. The contracts must also include a provision for compliance with the Copeland "Anti-Kickback" Act (40 U.S.C. § 3145), as supplemented by Department of Labor regulations (29 C.F.R. § 3, "Contractors and Subcontractors on Public Building or Public Work Financed in Whole or in Part by Loans or Grants from the United States"). The Act provides that each contractor or subrecipient must be prohibited from inducing, by any means, any person employed in the construction, completion, or repair of public work, to give up any part of the compensation to which he or she is otherwise entitled. The non-federal entity must report

DocuSign Envelope ID: 4AC71252-93BE-45B0-A93F-88619F6B31E9

all suspected or reported violations to the federal awarding agency. Supplier must be in compliance with all applicable Davis-Bacon Act provisions.

C. CONTRACT WORK HOURS AND SAFETY STANDARDS ACT (40 U.S.C. § 3701-3708). Where applicable, all contracts awarded by the non-federal entity in excess of $100,000 that involve the employment of mechanics or laborers must include a provision for compliance with 40 U.S.C. §§ 3702 and 3704, as supplemented by Department of Labor regulations (29 C.F.R. § 5). Under 40 U.S.C. § 3702 of the Act, each contractor must be required to compute the wages of every mechanic and laborer on the basis of a standard work week of 40 hours. Work in excess of the standard work week is permissible provided that the worker is compensated at a rate of not less than one and a half times the basic rate of pay for all hours worked in excess of 40 hours in the work week. The requirements of 40 U.S.C. § 3704 are applicable to construction work and provide that no laborer or mechanic must be required to work in surroundings or under working conditions which are unsanitary, hazardous or dangerous. These requirements do not apply to the purchases of supplies or materials or articles ordinarily available on the open market, or contracts for transportation or transmission of intelligence. This provision is hereby incorporated by reference into this Contract. Supplier certifies that during the term of an award for all contracts by Sourcewell resulting from this procurement process, Supplier must comply with applicable requirements as referenced above.

D. RIGHTS TO INVENTIONS MADE UNDER A CONTRACT OR AGREEMENT. If the federal award meets the definition of “funding agreement” under 37 C.F.R. § 401.2(a) and the recipient or subrecipient wishes to enter into a contract with a small business firm or nonprofit organization regarding the substitution of parties, assignment or performance of experimental, developmental, or research work under that “funding agreement,” the recipient or subrecipient must comply with the requirements of 37 C.F.R. § 401, “Rights to Inventions Made by Nonprofit Organizations and Small Business Firms Under Government Grants, Contracts and Cooperative Agreements,” and any implementing regulations issued by the awarding agency. Supplier certifies that during the term of an award for all contracts by Sourcewell resulting from this procurement process, Supplier must comply with applicable requirements as referenced above.

E. CLEAN AIR ACT (42 U.S.C. § 7401-7671Q.) AND THE FEDERAL WATER POLLUTION CONTROL ACT (33 U.S.C. § 1251-1387). Contracts and subgrants of amounts in excess of $150,000 require the non-federal award to agree to comply with all applicable standards, orders or regulations issued pursuant to the Clean Air Act (42 U.S.C. § 7401- 7671q) and the Federal Water Pollution Control Act as amended (33 U.S.C. § 1251- 1387). Violations must be reported to the Federal awarding agency and the Regional Office of the Environmental Protection Agency (EPA). Supplier certifies that during the term of this Contract will comply with applicable requirements as referenced above.

F. DEBARMENT AND SUSPENSION (EXECUTIVE ORDERS 12549 AND 12689). A contract award (see 2 C.F.R. § 180.220) must not be made to parties listed on the government wide exclusions in the System for Award Management (SAM), in accordance with the OMB guidelines at 2 C.F.R.

DocuSign Envelope ID: 4AC71252-93BE-45B0-A93F-88619F6B31E9

§180 that implement Executive Orders 12549 (3 C.F.R. § 1986 Comp., p. 189) and 12689 (3 C.F.R. § 1989 Comp., p. 235), "Debarment and Suspension." SAM Exclusions contains the names of parties debarred, suspended, or otherwise excluded by agencies, as well as parties declared ineligible under statutory or regulatory authority other than Executive Order 12549. Supplier certifies that neither it nor its principals are presently debarred, suspended, proposed for debarment, declared ineligible, or voluntarily excluded from participation by any federal department or agency.

G. BYRD ANTI-LOBBYING AMENDMENT, AS AMENDED (31 U.S.C. § 1352). Suppliers must file any required certifications. Suppliers must not have used federal appropriated funds to pay any person or organization for influencing or attempting to influence an officer or employee of any agency, a member of Congress, officer or employee of Congress, or an employee of a member of Congress in connection with obtaining any federal contract, grant, or any other award covered by 31 U.S.C. § 1352. Suppliers must disclose any lobbying with non-federal funds that takes place in connection with obtaining any federal award. Such disclosures are forwarded from tier to tier up to the non-federal award. Suppliers must file all certifications and disclosures required by, and otherwise comply with, the Byrd Anti-Lobbying Amendment (31 U.S.C. § 1352).

H. RECORD RETENTION REQUIREMENTS. To the extent applicable, Supplier must comply with the record retention requirements detailed in 2 C.F.R. § 200.333. The Supplier further certifies that it will retain all records as required by 2 C.F.R. § 200.333 for a period of 3 years after grantees or subgrantees submit final expenditure reports or quarterly or annual financial reports, as applicable, and all other pending matters are closed.

I. ENERGY POLICY AND CONSERVATION ACT COMPLIANCE. To the extent applicable, Supplier must comply with the mandatory standards and policies relating to energy efficiency which are contained in the state energy conservation plan issued in compliance with the Energy Policy and Conservation Act.

J. BUY AMERICAN PROVISIONS COMPLIANCE. To the extent applicable, Supplier must comply with all applicable provisions of the Buy American Act. Purchases made in accordance with the Buy American Act must follow the applicable procurement rules calling for free and open competition.

K. ACCESS TO RECORDS (2 C.F.R. § 200.336). Supplier agrees that duly authorized representatives of a federal agency must have access to any books, documents, papers and records of Supplier that are directly pertinent to Supplier's discharge of its obligations under this Contract for the purpose of making audits, examinations, excerpts, and transcriptions. The right also includes timely and reasonable access to Supplier's personnel for the purpose of interview and discussion relating to such documents.

DocuSign Envelope ID: 4AC71252-93BE-45B0-A93F-88619F6B31E9

L. PROCUREMENT OF RECOVERED MATERIALS (2 C.F.R. § 200.322). A non-federal entity that is a state agency or agency of a political subdivision of a state and its contractors must comply with Section 6002 of the Solid Waste Disposal Act, as amended by the Resource Conservation and Recovery Act. The requirements of Section 6002 include procuring only items designated in guidelines of the Environmental Protection Agency (EPA) at 40 C.F.R. § 247 that contain the highest percentage of recovered materials practicable, consistent with maintaining a satisfactory level of competition, where the purchase price of the item exceeds $10,000 or the value of the quantity acquired during the preceding fiscal year exceeded $10,000; procuring solid waste management services in a manner that maximizes energy and resource recovery; and establishing an affirmative procurement program for procurement of recovered materials identified in the EPA guidelines.

M. FEDERAL SEAL(S), LOGOS, AND FLAGS. The Supplier cannot use the seal(s), logos, crests, or reproductions of flags or likenesses of Federal agency officials without specific pre-approval.

N. NO OBLIGATION BY FEDERAL GOVERNMENT. The U.S. federal government is not a party to this Contract or any purchase by an Participating Entity and is not subject to any obligations or liabilities to the Participating Entity, Supplier, or any other party pertaining to any matter resulting from the Contract or any purchase by an authorized user.

O. PROGRAM FRAUD AND FALSE OR FRAUDULENT STATEMENTS OR RELATED ACTS. The Contractor acknowledges that 31 U.S.C. 38 (Administrative Remedies for False Claims and Statements) applies to the Supplier's actions pertaining to this Contract or any purchase by a Participating Entity.

P. FEDERAL DEBT. The Supplier certifies that it is non-delinquent in its repayment of any federal debt. Examples of relevant debt include delinquent payroll and other taxes, audit disallowance, and benefit overpayments.

Q. CONFLICTS OF INTEREST. The Supplier must notify the U.S. Office of General Services, Sourcewell, and Participating Entity as soon as possible if this Contract or any aspect related to the anticipated work under this Contract raises an actual or potential conflict of interest (as described in 2 C.F.R. Part 200). The Supplier must explain the actual or potential conflict in writing in sufficient detail so that the U.S. Office of General Services, Sourcewell, and Participating Entity are able to assess the actual or potential conflict; and provide any additional information as necessary or requested.

R. U.S. EXECUTIVE ORDER 13224. The Supplier, and its subcontractors, must comply with U.S. Executive Order 13224 and U.S. Laws that prohibit transactions with and provision of resources and support to individuals and organizations associated with terrorism.

DocuSign Envelope ID: 4AC71252-93BE-45B0-A93F-88619F6B31E9

S. PROHIBITION ON CERTAIN TELECOMMUNICATIONS AND VIDEO SURVEILLANCE SERVICES OR EQUIPMENT. To the extent applicable, Supplier certifies that during the term of this Contract it will comply with applicable requirements of 2 C.F.R. § 200.216.

T. DOMESTIC PREFERENCES FOR PROCUREMENTS. To the extent applicable, Supplier certifies that during the term of this Contract will comply with applicable requirements of 2 C.F.R. § 200.322.

22. CANCELLATION

Sourcewell or Supplier may cancel this Contract at any time, with or without cause, upon 60 days' written notice to the other party. However, Sourcewell may cancel this Contract immediately upon discovery of a material defect in any certification made in Supplier's Proposal. Cancellation of this Contract does not relieve either party of financial, product, or service obligations incurred or accrued prior to cancellation.

Sourcewell

By: DocuSigned by: Jeremy Schwartz C0FD2A139D06489...

Jeremy Schwartz

Title: Chief Procurement Officer

Date: 8/11/2022 | 1:04 PM CDT

ASH North America, Inc., dba
Aebi Schmidt North America

By: DocuSigned by: Steffen Schewerda EEA41C97ACAA48F...

Steffen Schewerda

Title: CEO - North America

Date: 8/15/2022 | 7:32 AM CDT

Approved:

By: DocuSigned by: Chad Coauette 7E42B8F817A64CC...

Chad Coauette

Title: Executive Director/CEO

Date: 8/22/2022 | 11:46 AM CDT

By: DocuSigned by: Sarah Blashe 13E4347365294F6...

Sarah Blashe

Title: CFO – North America

Date: 8/22/2022 | 10:49 AM CDT

DocuSign Envelope ID: 4AC71252-93BE-45B0-A93F-88619F6B31E9

RFP 062222 - Snow and Ice Handling Equipment, Supplies, and Accessories

Vendor Details

Company Name:	Aebi Schmidt North America
Does your company conduct business under any other name? If yes, please state:	Meyer Products, Swenson Spreader LLC, MB Companies Inc, Monroe Truck Equipment Inc, Monroe Towmaster LLC, Aebi Schmidt Canada, LLC
Address:	201 MB Lane Chilton, Wisconsin 53014
Contact:	Jason Bartuseck
Email:	jason.bartuseck@aebi-schmidt.com
Phone:	330-904-4720
HST#:	

Submission Details

Created On:	Thursday May 05, 2022 12:00:08
Submitted On:	Wednesday June 22, 2022 10:42:03
Submitted By:	Jason Bartuseck
Email:	jason.bartuseck@aebi-schmidt.com
Transaction #:	91a586e9-a139-41f3-b94d-660c65438fe8
Submitter's IP Address:	165.225.62.188

Specifications

Table 1: Proposer Identity & Authorized Representatives

General Instructions (applies to all Tables) Sourcewell prefers a brief but thorough response to each question. Do not merely attach additional documents to your response without also providing a substantive response. Do not leave answers blank; respond “N/A” if the question does not apply to you (preferably with an explanation).

Line Item	Question	Response *	
1	Proposer Legal Name (one legal entity only): (In the event of award, will execute the resulting contract as "Supplier")	ASH North America, Inc. is the holding company for all Aebi Schmidt North America businesses	*
2	Identify all subsidiary entities of the Proposer whose equipment, products, or services are included in the Proposal.	M-B Companies, Inc Swenson Spreaders, LLC Meyer Products, LLC Monroe Truck Equipment, Inc Monroe Towmaster, LLC Aebi Schmidt Canada, LLC	*
3	Identify all applicable assumed names or DBA names of the Proposer or Proposer's subsidiaries in Line 1 or Line 2 above.	M-B CO Swenson Meyer Monroe or MTE Aebi Schmidt Canada	*
4	Provide your CAGE code or Unique Entity Identifier (SAM):	Monroe Truck Equipment CAGE - 9U356 M-B Companies Unique Entity Identifier - IDHMAYZXTA6475 M-B Companies CAGE - 66234	*
5	Proposer Physical Address:	201 M-B Lane Chilton, WI 53014	*
6	Proposer website address (or addresses):	www.aebi-schmidt.com www.m-bco.com www.swensonproducts.com www.meyerproducts.com www.monroetruck.com www.towmastertruck.com	*
7	Proposer's Authorized Representative (name, title, address, email address & phone) (The representative must have authority to sign the “Proposer’s Assurance of Compliance” on behalf of the Proposer and, in the event of award, will be expected to execute the resulting contract):	Our organization requires two signatures on all documents. Steffen Schewerda CEO - North America 201 M-B Lane Chilton, WI 53014 steffen.schewerda@aebi-schmidt.com 920-898-1062 Sarah Blashe CFO - North America 201 MB Lane Chilton, WI 53014 sarah.blashe@aebi-schmidt.com 920-898-1062	*
8	Proposer's primary contact for this proposal (name, title, address, email address & phone):	Jason Bartuseck Vice President After Sales - North America 201 M-B Lane Chilton, WI 53014 jason.bartuseck@aebi-schmidt.com 330-904-4720	*

9	Proposer's other contacts for this proposal, if any (name, title, address, email address & phone):	Dave Kabat Inside Sales - M-B Companies - Brush Division 1217 E Chestnut St. Chilton, WI 53014 dave.kabat@aebi-schmidt.com 920-898-1063 Carissa Lawless Inside Sales - Swenson 127 N. Walnut St. Lindenwood, IL 61049 carissa.lawless@aebi-schmidt.com Seth DeVoe Distributor Sales Manager - Monroe Truck Equipment 1051 West 7th St Monroe, WI 53566 sdevoe@monroetruck.com 608-329-8547 Sean Brunger MB Sales Coordinator 201 MB Lane Chilton, WI 53014 sean.brunger@aebi-schmidt.com 216-339-9272 Mike Moon Meyer Customer Support 18513 Euclid Ave Cleveland, OH 44112 mike.moon@aebi-schmidt.com 216-486-1313

Table 2: Company Information and Financial Strength

Line Item	Question	Response *
10	Provide a brief history of your company, including your company's core values, business philosophy, and industry longevity related to the requested equipment, products or services.	The privately held Aebi Schmidt Group is the world's largest and oldest manufacturer of municipal maintenance equipment, dating back to 1883. Group vision for the Aebi Schmidt Group is to be the global leader in intelligent solutions for customers to fulfill their mission of clean and safe infrastructure of demanding areas. Group mission is to improve customers performance with dependable solutions and first class service. To allow our employees to thrive in an environment of team spirit, long-term development and growth mindset. The formation of the company dates back to 1883 in which the Aebi mechanical workshop was founded in Burgdorf, Switzerland. In 1920, Alfred Schmidt Sr. started the Schmidt workshop in St. Blasien, Germany. In 1936, Schmidt launched its first snow plow into the market. Fast forward to 2007, Aebi and Schmidt were brought together under the umbrella of Aebi Schmidt Holding AG. In 2015, the group entered the North America market with the acquisition of Meyer Products, LLC and Swenson Spreader, LLC to start the holding company ASH North America. In 2018, the group added M-B Companies, Inc. to the mix. M-B Companies has four divisions (Brush, Airport, Attachments, Pavement Marking) with four separate manufacturing plants. In 2019, Aebi Schmidt North America formed a new Canadian business called Aebi Schmidt Canada to support sales into Canada. In 2020, the group added to the portfolio by acquiring Quebec, Canada-based Equipements Lourds Papineau, Inc (ELP), which manufactures heavy duty snow and ice equipment for use in the harsh Canadian winters. In late 2021, Aebi Schmidt took the next step in growth by acquiring Monroe Truck Equipment based in Monroe, Wisconsin. Monroe Truck is an industry leading truck equipment manufacturer, upfitter and distributor with over 60 years of expertise. The Aebi Schmidt group has more than $800 million in annual sales, 14 production facilities across the globe, over 3,000 employees, with a presence in 90 countries throughout the world.

More information about our North American Business units:

M-B Companies, Inc.

From clearing snow to painting lines for roads, M-B Companies, Inc. manufactures the highest quality products for many industries. Utilizing the latest in innovation and technology, M-B is the trusted manufacturer of airport runway maintenance equipment, pavement striping equipment, various size truck, tractor and loader attachment equipment, replacement brushes, and much more.

The origin of M-B Companies, Inc. dates back to 1907. The company was formed by three German craftsmen, brothers Otto and Fred Meili and Paul Blumberg. Not surprising, they adopted the name "MB", which is still used today. The Meili brothers were inventors and Blumberg was an expert metalworker. They started the company in a small shop in New Holstein, Wisconsin, building agricultural implements. The Meili brothers and Blumberg were inventing and building a variety of equipment from road graders to paint stripers. In fact, the firm was one of the first Ford dealerships in the state of Wisconsin. As the company evolved, its destiny as a broom and striper manufacturer became evident. M-B built its first broom (a horse drawn model) in 1922.

Through some ownership changes, M-B has enjoyed steady growth, including the construction in 1974 of an additional facility in Chilton, Wisconsin. In 2003, M-B acquired the Pro Chip family of wood and brush chippers. In 2004, M-B acquired the Lafarge Road Marking Equipment Division, located in Montgomery, Pennsylvania. In 2011, M-B released five (5) new products in the Airport Snow Removal Equipment market. In 2017, the Pavement Marking Division relocated to a new facility located in Muncy, Pennsylvania, and services customers across North America. M-B continues to focus on key niche markets and providing equipment to meet the needs of independent contractors, governmental agencies, and other road, turf, grounds maintenance and airport maintenance organizations around the world. In 2021, M-B Companies expanded their facility and opened up the North America Headquarters for the Aebi Schmidt Group.

Swenson Spreaders, LLC

Swenson was established in 1937 in Rockford, Illinois, area as the Cherry Valley Pulverizer Company by Exkil Swenson. Mr. Swenson quickly expanded his product line to include truck-mounted spreaders for agricultural and municipal use. Swenson introduced the first hydraulically operated spreading system in 1962 and the first ground speed regulated spreading mechanism in 1967. These innovations started what has become the ever increasing use of automation in snow and ice control.

Meyer Products, LLC

Meyer's decades of innovation are a history lesson in the evolution of snow plows. Founded in 1926 in Newburgh, New York, the company later moved to Cleveland Ohio, where it's still located today. In its early years, Meyer introduced the first hydraulic lift to the North American market and later invented power angling, which enabled operators to move the plow blade left or right without having to leave the comfort of the cab. Today, Meyer is the first choice of many private truck owners and contractors in the snow and ice industry.

Monroe Truck Equipment

Monroe Truck started in 1958 in Monroe, Wisconsin. Through years of growth and the hard work of employees across the Midwest, we are now one of the largest truck equipment manufacturing and upfitting companies in country - we are working towards many more decades of growth.

Aebi Schmidt Core Values (exhibit attached in document section)

Excellence - we exceed customer expectations to achieve results
Innovation - we break new grounds
Accountability - we take ownership for our actions
Passion - we strive to make a difference
Customer Focus - we build sustainable relationships
Collaboration - we are stronger together as a team

Key Points to Business Philosophy

Sustainability

Sustainability doesn't just happen by itself. It comes from how we think and act

		and ultimately how consistent we are about it. As a company, it is our responsibility to invest in the progress and in the future. But that also applies to our customers: everything we develop and produce also needs their commitment when put into practice. Sustainability is an essential part of our business activities. Our customers expect it of us, and we are convinced that sustainable companies are a step ahead of the rest and are more successful long term. Our economic, social, and environmental targets are being implemented along the entire value chain. We care about protecting the environment and use resources sparingly. As an industry leading employer we continue to invest in sustainable technologies. We will act in a responsible and credible way along the entire value chain. This has resulted in valuable progress being made in recent years in terms of environmental awareness at our plants, in our processes and in our machines. Code of Conduct The code of conduct defines the corporate responsibility and applicable ethical standards by which we operate and addresses issues such as data privacy, environmental protection, fair competition and anti corruption. By having a clear definition of responsibilities, risk management and efficient control systems, the Aebi Schmidt Group makes sure that all statutory provisions and industry standards in a complex regulatory environment are observed. Overview Aebi Schmidt North America offers long lasting, time tested brands with product offerings that have depth and breadth in the snow and ice industry. All the products offered along with the core values and business philosophy allow us to be considered the perfect partner for Sourcewell participating entities.	
11	What are your company's expectations in the event of an award?	We intend to offer our Sourcewell contract to all member and non-member entities. It will be our lead contract over any current state contract that we hold. We will promote Sourcewell to encourage non-participating entities to become members. We expect to help customers get the products they want and need rather than what is lowest bid by means of this contract, and allow customers to purchase products that provide them with a lower total cost of ownership rather than the lower acquisition costs which most traditional bids offer. We intend to work with our contract administrator to provide training for our dealer network to help them sell the Sourcewell contract to their customers. We also intend to work into Canada with CANOE and further expand our reach into that market. We will continue to promote the Sourcewell contract on our literature as we have with past contracts and on our websites and in our trade show booths.	*
12	Demonstrate your financial strength and stability with meaningful data. This could include such items as financial statements, SEC filings, credit and bond ratings, letters of credit, and detailed reference letters. Upload supporting documents (as applicable) in the document upload section of your response.	Aebi Schmidt does not publish independent financial information as a privately held organization. Attached in the documents section is the 2021 Annual Report. Inside cover to page 5 covers most of the financial details. The numbers in the report are prior to the acquisition of Monroe Truck Equipment. 2021 produced a record high of order entry across our organization and a small growth in sales over 2020. Overall coming out of the Covid pandemic, the Aebi Schmidt Group is in solid financial shape and looking to grow over the upcoming years.	*
13	What is your US market share for the solutions that you are proposing?	Our industry does not report sales individually so defining an exact market share is not feasible. We feel for the solutions that we provide to the snow and ice industry we are the largest in the market with around 30-35% market share in the United States.	*
14	What is your Canadian market share for the solutions that you are proposing?	The industry does not report individually so an exact market share is not feasible. We feel for the solutions we provide in the snow and ice industry we provide about 10-15% of the products in Canada.	*
15	Has your business ever petitioned for bankruptcy protection? If so, explain in detail.	No	*

16	How is your organization best described: is it a manufacturer, a distributor/dealer/reseller, or a service provider? Answer whichever question (either a) or b) just below) best applies to your organization. a) If your company is best described as a distributor/dealer/reseller (or similar entity), provide your written authorization to act as a distributor/dealer/reseller for the manufacturer of the products proposed in this RFP. If applicable, is your dealer network independent or company owned? b) If your company is best described as a manufacturer or service provider, describe your relationship with your sales and service force and with your dealer network in delivering the products and services proposed in this RFP. Are these individuals your employees, or the employees of a third party?	We would be best described as a manufacturer and service provider. We have outside sales team members that are direct employees of the organization. In some cases, we sell directly to the the end users of the products and in some cases our sales people work with our dealer/distributor network. The dealer network is all third party. We have partnered with select dealers that represent our brands in their local markets. We have strategically chosen those dealers/distributors for specific areas to have the most comprehensive coverage across the United States and Canada. Many of our dealers have been doing business with our organization for over 20 years.	*
17	If applicable, provide a detailed explanation outlining the licenses and certifications that are both required to be held, and actually held, by your organization (including third parties and subcontractors that you use) in pursuit of the business contemplated by this RFP.	Our industry does not require licenses or certifications to do business. We do hold certifications of good standing in states that require them. We also have ISO certifications in many of our manufacturing plants. M-B Companies ISO 9001 certificate is included in the documents section of the response.	*
18	Provide all “Suspension or Debarment” information that has applied to your organization during the past ten years.	No suspensions or debarments have applied ever to an Aebi Schmidt Group organization.	*

Table 3: Industry Recognition & Marketplace Success

Line Item	Question	Response *	
19	Describe any relevant industry awards or recognition that your company has received in the past five years	Swenson, Meyer and Monroe Truck Equipment all have NTEA MVP status. This is an award for outstanding business practices and successful implementation of quality standards. Monroe was also awarded 2021 Ford Top 5 award.	*
20	What percentage of your sales are to the governmental sector in the past three years	85% of our sales have been from the governmental sector the past three years.	*
21	What percentage of your sales are to the education sector in the past three years	Less than 5% of our sales are from the education sector the last three years.	*
22	List any state, provincial, or cooperative purchasing contracts that you hold. What is the annual sales volume for each of these contracts over the past three years?	Sourcewell Snow & Ice - 080818-SWE - Swenson Spreader -75k per year Sourcewell Road Maintenance Equipment - 080521-AEB - MB Companies - just awarded Sourcewell Street Sweepers - 093021-AEB - MB Companies - just awarded HGAC SM10-20 Street Maintenance Equipment - M-B Companies - 900k per year South Dakota DOT Contract - Monroe Truck Equipment - 5 million per year Kansas DOT Contract - Monroe Truck Equipment - 5 million per year Nebraska DOT Contract - Monroe Truck Equipment - 5 million per year Illinois DOT Contract - Monroe Truck Equipment - 5 million per year Iowa DOT Contract - Monroe Truck Equipment - 5 million per year Washington State DOT Contract - Monroe Truck Equipment - 350k per year Utah DOT Contract - Monroe Truck Equipment - 650k per year Arizona DOT Contract - Monroe Truck Equipment - 225k per year New Mexico DOT Contract - Monroe Truck Equipment - 125k per year Montana DOT Contract - Monroe Truck Equipment - 250k per year Oklahoma DOT Contract - Monroe Truck Equipment - 750k per year Minnesota DOT Contract - Monroe Towmaster - 1.75 million per year Michigan DOT Contract - Monroe Truck Equipment - 3 million per year Indiana DOT Contract - Monroe Truck Equipment - 4 million per year New Jersey DOT - Monroe Truck Equipment - 1.5 million per year Pennsylvania DOT Contract - Monroe Truck Equipment - 250k per year Ohio DOT Contract - Monroe Truck Equipment - 1 million per year South Carolina DOT Contract - Swenson Spreader - 1 million per year North Carolina DOT Contract - Swenson Spreader - 1.6 million per year Texas DOT Contract - Swenson Spreader - 1.2 million per year Nebraska DOT Contract - Swenson Spreader - 350k per year	*
23	List any GSA contracts or Standing Offers and Supply Arrangements (SOSA) that you hold. What is the annual sales volume for each of these contracts over the past three years?	We do not currently hold any GSA, or standing offer or supply agreements at this time. We have dealers/distributors that do have these contracts, but none are held by Aebi Schmidt directly.	*

Table 4: References/Testimonials

Line Item 24. Supply reference information from three customers who are eligible to be Sourcewell participating entities.

Entity Name *	Contact Name *	Phone Number *	
Illinois Department of Transportation	Clint Faugust	217-206-0185	*
Iowa Department of Transportation	Jennifer Monserud	515-239-1607	*
South Dakota Department of Transportation	Tyler Green	605-280-9513	*
Ohio Department of Transportation	Doug Burke	614-351-2836	
Texas Department of Transportation	Kevin Fareri	512-571-4475	

Table 5: Top Five Government or Education Customers

Line Item 25. Provide a list of your top five government, education, or non-profit customers (entity name is optional), including entity type, the state or province the entity is located in, scope of the project(s), size of transaction(s), and dollar volumes from the past three years.

Entity Name	Entity Type *	State / Province *	Scope of Work *	Size of Transactions *	Dollar Volume Past Three Years *	
South Dakota Department of Transportation	Government	South Dakota - SD	Full turnkey snow and ice trucks	5 million	15 million	*
Kansas Department of Transportation	Government	Kansas - KS	Full turnkey snow and ice trucks	5 million	15 million	*
Nebraska Department of Transportation	Government	Nebraska - NE	Full turnkey snow and ice trucks	5 million	15 million	*
Illinois Department of Transportation	Government	Illinois - IL	Full turnkey snow and ice trucks	5 million	15 million	*
Iowa Department of Transportation	Government	Iowa - IA	Full turnkey snow and ice trucks	5 million	15 million	*

Table 6: Ability to Sell and Deliver Service

Describe your company's capability to meet the needs of Sourcewell participating entities across the US and Canada, as applicable. Your response should address in detail at least the following areas: locations of your network of sales and service providers, the number of workers (full-time equivalents) involved in each sector, whether these workers are your direct employees (or employees of a third party), and any overlap between the sales and service functions.

Line Item	Question	Response *	

26	Sales force.	Monroe Truck Equipment There are 5 outside sales people across the United States responsible for the municipal dealer network (approx. 75 dealers), they work with 7 internal sales people who help with the quoting process and customer service. Monroe's Municipal division also has 3 locations that sell directly to customers in Illinois, Wisconsin and Minnesota. There are 8 field sales people in this portion of the organization that work with 9 internal sales people, who provide customer service and work on quotes for customers. Swenson Spreader, LLC Swenson has 2 outside sales people that are responsible for their dealer network (approx. 75 dealers) across the United States. They also have 4 internal sales people that assist with customer services and quoting for their dealers. Meyer Products, LLC Meyer has 5 outside sales people across the United States that are responsible for their dealer network (approx. 120 dealers) and they have 2 internal sales people in customer service that assist their dealers as well. Aebi Schmidt Canada Aebi Schmidt Canada has 4 outside sales people in Canada that sell through our channels into Canada. M-B Companies, Inc. MB Companies has 1 external and 1 customer service support person to support the sales of our Brush division along with our European products. Monroe Towmaster Monroe Towmaster truck equipment has 3 sales people that handle snow and ice business for our Towmaster location in Minnesota. They handle all of the quoting and customer service in their areas. Overall we have 33 outside sales people across the United States and Canada and 23 internal sales support people. We have one of the largest and most robust sales forces in order to stay close to our customers and to provide them the service and support they need. Also, with over 250 dealer/distributors all with outside sales people across the United States and Canada we have many people representing the Aebi Schmidt brand.
27	Dealer network or other distribution methods.	Aebi Schmidt has one of the largest snow and ice distributor networks. We have around 250 certified dealers across the United States and Canada. Attached we will include in the documents section the list of distributors by brand.
28	Service force.	Our field service team consists of 11 individuals that respond in person to customer warranty and field service claims. These technicians will diagnose the problem, order parts and perform the service necessary. The technicians are located all across the lower 48 of the United States along with 1 in Alaska and 2 in Canada. We also have a number of internal service people across our business units that accept incoming calls from customers and dealers to support them with ordering parts. We believe if we don't provide proper service and support that customer will not come back, we are looking for long-term customer/manufacturer partnerships to grow the business.
29	Describe the ordering process. If orders will be handled by distributors, dealers or others, explain the respective roles of the Proposer and others.	Most of our business is through dealer channels. Primarily orders will be handled by dealers/distributors. The dealers then in turn place an order with the factory. Many dealers stock equipment and parts, but due to the nature of most units being custom, orders will be placed and manufactured when needed. In some cases (Monroe business in Illinois, Wisconsin and Minnesota) the orders would be placed directly through our service centers.
30	Describe in detail the process and procedure of your customer service program, if applicable. Include your response-time capabilities and commitments, as well as any incentives that help your providers meet your stated service goals or promises.	As a company we understand that service and support is what helps us get repeat orders. We put a tremendous amount of focus on making sure the customer has what they need for support. Our dealer channel is the first line of support for most customers of Aebi Schmidt. They understand that we have expectations for them as far as response times. Our dealers and customers both can contact the factory direct to speak to a customer service person anytime between the hours of 7:30 am - 4:30 pm CST. Our customer support team can work with our engineering team to solve any problems in an expedited manner. If parts orders are placed by 2 pm CST, the order will be shipped next day for in stock parts. Our goal is to resolve customer issues as quickly as possible and all 1500 employees in North America have the understanding that our customers come first and are always top priority.

31	Describe your ability and willingness to provide your products and services to Sourcewell participating entities in the United States.	We are fully able and eager to offer products and services to Sourcewell participating entities.	*
32	Describe your ability and willingness to provide your products and services to Sourcewell participating entities in Canada.	We are fully able and eager to offer our products to participating entities in Canada.	*
33	Identify any geographic areas of the United States or Canada that you will NOT be fully serving through the proposed contract.	We will be able to service all geographic areas.	*
34	Identify any Sourcewell participating entity sectors (i.e., government, education, not-for-profit) that you will NOT be fully serving through the proposed contract. Explain in detail. For example, does your company have only a regional presence, or do other cooperative purchasing contracts limit your ability to promote another contract?	Aebi Schmidt can service any snow and ice customer in the United States or Canada.	*
35	Define any specific contract requirements or restrictions that would apply to our participating entities in Hawaii and Alaska and in US Territories.	No restrictions in Hawaii, Alaska or US Territories	*

Table 7: Marketing Plan

Line Item	Question	Response *	
36	Describe your marketing strategy for promoting this contract opportunity. Upload representative samples of your marketing materials (if applicable) in the document upload section of your response.	Aebi Schmidt North America's marketing strategy to promote the Sourcewell contract will include a multi-pronged approach as outlined below: Selling Strategy Once awarded, Aebi Schmidt will schedule sales meetings to train the inside and outside sales people across all Aebi Schmidt brands on the specifics of the Sourcewell contract including pricing, the bidding process and other procedures. The sales team will be provided tools to effectively communicate the award to all dealers, contractors, nonprofits and government agencies throughout the U.S. and Canada to ensure the success of the contract. Marketing Strategy Leveraging Aebi Schmidt's current marketing strategy for its North America brands, the Sourcewell contract will be promoted through an aggressive multi-channel approach utilizing digital and traditional initiatives. Digital Strategy Website - Add content to Aebi Schmidt's corporate and individual branded websites reflecting the award, adding the Sourcewell logo in high- traffic locations. - Create a Sourcewell dedicated landing page on each website to house all important information for Sourcewell customers - Create landing page and data capture form for municipal/government website visitors interested in receiving emails with Sourcewell information - Optimize websites with key words and updated metadata as needed to increase search engine response for Sourcewell - Blog announcing award on the Aebi Schmidt Group corporate blog (https://blog- en.aebi-schmidt.com/) Email marketing - Execute "onboarding" email campaign for all dealers and distributors - Series of emails that will educate the Aebi Schmidt North America dealer/distributor network on the Sourcewell award, its customers, and important contract information - Emails highlighting "good to know" contract information, products that are performing well on contract, and other relevant information so that our distributors can better serve Sourcewell members - Add Sourcewell logo on pre- and post-tradeshow email campaigns - Executive email campaign for all municipality/government sales contacts in CRM - Series of emails to inform and promote the Sourcewell contract to customers and prospects - Email drip campaign for visitors providing contact information on website landing	*

page/data capture form
- Emails highlighting distributor information and products performing well on contract

Social

- Celebrate and promote Sourcewell award through organic and paid posts on Facebook, LinkedIn and Instagram channels across all brands
- Include Sourcewell logo on social posts when relevant to provide continued social presence for Sourcewell and brands.

Traditional Strategy

Trade Journal Advertising / Literature
- Use of Sourcewell logo in trade magazine advertisements
- Update product literature to include the Sourcewell logo

In-dealership Merchandising
- Create and distribute “in-store” materials to promote the Sourcewell award.
- Counter cards
- Posters
- Counter mats
- Signage

Trade Shows
- Include Sourcewell logo on signage at tradeshows
- Support trade shows with pre-show mailers, emails, and other digital promotion – including social posts – that include the Sourcewell logo

Earned Media/Public Relations Strategy

Aebi Schmidt will utilize unpaid, or earned, media to promote the Sourcewell contract. This includes garnering publicity in a variety of media outlets.
- Press release distribution and media outlet follow-up announcing the award
- Blog post with award announcement on Aebi Schmidt website (see website tactics)
- Additional blog posts with “how to” and “best practice” information regarding the contract
- Pitch stories for editorial placement in trade publications targeting snow and ice control for contractors and municipalities.

We will also ask to work with our Sourcewell representative to schedule training sessions with our dealer network. We want to partner closely with Sourcewell to promote the program across our network.
Attached in the document section will be a few examples of marketing materials.

37	Describe your use of technology and digital data (e.g., social media, metadata usage) to enhance marketing effectiveness.	Aebi Schmidt North America is supported with strong digital marketing strategies executed through corporate and brand websites, content marketing, email automation, digital display and search ads, social media platforms, and emerging technologies, such as geo-fenced marketing. Key strategies and initiatives are detailed below. Content/Email Marketing -- Creating valuable content is a key initiative for Aebi Schmidt. Offering value-added content geared to educating prospects and customers on relevant topics helps them better perform their jobs and endears them to Aebi Schmidt's brands. The cookie-obtained data we gather via these efforts helps to understand the needs of end users, which leads to product innovation and timely marketing. Aebi Schmidt also intends to use content marketing in support of the distributor, dealer and municipal network by providing qualified leads through lead-generation tools such as data-capture forms and gated content. Automated Email campaigns are an offshoot of the content strategy and are often used in support of product-specific marketing and events, such as trade shows. The goal of email automation is to offer customers and/or prospects the right products, at the right times and prices, in addition to tracking activity on calls-to-action. Search Engine Marketing (SEM) -- Aebi Schmidt North America has focused on improving search engine performance and ranking by optimizing (SEO) all its websites for improved organic results. By focusing on new content, improved metadata, updating descriptions with keywords and phrases, more strategic labeling of files, etc., improvements have been realized in organic results. Once awarded, Aebi Schmidt plans to modify its search engine strategies in support of the Sourcewell award, thereby making it easier for stakeholders to find the products and services they seek. Digital Display, Search and Banner Advertising -- On a limited basis, Aebi Schmidt uses digital display and search advertising to help create awareness of products and special promotions. In-depth keyword research and search analytics are used to develop ad targeting to best reach audience segments at the optimum cost or bid. Additionally, websites with available advertising space that are relevant to target audiences may be used for banner ads. Social Media – Aebi Schmidt North America and its brands leverage their presence on Facebook, LinkedIn, YouTube and Instagram to build brand and product awareness, while creating a strong relationship with end-users and key influencers. Organic content is posted regularly and strategic paid social campaigns with highly targeted segmentation are used. Social media channels also represent a means for Aebi Schmidt's customers and prospects to engage in two-way dialog – social channels are used as an extension of customer service efforts, with responses provided to all posted questions.	*
38	In your view, what is Sourcewell's role in promoting contracts arising out of this RFP? How will you integrate a Sourcewell-awarded contract into your sales process?	Sourcewell Promotion Sourcewell can support the promotion of contracts through regular communications to drive membership with Sourcewell and to inform existing members of new vendors and products on awarded contracts. Sourcewell can also provide vendors with marketing information that can be shared out through the variety of communication channels. Sales Process Throughout the length of the contract, the Aebi Schmidt North America marketing team will regularly communicate with the sales team regarding the contract to reinforce the information they received during training provided at beginning of contract. Reiterating the pricing, bidding process and procedures will help the sales team keep Sourcewell top-of-mind. The sales team will schedule sales calls with dealers and public sector employees, including the top 200 municipalities from Aebi Schmidt's CRM system to inform them of the Sourcewell contract and explain the benefits if they are not Sourcewell members.	*
39	Are your products or services available through an e-procurement ordering process? If so, describe your e-procurement system and how governmental and educational customers have used it.	The www.m-bco.com website has a customer login area of the portal where customers are able to find particular parts and place an order. The portal generates an email that goes to customer service to enter the order. The website also has a configurator that the customer can use to find the brush that the need to fit their application. Meyer Products also offers an area for our dealers to go online and order parts. These orders are acknowledged internally and an email is generated to the person who placed the order.	*

Table 8: Value-Added Attributes

Line Item	Question	Response *	

40	Describe any product, equipment, maintenance, or operator training programs that you offer to Sourcewell participating entities. Include details, such as whether training is standard or optional, who provides training, and any costs that apply.	We offer a program to municipal customers called Vprotect 365. This is where we offer to perform a 200 point inspection of their snow and ice truck. In the end we will provide a diagnosis with a list of parts for repair and the expected maintenance interval schedule. We will offer this for our customer that purchase a turnkey truck from our organization. This is optional. We also offer mechanic training programs and fleet maintenance programs from our service team. The costs will be listed for Sourcewell members on the pricing sheets. Our regional sales people also offer free training sessions that will be held at dealer locations that member entities can join. These are a combination of equipment and Sourcewell training to help member and non-member entities not only have a better understanding of the products, but also how to procure them.	*
41	Describe any technological advances that your proposed products or services offer.	We offer many products that are more technologically advanced than the competition. Some of the products are: Para-Glide wing post, the medium duty side dump body, blade light, Gen 4 RDS, Gen 4 FFDS, Expanded Anti-ice liquid capacity on spreaders/combination bodies, and wedge tank anti-ice inserts for dump bodies. Literature and explanations for these products will be included in the documents section of the response. We also offer a spreader called the Evolution that offers controlled spreading of a 70/30 mix of dry and liquid material for increased efficiency and more effective melting. This helps customers save up to 35% of salt usage. We also offer a small Aebi unit that can be outfitted with a snow plow, blower or any other attachment that can scale hills with up to 45 degree inclines. The Aebi unit has a lower center of gravity and wider wheel base has superior handling to any other machine in the industry, it is quite unique.	*
42	Describe any “green” initiatives that relate to your company or to your products or services, and include a list of the certifying agency for each.	Aebi Schmidt also has a full commitment to sustainability in our factories. The following green initiatives were utilized during construction of the new manufacturing and office spaces in our recently completed plant expansion and North America corporate headquarters. Additional wall insulation = R29 to reduce heating/cooling costs Additional roof insulation = R43 to reduce heating/cooling costs Foundation insulation = R7.5 to substantially reduce heat loss through the floor High efficiency windows in both buildings Toilets and urinals with low GPF (low consumption per flush) LED lighting throughout both new spaces (ultra-low energy consumption units) Occupancy sensing light controls in offices and restrooms (lights turn on when someone enters and turn off after a pre-determined time) All exterior lighting is LED controlled by a photo eye VFD air compressors (variable speeds to supply the correct amount of air when required) State of the art Powder Coat system (the system uses energy only when required to perform a process) Switch to Zirconium based pre-treatment for both wet and powder paint lines (biodegradable product can be sent directly to sanitary sewer without a pre-treatment requirement) Multi-stream recycling compactor (cardboard, paper, plastic and glass can be recycled in the same container) All of our North America factories have LED lighting throughout. All factories have segregated waste material containers for metal and cardboard scrap to get recycled. Organizational commitment to reduce paper consumption by 30%. Our locations in Germany, Austria, Sweden and Norway are powered by up to 100% sustainably produced electric. In the Netherlands, we produce more than 54% of our electricity requirements. We have 8 projects in development in our organization for e-vehicles devices and modules. Pictures of our waste containers included in documents section along with a copy of our annual report which talks about sustainability and corporate responsibility on pages 26-38.	*
43	Identify any third-party issued eco-labels, ratings or certifications that your company has received for the equipment or products included in your Proposal related to energy efficiency or conservation, life-cycle design (cradle-to-cradle), or other green/sustainability factors.	Aebi Schmidt does not have any third-party issued eco labels, ratings or certifications for the equipment that is included in this proposal. In an effort to be more sustainable we do offer electric powered spreaders and v-boxes to help protect the environment from harmful CO2 output. We are also working with chassis manufacturers to ensure that our equipment will work with the electric vehicles of the future. Ensuring that the PTO of these vehicles have the power necessary to work with plows, and other attachments.	*

44	Describe any Women or Minority Business Entity (WMBE), Small Business Entity (SBE), or veteran owned business certifications that your company or hub partners have obtained. Upload documentation of certification (as applicable) in the document upload section of your response.	Aebi Schmidt North America does not carry any WMBE designations directly. Aebi Schmidt does strive to work with organizations that do hold certifications. Approximately 6% of the parts we source for production of our equipment are from WMBE or SBE organizations. Attached you will see documentation and a letter of our intent and the some of the suppliers we work with. Aebi Schmidt North America does have dealers that we work with that are WMBE and/or SBE orientated. One such dealer we provide product to for the city of Chicago is Steve's Equipment Services. Attached in the documents is their MBE certification with the city of Chicago.	*
45	What unique attributes does your company, your products, or your services offer to Sourcewell participating entities? What makes your proposed solutions unique in your industry as it applies to Sourcewell participating entities?	We have the ability to offer turnkey truck packages along with a full service team of 11 field technicians to support when necessary. Not many companies in the field of snow and ice are able to offer that to their customers. We also offer service contracts and preventative maintenance audits as add-ons for our customers. Meyer products offers the longest warranty in the industry on their plows. They offer a 5 year manufacturers warranty. This is 3 years longer than any of the competitors in the market. See warranty documents attached in the document section.	*

Table 9A: Warranty

Describe in detail your manufacturer warranty program, including conditions and requirements to qualify, claims procedure, and overall structure. You may upload representative samples of your warranty materials (if applicable) in the document upload section of your response in addition to responding to the questions below.

Line Item	Question	Response *	
46	Do your warranties cover all products, parts, and labor?	The warranty covers all Aebi Schmidt manufactured products. The chassis is covered by the specific manufacturer's warranty. We will help to work with the chassis manufacturer on your claims to ensure all warranty items are taken care of. Our warranty disclosures are included in the document section.	*
47	Do your warranties impose usage restrictions or other limitations that adversely affect coverage?	All of our warranty information including limitation and restrictions are outlined in the documents provided in the response in the document section labeled Warranty. They vary by product category and with the large breadth of products offered it is best to refer to the specific product warranty included.	*
48	Do your warranties cover the expense of technicians' travel time and mileage to perform warranty repairs?	Yes the warranty coverage would cover the technicians travel, time and other expenses if it is necessary for the technician to be onsite for repairs.	*
49	Are there any geographic regions of the United States or Canada (as applicable) for which you cannot provide a certified technician to perform warranty repairs? How will Sourcewell participating entities in these regions be provided service for warranty repair?	We have no regions in the United States or Canada where we are unable provide a technician to perform repairs. We have technicians that work remotely across the United States including Alaska and two located in Canada.	*
50	Will you cover warranty service for items made by other manufacturers that are part of your proposal, or are these warranties issues typically passed on to the original equipment manufacturer?	We will assist the customer with processing the warranty claims, but those warranties are all based on the original manufacturer of the equipment.	*
51	What are your proposed exchange and return programs and policies?	Our manufactured units are custom pieces of equipment and are not eligible for return or exchange. Part returns or exchanges are accepted. The customer is responsible for the freight to return items and a 30% restocking fee unless the part being returned was shipped by error (wrong part) from Aebi Schmidt North America. Our goal is customer satisfaction so we will do our best to work with our customers at all times within reason.	*
52	Describe any service contract options for the items included in your proposal.	Many of our service contracts are tailored to the needs to the customer. We do offer some standard solutions which include machine audits (Vprotect 365) in which we will send out a technician to do a 200 point inspection on the machine prior to winter. The end result is the customer will receive a list of parts needed for repairs and will also receive a list of preventative maintenances that should be done. We will perform those maintenances on a service contract to be negotiated with the customer at that time. We also offer training packages for mechanics and operators and that pricing is included in pricing documents included in the response.	*

Table 10: Payment Terms and Financing Options

Line Item	Question	Response *	
53	Describe your payment terms and accepted payment methods.	Our preferred payment method is electronic funds transfer. We will also accept credit cards with a service fee of 3% on orders under $10,000, check payments and ACH transactions.	*
54	Describe any leasing or financing options available for use by educational or governmental entities.	We offer both financing and leasing options for our customers through the Alliance Funding group. The program is for any transaction from 300,000 to 25 million. Flexible terms ranging from 24 to 96 months repayment of loans or leases for heavy equipment and smaller loans from 5,000 to 250,000 for less expensive items with repayment terms of 3 to 18 months. Brochure included in the documents section. After attending the Sourcewell H2O program and learning about NCL Government Capital we are interested in looking into working with them and their awarded Sourcewell contract.	*
55	Describe any standard transaction documents that you propose to use in connection with an awarded contract (order forms, terms and conditions, service level agreements, etc.). Upload a sample of each (as applicable) in the document upload section of your response.	Standard documents include: Price quotation in approved Sourcewell format with our Sourcewell member number We supply our standard terms and conditions with all quotes. Upon machine delivery we provide all warranty information and contact information of anyone who would be needed to be contacted for support Included in the documents section is our standard terms and conditions documents along with our Insurance documents.	*
56	Do you accept the P-card procurement and payment process? If so, is there any additional cost to Sourcewell participating entities for using this process?	We accept credit cards for any parts orders. Most often our products are beyond the threshold of any credit card or p-card so most often orders are placed via Purchase Order number and paid through an EFT transaction.	*

Table 11: Pricing and Delivery

Provide detailed pricing information in the questions that follow below. Keep in mind that reasonable price and product adjustments can be made during the term of an awarded Contract as described in the RFP, the template Contract, and the Sourcewell Price and Product Change Request Form.

Line Item	Question	Response *	
57	Describe your pricing model (e.g., line-item discounts or product-category discounts). Provide detailed pricing data (including standard or list pricing and the Sourcewell discounted price) on all of the items that you want Sourcewell to consider as part of your RFP response. If applicable, provide a SKU for each item in your proposal. Upload your pricing materials (if applicable) in the document upload section of your response.	All of our pricing provided shows a list price and the Sourcewell member price, which is discounted from the list. Pricing is uploaded in the documents section.	*
58	Quantify the pricing discount represented by the pricing proposal in this response. For example, if the pricing in your response represents a percentage discount from MSRP or list, state the percentage or percentage range.	Monroe Truck Equipment is offering 20% discount off of list price. Swenson Spreader, LLC is offering 10% discount off of list price. Meyer Products, LLC is offering 20% discount on snowplows and 15% discount on spreaders. M-B Companies, Inc. is offering a 10% discount on all products and services offered. As a group Aebi Schmidt North America offers Sourcewell members a 10% discount off of list price for parts and accessories - most of these price lists are very comprehensive so they are not included in the documents.	*
59	Describe any quantity or volume discounts or rebate programs that you offer.	Volume discounts or rebate programs are determined on a case-by-case basis determined from our dealer channel and/or the factory.	*
60	Propose a method of facilitating “sourced” products or related services, which may be referred to as “open market” items or “nonstandard options”. For example, you may supply such items “at cost” or “at cost plus a percentage,” or you may supply a quote for each such request.	Each request for a sourced, open market or nonstandard product will be quoted at the time of each request. The member will be provided with our method of calculating the price through a quote for each request.	*
61	Identify any element of the total cost of acquisition that is NOT included in the pricing submitted with your response. This includes all additional charges associated with a purchase that are not directly identified as freight or shipping charges. For example, list costs for items like pre-delivery inspection, installation, set up, mandatory training, or initial inspection. Identify any parties that impose such costs and their relationship to the Proposer.	Freight is not included in the pricing. Due to the extreme uncertainty of the market and volatile cost freight will be calculated at delivery of the product at current cost. We contract with many freight providers and negotiate the absolute best terms that we can to provide our customers with the lowest cost freight we have available.	*
62	If freight, delivery, or shipping is an additional cost to the Sourcewell participating entity, describe in detail the complete freight, shipping, and delivery program.	Small equipment is shipped via LTL by common carriers. Truck mounted equipment is shipped via drive-away service to all points in the continental U.S. Hauled service is also available for those customers who require an alternative to driving the unit. A customer can pick up and drive away as an option as well.	*
63	Specifically describe freight, shipping, and delivery terms or programs available for Alaska, Hawaii, Canada, or any offshore delivery.	Alaska, Hawaii, Canada and the U.S. Islands orders will be shipped based on the best delivery option to the area and the type of unit. Orders can be shipped via boat or even air if required.	*
64	Describe any unique distribution and/or delivery methods or options offered in your proposal.	We offer the ability for our customers to pick up their units from the factory and have factory training while on site at the plant.	*

Table 12: Pricing Offered

Line Item	The Pricing Offered in this Proposal is: *	Comments
65	c. better than the Proposer typically offers to GPOs, cooperative procurement organizations, or state purchasing departments.	This is our most complete offering of products with our most competitive pricing.

Table 13: Audit and Administrative Fee

Line Item	Question	Response *	
66	Specifically describe any self-audit process or program that you plan to employ to verify compliance with your proposed Contract with Sourcewell. This process includes ensuring that Sourcewell participating entities obtain the proper pricing, that the Vendor reports all sales under the Contract each quarter, and that the Vendor remits the proper administrative fee to Sourcewell. Provide sufficient detail to support your ability to report quarterly sales to Sourcewell as described in the Contract template.	The Accounting and IT teams will be responsible for establishing, using, auditing and maintaining the procedure for recording sales to Sourcewell members in order to ensure our ability to report member sales to Sourcewell quarterly and submit the appropriate fee. The management team will receive monthly reports that will identify Sourcewell member orders, pricing, invoicing, and administrative fee to be submitted to Sourcewell. Additionally, the Audit team at the Aebi Schmidt Group will be advised of the contract requirements so that they can periodically audit for adherence to the contract, including pricing, sales reports, administrative fee submittals, etc. We have documented price lists that will be shared with our dealers and sales people, which will be input into our financial system for orders labeled as Sourcewell with the contract number attached. Each quarter our controllers will roll up all of the sales and ensure the proper administrative fees are sent from our organization to Sourcewell.	*
67	If you are awarded a contract, provide a few examples of internal metrics that will be tracked to measure whether you are having success with the contract.	Aebi Schmidt North America utilizes the A3 project management process when defining sales targets for our business units, sales team members. Within each A3, targets for sales budgets and growth are broken down. We have created milestones (KPIs) for business units and individual regional territories. One milestone specific to Sourcewell will be created to track progress, usage, understanding, etc. Once awarded each business will be provided a sales growth target for "Sourcewell sales." Meetings are held monthly to track progress of these goals. All opportunities in the CRM system will be labeled as "Sourcewell" opportunities and that data will be tracked. We will develop KPIs for these opportunities to ensure progress is being made with these opportunities and they are trending in the direction of a sale. Metrics will be tracked, baselines for closing percentage are established and expectations will be set. Each salesperson in our organization will have a target established for sales created using Sourcewell.	*
68	Identify a proposed administrative fee that you will pay to Sourcewell for facilitating, managing, and promoting the Sourcewell Contract in the event that you are awarded a Contract. This fee is typically calculated as a percentage of Vendor's sales under the Contract or as a per-unit fee; it is not a line-item addition to the Member's cost of goods. (See the RFP and template Contract for additional details.)	Aebi Schmidt North America proposes to pay Sourcwell a 2% fee on all sales to Sourcewell members.	*

Table 14A: Depth and Breadth of Offered Equipment Products and Services

Line Item	Question	Response *	
69	Provide a detailed description of the equipment, products, and services that you are offering in your proposal.	We are offering our full range of products available through our Swenson, Meyer, Monroe and European factories that fit in the snow and ice category. We have products that fit every application of snow and ice removal in the industry. We are also offering our full line of OEM parts, third party parts and service programs. We are also offering our customers full turnkey snow and ice truck packages to allow the customer to have a one stop shop for their entire truck.	*
70	Within this RFP category there may be subcategories of solutions. List subcategory titles that best describe your products and services.	All of the products we are proposing fall within the scope of the RFP. We don't have any subcategories at this time.	*

Table 14B: Depth and Breadth of Offered Equipment Products and Services

Indicate below if the listed types or classes of equipment, products, and services are offered within your proposal. Provide additional comments in the text box provided, as necessary.

Line Item	Category or Type	Offered *	Comments	
71	Plows, blades, wings, blowers, and brooms	(•) Yes ( ) No	We offer many types	*
72	Spreader or sprayer systems for the application of de-icing or anti-icing solids or liquids and snow melters	(•) Yes ( ) No	We offer may types	*
73	Dump bodies, specialty equipment, and air or hydraulic systems, related to the upfitting or modification primarily for snow and ice handling; and,	(•) Yes ( ) No	We offer many types	*
74	A complementary offering of parts, supplies, and accessories, related to the upkeep, repair, or maintenance of their offering of equipment as described in 71-73 above	(•) Yes ( ) No	We offer parts and accessories along with service contracts	*

Table 15: Exceptions to Terms, Conditions, or Specifications Form

Line Item 75. **NOTICE**: To identify any exception, or to request any modification, to the Sourcewell template Contract terms, conditions, or specifications, a Proposer must submit the exception or requested modification on the **Exceptions to Terms, Conditions, or Specifications Form** immediately below. The contract section, the specific text addressed by the exception or requested modification, and the proposed modification must be identified in detail. Proposer's exceptions and proposed modifications are subject to review and approval of Sourcewell and will not automatically be included in the contract.

Contract Section	Term, Condition, or Specification	Exception or Proposed Modification
N/A	N/A	N/A

Documents

Ensure your submission document(s) conforms to the following:

1. Documents in PDF format are preferred. Documents in Word, Excel, or compatible formats may also be provided.

2. Documents should NOT have a security password, as Sourcewell may not be able to open the file. It is your sole responsibility to ensure that the uploaded document(s) are not either defective, corrupted or blank and that the documents can be opened and viewed by Sourcewell.

3. Sourcewell may reject any response where any document(s) cannot be opened and viewed by Sourcewell.

4. If you need to upload more than one (1) document for a single item, you should combine the documents into one zipped file. If the zipped file contains more than one (1) document, ensure each document is named, in relation to the submission format item responding to. For example, if responding to the Marketing Plan category save the document as “Marketing Plan.”

- Pricing - Pricing folder.zip - Tuesday June 21, 2022 20:12:56
- Financial Strength and Stability - Company Information.zip - Tuesday June 21, 2022 20:05:44
- Marketing Plan/Samples - Marketing.zip - Tuesday June 21, 2022 20:05:01
- WMBE/MBE/SBE or Related Certificates - MBE.zip - Tuesday June 21, 2022 20:13:24
- Warranty Information - Warranty Information.zip - Tuesday June 21, 2022 20:05:31
- Standard Transaction Document Samples - Standard Documents.zip - Wednesday June 22, 2022 10:32:28
- Upload Additional Document - Sales Organization.zip - Wednesday June 22, 2022 08:35:10

Addenda, Terms and Conditions

PROPOSER AFFIDAVIT AND ASSURANCE OF COMPLIANCE

I certify that I am the authorized representative of the Proposer submitting the foregoing Proposal with the legal authority to bind the Proposer to this Affidavit and Assurance of Compliance:

1. The Proposer is submitting this Proposal under its full and complete legal name, and the Proposer legally exists in good standing in the jurisdiction of its residence.

2. The Proposer warrants that the information provided in this Proposal is true, correct, and reliable for purposes of evaluation for contract award.

3. The Proposer, including any person assisting with the creation of this Proposal, has arrived at this Proposal independently and the Proposal has been created without colluding with any other person, company, or parties that have or will submit a proposal under this solicitation; and the Proposal has in all respects been created fairly without any fraud or dishonesty. The Proposer has not directly or indirectly entered into any agreement or arrangement with any person or business in an effort to influence any part of this solicitation or operations of a resulting contract; and the Proposer has not taken any action in restraint of free trade or competitiveness in connection with this solicitation. Additionally, if Proposer has worked with a consultant on the Proposal, the consultant (an individual or a company) has not assisted any other entity that has submitted or will submit a proposal for this solicitation.

4. To the best of its knowledge and belief, and except as otherwise disclosed in the Proposal, there are no relevant facts or circumstances which could give rise to an organizational conflict of interest. An organizational conflict of interest exists when a vendor has an unfair competitive advantage or the vendor's objectivity in performing the contract is, or might be, impaired.

5. The contents of the Proposal have not been communicated by the Proposer or its employees or agents to any person not an employee or legally authorized agent of the Proposer and will not be communicated to any such persons prior to Due Date of this solicitation.

6. If awarded a contract, the Proposer will provide to Sourcewell Participating Entities the equipment, products, and services in accordance with the terms, conditions, and scope of a resulting contract.

7. The Proposer possesses, or will possess before delivering any equipment, products, or services, all applicable licenses or certifications necessary to deliver such equipment, products, or services under any resulting contract.

8. The Proposer agrees to deliver equipment, products, and services through valid contracts, purchase orders, or means that are acceptable to Sourcewell Members. Unless otherwise agreed to, the Proposer must provide only new and first-quality products and related services to Sourcewell Members under an awarded Contract.

9. The Proposer will comply with all applicable provisions of federal, state, and local laws, regulations, rules, and orders.

10. The Proposer understands that Sourcewell will reject RFP proposals that are marked "confidential" (or "nonpublic," etc.), either substantially or in their entirety. Under Minnesota Statutes Section 13.591, subdivision 4, all proposals are considered nonpublic data until the evaluation is complete and a Contract is awarded. At that point, proposals become public data. Minnesota Statutes Section 13.37 permits only certain narrowly defined data to be considered a "trade secret," and thus nonpublic data under Minnesota's Data Practices Act.

11. Proposer its employees, agents, and subcontractors are not:
    1. Included on the "Specially Designated Nationals and Blocked Persons" list maintained by the Office of Foreign Assets Control of the United States Department of the Treasury found at: https://www.treasury.gov/ofac/downloads/sdnlist.pdf;

    2. Included on the government-wide exclusions lists in the United States System for Award Management found at: https://sam.gov/SAM/; or

    3. Presently debarred, suspended, proposed for debarment, declared ineligible, or voluntarily excluded from programs operated

by the State of Minnesota; the United States federal government or the Canadian government, as applicable; or any Participating Entity. Vendor certifies and warrants that neither it nor its principals have been convicted of a criminal offense related to the subject matter of this solicitation.

☑ By checking this box I acknowledge that I am bound by the terms of the Proposer's Affidavit, have the legal authority to submit this Proposal on behalf of the Proposer, and that this electronic acknowledgment has the same legal effect, validity, and enforceability as if I had hand signed the Proposal. This signature will not be denied such legal effect, validity, or enforceability solely because an electronic signature or electronic record was used in its formation. - Jason Bartuseck, Vice President of After Sales - North America, Aebi Schmidt North America

The Proposer declares that there is an actual or potential Conflict of Interest relating to the preparation of its submission, and/or the Proposer foresees an actual or potential Conflict of Interest in performing the contractual obligations contemplated in the bid.

○ **Yes** ◉ **No**

The Bidder acknowledges and agrees that the addendum/addenda below form part of the Bid Document.

Check the box in the column "**I have reviewed this addendum**" below to acknowledge each of the addenda.

File Name	I have reviewed the below addendum and attachments (if applicable)	Pages
Addendum_3_Snow_Ice_Handling_Equipment_RFP_062222 Thu May 26 2022 01:38 PM	☑	2
Addendum_2_Snow_Ice_Handling_Equipment_RFP_062222 Fri May 20 2022 02:03 PM	☑	1
Addendum_1_Snow_Ice_Handling_Equipment_RFP_062222 Tue May 3 2022 03:55 PM	☑	1

DocuSign Envelope ID: B6C10BFF-E957-482C-B43E-B5CCDD5E784E

AMENDMENT #1
TO
CONTRACT # 062222-AEB

THIS AMENDMENT is effective upon the date of the last signature below and is by and between **Sourcewell** and **ASH North America, Inc., dba Aebi Schmidt North America** (Supplier).

Sourcewell awarded the Supplier a contract to provide Snow and Ice Handling Equipment, Supplies, and Accessories to Sourcewell and its Participating Entities from August 22, 2022, through August 15, 2026 (Contract).

NOW, THEREFORE, the parties wish to amend the Contract as follows:

The supplier's response to Proposal line item 58 under "Table 11: Pricing and Delivery" paragraph three is deleted in its entirety as it relates to Meyer Products and replaced with the following paragraph response: Meyer Products, LLC is offering a 10% discount on snowplows and related parts and a 17% discount on spreaders.

Except as amended above, the Contract remains in full force and effect.

Sourcewell

By: DocuSigned by: Jeremy Schwartz C0FD2A139D06489...

Jeremy Schwartz, Chief Procurement Officer

Date: 6/4/2024 | 9:05 PM CDT

ASH North America, Inc.,
dba Aebi Schmidt North America

By: DocuSigned by: Jason Bartuseck 28BF3B1B1E174AA...

Jason Bartuseck

Title: General Manager

Date: 6/4/2024 | 3:43 PM CDT

MEMORANDUM

To: Village Manager Cara Pavlicek
From: Director of Public Works Kelly Hamill
Date: 2026-07-14
Subject: A Resolution Approving an Agreement for Holiday Lighting and Winter Display Installation Services with B&B Holiday Decorating, LLC of Wheeling, Illinois

Overview
The Village of Northbrook installs holiday lighting throughout the Central Business District and at Village Hall with "holiday lighting" throughout the year. After three years of use, the holiday lighting installed in 2023 needs to be replaced. The Village also hosts a winter display at the Village Green fountain as part of the Illuminate Northbrook event, which includes a design element celebrating the Village's 125th anniversary.

Fiscal Impact
The adopted FY27 Budget contains funds for holiday lighting and winter display installation services ("Services") in General Fund Account No. 11-4100-554-00 (Other Professional Services).

The Holiday Lighting and Winter Display Installation Request for Proposals (RFP) identified three (3) years for the initial term of the agreement. Staff recommends entering into a three-year contract for the Services with B&B Holiday Decorating, LLC of Wheeling, Illinois, in the total not to exceed amount of $198,919. A breakdown of the costs for the first year of the 3-year term is in Table 1 below. The total costs per year for the initial 3-year term is in Table 2 below.

Table 1. Year 1 Costs (FY27) of Initial 3-Year Term

Account	Account No.	Budget	Available	Requested	Remaining	Within Budget
General Fund - Other Professional Services	11-4100-554-00	$395,995	$54,201	$121,838	($67,637)	No

Table 2. Total Costs Per Fiscal Year for the 3-Year Term

FY2027	FY2028	FY2029	3-Year Total Cost
$121,838	$27,240	$49,841	$198,919

A budget amendment totaling $67,637 is required in FY27 Q1 to fund the under-budgeted Holiday Lighting and Winter Display Installation Services. This item was inadvertently omitted during the development of the annual budget; however, the funding is necessary to install and maintain the lights and Holiday display. The $67,637 is expected to be reallocated from existing Public Works general fund accounts, resulting in a net-zero impact on the overall budget.

Recommendation
Approval.

Strategic Priority
Infrastructure. Maintain a consistent high-quality of life through capital investment, continued focus on sustainability, and facilities that meet operational needs.

Background
The Village utilizes contractual holiday lighting and decorating services to install lighting on parkway trees throughout the Central Business District (CBD). These lights are used year-round, operating during evening hours for much of the year and throughout the holiday season (approximately November 15 – January 20). The Village also uses the contractual services to install an annual winter-themed display at the Village Green Fountain, which serves as a focal point of the Village's annual Illuminate Northbrook event.

In preparation for the 2026 agreement, Public Works staff developed a joint Request for Proposals (RFP) for holiday lighting and winter display installation services ("Services") in coordination with the Northbrook Park District ("Park District"). As specified in the RFP, the Village and the Park District intend to award separate agreements for their respective scopes of work. The Village's scope of work included lighting 104 trees within the CBD and at Village Hall using the existing lighting style, as well as the design and installation of an annual winter display at the Village Green Fountain. For the first year of the agreement, the RFP also included a design element within the winter display to recognize and celebrate the Village's 125th anniversary in November.

The Park District's scope of work included installation of a winter display featuring a 40-foot light tunnel, up lighting of five trees, and decoration of 15 light poles within Village Green. This cost is not not part of this approval and is the responsibility of the Park District.

On May 6, 2026, Public Works staff issued a RFP for the Services, sent it to four (4) vendors specializing in the work and published it on the Village's website. A pre-proposal meeting was held on May 14 and three (3) vendors attended. On May 27, 2026, the Village received three (3) proposals. After review, staff determined B&B Holiday Decorating, LLC of Wheeling, Illinois ("Vendor") submitted the lowest, most responsive proposal. A summary of the proposals is included in Table 3.

The proposed agreement term extends from July 14, 2026 through April 30, 2029 and provides for three (3) years of holiday lighting and winter display installations. As the holiday lighting will be newly installed during Year 1 of the agreement, the Year 1 costs include the purchase and installation of the holiday lights, the costs for Years 2 and 3 reflect the planned maintenance of the lighting, and the Year 3 costs also include removal of the holiday lights at the conclusion of the initial term agreement.

Table 3. Summary of Pricing for Holiday Lighting and Winter Display Installation Proposals

Vendor	FY2027	FY2028	FY2029	3-Year Total Cost
B&B Holiday Decorating, LLC.	$121,838	$27,240	$49,841	$198,919
Holiday Outdoor Decor	$204,850	$12,100	$77,100	$294,050
Christmas Decor	$293,690	$24,600	$157,600	$475,890

The Vendor has provided holiday lighting and winter display installation services for the Village in the past and the Village has been satisfied with their performance. Staff recommends entering into an initial agreement with the Vendor for the period of July 14, 2026, through April 30, 2029 in the total not to exceed amount of $198,919. During development of the FY27 budget, funding for holiday lighting services was based on the costs of the prior agreement. Since execution of the 2023 agreement, the total cumulative diameter at breast height (DBH) requiring holiday lighting has increased due to both the addition of trees to the scope of services and the continued growth of existing trees. As a result, the costs associated with the initial term exceed the amount included in the adopted FY27 budget.

The agreement also includes an option for up to one (1) additional one-year renewal upon mutual consent, with the renewal term running concurrently with the Village's fiscal year (May 1 through April 30). Staff will be present at the Village Board meeting to address any questions that may arise.

A Resolution Approving an Agreement for Holiday Lighting and Winter Display Installation Services with B&B Holiday Decorating, LLC of Wheeling, Illinois
Exhibit A - Holiday Lighting & Winter Display Installation Agreement with B&B Holiday Decorating

Resolution 2026- _____

BE IT RESOLVED by the President and Board of Trustees of the Village of Northbrook, County of Cook and State of Illinois, THAT:

A Resolution Approving an Agreement for Holiday Lighting and Winter Display Installation Services with B&B Holiday Decorating, LLC of Wheeling, Illinois

is hereby adopted, as follows:

Section 1. Recitals.

The Village of Northbrook utilizes contractual holiday lighting and decorating services to install lighting on parkway trees throughout the Central Business District (CBD). These lights are used year-round, operating during evening hours for much of the year and throughout the holiday season (approximately November 15 – January 20). The Village also uses the contractual services to install an annual winter-themed display at the Village Green Fountain, which serves as a focal point of the Village's annual Illuminate Northbrook event.

After three years of use, the holiday lighting installed in 2023 needs to be replaced. In preparation for the 2026 agreement, Public Works staff developed a joint Request for Proposals (RFP) for holiday lighting and winter display installation services ("***Services***") in coordination with the Northbrook Park District ("***Park District***"). For the first year of the contract, the RFP also included a design element within the winter display to recognize and celebrate the Village's 125th anniversary in November 2026. As specified in the RFP, the Village and the Park District intend to award separate agreements for their respective scopes of work.

On May 6, 2026, Public Works staff issued the RFP for the Services, sent it to four vendors specializing in the work and published it on the Village's website. A pre-proposal meeting was held on May 14 and three vendors attended. On May 27, 2026, the Village received three proposals. After review, staff determined B&B Holiday Decorating, LLC of Wheeling, Illinois ("***Vendor***") submitted the lowest, most responsive proposal. The Vendor has provided holiday lighting and winter display installation services for the Village in the past and the Village has been satisfied with their performance.

The adopted FY2027 Budget contains funds for the Services in General Fund Account No. 11-4100-554-00 (Other Professional Services). Funds will be drawn from this account for the Services at the prices outlined in ***Exhibit A***.

Based on these factors, staff recommends entering into an agreement with the Vendor for the Services, with the initial term period of July 14, 2026 through April 30, 2029, in the total not to exceed amount of $198,919 ("***Agreement***"). The Agreement also includes an option for up to one additional one-year renewal upon mutual consent, with the renewal term running concurrently with the Village's fiscal year (May 1 through April 30). The President and the Board of Trustees intend to retain funding in FY2028 and FY2029 Budgets as approved for the term of the Agreement.

The President and the Board of Trustees have considered the Agreement and determined that it is in the best interests of the Village and the public to enter into the Agreement with the Vendor.

Section 2. Approval of Agreement.

The Agreement shall be, and is hereby, approved in a form acceptable to the Village Attorney and the Village Manager.

Section 3. Authorization to Execute Agreement.

The Village Manager and Village Clerk shall be, and are hereby, authorized and directed to execute and seal, on behalf of the Village, the Agreement.

Section 4. Authorization of Expenditures.

The Village Manager is hereby authorized and directed to execute such documents and make such payments as are necessary to procure the Services from the Vendor at the prices outlined in ***Exhibit A***.

Approved:

RESULT:
MOVER:
SECONDER:
AYES:
NAYES:
ABSTAIN:
ABSENT:

ATTEST:

_____
Village President

_____
Village Clerk

VILLAGE OF NORTHBROOK

REQUEST FOR PROPOSALS

OWNER:
Village of Northbrook
1225 Cedar Lane
Northbrook, Illinois 60062

PROPOSAL SUBMISSION INFORMATION:

Date of Request for Proposals ("***RFP***") Issuance:
Wednesday, May 6, 2026 – 11:00 a.m.

Pre-Proposal Meeting:
Thursday, May 14, 2026 – 10:00 a.m.

Proposal Submittal Deadline:
Wednesday, May 27, 2026 – 10:00 a.m.

Owner, who will be working collaboratively with the Northbrook Park District ("***Park District***"), will receive sealed proposals for the Work generally described as follows:

Design, installation, maintenance, and removal of holiday lights and winter display in the Central Business District of the Village of Northbrook, as further set forth and described in "ATTACHMENT A – SPECIFICATIONS," attached to this RFP.

TO BE SUBMITTED TO: **Village of Northbrook Department of Public Works, 655 Huehl Road, Northbrook, Illinois 60062, attention Jean Paul Soens, BEFORE 10:00 A.M., May 27, 2026.**

INSTRUCTIONS TO PROPOSERS

Preparation of Proposals

All proposals for the Work shall be made only on the blank Contract/Proposal form attached to this RFP and shall be complete with a price for each and every item named in the Schedule of Prices section of the Contract/Proposal form. All proposals must be signed by an authorized representative/official. Proposals that contain omissions, erasures, alterations, or additions not called for, conditional or alternate proposals unless called for, or that contain irregularities of any kind may be rejected. Proposals must include the attached reference form with at least three (3) references. Proposers with extensive municipal experience will be preferred.

Clarifications

Owner reserves the right to make clarifications, corrections, or changes in this RFP at any time prior to the time proposals are opened. All proposers or prospective proposers will be informed of said clarifications, corrections, or changes. If there are questions regarding the specifications, please contact Jean Paul Soens, at jeanpaul.soens@northbrook.il.us. All questions must be submitted in writing. All email communications must include the subject line "Holiday Lighting RFP". Questions and inquiries regarding this RFP are due Friday, May 15, 2026 at 3 P.M. An addendum addressing all questions and inquiries will be issued and posted to the Village of Northbrook's website (https://www.northbrook.il.us/1019/Bids-and-Proposals) by 3 P.M. on Tuesday, May 19, 2026. All addendums must be acknowledged as indicated on page 5 of this document for responses to this RFP to be considered complete. Any other information of any kind from any other source shall not be considered official, and proposers relying on other information do so at their own risk.

Delivery of Proposals

Each proposal shall be submitted in a sealed envelope plainly marked with the proposer's full legal name and address and include the following wording clearly marked on the outside of the envelope:

Village of Northbrook – Proposal for Holiday Lighting

Responses received by the designated contact after 10:00 a.m., Central Time, Wednesday, May 27, 2026 will not be accepted and will be returned to the sender unopened. All proposals must be delivered to and received by Owner no later than the due date regardless of postmark date. Proposals submitted via facsimile or e-mail will not be accepted. Proposals must be submitted in the manner described in this RFP.

Each response shall be addressed and delivered to the place and before the time set forth above. Proposals may be delivered by mail or in person. Proposals received after the time specified above will be returned unopened. Each proposer assumes responsibility for timely submission of its proposal.

Follow-up discussions may be conducted with several firm(s) to resolve any questions, finalize the scope of work and agreement on final not-to-exceed costs as a means to recommend final selection to the Board of Trustees. Owner also reserves the right to negotiate with potential consultants so that Owner's best interests are served.

Freedom of Information Act

All information submitted to Owner in response to this RFP shall be deemed a public record and will be subject to disclosure under the Illinois Freedom of Information Act (5 ILCS 140 et seq.) subsequent to the award of the contract. Proposers are advised that Section 7(1)(g) of that Act exempts the following from disclosure:

> Trade secrets and commercial or financial information obtained from a person or business where the trade secrets or commercial or financial information are furnished under a claim that they are proprietary, privileged or confidential, and that disclosure of the trade secrets or commercial or financial information would cause competitive harm to the person or business, and only insofar as the claim directly applies to the records requested.

Proposers desiring to have portions of their proposals considered exempt are advised to mark these portions accordingly.

Insurance

The successful proposer will be required to furnish certificates and policies of insurance as required by Section 4.B of the contract, upon award of the contract. Each proposer's proposal must be accompanied by a letter from proposer's insurance carrier or its agent certifying that said insurer has read the requirements set forth in the contract and will issue the required certificates and policies of insurance upon award of the contract to Proposer.

PRE-PROPOSAL MEETING

All proposers are strongly encouraged to attend a pre-proposal meeting walk-though on **Thursday, May 14, 2026 at 10:00 a.m.** at the Village of Northbrook **Village Green Park (fountain at intersection of Shermer Rd and Meadow Rd)**, located at approximately 1810 Walters Avenue, Northbrook, IL 60062. Representatives of the Owner and Park District will be present to discuss the Work and answer questions. Owner reserves the right to reject any proposals submitted by proposers who fail to attend this pre-proposal meeting.

Opening of Proposals

Proposals will be publicly opened at 10:00 a.m., Central Time, Wednesday, May 27, at the Village of Northbrook Public Work Center, located at 655 Huehl Road, Northbrook, IL 60062, and read at the time and place specified above. Proposers, their authorized agents, and interested parties are invited to be present.

Withdrawal of Proposals

No proposal shall be withdrawn for a period of 90 days after the opening of any proposal.

Rejection of Proposals

Proposals that are not submitted on the Contract/Proposal form or that are not prepared in accordance with these Instructions to Proposers may be rejected. If not rejected, Owner may demand correction of any deficiency and accept the deficiently prepared proposal upon compliance with these Instructions to Proposers.

Proposer Qualifications and Evaluation Criteria

Proposers must be qualified contractors and demonstrate the capability to provide services required in accordance with the proposal specifications. Proposals shall be evaluated as follows (not listed in order of priority):

1. Sample Winter Display Submittals & Recommendations
2. Design and Visual Impact
3. Available Display Resources
4. Pricing
5. References and Experience
6. Customer Service

Owner reserves the right to choose the overall best proposer according to Owner's criteria. Owner, and its designated representatives, shall be the sole judge of its own best interest, the proposal, and the resulting negotiated contract. Owner's decision will be final.

Interviews

The Owner may request interviews with proposers who meet the preliminary evaluation criteria.

Interviews will be scheduled on the following dates and times:

- Monday, June 8 at 8:00 AM – 9:00 AM
- Monday, June 8 at 10:30 AM – 11:30 AM
- Tuesday, June 9 at 8:00 AM – 9:00 AM
- Tuesday, June 9 at 10:00 AM – 11:30 AM

Acceptance of Proposals

Proposals submitted are offers only and the decision to accept or reject is a function of quality, reliability, capability, reputation, and expertise of the proposers. The final award of a contract for the Work is in the sole discretion of the Village Board of Trustees. Issuance of this RFP does not obligate Owner to pay any costs incurred by a proposer in its submission of a proposal or making any necessary studies or designs for the preparation of that proposal, or for procuring or contracting for the services to be furnished under this RFP.

Owner reserves the right to accept the proposal that is, in its judgment, the best and most favorable to the interests of Owner and to the public; to reject the low price proposal; to accept any item of any proposal; to reject any and all proposals; and to waive irregularities and informalities in any proposal submitted or in the

request for proposal process; provided, however, the waiver of any prior defect or informality shall not be considered a waiver of any future or similar defect or informality. Proposers should not rely upon, or anticipate, such waivers in submitting their proposal.

Upon acceptance of the successful proposer's proposal by Owner, the successful proposer's proposal, together with Owner's notification of acceptance in the form attached to this RFP, shall become the contract for the Work. Final acceptance and approval of the contract will be at the discretion of the Village Board of Trustees.

DATED this 6th day of May, 2026

VILLAGE OF NORTHBROOK

By: Jean Paul Soens
Management Analyst

VILLAGE OF NORTHBROOK

CONTRACT/PROPOSAL FOR THE INSTALLATION, MAINTENANCE, AND REMOVAL OF HOLIDAY LIGHTING AND DESIGN OF WINTER DISPLAY IN THE CENTRAL BUSINESS DISTRICT AND VILLAGE GREEN PARK

Full Name of Proposer B&B Holiday Decorating, LLC ("Proposer" or "Vendor")

Principal Office Address 2048 Foster Ave. Wheeling, IL 60090

Local Office Address 2048 Foster Ave. Wheeling, IL 60090

Contact Person Patrick Fitzgibbons E-Mail patrick@bbservicesinc.com

Phone 847-825-1657 (Main) 224-245-0025 (Direct) Fax _____

TO: Village of Northbrook
Department of Public Works
655 Huehl Road
Northbrook, Illinois 60062
Attention: Jean Paul Soens, Management Analyst

Proposer warrants and represents that Proposer has carefully examined the Work Site described below and its environs and has reviewed and understood all documents included, referred to, or mentioned in this bound set of documents, including Addenda Nos. 1, 2 [if none, write "NONE"], which are securely stapled to the end of this Contract/Proposal.

1. Work Proposal

A. Contract and Work: If this Contract/Proposal is accepted, Proposer proposes, and agrees, that Proposer shall, at its sole cost and expense, provide, perform, and complete, in the manner specified and described, and upon the terms and conditions set forth, in this Contract/Proposal and Owner's written notification of acceptance in the form included in this bound set of documents, all of the following, all of which is herein referred to as the "Work":

1. Labor, Equipment, Materials and Supplies: Provide, perform, and complete, in the manner specified and described in this Contract/Proposal and Specifications (Attachment A, C, and D), all necessary work, labor, services, transportation, equipment, materials, supplies, information, data, and other means and items necessary for the installation, maintenance, and removal of holiday lighting and design of winter display ("Services") in the Village of Northbrook Central Business District (CBD) and Village Green Park (the "Work Site").

2. Permits: Procure and furnish all permits, licenses, and other governmental approvals and authorizations necessary in connection therewith;

3. Bonds and Insurance: Procure and furnish all bonds and all insurance certificates specified in this Contract/Proposal;

4. Taxes: Pay all applicable federal, state, and local taxes;

5. Miscellaneous: Do all other things required of Proposer by this Contract/Proposal; and

6. Quality: Provide, perform, and complete all of the foregoing in a proper and workmanlike manner, consistent with highest standards of professional and construction practices, in full compliance with, and as required by or pursuant, to this Contract/Proposal, and with the greatest economy, efficiency, and expedition consistent therewith, with only new, undamaged, and first quality equipment, materials, and supplies.

B. Performance Standards: If this Contract/Proposal is accepted, Proposer proposes, and agrees, that all Work shall be fully provided, performed, and completed in accordance with the specifications attached hereto and by this reference made a part of this Contract/Proposal.

C. Responsibility for Damage or Loss: If this Contract/Proposal is accepted, Proposer proposes, and agrees, that Proposer shall be responsible and liable for, and shall promptly and without charge to Owner repair or replace, damage done to, and any loss or injury suffered by, Owner, the Work, the Work Site, or other property or persons as a result of the Work.

D. Inspection/Testing/Rejection: Owner shall have the right to inspect all or any part of the Work and to reject all or any part of the Work that is, in Owner's judgment, defective or damaged or that in any way fails to conform strictly to the requirements of this Contract/Proposal and Owner, without limiting its other rights or remedies, may require correction or replacement at Proposer's cost, perform or have performed all Work necessary to complete or correct all or any part of the Work that is defective, damaged, or nonconforming and charge Proposer with any excess cost incurred thereby, or cancel all or any part of any order or this Contract/Proposal. Work so rejected may be returned or held at Proposer's expense and risk.

2. Contract Price Proposal

If this Contract/Proposal is accepted, Proposer proposes, and agrees, that Proposer shall take in full payment for all Work and other matters set forth under Section 1 above, including overhead and profit; taxes, contributions, and premiums; and compensation to all subcontractors and suppliers, the compensation set forth below.

A. Schedule of Prices: For providing, performing, and completing all Work, the sum of products resulting from adding the total cost for each item as set forth in the Schedule of Prices of Attachment B.

B. Basis for Determining Prices: It is expressly understood and agreed that:

1. All prices stated in the Schedule of Prices are firm and shall not be subject to escalation or change;

2. Owner is not subject to state or local sales, use, and excise taxes, that no such taxes are included in the Schedule of Prices, and that all claim or right to claim any additional compensation by reason of the payment of any such tax is hereby waived and released; and

3. All other applicable federal, state, and local taxes of every kind and nature applicable to the Work are included in the Schedule of Prices; and

4. The approximate quantities set forth in the Schedule of Prices for each Item are Owner's estimate only, that Owner reserve the right to increase or decrease such quantities, the total Contract Price to be paid shall be based upon the final quantity determined by Village and the actual quantity that complies with this Contract/Proposal and that are accepted by Village, and that all claim or right to dispute or complain of any such estimated quantity, or to assert that there was any misunderstanding in regard to the nature or amount of any Unit Price Item to be provided or performed, is hereby waived and released.

5. Proposer has thoroughly examined this Contract/Proposal and has thoroughly inspected the Work Site, prior to submission of its bid.

C. Time of Payment: It is expressly understood and agreed that all payments shall be made in accordance with the following schedule:

The Proposer shall submit to Owner monthly a written request for payment based on the amount of Work completed and services provided since the previous request for payment. Requests for payment must be submitted no later than the first day of each month for consideration and approval of payment by Owner at the Board of Trustee meetings normally held on the second and fourth Tuesday of each month. Each request for payment shall include a description of all work completed, copies of all approved service work orders, required copies of certified payrolls (if applicable), waivers and all other required attachments. Improper or incomplete requests for payment will not be submitted to Owner's Board of Trustees for payment until all disputes have been resolved or removed from the request for payment.

All payments may be subject to deduction or set off by reason of any failure of Proposer to perform under this Contract/Proposal. Each payment shall include Proposer's certification of the value of, and partial or final waivers of lien covering, all Work for which payment is then requested and Proposer's certification that all prior payments have been properly applied to the payment or reimbursement of the costs with respect to which they were paid.

3. Contract Time Proposal

A. If this Contract/Proposal is accepted, Proposer proposes, and agrees, that Proposer shall prepare to commence the Work within the timeframe specified in Attachment A provided Proposer shall have furnished to Owner all applicable bonds and and/or Letters of Credit and all certificates and policies of insurance specified in this Contract/Proposal (the "Commencement Date"). If this Contract/Proposal is accepted, Proposer proposes, and agrees, that Proposer shall perform the Work diligently and continuously in accordance with the schedule approved pursuant to the Specifications. The initial term of this Contract/Proposal shall be from Village Board award and execution by the Village Manager through April 30, 2029.

B. Upon satisfactory completion of the Work during any term of this agreement, the Village may notify Proposer that this agreement shall be extended for additional renewal terms pursuant to prices established according to Attachment A – Specifications. Such notice shall be given at least 60 days prior to the expiration of the then-current term, and Proposer shall notify Owner of the proposed revised Schedule of Prices within 15 days after such notice is given. If Owner approves of the revised Schedule of Prices, the agreement shall be renewed by the parties by written agreement. This agreement may be renewed up to one (1) additional one-year term following the initial term. Future terms will run concurrent with the Village's fiscal year (May 1 – April 30).

4. Financial Assurance

A. Bonds: No.

B. Insurance: If this Contract/Proposal is accepted and for each year in which this Contract/Proposal is renewed, Proposer proposes, and agrees, that Proposer shall provide certificates of insurance evidencing the minimum insurance coverage and limits set forth below within 10 days following Owner's acceptance, or the execution of any renewal, of this Contract/Proposal. Such policies shall be in form, and from companies, acceptable to Owner. The insurance coverage and limits set forth below shall be deemed to be minimum coverage and limits and shall not be construed in any way as a limitation on Proposer's duty to carry adequate insurance or on Proposer's liability for losses or damages under this Contract/Proposal. The minimum insurance coverage and limits that shall be maintained at all times while providing, performing, or completing the Work are as follows:

1. Workers' Compensation and Employer's Liability

Limits shall not be less than:

Worker's Compensation: Statutory
Employer's Liability: $500,000 ea. Accident injury
$500,000 ea. Employee disease
$500,000 disease-policy
Such insurance shall evidence that coverage applies to the State of Illinois.

2. Comprehensive Motor Vehicle Liability

Limits for vehicles owned, non-owned or rented shall not be less than:
$1,000,000 Bodily Injury and Property Damage Combined Single Limit

3. Comprehensive General Liability

Limits shall not be less than:
$1,000,000 Bodily Injury and Property Damage Combined Single Limit.
Coverage is to be written on an "occurrence" basis.
Coverage to include:
- Premises Operations
- Products/Completed Operations
- Independent Contractors
- Personal Injury (with Employment Exclusion deleted)
- Broad Form Property Damage

Endorsement
- "X," "C," and "U"
- Contractual Liability

Contractual Liability coverage shall specifically include the indemnification set forth below.

4. Umbrella Liability

Limits shall not be less than:
$2,000,000 Bodily Injury and Property Damage Combined Single Limit.
This Policy shall apply in excess of the limits stated in 1, 2, and 3 above.

5. Additional Insured

The Village of Northbrook and the Northbrook Park District shall be named as Additional Unsured on all policies, except for:

Worker's Compensation

Each such additional Insured endorsement shall identify Village as follows: Village of Northbrook, including its Board members and elected and appointed officials, its officers, employees, agents, attorneys, consultants, and representatives.

C. Indemnification: If this Contract/Proposal is accepted, Proposer proposes, and agrees, that Proposer shall indemnify, save harmless, and defend Owner against all damages, liability, claims, losses, and expenses (including attorneys' fee) that may arise, or be alleged to have arisen, out of or in connection with Proposer's performance of, or failure to perform, the Work or any part thereof, or any failure to meet the representations and warranties set forth in Section 6 of this Contract/Proposal.

D. Penalties: If this Contract/Proposal is accepted, Proposer proposes, and agrees, that Proposer shall be solely liable for any fines or civil penalties that are imposed by any governmental or quasi-governmental agency or body that may arise, or be alleged to have arisen, out of or in connection with Proposer's performance of, or failure to perform, the Work or any part thereof.

5. Firm Proposal

All prices and other terms stated in this Contract/Proposal are firm and shall not be subject to withdrawal, escalation, or change provided Owner accept this Contract/Proposal within 90 days after the date this sealed Contract/Proposal is opened.

6. Proposer's Representations and Warranties

In order to induce Owner to accept this Contract/Proposal, Proposer hereby represents and warrants as follows:

A. The Work: The Work, and all of its components, shall be of merchantable quality; shall be free from any latent or patent defects and flaws in workmanship, materials, and design; shall strictly conform to the requirements of this Contract/Proposal, including, without limitation, the performance standards set forth in Subsection 1B of this Contract/Proposal; and shall be fit, sufficient, and suitable for the purposes expressed in, or reasonably inferred from, this Contract/Proposal and the warranties expressed herein shall be in addition to any other warranties expressed or implied by law, which are hereby reserved unto Owner.

B. Conflict of Interest: To the best of Proposer 's knowledge, (1) no employee or agent of the Owner is interested in the business of Proposer or this Contract/Proposal; (2) as of the date of this Contract/Proposal neither Proposer r nor any person employed or associated with Proposer has any interest that would conflict in any manner or degree with the performance of the obligations under this Contract/Proposal; and (3) neither Proposer nor any person employed by or associated with Proposer shall at any time during the term of this Contract/Proposal obtain or acquire any interest that would conflict in any manner or degree with the performance of the obligations under this Contract/Proposal.

C. No Collusion: Proposer is not barred from contracting with a unit of state or local government as a result of (i) a delinquency in the payment of any tax administered by the Illinois Department of Revenue unless Proposer is contesting, in accordance with the procedures established by the appropriate revenue act, its liability for the tax or the amount of the tax, as set forth in Section 11-42.1-1 et seq. of the Illinois Municipal Code, 65 ILCS 5/11-42.1-1 *et seq.*; or (ii) a violation of either Section 33E-3 or Section 33E-4 of Article 33E of the Criminal Code of 1961, 720 ILCS 5/33E-1 *et seq.* Proposer represents that the only persons, firms, or corporations interested in this Contract/Proposal as principals are those disclosed to the Owner prior to the execution of this Contract/Proposal, and that this Contract/Proposal is made without collusion with any other person, firm, or corporation. If at any time it shall be found that Proposer has, in procuring this Contract/Proposal, colluded with any other person, firm, or corporation, then Proposer shall be liable to the Owner for all loss or damage that the Owner may suffer, and this Contract/Proposal shall, at the Owner's option, be null and void.

D. Sexual Harassment Policy: Proposer has a written sexual harassment policy in full compliance with Section 2-105(A)(4) of the Illinois Human Rights Act, 775 ILCS 5/2105(A)(4).

E. Patriot Act Compliance: Neither Proposer nor any of its principals, shareholders, members, partners, or affiliates, as applicable, is a person or entity named as a Specially Designated National and Blocked Person (as defined in Presidential Executive Order 13224) and that it is not acting, directly or indirectly, for or on behalf of a Specially Designated National and Blocked Person. Proposer and its principals, shareholders, members, partners, or affiliates, as applicable, are not, directly or indirectly, engaged in, and are not facilitating, the transactions contemplated by this Contract/Proposal on behalf of any person or entity named as a Specially Designated National and Blocked Person. Proposer hereby agrees to defend, indemnify and hold harmless the Owner, its corporate authorities, and all Owner elected or appointed officials, officers,

employees, agents, representatives, engineers, and attorneys, from and against any and all claims, damages, losses, risks, liabilities, and expenses (including reasonable attorneys' fees and costs) arising from or related to any breach of the representations and warranties in this subsection.

F. Compliance with Laws and Grants: Proposer shall give all notices, pay all fees, and take all other action that may be necessary to ensure that the Work are provided, performed, and completed in accordance with all required governmental permits, licenses, or other approvals and authorizations that may be required in connection with providing, performing, and completing the Work, and with all applicable statutes, ordinances, rules, and regulations, including without limitation the Fair Labor Standards Act; any statutes regarding qualification to do business; any statutes prohibiting discrimination because of, or requiring affirmative action based on, race, creed, color, national origin, age, sex, or other prohibited classification, including, without limitation, the Americans with Disabilities Act of 1990, 42 U.S.C. §§ 12101 et seq., and the Illinois Human Rights Act, 775 ILCS 5/1-101 et seq. Proposer shall also comply with all conditions of any federal, state, or local grant received by Owner or Proposer with respect to this Contract/Proposal or the Work.

Proposer shall be solely liable for any fines or civil penalties that are imposed by any governmental or quasi-governmental agency or body that may arise, or be alleged to have arisen, out of or in connection with Proposer's, or its subcontractors', performance of, or failure to perform, the Work or any part thereof.

Every provision of law required by law to be inserted into this Contract shall be deemed to be inserted herein.

G. Qualified: Proposer has the requisite experience, ability, capital, facilities, plant, organization, and staff to enable Proposer to perform the Work successfully and promptly and to commence and complete the Work within the Contract Price and Contract Time Proposals set forth above.

7. Ownership

Designs, drawings, plans, specifications, photos, reports, information, observations, calculations, notes, and any other documents, data, or information, in any form, prepared, collected, or received by the Proposer in connection with any or all of the Work to be performed under this Contract/Proposal ("Documents") shall be and remain the exclusive property of the Owner. At the Owner's request, or upon termination of this Contract/Proposal, the Proposer shall cause the Documents to be promptly delivered to the Owner.

8. Acknowledgments

In submitting this Contract/Proposal, Proposer acknowledges and agrees that:

A. Reliance: Owner is relying on all warranties, representations, and statements made by Proposer in this Contract/Proposal.

B. Reservation of Rights: Owner reserves the right to reject any and all proposals, reserve the right to reject the low price proposal, and reserve such other rights as are set forth in the Instructions to Proposers.

C. Acceptance: If this Contract/Proposal is accepted, Proposer shall be bound by each and every term, condition, or provision contained in this Contract/Proposal and in Owner's written notification of acceptance in the form included in this bound set of documents.

D. Remedies: Each of the rights and remedies reserved to Owner in this Contract/Proposal shall be cumulative and additional to any other or further remedies provided in law or equity or in this Contract/Proposal.

E. Time: Time is of the essence of this Contract/Proposal and, except where stated otherwise, references in this Contract/Proposal to days shall be construed to refer to calendar days.

F. No Waiver: No examination, inspection, investigation, test, measurement, review, determination, decision, certificate, or approval by Owner, whether before or after Owner's acceptance of this Contract/Proposal; nor any information or data supplied by Owner, whether before or after Owner's acceptance of this Contract/Proposal; nor any order by Owner for the payment of money; nor any payment for, or use, possession, or acceptance of, the whole or any part of the Work by Owner; nor any extension of time granted by Owner; nor any delay by Owner in exercising any right under this Contract/Proposal; nor any other act or omission of Owner shall constitute or be deemed to be an acceptance of any defective, damaged, or nonconforming Work, nor operate to waive or otherwise diminish the effect of any representation or warranty made by Proposer; or of any requirement or provision of this Contract/Proposal; or of any remedy, power, or right of Owner.

G. Severability: The provisions of this Contract/ Proposal shall be interpreted when possible to sustain their legality and enforceability as a whole. In the event any provision of this Contract/Proposal shall be held invalid, illegal, or unenforceable by a court of competent jurisdiction, in whole or in part, neither the validity of the remaining part of such provision, nor the validity of any other provisions of this Contract/Proposal shall be in any way affected thereby.

H. Amendments: No modification, addition, deletion, revision, alteration, or other change to this Contract/Proposal shall be effective unless and until such change is reduced to writing and executed and delivered by Owner and Proposer.

I. Assignment: Neither this Contract/Proposal, nor any interest herein, shall be assigned or subcontracted, in whole or in part, by Proposer except upon the prior written consent of Owner.

J. Governing Law: This Contract/Proposal, and the rights of the parties under this Contract/Proposal shall be interpreted according to the internal laws, but not the conflict of law rules, of the State of Illinois.

8. Forfeiture

Notwithstanding any other rights of cancellation contained herein, the Owner and Park District reserve the sole right to cancel their individual Contract/Proposals, with or without cause, by serving notice to the Proposer, by certified mail, return receipt requested, of such intent to cancel this entire Contract/Proposal no less than thirty (30) days prior to any such proposed cancellation date. Such cancellation to be without recourse, except for any sums owed to either party at the time of cancellation. The Proposer acknowledges that all work performed under this Contract/Proposal is contingent upon the Village Board's approval of the funding for the Work. The Proposer shall continue to perform all agreed upon Work until the date of cancellation of the Contract/Proposal.

VILLAGE OF NORTHBROOK
CONTRACT/PROPOSAL FOR
INSTALLATION, MAINTENANCE, AND REMOVAL OF HOLIDAY LIGHTING AND DESIGN OF WINTER DISPLAY IN THE CENTRAL BUSINESS DISTRICT AND VILLAGE GREEN PARK

DATED this day of May 26th, 2026.

Vendor's Status: ( ) _____ Corporation ; (X) IL Partnership; ( ) Individual Proprietor
(State) (State)

Vendor's Name: B&B Holiday Decorating, LLC

Doing Business As (if different): _____

Signature of Vendor or Authorized Agent: 

Proposer's Business Telephone: 847-825-1657 E-Mail: christmas@bbservicesinc.com

If a Corporation or Partnership, list all Officers or Partners:

Principal Office Address: 2048 Foster Ave.
Wheeling, IL 60090

Contact Person: Patrick Fitzgibbons

Proposer's Business Address: 2048 Foster Ave.
Wheeling, IL 60090

Phone: 847-825-1657

NAME	TITLE	ADDRESS
William Cielinksi	Co-Owner	101 Hatlen Ave. Mt. Prospect, IL 60056
Brian Galuski	Co-Owner	1436 Sutton Pl. Gurnee, IL 60031

If it is the Proposer's intention to utilize a subcontractor(s) to fulfill the requirements of this contract, the Village must be advised of the subcontractor's company name, address, telephone and fax numbers, and a contact person's name at the time of proposal submittal.

Will you be utilizing a subcontractor? ☐ YES ☒ NO

If yes, have you included all required information with your proposal submittal? ☐ YES ☐ NO N/A

SUBCONTRACTOR INFORMATION

If selected "Yes" to utilizing a subcontractor, please list the subcontractor information below and include any additional subcontractor information with your proposal.

Subcontractor Name: _____

Subcontractor Scope of Work & Percentage of Overall Work: _____

_____

Contact Phone: _____ Contact E-mail: _____

Subcontractor Name: _____

Subcontractor Scope of Work & Percentage of Overall Work: _____

_____

Contact Phone: _____ Contact E-mail: _____

Subcontractor Name: _____

Subcontractor Scope of Work & Percentage of Overall Work: _____

_____

Contact Phone: _____ Contact E-mail: _____

ACCEPTANCE

The Contract/Proposal attached hereto and by this reference incorporated herein and made a part hereof is hereby accepted by the order of Village of Northbrook ("Owner") this _____ day of _____, 2026.

This Acceptance, together with the Contract/Proposal attached hereto, constitutes the entire and only agreement between the parties relating to the accomplishment of the Work and the compensation therefor and supersedes and merges any other prior or contemporaneous discussions, agreements, or understandings, whether written or oral, and shall prevail over any contradictory or inconsistent terms or conditions contained in any purchase order, acceptance, acknowledgment, invoice, or other standard form used by the parties in the performance of the Contract/Proposal. Any such contradictory or inconsistent terms or conditions shall be deemed objected to by Owner without further notice of objection and shall be of no effect nor in any circumstances binding upon Owner unless accepted by Owner in a written document plainly labeled "Amendment to Contract/Proposal." Acceptance or rejection by Owner of any such contradictory or inconsistent terms or conditions shall not constitute acceptance of any other contradictory or inconsistent terms or conditions.

(SEAL)

Attest/Witness:

By: _____
Derek Gau

Title: Village Clerk

VILLAGE OF NORTHBROOK

By: _____
Cara Pavlicek

Title: Village Manager

REFERENCES

Proposals must include a minimum of three (3) references for clients with whom your company maintained or currently maintains a contract for services comparable to those specified in this Request for Proposals. References for municipal entities are preferred.

Client: Village of Glenview

Contract/Project(s) & Description: Decoration of 105 trees within village with holiday lighting, decoration of ~140x lightpoles with lit garland and/ or wreaths, replacement of banners on 192x lightpoles seasonally

Contact Name: DeWayne Balcom

Contact Phone: 847-376-0091 Contact E-mail: dbalcom@glenview.il.us

Client: Village of Winnetka

Contract/Project(s) & Description: Full branch wrapping of 140+ trees in downtown area including village holiday tree on 4 year cycle including recycling of lighting by designated section annually

Contact Name: Erik Jensen

Contact Phone: 847-716-3534 Contact E-mail: EJensen@winnetka.org

Client: City of Park Ridge

Contract/Project(s) & Description: Decorate 182 trees in downtown area with lighting and 81x lightpoles with garland. Decorate ~5,500 LF of rooflines with C9 LED lighting

Contact Name: Rachel Barkstrom

Contact Phone: 847-318-5231 Contact E-mail: rbarkstrom@parkridge.us

Client: Village of Glen Ellyn

Contract/Project(s) & Description: Decoration of ~77 trees, 231 lightpoles and train station within the village with lighting and garland decor

Contact Name: John Beckman

Contact Phone: 630-547-5533 Contact E-mail: jbeckman@glenellyn.org

ATTACHMENT A – SPECIFICATIONS

1. GENERAL

The Village of Northbrook ("Owner") is seeking a Vendor to design and install a winter display to be located at the southeast corner of Shermer Road and Meadow Road at the entrance to the Village Green Park, in partnership with the Northbrook Park District ("Park District"). Additionally, the Owner is seeking a Vendor to install, maintain, and remove lights from trees within the Central Business District. The Park District is seeking a Vendor to install, maintain, and remove a winter display in Village Green Park.

The Owner and the Park District are jointly seeking proposals for the outlined work, however each will enter into a contract separately with the Vendor. As part of their submission to this Request for Proposals, the Vendor shall provide sample designs of a winter display for the identified sites. Sample designs are presented to the Village Board annually for review and selection.

Designs shall be non-denominational, tasteful, and appropriately scaled to the space being utilized, and the design selected by the Village Board shall be reserved by the Vendor for the Village. For the 2026 winter display, the selected design shall incorporate a design element recognizing and celebrating the Village's 125th anniversary. Additional details regarding this requirement are provided in Section 2D of Attachment A – Specifications.

Displays must be a "warm white" color for the purposes of remaining non-denominational.

Past displays have included 3-D lighted polar bears, reindeer, penguins and snowflake statues.

All work and material not otherwise described shall be of the best quality, and should any workmanship or materials be needed which are not directly or indirectly set forth in his proposal, but which are nevertheless necessary to the proper execution according to the obvious intent, the Vendor will understand same to be implied and shall provide for it in their proposal.

2. SCOPE OF SERVICES

The Vendor shall furnish all supervision, labor, tools, equipment, and materials, except those identified to be provided by the Owner, necessary to install, maintain, and remove holiday lights within the parkway trees of the Central Business District on behalf of the Owner over the course of approximately three (3) years spanning August 2026 through April 2029. Holiday lights will be used all year round. Maps showing where Owner lights are to be installed are included as Attachment C.

A. *INSTALLATION OF HOLIDAY LIGHTING*

The Vendor shall install holiday lights on 99 parkway trees in the Villages' Central Business District and 26 trees within the Village Green Park. This number includes evergreens, deciduous trees (single and multi-stemmed), and several hedges that are to be lit. Included herein are specifications on how the Village desires lights to be installed on these trees and bushes. Lights will be utilized year-round and controlled through timers in street light control boxes from which power is provided. During the holiday season, from approximately November 15 through approximately January 20, the lights will remain on 24 hours per day.

Holiday lights installation to be completed no later than August 11, 2026.

Lights shall be affixed to trees to ensure the lights do not girdle branches or trunks.

Deciduous Trees

A branch wrap style shall be used on all deciduous trees. There should not be more than 2 inches of vertical space between strands of lights on the trunks of trees and branches of trees. At a minimum, all major leader branches of the trees shall be wrapped. The sizes of trees for lights to be installed in are identified in Table 1. All lights used shall be 5mm LEDs in a "warm white" color, with green wires and spacing between lights of approximately 4 inches. The Vendor will supply a sample of the proposed lights to the Village for the Village's approval prior to installation.

Table 1. Village – Deciduous Tree Lighting in CBD

Tree Size (DBH)	Number of Trees
0 – 6.99 inches	66
7 – 11.99 inches	16
12 – 14.99 inches	6
15+ inches	11
TOTAL	99 trees

Table 2. Park District – Deciduous Tree Lighting in Village Green Park

Tree Size (DBH)	Number of Trees
0 – 9.99 inches	1
10 – 19.99 inches	8
20 – 29.99 inches	10
30 – 34.99 inches	6
35 – 39.99 inches	0
40 – 44.99 inches	1
TOTAL	26 trees

Evergreens and Bushes

Evergreen trees shall have lights installed on them in a branch wrap style. The Vendor shall secure lights to keep them from sagging by wrapping the light strands around branches. Each branch of an evergreen tree will have lights on it. Bushes identified in this scope of work will be wrapped in concentric circles of lights with not more than 4 inches of space separating each strand of lights. All lights used shall be 5mm LEDs in a "warm white" color, with green wires and spacing between lights of not more than 2 inches.

General Installation Instruction

Wrapping of each strand must end with a "female end" so the "male end" can be plugged into the next strand or into the female end of a tree. The number of strands of lights in a chain shall be limited by the fuses and draw of the chain of lights. When more than one tee is joined together, the resulting combination must end with one unused male plug. Extension cords shall be 14 gauge wire and plugged into the electrical outlets at the base of the tree. All connections shall be wrapped in electrical tape.

The Vendor shall be paid a lump sum for the installation and materials. The addition of lights to achieve the desired aesthetic shall be incidental to the contract.

Additional Park District Installation

- Install uplighting in five (5) trees in Village Green Park;
- Install an approximately 40-foot light tunnel; and

- Decorate 15 light poles in Village Green Park

B. *MAINTENANCE OF HOLIDAY LIGHTING*

The Vendor shall perform all maintenance necessary for the startup of holiday lighting at a minimum between October 15 and 31st in years 2 and 3 of the contract. The Vendor shall be responsible for the testing of the current holiday lighting that has been installed. Testing shall include identifying where strands are out and probable causes then take the steps outlined below. Pricing for maintenance activities shall be based on rates outlined in Attachment B. The Vendor will notify the Owner and Park District two (2) weeks in advance of their planned start date of work.

i. Bulb Replacement – on strands where a burnt out or missing bulb has been identified as the cause for an outage, the Vendor will install a new bulb and test the strand of lights to ensure the strand is completely lit. The Vendor shall follow this process for each bulb that is found to be burnt out. If more than four bulbs are burnt out on any given strand, the Vendor shall replace the strand.

ii. Fuse Replacement – on strands where a blown fuse has been identified as the cause of an outage, the Vendor shall replace the fuse and test the strand of lights to ensure the entire strand is completely lit. The Vendor shall follow this process for every fuse that is replaced. If more than two fuses are blown during the testing of a strand of lights, the Vendor shall replace the strand.

iii. Rewrapping and Cleanup of Trees – the Vendor shall be responsible for rewrapping strands of lights that have to be replaced or have become unwound due to tree growth or wind. When replacing and rewrapping strands of lights, the Vendor shall follow the specifications outlined herein.

iv. Ongoing Maintenance of Holiday Lighting – after the startup of the holiday lighting has been completed, the Vendor may be recalled to complete repairs to the holiday lighting on an as needed basis.

v. Method of Payment – the Vendor shall be compensated at a time and materials basis for the maintenance of the holiday decorations. The rates used for determining the payment for maintenance of lights shall be those identified in this document.

C. *REMOVAL OF HOLIDAY LIGHTING*

Removal of the holiday lights shall occur on or after February 1, 2029 but must be completed no later than April 30, 2029 unless a later date is agreed to by both parties.

The method of payment for the removal of lights shall be a lump sum payment billed to the Owner after the removal has been completed.

D. WINTER DISPLAYS

The Winter Display shall be designed and installed by the Vendor. All proposed designs submitted by the Vendor shall be held and reserved for the Owner and Park District during the review and evaluation period, including the time required for consideration by the Village Board and Park District. The Vendor shall not withdraw, repurpose, or make such designs available to other clients during this period without the prior written consent of the Owner and Park District. At the conclusion of this contract, the Owner and Park District shall have the right but not the obligation to buy the display at a mutually agreed upon price.

Village Winter Displays

The Winter Display shall be installed at the entrance to the Village Green Park at the southeast corner of Shermer Road and Meadow Road in Northbrook, Illinois. **All winter displays shall be lit using "warm white" LED lights, be non-denominational, tasteful, and scaled to space being used.** For year 1 of the Contract, the Village intends to incorporate a design element within the winter display to recognize and celebrate the Village's 125th anniversary. The Vendor **must include**, as part of its proposal, a design illustrating how the 125th anniversary element will be incorporated into the overall winter display. The proposed design shall be subject to review and approval by the Village prior to installation.

All work needed to install and remove the display, including the 125th anniversary element, shall be the responsibility of the Vendor and shall be included and incidental to the price for the Winter Display.

Village of Northbrook 125th Anniversary Logos (for reference only):

Winter Displays shall be installed and maintained by the Vendor during the scheduled display period. The Vendor shall be responsible for any and all restoration of the site in order to return it to its condition prior to the installation of the Winter Display each year. The Vendor shall provide a minimum of one (1) week notice prior to installation of the Winter Display in order to ensure the Owner has sufficient time to coordinate with the Park District.

Park District Winter Displays
The Park District has identified the primary location for their Winter Display to be the path running south from the Village Green Fountain to Walters Avenue. Work within the Park District property must be done from the paved surface of the paths for the protection of the trees within the park. No vehicles will be allowed to travel the grounds outside of the path. The Vendor shall install the lights prior to each season's start and remove them at the end of the season per the schedule below in order to minimize damage to any trees.

3. SCHEDULE

Table 3. Tentative Contract Schedule (Village Work)	
Task	**Approximate Dates**
1. Install Holiday Lights	August 11, 2026
2. Winter Display Installation	November 2 – 13, 2026
3. Winter Display Removal	January 20, 2027
4. Holiday Light Maintenance (Planned)	October 15 – 31, 2027
5. Winter Display Installation	November 1 – 12, 2027
6. Winter Display Removal	January 20, 2028
7. Holiday Light Maintenance (Planned)	October 15 – 31, 2028
8. Winter Display Installation	November 1 – 15, 2028

9. Winter Display Removal	January 19, 2029
10. Holiday Light Removal	April 2029

Table 4. Tentative Contract Schedule (Park District Work)	
Task	**Approximate Dates**
2. Winter Display Installation	November 2 – 13, 2026
3. Winter Display Removal	January 20, 2027
5. Winter Display Installation	November 1 – 12, 2027
6. Winter Display Removal	January 20, 2028
8. Winter Display Installation	November 1 – 15, 2028
9. Winter Display Removal	January 19, 2029

4. LOCATIONS AND WORKING HOURS

Village of Northbrook
Parkway trees as denoted in Attachment C with this document indicating the location of trees to be lit. Tree species and their diameter are identified on Attachment C. Generally, all parkway trees (and some larger shrubbery), are located along:

- Shermer Road, between Walters Avenue and Church Street;
- Meadow road, between Cherry Lane and Shermer Road; and
- Cherry Lane/Church Street, between Meadow Road and Shermer Road.

Additionally, there are two (2) trees located at the Village Hall (1225 Cedar Lane) that will be lit. No work shall be performed before 7:00 A.M. or after 7:00 P.M., on Saturdays, on any Sundays and/or legal holidays unless approved by the Director of Public Works (Director) or their designee (i.e., Project Supervisor).

The Schedule is subject to modification at the sole discretion of the Owner, based on operational needs and prioritization. The Vendor shall coordinate the scheduling of work for both the initial term and any mutually agreed upon renewals with the Owner's Project Supervisor.

Northbrook Park District
Winter Displays shall be confined to the Village Green Park, primarily between the Village Green Fountain and Walters Avenue, as denoted in Attachment D. No work shall be performed before 7:00 A.M. or after 7:00 P.M., on Saturdays, or on any Sundays and/or legal holidays unless approved by the Park District.

The Schedule (pertaining to the Park District) is subject to modification at the sole discretion of the Park District, based on operational needs and prioritization. The Vendor shall coordinate the scheduling of work for both the initial term and any mutually agreed upon renewals with the Park District's Project Supervisor.

5. MATERIALS

The Vendor shall provide all materials necessary to complete the work outlined in the Scope of Services. Holiday lights installed shall be new and of commercial quality such that they will last the term of the contract. Winter displays shall be of a first quality and maintained such that look in a new state.

6. CLEANUP AND DISPOSAL

All debris from the installation and maintenance of holiday lighting shall be cleaned up each evening before the crew leaves the work site. The Vendor shall not dispose of any materials in waste receptacles in the Central Business District. The Vendor shall dispose of all materials at the Public Works Center located at 655 Huehl Road or the Fleet Maintenance Garage located at 1227 Cedar Lane.

7. TRAFFIC CONTROL

The Vendor shall be responsible for all traffic control required to maintain safety of workers installing lights as well as the motorist, bicyclists, and pedestrians. Traffic control shall be in compliance with the Manual on Uniform Traffic Control Devices (MUTCD).

8. PROJECT SUPERVISOR

The Owner and Park District shall each designate one of their employees to serve as Project Supervisor under this Contract.

9. WORK CREW SUPERVISION

The Vendor shall provide a qualified Foreman to supervise each crew engaged in working under this agreement. The Foreman shall be authorized by the Vendor to accept and act upon all directives issued by the Director or Project Supervisor. Failure of a Foreman to act on said directives shall be sufficient cause for the Village to give notice that the Vendor is in default of the agreement, unless such directives would create potential personal injury or safety hazards, or such directives are contrary to the intent of these specifications.

10. MISCELLANEOUS

The Vendor shall not permit any materials, debris or rubbish to remain upon the adjoining grounds nor cause to exist any unnecessary obstructions. The Vendor shall leave the work place and other areas affected by the work in a clean and safe condition. The Vendor shall be accountable for any and all damages resulting from his operations and shall protect all persons and all public and private property. The Vendor shall immediately repair at its sole expense any damage to public or private property resulting from work performed under this Contract.

11. WARRANTY

The Vendor shall provide a minimum 12-month guaranty covering all labor and materials to correct any work that fails under normal circumstances within the warranty period.

12. INVOICING

Installation of holiday lighting shall be invoiced on a lump sum basis.

Removal of holiday lighting shall be invoiced on a lump sum basis.

Installation and rental of winter display(s) shall be invoiced on a lump sum basis, with removal of those displays incidental to the contract.

Maintenance of holiday lighting shall be invoiced in a detailed manner, with the number of hours worked and the number of hours for vehicles identified, and the dates of that work.

The Owner and the Park District **will be invoiced separately for their respective scopes of work**.

ATTACHMENT B - SCHEDULE OF PRICES

After becoming familiar with the general conditions, special conditions, specifications and addenda attached hereto, the undersigned offers the following prices including all supervision, labor, materials and equipment for providing services related to the installation, maintenance, and removal of holiday lighting in the Central Business District as well as the design and installation of the Winter Displays for the Village of Northbrook and the Northbrook Park District.

Table 5. Village of Northbrook Installation & Removal		**REFERENCE TABLE 5. PRICING IN ADDENDUM 1**	
Item		Timeframe	Cost
1.	Installation of Holiday Lights	by August 11, 2026	$ 75,337.50
2.	Removal of Holiday Lights	February 1, 2029 – April 30, 2029	$ 22,601.00
3.	Planned Maintenance of Holiday Lights	Annually	$ 17,640.00
4.	Installation, Rental, and Removal of Winter Display (Village Green Fountain)	Annually	Project Allowance $9,600

Table 6. Northbrook Park District Installation & Removal			
Item		Timeframe	Cost
5.	Installation and Removal of Winter Display	November 2, 2026 – January 20, 2027 (Year 1)	$ 11,310.00
6.	Installation and Removal of Winter Display	November 1, 2027 – January 20, 2028 (Year 2)	$ 11,310.00
7.	Installation and Removal of Winter Display	November 1, 2028 – January 10, 2029 (Year 3)	$ 11,310.00
		Total	$ 33,930.00

Table 7. Additional Items		
Item		Unit Price
6.	String of 50 LED 5mm Lights	$ 9.25

Table 8. Labor & Equipment Rates		
Item		Hourly Rate
7.	Labor Rate	$ 110.00
8.	½ ton Pickup Truck	$ 0.00*
9.	45 ft. Boom Lift	$ 0.00*
10.	45 ft. Truck Mounted Aerial Lift	$ 0.00*

* Labor rate includes necessary equipment for work to be completed

ATTACHMENT C –
Village of Northbrook Maps of Holiday Lighting/Display Installation

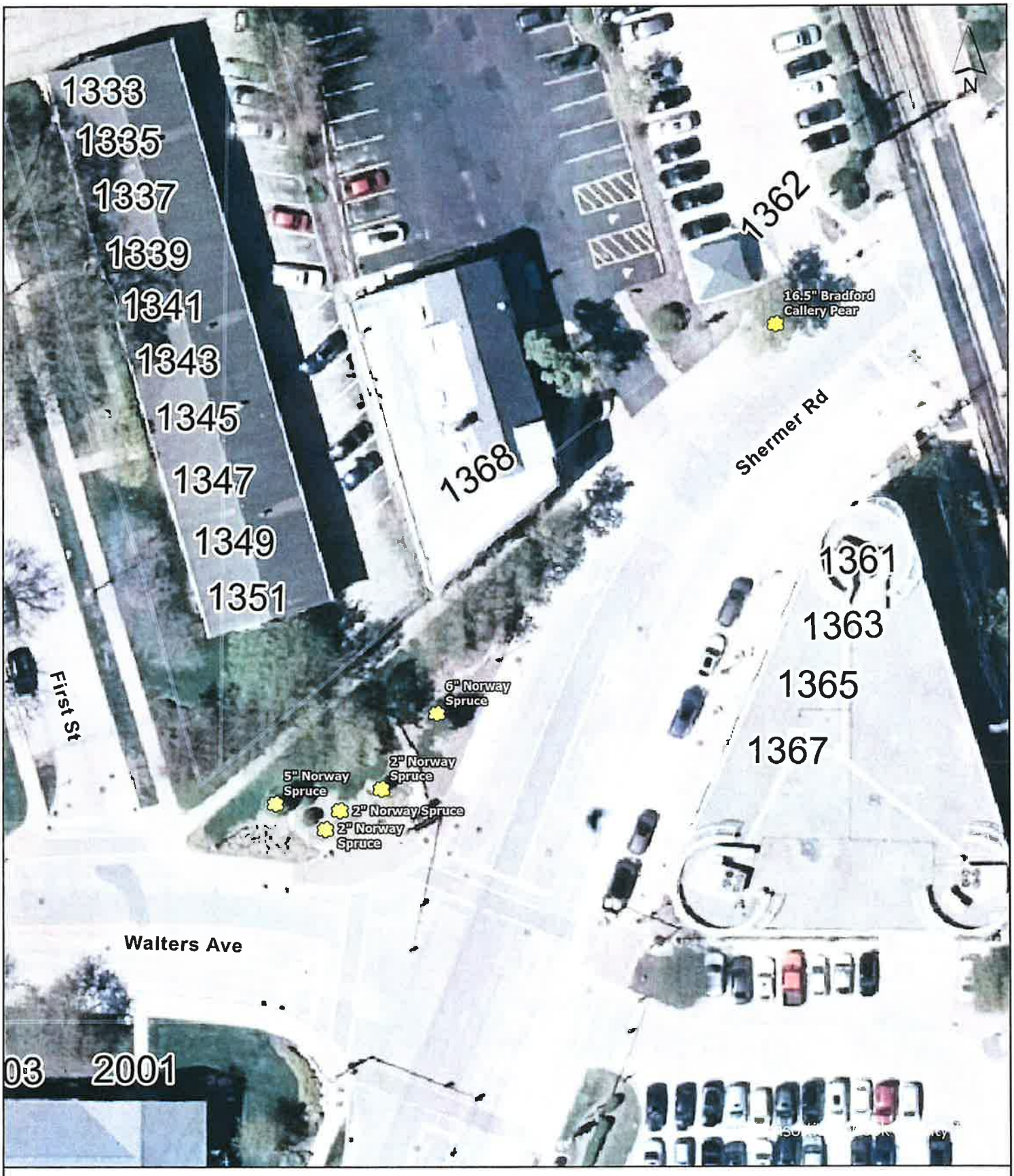

Holiday Lights 2026

GIS Consortium

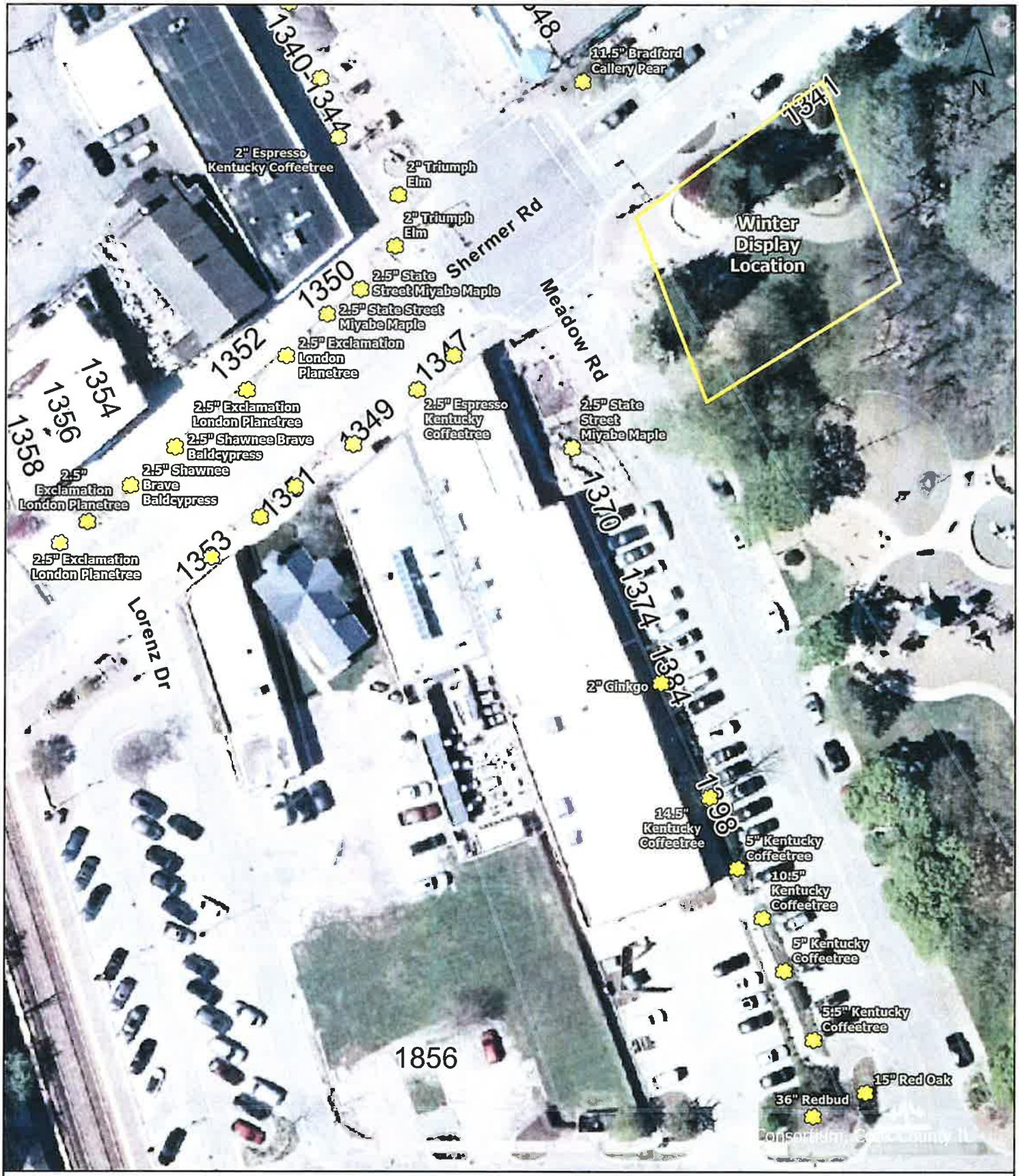

Holiday Lights 2026

GIS Consortium



Holiday Lights 2026

GIS Consortium

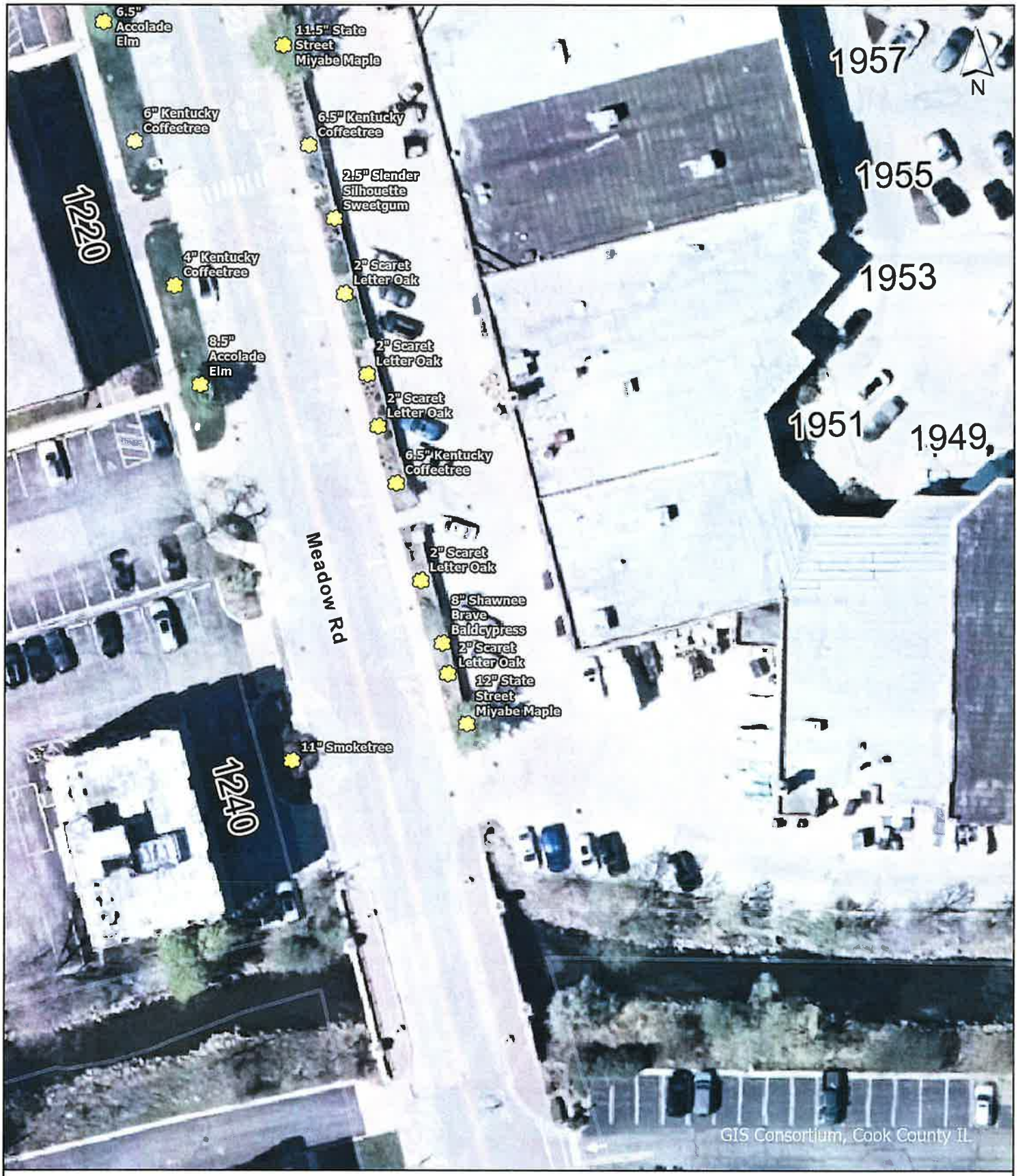

Holiday Lights 2026

GIS Consortium



Holiday Lights 2026

GIS Consortium

4/28/2026

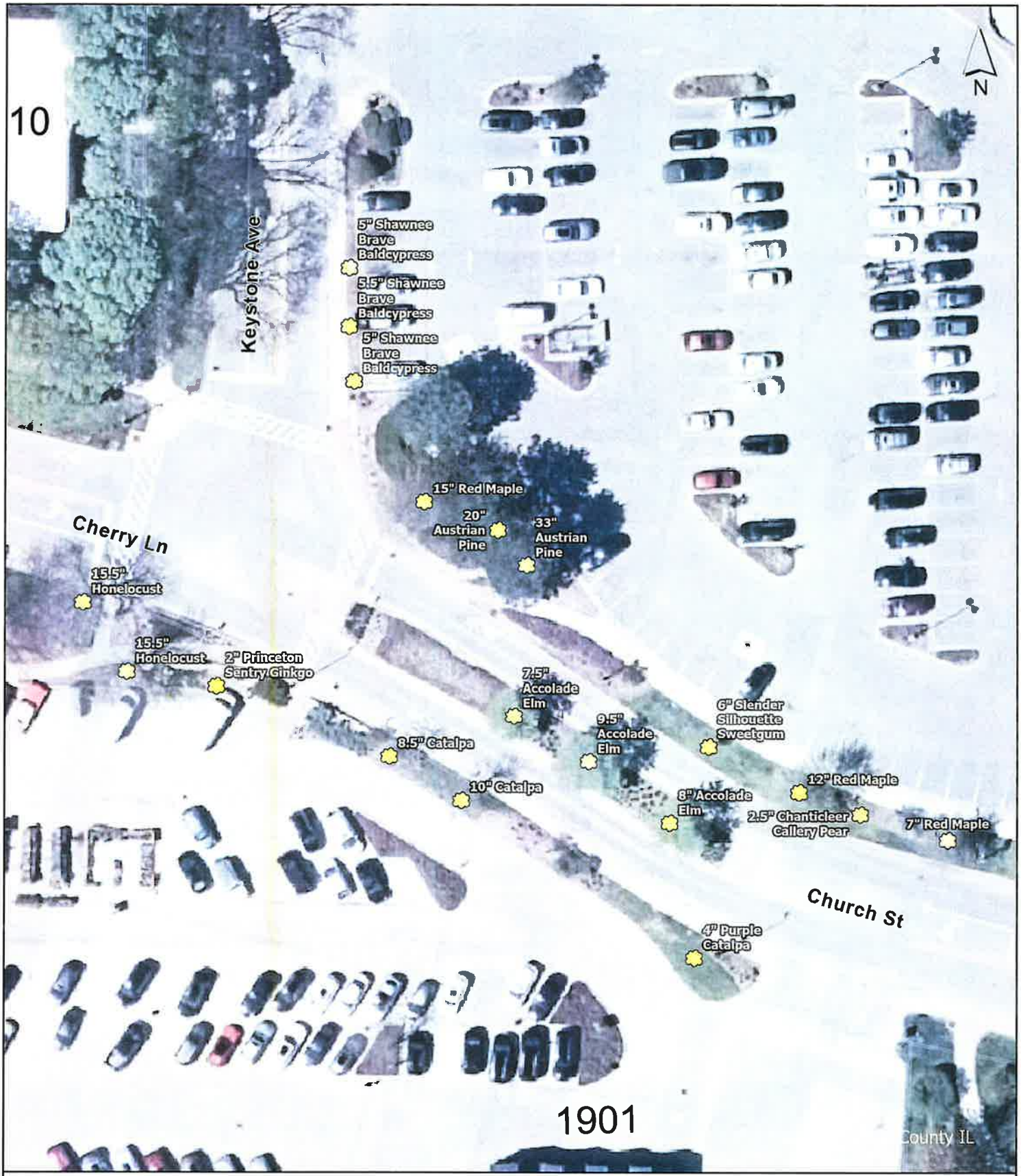

Holiday Lights 2026

GIS Consortium

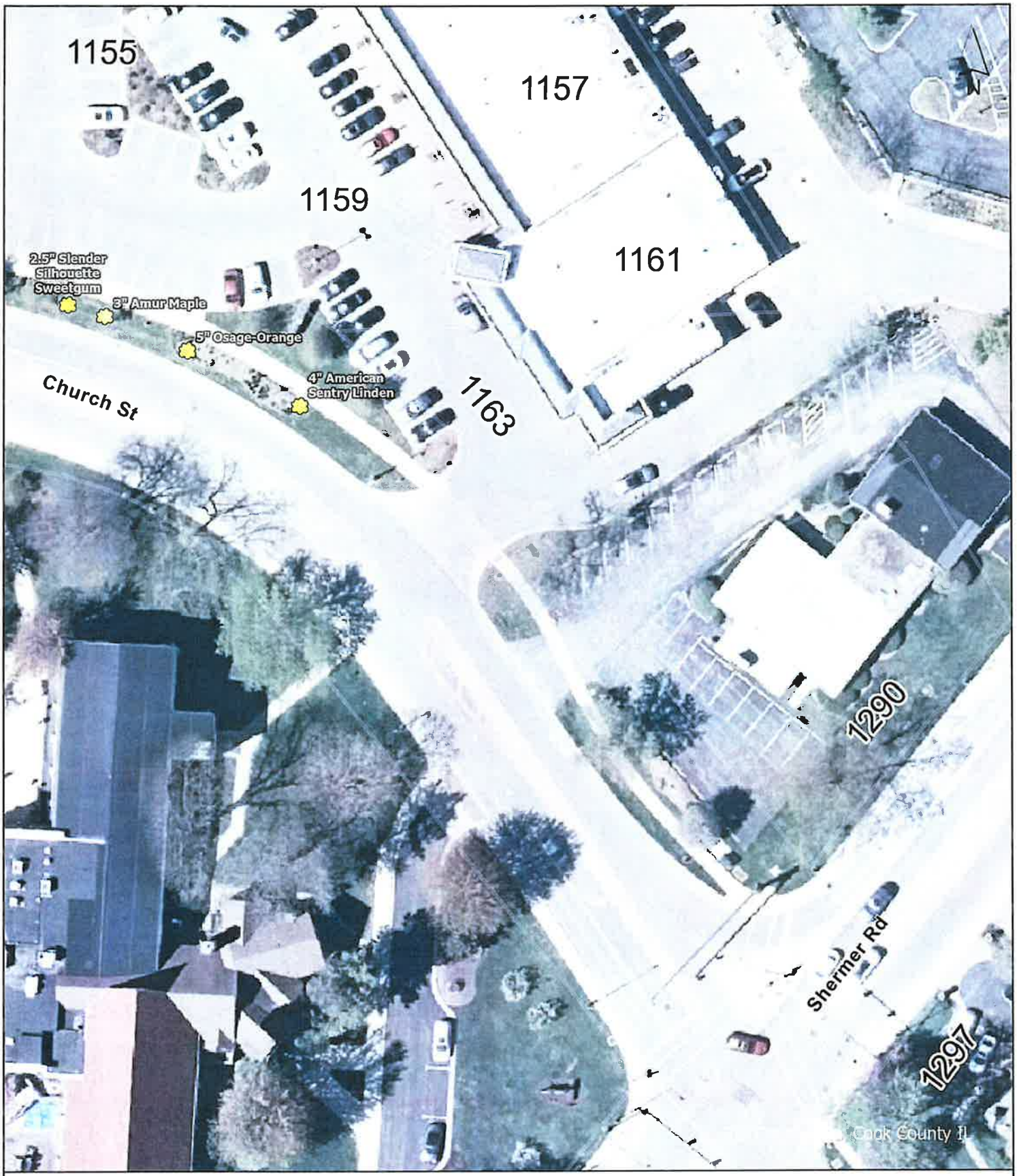

Holiday Lights 2026

GIS Consortium



Holiday Lights 2026

GIS Consortium

ATTACHMENT D –
Northbrook Park District Maps of Holiday Lighting/Display Installation

Village Green North Holiday Lights



3/31/2026

1:632

0 0 0.01 0.02 mi

0 0.01 0.01 0.02 km

Holiday Light Poles

Wrap Trees

Holiday Tree Lights

Uplights

Sources: Esri, TomTom, Garmin, FAO, NOAA, USGS, (c) OpenStreetMap contributors, and the GIS User Community, Sources: Esri, Vantor, Airbus DS,

Village Green South Holiday Lights

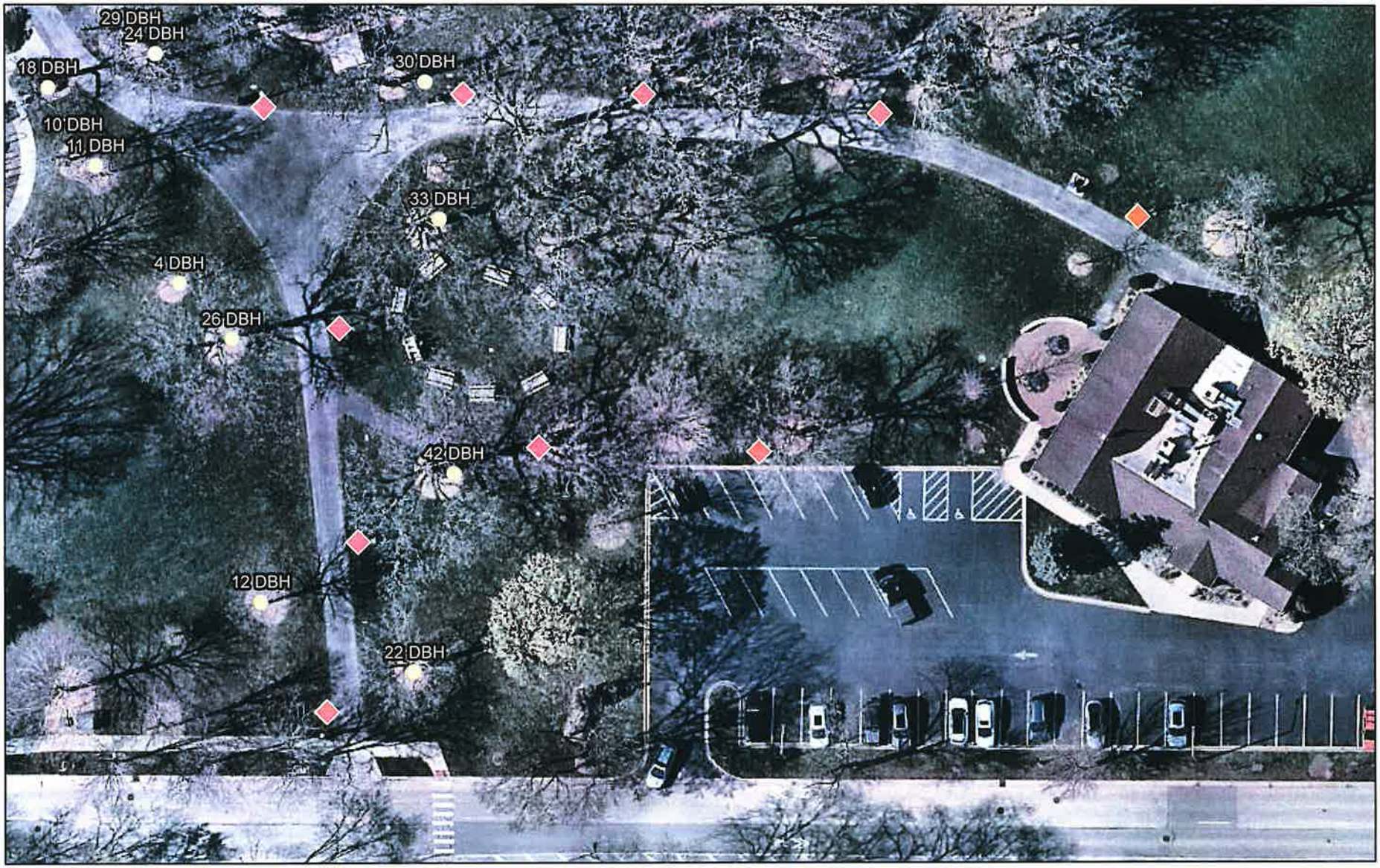

3/31/2026

Holiday Light Poles

Holiday Tree Lights

Wrap Trees

1:724

0 0 0.01 0.02 mi

0 0.01 0.01 0.02 km

Sources: Esri, TomTom, Garmin, FAO, NOAA, USGS, (c) OpenStreetMap contributors, and the GIS User Community, Sources: Esri, Vantor, Airbus DS,

northbrook

PUBLIC WORKS DEPARTMENT

FROM: Jean Paul Soens, Management Analyst

DATE: May 21, 2026

SUBJECT: **REQUEST FOR PROPOSALS FOR HOLIDAY LIGHTING INSTALLATION ADDENDUM #1**

Include this addendum with your proposal.

ADDENDUM #1

Clarification 1:

- **ORIGINAL Information of Attachment A – Specifications (2A – Installation of Holiday Lighting):**
  - Deciduous Trees
    - A branch wrap style shall be used on all deciduous trees. There should not be more than 2 inches of vertical space between strands of lights on the trunks of trees and branches of trees. At a minimum, all major leader branches of the trees shall be wrapped. The sizes of trees for lights to be installed in are identified in Table 1. All lights used shall be 5mm LEDs in a "warm white" color, with green wires and spacing between lights of approximately 4 inches. The Vendor will supply a sample of the proposed lights to the Village for the Village's approval prior to installation.

- **UPDATED Information of Attachment A – Specifications (2A – Installation of Holiday Lighting):**
  - Deciduous Trees
    - A branch wrap style shall be used on all deciduous trees. There should not be more than 2 inches of vertical space between strands of lights on the trunks of trees and branches of trees. At a minimum, all major leader branches of the trees shall be wrapped. The sizes of trees for lights to be installed in are identified in Table 1. All lights used shall be 5mm LEDs in a "warm white" color, with green wires and spacing between lights of approximately 6 inches. The Vendor will supply a sample of the proposed lights to the Village for the Village's approval prior to installation.
    - Branch wrap style shall not apply to the Park District trees identified in "Table 2. Park District – Deciduous Tree Lighting in Village Green Park" and "Attachment D – Northbrook Park District Maps of Holiday Lighting/Display Installation". Trees identified for the Park District shall be limited to trunk wrapping only.
    - Branch wrap shall also not apply to the five (5) Village trees located at the northwest intersection of Shermer Road and Walters Avenue. These trees shall be limited to trunk wrapping only.

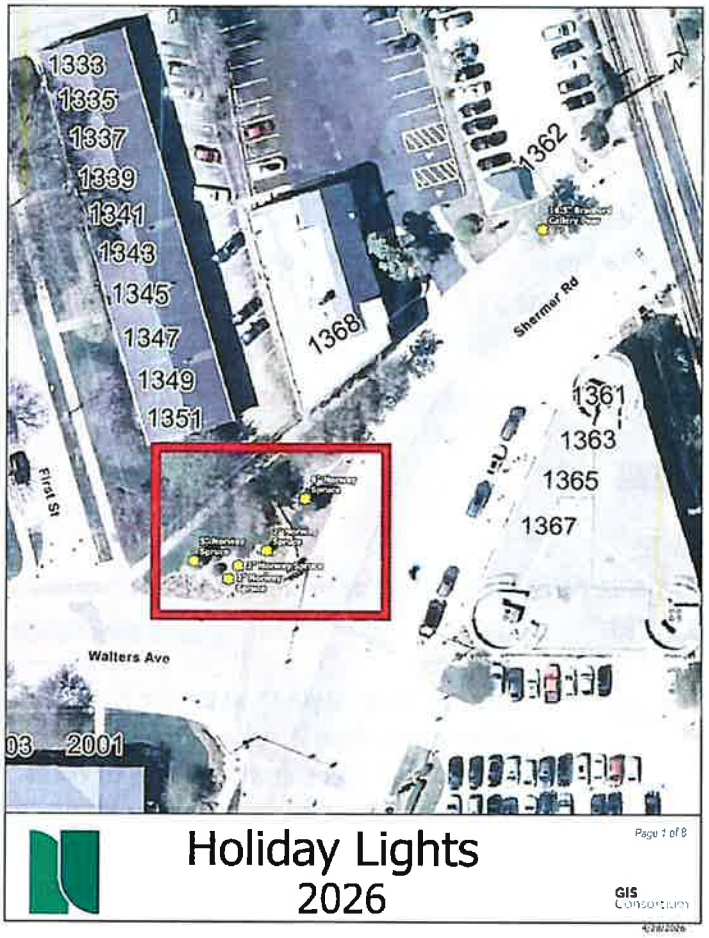

Clarification 2:

- Revised Schedule of Prices for Table 5 (below). Changes to Table 5 are identified in red.

Table 5. Village of Northbrook Installation & Removal			
Item		Timeframe	Cost
1.	Installation of Holiday Lights	by August 11, 2026	$ 75,337.50
2.	Lease of Holiday Lights from Vendor	August 11, 2026 – April 30, 2029	$ 61,500.00, 20,500.00 Annually
3.	Purchase of Holiday Lights from Vendor	N/A	$ 36,900.00
4.	Removal of Holiday Lights	February 1, 2029 – April 30, 2029	$ 22,601.00
5.	Planned Maintenance of Holiday Lights	Annually	$ 17,640.00
6.	Installation, Rental, and Removal of Winter Display (Village Green Fountain)	Annually	Project Allowance $9,600

All pricing is based on calculation of 4,100-4,500 total strands of lights used for installation (205,000-225,000 total lights)

End of Addendum 1

northbrook

PUBLIC WORKS DEPARTMENT

FROM: Jean Paul Soens, Management Analyst

DATE: May 22, 2026

SUBJECT: **REQUEST FOR PROPOSALS FOR HOLIDAY LIGHTING INSTALLATION ADDENDUM #2**

Include this addendum with your proposal.

ADDENDUM #2

Clarification 1:

- **Revised Table 1. Village – Deciduous Tree Lighting in CBD**

Tree Size (DBH)	Number of Trees
0 – 6.99 inches	66
7 – 11.99 inches	15
12 – 14.99 inches	11
15+ inches	12
TOTAL	104 trees

Clarification 2:

- **Revised Attachment C – Village of Northbrook Maps of Holiday Lighting/Display Installation**
  - **See pages 2 – 9 of Addendum 2**



Holiday Lights 2026

GIS Consortium

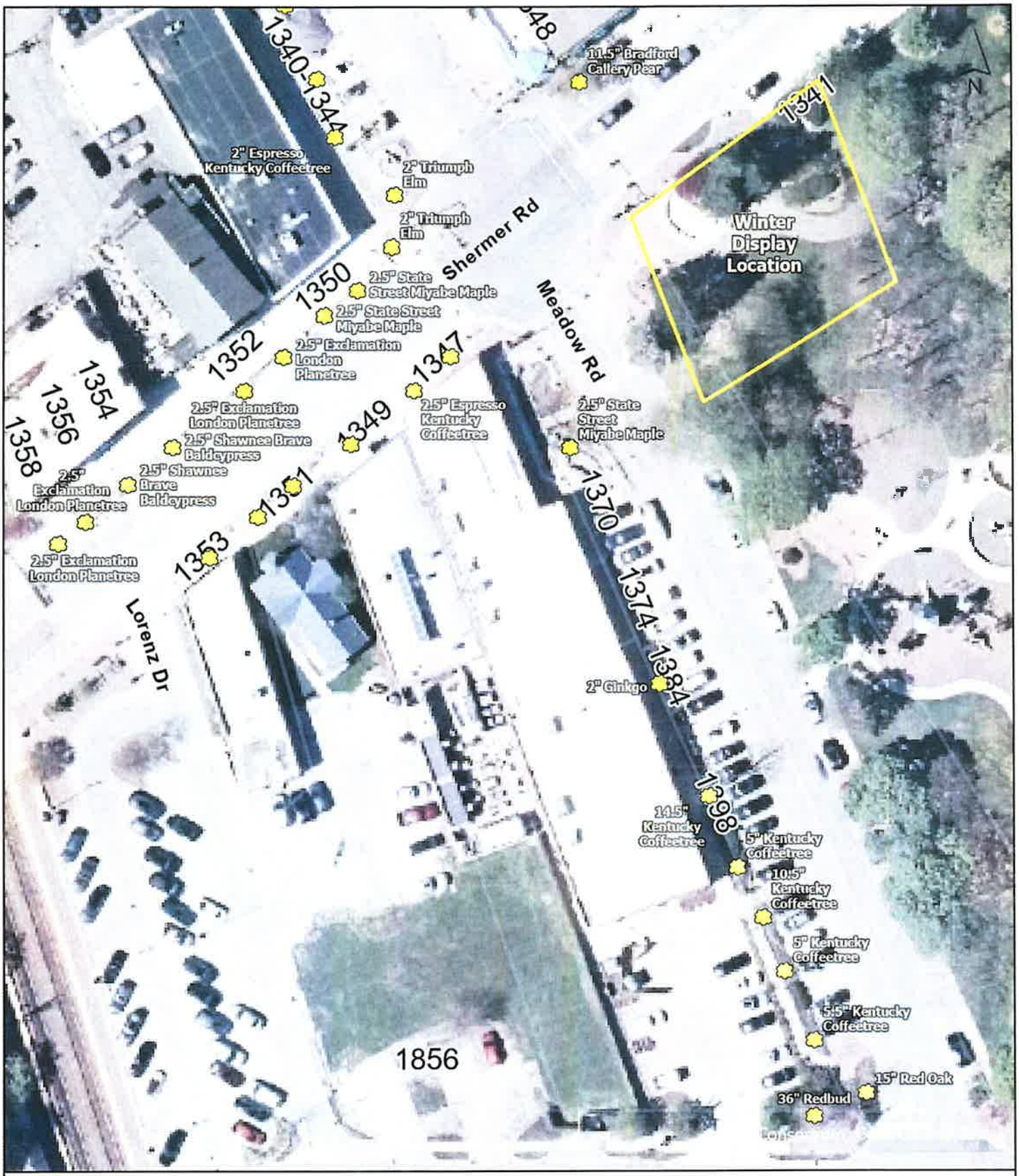

Holiday Lights 2026

GIS Consortium

5/21/202



Holiday Lights 2026

GIS Consortium

5/21/2026

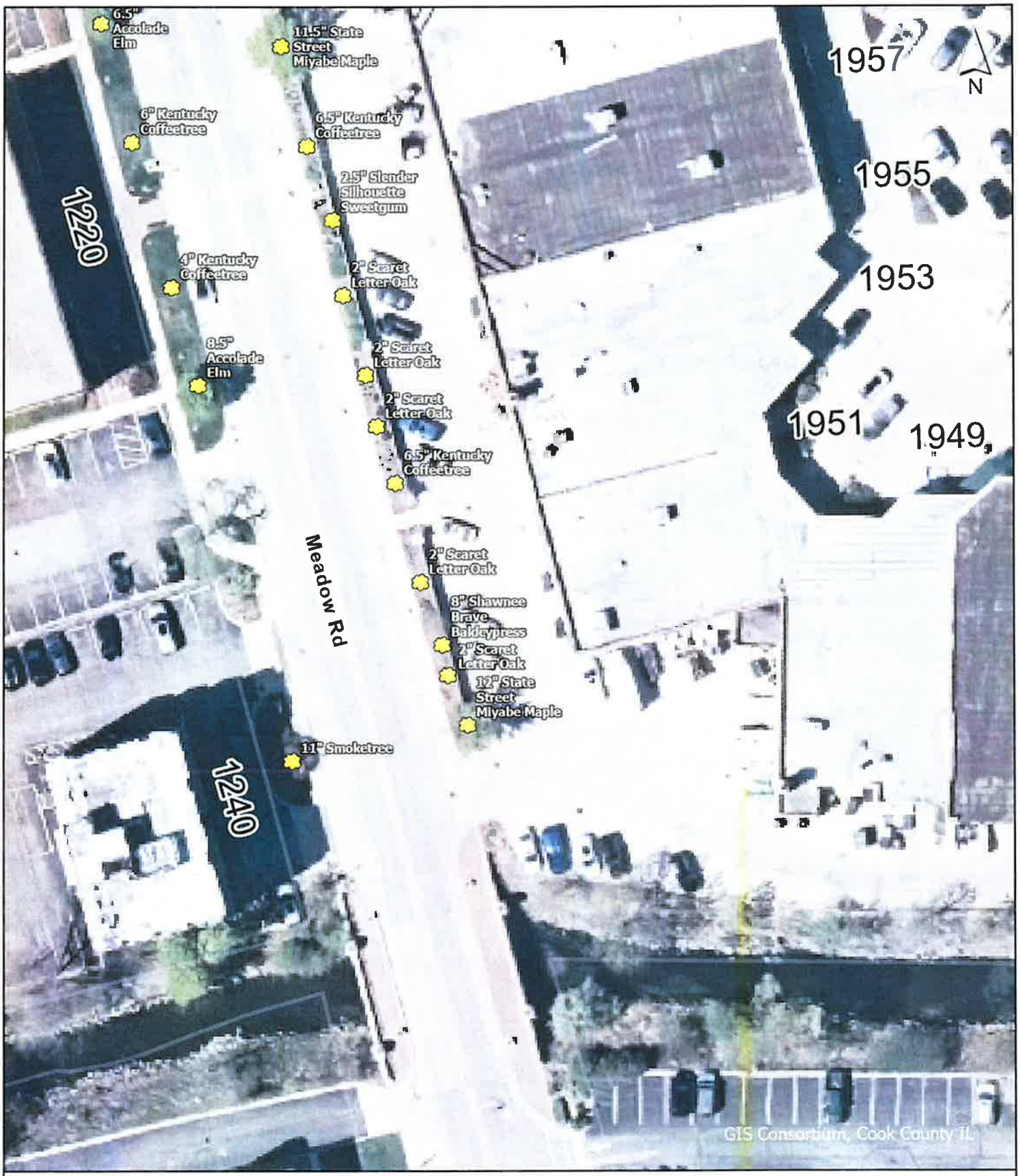

Holiday Lights 2026

GIS Consortium

5/21/2026



Holiday Lights 2026

GIS Consortium

5/21/2026

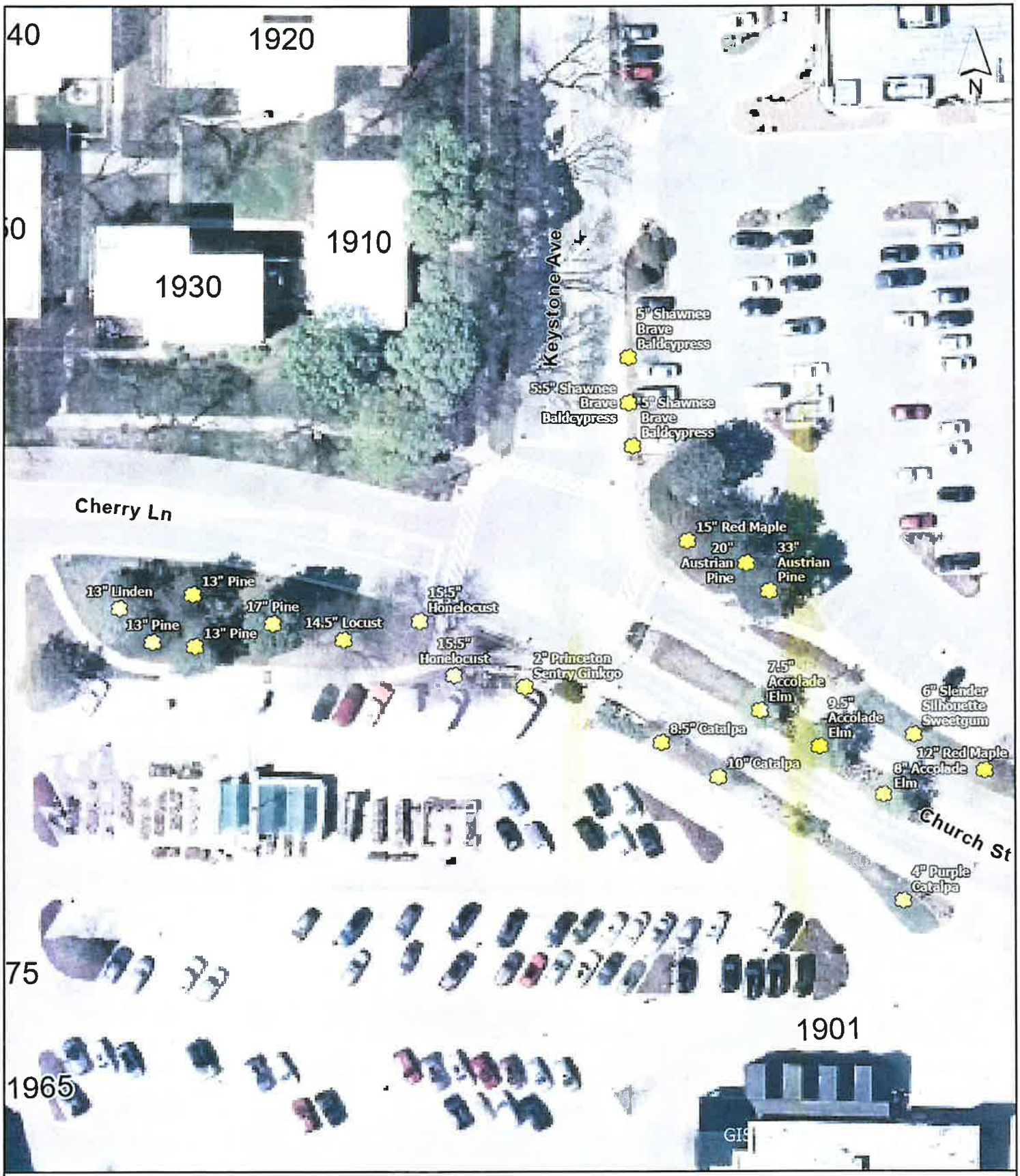

Holiday Lights 2026

GIS Consortium

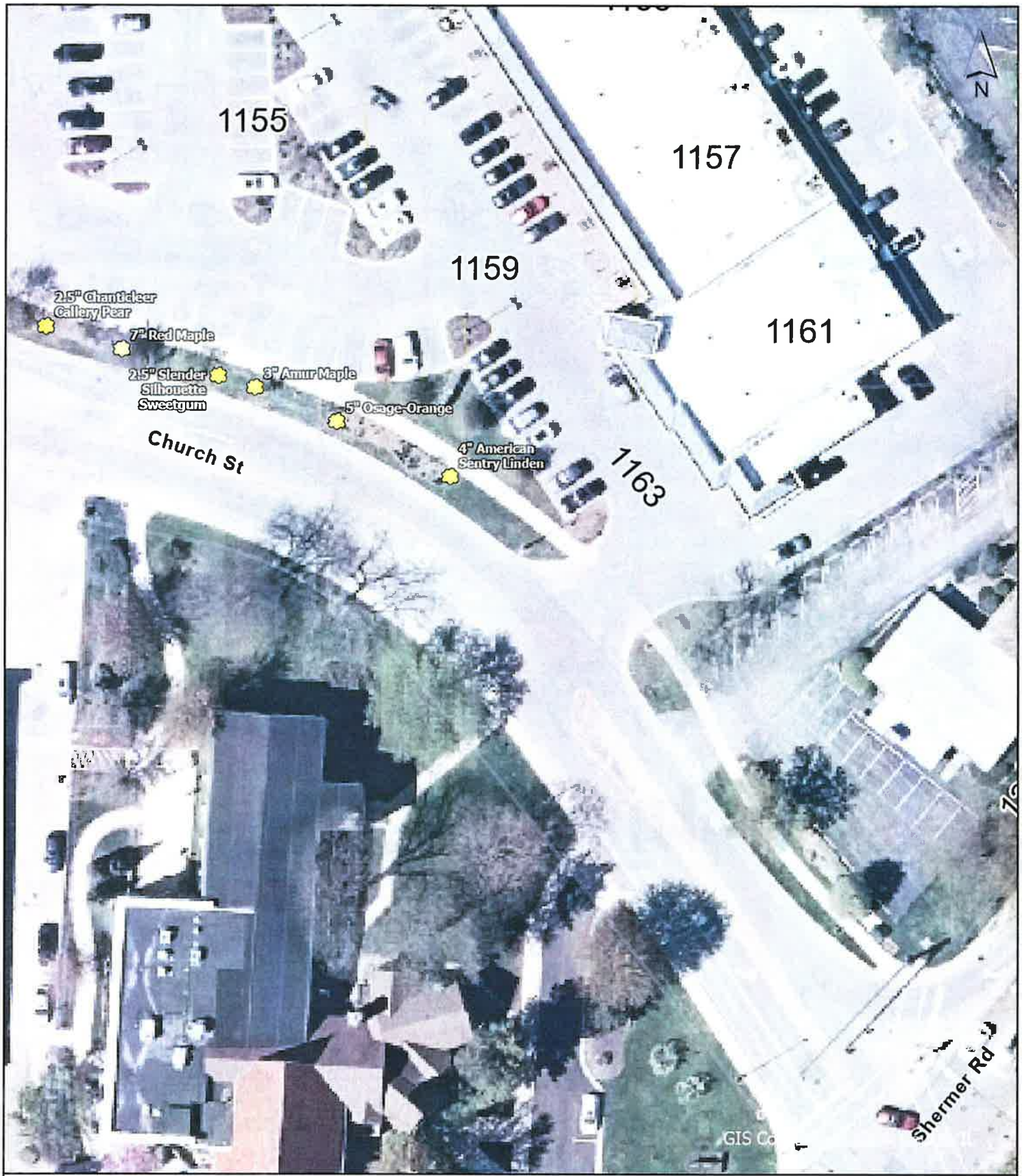

Holiday Lights 2026

GIS Consortium

5/21/2026



Holiday Lights 2026

GIS Consortium

5/21/2026

Certificate of Good Standing

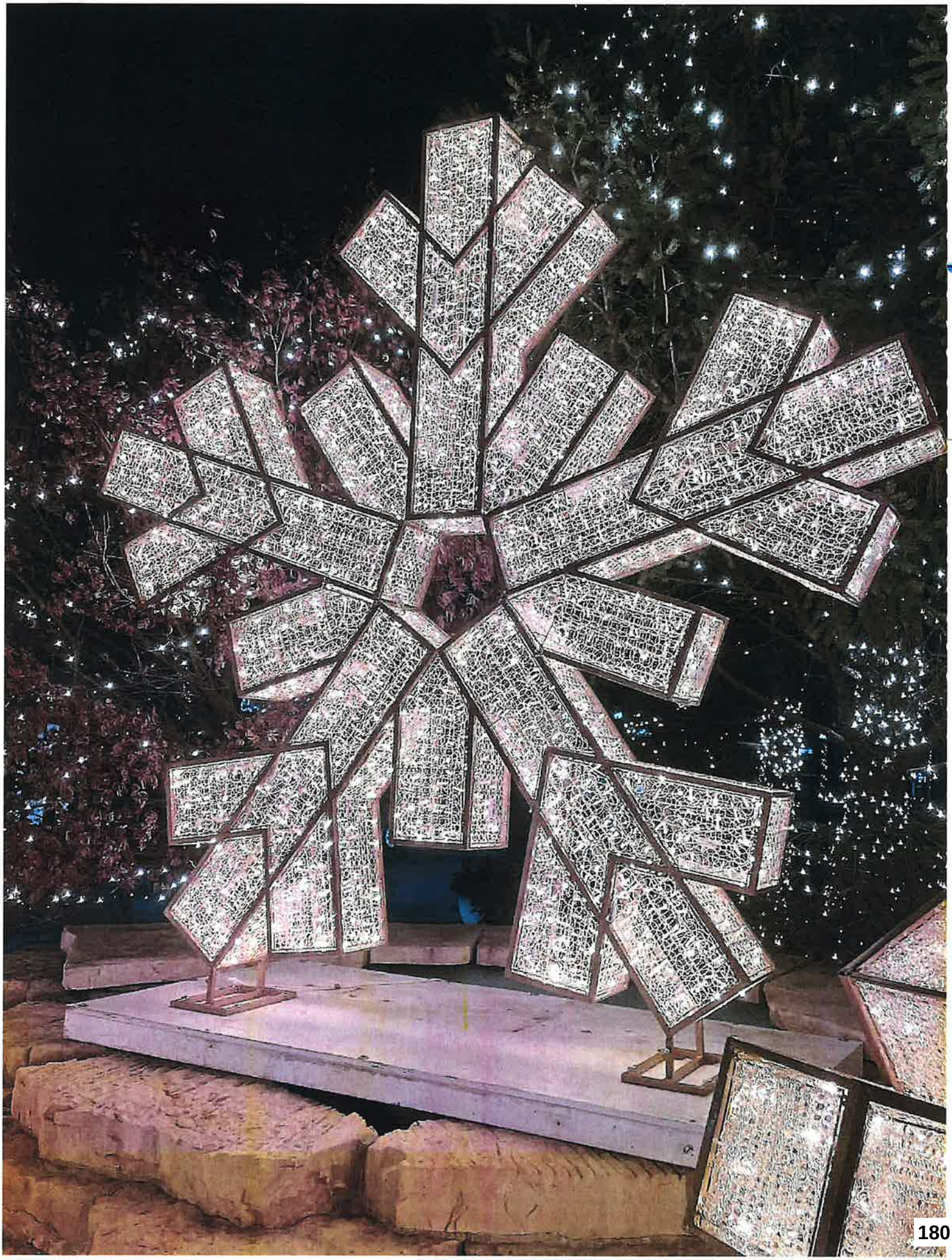

File Number 0164463-7

STATE OF ILLINOIS

OFFICE OF THE SECRETARY OF STATE

To all to whom these Presents Shall Come, Greeting:

I, **Alexi Giannoulias,** *Secretary of State of the State of Illinois, do hereby certify that I am the keeper of the records of the Department of Business Services. I certify that*

B & B HOLIDAY DECORATING, L.L.C., HAVING ORGANIZED IN THE STATE OF ILLINOIS ON OCTOBER 06, 2005, APPEARS TO HAVE COMPLIED WITH ALL PROVISIONS OF THE LIMITED LIABILITY COMPANY ACT OF THIS STATE, AND AS OF THIS DATE IS IN GOOD STANDING AS A DOMESTIC LIMITED LIABILITY COMPANY IN THE STATE OF ILLINOIS.

In Testimony Whereof, *I hereto set my hand and cause to be affixed the Great Seal of the State of Illinois, this* 7TH *day of* JULY *A.D.* 2025 .

SEAL OF THE STATE OF ILLINOIS — AUG. 26TH 1818

Authentication #: 2518803768 verifiable until 07/07/2026
Authenticate at: https://www.ilsos.gov

Alexi Giannoulias
SECRETARY OF STATE

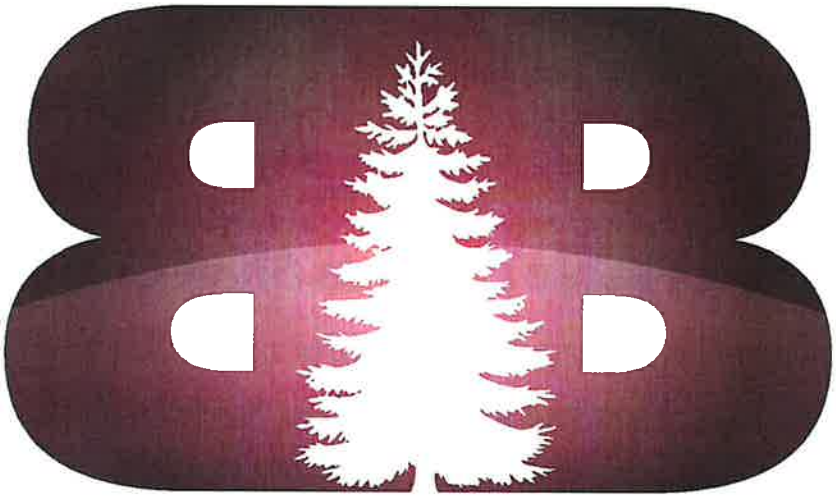

HOLIDAY
DECORATING
LLC

Original: [ ]

Copy: [X]

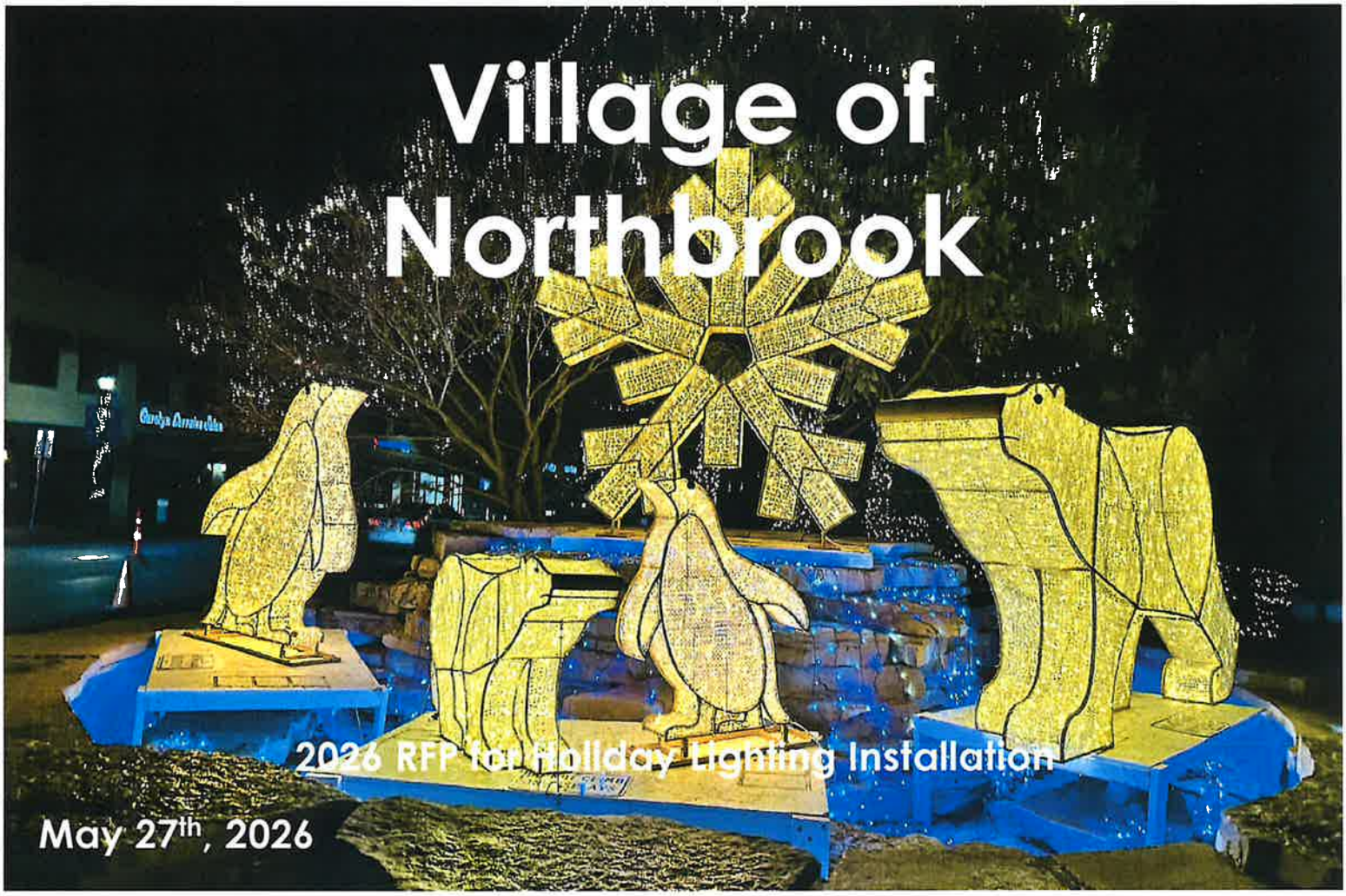

HOLIDAY DECORATING LLC

northbrook 125

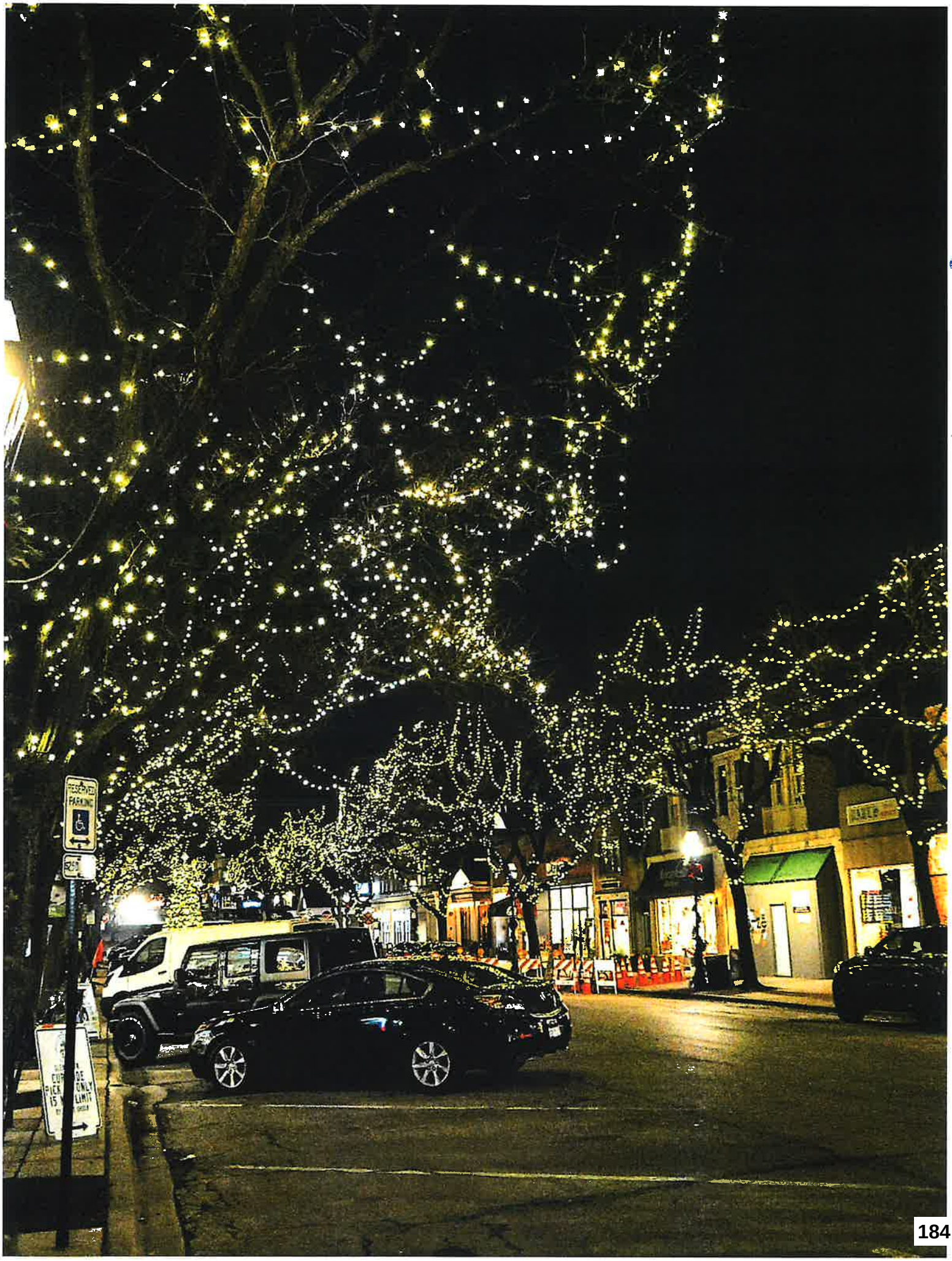
RESERVED
PARKING

Table of Contents

Firm Information	5
Project Team	9
Design Experience	13
Project Approach	27
Critical Issues	31
Clarifications	35
Proposed Financing Plan	39
RFP and Pricing	43
Fountain Design Year 1	95
Certificate of Good Standing	99

HOLIDAY DECORATING LLC

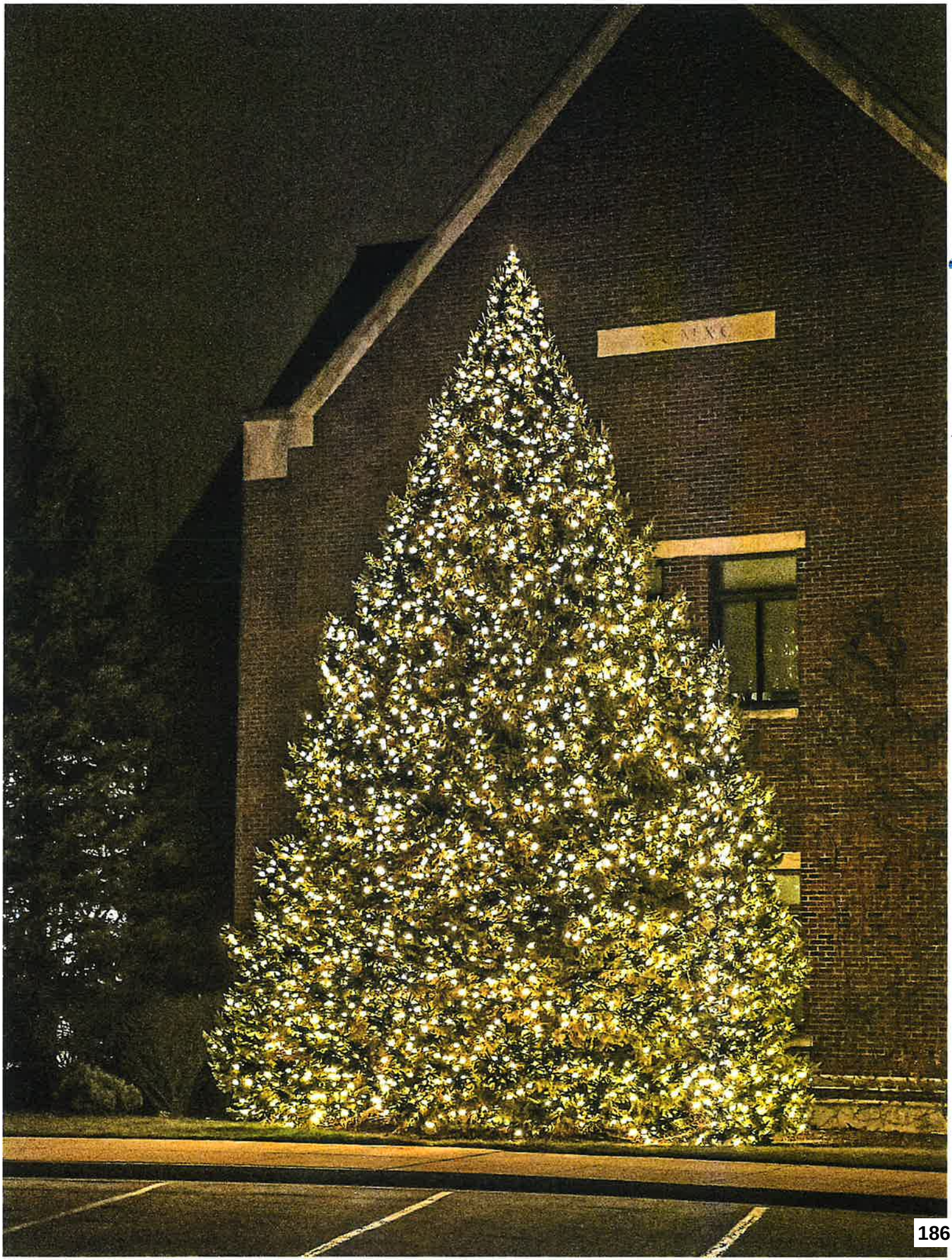

Firm Information


ROAD
CLOSE

History

B&B Holiday Decorating, LLC has been the company trusted to brighten the holiday season in the Chicagoland area since 2000. We began as a family-owned business, focusing on customer service and satisfaction, and have remained consistent for the last 25+ years. Our motto still stands true: *"No Hassle Holiday Decorating."*

We offer complete decorating services to include residential, commercial and municipalities. Our service line has continued to expand each year, while maintaining our hands-on approach. Each job is unique, and we strive for complete customer satisfaction throughout our entire process, from design to take-down.

We look forward to continuing a relationship with the Village of Northbrook.

Contact Information

B&B Holiday Decorating

2048 Foster Ave.

Wheeling, IL 60090

www.bbholidaydecorating.com

Contact: Patrick Fitzgibbons

Patrick@bbservicesinc.com

O- (847) 825-1657

C- (224) 245-0025



Project Team



Project Team



Brian Galuski

Owner, Co-Founder

Brian received a degree in Computer Engineering from Illinois State University. He understands each client's needs and has served as a crucial planning partner for many of B&B's clients. Brian continues to explore new technologies in holiday lighting to ensure all of B&B's clients have the best possible displays.



Bill Cielinski

Owner, Co-Founder

Bill received a degree in Electrical Engineering from Milwaukee School of Engineering. He has used his degree to design hospitals across the country, but continues to focus on his true passion of Christmas lights. Bill's electrical and engineering knowledge makes him unique when it comes to trouble shooting and design.



Patrick Fitzgibbons

Design & Sales

Patrick has had a passion for Christmas lights since he was young. Winning multiple awards for holiday lighting projects he uses his experience working with customers of various sizes to design many unique projects for the holiday seasons. Patrick will be the lead designer and the point of contact for the design and planning of your display.



Todd Alexander

Project Manager, Warehouse Operations

With 20 years of experience in the service and installation industries Todd manages inventory and warehouse management for millions of lights, garland wreaths and hundreds of custom pieces. He makes sure everything needed for your project is in stock or custom built in our workshop and ready for use to make your project beautiful.

HOLIDAY DECORATING LLC



Design Experience



Village of Northbrook

In 2020 the Village of Northbrook put out an RFP for decorating their trees within the downtown area. B&B won the RFP for branch wrapping trees and leaving them up year round with maintenance in 2021 & 2022. The cost savings of leaving in place allowed the village to add more decorations and led to a "Fountain Lighting Ceremony" in which a new design is created with a theme for their downtown fountain each year. With a set budget for this part of the project and an understanding that the design changes annually this part of their scope is rented to keep costs consistent and designs new and fresh looking. A subsequent RFP in 2023 included this element as part of their contract which we continue to provide.







The scope of work included:

- Decorate 68 trees around the downtown area with approximately 110,000 LED mini lights
- Maintain and replace damaged and/or non-functioning strands
- New design and Installation of Fountain Display each season

Since completion of the installation the response has been extremely positive, the trees have even served as a backdrop for the community and the Chamber of Commerce/Village Board is more involved in the Fountain Lighting Ceremony.

HOLIDAY DECORATING LLC


Orangetheory
FITNESS
ROLLER BLADES
SKATE BOARDS
BICYCLES
ALLOWED ON
SIDEWALKS
13-4-4

City of Park Ridge

The City of Park Ridge took over holiday planning and decoration of the city from a non-profit in 2022 and moved forward with an RFP process which B&B was able to assist with the planning of due to our familiarity with the non-profits work. We worked with the City to designate zones for installation with priority to certain areas based on their historical decorations and when the RFP came out we were fortunate to win the bid.

Our relationship continues to this day winning susequent RFP's adding new areas and types of decorations keeping costs within budget. These additions increase public support and funding and allow the display to continue to grow.

Work Completed included:

- Decorate ~165 trees around the city with 75,000+ LED lights
- Decorate Rooflines of ~2,500 feet of downtown businesses
- Install garland on ~ 64 Street Poles around the downtown area

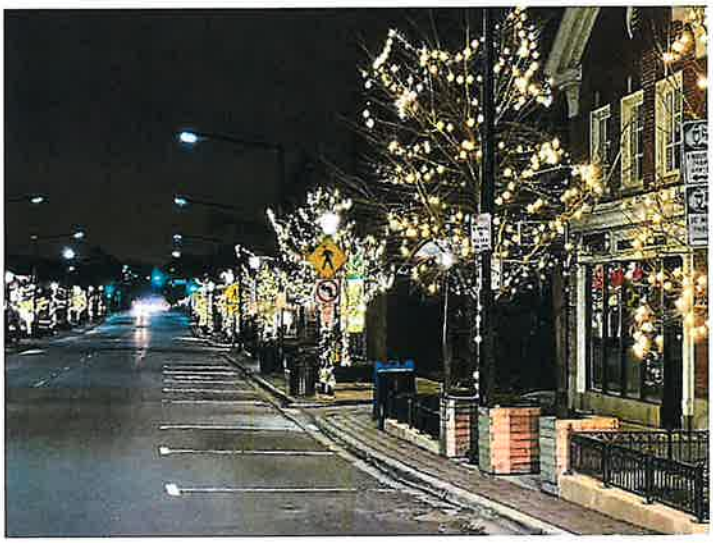





HOLIDAY DECORATING LLC



Village of Glen Ellyn

The Village of Glen Ellyn went to RFP in 2018, looking for a company to handle decorating trees, light poles and the train station in the village. B&B won the RFP to install, maintain and remove lighting and decorations beginning a relationship that continues to this day. The current scope of work changes annually as the village revitalizes their downtown area requiring multiple meetings and agreements each year on the work to be completed accomodating construction while still maintaining their tradition of holiday decorating. The current scope of work includes the following:

- Lighting decorations on approximately 145 trees throughout downtown
- Decorative elements on approximately 219 street light poles through the village.
- Decorate the train station with multiple lighting decorations
- Annual maintenance to ensure new growth on trees does not suffer damage from lighting being in place year round.

The Village has been extremely happy with the work completed, including a change in lighting materials to counter electrical issues with the lights from year round use.







HOLIDAY DECORATING LLC



Village of Algonquin

The Village of Algonquin requested an RFP in 2020 to decorate the newly completed streetscape in their business district with holiday decorations. The scope of work included the following:

- ~(50) Trees Branch Wrapped
- C9 outline of the historic Village Hall
- Decoration of 21x lightpoles.
- Decoration of village plaza and Christmas Tree.

The new decorations were well received with a renewal of the contract in 2021. In 2022 an expansion of the existing contract was created which including decoration of village signs, additional lightpoles and several planter beds within the downtown area with wintry decorations. The scope of work has changed as the village streetscape is completed and additional changes are planned for the 2023 season as we continue to work together to create a more inviting downtown business district.







HOLIDAY DECORATING LLC



Village of Glenview, IL

The Village of Glenview submitted an RFP in 2019 to decorate The Glen shopping district and downtown lampposts with holiday decorations. Since the initial RFP the contract has been extended twice wtih the scope of work increasing each year. The current scope of work includes:

- Decorate 108 trees in the Glen Shopping Center with lights
- Decorate 132 lightpoles with garland and lights
- Decorate 45 lightpoles with wreathes with lights
- Decorate planters in downtown and at train stations with festive decor
- Setup and takedown banners and flags on 156 lightpoles seasonally

The original RFP called for annual replacement of lighting, using our experience we presented an alternate proposal that allowed for significant cost savings freeing up budget for additional decorating or reallocation to other projects. Our work now includes several projects year round with the village as well as the Park District and Library. We are happy to have to a long lasting relationship with the Village of Glenview.







HOLIDAY DECORATING LLC



2024-2025 By The Numbers



- 18,000+ hours of Labor



- 1,983 Bows



- 82,044 C9 LED lights



- 573 Wreathes



- 11.86 miles of extension cord



- 1.56 miles of Garland



Project Approach



Timeline

Based on the volume of work we will expect to beginas soon as contract is approved with lighting installation to be completed by August 11th at the latest. The winter display will be installed and tested with verification of work to be completed prior to the lighting ceremony (Nov. 13th, 2026). Walk-throughs may be completed at the request of the village during and after installation to review work completed.

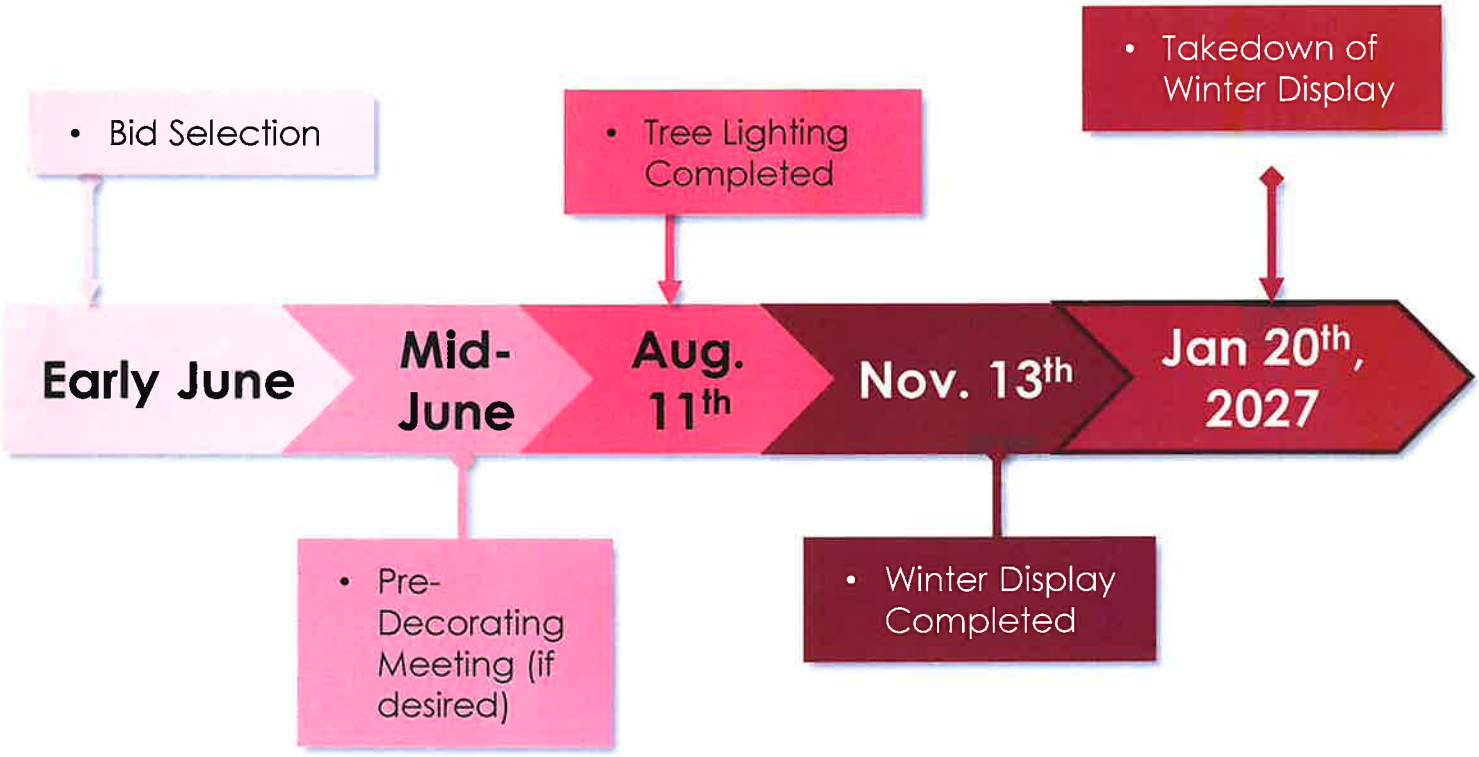

HOLIDAY DECORATING LLC


CRISP & GREEN

Identification of Critical Issues



Critical Issues

The following items will require special attention and prompt decision making:

- Any change in scope or installation of alternate décor in certain areas or landscape shall be identified by the village before work begins
- Best practices and power protection for LED lighting will be used during installation.
- Vehicle and pedestrian traffic areas may be impacted by personnel, equipment and vehicles during installation. Best judgement will be used as to what time of day that work is to be completed unless specified by the village.
- B&B will only provide UL Listed products for outdoor usage.


(847)825-1657

Clarifications



Clarifications

- It is assumed for any work near roadways, or public walkways B&B will have the ability to use the street or walking path in order to install the materials unless otherwise noted by village.
- No permit costs are included as none were identified as being required.
- Visual inspection confirmed that power is accessible at the chosen locations for decoration. Confirmation of non-functioning power at those locations will be noted to the Village.
- Prevailing wages is not applicable to this proposal/bid.
- Any work completed requiring vehicles on grass or in landscaped areas will be completed using ground cover (plywood/ground protection mats) to prevent ruts or damage to area. Any work requiring such activity will be notified to public works for approval and in advance so sprinklers and other obstructions may be flagged prior to work beginning.



Proposed Financing Plan



Proposed Financing

B&B is proposing the following financing plan for the proposal as it applies to work and materials in the RFP.

- Contract will be invoiced on a Lump Sum basis
  - Installation of Holiday Lighting upon completion (including materials)
  - Removal of Holiday Lighting
  - Installation (and removal as incidental) of Winter Holiday Display
  - Maintenance of holiday lighting, identifying hours of labor, dates of work and replacement materials (lighting)
  - Park District Winter Display invoiced individually to the Park District



125th Anniversary
Fountain Design Year 1

Proposed Design for 125th Anniversary Fountain



B&B is proposing the following for the 125th Anniversary fountain display

- 2x 10' warm white lit stars in the lower pond flanked on the sides by 2x smaller 7' warm white lit stars
- In the center of the lower fountain the numbers "125" in lighted metal frames, each standing ~40" tall
- Centered in the upper fountain a custom made 3D Northbrook Logo, standing ~6.5' Tall and 4' in width. The white metal frame will be coated with green mesh on the "b" side and green glitter mesh on the "n" side to highlight the different colors. The interior will be lined with green LED lights completing the visual effect at night


RFP

MEMORANDUM

To: Village Manager Cara Pavlicek
From: Director of Public Works Kelly Hamill
Date: 2026-07-14
Subject: A Resolution Authorizing the Grant Funded Purchase of Three Changeable Message Boards from Traffic and Parking Control Co., LLC (TAPCO) of Brown Deer, Wisconsin

Overview
The Villages of Northbrook and Wheeling were jointly awarded a State grant for the purchase of public safety equipment that will be shared pursuant to the Intergovernmental Agreement approved by Resolution 2025-160.

Fiscal Impact
The Village of Northbrook has received a grant through the Illinois Department of Commerce and Economic Opportunity for the purchase of a fire response utility task vehicle, LED message boards, and a rapid response traffic barrier system. This grant will reimburse the Village for the cost of these purchases up to $500,000. Staff obtained pricing through Traffic and Parking Control Co., LLC (TAPCO) of Brown Deer, Wisconsin for the purchase of three (3) SMC 2000 FM ST Full-Matrix Solar Message Center changeable message boards. This quote was in an amount not to exceed $74,000. TAPCO was awarded a joint purchasing contract (Contract 2020-200) through Omnia Partners for traffic control materials and equipment.

Funds for this purchase will be taken from 11-4100-708-00 and be reimbursed with the funds from the DCEO grant proceeds the Village receives. The grant reimbursement will be shown separately as a revenue offset to the expenditure once all conditions are satisfied and the Village receives the grant proceeds.

Recommendation
Approve.

Strategic Priority
Public and Community Safety : Provide public and community safety through education, prevention, and aligning resources with community needs.

Background
The Villages of Northbrook and Wheeling were awarded a grant from the State of Illinois for the purchase of shared emergency equipment. The grant agreement with the State of Illinois was approved by Resolution 2025-165 and the Intergovernmental Agreement with Wheeling

was approved by Resolution 2025-160 (both included as Supplemental Information).This grant will cover the purchase of a utility task vehicle, three (3) LED message boards, and a rapid response traffic barrier system.

The Villages of Northbrook and Wheeling reviewed specifications for changeable message boards and determined that the Hill and Smith Inc. SMC 2000 FM ST Full-Matrix Solar Message Center changeable message boards best met the needs of both Villages. Traffic and Parking Control Co., LLC (TAPCO) of Brown Deer, Wisconsin distributes these changeable message boards and was awarded a joint purchasing contract (Contract #2020-200) through the Omnia Partners joint purchasing cooperative for traffic control materials and equipment. TAPCO provided a quote for the purchase of three (3) changeable message boards, attached as (***Exhibit A***), in an amount not to exceed $74,000.

Staff recommends Village Board approval of the purchase of three (3) SMC 2000 FM ST Full-Matrix Solar Message Center changeable message boards from TAPCO in an amount not to exceed $74,000. Staff will be present at the Village Board meeting to answer any questions that may arise.

A Resolution Authorizing the Grant Funded Purchase of Three Changeable Message Boards from Traffic and Parking Control Co., LLC (TAPCO) of Brown Deer, Wisconsin
Exhibit A - Quote for Three Changeable Message Boards
Supplemental Information - Resolution 2025-160
Supplemental Information - Resolution 2025-165

Resolution 2026-R-_____

BE IT RESOLVED by the President and Board of Trustees of the Village of Northbrook, County of Cook and State of Illinois, THAT:

A Resolution Authorizing the Grant Funded Purchase of Three Changeable Message Boards from Traffic and Parking Control Co., LLC (TAPCO) of Brown Deer, Wisconsin

is hereby adopted, as follows:

Section 1. RECITALS.

The Village of Northbrook received a grant from the State of Illinois' Department of Commerce and Economic Opportunity (DCEO) in the amount of $500,000 to reimburse the purchase of a fire response utility task vehicle, LED message boards ("***Message Boards***"), and a rapid response traffic barrier system. These assets are intended to be shared with the Village of Wheeling. The grant agreement with the State was approved by Resolution 2025-165. The Village also entered into an Intergovernmental Agreement with the Village of Wheeling outlining the sharing and responsibilities for these assets, which was approved by Resolution 2025-160.

The Villages of Northbrook and Wheeling reviewed specifications for changeable message boards and determined that the Hill and Smith Inc. SMC 2000 FM ST Full-Matrix Solar Message Center changeable message boards best met the needs of both Villages. Traffic and Parking Control Co., LLC (TAPCO) of Brown Deer, Wisconsin ("***Vendor***") distributes these changeable message boards and was awarded a joint purchasing contract (Contract #2020-200) through the Omnia Partners joint purchasing cooperative for traffic control materials and equipment. Vendor provided a quote for the purchase of three changeable message boards (***Exhibit A***) in the not to exceed amount of $74,000.

Funds for this purchase will be taken from 11-4100-708-00 and be reimbursed with the funds from the DCEO grant proceeds the Village receives. Based on these factors, staff recommends Village Board authorization for the purchase of the Message Boards from the Vendor as outlined in the quote included as ***Exhibit A***. The purchase of the Message Boards will be reimbursed through the State of Illinois DCEO grant.

The President and the Board of Trustees have considered these procurements and determined that they are the best interests of the Village.

Section 2. AUTHORIZATION OF PROCUREMENT.

The Village Manager is hereby authorized and directed to execute such documents and make such payments as are necessary to complete the procurement of Message Boards from the Vendor, as outlined in the quote included as ***Exhibit A*** to this Resolution.

Approved:

RESULT:
MOVER:
SECONDER:
AYES:
NAYES:
ABSTAIN:
ABSENT:

_____
Village President

ATTEST:

_____
Village Clerk

SALES QUOTE

Traffic and Parking Control Co., LLC
5100 West Brown Deer Rd
Brown Deer, WI 53223
United States of America
Phone No.:800-236-0112
E-Mail: Tapcosales@tapconet.com

SALES QUOTE DATE
6/9/2026
SALES QUOTE NUMBER
Q26009764
CUSTOMER NO.
C9609

BILL TO
Village of Northbrook
Matt Morrison
655 Huehl Rd
Northbrook, IL 60062
United States of America

SHIP TO
Village of Northbrook
Scott Lemke
655 Huehl Rd
NORTHBROOK, IL 60062
United States of America

Ext. Document No.	SHIP VIA	TERMS	SALESPERSON	VALID UNTIL
SMC2000	BEST RATE Quoted	Net 30 DAYS	Muir Mulholland	7/9/2026

Item/Description	U/M	Quantity	Unit Price	Total Price
1415-2000 Solar Message Center, Full matrix display, 79.5 Height x 133" Width, SMC 2000 FM ST	Each	3	22,606.00	67,818.00
3200-0000 Freight Sales		1	5,850.00	5,850.00

Subtotal:	**73668.00**
Invoice Discount:	0.00
Total Sales Tax:	0.00
Total:	**73,668.00**

All prices are listed in US Dollar (USD)
For terms and conditions, please visit https://www.tapconet.com/terms-conditions

Resolution 2025-R-160

BE IT RESOLVED by the President and Board of Trustees of the Village of Northbrook, County of Cook and State of Illinois, THAT:

A Resolution Authorizing an Intergovernmental Agreement with the Village of Wheeling for the Purchase and Sharing of Grant Funded Public Safety Equipment

is hereby adopted, as follows:

Section 1. RECITALS

The Village of Northbrook ("***Northbrook***") and the Village of Wheeling ("***Wheeling***") desire to enter into an agreement for the purchase and sharing of public safety equipment. This public safety equipment ("***Public Safety Equipment***") shall include a rapid response barrier system and associated equipment, a fire response utility task vehicle (UTV) and associated equipment, and LED changeable message boards. This Public Safety Equipment will be purchased under State of Illinois Department of Commerce and Economic Opportunity grant No 25-203353 ("***Grant Agreement***"), which was secured with the assistance of Representative Katz Muhl. As the Grantee, the Village of Northbrook must purchase and title all equipment for the duration of the Grant Agreement.

To outline the responsibilities and relationship of the Public Safety Equipment purchased with the grant funds, Northbrook and Wheeling will enter into the Intergovernmental Agreement ("***Agreement***"), included and incorporated into Resolution as ***Exhibit A.*** This Agreement outlines ownership and insurance for the duration of the Grant Agreement, storage and access to the equipment, and process for transferring a portion of the Public Safety Equipment once the Grant Agreement has concluded. Regardless of ownership of the Public Safety Equipment, Northbrook and Wheeling intend to continue to share the equipment as outlined in *Exhibit A*.

Based on these factors, Village staff recommends entering into an Agreement with the Village of Wheeling for the purchase and sharing of Public Safety Equipment as specified in *Exhibit A* to this Resolution.

The President and the Board of Trustees have considered the Agreement and determined that it is in the best interests of the Village and the public to enter into the Agreement.

Section 2. APPROVAL OF AGREEMENT

The Agreement is approved in substantially the form attached to this Resolution and in a final form acceptable to the Village Manager and the Village Attorney.

Section 3. AUTHORIZATION TO EXECUTE AGREEMENT

The Village Manager and the Village Clerk are hereby authorized and directed to execute and seal, on behalf of the Village, the Agreement only after receipt by the Village Clerk of at least three original copies of the Agreement executed by Wheeling; provided, however, that if such executed copies of the Agreement are not received by the Village Clerk within 30 days after the date of adoption of this Resolution, then this authority to execute and seal shall, at the option of the President and Board of Trustees, be null and void.

Approved: 10/14/25

RESULT:	**APPROVED [5 – 0]**
MOVER:	Robert Israel, Trustee
SECONDER:	Joy Ebhomielen, Trustee
AYES:	Israel, Hebl, Ebhomielen, Kohler, Cassidy
NAYES:	None
ABSTAIN:	Kathryn Ciesla, President
ABSENT:	Heather Ross, Trustee

/s/ Kathryn Ciesla
Village President

ATTEST:

/s/ Derek Gau
Village Clerk

INTERGOVERNMENTAL AGREEMENT BETWEEN THE VILLAGE OF WHEELING AND THE VILLAGE OF NORTHBROOK

THIS INTERGOVERNMENTAL AGREEMENT (***"Agreement"***) is made and entered into as of the ___ day of _____, 2025 (***"Effective Date"***), and is by and between the Village of Wheeling, an Illinois home rule municipality (***"Wheeling"***), and the Village of Northbrook, an Illinois home rule municipal corporation (***"Northbrook"***) (collectively, Wheeling and Northbrook are the ***"Parties"***).

IN CONSIDERATION OF the agreements set forth in this Agreement, the receipt and sufficiency of which are mutually acknowledged, and pursuant to the Wheeling's and Northbrook's statutory and home rule powers, the Parties agree as follows:

SECTION 1. RECITALS.

A. Article VII, Section 10 of the Illinois Constitution and the Intergovernmental Cooperation Act, 5 ILCS 220/1 *et seq.,* authorize and encourage intergovernmental cooperation.

B. The Parties were identified to receive grant funds for the purchase and sharing of public safety equipment, specifically the purchase of rapid response equipment.

C. Northbrook has been identified by the State of Illinois Department of Commerce and Economic Opportunity in Agreement No. 25-203353 ("***Grant Agreement***") as the Grantee. As Grantee, Northbrook will purchase the public safety equipment in an amount up to the grant award of $500,000. This public safety equipment will include rapid response barrier system and associated equipment/trailers, a fire response utility task vehicle and associated equipment/trailer, and trailer mounted solar powered changeable message boards (collectively the "***Public Safety Equipment***").

D. Northbrook will serve as owner of this Public Safety Equipment in accordance with the terms and conditions of the Grant Agreement. Wheeling will be responsible for storing this Public Safety Equipment. As owner, Northbrook will title and insure the Public Safety Equipment.

E. The Parties desire to enter into this Agreement in order to set forth their roles, responsibilities and obligations with respect tot the Public Safety Equipment.

SECTION 2. RESPONSIBILITY OF EACH PARTY.

A. Northbrook shall serve as the lead agency and be responsible for the execution of the Grant Agreement with the State of Illinois and the subsequent purchase of the Public Safety Equipment. Wheeling shall cooperate with Northbrook, as necessary, in order to allow Northbrook to complete the purchase of the Public Safety Equipment.

B. Wheeling shall be responsible for the storage of the Public Safety Equipment within its facilities, buildings or property. Wheeling shall ensure that the Public Safety Equipment is kept in a safe, secure and enclosed facility. Wheeling must provide Northbrook with reasonable access to the equipment and shall not deny Northbrook entry to its facilities to obtain the Public Safety Equipment for use by Northbrook.

C. The use, maintenance and operation of the Public Safety Equipment shall be governed by the requirements set forth in Appendix B to this Agreement.

D. Each Party represents that only capable, experienced and qualified personnel will operate and use the Public Safety Equipment.

E. At the conclusion of the term of the Grant Agreement, Northbrook will transfer ownership of the fire response utility task vehicle and associated equipment/trailers and trailer mounted solar powered changeable message boards to Wheeling. Following the term of the Grant Agreement and transfer of equipment from Northbrook to Wheeling, the Parties agree to continue to cooperate and share the Public Safety Equipment as may be necessary from time to time in accordance with this Agreement.

SECTION 3. ADMINISTRATION.

A. The Parties agree to work cooperatively to produce information as needed to meet the requirements of the Grant Agreement, including audits associated with the Grant Agreement.

B. The Parties agree to share information on maintenance and inspections of the Public Safety Equipment as may become necessary.

SECTION 4. REPAIRS.

A. Minor Repair. Each Party shall return all Public Safety Equipment promptly after use and in the same condition as when it was taken, except for ordinary wear and tear. Except for Significant Repairs as set forth below, each Party agrees to pay for any damage to, or repairs necessary for, the Public Safety Equipment that occurs while that Party is in possession or control of Public Safety Equipment, including all damage caused by a Party's employees, agents, contractors or volunteers. Neither Party may make any modifications or repairs to Public Safety Equipment without the prior written approval of the other Party.

B. Significant Repairs. The Parties agree to share equally in the cost of all significant repairs needed for the Public Safety Equipment to remain operational during the term of this Agreement. Significant repairs are those that are determined to be in excess of $5,000. If a significant repair is the result of an accident, the parties shall share equally in any cost that remains after any insurance reimbursement is deducted. As lead agency and owner of the Public Safety Equipment, Northbrook will make the final decision as to whether a repair is a significant repair. The party completing the significant repair will pay the cost and invoice the other party for 50% of the total cost of the significant repair. The other party must pay all amounts invoiced no later than 45 days after receiving the invoice.

SECTION 5. PUBLIC SAFETY EQUIPMENT PURCHASES.

A. Cooperation Regarding Public Safety Equipment Purchases. The Parties will cooperate regarding planning for, and purchasing of, Public Safety Equipment as well as supplies for the maintenance, use, and benefit of the Public Safety Equipment.

B. Consensus on Purchase of Public Safety Equipment. The Parties will cooperate on the specifications of the Public Safety Equipment to be purchased in order to meet the needs of the Parties while also remaining within the awarded grant amount.

C. Use of Joint Purchasing Contracts. The Parties agree that use of joint purchasing contracts that meet the purchasing requirements of the Grant Agreement are acceptable and in the best interests of the parties in order to meet the timelines established in the Grant Agreement.

D. If the Parties cannot agree on the selection or purchase of the Public Safety Equipment within six months after the effective date of this Agreement, Northbrook, as the lead agency, will make the final determination as to what Public Safety Equipment to purchase.

SECTION 6 COMPLIANCE WITH GRANT.

A. The Act. The Parties will, at all times, operate in compliance with the Grant Agreement, as it may be amended from time to time.

B. Other Laws, Ordinances, and Regulations. It is the responsibility of the Parties to comply with all applicable federal, state, and local laws, orders, rules, and regulations, as they may be modified or amended from time to time as it applies to the maintenance, operation, and ownership of the public safety equipment in accordance with Grant No. 25-203353.

SECTION 7. INSURANCE; WAIVER OF LIABILITY; INDEMNITY.

A. Insurance. As owners of the Public Safety Agreement for the duration of the period outlined in the Grant Agreement, Northbrook shall title and insure the Public Safety Equipment. Upon transfer of some or all of the Public Safety Equipment the Wheeling shall become responsible for titling and insuring that Public Safety Equipment.

B. Assumption of Liability. The Parties assume any and all liability arising from the use of public safety equipment and supplies used for their respective purposes or operations as allowed under this Agreement.

C. Indemnification. The Parties will indemnify, hold harmless, and defend each other against all damages, liability, claims, losses, and expenses (including attorneys' fees) that may arise, or be alleged to have arisen, out of or in connection with: (i) the use of Public Safety Equipment for their operations; (ii) this Agreement.

D. No Waiver of Tort Immunity Defenses. Nothing contained in this Agreement is or will be deemed to be a waiver of the defenses available to the Parties under the Illinois Local Governmental and Governmental Employees Tort Immunity Act, 745 ILCS 10/1-101 *et seq.,* with respect to claims by third parties.

E. Responsibility for Damage or Loss. The Parties will be responsible and liable for, and must promptly and without charge to the other, repair or replace, damage done to, and any loss or injury (collectively, ***"Loss"***) suffered by, the Public Safety Equipment to the extent the Loss arises out of the acts or omissions of the party using the Public Safety Equipment.

F. Responsibility for Delay. The Parties may not hold each other liable for any delays in the procurement or receipt of Public Safety Equipment purchases, parts, or repairs that may be due to compliance with the terms of this Agreement.

SECTION 8. TERM; TERMINATION.

A. Term. The term of this Agreement is for one year after the date on which the Agreement is fully executed (***"Term"***) and will automatically renew for successive one-year renewal terms unless terminated in accordance with this Agreement.

B. Termination. Either Party may terminate this Agreement with or without cause by

providing 180 days' prior written notice to the other Party. If Wheeling terminates this Agreement prior to the transfer of ownership of the Public Safety Equipment, Northbrook will retain ownership of all Public Safety Equipment and Wheeling shall cooperate to transfer possession of the Public Safety Equipment to Northbrook.

SECTION 9. ENFORCEMENT. The Parties to this Agreement may, in law or in equity, by suit, action, mandamus, or any other proceeding, including without limitation specific performance, enforce or compel the performance of this Agreement; provided, however, that the Parties agree that each will not seek, and do not have the right to seek, to recover a judgment for monetary damages against the Wheeling or Northbrook, or any of its elected or appointed officials, officers, employees, agents, representatives, or attorneys, on account of the negotiation, execution, or breach of this Agreement or on an account of a tort committed by Wheeling or Northbrook except for claims based on gross negligence or willful misconduct on the part of the Wheeling or Northbrook. In the event of a judicial proceeding brought by one Party to this Agreement against the other Party to this agreement, the successful Party shall be entitled to reimbursement from the unsuccessful party of all costs and expenses, including without limitation reasonable attorneys' fees, incurred in connection with the judicial proceeding.

SECTION 10. GENERAL PROVISIONS.

A. Binding Agreement. This Agreement is binding on and will inure to the benefit of the Parties, and their respective successors and assigns.

B. Amendments and Modifications. No amendment or modification to this Agreement will be effective until it is reduced to writing and approved and executed by the Parties to this Agreement.

C. Governing Laws; Venue. This Agreement will be governed by, construed, and enforced in accordance with the laws of the State of Illinois. Exclusive jurisdiction with regard to the any actions or proceedings arising from, relating to, or in connection with this Agreement will be in Cook County, Illinois.

D. Authority to Execute. The Parties warrant and represent that the persons executing this Agreement on their behalf have been properly authorized to do so.

E. Interpretation. This Agreement will be construed without regard to the identity of the Party who drafted the various provisions of this Agreement. Moreover, each and every provision of this Agreement will be construed as though all Parties participated equally in the drafting of this Agreement. As a result of the foregoing, any rule of construction that a document is to be construed against the drafting Party will not be applicable to this Agreement.

F. Rights Cumulative. Unless expressly provided to the contrary in this Agreement, each and every one of the rights, remedies, and benefits provided by this Agreement will be cumulative and will not be exclusive of any other rights, remedies, and benefits allowed by law.

G. No Third-Party Beneficiaries. No claim as a third-party beneficiary under this Agreement by any person, firm, or corporation will be made, or be valid, against the Parties.

H. Entire Agreement. It is understood and agreed that all understandings and agreements between the Parties are merged in this Agreement and neither Party is relying upon any statement or representation, not embodied in this Agreement.

I. Assignment. This Agreement cannot be assigned by any Party without the written consent of the other Party and should any assignment be made by one Party without the written consent of the other Party, such assignment will be null and void.

J. Notices. Any notice required to be given under this Agreement must be in writing and must be delivered (i) personally, (ii) by a reputable overnight courier, (iii) by certified mail, return receipt requested, and deposited in the U.S. Mail, postage prepaid, or (iv) by email. Email notices will be deemed valid and received by the addressee only upon explicit or implicit acknowledgment of receipt by the addressee. Unless otherwise expressly provided in this Agreement, notices will be deemed received upon the earlier of (a) actual receipt; (b) one business day after deposit with an overnight courier as evidenced by a receipt of deposit; or (c) three business days following deposit in the U.S. mail, as evidenced by a return receipt. By notice complying with the requirements of this Section 8.J, each party will have the right to change the address or the addressee, or both, for all future notices to the other party, but no notice of a change of addressee or address will be effective until actually received.

To Northbrook: Cara Pavlicek, Village Manager
Village of Northbrook
1225 Cedar Lane
Northbrook, IL 60062
cara.pavlicek@northbrook.il.us

With a copy to:
Kelly Hamill, Director of Public Works
Village of Northbrook
1225 Cedar Lane
Northbrook, IL 60062
kelly.hamill@northbrook.il.us

With a copy to:
Elrod Friedman LLP
350 N. Clark Street, Second Floor
Chicago, Illinois 60654
Attention: Steven Elrod
E-mail: steve.elrod@elrodfriedman.com

To Northbrook: Jon Sfondilis, Village Manager
Village of Wheeling
2 Community Blvd.
Wheeling, IL 60090
jsfondilis@wheelingil.gov

With a copy to:
Dan Kaup, Deputy Village Manager/Director of Public Works
Village of Wheeling
2 Community Blvd.
Wheeling, IL 60090
dkaup@wheelingil.gov

With a copy to:
Klein, Thorpe and Jenkins

544 Lakeview Parkway, Suite 301
Vernon Hills, Illinois 60061
Attention: James Ferolo
Email: jvferolo@ktjlaw.com

K. Counterpart Signatures. For the convenience of the Parties, this Agreement may be executed in counterparts, each counterpart will be deemed an original instrument, and such counterparts taken together will constitute one and the same Agreement.

L. Severability. The provisions of this Agreement will be interpreted when possible to sustain their legality and enforceability as a whole. In the event any provision of this Agreement is held invalid, illegal, or unenforceable by a court of competent jurisdiction, in whole or in part, neither the validity of the remaining part of such provision, nor the validity of any other provisions of this Agreement will be in any way affected thereby.

The remainder of this page is intentionally left blank.

IN WITNESS WHEREOF, the Parties agree to the terms of this Agreement and set forth their signatures below:

ATTEST:

By: _____

Title: _____

VILLAGE OF WHEELING

By: _____

Its: _____

ATTEST:

By: _____

VILLAGE OF NORTHBROOK

By: _____

IN WITNESS WHEREOF, the Parties agree to the terms of this Agreement and set forth their signatures below:

ATTEST:

VILLAGE OF WHEELING

By:_____

Title:_____

By: _____

Its: _____

ATTEST:

VILLAGE OF NORTHBROOK

By: _____

VILLAGE OF NORTHBROOK CORPORATE SEAL COOK COUNTY, ILL.

By: _____

Appendix A

Village of Northbrook

Bill of Sale

KNOW ALL BY THESE PRESENTS, that the **VILLAGE OF NORTHBROOK** ("***Grantor***"), in consideration of Ten and no/100 Dollars ($10.00) and other consideration, the sufficiency and receipt of which are hereby acknowledged, does hereby sell, assign, transfer and set over to the **VILLAGE OF WHEELING,** an Illinois municipal corporation, with its principal place of business at 2 Community Boulevard, Wheeling, IL 60090 ("***Grantee***"), the following described personal property (collectively "***Personal Property***"):

[INSERT DESCRIPTION]

The Grantor represents and warrants to the Grantee that the Grantor is the absolute owner of the Personal Property, that all of the Personal Property is free and clear of all liens, charges and encumbrances, and that the Grantor has full right, power and authority to sell and transfer the Personal Property and to make this Bill of Sale.

The Grantor acknowledges that, upon this sale and transfer, the Grantee will be the sole and absolute owner of the Personal Property, and will have the right to use the Personal Property in any manner it deems appropriate, including, without limitation, affixing the Personal Property to posts and other fixtures owned by the Grantee and located on public property and public rights-of-way, for public viewing and display.

If this Bill of Sale is signed by more than one Grantor, all persons so signing shall be jointly and severally bound hereby.

[SIGNATURE PAGE FOLLOWS]

IN WITNESS WHEREOF, Grantor has signed and sealed this bill of sale at _____, this _____ day of _____, 20__.

GRANTOR: Village of Northbrook

By:_____

Print Name:_____

As Its:_____

ACKNOWLEDGEMENT OF RECEIPT

Grantee does hereby acknowledge receipt of the Personal Property transferred by this Bill of Sale.

GRANTEE: Village of Wheeling

By: _____

Date: _____

NOTARIZATION OF GRANTOR'S SIGNATURE

STATE OF ILLINOIS)
) ss:
COUNTY OF COOK)

The foregoing instrument was acknowledged before me on _____, 20__, by _____, _____, who are known to me to be the persons who signed the foregoing instrument as the Grantor, and that they executed and attested to the same as their free and voluntary act and deed, and as the free and voluntary act and deed of the corporation, for the uses and purposes therein mentioned.

_____
Notary Public

SEAL

My Commission expires: _____

#55556466_v2

Appendix B

Equipment Information and Responsibilities

The following sections are intended to outline the use and maintenance of the Public Safety Equipment purchased under the Grant Agreement.

Section 1. Rapid Response Barrier System

Description: The rapid response barrier system shall consist of Archer 1200 Barriers, Archer Rapid Gate Kit, 3 Channel ADA Cable Protector, Archer Arrestor Cable, Archer Field Tow Bar, Archer Manual Hauler 2.0, Archer T-1000 Drop Deck Trailer. The final quantities of these materials shall be determined at the time of award issuance of a purchase order.

Storage of Equipment: Equipment shall be stored at 77 Hintz Road, Wheeling, Illinois, commonly known as the Village of Wheeling Public Works facility. Equipment may be stored inside or outside as deemed necessary.

Access to/Sharing of Units: If not being used by a community, the rapid response barrier system stored at Wheeling will be made available, regardless of time or day. The community requesting access to the units will provide as much notice as practicable, but both communities recognize that in the case of emergency this may not be possible. Communities will make their best efforts to pick-up and return the units during regular working hours, but both communities will respond after hours if necessary. Each community will be responsible for their own labor costs to make the units available.

Requests for access to and communication on use of the rapid response barrier system shall be handled through the Directors of Public Works for each community or their designee. Should a conflict arise between the use of the equipment, the issue will be escalated to the office of the Village Manager for each Community to be resolved.

Inspections: The Parties will conduct inspections of the equipment before and after use. Any repairs or deficiencies shall be notified with the other community and repairs scheduled.

Contacts: The Parties will share and update contacts for access to the units as needed but not less than annually.

Purchasing – Northbrook will procure the barriers and trailers in accordance with the requirements and the Grant Agreement.

Registration and Titling of Units: The trailers associated with the rapid response barrier system shall be titled and registered with the State of Illinois with the Village of Northbrook as owner.

Insurance: As owner, the Village of Northbrook will include and provide the same insurance as comparable trailers in Northbrook's fleet. The barrier system and accessories shall be insured in a manner similar to other Village equipment.

Indemnification: Wheeling agrees to indemnify and hold harmless Northbrook, IRMA, and the agents of both organizations for any acts that may occur while the barriers or associated equipment are used by Wheeling.

Repairs – Routine maintenance of the trailers and barriers will be performed after each use by the community using the trailers and equipment. Repairs totaling more than $5,000 will be shared between the community but only after concurrence between the two communities.

End of Useful Life – At any time if a repair exceeds the current value of the unit, the unit shall be determined to have reached the end of its useful life.

Disposal of Equipment – If/when the unit has reached the end of its useful life, the unit shall be disposed of in accordance with the terms of the Grant Agreement.

Section 2: Fire Response Utility Task Vehicle

Description: The Fire Response Utility Task Vehicle (UTV) shall consist of a Polaris Ranger XD 1500 NorthStar with a Fire and Rescue Skid in the back. In conjunction with the Fire Response UTV, a transport trailer shall also be furnished. The trailer and vehicle may have identification added to them identifying them as Village of Wheeling units. Wheeling will outfit the units with appropriate communications equipment and lights as needed.

Storage of Equipment: The Fire Response UTV and associated trailer shall be stored 499 South Milwaukee Avenue, commonly known as Village of Wheeling Fire Station 44. Equipment may be stored inside or outside as deemed necessary.

Access to/Sharing of Units – The Fire Response UTV shall be in the primary possession of the Village of Wheeling, if the Village of Northbrook requires the assistance of the Village of Wheeling Fire Department and the Fire Response UTV, the Village of Northbrook will activate the appropriate mutual aid systems to obtain assistance.

Contacts: The communities will share and update contacts for access to the units as needed but not less than annually.

Purchasing – The Village of Northbrook will procure the Fire Response UTV and the associated trailer in accordance with the requirements of the grant agreement and in accordance with the needs/specifications of the Village of Wheeling.

Registration and Titling of Units: Northbrook shall title and serve as owner of the Fire Response UTV and associated trailer for the duration of the Grant Agreement. If after the Grant Agreement is completed and Fire Response UTV is transferred to Wheeling in accordance with this agreement, Wheeling shall be the owner of the UTV and trailer. Wheeling agrees to continue to abide by any and all remaining Grant Agreement terms and conditions for the life of the Fire Response UTV.

Transfer of Units: At a time permitted by the Grant Agreement, Northbrook will transfer the Fire Response UTV in accordance with the terms of the Grant Agreement and this Agreement. The Bill of Sale identified in Appendix A of this Agreement shall be used.

If at that time, Wheeling chooses not to accept the unit, Northbrook may relocate the unit to one of their Fire Stations for use and storage. At that time, Northbrook may update communications equipment and identifications on the trailer and Fire Response UTV.

Repairs: Repairs and maintenance of the units shall be the responsibility of Wheeling.

End of Useful Life: At any time if a repair exceeds the current value of the unit, the unit shall be determined to have reached the end of its useful life.

Replacement: at the end of the units lives this portion of the agreement shall become null and void and shall not extend to any future replacements unless mutually agreed to by the Parties.

Insurance: Northbrook shall insure the units in a manner similar to equivalent equipment in its fleet until such time as the vehicle is transferred.

Indemnification: Wheeling agrees to indemnify and hold harmless Northbrook, IRMA, and the agents of both organizations for any acts that may occur while the trailers are used by Wheeling.

Disposal of Equipment: If/when the unit has reached the end of its useful life, the unit shall be disposed of in accordance with the terms of the Grant Agreement.

Section 3: Trailer Mounted Solar Powered Message Boards

Description: These shall consist of trailer mounted solar powered LED message boards ("***Message Boards***"). The final quantities of this equipment shall be determined at the time of award issuance of a purchase order.

Storage of Equipment: Equipment shall be stored at 77 Hintz Road, Wheeling, Illinois, commonly known as the Village of Wheeling Public Works facility. Equipment may be stored inside or outside as deemed necessary.

Access to/Sharing of Units: If not being used by a community, Wheeling will make available some or all of the message boards stored at their facility, regardless of time or day. The community requesting access to the units will provide as much notice as practicable, but both communities recognize that in the case of emergency this may not be possible. Communities will make their best efforts to pick-up and return the units during regular working hours, but both communities will respond after hours if necessary. Each community will be responsible for their own labor costs to make the units available.

Requests for access to and communication on use of the rapid response barrier system shall be handled through the Directors of Public Works for each community or their designee. Should a conflict arise between the use of the equipment, the issue will be escalated to the office of the Village Manager for each Community to be resolved.

Inspections: The Parties will conduct inspections of the Message Boards before and after use. Any repairs or deficiencies shall be notified with the other community and repairs scheduled.

Contacts: The Parties will share and update contacts for access to the units as needed but not less than annually.

Purchasing – Northbrook will procure the Message Boards in accordance with the requirements and the Grant Agreement.

Registration and Titling of Units: The Message Boards shall be titled and registered with the State of Illinois with the Village of Northbrook as owner for the duration of the Grant Agreement. If after the Grant Agreement is completed and Message Boards are transferred to Wheeling in accordance with this agreement, Wheeling shall be the owner of the Message Boards. Wheeling agrees to continue to abide by any and all remaining Grant Agreement terms and conditions for the life of the Message Boards.

Transfer of Units: At a time permitted by the Grant Agreement, Northbrook will transfer the Fire Response

UTV in accordance with the terms of the Grant Agreement and this Agreement. The Bill of Sale identified in Appendix A of this Agreement shall be used.

If at that time, Wheeling chooses not to accept the unit, Northbrook may relocate the unit to its Public Works Center for use and storage. At that time, Northbrook may update identifications on the trailer.

Repairs – Routine maintenance of the trailers and barriers will be performed after each use by the community using the trailers and equipment. Repairs totaling more than $5,000 will be shared between the community but only after concurrence between the two communities.

End of Useful Life – At any time if a repair exceeds the current value of the unit, the unit shall be determined to have reached the end of its useful life.

Replacement: at the end of the Message Boards lives this portion of the agreement shall become null and void and shall not extend to any future replacements unless mutually agreed to by the Parties.

Insurance: Northbrook shall insure the units in a manner similar to equivalent equipment in its fleet until such time as the vehicle is transferred.

Indemnification: Wheeling agrees to indemnify and hold harmless Northbrook, IRMA, and the agents of both organizations for any acts that may occur while the Message Boards are used by Wheeling.

Disposal of Equipment – If/when the Message Boards have reached the end of their useful life, the units shall be disposed of in accordance with the terms of the Grant Agreement.

Section 4: Additional Equipment and Resources

Description: Additional equipment and resources may be added to this Agreement as necessary upon mutual agreement of the Parties.

Resolution 2025-R-165

BE IT RESOLVED by the President and Board of Trustees of the Village of Northbrook, County of Cook and State of Illinois, THAT:

A Resolution Authorizing the Execution of a Grant Agreement with the State of Illinois' Department of Commerce and Economic Opportunity in the Amount of $500,000 for the Purchase of a Rapid Response Traffic Barrier System, a Fire Response Utility Task Vehicle (UTV), and LED Message Boards

is hereby adopted, as follows:

Section 1. RECITALS

The Village of Northbrook has received a grant from the State of Illinois' Department of Commerce and Economic Opportunity in the amount of $500,000. This grant will reimburse the Village for the purchase of public safety resources including a rapid response traffic barrier system, a fire response utility task vehicle (UTV) and LED message boards. While the Village of Northbrook is the grant awardee, these resources will be shared with the Village of Wheeling.

The Village of Northbrook and the Village of Wheeling will enter into an Intergovernmental Agreement outlining the shared nature of these resources and responsibilities for their use and maintenance that will be considered separately by the Board. Additionally, the purchases themselves will be brought to future meetings for the Board's consideration.

To receive the grant funds from the State of Illinois, the Village must enter into a grant agreement ("***Agreement***") with the State of Illinois' Department of Commerce and Economic Opportunity. This Agreement outlines the terms and conditions of the grant and is included as ***Exhibit A*** to this Resolution. The Village of Northbrook has budgeted funds in account 11-2100-705-31 for these public safety purchases.

The President and the Board of Trustees have considered the Agreement and determined that it is in the best interests of the Village and the public to enter into the Agreement with the State.

Section 2. APPROVAL OF AGREEMENT

The Agreement with the State is approved in substantially the form attached as ***Exhibit A*** and in a form acceptable to the Village Manager and the Village Attorney.

Section 3. AUTHORIZATION TO EXECUTE AGREEMENT

The Village President and Village Manager shall be, and are hereby, authorized and directed to execute and seal, on behalf of the Village, the Agreement and any other documents necessary to complete the Village's obligations under the Agreement.

Approved: 10/14/25

RESULT:	**APPROVED [5 – 0]**
MOVER:	Robert Israel, Trustee
SECONDER:	Joy Ebhomielen, Trustee
AYES:	Israel, Hebl, Ebhomielen, Kohler, Cassidy
NAYES:	None
ABSTAIN:	Kathryn Ciesla, President
ABSENT:	Heather Ross, Trustee

/s/ Kathryn Ciesla
Village President

ATTEST:

/s/ Derek Gau
Village Clerk

GRANT AGREEMENT
BETWEEN
THE STATE OF ILLINOIS, DEPARTMENT OF COMMERCE AND ECONOMIC OPPORTUNITY
AND
Village of Northbrook

The parties to this Grant Agreement (Agreement) are the State of Illinois (State), acting through the undersigned agency (Grantor) and Village of Northbrook (Grantee) (collectively, the "Parties" and individually, a "Party"). The Agreement, consisting of the signature page, the parts listed below, and any additional exhibits or attachments referenced in this Agreement, constitute the entire agreement between the Parties. No promises, terms, or conditions not recited, incorporated or referenced herein, including prior agreements or oral discussions, are binding upon either Grantee or Grantor.

PART ONE – The Uniform Terms

Article I	**Definitions**
Article II	**Award Information**
Article III	**Grantee Certifications and Representations**
Article IV	**Payment Requirements**
Article V	**Scope of Award Activities/Purpose of Award**
Article VI	**Budget**
Article VII	**Allowable Costs**
Article VIII	**Lobbying**
Article IX	**Maintenance and Accessibility of Records; Monitoring**
Article X	**Financial Reporting Requirements**
Article XI	**Performance Reporting Requirements**
Article XII	**Audit Requirements**
Article XIII	**Termination; Suspension; Non-compliance**
Article XIV	**Subcontracts/Subawards**
Article XV	**Notice of Change**
Article XVI	**Structural Reorganization and Reconstitution of Board Membership**
Article XVII	**Conflict of Interest**
Article XVIII	**Equipment or Property**
Article XIX	**Promotional Materials; Prior Notification**
Article XX	**Insurance**
Article XXI	**Lawsuits and Indemnification**
Article XXII	**Miscellaneous**
Exhibit A	**Project Description**
Exhibit B	**Deliverables or Milestones**
Exhibit C	**Contact Information**
Exhibit D	**Performance Measures and Standards**
Exhibit E	**Specific Conditions**

PART TWO – Grantor-Specific Terms

PART THREE – Project-Specific Terms

The Parties or their duly authorized representatives hereby execute this Agreement.

ILLINOIS DEPARTMENT OF COMMERCE AND ECONOMIC OPPORTUNITY

By: _____
Signature of Kristin A. Richards, Director

Date: _____

By: _____
Signature of Designee

Date: _____

Printed Name: _____

Printed Title: _____
Designee

By: _____
Signature of Second Grantor Approver, if applicable

Date: _____

Printed Name: _____

Printed Title: _____
Second Grantor Approver

By: _____
Signature of Third Grantor Approver, if applicable

Date: _____

Printed Name: _____

Printed Title: _____
Third Grantor Approver

VILLAGE OF NORTHBROOK

By: _____
Signature of Authorized Representative

Date: _____

Printed Name: Kathryn L Ciesla

Printed Title: Village President

Email: Kathryn.Ciesla@northbrook.il.us

By: _____
Signature of Second Grantee Approver, if applicable

Date: _____

Printed Name: _____

Printed Title: _____
Second Grantee Approver
(optional at Grantee's discretion)

PART ONE – THE UNIFORM TERMS

ARTICLE I
DEFINITIONS

1.1. Definitions. Capitalized words and phrases used in this Agreement have the meanings stated in 2 CFR 200.1 unless otherwise stated below.

"Allowable Costs" has the same meaning as in 44 Ill. Admin. Code 7000.30.

"Award" has the same meaning as in 44 Ill. Admin. Code 7000.30.

"Budget" has the same meaning as in 44 Ill. Admin. Code 7000.30.

"Catalog of State Financial Assistance" or "CSFA" has the same meaning as in 44 Ill. Admin. Code 7000.30.

"Close-out Report" means a report from the Grantee allowing Grantor to determine whether all applicable administrative actions and required work have been completed, and therefore closeout actions can commence.

"Conflict of Interest" has the same meaning as in 44 Ill. Admin. Code 7000.30.

"Cooperative Research and Development Agreement" has the same meaning as in 15 USC 3710a.

"Direct Costs" has the same meaning as in 44 Ill. Admin. Code 7000.30.

"Financial Assistance" has the same meaning as in 44 Ill. Admin. Code 7000.30.

"GATU" has the same meaning as in 44 Ill. Admin. Code 7000.30.

"Grant Agreement" has the same meaning as in 44 Ill. Admin. Code 7000.30.

"Grantee Compliance Enforcement System" has the same meaning as in 44 Ill. Admin. Code 7000.30.

"Grant Funds" means the Financial Assistance made available to Grantee through this Agreement.

"Grantee Portal" has the same meaning as in 44 Ill. Admin. Code 7000.30.

"Indirect Costs" has the same meaning as in 44 Ill. Admin. Code 7000.30.

"Indirect Cost Rate" means a device for determining in a reasonable manner the proportion of Indirect Costs each Program should bear. It is a ratio (expressed as a percentage) of the Indirect Costs to a Direct Cost base. If reimbursement of Indirect Costs is allowable under an Award, Grantor will not reimburse those Indirect Costs unless Grantee has established an Indirect Cost Rate covering the applicable activities and period of time, unless Indirect Costs are reimbursed at a fixed rate.

"Indirect Cost Rate Proposal" has the same meaning as in 44 Ill. Admin. Code 7000.30.

"Obligations" has the same meaning as in 44 Ill. Admin. Code 7000.30.

"Period of Performance" has the same meaning as in 44 Ill. Admin. Code 7000.30.

"Prior Approval" has the same meaning as in 44 Ill. Admin. Code 7000.30.

"Profit" means an entity's total revenue less its operating expenses, interest paid, depreciation, and taxes. "Profit" is synonymous with the term "net revenue."

"Program" means the services to be provided pursuant to this Agreement. "Program" is used interchangeably with "Project."

"Program Costs" means all Allowable Costs incurred by Grantee and the value of the contributions made by third parties in accomplishing the objectives of the Award during the Term of this Agreement.

"Related Parties" has the meaning set forth in Financial Accounting Standards Board (FASB) Accounting Standards Codification (ASC) 850-10-20.

"SAM" has the same meaning as in 44 Ill. Admin. Code 7000.30.

"State-issued Award" means the assistance that a grantee receives directly from a State agency. The funding source of the State-issued Award can be federal pass-through, State or a combination thereof. "State-issued Award" does not include the following:

contracts issued pursuant to the Illinois Procurement Code that a State agency uses to buy goods or services from a contractor or a contract to operate State government-owned, contractor-operated facilities;
agreements that meet the definition of "contract" under 2 CFR 200.1 and 2 CFR 200.331, which a State agency uses to procure goods or services but are exempt from the Illinois Procurement Code due to an exemption listed under 30 ILCS 500/1-10, or pursuant to a disaster proclamation, executive order, or any other exemption permitted by law;
amounts received for services rendered to an individual;
Cooperative Research and Development Agreements;
an agreement that provides only direct cash assistance to an individual;
a subsidy;
a loan;
a loan guarantee; or
insurance.

"Illinois Stop Payment List" has the same meaning as in 44 Ill. Admin. Code 7000.30.

"Unallowable Cost" has the same meaning as in 44 Ill. Admin. Code 7000.30.

"Unique Entity Identifier" or "UEI" has the same meaning as in 44 Ill. Admin. Code 7000.30.

ARTICLE II
AWARD INFORMATION

2.1. Term. This Agreement is effective on **08/01/2025** and expires on **06/30/2026** (the Term), unless terminated pursuant to this Agreement.

2.2. Amount of Agreement. Grant Funds must not exceed **$500,000.00**, of which **$0.00** are federal funds. Grantee accepts Grantor's payment as specified in this ARTICLE.

2.3. Payment. Payment will be made as follows (see additional payment requirements in ARTICLE IV; additional payment provisions specific to this Award may be included in **PART TWO** or **PART THREE**):

The Award amount listed in Paragraph 2.2 is not a guarantee of payment, and Grantee's receipt of Grant Funds is contingent upon all terms and conditions of this Agreement.

Reimbursement
Payments to the Grantee are subject to the Grantee's submission and certification of eligible costs and any documentation as required by the Grantor. Payment shall be initiated upon the Grantor's approval of eligible costs and cash amount requested for reimbursement of those costs.

2.4. Award Identification Numbers. If applicable, the Federal Award Identification Number (FAIN) is **N/A**, the federal awarding agency is **N/A**, and the Federal Award date is **N/A**. If applicable, the Assistance Listing Program Title is **N/A** and Assistance Listing Number is **N/A**. The Catalog of State Financial Assistance (CSFA) Number is 420-00-2725 and the CSFA Name is Provision of Services to the Public from Named Line GRF &/or FIF Source. If applicable, the State Award Identification Number (SAIN) is 2725-60280.

ARTICLE III
GRANTEE CERTIFICATIONS AND REPRESENTATIONS

3.1. Registration Certification. Grantee certifies that: (i) it is registered with SAM and **JY8VA8LVQJG5** is Grantee's correct UEI; (ii) it is in good standing with the Illinois Secretary of State, if applicable; and (iii) Grantee has successfully completed the annual registration and prequalification through the Grantee Portal.

Grantee must remain current with these registrations and requirements. If Grantee's status with regard to any of these requirements changes, or the certifications made in and information provided in the uniform grant application changes, Grantee must notify Grantor in accordance with ARTICLE XV.

3.2. Tax Identification Certification. Grantee certifies that: **366006017** is Grantee's correct federal employer identification number (FEIN) or Social Security Number. Grantee further certifies, if applicable: (a) that Grantee is not subject to backup withholding because (i) Grantee is exempt from backup withholding, or (ii) Grantee has not been notified by the Internal Revenue Service (IRS) that Grantee is subject to backup withholding as a result of a failure to report all interest or dividends, or (iii) the IRS has notified Grantee that Grantee is no longer subject to backup withholding; and (b) Grantee is a U.S. citizen or other U.S. person. Grantee is doing business as a (check one):

_____	Individual	_____	Pharmacy-Non Corporate
_____	Sole Proprietorship	_____	Pharmacy/Funeral Home/Cemetery Corp.
_____	Partnership	_____	Tax Exempt
_____	Corporation (includes Not For Profit)	_____	Limited Liability Company (select applicable tax classification)
_____	Medical Corporation		
X	Governmental Unit	_____	P = partnership
_____	Estate or Trust	_____	C = corporation

If Grantee has not received a payment from the State of Illinois in the last two years, Grantee must submit a W-9 tax form with this Agreement.

3.3. Compliance with Uniform Grant Rules. Grantee certifies that it must adhere to the applicable Uniform Administrative Requirements, Cost Principles, and Audit Requirements for Federal Awards, which are published in Title 2, Part 200 of the Code of Federal Regulations (2 CFR Part 200) and are incorporated herein by reference. 44 Ill. Admin. Code 7000.40(c)(1)(A). The requirements of 2 CFR Part 200 apply to the Grant Funds awarded through this Agreement, regardless of whether the original source of the funds is State or federal, unless an exception is noted in federal or State statutes or regulations. 30 ILCS 708/5(b).

3.4. Representations and Use of Funds. Grantee certifies under oath that (1) all representations made in this Agreement are true and correct and (2) all Grant Funds awarded pursuant to this Agreement must be used

only for the purpose(s) described herein. Grantee acknowledges that the Award is made solely upon this certification and that any false statements, misrepresentations, or material omissions will be the basis for immediate termination of this Agreement and repayment of all Grant Funds.

3.5. Specific Certifications. Grantee is responsible for compliance with the enumerated certifications in this Paragraph to the extent that the certifications apply to Grantee.

(a) **Bribery.** Grantee certifies that it has not been convicted of bribery or attempting to bribe an officer or employee of the State of Illinois, nor made an admission of guilt of such conduct which is a matter of record.

(b) **Bid Rigging.** Grantee certifies that it has not been barred from contracting with a unit of State or local government as a result of a violation of Paragraph 33E-3 or 33E-4 of the Criminal Code of 2012 (720 ILCS 5/33E-3 or 720 ILCS 5/33E-4, respectively).

(c) **Debt to State.** Grantee certifies that neither it, nor its affiliate(s), is/are barred from receiving an Award because Grantee, or its affiliate(s), is/are delinquent in the payment of any debt to the State, unless Grantee, or its affiliate(s), has/have entered into a deferred payment plan to pay off the debt.

(d) **International Boycott.** Grantee certifies that neither it nor any substantially owned affiliated company is participating or will participate in an international boycott in violation of the provision of the Anti-Boycott Act of 2018, Part II of the Export Control Reform Act of 2018 (50 USC 4841 through 4843), and the anti-boycott provisions set forth in Part 760 of the federal Export Administration Regulations (15 CFR Parts 730 through 774).

(e) **Discriminatory Club Dues or Fees.** Grantee certifies that it is not prohibited from receiving an Award because it pays dues or fees on behalf of its employees or agents, or subsidizes or otherwise reimburses employees or agents for payment of their dues or fees to any club which unlawfully discriminates (775 ILCS 25/2).

(f) **Pro-Children Act.** Grantee certifies that it is in compliance with the Pro-Children Act of 2001 in that it prohibits smoking in any portion of its facility used for the provision of health, day care, early childhood development services, education or library services to children under the age of eighteen (18) (except such portions of the facilities which are used for inpatient substance abuse treatment) (20 USC 7181-7184).

(g) **Drug-Free Workplace.** If Grantee is not an individual, Grantee certifies it will provide a drug free workplace pursuant to the Drug Free Workplace Act. 30 ILCS 580/3. If Grantee is an individual and this Agreement is valued at more than $5,000, Grantee certifies it will not engage in the unlawful manufacture, distribution, dispensation, possession, or use of a controlled substance during the performance of the Agreement. 30 ILCS 580/4. Grantee further certifies that if it is a recipient of federal pass-through funds, it is in compliance with the government-wide requirements for a drug-free workplace as set forth in 41 USC 8103.

(h) **Motor Voter Law.** Grantee certifies that it is in full compliance with the terms and provisions of the National Voter Registration Act of 1993 (52 USC 20501 et seq.).

(i) **Clean Air Act and Clean Water Act.** Grantee certifies that it is in compliance with all applicable standards, orders or regulations issued pursuant to the Clean Air Act (42 USC 7401 et seq.) and the Federal Water Pollution Control Act, as amended (33 USC 1251 et seq.).

(j) **Debarment.** Grantee certifies that it is not debarred, suspended, proposed for debarment or permanent inclusion on the Illinois Stop Payment List, declared ineligible, or voluntarily excluded from participation in this Agreement by any federal department or agency (2 CFR 200.205(a)), or by the State (30 ILCS 708/25(6)(G)).

(k) **Non-procurement Debarment and Suspension.** Grantee certifies that it is in compliance with Subpart C of 2 CFR Part 180 as supplemented by 2 CFR Part 376, Subpart C.

(l) **Health Insurance Portability and Accountability Act.** Grantee certifies that it is in compliance with the Health Insurance Portability and Accountability Act of 1996 (HIPAA) (Public Law No. 104-191, 45 CFR Parts 160, 162 and 164, and the Social Security Act, 42 USC 1320d-2 through 1320d-7), in that it may not use or disclose protected health information other than as permitted or required by law and agrees to use appropriate safeguards to prevent use or disclosure of the protected health information. Grantee must maintain, for a minimum of six (6) years, all protected health information.

(m) **Criminal Convictions.** Grantee certifies that:

(i) Neither it nor a managerial agent of Grantee (for non-governmental grantees only, this includes any officer, director or partner of Grantee) has been convicted of a felony under the Sarbanes-Oxley Act of 2002, nor a Class 3 or Class 2 felony under Illinois Securities Law of 1953, or that at least five (5) years have passed since the date of the conviction; and

(ii) It must disclose to Grantor all violations of criminal law involving fraud, bribery or gratuity violations potentially affecting this Award. Failure to disclose may result in remedial actions as stated in the Grant Accountability and Transparency Act. 30 ILCS 708/40. Additionally, if Grantee receives over $10 million in total federal Financial Assistance, during the period of this Award, Grantee must maintain the currency of information reported to SAM regarding civil, criminal or administrative proceedings as required by 2 CFR 200.113 and Appendix XII of 2 CFR Part 200, and 30 ILCS 708/40.

(n) **Federal Funding Accountability and Transparency Act of 2006 (FFATA).** Grantee certifies that it is in compliance with the terms and requirements of 31 USC 6101 with respect to Federal Awards greater than or equal to $30,000. A FFATA subaward report must be filed by the end of the month following the month in which the award was made.

(o) **Illinois Works Review Panel.** For Awards made for public works projects, as defined in the Illinois Works Jobs Program Act, Grantee certifies that it and any contractor(s) or subcontractor(s) that performs work using funds from this Award, must, upon reasonable notice, appear before and respond to requests for information from the Illinois Works Review Panel. 30 ILCS 559/20-25(d).

(p) **Anti-Discrimination.** Grantee certifies that its employees and subcontractors under subcontract made pursuant to this Agreement, must comply with all applicable provisions of State and federal laws and regulations pertaining to nondiscrimination, sexual harassment and equal employment opportunity including, but not limited to: Illinois Human Rights Act (775 ILCS 5/1-101 et seq.), including, without limitation, 44 Ill. Admin. Code 750- Appendix A, which is incorporated herein; Public Works Employment Discrimination Act (775 ILCS 10/1 et seq.); Civil Rights Act of 1964 (as amended) (42 USC 2000a - 2000h-6); Section 504 of the Rehabilitation Act of 1973 (29 USC 794); Americans with Disabilities Act of 1990 (as amended) (42 USC 12101 et seq.); and the Age Discrimination Act of 1975 (42 USC 6101 et seq.).

(q) Internal Revenue Code and Illinois Income Tax Act. Grantee certifies that it complies with all provisions of the federal Internal Revenue Code (26 USC 1), the Illinois Income Tax Act (35 ILCS 5),

and all regulations and rules promulgated thereunder, including withholding provisions and timely deposits of employee taxes and unemployment insurance taxes.

ARTICLE IV
PAYMENT REQUIREMENTS

4.1. Availability of Appropriation; Sufficiency of Funds. This Agreement is contingent upon and subject to the availability of sufficient funds. Grantor may terminate or suspend this Agreement, in whole or in part, without penalty or further payment being required, if (i) sufficient funds for this Agreement have not been appropriated or otherwise made available to Grantor by the State or the federal funding source, (ii) the Governor or Grantor reserves funds, or (iii) the Governor or Grantor determines that funds will not or may not be available for payment. Grantor must provide notice, in writing, to Grantee of any such funding failure and its election to terminate or suspend this Agreement as soon as practicable. Any suspension or termination pursuant to this Paragraph will be effective upon the date of the written notice unless otherwise indicated.

4.2. Pre-Award Costs. Pre-award costs are not permitted unless specifically authorized by Grantor in **Exhibit A**, **PART TWO** or **PART THREE** of this Agreement. If they are authorized, pre-award costs must be charged to the initial Budget Period of the Award, unless otherwise specified by Grantor. 2 CFR 200.458.

4.3. Return of Grant Funds. Grantee must liquidate all Obligations incurred under the Award within forty-five (45) days of the end of the Period of Performance, or in the case of capital improvement Awards, within forty-five (45) days of the end of the time period the Grant Funds are available for expenditure or obligation, unless Grantor permits a longer period in **PART TWO** OR **PART THREE**. Grantee must return to Grantor within forty-five (45) days of the end of the applicable time period as set forth in this Paragraph all remaining Grant Funds that are not expended or legally obligated.

4.4. Cash Management Improvement Act of 1990. Unless notified otherwise in **PART TWO** or **PART THREE**, Grantee must manage federal funds received under this Agreement in accordance with the Cash Management Improvement Act of 1990 (31 USC 6501 et seq.) and any other applicable federal laws or regulations. 2 CFR 200.305; 44 Ill. Admin. Code 7000.120.

4.5. Payments to Third Parties. Grantor will have no liability to Grantee when Grantor acts in good faith to redirect all or a portion of any Grantee payment to a third party. Grantor will be deemed to have acted in good faith when it is in possession of information that indicates Grantee authorized Grantor to intercept or redirect payments to a third party or when so ordered by a court of competent jurisdiction.

4.6. Modifications to Estimated Amount. If the Agreement amount is established on an estimated basis, then it may be increased by mutual agreement at any time during the Term. Grantor may decrease the estimated amount of this Agreement at any time during the Term if (i) Grantor believes Grantee will not use the funds during the Term, (ii) Grantor believes Grantee has used Grant Funds in a manner that was not authorized by this Agreement, (iii) sufficient funds for this Agreement have not been appropriated or otherwise made available to Grantor by the State or the federal funding source, (iv) the Governor or Grantor reserves funds, or (v) the Governor or Grantor determines that funds will or may not be available for payment. Grantee will be notified, in writing, of any adjustment of the estimated amount of this Agreement. In the event of such reduction, services provided by Grantee under **Exhibit A** may be reduced accordingly. Grantor must pay Grantee for work satisfactorily performed prior to the date of the notice regarding adjustment. 2 CFR 200.308.

4.7. Interest.

(a) All interest earned on Grant Funds held by a Grantee or a subrecipient will be treated in accordance with 2 CFR 200.305(b)(12), unless otherwise provided in **PART TWO** or **PART THREE**. Grantee

and its subrecipients must remit annually any amount due in accordance with 2 CFR 200.305(b)(12) or to Grantor, as applicable.

(b) Grant Funds must be placed in an insured account, whenever possible, that bears interest, unless exempted under 2 CFR 200.305(b)(10), (b)(11).

4.8. Timely Billing Required. Grantee must submit any payment request to Grantor within fifteen (15) days of the end of the quarter, unless another billing schedule is specified in ARTICLE II, **PART TWO**, or **PART THREE**. Failure to submit such payment request timely will render the amounts billed Unallowable Costs which Grantor cannot reimburse. In the event that Grantee is unable, for good cause, to submit its payment request timely, Grantee shall timely notify Grantor and may request an extension of time to submit the payment request. Grantor's approval of Grantee's request for an extension shall not be unreasonably withheld.

4.9. Certification. Pursuant to 2 CFR 200.415, each invoice and report submitted by Grantee (or subrecipient) must contain the following certification by an official authorized to legally bind Grantee (or subrecipient):

> By signing this report [or payment request or both], I certify to the best of my knowledge and belief that the report [or payment request] is true, complete, and accurate; that the expenditures, disbursements and cash receipts are for the purposes and objectives set forth in the terms and conditions of the State or federal pass-through award; and that supporting documentation has been submitted as required by the grant agreement. I acknowledge that approval for any other expenditure described herein is considered conditional subject to further review and verification in accordance with the monitoring and records retention provisions of the grant agreement. I am aware that any false, fictitious, or fraudulent information, or the omission of any material fact, may subject me to criminal, civil or administrative penalties for fraud, false statements, false claims or otherwise (U.S. Code Title 18, Sections 2, 1001, 1343 and Title 31, Sections 3729-3730 and 3801-3812; 30 ILCS 708/120).

ARTICLE V
SCOPE OF AWARD ACTIVITIES/PURPOSE OF AWARD

5.1. Scope of Award Activities/Purpose of Award. Grantee must perform as described in this Agreement, including as described in **Exhibit A** (Project Description), **Exhibit B** (Deliverables or Milestones), and **Exhibit D** (Performance Measures and Standards), as applicable. Grantee must further comply with all terms and conditions set forth in the Notice of State Award (44 Ill. Admin. Code 7000.360) which is incorporated herein by reference. All Grantor-specific provisions and programmatic reporting required under this Agreement are described in **PART TWO** (Grantor-Specific Terms). All Project-specific provisions and reporting required under this Agreement are described in **PART THREE** (Project-Specific Terms).

5.2. Scope Revisions. Grantee must obtain Prior Approval from Grantor whenever a scope revision is necessary for one or more of the reasons enumerated in 44 Ill. Admin. Code 7000.370(b)(2). All requests for scope revisions that require Grantor approval must be signed by Grantee's authorized representative and submitted to Grantor for approval. Expenditure of funds under a requested revision is prohibited and will not be reimbursed if expended before Grantor gives written approval. 2 CFR 200.308.

5.3. Specific Conditions. If applicable, specific conditions required after a risk assessment are included in **Exhibit E**. Grantee must adhere to the specific conditions listed therein. 44 Ill. Admin. Code 7000.340(e).

ARTICLE VI

BUDGET

6.1. Budget. The Budget submitted by Grantee at application, or a revised Budget subsequently submitted and approved by Grantor, is considered final and is incorporated herein by reference.

6.2. Budget Revisions. Grantee must obtain Prior Approval, whether mandated or discretionary, from Grantor whenever a Budget revision is necessary for one or more of the reasons enumerated in 44 Ill. Admin. Code 7000.370(b). All requests for Budget revisions that require Grantor approval must be signed by Grantee's authorized representative and submitted to Grantor for approval. Expenditure of funds under a requested revision is prohibited and will not be reimbursed if expended before Grantor gives written approval.

6.3. Notification. Within thirty (30) calendar days from the date of receipt of the request for Budget revisions, Grantor will review the request and notify Grantee whether the Budget revision has been approved, denied, or the date upon which a decision will be reached. 44 Ill. Admin. Code 7000.370(b)(7).

ARTICLE VII
ALLOWABLE COSTS

7.1. Allowability of Costs; Cost Allocation Methods. The allowability of costs and cost allocation methods for work performed under this Agreement will be determined in accordance with 2 CFR Part 200 Subpart E and Appendices III, IV, V, and VII.

7.2. Indirect Cost Rate Submission.

(a) All grantees, except for Local Education Agencies (as defined in 34 CFR 77.1), must make an Indirect Cost Rate election in the Grantee Portal, even grantees that do not charge or expect to charge Indirect Costs. 44 Ill. Admin. Code 7000.420(e).

(i) Waived and de minimis Indirect Cost Rate elections will remain in effect until Grantee elects a different option.

(b) Grantee must submit an Indirect Cost Rate Proposal in accordance with federal and State regulations, in a format prescribed by Grantor. For grantees who have never negotiated an Indirect Cost Rate before, the Indirect Cost Rate Proposal must be submitted for approval no later than three months after the effective date of the Award. For grantees who have previously negotiated an Indirect Cost Rate, the Indirect Cost Rate Proposal must be submitted for approval within 180 days of Grantee's fiscal year end, as dictated in the applicable appendices, such as:

(i) Appendix VII to 2 CFR Part 200 governs Indirect Cost Rate Proposals for state and Local Governments and Indian Tribes,

(ii) Appendix III to 2 CFR Part 200 governs Indirect Cost Rate Proposals for public and private institutions of higher education,

(iii) Appendix IV to 2 CFR Part 200 governs Indirect (F&A) Costs Identification and Assignment, and Rate Determination for Nonprofit Organizations, and

(iv) Appendix V to 2 CFR Part 200 governs state/Local Government-wide Central Service Cost Allocation Plans.

(c) A grantee who has a current, applicable rate negotiated by a cognizant federal agency must provide to Grantor a copy of its Indirect Cost Rate acceptance letter from the federal government and a copy of all documentation regarding the allocation methodology for costs used to negotiate that rate, e.g., without limitation, the cost policy statement or disclosure narrative statement. Grantor will accept that Indirect Cost Rate, up to any statutory, rule-based or programmatic limit.

(d) A grantee who does not have a current negotiated rate, may elect to charge a *de minimis* rate up to 15 percent of modified total direct costs, which may be used indefinitely. No documentation is required to justify the *de minimis* Indirect Cost Rate. 2 CFR 200.414(f).

7.3. Transfer of Costs. Cost transfers between Grants, whether as a means to compensate for cost overruns or for other reasons, are unallowable. 2 CFR 200.451.

7.4. Commercial Organization Cost Principles. The federal cost principles and procedures for cost analysis and the determination, negotiation and allowance of costs that apply to commercial organizations are set forth in 48 CFR Part 31.

7.5. Financial Management Standards. The financial management systems of Grantee must meet the following standards:

(a) **Accounting System.** Grantee organizations must have an accounting system that provides accurate, current, and complete disclosure of all financial transactions related to each state- and federally-funded Program. Accounting records must contain information pertaining to State and federal pass-through awards, authorizations, Obligations, unobligated balances, assets, outlays, and income. These records must be maintained on a current basis and balanced at least quarterly. Cash contributions to the Program from third parties must be accounted for in the general ledger with other Grant Funds. Third party in-kind (non-cash) contributions are not required to be recorded in the general ledger, but must be under accounting control, possibly through the use of a memorandum ledger. To comply with 2 CFR 200.305(b)(9) and 30 ILCS 708/97, Grantee must use reasonable efforts to ensure that funding streams are delineated within Grantee's accounting system. 2 CFR 200.302.

(b) **Source Documentation.** Accounting records must be supported by such source documentation as canceled checks, bank statements, invoices, paid bills, donor letters, time and attendance records, activity reports, travel reports, contractual and consultant agreements, and subaward documentation. All supporting documentation must be clearly identified with the Award and general ledger accounts which are to be charged or credited.

(i) The documentation standards for salary charges to Grants are prescribed by 2 CFR 200.430, and in the cost principles applicable to the Grantee's organization.

(ii) If records do not meet the standards in 2 CFR 200.430, then Grantor may notify Grantee in **PART TWO**, **PART THREE** or **Exhibit E** of the requirement to submit personnel activity reports. 2 CFR 200.430(g)(8). Personnel activity reports must account on an after-the-fact basis for one hundred percent (100%) of the employee's actual time, separately indicating the time spent on the Award, other grants or projects, vacation or sick leave, and administrative time, if applicable. The reports must be signed by the employee, approved by the appropriate official, and coincide with a pay period. These time records must be used to record the distribution of salary costs to the appropriate accounts no less frequently than quarterly.

(iii) Formal agreements with independent contractors, such as consultants, must include a description of the services to be performed, the period of performance, the fee and method of payment, an itemization of travel and other costs which are chargeable to the agreement, and the signatures of both the contractor and an appropriate official of Grantee.

(iv) If third party in-kind (non-cash) contributions are used for Award purposes, the valuation of these contributions must be supported with adequate documentation.

(c) **Internal Control.** Grantee must maintain effective control and accountability for all cash, real and personal property, and other assets. Grantee must adequately safeguard all such property and must provide assurance that it is used solely for authorized purposes. Grantee must also have systems in place that provide reasonable assurance that the information is accurate, allowable, and compliant with the terms and conditions of this Agreement. 2 CFR 200.303.

(d) **Budget Control**. Grantee must maintain records of expenditures for each Award by the cost categories of the approved Budget (including Indirect Costs that are charged to the Award), and actual expenditures are to be compared with budgeted amounts at least quarterly.

(e) **Cash Management.** Requests for advance payment must be limited to Grantee's immediate cash needs. Grantee must have written procedures to minimize the time elapsing between the receipt and the disbursement of Grant Funds to avoid having excess funds on hand. 2 CFR 200.305.

7.6. Profits. It is not permitted for any person or entity to earn a Profit from an Award. See, e.g., 2 CFR 200.400(g); see also 30 ILCS 708/60(a)(7).

7.7. Management of Program Income. Grantee is encouraged to earn income to defray Program Costs where appropriate, subject to 2 CFR 200.307.

ARTICLE VIII
LOBBYING

8.1. Improper Influence. Grantee certifies that it will not use and has not used Grant Funds to influence or attempt to influence an officer or employee of any government agency or a member or employee of the State or federal legislature in connection with the awarding of any agreement, the making of any grant, the making of any loan, the entering into of any cooperative agreement, or the extension, continuation, renewal, amendment or modification of any agreement, grant, loan or cooperative agreement. Additionally, Grantee certifies that it has filed the required certification under the Byrd Anti-Lobbying Amendment (31 USC 1352), if applicable.

8.2. Federal Form LLL. If any federal funds, other than federally-appropriated funds, were paid or will be paid to any person for influencing or attempting to influence any of the above persons in connection with this Agreement, the undersigned must also complete and submit Federal Form LLL, Disclosure of Lobbying Activities Form, in accordance with its instructions.

8.3. Lobbying Costs. Grantee certifies that it is in compliance with the restrictions on lobbying set forth in 2 CFR 200.450. For any Indirect Costs associated with this Agreement, total lobbying costs must be separately identified in the Program Budget, and thereafter treated as other Unallowable Costs.

8.4. Procurement Lobbying. Grantee warrants and certifies that it and, to the best of its knowledge, its subrecipients have complied and will comply with Illinois Executive Order No. 1 (2007) (EO 1-2007). EO 1-2007 generally prohibits grantees and subcontractors from hiring the then-serving Governor's family members to lobby procurement activities of the State, or any other unit of government in Illinois including local governments, if that procurement may result in a contract valued at over $25,000. This prohibition also applies to hiring for that same purpose any former State employee who had procurement authority at any time during the one-year period preceding the procurement lobbying activity.

8.5. Subawards. Grantee must include the language of this ARTICLE in the award documents for any subawards made pursuant to this Award at all tiers. All subrecipients are also subject to certification and disclosure. Pursuant to Appendix II(I) to 2 CFR Part 200, Grantee must forward all disclosures by contractors regarding this certification to Grantor.

8.6. Certification. This certification is a material representation of fact upon which reliance was placed to enter into this transaction and is a prerequisite for this transaction, pursuant to 31 USC 1352. Any person who fails to file the required certifications will be subject to a civil penalty of not less than $10,000, and not more than $100,000, for each such failure.

ARTICLE IX
MAINTENANCE AND ACCESSIBILITY OF RECORDS; MONITORING

9.1. Records Retention. Grantee must maintain for three (3) years from the date of submission of the final expenditure report, adequate books, all financial records and, supporting documents, statistical records, and all other records pertinent to this Award, adequate to comply with 2 CFR 200.334, unless a different retention period is specified in 2 CFR 200.334, 44 Ill. Admin. Code 7000.430(a) and (b) or **PART TWO** or **PART THREE**. If any litigation, claim or audit is started before the expiration of the retention period, the records must be retained until all litigation, claims or audit exceptions involving the records have been resolved and final action taken.

9.2. Accessibility of Records. Grantee, in compliance with 2 CFR 200.337 and 44 Ill. Admin. Code 7000.430(f), must make books, records, related papers, supporting documentation and personnel relevant to this Agreement available to authorized Grantor representatives, the Illinois Auditor General, Illinois Attorney General, any Executive Inspector General, Grantor's Inspector General, federal authorities, any person identified in 2 CFR 200.337, and any other person as may be authorized by Grantor (including auditors), by the State of Illinois or by federal statute. Grantee must cooperate fully in any such audit or inquiry.

9.3. Failure to Maintain Books and Records. Failure to maintain adequate books, records and supporting documentation, as described in this ARTICLE, will result in the disallowance of costs for which there is insufficient supporting documentation and also establishes a presumption in favor of the State for the recovery of any Grant Funds paid by the State under this Agreement for which adequate books, records and supporting documentation are not available to support disbursement.

9.4. Monitoring and Access to Information. Grantee must monitor its activities to assure compliance with applicable state and federal requirements and to assure its performance expectations are being achieved. Grantor will monitor the activities of Grantee to assure compliance with all requirements, including applicable programmatic rules, regulations, and guidelines that the Grantor promulgates or implements, and performance expectations of the Award. Grantee must timely submit all financial and performance reports, and must supply, upon Grantor's request, documents and information relevant to the Award. Grantor may make site visits as warranted by Program needs. 2 CFR 200.329; 200.332. Additional monitoring requirements may be in **PART TWO** or **PART THREE**.

ARTICLE X
FINANCIAL REPORTING REQUIREMENTS

10.1. Required Periodic Financial Reports. Grantee must submit financial reports as requested and in the format required by Grantor no later than the dues date(s) specified in **PART TWO** or **PART THREE**. Grantee must submit reports to Grantor describing the expenditure(s) of the funds related thereto at the intervals specified by Grantor, which must be no less frequent than annually and no more frequent than quarterly, unless otherwise specified in either PART TWO or PART THREE (approved as an exception by GATU) or on Exhibit E pursuant to specific conditions. 2 CFR 200.328(b). Any report required by 30 ILCS 708/125 may be detailed in **PART TWO** or **PART THREE**.

10.2. Financial Close-out Report.

(a) Grantee must submit a financial Close-out Report, in the format required by Grantor, by the due date specified in **PART TWO** or **PART THREE**, which must be no later than sixty (60) calendar days following the end of the Period of Performance for this Agreement or Agreement termination. The format of this financial Close-out Report must follow a format prescribed by Grantor. 2 CFR 200.344; 44 Ill. Admin. Code 7000.440(b).

(b) If an audit or review of Grantee occurs and results in adjustments after Grantee submits a Close-out Report, Grantee must submit a new financial Close-out Report based on audit adjustments, and immediately submit a refund to Grantor, if applicable. 2 CFR 200.345; 44 Ill. Admin. Code 7000.450.

10.3. Effect of Failure to Comply. Failure to comply with the reporting requirements in this Agreement may cause a delay or suspension of funding or require the return of improper payments or Unallowable Costs, and will be considered a material breach of this Agreement. Grantee's failure to comply with ARTICLE X, ARTICLE XI, or ARTICLE XVII will be considered prima facie evidence of a breach and may be admitted as such, without further proof, into evidence in an administrative proceeding before Grantor, or in any other legal proceeding. Grantee should refer to the State Grantee Compliance Enforcement System for policy and consequences for failure to comply. 44 Ill. Admin. Code 7000.80.

ARTICLE XI
PERFORMANCE REPORTING REQUIREMENTS

11.1. Required Periodic Performance Reports. Grantee must submit performance reports as requested and in the format required by Grantor no later than the due date(s) specified in **PART TWO** or **PART THREE**. 44 Ill. Admin. Code 7000.410. Grantee must report to Grantor on the performance measures listed in **Exhibit D**, **PART TWO** or **PART THREE** at the intervals specified by Grantor, which must be no less frequent than annually and no more frequent than quarterly, unless otherwise specified in either **PART TWO** or **PART THREE** (approved as an exception by GATU), or on **Exhibit E** pursuant to specific conditions. For certain construction-related Awards, such reports may be exempted as identified in **PART TWO** or **PART THREE**. 2 CFR 200.329.

11.2. Performance Close-out Report. Grantee must submit a performance Close-out Report, in the format required by Grantor by the due date specified in **PART TWO** or **PART THREE**, which must be no later than 60 calendar days following the end of the Period of Performance or Agreement termination. 2 CFR 200.344; 44 Ill. Admin. Code 7000.440(b).

11.3. Content of Performance Reports. Pursuant to 2 CFR 200.329(b) and (c), all performance reports must relate the financial data and project or program accomplishments to the performance goals and objectives of this Award and also include the following: a comparison of actual accomplishments to the objectives of the Award established for the reporting period (for example, comparing costs to units of accomplishment); computation of the cost and demonstration of cost effective practices (e.g., through unit cost data); performance trend data and analysis if required; the reasons why established goals were not met, if appropriate; and additional information, analysis, and explanation of any cost overruns or higher-than-expected unit costs. Additional content and format guidelines for the performance reports will be determined by Grantor contingent on the Award's statutory, regulatory and administrative requirements, and are included in **PART TWO** or **PART THREE** of this Agreement.

ARTICLE XII
AUDIT REQUIREMENTS

12.1. Audits. Grantee is subject to the audit requirements contained in the Single Audit Act Amendments of 1996 (31 USC 7501-7507), Subpart F of 2 CFR Part 200, and the audit rules and policies set forth by the Governor's Office of Management and Budget. 30 ILCS 708/65(c); 44 Ill. Admin. Code 7000.90.

12.2. Consolidated Year-End Financial Reports (CYEFR). All grantees must complete and submit a CYEFR through the Grantee Portal, except those exempted by federal or State statute or regulation, as set forth in **PART TWO** or **PART THREE**. The CYEFR is a required schedule in Grantee's audit report if Grantee is required to complete and submit an audit report as set forth herein.

(a) Grantee's CYEFR must cover the same period as the audited financial statements, if required, and must be submitted in accordance with the audit schedule at 44 Ill. Admin. Code 7000.90. If Grantee is not required to complete audited financial statements, the CYEFR must cover Grantee's fiscal year and must be submitted within 6 months of the Grantee's fiscal year-end.

(b) The CYEFR must include an in relation to opinion from the auditor of the financial statements included in the audit.

(c) The CYEFR must follow a format prescribed by Grantor.

12.3. Entities That Are Not "For-Profit".

(a) This Paragraph applies to Grantees that are not "for-profit" entities.

(b) Single and Program-Specific Audits. If, during its fiscal year, Grantee expends at least $1,000,000 in federal Awards (direct federal and federal pass-through awards combined), Grantee must have a single audit or program-specific audit conducted for that year as required by 2 CFR 200.501 and other applicable sections of Subpart F of 2 CFR Part 200. The audit report packet must be completed as described in 2 CFR 200.512 (single audit) or 2 CFR 200.507 (program-specific audit), 44 Ill. Admin. Code 7000.90(h)(1) and the current GATA audit manual and submitted to the Federal Audit Clearinghouse, as required by 2 CFR 200.512. The results of peer and external quality control reviews, management letters issued by the auditors and their respective corrective action plans if significant deficiencies or material weaknesses are identified, and the CYEFR(s) must be submitted to the Grantee Portal at the same time the audit report packet is submitted to the Federal Audit Clearinghouse. The due date of all required submissions set forth in this Paragraph is the earlier of (i) thirty (30) calendar days after receipt of the auditor's report(s) or (ii) nine (9) months after the end of Grantee's audit period.

(c) Financial Statement Audit. If, during its fiscal year, Grantee expends less than $1,000,000 in federal Awards, Grantee is subject to the following audit requirements:

(i) If, during its fiscal year, Grantee expends at least $750,000 in State-issued Awards, Grantee must have a financial statement audit conducted in accordance with the Generally Accepted Government Auditing Standards (GAGAS). Grantee may be subject to additional requirements in **PART TWO**, **PART THREE** or **Exhibit E** based on Grantee's risk profile.

(ii) If, during its fiscal year, Grantee expends less than $750,000 in State-issued Awards, but expends at least $500,000 in State-issued Awards, Grantee must have a financial statement audit conducted in accordance with the Generally Accepted Auditing Standards (GAAS).

(iii) If Grantee is a Local Education Agency (as defined in 34 CFR 77.1), Grantee must have a financial statement audit conducted in accordance with GAGAS, as required by 23 Ill. Admin. Code 100.110, regardless of the dollar amount of expenditures of State-issued Awards.

(iv) If Grantee does not meet the requirements in subsections 12.3(b) and 12.3(c)(i-iii) but is required to have a financial statement audit conducted based on other regulatory requirements, Grantee must submit those audits for review.

(v) Grantee must submit its financial statement audit report packet, as set forth in 44 Ill. Admin. Code 7000.90(h)(2) and the current GATA audit manual, to the Grantee Portal within the earlier of (i) thirty (30) calendar days after receipt of the auditor's report(s) or (ii) six (6) months after the end of Grantee's audit period.

12.4. "For-Profit" Entities.

(a) This Paragraph applies to Grantees that are "for-profit" entities.

(b) Program-Specific Audit. If, during its fiscal year, Grantee expends at least $1,000,000 in federal pass-through funds from State-issued Awards, Grantee must have a program-specific audit conducted in accordance with 2 CFR 200.507. The auditor must audit federal pass-through programs with federal pass-through Awards expended that, in the aggregate, cover at least 50 percent (0.50) of total federal pass-through Awards expended. The audit report packet must be completed as described in 2 CFR 200.507 (program-specific audit), 44 Ill. Admin. Code 7000.90 and the current GATA audit manual, and must be submitted to the Grantee Portal. The due date of all required submissions set forth in this Paragraph is the earlier of (i) thirty (30) calendar days after receipt of the auditor's report(s) or (ii) nine (9) months after the end of Grantee's audit period.

(c) Financial Statement Audit. If, during its fiscal year, Grantee expends less than $1,000,000 in federal pass-through funds from State-issued Awards, Grantee must follow all of the audit requirements in Paragraphs 12.3(c)(i)-(v), above.

(d) Publicly-Traded Entities. If Grantee is a publicly-traded company, Grantee is not subject to the single audit or program-specific audit requirements, but must submit its annual audit conducted in accordance with its regulatory requirements.

12.5. Performance of Audits. For those organizations required to submit an independent audit report, the audit must be conducted by the Illinois Auditor General (as required for certain governmental entities only), or a Certified Public Accountant or Certified Public Accounting Firm licensed in the State of Illinois or in accordance with Section 5.2 of the Illinois Public Accounting Act (225 ILCS 450/5.2). For all audits required to be performed subject to GAGAS or Generally Accepted Auditing Standards, Grantee must request and maintain on file a copy of the auditor's most recent peer review report and acceptance letter. Grantee must follow procedures prescribed by Grantor for the preparation and submission of audit reports and any related documents.

12.6. Delinquent Reports. When audit reports or financial statements required under this ARTICLE are prepared by the Illinois Auditor General, if they are not available by the above-specified due date, they must be provided to Grantor within thirty (30) days of becoming available. Grantee should refer to the State Grantee Compliance Enforcement System for the policy and consequences for late reporting. 44 Ill. Admin. Code 7000.80.

ARTICLE XIII
TERMINATION; SUSPENSION; NON-COMPLIANCE

13.1. Termination.

(a) Either Party may terminate this Agreement, in whole or in part, upon thirty (30) calendar days' prior written notice to the other Party.

(b) If terminated by the Grantee, Grantee must include the reasons for such termination, the effective date, and, in the case of a partial termination, the portion to be terminated. If Grantor determines in the case of a partial termination that the reduced or modified portion of the Award will not accomplish the purposes for which the Award was made, Grantor may terminate the Agreement in its entirety. 2 CFR 200.340(a)(3).

(c) This Agreement may be terminated, in whole or in part, by Grantor:

(i) Pursuant to a funding failure under Paragraph 4.1;

(ii) If Grantee fails to comply with the terms and conditions of this or any Award, application or proposal, including any applicable rules or regulations, or has made a false representation in connection with the receipt of this or any Award; or

(iii) If the Award no longer effectuates the Program goals or agency priorities and if this termination is permitted in the terms and conditions of the Award, which must be detailed in **Exhibit A, PART TWO** or PART THREE.

13.2. Suspension. Grantor may suspend this Agreement, in whole or in part, pursuant to a funding failure under Paragraph 4.1 or if the Grantee fails to comply with terms and conditions of this or any Award. If suspension is due to Grantee's failure to comply, Grantor may withhold further payment and prohibit Grantee from incurring additional Obligations pending corrective action by Grantee or a decision to terminate this Agreement by Grantor. Grantor may allow necessary and proper costs that Grantee could not reasonably avoid during the period of suspension.

13.3. Non-compliance. If Grantee fails to comply with the U.S. Constitution, applicable statutes, regulations or the terms and conditions of this or any Award, Grantor may impose additional conditions on Grantee, as described in 2 CFR 200.208. If Grantor determines that non-compliance cannot be remedied by imposing additional conditions, Grantor may take one or more of the actions described in 2 CFR 200.339. The Parties must follow all Grantor policies and procedures regarding non-compliance, including, but not limited to, the procedures set forth in the State Grantee Compliance Enforcement System. 44 Ill. Admin. Code 7000.80 and 7000.260.

13.4. Objection. If Grantor suspends or terminates this Agreement, in whole or in part, for cause, or takes any other action in response to Grantee's non-compliance, Grantee may avail itself of any opportunities to object and challenge such suspension, termination or other action by Grantor in accordance with any applicable processes and procedures, including, but not limited to, the procedures set forth in the State Grantee Compliance Enforcement System. 2 CFR 200.342; 44 Ill. Admin. Code 7000.80 and 7000.260.

13.5. Effects of Suspension and Termination.

(a) Grantor may credit Grantee for allowable expenditures incurred in the performance of authorized services under this Agreement prior to the effective date of a suspension or termination.

(b) Except as set forth in subparagraph (c), below, Grantee must not incur any costs or Obligations that require the use of Grant Funds after the effective date of a suspension or termination, and must cancel as many outstanding Obligations as possible.

(c) Costs to Grantee resulting from Obligations incurred by Grantee during a suspension or after termination of the Agreement are not allowable unless Grantor expressly authorizes them in the notice of suspension or termination or subsequently. However, Grantor may allow costs during a suspension or after termination if:

(i) The costs result from Obligations properly incurred before the effective date of suspension or termination, are not in anticipation of the suspension or termination, and the costs would be allowable if the Agreement was not suspended or terminated prematurely. 2 CFR 200.343.

13.6. Close-out of Terminated Agreements. If this Agreement is terminated, in whole or in part, the Parties must comply with all close-out and post-termination requirements of this Agreement. 2 CFR 200.340(d).

ARTICLE XIV
SUBCONTRACTS/SUBAWARDS

14.1. Subcontracting/Subrecipients/Delegation. Grantee must not subcontract nor issue a subaward for any portion of this Agreement nor delegate any duties hereunder without Prior Approval of Grantor. The requirement for Prior Approval is satisfied if the subcontractor or subrecipient has been identified in the uniform grant application, such as, without limitation, a Project description, and Grantor has approved. Grantee must follow all applicable requirements set forth in 2 CFR 200.332.

14.2. Application of Terms. If Grantee enters into a subaward agreement with a subrecipient, Grantee must notify the subrecipient of the applicable laws and regulations and terms and conditions of this Award by attaching this Agreement to the subaward agreement. The terms of this Agreement apply to all subawards authorized in accordance with Paragraph 14.1. 2 CFR 200.101(b).

14.3. Liability as Guaranty. Grantee will be liable as guarantor for any Grant Funds it obligates to a subrecipient or subcontractor pursuant to this ARTICLE in the event Grantor determines the funds were either misspent or are being improperly held and the subrecipient or subcontractor is insolvent or otherwise fails to return the funds. 2 CFR 200.345; 30 ILCS 705/6; 44 Ill. Admin. Code 7000.450(a).

ARTICLE XV
NOTICE OF CHANGE

15.1. Notice of Change. Grantee must notify Grantor if there is a change in Grantee's legal status, FEIN, UEI, SAM registration status, Related Parties, senior management (for non-governmental grantees only) or address. If the change is anticipated, Grantee must give thirty (30) days' prior written notice to Grantor. If the change is unanticipated, Grantee must give notice as soon as practicable thereafter. Grantor reserves the right to take any and all appropriate action as a result of such change(s).

15.2. Failure to Provide Notification. To the extent permitted by Illinois law (see Paragraph 21.2), Grantee must hold harmless Grantor for any acts or omissions of Grantor resulting from Grantee's failure to notify Grantor as required by Paragraph 15.1.

15.3. Notice of Impact. Grantee must notify Grantor in writing of any event, including, by not limited to, becoming a party to litigation, an investigation, or transaction that may have a material impact on Grantee's ability to perform under this Agreement. Grantee must provide notice to Grantor as soon as possible, but no later than five (5) days after Grantee becomes aware that the event may have a material impact.

15.4. Effect of Failure to Provide Notice. Failure to provide the notice described in this ARTICLE is grounds for termination of this Agreement and any costs incurred after the date notice should have been given may be disallowed.

ARTICLE XVI
STRUCTURAL REORGANIZATION AND RECONSTITUTION OF BOARD MEMBERSHIP

16.1. Effect of Reorganization. This Agreement is made by and between Grantor and Grantee, as Grantee is currently organized and constituted. Grantor does not agree to continue this Agreement, or any license related thereto, should Grantee significantly reorganize or otherwise substantially change the character of its corporate structure, business structure or governance structure. Grantee must give Grantor prior notice of any such action or changes significantly affecting its overall structure or, for non-governmental grantees only, management makeup (for example, a merger or a corporate restructuring), and must provide all reasonable documentation necessary for Grantor to review the proposed transaction including financial records and corporate and shareholder minutes of any corporation which may be involved. Grantor reserves the right to terminate the Agreement based on whether the newly organized entity is able to carry out the requirements of the Award. This ARTICLE does not require Grantee to report on minor changes in the makeup of its board membership or

governance structure, as applicable. Nevertheless, **PART TWO** or **PART THREE** may impose further restrictions. Failure to comply with this ARTICLE constitutes a material breach of this Agreement.

ARTICLE XVII
CONFLICT OF INTEREST

17.1. Required Disclosures. Grantee must immediately disclose in writing any potential or actual Conflict of Interest to Grantor. 2 CFR 200.112; 30 ILCS 708/35.

17.2. Prohibited Payments. Payments made by Grantor under this Agreement must not be used by Grantee to compensate, directly or indirectly, any person currently holding an elective office in this State including, but not limited to, a seat in the General Assembly. In addition, where Grantee is not an instrumentality of the State of Illinois, as described in this Paragraph, Grantee must request permission from Grantor to compensate, directly or indirectly, any officer or any person employed by an office or agency of the State of Illinois. An instrumentality of the State of Illinois includes, without limitation, State departments, agencies, boards, and State universities. An instrumentality of the State of Illinois does not include, without limitation, units of Local Government and related entities.

17.3. Request for Exemption. Grantee may request written approval from Grantor for an exemption from Paragraph 17.2. Grantee acknowledges that Grantor is under no obligation to provide such exemption and that Grantor may grant any such exemption subject to additional terms and conditions as Grantor may require.

ARTICLE XVIII
EQUIPMENT OR PROPERTY

18.1. Purchase of Equipment. For any equipment purchased in whole or in part with Grant Funds, if Grantor determines that Grantee has not met the conditions of 2 CFR 200.439, the costs for such equipment will be disallowed. Grantor must notify Grantee in writing that the purchase of equipment is disallowed.

18.2. Prohibition against Disposition/Encumbrance. Any equipment, material, or real property that Grantee purchases or improves with Grant Funds must not be sold, transferred, encumbered (other than original financing) or otherwise disposed of during the Award Term without Prior Approval of Grantor unless a longer period is required in **PART TWO** or **PART THREE** and permitted by 2 CFR Part 200 Subpart D. Use or disposition of real property acquired or improved using Grant Funds must comply with the requirements of 2 CFR 200.311. Real property, equipment, and intangible property that are acquired or improved in whole or in part using Grant Funds are subject to the provisions of 2 CFR 200.316. Grantor may require the Grantee to record liens or other appropriate notices of record to indicate that personal or real property has been acquired or improved with this Award and that use and disposition conditions apply to the property.

18.3. Equipment and Procurement. Grantee must comply with the uniform standards set forth in 2 CFR 200.310–200.316 governing the management and disposition of property, the cost of which was supported by Grant Funds. Any waiver from such compliance must be granted by either the President's Office of Management and Budget, the Governor's Office of Management and Budget, or both, depending on the source of the Grant Funds used. Additionally, Grantee must comply with the standards set forth in 2 CFR 200.317-200.327 to establish procedures to use Grant Funds for the procurement of supplies and other expendable property, equipment, real property and other services.

18.4. Equipment Instructions. Grantee must obtain disposition instructions from Grantor when equipment, purchased in whole or in part with Grant Funds, is no longer needed for their original purpose. Notwithstanding anything to the contrary contained in this Agreement, Grantor may require transfer of any equipment to Grantor or a third party for any reason, including, without limitation, if Grantor terminates the

Award or Grantee no longer conducts Award activities. Grantee must properly maintain, track, use, store and insure the equipment according to applicable best practices, manufacturer's guidelines, federal and state laws or rules, and Grantor requirements stated herein.

18.5. Domestic Preferences for Procurements. In accordance with 2 CFR 200.322, to the greatest extent practicable and consistent with law, Grantee must, under this Award, provide a preference for the purchase, acquisition, or use of goods, products, or materials produced in the United States (including but not limited to iron, aluminum, steel, cement, and other manufactured products). The requirements of this Paragraph must be included in all subawards and in all contracts and purchase orders under this Award.

ARTICLE XIX
PROMOTIONAL MATERIALS; PRIOR NOTIFICATION

19.1. Promotional and Written Materials. Use of Grant Funds for promotions is subject to the prohibitions for advertising or public relations costs in 2 CFR 200.421(e). To use Grant Funds in whole or in part to produce any written publications, announcements, reports, flyers, brochures or other written materials, these uses must be allowable under 2 CFR 200.421 and 200.467 and Grantee must include in these publications, announcements, reports, flyers, brochures and all other such material, the phrase "Funding provided in whole or in part by the [Grantor]." 2 CFR 200.467. Exceptions to this requirement must be requested, in writing, from Grantor and will be considered authorized only upon written notice thereof to Grantee.

19.2. Prior Notification/Release of Information. Grantee must notify Grantor ten (10) days prior to issuing public announcements or press releases concerning work performed pursuant to this Agreement, or funded in whole or in part by this Agreement, and must cooperate with Grantor in joint or coordinated releases of information.

ARTICLE XX
INSURANCE

20.1. Maintenance of Insurance. Grantee must maintain in full force and effect during the Term of this Agreement casualty and bodily injury insurance, as well as insurance sufficient to cover the replacement cost of any and all real or personal property (including equipment), or both, purchased or, otherwise acquired, or improved in whole or in part, with funds disbursed pursuant to this Agreement. 2 CFR 200.310. Additional insurance requirements may be detailed in **PART TWO** or PART THREE.

20.2. Claims. If a claim is submitted for real or personal property, or both, purchased in whole with funds from this Agreement and such claim results in the recovery of money, such money recovered must be surrendered to Grantor.

ARTICLE XXI
LAWSUITS AND INDEMNIFICATION

21.1. Independent Contractor. Neither Grantee nor any employee or agent of Grantee acquires any employment rights with Grantor by virtue of this Agreement. Grantee must provide the agreed services and achieve the specified results free from the direction or control of Grantor as to the means and methods of performance. Grantee must provide its own equipment and supplies necessary to conduct its business; provided, however, that in the event, for its convenience or otherwise, Grantor makes any such equipment or supplies available to Grantee, Grantee's use of such equipment or supplies provided by Grantor pursuant to this Agreement is strictly limited to official Grantor or State of Illinois business and not for any other purpose, including any personal benefit or gain.

21.2. Indemnification and Liability.

(a) Non-governmental entities. This subparagraph applies only if Grantee is a non-governmental entity. Grantee must hold harmless Grantor against any and all liability, loss, damage, cost or expenses, including attorneys' fees, arising from the intentional torts, negligence or breach of contract of Grantee, with the exception of acts performed in conformance with an explicit, written directive of Grantor. Indemnification by Grantor is governed by the State Employee Indemnification Act (5 ILCS 350/.01 et seq.) as interpreted by the Illinois Attorney General. Grantor makes no representation that Grantee, an independent contractor, will qualify or be eligible for indemnification under said Act.

(b) Governmental entities. This subparagraph applies only if Grantee is a governmental unit as designated in Paragraph 3.2. Neither Party shall be liable for actions chargeable to the other Party under this Agreement including, but not limited to, the negligent acts and omissions of the other Party's agents, employees or subcontractors in the performance of their duties as described under this Agreement, unless such liability is imposed by law. This Agreement is not construed as seeking to enlarge or diminish any obligation or duty owed by one Party against the other or against a third party.

ARTICLE XXII
MISCELLANEOUS

22.1. Gift Ban. Grantee is prohibited from giving gifts to State employees pursuant to the State Officials and Employees Ethics Act (5 ILCS 430/10-10) and Illinois Executive Order 15-09.

22.2. Assignment Prohibited. This Agreement must not be sold, assigned, or transferred in any manner by Grantee, to include an assignment of Grantee's rights to receive payment hereunder, and any actual or attempted sale, assignment, or transfer by Grantee without the Prior Approval of Grantor in writing renders this Agreement null, void and of no further effect.

22.3. Copies of Agreements upon Request. Grantee must, upon request by Grantor, provide Grantor with copies of contracts or other agreements to which Grantee is a party with any other State agency.

22.4. Amendments. This Agreement may be modified or amended at any time during its Term by mutual consent of the Parties, expressed in writing and signed by the Parties.

22.5. Severability. If any provision of this Agreement is declared invalid, its other provisions will remain in effect.

22.6. No Waiver. The failure of either Party to assert any right or remedy pursuant to this Agreement will not be construed as a waiver of either Party's right to assert such right or remedy at a later time or constitute a course of business upon which either Party may rely for the purpose of denial of such a right or remedy.

22.7. Applicable Law; Claims. This Agreement and all subsequent amendments thereto, if any, are governed and construed in accordance with the laws of the State of Illinois. Any claim against Grantor arising out of this Agreement must be filed exclusively with the Illinois Court of Claims. 705 ILCS 505/1 *et seq.* Grantor does not waive sovereign immunity by entering into this Agreement.

22.8. Compliance with Law. Grantee is responsible for ensuring that Grantee's Obligations and services hereunder are performed in compliance with all applicable federal and State laws, including, without limitation, federal regulations, State administrative rules, including but not limited to 44 Ill. Admin. Code Part 7000, laws and rules which govern disclosure of confidential records or other information obtained by Grantee concerning persons served under this Agreement, and any license requirements or professional certification provisions.

22.9. Compliance with Freedom of Information Act. Upon request, Grantee must make available to Grantor all documents in its possession that Grantor deems necessary to comply with requests made under the Freedom of Information Act. 5 ILCS 140/7(2).

22.10 Compliance with Whistleblower Protections. Grantee must comply with the Whistleblower Act (740 ILCS 174/1 *et seq.*) and the whistleblower protections set forth in 2 CFR 200.217, including but not limited to, the requirement that Grantee and its subrecipients inform their employees in writing of employee whistleblower rights and protections under 41 U.S.C. 4712.

22.11. Precedence.

(a) Except as set forth in subparagraph (b), below, the following rules of precedence are controlling for this Agreement: In the event there is a conflict between this Agreement and any of the exhibits or attachments hereto, this Agreement controls. In the event there is a conflict between **PART ONE** and **PART TWO** or **PART THREE** of this Agreement, **PART ONE** controls. In the event there is a conflict between **PART TWO** and **PART THREE** of this Agreement, **PART TWO** controls. In the event there is a conflict between this Agreement and relevant statute(s) or rule(s), the relevant statute(s) or rule(s) controls.

(b) Notwithstanding the provisions in subparagraph (a), above, if a relevant federal or state statute(s) or rule(s) requires an exception to this Agreement's provisions, or an exception to a requirement in this Agreement is granted by GATU, such exceptions must be noted in **PART TWO** or **PART THREE**, and in such cases, those requirements control.

22.12. Illinois Grant Funds Recovery Act. In the event of a conflict between the Illinois Grant Funds Recovery Act and the Grant Accountability and Transparency Act, the provisions of the Grant Accountability and Transparency Act control. 30 ILCS 708/80.

22.13. Headings. Articles and other headings contained in this Agreement are for reference purposes only and are not intended to define or limit the scope, extent or intent of this Agreement or any provision hereof.

22.14. Counterparts. This Agreement may be executed in one or more counterparts, each of which are considered to be one and the same agreement, binding on all Parties hereto, notwithstanding that all Parties are not signatories to the same counterpart. Duplicated signatures, signatures transmitted via facsimile, or signatures contained in a Portable Document Format (PDF) document are deemed original for all purposes.

22.15. Attorney Fees and Costs. Unless prohibited by law, if Grantor prevails in any proceeding to enforce the terms of this Agreement, including any administrative hearing pursuant to the Grant Funds Recovery Act or the Grant Accountability and Transparency Act, Grantor has the right to recover reasonable attorneys' fees, costs and expenses associated with such proceedings.

22.16. Continuing Responsibilities. The termination or expiration of this Agreement does not affect: (a) the right of Grantor to disallow costs and recover funds based on a later audit or other review; (b) the obligation of the Grantee to return any funds due as a result of later refunds, corrections or other transactions, including, without limitation, final Indirect Cost Rate adjustments and those funds obligated pursuant to ARTICLE XIV; (c) the CYEFR(s); (d) audit requirements established in 44 Ill. Admin. Code 7000.90 and ARTICLE XII ; (e) property management and disposition requirements established in 2 CFR 200.310 through 2 CFR 200.316 and ARTICLE XVIII; or (f) records related requirements pursuant to ARTICLE IX. 44 Ill. Admin. Code 7000.440.

THE REMAINDER OF THIS PAGE IS INTENTIONALLY LEFT BLANK.

EXHIBIT A

PROJECT DESCRIPTION

Grantee must complete the Award Activities described on this **Exhibit A**, the Deliverables and Milestones listed on **Exhibit B** and the Performance Measures listed on **Exhibit D** within the term of this Agreement, as provided in Paragraph 2.1, herein.

AUTHORITY: The Grantor is authorized to make this Award pursuant to 20 ILCS 605/605-55 and/or 20 ILCS 605/605-30.

The purpose of this authority is as follows:

To make and enter into contracts, including grants, as authorized pursuant to appropriations by the General Assembly. and/or to use the State and federal programs, grants, and subsidies that are available to assist in the discharge of the provisions of the Civil Administrative Code of Illinois.

PROJECT DESCRIPTION:

The Grantee is a governmental entity which provides essential public services to the citizens of the Village of Northbrook in Cook County.

Grant funds will be utilized for a portion of the costs, including any that are prior incurred, associated with public safety and equipment expenses at the Grantee owned Village Hall located at 1225 Cedar Lane in the Village of Northbrook, Illinois. The project is necessary as the equipment will help support the emergency response of the Grantee by providing rapid response traffic barrier system, which the Grantee currently does not have, increase the number of message boards that can be used for traffic control and informational purposes, and provide a Fire Response Utility Task Vehicle, which will assist response in hard-to-reach areas. Funds from this Grant will be used to purchase a Utility Task Vehicle, multiple LED message boards, and a rapid-deployment barrier system for traffic control. All other costs associated with the completion of the project will be paid via the use of other funding sources.

Specifically, Grant funds will include a portion of the "Equipment" costs associated with the purchase of a rapid-deployment barrier system and trailer, LED message boards, and Utility Task Vehicle.

The completion of this project will benefit the public by providing the Grantee with much better capacity to more efficiently respond to emergencies and provide better traffic control and messaging.

EXHIBIT B

DELIVERABLES OR MILESTONES

To be stated on the initial submitted Periodic Performance Report (PPR), as directed by the Report Deliverable Schedule, the Grantee will provide a detailed task list of projected deliverables, which must be approved by Grantor. These tasks and associated due dates, and any subsequent revisions, shall be incorporated by reference into this Agreement. These tasks will be used to measure performance throughout the life of the Award and can be updated and reported on each PPR reporting due date.

EXHIBIT C

CONTACT INFORMATION

CONTACTS FOR NOTIFICATION AND GRANT ADMINISTRATION:

Unless specified elsewhere, all notices required or desired to be sent by either Party must be sent to the persons listed below. Grantee must notify Grantor of any changes in its contact information listed below within five (5) business days from the effective date of the change, and Grantor must notify Grantee of any changes to its contact information as soon as practicable. The Party making a change must send any changes in writing to the contact for the other Party. No amendment to this Agreement is required if information in this Exhibit is changed.

FOR OFFICIAL GRANT NOTIFICATIONS

GRANTOR CONTACT

Name: Kristin A. Richards

Title: Director

Address: 1011 S. 2nd St.
Springfield, IL 62704

GRANTEE CONTACT

Name: Kathryn L Ciesla

Title: Village President

Address: 1225 Cedar Lane
Northbrook, IL 60062-4513

GRANTEE PAYMENT ADDRESS
(If different than the address above)

Address: N/A

FOR GRANT ADMINISTRATION

GRANTOR CONTACT

Name: Alex Fuller
Title: Grant Manager
Address: 1011 S. 2nd St.
Springfield, IL 62704
Phone: 217-782-9988
TTY#: (800) 785-6055
Email Address: Alex.Fuller@Illinois.gov

GRANTEE CONTACT

Name: Kelly Hamill
Title: Director, Public Works
Address: 1225 Cedar Lane
Northbrook, IL 60062-4513
Phone: 847-272-4711
TTY#: N/A
Email Address: kelly.hamill@northbrook.il.us

GRANTEE DESIGNEES

The following are designated as Authorized Designee(s) for the Grantee (*See* **PART TWO**, ARTICLE XXIII):

Authorized Designee: Kelly Hamill
Authorized Designee Title: Director, Public Works
Authorized Designee Phone: 847-272-4711 x4110
Authorized Designee Email: kelly.hamill@northbrook.il.us

Authorized Designee Signature: 

Authorized Signatory Approval:

Authorized Designee: Cara Pavlicek
Authorized Designee Title: Village Manager
Authorized Designee Phone: 847-664-4011
Authorized Designee Email: cara.pavlicek@northbrook.il.us

Authorized Designee Signature: 

Authorized Signatory Approval: 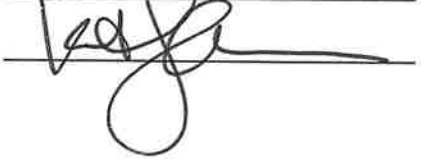

Authorized Designee: _____
Authorized Designee Title: _____
Authorized Designee Phone: _____
Authorized Designee Email: _____

Authorized Designee Signature: _____

Authorized Signatory Approval: _____

Authorized Designee: _____
Authorized Designee Title: _____
Authorized Designee Phone: _____
Authorized Designee Email: _____

Authorized Designee Signature: _____

Authorized Signatory Approval: _____

GRANTOR CONTACT FOR AUDIT OR CONSOLIDATED YEAR-END FINANCIAL REPORTS QUESTIONS—AUDIT UNIT

Email: CEO.GrantHelp@Illinois.gov

GRANTOR CONTACT FOR FINANCIAL CLOSEOUT AND REFUNDS—PROGRAM ACCOUNTANT

Name:	Sam Huston
Email:	samuel.huston@illinois.gov
Phone:	000-000-0000
Fax#:	N/A
Address:	IDCEO-ACCOUNTING OFFICE 1011 S 2ND ST SPRINGFIELD IL 62704-3004

EXHIBIT D

PERFORMANCE MEASURES AND STANDARDS

To be stated on the initial submitted Periodic Performance Report (PPR), as directed by the Report Deliverable Schedule, the Grantee will incorporate project specific performance measures within the corresponding section of the PPR. The project specific performance measures will encompass the following standardized performance measures listed below.

- Did the deliverables specified in the task list submitted pursuant to Exhibit B lead to the completion of the project described in Exhibit A?
- Given the total amount of Grant Funds available, does the percent currently drawn and expended directly correlate to the percent of the completion of the project to date?
- At the time of Award closeout, has the Grantee fulfilled the public purpose of the project stated in Exhibit A?

The Grantor reserves the right to deny any voucher request(s) at its discretion, based on lack of progress toward meeting completion goals. If the Grantee fails to meet any of the performance measures/goals, and if deemed appropriate at the discretion of the Grantor, the Grant Funds may be decreased by an amount proportionate to the size of the shortfall, and/or the Grantee may be responsible for the return of the Grant Funds in the amount specified by the Grantor. Grantor may initiate a grant modification(s) to de-obligate Grant Funds based on non-performance. The Grantee will submit grant modification requests as necessary in a timely manner, including a request to de-obligate Grant Funds in an amount that the Grantee determines will be unspent by the end of the Grant Agreement Term.

EXHIBIT E

SPECIFIC CONDITIONS

Grantor may remove (or reduce) a Specific Condition included in this Exhibit by providing written notice to the Grantee, in accordance with established procedures for removing a Specific Condition.

There were no conditions resulting from the Internal Control Questionnaire (ICQ).

There were no conditions resulting from the Programmatic Risk Assessment.

PART TWO – GRANTOR-SPECIFIC TERMS

In addition to the uniform requirements in **PART ONE**, Grantor has the following additional requirements for its Grantee:

ARTICLE XXIII
AUTHORIZED SIGNATORY

23.1. Authorized Signatory. In processing this Award and related documentation, Grantor will only accept materials signed by the Authorized Signatory or Designee of this Agreement, as designated or prescribed in the Grantee's signature block or on **Exhibit C**. If the Authorized Signatory chooses to assign a designee to sign or submit materials required by this Agreement to Grantor, the Authorized Signatory must either send written notice to Grantor indicating the name of the designee, or provide notice as set forth in **Exhibit C**. Without this notice, Grantor will reject any materials signed or submitted on the Grantee's behalf by anyone other than the Authorized Signatory. The Authorized Signatory must approve each Authorized Designee separately by signing as indicated on **Exhibit C** or on the appropriate form provided by Grantor. If an Authorized Designee(s) appears on **Exhibit C**, the Grantee should verify the information and indicate any changes as necessary. Signatures of both the Authorized Signatory and the Authorized Designee are required in order for the Authorized Designee to have signature authority under this Agreement.

ARTICLE XXIV
ADDITIONAL AUDIT PROVISIONS

24.1. Discretionary Audit. The Grantor may, at any time and in its sole discretion, require a program-specific audit, or other audit, SAS 115/AU-C265 letters (Auditor's Communication of Internal Control Related Matters) and SAS 114/AU-C260 letters (Auditor's Communication With Those Charged With Governance).

ARTICLE XXV
ADDITIONAL MONTORING PROVISIONS

25.1. Cooperation with Audits and Inquiries, Confidentiality. Pursuant to ARTICLE IX, above, the Grantee is obligated to cooperate with the Grantor and other legal authorities in any audit or inquiry related to the Award. The Grantor or any other governmental authority conducting an audit or inquiry may require the Grantee to keep confidential any audit or inquiry and to limit internal disclosure of the audit or inquiry to those Grantee personnel who are necessary to support the Grantee's response to the audit or inquiry. This confidentiality requirement does not limit Grantee's right to discuss an audit or inquiry with its legal counsel. If a third party seeks to require the Grantee, pursuant to any law, regulation, or legal process, to disclose an audit or inquiry that has been deemed confidential by the Grantor or other governmental authority, the Grantee must promptly notify the entity that is conducting the audit or inquiry of such effort so that the entity that is conducting the audit or inquiry may seek a protective order, take other appropriate action, or waive compliance by the Grantee with the confidentiality requirement.

ARTICLE XXVI
ADDITIONAL INTEREST PROVISIONS

26.1. Interest Earned on Grant Funds. Interest earned on Grant Funds in an amount up to $500 per year may be retained by the Grantee for administrative expenses unless otherwise provided in **PART THREE**. Any additional interest earned on Grant Funds above $500 per year must be returned to the Grantor pursuant to Paragraphs 4.3 and 29.2 herein, or as otherwise instructed by the Grant Manager or as set forth in **PART THREE**. All interest earned must be expended prior to Grant Funds. Any unspent Grant Funds or earned interest unspent must be returned as Grant Funds to the Grantor as described in Paragraphs 4.3 and 29.2 herein. All interest earned on Grant Funds must be accounted for and reported to the Grantor as provided in ARTICLE X herein. If applicable, the Grantor will remit interest earned and returned by Grantee to the U.S. Department of Health and Human Services

Payment Management System through the process set forth at 2 CFR 200.305(b)(12), or as otherwise directed by the federal awarding agency. The provisions of this Paragraph are inapplicable to the extent any statute, rule or program requirement provides for different treatment of interest income. Any provision that deviates from this paragraph is set forth in **PART THREE**.

ARTICLE XXVII
ADDITIONAL BUDGET PROVISIONS

27.1. Restrictions on Line Item Transfers. Unless set forth otherwise in **PART THREE** herein, Budget line item transfers within the guidelines set forth in paragraph 6.2 herein, which would not ordinarily require approval from Grantor, but result in an increase of ten percent (10%) or more to any expenditure category of the current approved Budget, are considered changes in the project scope and require Prior Approval from Grantor pursuant to 44 Ill. Admin. Code 7000.370(b).

ARTICLE XXVIII
ADDITIONAL REPRESENTATIONS AND WARRANTIES

28.1. Grantee Representations and Warranties. In connection with the execution and delivery of this Agreement, the Grantee makes the following representations and warranties to Grantor:

(a) That it has no public or private interest, direct or indirect, and will not acquire, directly or indirectly any such interest which does or may conflict in any manner with the performance of the Grantee's services and obligations under this Agreement;

(b) That no member of any governing body or any officer, agent or employee of the State, has a personal financial or economic interest directly in this Agreement, or any compensation to be paid hereunder except as may be permitted by applicable statute, regulation or ordinance;

(c) That there is no action, suit or proceeding at law or in equity pending, nor to the best of Grantee's knowledge, threatened, against or affecting the Grantee, before any court or before any governmental or administrative agency, which will have a material adverse effect on the performance required by this Agreement;

(d) That to the best of the Grantee's knowledge and belief, the Grantee, its principals and key project personnel:

(i) Are not presently declared ineligible or voluntarily excluded from contracting with any federal or State department or agency;

(ii) Have not, within a three (3)-year period preceding this Agreement, been convicted of any felony; been convicted of a criminal offense in connection with obtaining, attempting to obtain, or performing a public (federal, state, or local) transaction or contract under a public transaction; had a civil judgment rendered against them for commission of fraud; been found in violation of federal or state antitrust statutes; or been convicted of embezzlement, theft, larceny, forgery, bribery, falsification or destruction of records, making a false statement, or receiving stolen property;

(iii) Are not presently indicted for, or otherwise criminally or civilly charged, by a government entity (federal, state or local) with commission of any of the offenses enumerated in subparagraph (ii) of this certification; and

(iv) Have not had, within a three (3)-year period preceding this Agreement, any judgment rendered in an administrative, civil or criminal matter against the Grantee, or any entity

associated with its principals or key personnel, related to a grant issued by any federal or state agency or a local government.

Any request for an exception to the provisions of this subparagraph (d) must be made in writing, listing the name of the individual, home address, type of conviction and date of conviction; and

(e) Grantee certifies that it is not currently operating under, or subject to, any cease and desist order, or subject to any informal or formal regulatory action, and, to the best of Grantee's knowledge, that it is not currently the subject of any investigation by any state or federal regulatory, law enforcement or legal authority. Should it become the subject of an investigation by any state or federal regulatory, law enforcement or legal authority, Grantee shall promptly notify Grantor of any such investigation. Grantee acknowledges that should it later be subject to a cease and desist order, Memorandum of Understanding, or found in violation pursuant to any regulatory action or any court action or proceeding before any administrative agency, that Grantor is authorized to declare Grantee out of compliance with this Agreement and suspend or terminate the Agreement pursuant to ARTICLE XIII herein and any applicable rules.

ARTICLE XXIX
ADDITIONAL TERMINATION, SUSPENSION, BILLING SCHEDULE AND NON-COMPLIANCE PROVISIONS

29.1. Remedies for Non-Compliance. If Grantor suspends or terminates this Agreement pursuant to ARTICLE XIII herein, Grantor may also elect any additional remedy allowed by law, including, but not limited to, one or more of the following remedies:

(a) Direct the Grantee to refund some or all of the Grant Funds disbursed to it under this Agreement; and

(b) Direct the Grantee to remit an amount equivalent to the "Net Salvage Value" of all equipment or materials purchased with Grant Funds provided under this Agreement. For purposes of this Agreement, "Net Salvage Value" is defined as the amount realized, or that the Parties agree is likely to be realized from, the sale of equipment or materials purchased with Grant Funds provided under this Agreement at its current fair market value, less selling expenses.

29.2. Grant Refunds. In accordance with the Illinois Grant Funds Recovery Act, 30 ILCS 705/1 *et seq.*, the Grantee must, within forty five (45) days of the effective date of a termination of this Agreement, refund to Grantor, any balance of Grant Funds not spent or not obligated as of that date.

29.3. Grant Funds Recovery Procedures. In the event that Grantor seeks to recover from Grantee Grant Funds received pursuant to this Award that: (i) Grantee cannot demonstrate were properly spent, or (ii) have not been expended or legally obligated by the time of expiration or termination of this Award, the Parties agree to follow the procedures set forth in the Illinois Grant Funds Recovery Act, 30 ILCS 705/1 *et seq.* (GFRA), for the recovery of Grant Funds, including the informal and formal hearing requirements. All remedies available in Section 6 of the GFRA will apply to these proceedings. The Parties agree that Grantor's Administrative Hearing Rules (56 Ill. Admin. Code Part 2605) and/or any other applicable hearing rules shall govern these proceedings.

29.4. Grantee Responsibility. Grantee will be held responsible for the expenditure of all Grant Funds received through this Award, whether expended by Grantee or a subrecipient or contractor of Grantee. Grantor may seek any remedies against Grantee permitted pursuant to this Agreement and 2 CFR 200.339 for the action of a subrecipient or contractor of Grantee that is not in compliance with the applicable statutes, regulations or the terms and conditions of this Award.

29.5. Billing Schedule. In accordance with paragraph 4.8, herein Grantee must submit all payment requests to Grantor within thirty (30) days of the end of the quarter, unless another billing schedule is specified in **PART THREE** or Paragraph 2.3. Failure to submit such payment request timely will render the amounts billed an

unallowable cost which Grantor cannot reimburse. In the event that Grantee is unable, for good cause, to submit its payment request timely, Grantee must timely notify Grantor and may request an extension of time to submit the payment request. Grantor's approval of Grantee's request for an extension cannot be unreasonably withheld. The payment requirements of this Paragraph supersede those set forth in Paragraph 4.8.

ARTICLE XXX
ADDITIONAL MODIFICATION PROVISIONS

30.1. Modifications by Operation of Law. This Agreement is subject to such modifications as the Grantor determines, in its sole discretion, may be required by changes in federal or State law or regulations applicable to this Agreement. Grantor will initiate such modifications, and Grantee will be required to agree to the modification in writing as a condition of continuing the Award. Any such required modification will be incorporated into and become part of this Agreement as if fully set forth herein. The Grantor will timely notify the Grantee of any pending implementation of or proposed amendment to any laws or regulations of which it has notice.

30.2. Discretionary Modifications. If either the Grantor or the Grantee wishes to modify the terms of this Agreement other than as set forth in ARTICLES V and VI and Paragraphs 30.1 and 30.3, written notice of the proposed modification must be given to the other Party. Modifications will only take effect when agreed to in writing by both the Grantor and the Grantee. However, if the Grantor notifies the Grantee in writing of a proposed modification, and the Grantee fails to respond to that notification, in writing, within thirty (30) days, the Grantor may commence a process to suspend or terminate this Award. In making an objection to the proposed modification, the Grantee must specify the reasons for the objection and the Grantor will consider those objections when evaluating whether to follow through with the proposed modification. The Grantor's notice to the Grantee must contain the Grantee name, Agreement number, Amendment number and purpose of the revision. If the Grantee seeks any modification to the Agreement, the Grantee must submit a detailed narrative explaining why the Project cannot be completed in accordance with the terms of the Agreement and how the requested modification will ensure completion of the Grant Activities, Deliverables, Milestones and/or Performance Measures (**Exhibits A**, B and D).

30.3. Unilateral Modifications. The Parties agree that Grantor may, in its sole discretion, unilaterally modify this Agreement without prior approval of the Grantee when the modification is initiated by Grantor for the sole purpose of increasing the Grantee's funding allocation as additional funds become available for the Award during the program year covered by the Term of this Agreement.

30.4. Management Waiver. The Parties agree that the Grantor may issue a waiver of specific requirements of this Agreement after the term of the Agreement has expired. These waivers are limited to non-material changes to specific provisions that the Grantor determines are necessary to place the Grantee in administrative compliance with the requirements of this Agreement. A management waiver issued after the Term of the Agreement has expired will supersede the original requirements of this Agreement that would normally require a modification of this Agreement to be executed. The Grantor will make no modifications of this Agreement not agreed to prior to the expiration of the Agreement beyond what is specifically set forth in this Paragraph.

30.5. Term Extensions. The Grantee acknowledges that all Grant Funds must be expended or legally obligated, and all Grant Activities, Deliverables, Milestones and Performance Measures (**Exhibits A**, B and D) must be completed during the Term of the Agreement. Extensions of the Term will be granted only for good cause, subject to the Grantor's discretion. Pursuant to the Grant Funds Recovery Act (30 ILCS 705/1 *et seq.*), no Award may be extended in total beyond a two (2)-year period unless the Grant Funds are expended or legally obligated during that initial two-year period, or unless Grant Funds are disbursed for reimbursement of costs previously incurred by the Grantee. If Grantee requires an extension of the Award Term, Grantee should submit a written request to the Grant Manager at least sixty (60) days prior to the end of the Award Term or extended Award Term, as applicable, stating the reason for the extension. If Grantee provides reasonable extenuating circumstances, Grantee may request an extension of the Award Term with less than sixty (60) days remaining.

ARTICLE XXXI
ADDITIONAL CONFLICT OF INTEREST PROVISIONS

31.1. Bonus or Commission Prohibited. The Grantee shall not pay any bonus or commission for the purpose of obtaining the Grant Funds awarded under this Agreement.

ARTICLE XXXII
ADDITIONAL EQUIPMENT OR PROPERTY PROVISIONS

32.1. Equipment Management. The Grantee is responsible for replacing or repairing equipment and materials purchased with Grant Funds that are lost, stolen, damaged, or destroyed. Any loss, damage or theft of equipment and materials must be investigated and fully documented, and immediately reported to the Grantor and, where appropriate, the appropriate law enforcement authorities.

32.2. Purchase of Real Property. If permitted by the Award Budget and scope of activities provided in this Agreement, a Grantee may use the Grant Funds during the Award Term for the costs associated with the purchase of real property (as defined by 2 CFR 200.1) either through the use of reimbursement or advanced funds as permitted in Paragraph 2.3 of this Agreement for the following purposes and consistent with the Grantor's bondability guidelines and 2 CFR 200:

(a) Cash payment of the entirety or a portion of the real property acquisition;

(b) Cash Payment of a down payment for the acquisition;

(c) Standard and commercially reasonable costs required to be paid at the acquisition closing (*i.e.*, closing costs); or

(d) Payments to reduce the debt incurred by Grantee to purchase the real property.

32.3. Bonding Requirements. If Grant Funds through this Award are used for construction or facility improvement projects that exceed the Simplified Acquisition Threshold, the Grantee must comply with the minimum bonding requirements listed in 2 CFR 200.326(a) – (c). Grantor will not accept the Grantee's own bonding policy and requirements.

32.4. Lien Requirements. Grantor may direct Grantee in writing to record a lien or notice of State or federal interest on the property purchased or improved with Grant Funds. 2 CFR 200.316. If Grantor makes this direction and the Grantee does not comply, the Grantor may: (a) record the lien or notice of State or federal interest and reduce the amount of the Grant Funds by the cost of recording the lien or notice of State or federal interest, or (b) suspend this Award until Grantee complies with Grantor's direction.

ARTICLE XXXIII
APPLICABLE STATUTES

To the extent applicable, Grantor and Grantee shall comply with the following:

33.1. Land Trust Beneficial Interest Disclosure Act (765 ILCS 405/2.1). No Grant Funds will be paid to any trustee of a land trust, or any beneficiary or beneficiaries of a land trust, for any purpose relating to the land, which is the subject of such trust, any interest in such land, improvements to such land or use of such land unless an affidavit is first filed with the Grantor identifying each beneficiary of the land trust by name and address and defining such interest therein. This affidavit must be filed with the Illinois Office of the Comptroller as an attachment to this Agreement.

33.2. Historic Preservation Act (20 ILCS 3420/1 *et seq.*). The Grantee will not expend Grant Funds under this Agreement which result in the destruction, alteration, renovation, transfer or sale, or utilization of a historic property, structure or structures, or in the introduction of visual, audible or atmospheric elements to a historic property, structure or structures, which will result in the change in the character or use of any historic property, except as approved by the Illinois Department of Natural Resources, Historic Preservation Division. The Grantee must not expend Grant Funds under this Agreement for any project, activity, or program that can result in changes in the character or use of historic property, if any historic property is located in the area of potential effects without the approval of the Illinois Department of Natural Resources, Historic Preservation Division. 20 ILCS 3420/3(f).

33.3. Victims' Economic Security and Safety Act (820 ILCS 180 *et seq.*). If the Grantee has one (1) or more employees, it may not discharge or discriminate against an employee who is a victim of domestic or sexual violence, or who has a family or household member who is a victim of domestic or sexual violence, for taking up to the allowable amount of leave from work to address the domestic violence, pursuant to the Victims' Economic Security and Safety Act. 820 ILCS 180/20(a)(2). The Grantee is not required to provide paid leave under the Victims' Economic Security and Safety Act, but may not suspend group health plan benefits during the leave period. Any failure on behalf of the Grantee to comply with all applicable provisions of the Victims' Economic Security and Safety Act, or applicable rules and regulations promulgated thereunder, may result in a determination that the Grantee is ineligible for future contracts or subcontracts with the State of Illinois or any of its political subdivisions or municipal corporations, and this Agreement may be cancelled or voided in whole or in part, and such other sanctions or penalties may be imposed or remedies invoked, as provided by statute or regulation.

33.4. Equal Pay Act of 2003 (820 ILCS 112 *et seq.*). If the Grantee has one (1) or more employees, it is prohibited by the Equal Pay Act of 2003 from: (a) discriminating between employees by paying unequal wages on the basis of sex for doing the same or substantially similar work; (b) discriminating between employees by paying wages to an African-American employee at a rate less than the rate at which the Grantee pays wages to another employee who is not African-American for the same or substantially similar work; (c) remedying violations of the Equal Pay Act of 2003 by reducing the wages of other employees or discriminating against any employee exercising their rights under the Equal Pay Act of 2003; and (d) screening job applicants based on their current or prior wages or salary histories, or requesting or requiring a wage or salary history from an individual as a condition of employment or consideration for employment. Any failure on behalf of the Grantee to comply with all applicable provisions of the Equal Pay Act of 2003, or applicable rules and regulations promulgated thereunder, may result in a determination that the Grantee is ineligible for future contracts or subcontracts with the State of Illinois or any of its political subdivisions or municipal corporations, and this Agreement may be cancelled or voided in whole or in part, and such other sanctions or penalties may be imposed or remedies invoked, as provided by statute or regulation.

33.5. Steel Products Procurement Act (30 ILCS 565/1 *et seq.*). The Grantee, if applicable, hereby certifies that any steel products used or supplied in accordance with this Award for a public works project shall be manufactured or produced in the United States per the requirements of the Steel Products Procurement Act (30 ILCS 565/1 *et seq.*).

33.6. Business Enterprise for Minorities, Women, and Persons with Disabilities Act and Illinois Human Rights Act (30 ILCS 575/0.01; 775 ILCS 5/2-105). The Grantee acknowledges and hereby certifies compliance with the provisions of the Business Enterprise for Minorities, Women, and Persons with Disabilities Act, and the equal employment practices of Section 2-105 of the Illinois Human Rights Act for the provision of services which are directly related to the Award activities to be performed under this Agreement.

33.7. Identity Protection Act (5 ILCS 179/1 *et seq.*) and Personal Information Protection Act (815 ILCS 530/1 *et seq.*). The Grantor is committed to protecting the privacy of its vendors, grantees and beneficiaries of programs and services. At times, the Grantor will request social security numbers or other personal identifying information. Federal and state laws, rules and regulations require the collection of this information for certain purposes relating to employment and/or payments for goods and services, including, but not limited to, Awards. The Grantor also collects confidential information for oversight and monitoring purposes.

Furnishing personal identity information, such as a social security number, is voluntary; however, failure to provide required personal identity information may prevent an individual or organization from using the services/benefits provided by the Grantor as a result of state or federal laws, rules and regulations.

To the extent the Grantee collects or maintains protected personal information as part of carrying out the Award activities, the Grantee must maintain the confidentiality of the protected personal information in accordance with applicable law and as set forth below.

(a) Personal Information Defined. As used herein, "Personal Information" shall have the definition set forth in the Personal Information Protection Act, 815 ILCS 530/5 ("PIPA").

(b) Protection of Personal Information. The Grantee must use at least reasonable care to protect the confidentiality of Personal Information that is collected or maintained as part of the Award activities and (i) not use any Personal Information for any purpose outside the scope of the Award activities and (ii) except as otherwise authorized by the Grantor in writing, limit access to Personal Information to those of its employees, contractors, and agents who need such access for purposes consistent with the Award Activities. If Grantee provides any contractor or agent with access to Personal Information, it must require the contractor or agent to comply with the provisions of this Paragraph.

(c) Security Assurances. Grantee represents and warrants that it has established and will maintain safeguards against the loss and unauthorized access, acquisition, destruction, use, modification, or disclosure of Personal Information and shall otherwise maintain the integrity of Personal Information in its possession in accordance with any federal or state law privacy requirements, including PIPA. These safeguards must be reasonably designed to (i) ensure the security and confidentiality of the Personal Information, (ii) protect against any anticipated threats or hazards to the security or integrity of Personal Information, and (iii) protect against unauthorized access to or use of Personal Information. Additionally, Grantee will have in place policies, which provide for the secure disposal of documents and information which contain Personal Information, including but not limited to shredding documents and establishing internal controls over the authorized access to such information. 815 ILCS 530/40.

(d) Breach Response. In the event of any unauthorized access to, unauthorized disclosure of, loss of, damage to or inability to account for any Personal Information (a "Breach"), Grantee agrees that it will promptly, at its own expense: (i) report such Breach to the Grantor by telephone with immediate written confirmation sent by e-mail, describing in detail any accessed materials and identifying any individual(s) who may have been involved in such Breach; (ii) take all actions necessary or reasonably requested by the Grantor to stop, limit or minimize the Breach; (iii) restore and/or retrieve, as applicable, and return all Personal Information that was lost, damaged, accessed, copied or removed; (iv) cooperate in all reasonable respects to minimize the damage resulting from such Breach; (v) provide any notice to Illinois residents as required by 815 ILCS 530/10, 815 ILCS 530/12 or applicable federal law, in consultation with the Grantor; and (vi) cooperate in the preparation of any report related to the Breach that the Grantor may need to present to any governmental body.

(e) Injunctive Relief. Grantee acknowledges that, in the event of a breach of this Paragraph, Grantor will likely suffer irreparable damage that cannot be fully remedied by monetary damages. Accordingly, in addition to any remedy which the Grantor may possess pursuant to applicable law, the Grantor retains the right to seek and obtain injunctive relief against any such breach in any Illinois court of competent jurisdiction.

(f) Compelled Access or Disclosure. The Grantee may disclose Personal Information if it is compelled by law, regulation, or legal process to do so, provided the Grantee gives the Grantor at least ten (10) days' prior notice of such compelled access or disclosure (to the extent legally permitted) and reasonable assistance if the Grantor wishes to contest the access or disclosure.

ARTICLE XXXIV
ADDITIONAL MISCELLANEOUS PROVISIONS

34.1. Workers' Compensation Insurance, Social Security, Retirement and Health Insurance Benefits, and Taxes. The Grantee must provide Workers' Compensation insurance where the same is required and accepts full responsibility for the payment of unemployment insurance, premiums for Workers' Compensation, Social Security and retirement and health insurance benefits, as well as all income tax deduction and any other taxes or payroll deductions required by law for its employees who are performing services specified by this Agreement.

34.2. Required Notice. Grantee agrees to give prompt notice to the Grantor of any event that may materially affect the performance required under this Agreement. Any notice or final decision by Grantor relating to (a) a Termination or Suspension (ARTICLE XIII), (b) Modifications, Management Waivers or Term Extensions (ARTICLE XXX) or (c) Assignments (Paragraph 22.2) must be executed by the Director of the Grantor or her or his authorized designee.

ARTICLE XXXV
ADDITIONAL REQUIRED CERTIFICATIONS

The Grantee makes the following certifications as a condition of this Agreement. These certifications are required by State statute and are in addition to any certifications required by any federal funding source as set forth in this Agreement. Grantee's execution of this Agreement shall serve as its attestation that the certifications made herein are true and correct.

35.1. Sexual Harassment. The Grantee certifies that it has written sexual harassment policies that must include, at a minimum, the following information: (i) the illegality of sexual harassment; (ii) the definition of sexual harassment under State law; (iii) a description of sexual harassment, utilizing examples; (iv) the Grantee's internal complaint process including penalties; (v) the legal recourse, investigative and complaint process available through the Department of Human Rights and the Human Rights Commission; (vi) directions on how to contact the Department of Human Rights and the Human Rights Commission; and (vii) protection against retaliation as provided by Sections 6-101 and 6-101.5 of the Illinois Human Rights Act. 775 ILCS 5/2-105(A)(4). A copy of the policies must be provided to the Grantor upon request.

35.2. Federal, State and Local Laws; Tax Liabilities; State Agency Delinquencies. The Grantee is required to comply with all federal, state and local laws, including but not limited to the filing of any and all applicable tax returns. If Grantee is delinquent in filing and/or paying any federal, state and/or local taxes, the Grantor will disburse Grant Funds only if the Grantee enters into an installment payment agreement with the applicable tax authority and remains in good standing with that authority. Grantee is required to tender a copy of all relevant installment payment agreements to the Grantor. In no event may Grantee utilize Grant Funds to discharge outstanding tax liabilities or other debts owed to any governmental unit. **The execution of this Agreement by the Grantee is its certification that: (i) it is current as to the filing and payment of any federal, state and/or local taxes applicable to Grantee; and (ii) it is not delinquent in its payment of moneys owed to any federal, state, or local unit of government.**

35.3. Lien Waivers. If applicable, the Grantee must monitor construction to assure that necessary contractors' affidavits and waivers of mechanics liens are obtained prior to release of Grant Funds to contractors and subcontractors.

35.4. Grant for the Construction of Fixed Works. Grantee certifies that all Projects for the construction of fixed works which are financed in whole or in part with funds provided by this Agreement will be subject to the Prevailing Wage Act (820 ILCS 130/0.01 *et seq.*) unless the provisions of that Act exempt its application. In the

construction of the Projects, Grantee must comply with the requirements of the Prevailing Wage Act including, but not limited to: (a) paying the prevailing rate of wages required by the Illinois Department of Labor, or a court on review, to all laborers, workers and mechanics performing work with Grant Funds provided through this Agreement, (b) inserting into all contracts for such construction a stipulation to the effect that not less than the prevailing rate of wages as applicable to the Project must be paid to all laborers, workers, and mechanics performing work under this Award; and (c) requiring all bonds of contractors to include a provision as will guarantee the faithful performance of the prevailing wage clause as provided by contract.

THE REMAINDER OF THIS PAGE IS INTENTIONALLY LEFT BLANK.

PART THREE – PROJECT-SPECIFIC TERMS

In addition to the uniform requirements in **PART ONE** and Grantor-Specific Terms in **PART TWO**, Grantor has the following additional requirements for this Project:

ARTICLE XXXVI
REPORT DELIVERABLE SCHEDULE

36.1. External Audit Reports. External Audit Reports may be required. Refer to ARTICLE XII of this Agreement to determine whether you are required to submit an External Audit Report and the applicable due date.

36.2. Annual Financial Reports. Annual Financial Reports may be required. Refer to Paragraph 12.2 of this Agreement to determine whether you are required to submit Annual Financial Reports.

36.3. Required Periodic Reports. Below is the required periodic reporting schedule for this Award.

October 2025

- Quarterly Periodic Financial Report (10/30/2025) - Covering Period of 08/01/2025 - 09/30/2025; Send To: Grant Manager
- Quarterly Periodic Performance Report (10/30/2025) - Covering Period of 08/01/2025 - 09/30/2025; Send To: Grant Manager

January 2026

- Quarterly Periodic Financial Report (01/30/2026) - Covering Period of 10/01/2025 - 12/31/2025; Send To: Grant Manager
- Quarterly Periodic Performance Report (01/30/2026) - Covering Period of 10/01/2025 - 12/31/2025; Send To: Grant Manager

April 2026

- Quarterly Periodic Financial Report (04/30/2026) - Covering Period of 01/01/2026 - 03/31/2026; Send To: Grant Manager
- Quarterly Periodic Performance Report (04/30/2026) - Covering Period of 01/01/2026 - 03/31/2026; Send To: Grant Manager

July 2026

- Quarterly Periodic Financial Report (07/30/2026) - Covering Period of 04/01/2026 - 06/30/2026; Send To: Grant Manager
- Quarterly Periodic Performance Report (07/30/2026) - Covering Period of 04/01/2026 - 06/30/2026; Send To: Grant Manager

August 2026

- End of grant Closeout Financial Report (08/14/2026) - Covering Period of 08/01/2025 - 06/30/2026; Send To: Grant Manager
- End of grant Closeout Performance Report (08/14/2026) - Covering Period of 08/01/2025 06/30/2026; Send To: Grant Manager

36.4. Changes to Reporting Schedule. Changes to the schedules for periodic reporting, the external audit reports and the annual financial reports do not require a formal modification to this Agreement pursuant to

Paragraph 22.4 and ARTICLE XXX, and may be changed unilaterally by the Grantor if necessitated by a change in the project schedule or at the discretion of the Grantor. The Grantee may not modify the reporting deliverable schedules in ARTICLES X, XI, XII and XXXVI unilaterally, and must obtain prior written approval from Grantor or the Grant Accountability and Transparency Unit of the Governor's Office of Management and Budget, if applicable, to change any reporting deadlines.

ARTICLE XXXVII
GRANT-SPECIFIC TERMS/CONDITIONS

37.1. Compensation To The Grantee.

(a) Method of Compensation. The method of compensation shall be in accordance with the applicable State laws relative to such compensation by which the Grantor is governed. Grantee shall comply with direction issued by the Grantor as to procedures to be followed when requesting disbursement of Grant Funds. All payment requests submitted by the Grantee shall be reviewed by the Grantor to ensure that such requests are:

(i) in accordance with the approved Award Budget;
(ii) in accordance with the provisions of this Agreement and any special terms and conditions of approved funding requests. Any expenditure of Grant Funds which does not comply with these provisions will be subject to the enforcement remedies at 2 CFR 200.339.

(b) Grantor Review of Expenditures. When making a request for funding, the Grantee shall provide Grantor support documentation evidencing that the costs are allowable, necessary and reasonable in accordance with this Agreement and all applicable laws and regulations. Grantor will review such documentation prior to approving Grantee's requests for funds. However, the Grantee acknowledges that, because the Grantor's initial determination will be based solely on the Grantee's documentation and self-declarations and/or attestations, the Grantor's initial determination shall not be considered a final acceptance or approval of the Award costs. Permissibility of all Award costs are subject to subsequent on-site monitoring reviews and/or audits of the Grantee's books and records as well as corresponding source documentation, including, but not limited to, detailed invoices received from and checks paid to external vendors for services provided during the course of the Award Term.

37.2. Funding Terms and Restrictions.

(a) Reimbursement Limitation. The Grantee cannot be reimbursed for costs incurred in excess of the total approved Grant Budget. The Grantee may be reimbursed for costs exceeding amounts budgeted by specific cost categories only in accordance with provisions of Articles VI, XXVII and XXX.

(b) Budget Modifications. The Grantee should obtain approval prior to incurring expenditures which necessitate a change in the approved Grant Budget, unless permitted as a discretionary line item transfer pursuant to paragraphs 6.2 and 27.1 herein. The Grantor reserves the right to withhold funds for such expenditures until a revised Budget has been submitted by the Grantee and approved by the Grantor.

(c) Overpayment. In addition to the return of unspent Grant Funds at the end of the expiration of this Agreement pursuant to paragraph 4.3 herein, the Grantee agrees to repay the Grantor for any funds that are determined by the Grantor to have been spent improperly in accordance with

applicable regulations or rules.

(d) Supportive Services & Participant Support Costs. If Grantor approves of Supportive Services as part of Grantee's Budget, costs must meet the basic considerations at 2 CFR 200.402 – 200.411.

37.3. Travel Regulations. Costs in accordance with 2 CFR 200.475 and the latest State of Illinois Travel Regulations or such reasonable travel policies approved and adopted by the Grantee are allowable for expenses for transportation, lodging, subsistence, and related items incurred by Grantee's employees who are in travel status on official business necessary to the grant program. If State of Illinois Travel Regulations are not followed by the Grantee, the Grantee must have on file its approved travel policy for reference by the Grantor, the Comptroller of the State of Illinois, Comptroller General of the United States, or any of their duly authorized representatives. Provided, however, that travel expenses which exceed limitations established by federal statute or regulation (including OMB circulars, etc.) applicable to this Agreement are not allowable costs under this Agreement. For domestic travel to be an allowable cost, it must be necessary, reasonable, allocable and conform to the Grantee's written policies and procedures. *See also* 30 ILCS 708/130.

37.4. Reports Required. The Grantee shall submit programmatic and expenditure reports as required pursuant to written direction issued by the Grantor to the Grantee.

37.5. Monitoring And Evaluation. Grantor will periodically monitor and evaluate programmatic activities and the financial records pursuant to this Agreement. The Grantee will be monitored for compliance with all applicable federal and State laws, regulations, and rules, and Grantor policies applicable to this Agreement. The Grantee's performance will be assessed to gauge its impact upon the target population and for the effective and efficient utilization of the funds.

37.6. Equipment and Property Management. The Grantee may not purchase nonexpendable equipment exceeding the amount specified in 2 CFR 200.1 (equipment definition) without the Grantor's prior written approval. 2 CFR 200.439.

37.7. Managing Subawards and Subrecipients.

(a) Monitoring. The Grantee is responsible for the monitoring of any approved subrecipient, ensuring that the terms and conditions of this Agreement are in all subaward packages and that the subrecipient is in compliance with all applicable regulations and the terms and conditions of this Award. 2 CFR 200.101(b); 2 CFR 200.332. *See also* ARTICLE XIV, herein.

(b) Agreements. Pursuant to paragraph 14.1 herein, Prior Approval by Grantor is required for all subcontracts and subawards entered into by Grantee related to this Award. The Grantee shall provide the Grantor with copies of all subaward and contractual agreements between the Grantee and all subrecipients and contractors related to the performance of this Award. Grantee shall provide these agreements to the Grantor prior to receiving its first funding disbursement. If Grantee enters into any subaward or contractual agreement(s) related to this Award during the Award Term, Grantee shall provide to Grantor such agreements within five (5) calendar days of full execution of the agreement(s).

37.8. Procurement. The Grantee shall follow the procurement standards as established in 2 CFR §§ 200.317 – 200.327 when purchasing goods and services using Grant Funds. Grantee shall ensure compliance with 2 CFR 200.323, if applicable, and must ensure that every purchase order or other contract includes any clauses required by 2 CFR 200.327. In addition, Grantee must follow the procurement requirements at 2 CFR 200.319, which calls for free and open competition. Effective October 1, 2018, pursuant to Office of Management and Budget Memorandum M-18-18, dated June 20, 2018, the federal financial assistance awards threshold for micro-purchases increased to $10,000 and the threshold for simplified acquisitions increased to $250,000.

37.9. Assurances. The Grantee hereby assures and certifies that no part of the payments to be made by the Grantor to the Grantee under this Agreement are available to the Grantee under the terms of any other federal, State or local government grant or subsidy existing as of the date of this Agreement.

MEMORANDUM

To: Village Manager Cara Pavlicek
From: Director of Public Works Kelly Hamill
Date: 2026-07-14
Subject: A Resolution Waiving Competitive Bidding and Authorizing a 48-Month Lease Agreement Renewal for Refuse and Recycling Stations in the Central Business District from Bigbelly Solar, LLC of Needham, Pennsylvania

Overview

The Village of Northbrook leases enclosed refuse and recycling stations to offer convenient refuse and recycling disposal options in the Central Business District for both residents and visitors.

Fiscal Impact

The adopted FY2027 Budget provides sufficient funds in General Fund Account No. 11-4100-554-00 (Other Professional Services) for the continued lease of refuse and recycling stations, the proprietary cloud-based software platform and mobile application services ("Services") from Big Belly Solar, LLC of Needham, Massachusetts ("Vendor").

With the conclusion of the initial 36-month lease term, staff recommends renewing the agreement with the Vendor for an additional 48-month lease term, in the total not to exceed amount of $88,592. A breakdown of the costs for the first year of the 4-year term is in Table 1 below. The total costs per year for the 4-year term is in Table 2 below.

Table 1. Year 1 Costs (FY27) of 4-Year Term

Account	Account No.	Budget	Available	Requested	Remaining	Within Budget
General Fund - Other Professional Services	11-4100-554-00	$395,995	$54,201	$22,148	$32,053	Yes

Table 2. Total Costs per Fiscal Year for the 4-Year Term

FY2027	FY2028	FY2029	FY2030	4-Year Total Cost
$22,148	$22,148	$22,148	$22,148	$88,592

Recommendation

Approval.

Strategic Priority
Infrastructure. Maintain a consistent high-quality of life through capital investment, continued focus on sustainability, and facilities that meet operational needs.

Background

In order to offer convenient refuse and recycling disposal options in the Central Business District (CBD), the Village of Northbrook has 13 leased enclosed stations, each includes one refuse receptable and one recycling receptable, for a combined total of 26 receptacles. These stations help maintain clean public spaces, reinforce the Village's sustainability goals, and feature smart monitoring technology that allows staff to manage collections efficiently and adjust service levels as needed.

Three (3) high-capacity receptacles are placed in high traffic areas within the CBD that are equipped with compaction technology that increases their capacity to up to 150 gallons. All receptacles are equipped with sensors that connect to the proprietary cloud-based software platform and mobile application. This technology enables Village staff to monitor and generate reports on collection activity, fullness levels, container status, and GPS location. The waste and recycling materials are collected twice a week by the Village's refuse and recycling hauler, Lakeshore Recycling Systems (LRS).

In September 2022, staff researched solutions to address the overflow of traditional refuse containers during peak periods in the CBD. Overflowing refuse created an unsightly appearance and attracted pests due to the open design of the containers. Bigbelly Solar, LLC ("Vendor") was identified as providing a comprehensive solution to address these issues through enclosed, sensor-equipped refuse and recycling stations, and was awarded a contract for a 36-month lease agreement with Resolution 2023-11 on February 7, 2023.

Prior to the conclusion of the initial 36-month lease, staff worked with the Vendor to develop a new 48-month lease agreement that continues to provide warranty coverage for hardware components and network communication for the cloud-based software platform and mobile application for the full lease term, as well as annual maintenance provided by the Vendor. Because the Vendor retains proprietary rights to its equipment, software, and related services, it is considered a sole source provider.

At the conclusion of the 48-month lease term, the Village will have the option to either enter into a new lease agreement or purchase the receptacles from the Vendor.

Staff recommends entering into a 48-month lease agreement renewal with the Vendor for the Services, from July 14, 2026 through July 13, 2030, at an annual cost of $22,148, for a total not-to-exceed amount of $88,592 over the full 48-month lease term.

A Resolution Waiving Competitive Bidding and Authorizing a 48-Month Lease Agreement Renewal for Refuse and Recycling Stations in the Central Business District from Bigbelly

Solar, LLC of Needham, Pennsylvania
Exhibit A - 48-Month Lease Agreement Renewal with Bigbelly Solar, LLC.
Exhibit B - Initial 36-Month Lease Agreement with Bigbelly Solar, LLC.
Supplemental - Bigbelly Station Specifications

Resolution 2026-_____

BE IT RESOLVED by the President and Board of Trustees of the Village of Northbrook, County of Cook and State of Illinois, THAT:

A Resolution Waiving Competitive Bidding and Authorizing a 48-Month Lease Agreement Renewal for Refuse and Recycling Stations in the Central Business District from Bigbelly Solar, LLC of Needham, Pennsylvania

is hereby adopted, as follows:

Section 1. Recitals.

The Village of Northbrook leases enclosed refuse and recycling stations to offer convenient refuse and recycling disposal options in the Central Business District (CBD). Each station includes one refuse receptable and one recycling receptable, for a total of 26 receptacles. Three high-capacity receptacles are placed in high traffic areas within the CBD that are equipped with compaction technology that increases their capacity to up to 150 gallons. All receptacles are equipped with sensors that connect to a cloud-based software platform and mobile application and enables Village staff to monitor and generate reports on collection activity, fullness levels, container status, and GPS location. The containers are serviced twice per week by the Village's refuse and recycling hauler, Lakeshore Recycling Systems.

In September 2022, staff researched solutions to address the overflow of refuse containers during peak periods in the CBD. Overflowing refuse created an unsightly appearance and attracted pests due to the open design of the prior containers. Bigbelly Solar, LLC of Needham, Pennsylvania ("***Vendor***") was identified as providing a comprehensive solution to address these issues through enclosed, sensor-equipped refuse and recycling stations, and was awarded a contract for a 36-month lease agreement with Resolution 2023-11 on February 7, 2023.

Prior to the conclusion of the initial 36-month lease, staff worked with the Vendor to develop a new 48-month lease agreement that continues to provide warranty coverage for hardware components and network communication for the cloud-based software platform and mobile application for the full lease term, as well as annual maintenance ("***Services***") provided by the Vendor, in the total not to exceed amount of $88,592. In addition, because the Vendor retains proprietary rights to its equipment, software, and related services, it is considered a sole source provider.

The adopted FY2027 Budget provides sufficient funds in General Fund Account No. 11-4100-554-00 (Other Professional Services) for the first year of the lease, at an annual cost of $22,148. The annual lease cost will remain $22,148 for each subsequent year of the agreement. Staff is requesting spending authority not to exceed the FY27 budgeted amount of $26,000. Funds will be drawn from this account at the prices outlined in ***Exhibit A***.

Based on these factors, staff recommends entering into a 48-month lease agreement renewal with the Vendor for the Services for the term of July 14, 2026 through July 13, 2030, in the total not to exceed amount of $88,592 ("***Agreement***"). The President and the Board of Trustees intend to retain funding in FY2028, FY2029, and FY2030 Budgets as approved for the term of the Agreement.

The President and the Board of Trustees have considered the Agreement and determined

that it is in the best interests of the Village and the public to enter into the Agreement.

Section 2. Waiver of Competitive Bids.

The requirement of competitive, sealed bids be solicited for this Agreement is hereby waived based on the Vendor retaining proprietary rights to its equipment, software, and related services.

Section 3. Approval of Agreement.

The Agreement with the Vendor is approved in a form acceptable to the Village Attorney and the Village Manager.

Section 4. Authorization to Execute Agreement.

The Village Manager and Village Clerk shall be, and are hereby, authorized and directed to execute and seal, on behalf of the Village, the Agreement only after receipt by the Village Clerk of at least three original copies of the Agreement executed by the Vendor; provided, however, that if such executed copies of the Agreement are not received by the Village Clerk within 60 days after the date of adoption of this Resolution, then this authority to execute and seal shall, at the option of the President and the Board of Trustees, be null and void.

Section 5. Authorization of Expenditure.

The Village Manager is hereby authorized and directed to execute such documents and make such payments as are necessary to complete the Agreement at the pricing set forth in ***Exhibit A***.

Approved:

RESULT:
MOVER:
SECONDER:
AYES:
NAYES:
ABSTAIN:
ABSENT:

ATTEST:

_____
Village President

_____
Village Clerk

Docusign Envelope ID: 1A59F7D0-ABD1-8DE5-81CF-AC46D1782CAD

Quote Number: Q42105-6
July 9, 2026

First Amendment to CSA 10312

VILLAGE OF NORTHBROOK

Program Overview

Connect is Bigbelly's turnkey smart city solution which delivers a connected smart waste and recycling platform and provides Customers with a partner to help deploy, manage, and optimize their customized solution over a 48-month term. This subscription-based service was designed to deliver a flexible, scalable, smart platform that transforms waste operations today, and enables Customers to benefit from the technology innovations of the future.

Connect Renewal 48 Month Term

System Software

- CLEAN Management Console Licenses for Full Term
- CLEAN Mobile Software Licenses for Full Term

Automated System Monitoring

- Automated System Diagnostics and Alerts

Equipment/Hardware

- Custom Configuration as Detailed Below

Cleaning and Inspection

- Annual Comprehensive Station Cleaning
- Annual Station Inspection

Customer Support

- Customer Support Hotline and trained field service professionals

Warranty

- Hardware Parts Warranty for Full Term
- Expanded Warranty Coverage for Battery End-of-Life Replacement and Network Communication Upgrades for Full Term

Equipment/Hardware Configuration

10	Smart/Smart Double Station with Messgae Panels
3	Smart Max/Smart Double Station with Message Panels

Contract Start Date: 7/14/2026
Contract End Date: 7/9/2030

Serial Numbers Covered via Renewal:
500005620,500005621,500005956,501001018,501001019,501001020,501001021,501001022,501001023,501001024,
501001025,501001026,501001027,502001290,502001291,502001292,502001293,502001294,502001295,502001296,
502001297,502001298,502001299,502001300,502001301,502001302

Total Monthly System Cost	$1,845.65

[1]Pricing is valid for 30 days from July 9, 2026.
[2]Sales Tax is NOT included in above pricing.
[3]Pricing is subject to Connect Program Terms and Conditions.

The Connect Services for the Renewal which the Customer is purchasing pursuant to this Quote shall be governed by the Connect Services Agreement No. 10312 between Bigbelly and the Customer dated as of February 27, 2023, for the Initial Term and any Renewal Term. Notwithstanding the above, Parties agree that upon expiration of this First Amendment Renewal Term, Bigbelly will de-install and remove the above-mentioned Equipment at no cost to the Customer.

ACCEPTED AND AGREED BY:

BIGBELLY

Signed by:
By: Eric Hunt Jr
856DC686D330484...
Print Name: Eric Hunt Jr
Title: VP Finance/Treasurer
Date: 7/9/2026

CUSTOMER

By: _____
Print Name: _____
Title: _____
Date: _____

CONNECT SERVICES AGREEMENT

Agreement No. 10312

CUSTOMER				
Full Legal Name: **VILLAGE OF NORTHBROOK, ILLINOIS**		Legal Contact:	Kelly Hamill
Billing Address: 655 Huehl Road, Northbrook IL 60062		Billing Contact:	Steve Fritz
		Billing Phone:	847-272-4711
		Billing Email:	steve.fritz@northbrook.il.us
Sales Tax Status:	☒ Exempt (Attach Certificate)	TIN or FEIN:	36-6006017
	☐ Non-Exempt		
Insurance:	☐ Self-Insured		
	☐ Insurance Certificate Attached		
Shipping Address: 655 Huehl Rd. Northbrook IL 60062		Shipping Contact:	Steve Fritz
		Shipping Phone:	847-272-4711
		Shipping Email:	steve.fritz@northbrook.il.us

Connect Services Schedule (LX)

System Software
- CLEAN Management Console Licenses for Full Term
- CLEAN Mobile Software Licenses for Full Term

Automated System Monitoring
- Automated System Diagnostics and Alerts

Equipment/Hardware
- Custom Configuration as Detailed Below

Cleaning and Inspection
- Annual Comprehensive Station Cleaning
- Annual 21-Point Station Inspection

Station Installation
- On-Site Installation for Stations

Limited Warranty
- Repair and replacement of defective Stations and Parts, throughout the Term of the Connect Services (includes battery)

Setup and Training
- CLEAN Management Console Software Account Setup
- System Training & Onboarding

Customer Support
- Customer Support Hotline and Trained Field Service Professionals

Equipment/Hardware Configuration

3	HC5/SC5.5 Double Stations with Hoppers, Foot Pedals, and Message Panels.
10	SC5.5/SC5.5 Double Stations with Hoppers, Foot Pedals, and Message Panels.

Connect Services Fees: Total Monthly System Cost	$2,171.98
Three (3) Boxes of HC Bags (50 Bags per Box): One Time Fee	$115.50
Seven (7) Boxes of SC Bags (100 Bags per Box): One Time Fee	$406.00
Shipping: One Time Fee	$4,090.00

This Connect Services Agreement (the "Agreement"), is made and entered into as of 2/22/2023 (the "Effective Date"), by and between the Customer identified above (the "Customer") and Big Belly Solar, LLC a Delaware limited liability company located at 150 A Street, Suite 103, Needham, MA 02494 ("Bigbelly"), and incorporates herein the above Connect Services Schedule, the attached

Terms and Conditions, and such other documents and attachments as may be referenced herein. Bigbelly and Customer shall each be referred to herein as a "Party" and collectively as the "Parties." The initial term of the Connect Services to be provided under this Agreement shall be thirty-six (36) months (the "Initial Term"). The payment terms of this Agreement are monthly in arrears (the "Payment Terms"). This Agreement may be executed in counterparts, each of which shall be an original, but which together shall constitute one and the same instrument. Intending to be legally bound, each of the Parties has caused this Agreement to be executed by its duly authorized representative as of the Effective Date.

VILLAGE OF NORTHBROOK, ILLINOIS ("Customer")

By: Cara Pavlicek

Printed Name: CARA PAVLICEK

Title: VILLAGE MANAGER

Date: 2-27-23

BIG BELLY SOLAR, LLC ("Bigbelly")

By: DocuSigned by: Brian Phillips B23903E415E1472...

Printed Name: Brian Phillips

Title: CEO

Date: 2/22/2023

ATTACHMENT A
CONNECT SERVICES TERMS AND CONDITIONS

Capitalized and undefined terms used in these Terms and Conditions shall have the meaning set forth herein. Unless otherwise agreed to in writing by the Parties, the Terms and Conditions of this Agreement are intended to and shall govern: (a) Customer's purchase of the Connect Services for the Equipment specified herein for (i) the Initial Term and (ii) any Renewal Term for such Connect Services for such Equipment; and (b) the Customer's purchase of Connect Services for any Additional Equipment, if added in the future by the Customer, for (i) the Initial Term and (ii) any Renewal Term for such Connect Services for such Additional Equipment.

1.0 Definitions

1.1 Services. The term "Connect Services" or "Services" means Connect by Bigbelly, including Software, Equipment, Equipment delivery, installation, cleaning and inspection, customer service and equipment maintenance, repair and replacement of defective Equipment throughout the Term of the Connect Services pursuant to Bigbelly's then-standard Limited Warranty for Connect Services Customers located in the United States and Canada, set up and training, and any other features, products or services provided as part of and included under the terms of this Agreement.

1.2 Equipment. The term "Equipment" means station hardware and accessories provided by Bigbelly to Customer for use with the Services.

1.3 Software. The term "Software" refers to CLEAN cloud-based software for use with mobile or desktop devices intended for use by Customer with the Equipment and the Services.

2.0 Term of Agreement

2.1 Term. This Agreement shall commence as of the Effective Date and may be terminated as provided herein. The Initial Term of the Connect Services to be provided pursuant to this Agreement will commence on the date that all Equipment ordered pursuant to this Agreement has been delivered to the Customer and received at Customer's receiving location. Upon expiration of the Initial Term of the Connect Services, the Initial Term will automatically renew for a subsequent renewal term equal in length to the Initial Term (the "Renewal Term") unless terminated according to Section 6.7 below. As used herein, "Term" shall mean the Initial Term of the Connect Services and any applicable Renewal Term(s). Except to the extent otherwise provided herein, the Term of the Connect Services is non-cancelable.

2.2 Non-Renewal. If Customer elects not to renew the Initial Term or a Renewal Term of the Connect Services, Customer must provide written notice to Bigbelly at least three (3) months prior to the expiration of the Initial Term or the then-current Renewal Term.

3.0 Fees Payable by Customer

3.1 Fees. Customer agrees to pay, during the Term, the Connect Services Fees and any one-time fees specified in the Connect Services Schedule, and any fees payable for additional customization and/or related services. Connect Services Fees shall become payable on the date by which all the Equipment ordered pursuant to this Agreement has been delivered to the Customer. Bigbelly shall submit invoices to Customer during the Term of this Agreement per the Payment Terms outlined in the above Connect Services Schedule, and Customer shall pay each invoice on or before the date due. All payments shall be made by check or, at Customer's option, may be automatically deposited to the account of Bigbelly as authorized by Customer by means of Customer submitting a signed Pre-authorization Payment Form ("PAF") identical to the PAF attached hereto as Attachment B or in such other form as may be acceptable to Bigbelly. Any failure by Bigbelly to provide an invoice in a timely manner shall not affect Customer's obligation to make payments. Whenever any sum due hereunder is not paid when due, Customer agrees to pay to Bigbelly, on the next due date, a late charge equal to five percent (5%) of the amount of such late payment (but not less than $10.00), but only to the extent permitted by law. Late payments are also subject to interest at the lesser of the rate of eighteen percent (18%) per annum or the maximum rate permitted by law.

3.2 Increase in Connect Services Fees. Connect Services Fees are guaranteed for the first twenty-four (24) months of Services. Thereafter, Connect Services Fees are subject to year-to-year increases equal to the rate of inflation as reflected by the Consumer Price Index – Urban for all US Cities, unadjusted ("CPI-U"). Bigbelly will provide Customer at least sixty (60) days prior notice of a price change.

4.0 Obligations of the Parties

4.1 Bigbelly's Obligations

(A) Equipment. Bigbelly will provide the Equipment identified in the Connect Services Schedule on a rental basis to Customer during the Term of the Agreement. The Equipment will be either new and/or refurbished equipment.

(B) System Software. The CLEAN™ Software includes communication services and access to the CLEAN™ Management Console and CLEAN™ Mobile. Customer's use of the Software is subject to the CLEAN™ Software License Agreement, the terms and conditions of which are incorporated herein by reference.

(C) Equipment Delivery. Bigbelly will deliver the Equipment at Customer's expense to Customer's receiving dock or to a location mutually agreed upon by the Parties before the shipment. Bigbelly hereby warrants that the Equipment shall be: (i) of good and merchantable condition, (ii) free from defects and malfunctions, (iii) free of liens, security interests or other encumbrances, (iv) in compliance with all applicable laws, rules, regulations, and applicable governmental orders, and (v) fit for the purpose for which the Equipment is intended.

(D) Station Installation. Bigbelly Equipment will be installed at mutually agreed upon locations, including semi-permanent attachment to the ground. Installation will be in accordance with the delivery and installation schedule agreed to by the Parties.

(E) Setup and Training. Bigbelly shall, at its expense, provide Customer with Equipment and Software setup and training. The parties shall agree upon the location and method of such training.

(F) Standard Limited Warranty – Repair and Replacement of Defective Equipment and Parts. Customer shall receive the benefits of Bigbelly's then-standard Limited Warranty for Connect Services Customers located in the United States and Canada throughout the Term of the Connect Services provided under this Agreement (the terms and conditions of which are available upon request and are incorporated herein by reference).

(G) Customer Support and Equipment Maintenance. Except for losses described in Section 5.2 below, Bigbelly will support the Customer in the maintenance of the Equipment at its sole discretion and expense in order to optimize up time. Technical Customer Support is available Monday through Friday, 7am to 6 pm EST to guide Customer in troubleshooting, repair and replacement efforts and to assist with parts ordering. In addition, Bigbelly maintains a network of trained Field Service professionals available for dispatch upon Customer request to investigate and resolve issues in the field.

Replacement batteries for the Equipment, when needed in Bigbelly's discretion in order to maintain the normal operation of the Equipment, will be provided during the Term at no additional cost to Customer. If, however, station operating conditions change such that insufficient sunlight is available for normal station operations (for example, Customer moves a station into storage and fails to switch off station, or places a station under awning), resulting in premature failure of a battery or batteries, then the battery or batteries will be replaced at Customer expense.

(H) Removal. Upon expiration or termination of the Term, Bigbelly will de-install and remove the Equipment at Customer's expense, and store the Equipment until pickup by Bigbelly at a mutually agreed upon warehouse location, at Customer's expense. Equipment so removed shall be in operational condition and free of any damage for which Customer is responsible pursuant to Section 5.2 below.

(I) Subcontractor Services. Bigbelly may contract with third parties to provide the Services.

4.2 Customer's Obligations

(A) Customer Information & Access. Customer agrees that Bigbelly's ability to perform the Services in a timely manner is dependent upon access to Customer's installation information and locations. Deadlines imposed by this Agreement shall be extended in the event that Customer fails to provide such information and/or access in a timely manner.

(B) Shipping. Customer agrees to pay for shipping expenses and to provide an appropriate facility at which the Equipment can be received, inspected, and staged until the Equipment is installed.

(C) Site Preparation. Customer agrees to provide a poured concrete pad if the intended installation surface does not meet Bigbelly's specifications. If Customer's installation surface does not meet such specifications, any additional cost associated with Bigbelly's efforts to properly prepare the surface will be at Customer's expense. The Customer is responsible for the removal from the locations at which the Equipment will be installed of any existing non-Bigbelly bins or other items.

(D) Operational Safety. Customer agrees to provide immediate notice to Bigbelly with respect to any damage or other event which causes the Equipment to pose a public safety issue or create unsafe operating conditions, and Customer shall take prompt action, if necessary, to eliminate such public or operator safety issues. Customer will promptly service or replace any Equipment that Customer has identified as causing a public safety issue or creating unsafe operating conditions. If after applying its best efforts, Customer cannot resolve the issue, Customer will contact Bigbelly Customer Service and Bigbelly will endeavor to resolve the issue at Bigbelly's expense, unless the unsafe operating condition is due to a Loss as described in Section 5.2.

(E) Automated System Monitoring & Customer Support Escalation - Customer will respond to routine maintenance and repair issues it observes or of which it is notified via automated CLEAN alerts. Customer will use best efforts to promptly resolve issues and may contact Bigbelly Customer Service to receive troubleshooting assistance and instructions for proper repair. If a replacement part or parts is/are needed to resolve the issue, Customer will contact Bigbelly Customer Service to request the part(s). If Customer best efforts do not resolve the issue, Customer should contact Bigbelly Customer Service.

If Bigbelly Field Service is dispatched, and Bigbelly determines that the issue is due to (i) failure by Customer to use best efforts to resolve the issue, (ii) due to Customer error, or (iii) due to damage as described in Section 5.2 below, Bigbelly reserves the right to bill Customer for incurred expenses. Furthermore, if a replacement part is provided and Bigbelly determines that the original part failed due to misuse or abuse, Customer is responsible for replacement cost per Section 5.2 below.

(F) Cleaning & Inspection – Up to three (3) cleaning and inspection visit from Bigbelly are included during the Initial Term. One cleaning and inspection visit per every 12-month period shall be made available upon request at no cost to Customer. Unused cleaning visits will lapse and cannot be carried over to a subsequent year. Customer will use best efforts to maintain general cleanliness of Equipment throughout the Term. If, after applying best effort to maintain Equipment cleanliness, Customer finds that the Equipment needs an additional cleaning and inspection visit, Customer may contact Bigbelly Customer Support to request a cleaning and inspection visit. Additional cleaning and inspection visits that are not included in the terms of this Agreement will be at Customer's expense.

(G) Insurance. This Section 4.2(G) shall not be applicable if Customer has provided evidence of self-insurance acceptable to Bigbelly and maintains such self-insurance in full force and effect. During the Term, Customer will keep the Equipment insured against all risks of loss or damage in an amount not less than the replacement cost thereof, with deductible not to exceed $15,000.00 and without co-insurance. During the Term, Customer will also maintain commercial general liability insurance covering both bodily injury and property damage of at least $1,000,000 per occurrence/$2,000,000 annual aggregate. Bigbelly and its assigns will be named as loss payee on the Property insurance and additional insured on General Liability insurance. Customer will pay all premiums for such insurance and must deliver proof of insurance coverage satisfactory to Bigbelly. If Customer does not provide such insurance, it agrees that Bigbelly has the right, but not the obligation, to obtain insurance against theft and physical damage and add an insurance fee to the amount due from Customer.

(H) Equipment Relocation. Within five (5) business days following relocation of any Equipment, Customer shall notify Bigbelly in writing of the specific location of such Equipment.

5.0 Equipment Rental Terms and Conditions

5.1 Title To and Use of Equipment

(A) Title. As further set forth in Section 6.4 below, Bigbelly is and will at all times be the sole owner of the Equipment. Customer shall not acquire any title or interest, legal or equitable, in the Equipment, other than the use rights set forth in this Agreement. In the event this Agreement is deemed to be a disguised sale, Customer hereby grants to Bigbelly a security interest in the Equipment (and all accessions thereto and substitutions therefor) and the proceeds thereof.

(B) Use of Equipment. Customer shall not use the Equipment for other than the intended purposes. Customer shall ensure safe operation of the Equipment by trained personnel. Customer shall comply with all Bigbelly and governmental guidelines, laws, rules, regulations and ordinances applicable to the use and operation of the Equipment.

(C) No Pledge. Customer shall not pledge, lend, create a security interest in or permit any lien to attach to the Equipment or any part thereof or attempt in any other manner to dispose the Equipment.

(D) No Attachments. Customer represents and warrants that the Equipment is, and shall at all times remain, fully removable personal property notwithstanding any affixation or attachment to real property or improvements. Customer shall give Bigbelly immediate notice of any such attachment or other judicial process affecting the Equipment and shall immediately take all action necessary to remove such attachment and terminate the effect of such judicial process on the Equipment.

(E) Equipment Inspection Rights. Bigbelly and its agents shall have the right to enter any premises where Equipment is located to inspect such Equipment at any time with reasonable advance notice to Customer.

5.2 Risk of Loss. Except as otherwise provided in Bigbelly's then-standard Limited Warranty for Connect Services Customers Located in the United States and Canada, from the time of delivery of Equipment by Bigbelly to Customer until the Equipment is removed by Bigbelly, Customer will bear the entire risk of whole or partial loss, theft, destruction or damage to the Equipment resulting: (a) from any causes other than Bigbelly's or its employees', or its

contractors', or its agents' negligent actions or omissions with respect to the Equipment, or (b) from the requisition of the Equipment by any governmental entity, or expropriation or the taking of the Equipment by eminent domain or otherwise (collectively, "Loss"). Customer will give Bigbelly written notice within 10 days of any Loss ("Loss Notice"). If any Equipment is damaged and can be economically repaired, Bigbelly will promptly repair such Equipment to good working order and condition and Customer agrees to immediately pay, on demand, all costs and expenses incurred by Bigbelly in connection therewith. If any Equipment is damaged and cannot be economically repaired, Bigbelly will promptly replace such Equipment and Customer agrees to immediately pay Bigbelly, on demand, the replacement cost of such Equipment and all costs and expenses incurred by Bigbelly in connection with such replacement. Subject to Bigbelly's obligations under this Section 5.2, this Agreement shall remain in full force and effect notwithstanding any Loss.

6.0 General Terms and Conditions

6.1 Taxes and Other Charges. Customer is responsible for all taxes (including sales, use and personal property tax), fees, and assessments (collectively, "Taxes") that may be imposed by any governmental entity or taxing authority in connection with this Agreement or the Equipment or any amount due hereunder. Customer will reimburse Bigbelly (or pay directly to the applicable taxing authority if instructed in writing by Bigbelly) for all such Taxes, except to the extent Customer is tax-exempt and has delivered to Bigbelly a valid and current tax exemption certificate as reasonably determined by Bigbelly.

6.2 Service. Customer agrees that, during the Term, it shall keep in effect the Services. Unless otherwise agreed in a written amendment to this Agreement, Bigbelly or its subcontractors shall be the sole and exclusive suppliers of the Services.

6.3 Additions and Modifications of Equipment. Unless otherwise expressly agreed by an officer of Bigbelly in writing, Customer shall not make any additions, alterations or modifications to the Equipment. Customer shall not remove, cover or damage any Bigbelly logos or other identification markings on the Equipment. Bigbelly shall not be liable for any damage to Equipment caused by and of the following: all external causes such as (without limitation) dropping, accident, vandalism, collision, fire, immersion in water, or otherwise using the Equipment contrary to the instructions and warnings contained in the user materials issued by Bigbelly (the "User Materials"); altering or modifying the Equipment; deterioration of paint, trim, and appearance items that results from use and/or exposure to the elements; cleaning with a high-pressure water system, abrasives, or solvents; exposure to environmental conditions beyond the limits stated in the User Materials; failure to properly maintain or improperly servicing the Equipment; damage caused by use of non-Bigbelly parts or accessories; improper charging of the Bigbelly battery or batteries; or shipping with methods other than those recommended by Bigbelly. See the User Materials for proper use, maintenance, and charging of the Equipment.

6.4 Ownership Rights. The Equipment and Software contain intellectual property including but not limited to patented and unpatented inventions, trade secrets, know-how, and copyrights all of which rights are owned and will continue to be owned exclusively by Bigbelly and/or its licensors and Customer will obtain no rights thereto other than the limited rights of use under this Agreement. Customer acknowledges and agrees that all such intellectual property, including technology, materials, hardware, software, content and data of which the Equipment and Software is comprised, or which is otherwise contained within or attached to, generated, collected or processed by the Equipment and/or Software, is the sole and exclusive property of Bigbelly. Bigbelly hereby grants Customer a royalty-free, non-exclusive, fully paid up right and license to use the Equipment, the Software, and any intellectual property rights therein as necessary for Customer and its contractors to use the Equipment and Services consistent with the terms and conditions of this Agreement. Bigbelly reserves the right, at its sole cost and expense, and subject to applicable governmental guidelines, laws, rules, regulations and ordinances, at any time upon notice to Customer, to enhance or otherwise modify the Equipment and/or Software made available to Customer under this Agreement, including but not limited to enhancements or modifications for the purpose of implementing Wi-Fi network capability to the Equipment, instituting mechanisms for data collection, processing and analysis. Bigbelly retains all media rights associated with signage, and Customer agrees not to post signage and/or advertisements on the Equipment without written approval by Bigbelly. For avoidance of doubt, this does not prohibit customer from displaying messages solely on behalf of customer such as public service messages.

6.5 Termination

(A) Effect of Termination. Except as provided for in Section 6.7 below, any termination of the Agreement by Customer, with or without cause, shall not relieve Customer of its obligations to make any and all payments due under this Agreement, including Connect Services Fees.

(B) Post Termination Duties / Surrender of Equipment. Upon the expiration or earlier termination of the Term of the Connect Services for Equipment hereunder, or the termination of this Agreement, Bigbelly shall remove the Equipment as described in Section 4.1 (H) above.

6.6 Indemnifications by the Parties

(A) Indemnity by Bigbelly. Bigbelly shall indemnify, defend, and hold Customer and its directors, officers and employees, harmless, and defend Customer and its representatives if it requests, as to all third party claims, liabilities, losses, damages and expenses (including reasonable attorneys' fees and other legal expenses and amounts paid in settlements) brought against Customer or its representatives because of (a) any breach or alleged breach by Bigbelly of any of its warranties to, or agreements with, Customer, (b) any claim that any of the Equipment, Software, or Services infringes any third party patent, trademark, copyright or other intellectual property right, anywhere in the world, or (c) any death, injury or damage to any person or property caused by Bigbelly's negligent performance of the Services. In no event will Bigbelly be liable for or indemnify Customer against any damage, claim or injury arising out of Customer's or any third party's actions, including but not limited to accidental or intentional tampering with the Equipment. Notwithstanding the foregoine, however, Bigbelly's maximum liability with respect to subsection (b) herein shall be limited to twice (2X) the amount of fees paid by Customer with respect to the infringing Equipment, Software, or Services.

(B) Indemnity by Customer. Customer shall indemnify and hold Bigbelly and each of their directors, officers and employees, harmless, and defend Bigbelly and its representatives if it requests, as to all third party claims, liabilities, losses, damages and expenses (including without limitation, reasonable attorneys' fees and other legal expenses and amounts paid in settlements) brought against Bigbelly and/or its representatives because of (a) any breach or alleged breach by Customer of any of its representations, warranties, or agreements with Bigbelly, (b) any claim that any of the information provided by Customer to Bigbelly infringes any patent, trademark, copyright or other intellectual property right, anywhere in the world, or (c) any death, injury or damage to any person or property caused by or resulting from Customer's negligence in operating or securing the Equipment.

(C) Survival of Indemnity. The rights and obligations of Customer and Bigbelly under this Section 6.6 survive the expiration or termination of this Agreement.

6.7 Default; Dispute Settlement; Governing Law

(A) Definition of Default. The term "Default" means any of the following events: (i) Customer fails to make any payment required under this Agreement within ten (10) days after the same shall have become due; (ii) Customer or Bigbelly fails to perform any other obligation under this Agreement and such non-performance is not cured within thirty (30) days following notice; (iii) Customer fails to provide insurance as required under this Agreement; (iv) Customer defaults under this Agreement or any other agreement with Bigbelly; (v) Customer or Bigbelly becomes insolvent or makes an assignment for the benefit of its creditors; (vi) a receiver, trustee, conservator or liquidator of Customer or Bigbelly of all or a substantial part of such Party's assets is appointed with or without the application or consent of such Party; (vii) a petition is filed by or against Customer or Bigbelly under any bankruptcy, insolvency or similar law; (viii) any warranty or representation made by either Party herein proves to have been false or misleading when made; or, (ix) there is a material adverse change in Customer's financial condition.

(B) Default by Customer. Upon the occurrence of a Default by Customer, Bigbelly may do one or more of the following as Bigbelly in its sole discretion shall elect: (i) initiate Dispute Settlement procedures pursuant to subsection (D) herein to enforce performance by Customer of this Agreement or to recover damages for the breach thereof; (ii) cause Customer, at its expense, to promptly return the Equipment to Bigbelly at such place as Bigbelly designates in writing; (iii) by notice in writing to Customer, cancel or terminate this Agreement, without prejudice to any other remedies hereunder; (iv) enter upon, or instruct its agents or assigns to enter upon, the premises of Customer or other premises where any Equipment may be located and take possession of and remove all or any portion of such Equipment without liability to Customer by reason of such entry or taking possession; (v) require Customer to pay to Bigbelly immediately upon demand, in addition to all amounts then due under this Agreement, as liquidated damages, an amount equal to the greater of (A) eighty percent (80%) of the remaining Services fees to become due during the then-unexpired portion of the Term or (B) the total Services fees applicable to the year prior to such Default, which amount, owing to the acknowledged difficulty in establishing a value for the unexpired Initial Term, the parties agree represents an agreed upon reasonable measure of damages and is not to be deemed a forfeiture or penalty; (vi) charge Customer interest on all monies due Bigbelly at the rate of eighteen percent (18%) per year from the date of default until paid, but in no event more than the maximum rate permitted by applicable law; (vii) collect from Customer all expenses incurred by Bigbelly in connection with the enforcement of any such remedies, including all expenses of repossessing, storing, shipping, repairing and selling the Equipment and reasonable attorneys' fees; and (viii) exercise any other right or remedy available to Bigbelly under applicable law.

(C) Default by Bigbelly. Upon the occurrence of a Bigbelly Default, Customer may do one or more of the following as Customer in its sole discretion shall elect: (i) initiate Dispute Settlement procedures pursuant to subsection (D) herein to enforce performance of the Agreement or recover damages for the breach thereof; (ii) cause

Bigbelly, at its expense, to promptly collect the Equipment; (iii) by notice in writing to Bigbelly, cancel or terminate the Agreement, without prejudice to any other remedies hereunder; (iv) collect from Bigbelly all expenses incurred by Customer in connection with the enforcement of any remedies, including all expenses of repossessing, storing, shipping, repairing and selling the Equipment and reasonable attorneys' fees; and (v) exercise any other right or remedy available to Customer under applicable law.

(D) Dispute Settlement. In the event of any dispute arising due to a Default or with respect to the terms of this Agreement or the obligations of the Parties, the Parties agree to discuss the dispute in an attempt to amicably resolve such dispute within thirty (30) days of the date of a written notice of such dispute by one party to the other. Failing any such resolution, either Party will be free to seek remedy through a court of competent jurisdiction.

(E) Continuation of Obligations. The occurrence of a dispute under or relating to this Agreement shall not relieve Customer of its obligations to make any and all payments described in this Agreement, including the Connect Services Fees.

(F) Governing Law. The Agreement including the Attachments shall be interpreted under the laws of the courts of the Commonwealth of Massachusetts, without regard to principles of conflicts of law or the United Nations Convention on the International Sale of Goods. Each party consents to the personal jurisdiction of federal and state courts located in Boston, Massachusetts. Customer agrees that service of process in any action or proceeding may be duly affected upon Customer by mailing such process via certified mail, return receipt requested or as otherwise provided under applicable law.

6.8 Assignment. Customer may not assign this Agreement or any rights hereunder, or sublease or lend any Equipment without the prior written consent of Bigbelly. No assignment or sublease shall relieve Customer of its obligations hereunder and Customer shall remain primarily liable for such obligations. Any sale, assignment, transfer, encumbrance, delegation, or sublease by Customer not consented to by Bigbelly shall be void ab initio. Bigbelly may at any time assign to any person (an "Assignee") any interest in this Agreement in part or in whole or grant security interests in the Equipment and/or the Bigbelly's rights hereunder. In such event, all the provisions of this Agreement for the benefit of Bigbelly shall inure to the benefit of and be exercised by or on behalf of such Assignee, but the Assignee shall not be liable for or be required to perform any of Bigbelly's obligations to Customer and Bigbelly shall retain such obligations. Customer acknowledges that any such assignment shall not materially change Customer's duties or obligations hereunder. Subject to the foregoing, the Agreement shall inure to the benefit of, and be binding upon, the successors and permitted assigns of the parties hereto.

6.9 Relationship of Parties. Bigbelly and Customer are each independent entities and the relationship between Bigbelly and Customer under the Agreement is not a joint venture, partnership, principal-agent, broker, sales representative or franchise relationship. Bigbelly has no authority to make any promise, commitment or agreement on Customer's behalf, and Bigbelly will not represent to anyone that it does have such authority.

6.10 Notices. Each notice provided for in the Agreement shall be given in writing and become effective when:

(A) Served by personal delivery to the recipient's Legal Department or Contract Administrator;

Customer: VILLAGE OF NORTHBROOK	BIG BELLY SOLAR, LLC:
Name: STEVE FRITZ	Brian Phillips
Title: ASSISTANT PUBLIC WORKS DIRECTOR	CEO
Address: 1655 HUEHL RD	150 A Street, #103
NORTHBROOK IL 60062	Needham, MA 02494

(B) Deposited, postage prepaid in the United States registered or certified mails addressed to the recipient's Legal Department or Contract Administrator;

(C) Dispatched to the recipient's Legal Department or Contract Administrator via overnight mail using UPS, Federal Express or similar carrier; or

(D) Sent to recipient's Legal Department or Contract Administrator via facsimile or other electronic means if delivery does not require a signature or other confirmation of delivery.

6.11 Force Majeure. Any delay or failure of either party to perform its obligations (other than payment obligations) shall be excused if it is caused by an extraordinary event or occurrence beyond the control of the nonperforming party and without the nonperforming party's fault or negligence, such as acts of God; fires, floods, windstorms; explosions; natural disasters; wars and sabotage; plague, epidemic, pandemic, outbreaks of infectious disease or any other public health crisis, including quarantine or other employee restrictions. Raw material or labor shortages are not force

majeure events. Each party shall promptly notify the other of the reason for the delay and use its best efforts in curing such cause and shall take all action practicable to minimize the adverse impact of the delay on the other party.

6.12 No Warranties. Customer hereby acknowledges that it has not entered into this Agreement in reliance upon any warranty or representation by any person or entity except for the warranties or representations specifically set forth herein.

6.13 Use of Trade Names and Trademarks. Neither Party may use the trade name, service mark, logo or trademark of the other Party for any purpose without previous permission in writing from the other Party.

6.14 Damages and Limitation of Liability. Unless otherwise provided in this Agreement, in no event shall either party, or its affiliates, shareholders, officers, directors, employees, agents, or representatives, or assigns be liable for lost revenue, lost profits, incidental, indirect or consequential damages, resulting from any aspect of the Service provided in connection with this Agreement. Bigbelly's maximum aggregate liability to Customer in relation to or in connection with this Agreement will be limited to the total amount paid by Customer to Bigbelly under this Agreement.

6.15 Injunctive Relief. If there is a breach or threat of a breach of the terms of this Agreement, the Parties agree that compensation alone would not be an adequate remedy for the harm suffered by the non-breaching Party, which harm would be immediate and irreparable. Therefore, if there is a breach or threatened breach, then the non-breaching Party shall be entitled to seek injunctive relief to stop the breach or threatened breach. The rights and obligations of the Parties under this provision shall survive the termination, cancellation, or expiration of this Agreement.

6.16 Representations. This Section 6.16 is not applicable if Customer is a governmental entity, agency or authority. Customer hereby represents, warrants and covenants to Bigbelly that: (a) Customer is organized and validly existing under the laws of the jurisdiction of its organization, with adequate power and capacity to enter into this Agreement and any other documents, instrument or agreement related to this Agreement; (b) this Agreement has been duly authorized, executed and delivered by Customer and constitutes a valid, legal and binding agreement, enforceable in accordance with its terms, except to the extent that the enforcement of remedies therein provided may be limited under applicable bankruptcy and insolvency laws; (c) no approval, consent or withholding of objections is required from any governmental authority or instrumentality with respect to the entry into or performance by Customer of this Agreement, except such as have already been obtained; and (d) there are no suits or proceedings pending or threatened in court or before any regulatory commission, board or other administrative governmental agency against or affecting Customer, which will have a material adverse effect on the ability of Customer to fulfill its obligations and liabilities under this Agreement.

6.17 Fiscal Funding. This Section 6.17 is effective only if Customer is a governmental entity, agency or authority. Customer hereby represents and warrants to Bigbelly that: (a) Customer is a State, possession of the United States, the District of Columbia, or political subdivision thereof as defined in Section 103 of the Internal Revenue Code and Treasury Regulations and Rulings related thereto (the "Code"); (b) if Customer is incorporated, it is duly organized and existing under the Constitution and laws of its jurisdiction of incorporation and will do or cause to be done all things necessary to preserve and keep such organization and existence in full force and effect; (c) Customer has been duly authorized by the Constitution and laws of the applicable jurisdiction and by a resolution of its governing body (which resolution, if requested by Bigbelly, is attached hereto), to execute and deliver this Agreement and to carry out its obligations hereunder; (d) all legal requirements have been met, and procedures have been followed, including public bidding, in order to ensure the enforceability of this Agreement; (e) the Equipment will be used by Customer only for essential governmental or proprietary functions of Customer consistent with the scope of Customer's authority and will not be used in a trade or business of any person or entity, by the federal government or for any personal, family or household use; (f) Customer's need for the Equipment is not expected to diminish during the Term of this Agreement; (g) Customer has funds available to pay contracted Services Fees and other payments owing hereunder until the end of its current appropriation period, and Customer intends to request funds to make contracted payments in each appropriation period, from now until the end of the Term of this Agreement; and (h) the Customer shall comply at all times with all applicable requirements of the Code. If sufficient funds are not appropriated to make such contracted payments under this Agreement, this Agreement shall terminate and Customer shall not be obligated to make such payments beyond the then-current fiscal year for which funds have been appropriated. Upon such an event, Customer shall, no later than the end of the fiscal year for which such contracted payments have been appropriated, deliver possession of the Equipment to Bigbelly. If Customer fails to deliver possession of the Equipment to Bigbelly, the termination shall nevertheless be effective but Customer shall be responsible for the payment of damages in an amount equal to the portion of such contracted payments thereafter coming due that is attributable to the number of days after the termination during which the Customer fails to deliver possession and for any other loss suffered by Bigbelly as a result of Customer's failure to deliver possession as herein required. Customer shall notify Bigbelly in writing within seven (7) days after the failure of the Customer to appropriate funds sufficient for the payment of such contracted payments, but failure to provide such notice shall not operate to extend the Agreement term or result in any liability to Customer.

6.18 Entire Agreement. This Agreement constitutes the entire agreement between the Parties regarding its subject matter and supersedes all prior agreements, oral and written, negotiations, commitments and writings, and may not be released, discharged, abandoned, changed or modified in any manner, orally or otherwise, except by an instrument in writing signed by a duly authorized representative of each Party. Any purchase order or other ordering document issued by Customer is for administrative purposes only and does not form part of this Agreement. If an inconsistency exists between or among the documents listed below, then the following order of precedence shall govern:

(a) The Connect Services Schedule, above; then

(b) The Connect Services Agreement, above; then

(c) These Connect Services Terms and Conditions.

6.19 Amendment; Modification; Waiver. No modification, amendment, waiver or release of any provision of this Agreement or any right, obligation, claim or cause of action arising under this Agreement shall be valid or binding unless in writing and duly executed by the Party against whom enforcement is sought. No waiver by either Party of any breach, or the failure of either Party to enforce any of the terms and conditions of this Agreement, shall affect, limit or waive that Party's right to enforce and compel compliance with all terms and conditions of this Agreement or to terminate this Agreement as permitted by its terms. Any provision of this Agreement which for any reason may be held unenforceable in any one jurisdiction shall, as to such jurisdiction, be ineffective to the extent of such unenforceability without invalidating the remaining provisions of this Agreement, and any such unenforceability in any one jurisdiction shall not render such provision unenforceable in any other jurisdiction. This Agreement may be executed in any number of counterparts, each of which, when so executed and delivered, shall be an original, but all such counterparts shall together consist of but one and the same instrument.

End of Attachment A.

ATTACHMENT B

PREAUTHORIZATION PAYMENT FORM – AUTOMATED BANK DEBIT

I authorize Big Belly Solar, LLC or its assignee ("Payee") to initiate debit entries from our checking account from the financial institution listed below.
If any of the below information changes, I will promptly complete a new authorization agreement. Payee will retain this document on file

Company Name: _____

Address: _____

City: _____ State: _____ Zip Code: _____

Phone: _____ Fax: _____

Representative: _____ Title: _____

Account Information – ☐ Business Checking Account ☐ Personal Checking Account

Financial Institution Name: _____

City: _____ State: _____ Zip: _____

I authorize Payee to withdraw:

☐ Reoccurring Flat Amount of $ Or ☐ _____

☐ Variable Amount _____

☐ Monthly ☐ Weekly ☐ Other: _____

ABA Bank Routing Number (must be 9 numbers) Account Number (not to exceed 15 numbers)

(Enter the above information from the bottom of your check, do not include the check number)

In order to sign up you must attach a voided copy of your check. Deposit slips are not accepted. For security reasons we recommend that the check is Voided

Staple Voided Check Here

This authority is to remain in full force and effect until Payee has received written notification from me within 30 days of its termination in such time and in such manner as to afford Payee a reasonable opportunity to act on it.

X _____ _____

Signature of Authorized Check Signer Date

_____ _____

Print First, Middle Initial and Last Name Title

BILLING INFORMATION FORM

PLEASE COMPLETE THIS FORM AND RETURN WITH DOCUMENTS

In order for Big Belly Solar, LLC to properly bill and credit your account, it is necessary that you complete this form and return it with the signed documents.

Billing Name: _____

If you would like your invoices emailed to you in place of regular mail, please provide an email address(es) below:

_____

_____

Billing Address: _____

_____

Attention: _____

Telephone Number: _____

Federal ID#: _____

SPECIAL INSTRUCTIONS

Do you require a Purchase Order Number on the invoice? ☐ Yes ☐ No

If yes, please provide the PO# _____ and attach a copy of the purchase order (front & back) for our file.

Is a new purchase order required for each new fiscal year period? ☐ Yes ☐ No

If yes, provide month/year PO expires _____

Do you have multiple contracts, and would you like them all billed on one invoice (Summary Billing)? ☐ Yes ☐ No

Are you sales tax exempt? **If yes, please attach a copy of exempt certificate or direct pay permit.** ☐ Yes ☐ No

Do you require any special information to establish a vendor number for _____? ☐ Yes ☐ No

If yes, please advise: _____

Additional Comments: _____

_____

High Capacity Station (HC5)

Bigbelly's HC5 is a smart, solar-powered, compacting waste or recycling station. This compacting model holds 5-10X real capacity over an average traditional waste bin. It is equipped with sensors that monitor and report fullness levels and collection activity. It harvests solar power to compact waste and communicate its real-time status. The HC5's enclosed hopper (opening) design ensures total waste containment. This model maintains the durable, high quality and design integrity of all Bigbelly smart stations, and can be customized based on waste stream, options, and accessories.



Technical Specifications

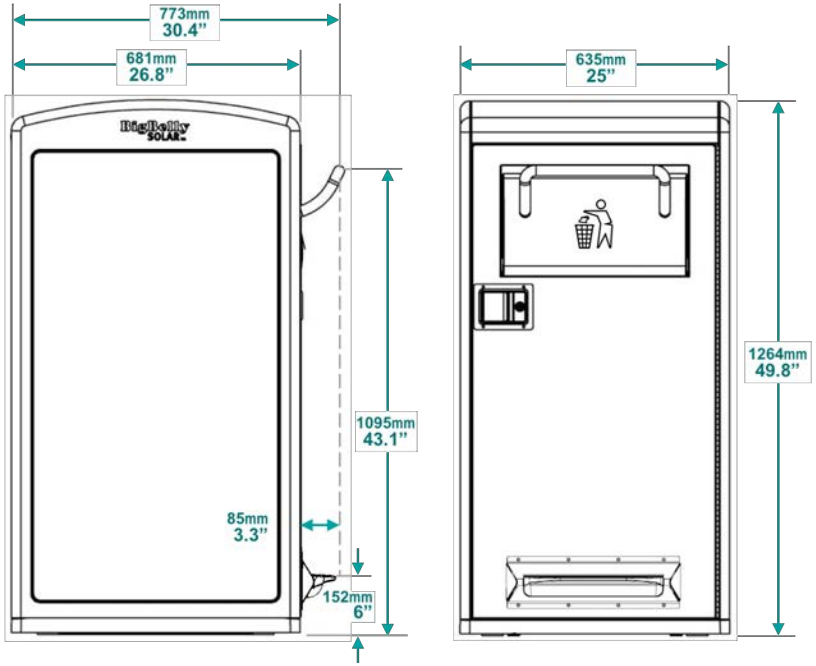

Overall Machine Dimensions

- Height: 49.8" (1264 mm)
- Width: 25" (635 mm)
- Depth: 26.8" (681 mm)
- Handle Height (ADA Compliant): 43.1" (1095 mm)
- Weight: 270 lbs (122 kg)
- Shipping weight: 300 lbs (136.08 kg)
- Hopper Opening: 6" x 17" (152 mm x 432 mm)
- Bin Volume: 33 gallons (125 L) compacted trash; approx.150 gallons (568 L) uncompacted trash.
- Bin Dimension: 24" x 20.4" x 21.65" (609 mm x 518 mm x 549 mm)

Waste Streams: Mixed Waste Trash, Single Stream Recycling, or Compost (with appropriate markings).

Options: Diagram to left shown with Foot Pedal. See options and accessories on next page.

High Capacity Station (HC5)

Smart, Solar-Powered, Compacting Model (150 Gal / 570 L)



Bigbelly
SMART SOLUTIONS FOR CITIES

www.bigbelly.com | info@bigbelly.com
+1-781-444-6002 | © 2019 Bigbelly, Inc.

Product specifications subject to change without notice.

High Capacity Station (HC5)

Smart, Solar-Powered, Compacting Model (150 Gal / 570 L)



Bigbelly
SMART SOLUTIONS FOR CITIES

www.bigbelly.com | info@bigbelly.com
+1-781-444-6002 | © 2018 Bigbelly, Inc.

Product specifications subject to change without notice.

Technical Specifications - Continued

HC5 Features

- Unique built-in compaction technology with up to 5-to-1 compaction ratio
- Fully automated, microprocessor controlled system senses fullness and machine status
- Embedded sensors read and report fullness levels, collection activity into integrated software platform
- Ideal waste flow with 70^0 hopper dump angle and significant compaction penetration (travels to 9" from bottom of bin)
- Hopper Sensor alerts when hopper is jammed open & logs a count of hopper openings in CLEAN
- LED status lamps indicate readiness to collect (fullness level or age of waste), machine status and error codes
- 4G LTE wireless data link for remote monitoring and management
- GPS assisted location service

Safety Features

- CE approved
- Double fault-tolerant design for hopper insertion door prevents access to compaction area;
- Physical barrier between users and moving compactor
- Fully interlocked access doors protect users and service personnel; Separately keyed service access
- Locked front trash removal door
- Dampened hopper opening with use of foot pedal
- No pinch points, sharp edges or corners

Durability

- Weather resistant, UV stabilized polyester powder-coat finish on all exterior parts
- Electronic components temperature range of -40ºF to +185ºF (-40ºC to +85ºC)
- Fully weatherized, but in the event of a flood, HC5 can withstand:
  - Up to 20” (508 mm) of water without harming the electronics
  - Up to 36” (915 mm) of water with only minor damage to electronics

Opening (Hopper) Options



Black / Trash *Blue / Recycle* *Green / Compost*

PLEASE NOTE: Green Hoppers require additional 6 weeks to process.

Materials

- RoHS compliant
- Galvanized sheet metal steel interior and exterior construction
- Heavy duty plastic side panels for dent and scratch resistance (recycled content)
- Interior Bin: Leak proof; made of low density polyethylene (LDPE) plastic

Power & Electronics

- Patented Skip-a-Cycle™ energy management technology ensures performance in any location, including shade and cloud cover; Average operation uses less than 3wh energy per day
- 28Ah Extended Life Battery with Insulation for Optimized Performance (average: 5-8 years)
- Polycrystalline silicon cell PV module (22 watts)
  - 40 watts HE (high energy) upgrade available
- PV panel protected by polycarbonate bubble
- Spill-proof, sealed maintenance-free battery
- Self-powered unit requires no wiring

Options & Accessories

- Foot Pedal for Hands-Free Use
- Wheeled Interior Lift Bin (Bar & Comb Styles)
- Graphic Wraps, Message Panels, Stickers
- Ashtray and Stub-out Plates
- Security System with Physical Plates
- External A/C Adapter for Indoor Use
- Standalone Wi-Fi Hotspot Upgrade Option

Standard Capacity Station (SC5.5)

Bigbelly's SC5.5 is a smart, fullness-sensing waste station that is anything but standard. This non-compacting model holds 2-3X real capacity of a traditional bin, and is equipped with sensors that monitor and report fullness levels and collection activity. It is battery powered to communicate its real-time status. The SC5.5 has an enclosed hopper option for total waste containment. This model maintains the durable, high quality and design integrity of all Bigbelly smart stations, and can be customized based on waste stream, options, and accessories.



Technical Specifications

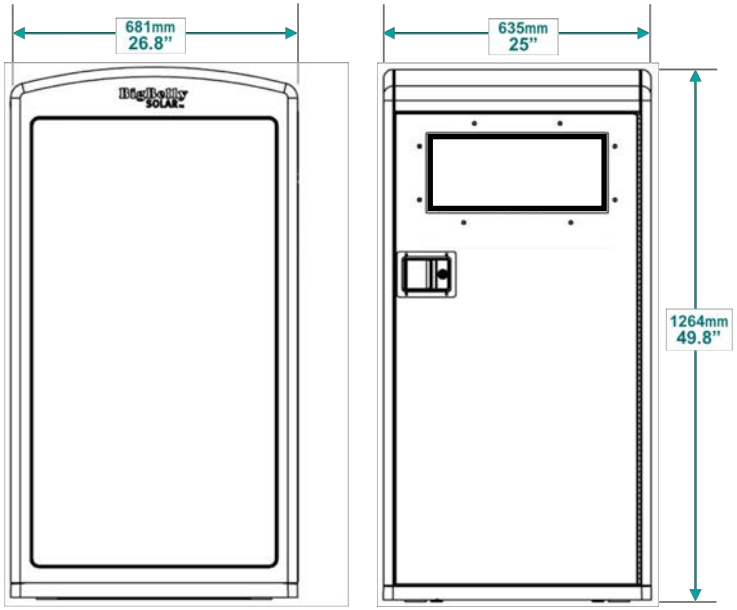

Overall Machine Dimensions

- Height: 49.8" (1264 mm)
- Width: 25" (635 mm)
- Depth: 26.8" (681 mm)
- Handle Height (ADA Compliant): 43.1" (1095 mm)
- Weight: 150 lbs (68 kg)
- Shipping weight: 180 lbs (82 kg)
- Insertion Opening: Can be configured for variety of recycling / waste streams.
- Bin Volume: 50 gallons (189 L)
- Bin Dimension: 25" x 20" x 32.25" (635 mm x 508 mm x 819 mm)

Waste Streams: Mixed Waste Trash, Single Stream / Paper / Bottles & Cans Recycling, or Compost / Organics (with appropriate markings).

Options: See options and accessories on next page.

Standard Capacity Station (SC5.5)

Smart, Battery-Powered, Non-Compacting Model (50 Gal / 190 L)



Bigbelly
SMART SOLUTIONS FOR CITIES

www.bigbelly.com | info@bigbelly.com
+1-781-444-6002 | © 2018 Bigbelly, Inc.

Product specifications subject to change without notice.

Standard Capacity Station (SC5.5)

Smart, Battery-Powered, Non-Compacting Model (50 Gal / 190 L)



Bigbelly
SMART SOLUTIONS FOR CITIES

www.bigbelly.com | info@bigbelly.com
+1-781-444-6002 | © 2018 Bigbelly, Inc.

Product specifications subject to change without notice.

Technical Specifications - Continued

SC5.5 Features

- Fully automated, microprocessor controlled system senses fullness and machine status
- Embedded sensors read and report fullness levels, collection activity into integrated software platform
- Patent-pending 'SC Sleeve' ensures data accuracy and prevents false fullness readings due to bag interference
- LED status lamps indicate readiness to collect (fullness level or age of waste), machine status and error codes
- 4G LTE wireless data link for remote monitoring and management
- GPS assisted location service
- With Enclosed Option, Hopper Sensor alerts when hopper is jammed open & logs a count of hopper openings in CLEAN
- 'Companion' model is also available to couple with either an HC5 or SC5.5 'Hub'
  - Note: Companion models use the power and communication source of their attached hub

Safety Features

- CE approved
- Locked front door accessed via key by collection and service personnel
- Dampened hopper opening with use of foot pedal
- No pinch points, sharp edges or corners

Durability

- Weather resistant, UV stabilized polyester powder-coat finish on all exterior metal parts
- Electronic components temperature range of -40ºF to +185ºF (-40ºC to +85ºC)
- Fully weatherized, but in the event of a flood, the component can withstand up to 40" (1.06 m) of water without harming electronics

Opening Options

Enclosed Hopper



Landfill Waste | Recycling | Compost

Open Faceplate



Landfill Waste | Single Stream Recycling | Paper Recycling | Bottle & Cans Recycling

Materials

- RoHS compliant
- Galvanized sheet metal steel interior and exterior construction
- Heavy duty plastic side panels and top for dent and scratch resistance (recycled content)
- Interior Bin: Leak proof; made of low density polyethylene (LDPE) plastic

Power & Electronics

- Single-use Alkaline battery pack
- Battery life: Up to 8 years
- Self-powered unit requires no wiring
- Cordless operation for both indoor / outdoor use

Options & Accessories

- Wheeled Interior Lift Bin (Bar & Comb Styles)
- Enclosed Hopper Opening
- Foot Pedal for Hands-free Use (with Hopper)
- Graphic Wraps, Message Panels, Stickers
- Security System with Physical Plates

Multi-Stream Configurations

Stations are modular and support any combination of waste streams at each location as **Single, Double, and Triple** station configurations. A fleet may be comprised of a variety of stations in order to meet the unique needs of each area. Customize each station by selecting components' **capacity** (HC5 or SC5.5) and **waste stream** (Trash, Single Stream / Paper / Bottles & Cans Recycling, or Compost/Organics; see next page for available streams per model).

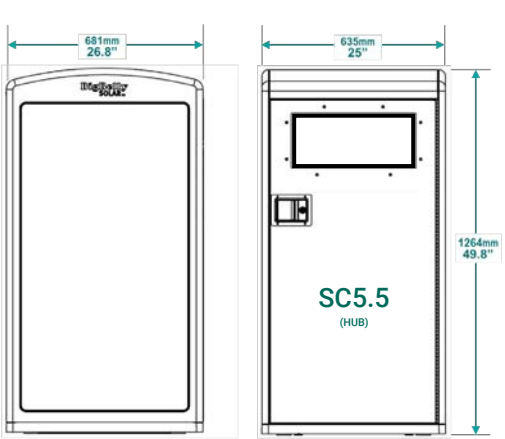

SC5.5 Single Station
Approximately 150 lbs (68kg)

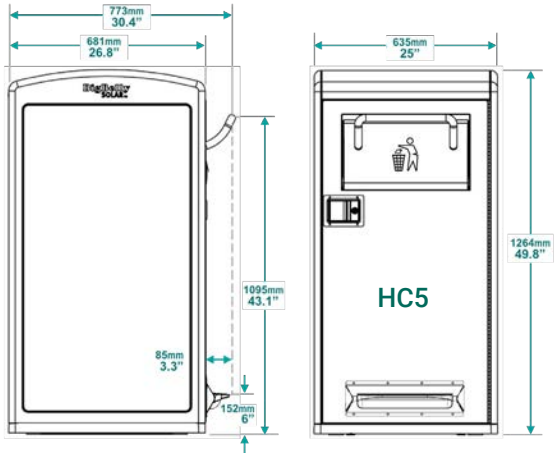

HC5 Single Station
Approximately 270 lbs (122 kg)

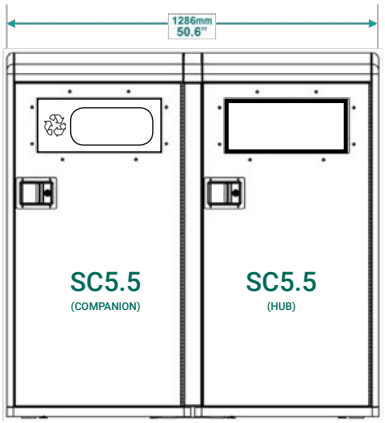

SC5.5/SC5.5 Double Station
Approximately 294 lbs (133 kg)

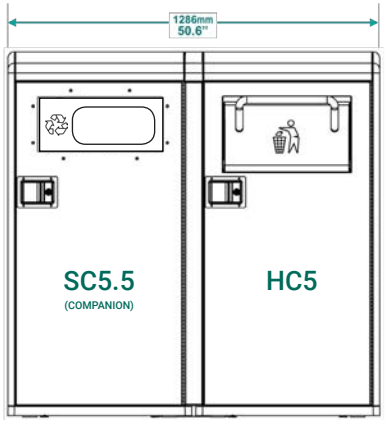

HC5/SC5.5 Double Station
Approximately 414 lbs (188 kg)

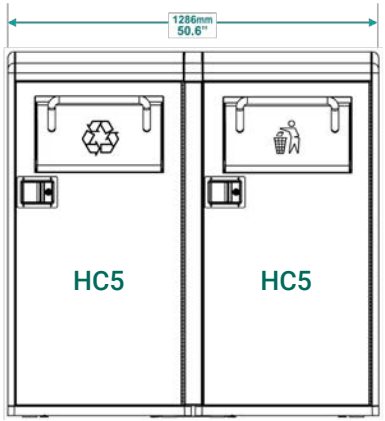

HC5/HC5 Double Station
Approximately 540 lbs (245 kg)

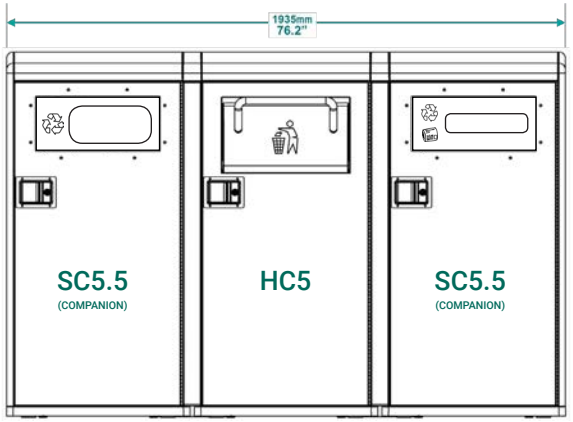

HC5/SC5.5/SC5.5 Triple Station
Approximately 558 lbs (253 kg)

Multi-Stream Configurations

Mix & Match for Station Capacity and Waste Stream



Bigbelly
SMART SOLUTIONS FOR CITIES

www.bigbelly.com | info@bigbelly.com
+1-781-444-6002 | © 2018 Bigbelly, Inc.

Product specifications subject to change without notice.

Multi-Stream Configurations

Mix & Match for Station Capacity and Waste Stream





Bigbelly
SMART SOLUTIONS FOR CITIES

www.bigbelly.com | info@bigbelly.com
+1-781-444-6002 | © 2018 Bigbelly, Inc.

Technical Specifications

Overall Dimensions	High Capacity Station (HC5) *Smart, Solar-Powered, Compacting Model*	Standard Capacity Station (SC5.5) Hub *Smart, Self-Powered, Non-Compacting Model*	Standard Capacity Station (SC5.5) Companion *Smart, Self-Powered, Non-Compacting Model*
Height	49.8" (1264 mm)	49.8" (1264 mm)	49.8" (1264 mm)
Width	25" (635 mm)	25" (635 mm)	25.6" (635 mm)
Depth	26.8" (681 mm)	26.8" (681 mm)	26.8" (681 mm)
Handle Height	43.1" (1095 mm)	With Hopper: 43.1" (1095 mm)	With Hopper: 43.1" (1095 mm)
Weight	270 lb (122 kg)	150 lb (68 kg)	144 lb (65 kg)
Shipping Weight	300 lb (136 kg)	180 lb (82 kg)	176 lb (80 kg)
Battery Voltage	12V	4.5V	-
Insertion Opening	6" x 17" (15.2 cm x 43.2 cm)	Can be configured for multiple recycling or waste streams.	Can be configured for multiple recycling or waste streams.
Bin Volume	33 gallons (125 L) compacted; 150 gallons uncompacted	50 gallons (189 L)	50 gallons (189 L)
Liner Bags	Custom High Capacity Liner Bags (#BBS-CB4647 or #BBS-RCB4647) are available for purchase. *The black or clear bags are 47"H x 46"W (120cm x 117cm) and 2.5mil (64µ) thick.*	Custom Standard Capacity Liner Bags (#BBS-RB4255) are available for purchase. *The clear bags are 55"H x 42.5"W (140cm x 108cm) and 1.25mil (32µ) thick.*	Custom Standard Capacity Liner Bags (#BBS-RB4255) are available for purchase. *The clear bags are 55"H x 42.5"W (140cm x 108cm) and 1.25mil (32µ) thick.*

Liner Bags are available from Bigbelly's official provider, WasteZero. Contact WasteZero to order liner bags at +1.800.866.3954 or www.WasteZero.com/Bigbelly/.

Opening Options

Enclosed Hopper (HC5, SC5.5)



Landfill Waste | Recycling | Compost

Open Faceplate (SC5.5)



Landfill Waste | Single Stream Recycling | Paper Recycling | Bottle & Cans Recycling

PLEASE NOTE: Green Hoppers require additional 6 weeks to process.

Product specifications subject to change without notice.

MEMORANDUM

To: Village Manager Cara Pavlicek
From: Fire Chief David Schweihs
Date: 2026-07-14
Subject: A Resolution Waiving Competitive Bidding and Authorizing the Purchase of the E-Lock and MedVault System from Knox Company

Overview
Knox Company provides the E-Lock System and MedVault System use by the Village's Fire Department to work in unison to provide additional safeguards regarding access to buildings and controlled substances.

Fiscal Impact
The adopted FY27 Budget provides funding in account number 11-3100-705-00 for the purchase of the Knox E-Lock and Knox MedVault System in an amount not to exceed $378,300 including a contingency of $18,128.

Recommendation
Approval.

Strategic Priority

Public and Community Safety. Provide public and community safety through education, prevention, and aligning resources with community needs.

Background

The Fire Department utilizes a master key entry system, provided by Knox Company, to provide emergency access to some structures/buildings throughout the Village and Rural Fire Protection District. The current system used provides a traditional physical master key to open a small vault on-site which stores keys for building access. This system has proven to be a reliable tool for many years; however, the use of a traditional mechanical master key limits the ability to track usage, manage user access, and ensure real-time accountability. Additionally, the Fire Department carries medications on fire apparatus and ambulances, including controlled substances and narcotics, which are currently stored in unsecured medication kits. In February, the Drug Enforcement Administration (DEA) published the final rule implementing the *Protecting Patient Access to Emergency Medications Act of 2017* (PPAEMA), which

became effective on March 9, 2026 and updates Federal requirements governing how Emergency Medical Services (EMS) agencies store, secure, transport, and account for controlled substances used in emergency medical care. For fire-based EMS agencies, this rule mandates Federal standards for the secure storage, transport, accountability, and administration of controlled substances used during emergency medical response.

Knox Company provides an updated solution for both limitations currently identified. The Knox E-Lock System and MedVault System work in unison to provide additional safeguards regarding access to buildings and controlled substances. Although the MedVault System was not included within the FY27 fire department budget request, based on compliance with the new DEA rule and updated pricing for the Knox E-Lock System, the MedVault System is necessary and is able to be purchased within the approved budget for the project.

The E-Lock System uses an electronic master key instead of a physical key to access the same vaults already being used to store building keys. This restricts access only to authorized personnel through electronic authentication. Unlike traditional master key systems, access permissions can be managed, updated, or revoked in real-time. A lost or compromised master key can simply be deactivated, rendering it unusable. The system also maintains a comprehensive audit trail, recording each access. In addition, the Knox E-Lock System modernizes public safety technology and offers compatibility with mutual-aid departments. The same electronic master keys used in the E-Lock System also provide access to Knox MedVaults that have the same user tracking and safeguards provided in the E-Lock System.

To address the limitations of current master key access and ensure compliance with federal EMS controlled substance requirements, Fire Department staff recommend the purchase of the Knox E-Lock System and associated MedVaults in the not-to-exceed amount of $378,300.

This project was approved in the Village’s Capital Improvement Plan (CIP) for FY27, and adequate funds for this purchase have been appropriated in the FY27 budget under account number 11-3100-705. Fire Department staff will be available at the July 14, 2026 Village Board meeting to address any questions if needed.

A Resolution Waiving Competitive Bidding and Authorizing the Purchase of the E-Lock and MedVault System from Knox CompanyÂ
Exhibit A - Knox E-Lock Quote - KnoxBox Key Replacement
Exhibit B - Knox MedVault Quote - KnoxBox Key Replacement
Exhibit C - Knox Sole Source - KnoxBox Key Replacement

Resolution 2026-R-

BE IT RESOLVED by the President and Board of Trustees of the Village of Northbrook, County of Cook and State of Illinois, THAT:

A Resolution Waiving Competitive Bidding and Authorizing the Purchase of the E-Lock System and the MedVault from Knox Company

is hereby adopted, as follows:

Section 1. RECITALS.

The Village's FY27 Capital Improvement Plan provides funding for the purchase of the Knox E-Lock System and the Knox MedVault system for the Village of Northbrook in account no. 11-3100—705.

The Fire Department currently utilizes Knox Company ("***Vendor***") master key entry system to provide emergency access to businesses, residences, and other occupancies throughout the Village and the Northbrook Rural Fire Protection District. The existing mechanical master key system presents limitations related to access tracking, user management, accountability, and security. In the event of a lost key, replacement of key cylinders throughout the Village and Northbrook Rural Fire Protection District would be costly, time-consuming, and could temporarily compromise building security.

The Fire Department also carries controlled substances and narcotics on fire apparatus and ambulances, which must comply with updated federal requirements established by the Drug Enforcement Administration (DEA) pursuant to the Protecting Patient Access to Emergency Medications Act (PPAEMA) of 2017, effective March 9, 2026.

Vendor's E-Lock System and MedVault System (collective the "***Systems***") provide enhanced electronic security, access accountability, audit tracking, and real-time access management for both building entry and controlled substance access. The Systems improve security, comply with DEA rules, reduce risk to the Village, and provide compatibility with mutual-aid departments.

The President and Board of Trustees have considered the purchase and determined that it is in the best interest of the Village and the public to approve the purchase of the Systems from the Vendor.

Section 2. WAIVER OF COMPETITIVE BIDDING REQUIREMENTS.

The requirement that competitive sealed bids be solicited for this purchase is hereby waived.

Section 3. AUTHORIZATION OF EXPENDITURES.

The Village Manager is authorized to make such payments to the Vendor and execute such documents as are necessary for the purchase of the E-Lock System and MedVault System in the not-to-exceed amount of $378,300.

Section 4. EFFECTIVE DATE.

This Resolution shall be effective after its passage and approval by a two-thirds majority of the members of the Board of Trustees.

Approved:

RESULT:
MOVER:
SECONDER:
AYES:
NAYES:
ABSTAIN:
ABSENT:

_____
Village President

ATTEST:

_____
Village Clerk

Knox Company
1601 W Deer Valley Rd
Phoenix AZ 85027
United States

Quote# QT-KA-75845

QUOTED TO:
CUS103038
VILLAGE OF NORTHBROOK
740 DUNDEE RD
NORTHBROOK IL 60062
UNITED STATES

SHIP TO:
VILLAGE OF NORTHBROOK
740 DUNDEE RD
NORTHBROOK IL 60062
UNITED STATES

Valid Through	Sales Rep	Terms	PO #	Shipping Method
10/28/2026	Larry Lulich	N30 - Net 30		FedEx 3Day® Freight

Item	Description	Quantity	Units	Rate	Amount
KLS-8800L	Knox eLock Core™, ELOCK CORE RETROFIT KIT	910	EA	$269.80	$245,518.00
Installation Address: Primary System Code Role: PS-98-0019-01-75-EKY01					
KLS-8701K	Knox eKey™, 8700 PROGRAMMABLE ELECTRONIC KEY, ASYMMETRIC	30	EA	$474.00	$14,220.00
Installation Address: Primary System Code Role: PS-98-0019-01-75-EKY01					
KS-6K2	KeySecure® 6, SUPPORTS 1 eKEY, 1 MSTR KEY	15	EA	$1,249.92	$18,748.80
Installation Address: Primary System Code Role: PS-98-0019-01-75-EKY01					
90034-KS5KS6	REPAIR TECH LOCK, KeySecure® 5/6	15	EA	$0.00	$0.00
Installation Address: Primary System Code Role: PS-98-0019-01-75-RTB01					
KD-1KD2	KeyDefender, Dual Key Assy	15	EA	$979.20	$14,688.00
Installation Address: Primary System Code Role: PS-98-0019-01-75-EKY01					
KLS-MB-60	MOUNTING BRACKET 60º ANGLE, KeySecure® 5 & 6	15	EA	$87.00	$1,305.00
Installation Address: Primary System Code Role: PS-98-0019-01-75-BOXES					
KD-MB-R5	KeyDefender Mounting Bracket, 5"	15	EA	$77.00	$1,155.00
Installation Address: Primary System Code Role: PS-98-0019-01-75-EKY01					
KLS-8600D	KnoxDock™, 8600 KEY PROGRAMMER & RECHARGER W/USB CABLE	2	EA	$109.50	$219.00

Knox Company
1601 W Deer Valley Rd
Phoenix AZ 85027
United States

Quote# QT-KA-75845

Item	Description	Quantity	Units	Rate	Amount
Installation Address: Primary System Code Role: PS-98-0019-01-75-EKY01					
SMS-9003C1	1YR. KnoxConnect™ Cloud License 21+ devices	1	EA	$2,749.00	$2,749.00
Installation Address: Primary System Code Role: PS-98-0019-01-75-EKY01					

Memo: Physical PO Required & Knox Connect Form

Subtotal	**$298,602.80**
Tax Amount	**$0.00**
Shipping and Handling	**$732.00**
Total	**$299,334.80**

TERMS AND CONDITIONS

All pricing is subject to change and is based on the stated quantity shipping all at one time. All shipping and handling fees, if provided, are estimates based on ground service to the “SHIP TO” address shown above. Knox will provide you a firm cost for shipping and handling fees when your order is placed. Knox provides detailed installation instructions with each Knox product. However, Knox is not responsible for actual installation.
After your order is shipped, items on the order can be returned to Knox for a refund, or credit, of the product price less a 25% restocking fee IF: 1) a request to return the product is received within 90 days of the order’s invoice date, 2) the product(s) are in new condition [have not been used, installed, or modified] and 3) the order’s invoice has been paid in full. Before shipping products or equipment for return or exchange, you must obtain a Return Authorization Number. Call 800-552-5669 for an Authorization number.

SALES TAX DISCLAIMER: Knox collects sales tax as mandated by local laws, based on an order’s delivery address, in all US and Canadian jurisdictions. If you are sales tax exempt, please provide a valid sales tax exemption certificate at the time the order is placed or quoted. Knox will charge sales tax if no sales tax exemption is received within 48 hours after the order is placed.

Please submit a purchase order form.

KNOX SOFTWARE CONNECT FORM REQUIRED WITH FIRST ORDER

By signing, you accept this Quotation and Terms, including the product configuration and payment terms indicated above.

_____

Signature / Date

Knox Company
1601 W Deer Valley Rd
Phoenix AZ 85027
United States

Quote# QT-KA-75968

QUOTED TO:
CUS103038
VILLAGE OF NORTHBROOK
740 DUNDEE RD
NORTHBROOK IL 60062
UNITED STATES

SHIP TO:
VILLAGE OF NORTHBROOK
740 DUNDEE RD
NORTHBROOK IL 60062
UNITED STATES

Valid Through	Sales Rep	Terms	PO #	Shipping Method
11/2/2026	Larry Lulich	N30 - Net 30		Ground Shipping < 75 LBS

Item	Description	Quantity	Units	Rate	Amount
KLS-5541-BCG	KnoxLock™ MedVault®, BADGE READER W/ CAPACITIVE KEYPAD, eKEY OVERRIDE, SURFACE	15	EA	$3,187.00	$47,805.00
Installation Address: Primary System Code Role: PS-98-0019-01-75-EKY01					
KLS-5801-BCG	KnoxLock™ StationVault, BADGE READER W/ CAPACITIVE KEYPAD, eKEY OVERRIDE	3	EA	$4,021.00	$12,063.00
Installation Address: Primary System Code Role: PS-98-0019-01-75-EKY01					
91204	MedVault® 2.75 AC ADAPTER	2	EA	$0.00	$0.00
Installation Address: Primary System Code Role: PS-98-0019-01-75-EMS01					

Memo: Need BadgeVault Reader Form & Physical PO for processing

Subtotal	**$59,868.00**
Tax Amount	**$0.00**
Shipping and Handling	**$969.00**
Total	**$60,837.00**

QT-KA-75968

TERMS AND CONDITIONS

All pricing is subject to change and is based on the stated quantity shipping all at one time. All shipping and handling fees, if provided, are estimates based on ground service to the “SHIP TO” address shown above. Knox will provide you a firm cost for shipping and handling fees when your order is placed. Knox provides detailed installation instructions with each Knox product. However, Knox is not responsible for actual installation.
After your order is shipped, items on the order can be returned to Knox for a refund, or credit, of the product price less a 25% restocking fee IF: 1) a request to return the product is received within 90 days of the order’s invoice date, 2) the product(s) are in new condition [have not been used, installed, or modified] and 3) the order’s invoice has been paid in full. Before shipping products or equipment for return or exchange, you must obtain a Return Authorization Number. Call 800-552-5669 for an Authorization number.

SALES TAX DISCLAIMER: Knox collects sales tax as mandated by local laws, based on an order’s delivery address, in all US and Canadian jurisdictions. If you are sales tax exempt, please provide a valid sales tax exemption certificate at the time the order is placed or quoted. Knox will charge sales tax if no sales tax exemption is received within 48 hours after the order is placed.

Please submit a purchase order form.

March 20, 2026

RE: NORTHBROOK FIRE DEPT
740 Dundee Rd
Northbrook IL 60062-2704

Patented manufactured single sole source letter. Key Retention for the apparatuses and the rapid entry system.

Since 2008, the following Jurisdiction (Northbrook Fire Department) has utilized a High Security Rapid Entry System / Program that is only manufactured by the Knox Company .
The Knox Company is the only existing manufacturer that produces the key-way system / eSystem that supports the Rapid Entry program currently utilized for the Northbrook Fire Department . There are no other manufacturers that support the rapid program in this responding jurisdiction. The system is utilized and manufactured uniquely for this responding Jurisdiction s for Rapid Entry, and Security Needs. The Knox® Rapid entry products are patented, trademark ® security Rapid Entry system. This is all supported with patented security features in the Cloud -base administrative software, providing key retention and eSystem with pat ents and trademarks®

Because of the high-end security , no other manufacturer except the Knox Company offers this Rapid -Entry program directly to the jurisdictions , and for the City of Northbrook . For over 50 years, the Knox Company relationship has been one-on-one with Fire Departments / Universities , Government agencies throughout the World due to the High Security Patented products that are created exclusively for the Fire Department s. No other product may marry -up with this exclusive Keyway / Rapid Entry Program that is utilized for responding Department s. The Keyway, and the physical Knox box having a UL listing against physical attack and trademark ® ratings; only the highest security is manufactured. The complete Knox rapid entry program is a high security patent and trademark ® design . No duplications are permitted with this rapid entry system. No Distribution is permitted from the Knox Company .

Due to the High level of Nation Security ; both in Public Safety and the US Government , the Knox Company does not have distributions and or middlemen that intervene with the Knox Products. The protection and safety are for both the responding jurisdictions and Government agencies. This is the reason why the Knox Company works directly with municipalities across the World.

Knox Company
1601 W. Deer Valley Rd.
Phoenix, AZ 85027

MEMORANDUM

To: Village Manager Cara Pavlicek
From: CFO Steve Drazner
Date: 2026-07-14
Subject: Resolution expressing official intent regarding certain expenditures, related to land acquisition costs, to be reimbursed from proceeds of an obligation to be issued by the Village of Northbrook, Cook County, Illinois

Overview
This is a procedural action in accordance with the adopted FY27 Budget to capture capital expenditures related to land acquisition for the construction of a future Police Station and Fire Headquarters, to be funded with a future tax exempt general obligation bond issuance.

Fiscal Impact
N/A.

Recommendation
Approval.

Strategic Priority
Public and Community Safety. Provide public and community safety through education, prevention, and aligning resources with community needs.

Background
It is recommended that the Village issue the formal notice, generally referred to as a Reimbursement Resolution, of its future intent under Federal tax law to issue tax exempt bonds to reimburse "hard" costs being incurred for land acquisition for the construction of a new Police Station and Fire Headquarters facility. This action was anticipated in the adopted FY27 budget.

Per Federal guidelines, the allowable retroactive lookback period is 60 days from the passage of this Resolution, and would thus cover hard construction costs paid between May 15, 2026 through July 14, 2026. This Reimbursement Resolution also captures any costs from the time this Resolution is adopted to the time when the bonds are issued in FY27.

The adoption of this Reimbursement Resolution will permit the Village to remain in full

compliance with Federal tax law and reimburse itself for certain costs once the applicable GO Bond Series is issued, subject to Village Board approval.

It must be noted that the Reimbursement Resolution references the maximum principal amount of bonds reasonably expected to be issued for the expenditure at hand in the amount of $8 million along with a brief description (land acquisition costs). This is in addition to the $24 million per the previous Reimbursement Resolution adopted by the Board on April 28, 2026 for the Fleet Maintenance Garage and Fire Station #11 construction costs. The reimbursement amount stated in the Reimbursement Resolution does not obligate the Village in any way to issue a specific amount of bonds or debt. It is possible for the Village to pay for capital project expenses (hard costs such as land acquisition) incurred prior to issuing tax-exempt bonds, and then reimburse itself for those initial expenditures out of the tax-exempt bond proceeds once issued. The ability to do so will be financially advantageous to the Village by covering these "hard" costs with bond proceeds, thus providing more financial flexibility. Total eligible Facility CIP expenses paid related to these project hard costs retroactive to May 15, 2026 (60 day lookback) totals $115,000 for the land purchase contractual escrow deposit. However, and more importantly, adoption of this Resolution will also permit the Village to capture eligible project costs from the adoption date of this Reimbursement Resolution through the date that the GO bonds are issued in the future.

Reimbursement Resolution- Land Acquisition

RESOLUTION expressing official intent regarding certain capital expenditures, related to land acquisition costs, to be reimbursed from proceeds of an obligation to be issued by the Village of Northbrook, Cook County, Illinois.

* * *

WHEREAS, the President and the Board of Trustees (the *"Corporate Authorities"*) of the Village of Northbrook, Cook County, Illinois (the *"Village"*), have developed a list of capital projects described in *Exhibit A* hereto (the *"Projects"*); and

WHEREAS, all or a portion of the expenditures relating to the Projects (the *"Expenditures"*) (i) have been paid within the 60 days prior to the passage of this Resolution or (ii) will be paid on or after the passage of this Resolution; and

WHEREAS, the Village reasonably expects to reimburse itself for the Expenditures with the proceeds of an obligation:

NOW, THEREFORE, Be It and It Is Hereby Resolved by the President and the Board of Trustees of the Village of Northbrook, Cook County, Illinois, as follows:

Section 1. Incorporation of Preambles. The Corporate Authorities hereby find that all of the recitals contained in the preambles to this Resolution are full, true and correct and do incorporate them into this Resolution by this reference.

Section 2. Intent to Reimburse. The Village reasonably expects to reimburse the Expenditures with proceeds of an obligation.

Section 3. Maximum Amount. The maximum principal amount of the obligation expected to be issued to reimburse the Expenditures is $8,000,000.

Section 4. Ratification. All actions of the officers, agents and employees of the Village that are in conformity with the purposes and intent of this Resolution, whether taken before or after the adoption hereof, are hereby ratified, confirmed and approved.

Section 5. Severability. If any section, paragraph, clause or provision of this Resolution shall be held to be invalid or unenforceable for any reason, the invalidity or unenforceability of such section, paragraph, clause or provision shall not affect any of the remaining provisions of this Resolution.

Section 6. Repeal. All resolutions or parts thereof in conflict herewith be and the same are hereby repealed and this Resolution shall be in full force and effect forthwith upon its adoption.

ADOPTED by the Corporate Authorities on July 14, 2026.

AYES: _____

_____

NAYS: _____

ABSENT: _____

APPROVED on July 14, 2026.

_____
President, Village of Northbrook, Cook County, Illinois

RECORDED in the Village Records on July 14, 2026.

Attest:

_____
Village Clerk, Village of Northbrook,
Cook County, Illinois

EXHIBIT A

DESCRIPTION OF CAPITAL PROJECTS

Land acquisition.

STATE OF ILLINOIS)
) SS
COUNTY OF COOK)

CERTIFICATION OF MINUTES AND RESOLUTION

I, the undersigned, do hereby certify that I am the duly qualified and acting Village Clerk of the Village of Northbrook, Cook County, Illinois (the *"Village"*), and as such official I am the keeper of the records and files of the Village and of the President and Board of Trustees of the Village (the *"Corporate Authorities"*).

I do further certify that the foregoing constitutes a full, true and complete transcript of the minutes of the meeting of the Corporate Authorities held on the 14th day of July, 2026, insofar as same relates to the adoption of a resolution entitled:

> RESOLUTION expressing official intent regarding certain capital expenditures, related to land acquisition costs, to be reimbursed from proceeds of an obligation to be issued by the Village of Northbrook, Cook County, Illinois.

a true, correct and complete copy of which said resolution as adopted at said meeting appears in the foregoing transcript of the minutes of said meeting.

I do further certify that the deliberations of the Corporate Authorities on the adoption of said resolution were taken openly; that the vote on the adoption of said resolution was taken openly; that said meeting was held at a specified time and place convenient to the public; that notice of said meeting was duly given to all newspapers, radio or television stations and other news media requesting such notice; that an agenda for said meeting was posted at the location where said meeting was held and at the principal office of the Corporate Authorities at least 48 hours in advance of the holding of said meeting and on a day which was not a Saturday, Sunday or legal holiday for Illinois municipalities, and remained continuously available for public review until adjournment of said meeting; that a true, correct and complete copy of said agenda as so posted is attached hereto as *Exhibit A;* that said meeting was called and held in strict compliance with the provisions of the Open Meetings Act of the State of Illinois, as amended, and the Illinois Municipal Code, as amended; and that the Corporate Authorities have complied with all of the provisions of said Act and said Code and with all of the procedural rules of the Corporate Authorities in the adoption of said resolution.

IN WITNESS WHEREOF, I hereunto affix my official signature and the seal of the Village, this 14th day of July, 2026.

_____
Village Clerk

[SEAL]

MEMORANDUM

To: Village Manager Cara Pavlicek
From: Director of Development & Planning Services Amy McEwan
Date: 2026-07-14
Subject: An Ordinance Amending the Northbrook Zoning Code (Plan Commission Docket No. PCD-26-03)

Overview
As recommended by the Plan Commission, certain technical corrections and amendments are presented to clarify and correct the Northbrook Zoning Code adopted September 9, 2025 by Ordinance No. 2025-55.

Fiscal Impact
N/A.

Recommendation
Approval.

Strategic Priority
Economic Vitality. Promote Northbrook as a thriving community and economic leader. Designation of a Strategic Plan goal does not indicate the merit or recommendation of requested relief.

Background

On July 14, 2026, the Board of Trustees is scheduled to consider two Ordinances approving a series of amendments to the Northbrook Zoning Code and Northbrook Comprehensive Plan as part of a Village initiated application. The Northbrook Zoning Code was adopted by Ordinance 25-55 on September 9, 2025, and since that time staff has maintained a list of technical corrections and clarifications necessary for the new Zoning Code.

Simultaneously, staff has begun the process of updating the Northbrook Comprehensive Plan, which was adopted on December 14, 2010. Since its adoption, metrics in the plan have adjusted over the last fifteen years and the Village adopted a Strategic Plan and branding identity. At this time, staff has begun to update the metrics and modify language to align with the adopted Strategic Plan and other Village plans which have been created since 2010, as

well as shift the format to align with the Village's current branding.

The proposed amendments outlined in the exhibits attached to the included draft ordinances underwent a public hearing process at the Plan Commission on May 19, 2026 and June 16, 2026. During the public hearing staff presented the proposed amendments and noted the reasoning behind the amendments. The Commission heard testimony from one resident regarding an interest in changing the goals of the Comprehensive Plan; however, that was not something contemplated with the amendments as the goals align with the recently adopted Strategic Plan, with the exception of one minor language adjustment to include language from the Strategic Plan in a title, without changing the actual goal.

Following the public hearing, the Commission unanimously recommended approval of the proposed amendments, with one additional amendment to the Downtown Area Policies to provide streetscape improvements as development occurs in the Village Green Overlay District as a whole, whereas previously it listed only a few blocks within the overlay district. This amendment is reflected in the attached Ordinance Amending the Comprehensive Plan Exhibit C. This item is placed on the Consent Agenda as is the practice when the Plan Commission has unanimously recommended approval.

The amendments to the Zoning Code are to correct several typographical errors, and to include language from the prior Zoning Code that was inadvertently excluded from the new Zoning Code. There were also a few amendments to add contextual language to items which will allow for more ease of clarity for users. The amendments are tracked in the attached Ordinance exhibits.

Included with the draft documents for approval are the staff reports and Plan Commission resolutions for review, as well as the minutes from the May 19, 2026 meeting. The minutes of the June 16, 2026 meeting were not yet available. On May 19, 2026 the Plan Commission adopted, by a vote of 6 -0 (three members absent), the attached Resolution No. 26-PC-04 recommending approval of the amendments, and on June 16 the Plan Commission adopted, by a vote of 9-0, the attached Resolution No. 26-PC-06 also recommending approval of one final amendment.

An Ordinance Amending the Northbrook Zoning Code
Zoning Code Ordinance Exhibits A-L
Supplemental - Plan Commission Minutes, Resolutions, and Reports
Supplemental - Staff Powerpoint

ORDINANCE 2026-_____

BE IT ORDAINED by the Board of Trustees of the Village of Northbrook, County of Cook and State of Illinois THAT:

An Ordinance Amending the Northbrook Zoning Code (Plan Commission Docket No. PCD-26-03)

shall be, and is hereby, adopted as follows:

Section 1. BACKGROUND.

The Village is a home rule municipal corporation pursuant to Article VII, Section 6(a) of the Constitution of the State of Illinois of 1970.

The Village is authorized to enact laws and regulations governing the annexation, subdivision, use, and development of land within its jurisdiction pursuant to its powers under Article 11 of the Illinois Municipal Code (65 ILCS 5/11-1-1 *et seq.*) and its home rule powers to preserve and promote the health, safety, and welfare of the residents of the Village.

The Northbrook Zoning Code was adopted September 9, 2025 by Ordinance No. 2025-55 (the "***Zoning Code***"). Certain technical corrections and amendments are necessary to clarify and correct the Zoning Code. The President and Board of Trustees of the Village of Northbrook (the "***Applicant***") has filed an application to address these technical corrections and amendments to the Zoning Code.

The Board of Trustees hereby find that it is in the best interest of the public and the Village to amend the Zoning Code as provided in this Ordinance ("***Text Amendment***"). The Text Amendment is adopted in accordance with the Zoning Code and pursuant to the Village's home rule authority.

Section 2. PUBLIC HEARINGS.

A public notice for the Text Amendment was duly published on May 4, 2026 and May 29, 2026 on the Village Public Notices and Hearings webpage and public hearings were held at the Plan Commission's regular meetings on May 19, 2026 and June 16, 2026.

Section 3. AMENDMENT TO ARTICLE 1 OF THE ZONING CODE.

Subsection 1-102.A, entitled "Authority and Purpose", of Article 1 of the Zoning Code entitled "General Provisions" shall be, and is hereby amended as set forth in ***Exhibit A*** to this Ordinance.

Section 4. AMENDMENTS TO ARTICLE 2 OF THE ZONING CODE.

Subparagraph 2-103 B2(b), entitled "Pre-Application Meeting", Paragraph 2-104 B1, entitled "Standards Subject to General Review Criteria", and Paragraph 2-114 B1 entitled "Prohibited Variances" of Article 2 of the Zoning Code, entitled "Code Administration and Enforcement" shall be, and are hereby amended as set forth in ***Exhibit B*** to this Ordinance.

Section 5. AMENDMENTS TO ARTICLE 3 OF THE ZONING CODE.

Table 3-105 A, entitled “Principal Uses by Single-Family Residential Districts”, Table 3-106 A, entitled “Allowed Encroachments into Required Yard”, Table 3-107 A, entitled “Accessory Uses by Single-Family Residential District”, Paragraph 3-107 B, entitled “Accessory Use Supplemental Standards”, and Paragraph 3-108 B3, entitled “Parking of Trailers, Boats, and Other Vehicles.” of Article 3 of the Zoning Code, entitled “Single-Family Residential District Standards” shall be, and are hereby amended as set forth in ***Exhibit C*** to this Ordinance.

Section 6. AMENDMENTS TO ARTICLE 4 OF THE ZONING CODE.

Table 4-103 D, entitled “VGRC District Dimensional Standards”, Subparagraph 4-104 E1(b), entitled “Allowance”, Table 4-105-A, entitled "Principal Uses by Multi-Family Residential District”, Table 4-106-A entitled "Allowed Encroachments into Required Yard”, and Table 4-107-A entitled "Accessory Uses by Multi-Family Residential District” of Article 4 of the Zoning Code, entitled "Multi-Family and Mixed Use District Standards” shall be, and are hereby amended as set forth in ***Exhibit D*** to this Ordinance.

Section 7. AMENDMENTS TO ARTICLE 5 OF THE ZONING CODE.

Table 5-105-A, entitled “Principal Uses by Office District”, Table 5-106-A, entitled "Allowed Encroachments into Required Yard”, Table 5-107-A, entitled "Accessory Uses by Office District”, and Paragraph 5-107 B4, entitled "Outdoor Display/Sale of Merchandise/Outdoor Seating for Eating and Drinking Uses” of Article 5 of the Zoning Code, entitled "Office District Standards” shall be, and are hereby amended as set forth in ***Exhibit E*** to this Ordinance.

Section 8. AMENDMENTS TO ARTICLE 6 OF THE ZONING CODE.

Table 6-105-A, entitled “Principal Uses by Commercial District”, Table 6-106-A, entitled "Allowed Encroachments into Required Yard”, and Table 6-107-A, entitled "Accessory Uses by Commercial District” of Article 6 of the Zoning Code, entitled "Commercial District Standards” shall be, and are hereby amended as set forth in ***Exhibit F*** to this Ordinance.

Section 9. AMENDMENTS TO ARTICLE 7 OF THE ZONING CODE.

Table 7-105-A, entitled “Principal Uses by Industrial District”, Table 7-106-A, entitled "Allowed Encroachments into Required Yard”, Table 7-107-A, entitled "Accessory Uses by Industrial District”, and Paragraph 7-107 B3 , entitled “Outdoor Display/Sale of Merchandise/Outdoor Seating for Eating and Drinking Uses” of Article 7 of the Zoning Code, entitled "Industrial District Standards” shall be, and are hereby amended as set forth in ***Exhibit G*** to this Ordinance.

Section 10. AMENDMENTS TO ARTICLE 8 OF THE ZONING CODE.

Table 8-105-A, entitled "Principal Uses Allowed by Institutional and Open Space District”, Table 8-106-A, entitled "Allowed Encroachments into Required Yard”, and Table 8-107-A, entitled "Accessory Uses Allowed by Institutional and Open Space Districts” of Article 8 of the Zoning Code, entitled "Institutional and Open Space Districts Standards” shall be, and are hereby amended as set forth in ***Exhibit H*** to this Ordinance.

Section 11. AMENDMENTS TO ARTICLE 9 OF THE ZONING CODE.

Table 9-103-C-3, entitled “Techny Overlay Principal Uses” of Article 9 of the Zoning

Code, entitled "Overlay District Standards" shall be, and is hereby amended as set forth in ***Exhibit I*** to this Ordinance.

Section 12. AMENDMENTS TO ARTICLE 10 OF THE ZONING CODE.

Subsection 10-102 D, entitled "Vehicle Parking Amount.", Table 10-102-D, entitled "Minimum Vehicle Parking Requirements", Paragraph 10-102 F3, entitled "Reduction of Required Number of Parking Spaces in Excess of Allowable Parking Variation", Table 10-106-G3(c), entitled "Transition Landscape Area Type C Requirements", Table 10-108-B2(a), entitled "Maximum Fence and Wall Height", and Table 10-108 B2(b), entitled "Allowed Fence Materials per District" of Article 10 of the Zoning Code, entitled "General Development Standards" shall be, and are hereby amended as set forth in ***Exhibit J*** to this Ordinance.

Section 13. AMENDMENTS TO ARTICLE 11 OF THE ZONING CODE.

Table 11-102-D, entitled "Allowed Sign Types per Office, Commercial, Industrial, Institutional, and Open Space Districts", Subsection 11-104 E, entitled "Electronic Message Boards", Paragraph 11-106 A6, entitled "Illumination", Paragraph 11-106 F5, entitled "Illumination", Subparagraph 11-107 B1(b)i, entitled "Duration of Display", Subparagraph 11-107 B3(a), entitled "Maximum Area", Subparagraph 11-107 B3 (e), entitled "Location", Paragraph 11-108 B4, entitled "Maximum Number of Sign Faces", and Paragraph 11-108 C7, entitled "Duration of Display" of Article 11 of the Zoning Code, entitled "Sign Standards" shall be, and are hereby amended as set forth in ***Exhibit K*** of this Ordinance.

Section 14. AMENDMENT TO ARTICLE 14 OF THE ZONING CODE.

Section 14-106, entitled "E Definitions", Subsection 14-107 W, entitled "Fuel Sales", and Subsection 14-117 T, entitled "Public Cultural and Community Facilities" of Article 14 of the Zoning Code, entitled "Definitions" shall be, and are hereby amended as set forth in ***Exhibit L*** of this Ordinance.

Section 15. EFFECTIVE DATE.

This Ordinance shall be in full force and effect ten days after its passage, approval, and publication in pamphlet form in the manner provided by law.

PASSED: This __ day of July 2026.

AYES: ()

NAYS: ()

ABSENT: ()

ABSTAIN: ()

_____
Village President

ATTEST:

_____
Village Clerk

EXHIBIT A

Subsection 1-102.A, entitled “Authority and Purpose”, of Article 1 of the Zoning Code entitled "General Provisions” shall be amended as follows (deletions are struck through and additions are shown as underlined):

5. **Zoning Map.**

a. Map Incorporated. The location and boundaries of the zoning districts established by this Code are as shown on a map entitled "Zoning Map of the Village of Northbrook, Illinois," hereafter referred to as the Zoning Map, which is by this reference incorporated as part of this Code. All notations, references and other information shown on the Zoning Map, and all amendments thereto, shall be as much a part of this Code as if specifically set forth and literally described herein.

b. Omitted Land. It is the intent of this Code that the entire area of the Village, including all land and water areas, be included in the districts established by this Code. Any area lying within the Village but not shown on the Zoning Map as being included in such a district shall be deemed to be, and it is hereby, classified in the R-1 Single Family Residential District.

c. District Boundaries. In the event that any uncertainty exists with respect to the intended boundaries of the various districts as shown on the Zoning Map, the following rules shall apply:

i. The district boundaries are the center lines of tollways, expressways, highways, streets, alleys, waterways, railroads and other rights-of-way unless otherwise indicated. Where designation of a boundary line on the Zoning Map coincides with the location of any such right-of-way, the center line of such right-of-way shall be construed to be the boundary of such district.

ii. Where a district boundary does not coincide with the location of any right-of-way but does coincide with a lot line, such lot line shall be construed to be the boundary of such district.

iii. Where a district boundary does not coincide with the location of any right-of-way or lot line, the district boundary shall be determined by the use of the scale shown on the Zoning Map.

iv. The exact location of the district boundaries of the Flood Hazard Overlay District shall be determined as provided in Subsection 9-105 D of this Code.

6. **Annexed Land.**

a. Annexation of Fully Developed Land. All land which shall, after the effective date of this Code, be annexed to the Village and which shall, on the date of such annexation, be fully developed and have no area sufficient for the creation of a developable zoning lot shall upon such annexation be automatically classified into the Village Zoning District that is, in the opinion of the Board of Trustees, most compatible with the development existing on and around such land.

b. Annexation of Undeveloped or Partially Developed Land. All land which, after the effective date of this Code, shall be annexed to the Village and which, on the date of such

annexation, shall be undeveloped or partially developed and have sufficient area for the creation of a developable zoning lot, shall upon such annexation be automatically classified in the R-1 Single Family Residential District.

~~d.~~c. Application for Different Classification. When any land is classified pursuant to this Section, it shall remain so classified unless and until an application to amend such classification is filed and granted pursuant to Article 2 of this Code, which application may, however, be filed prior to or contemporaneously with the annexation of the land in question.

EXHIBIT B

Subparagraph 2-103 B2(b), entitled "Pre-Application Meeting", Paragraph 2-104 B1, entitled "Standards Subject to General Review Criteria", and Paragraph 2-114 B1 entitled "Prohibited Variances" of Article 2 of the Zoning Code, entitled "Code Administration and Enforcement" shall be, and is hereby amended as follows (deletions are struck through and additions are shown as underlined):

Subparagraph 2-103 B2(b), entitled "Pre-Application Meeting":

b. A pre-application meeting is required for all application types unless waived by the Village Manager ~~of Development and Planning Services~~.

Paragraph 2-104 B1, entitled "Standards Subject to General Review Criteria":

1. **Standards Subject to General Review Criteria**.

   a. Section 3-106-A: Single-Family District dimensional standards less than 1' for a front and corner side setback, side setback, and less than 5' for a rear setback; and dimensional standards encroachments: allowed encroachments into required yard,

   b. Section 4-106-A: Multi-Family and Mixed-use District dimensional standards less than 1' for a front and corner side setback, side setback, and less than 5' for a rear setback; and dimensional standards encroachments: allowed encroachments into required yard setbacks,

   c. Section 5-106-A: Office District dimensional standards less than 1' for a front and corner side setback, side setback, and less than 5' for a rear setback; and dimensional standards encroachments: allowed encroachments into required yard setbacks,

   d. Section 6-106-A: Commercial District dimensional standards less than 1' for a front and corner side setback, side setback, and less than 5' for a rear setback; and dimensional standards encroachments: allowed encroachments into required yard setbacks,

   e. Section 7-106-A: Industrial District dimensional standards less than 1' for a front and corner side setback, side setback, and less than 5' for a rear setback; and dimensional standards encroachments: allowed encroachments into required yard setbacks,

   f. Section 8-106-A: Institutional and Open Space District dimensional standards less than 1' for a front and corner side setback, side setback, and less than 5' for a rear setback; and dimensional standards encroachments: allowed encroachments into required yard setbacks,

Paragraph 2-114 B1 entitled "Prohibited Variances":

1. **Prohibited Variances**.

   a. In no event shall a Variance be considered which would allow the establishment of a use which is not otherwise allowed in a district, or which would change the district classification or the district boundary of the property in question.

   b. No parking variance shall be considered in excess of 25%; for such request a special permit shall be requested pursuant to Section 10-102-F-3(b)

   ~~b.~~c. No Variance shall be considered that is intended as a temporary measure only.

   ~~c.~~d. No Variances of the Flood Hazard Overlay District regulations shall be considered.

EXHIBIT C

Table 3-105 A, entitled "Principal Uses by Single-Family Residential Districts", Table 3-106 A, entitled "Allowed Encroachments into Required Yard", Table 3-107 A, entitled "Accessory Uses by Single-Family Residential District", Paragraph 3-107 B, entitled "Accessory Use Supplemental Standards", and Paragraph 3-108 B3, entitled "Parking of Trailers, Boats, and Other Vehicles." of Article 3 of the Zoning Code, entitled "Single-Family Residential District Standards" shall be, and is hereby amended as follows (deletions are struck through and additions are shown as underlined):

Table 3-105 A, entitled "Principal Uses by Single-Family Residential Districts"

Table 3-105-A: Principal Uses by Single-Family Residential District						
Use	**Additional Regulation**	**R-1**	**R-2**	**R-3**	**R-4**	**R-5**
Commercial Kitchen						
Contractor Facility						
Crematorium						
Dry Cleaning Facility, Processing On-Site						
Building Material, Machinery, and Equipment Sales or Storage						
Fuel Sales (inclusive of EV charging stations)						
Industry, Heavy						

Table 3-106 A, entitled "Allowed Encroachments into Required Yard"

Table 3-106-A. Allowed Encroachments into Required Yard		
Encroachment Type	**Allowed Location**	**Limitations of Encroachment**
Accessibility Ramps and Fire Escapes required by the Illinois State Building Code	any required yard	Shall be a minimum of five feet from the property line unless otherwise approved by the Village Manager as an Administrative Modifications per Section 2-104.
Air Conditioning Units, Heat Pumps, Generators, and similar equipment	rear and interior side yard	Shall be a minimum of five feet from any lot line.
Antennae	rear and interior side yard	Shall be a minimum of three feet from any lot line.
Basketball equipment	any required yard	A maximum of one per front yard shall be allowed. Shall be a minimum of five feet from side and rear lot lines and ten feet from a front lot line.
Bay Windows and Balconies	front and corner side yard	Shall extend no more than three feet from the applicable elevation of the building and at least five feet from the property line. May not have any foundation or footing and may only project from a façade.
	interior side and rear yard	Shall be a ~~minimum~~ maximum of three feet from the applicable building elevation. May not have any foundation or footing and may only project from a façade.
Driveways and Walkways	any required yard	• Shall comply with the standards of Section 10-102-C. • Shall be a minimum of two feet from the interior side property line.
Fences, Walls, and Berms	any required yard	Shall comply with the standards of Section 10-108.
Flagpoles	any required yard	Shall be a minimum of five feet from the property line.
~~Generators~~	~~rear and interior side yard~~	~~Shall be a minimum of five feet from any lot line.~~

Uncovered and Unenclosed Steps and Stairs	front ~~and,~~ corner side, and rear yard	May encroach up to six feet from the applicable elevation of the building and no closer than five feet to the property line, whichever is greater.
Uncovered Decks, Patios, Stoops and similar Features	front, interior, and corner side yard	• May encroach up to five feet into a required yard and no closer than five feet to the property line, whichever is less. • May not exceed 30 inches in height above the average finished grade.
	rear and side yard	• Shall be a minimum of five feet from the property line. • May not exceed 30 inches in height above the average finished grade.

Table 3-107 A, entitled "Accessory Uses by Single-Family Residential District"

Table 3-107-A: Accessory Uses by Single-Family Residential District						
Use	**Additional Regulation**	**R-1**	**R-2**	**R-3**	**R-4**	**R-5**
Solar Energy Collection System, Canopy Mounted	3-107-B-4	P	P	P	P	P
Solar Energy Collection System, Ground Mounted	3-107-B-5	P	P	P	P	P
Solar Energy Collection System, Roof Mounted	3-107-B-6	P	P	P	P	P
Sport Court	3-107-B-7	P	P	P	P	P

Paragraph 3-107 B, entitled "Accessory Use Supplemental Standards"

7. **Sport Court.** Outdoor Sport Court accessory to any dwelling located in any single family residential district shall be screened by a perimeter landscaped open space equal in width to the applicable required yard or ten (10) feet, whichever is less, and consisting of an opaque fence, wall or densely planted evergreen hedge of not less than five (5) feet in height. Such screening shall be provided on all sides of such facility visible from any abutting property or any public or private street.

Paragraph 3-108 B3, entitled "Parking of Trailers, Boats, and Other Vehicles."

3. **Parking of Trailers, Boats, and Other Vehicles.** Trailers, boats, and other vehicles ~~shall not be parked in the front yard or corner side yard.~~ shall not be connected to utilities, occupied, or located in front of a principal structure within these districts.

EXHIBIT D

Table 4-103 D, entitled "VGRC District Dimensional Standards", Subparagraph 4-104 E1(b), entitled "Allowance", Table 4-105-A, entitled "Principal Uses by Multi-Family Residential District", Table 4-106-A entitled "Allowed Encroachments into Required Yard", and Table 4-107-A entitled "Accessory Uses by Multi-Family Residential District" of Article 4 of the Zoning Code, entitled "Multi-Family and Mixed Use District Standards" shall be, and is hereby amended as follows (deletions are struck through and additions are shown as underlined):

Table 4-103 D, entitled "VGRC District Dimensional Standards"

Table 4-103-D VGRC District Dimensional Standards				
1 = Single-Family Detached		*3 = Townhouse;*		
2 = Multi-Unit Building, All Units;		*4 = All Other Uses*		
	1	*2*	*3*	*4*
Lot Standards				
Lot Area, Minimum (sq ft)	25,000	25,000	25,000	25,000
Lot Width, Minimum (ft)	40	18	100	40
Yard Setbacks				
Front, Minimum (ft)	20	10	25	10
Corner Side, Minimum (ft)	20	10	12	10
Interior Side, Minimum (ft)	5	5	12	5
Rear, Minimum (ft)	20	15	20	15
Building Standards				
Height, Maximum (ft)	30	45	45	45 [1]
Height, Maximum (stories)	2	4	4	4
Lot Coverage (%)	60	80	75	N/A
Note				
[1] A Planned Development may, by right, be constructed to a maximum height of ~~64~~ 65 feet or 5 stories, whichever is less.				

Subparagraph 4-104 E1(b), entitled "Allowance"

1. **Allowance**.

   a. Principal uses are allowed by district as established in Table 4-105-A Principal Uses.

   b. A parcel may contain one or more principal uses or principal buildings in the RS, MFRC, RLC, and VGRC Districts only. The establishment of multiple principal uses or principal buildings on a parcel shall require a Special Permit as specified in Section 2-~~112~~113.

   c. A development with multiple principal uses shall include only those principal uses designated in Table 4-105-A Principal Uses as allowed in the applicable zoning district, and each principal use shall be subject to all applicable supplemental standards.

Table 4-105-A, entitled "Principal Uses by Multi-Family Residential District"

Table 4-105-A: Principal Uses by Multi-Family Residential District								
Use	**Additional Regulation**	**R-6**	**R-7**	**R-8**	**RS**	**MFRC**	**RLC**	**VGRC**
Residential Uses	Additional Regulation	R-6	R-7	R-8	RS	MFRC	RLC	VGRC
Community Residences (up to 8 residents)	4-105-B-1	P	P	P	P			P
Dwelling, Cottage Court	4-105-B-2	P	P	P	P	P	P	
Dwelling, Duplex	4-105-B-3	P	P	P	P		P	
Dwelling, Single-Family Detached		P	P	P	P		P	
Dwelling, Townhouse	4-105-B-4	P	P	P	P	P	P	P
Dwelling, Triplex/Quadplex	4-105-B-5	P	P	P	P	P	P	

Table 4-105-A: Principal Uses by Multi-Family Residential District								
Use	**Additional Regulation**	**R-6**	**R-7**	**R-8**	**RS**	**MFRC**	**RLC**	**VGRC**
Fuel Sales (inclusive of EV charging stations)								

Table 4-106-A entitled "Allowed Encroachments into Required Yard"

Table 4-106-A: Allowed Encroachments into Required Yard		
Encroachment Type	**Allowed Location**	**Limitations of Encroachment**
Accessibility Ramps and Fire Escapes required by the Illinois State Building Code	any required yard	Shall be a minimum of three feet from the property line unless otherwise approved by the Village Manager as an administrative adjustment per Section 2-104.
Air Conditioning Units, Heat Pumps, Generators, and similar equipment	rear and interior side yard	Shall be a minimum of three feet from any lot line.
Antennae	rear and interior side yard	Shall be a minimum of three feet from any lot line.
Basketball equipment	any required yard	A maximum of one per front yard shall be allowed. Shall be a minimum of five feet from side lot lines and ten feet from a front lot line.
Bay Windows and Balconies	front and corner side yard	Shall extend no more than five feet from the applicable elevation of the building and at least five feet from the property line. May not have any foundation or footing and may only project from a façade.
	interior side and rear yard	Shall be a ~~minimum~~ maximum of three feet from the applicable building elevation. May not have any foundation or footing and may only project from a façade.
Driveways and walkways	any required yard	• Shall comply with the standards of Section 10-102-C. • Shall be a minimum of two feet from the interior side property line.
Fences, Walls, and Berms	any required yard	Shall comply with the standards of Section 10-108.
Flagpoles	any required yard	Shall be a minimum of five feet from the property line.
~~Generators~~	~~rear and interior side yard~~	~~Shall be a minimum of three feet from any lot line.~~

Uncovered and Unenclosed Steps and Stairs	front ~~and,~~ corner side, and rear yard	May encroach up to six feet from the applicable elevation of the building and no closer than five feet to the property line, whichever is greater.
Uncovered Decks, Patios, Stoops and similar Features	front, interior, and corner side yard	• May encroach up to five feet into a required yard and no closer than five feet to the property line, whichever is less. • May not exceed 30 inches in height above the average finished grade.
	rear and side yard	• Shall be a minimum of five feet from the property line. • May not exceed 30 inches in height above the average finished grade.

Table 4-107-A entitled "Accessory Uses by Multi-Family Residential District"

Table 4-107-A: Accessory Uses by Multi-Family Residential District								
Use	**Additional Regulation**	**R-6**	**R-7**	**R-8**	**RS**	**MFRC**	**RLC**	**VGRC**
Solar Energy Collection System, Canopy Mounted	4-107-B-5	P	P	P	P	P	P	P
Solar Energy Collection System, Ground Mounted	4-107-B-6	P	P	P	P	P	P	P
Solar Energy Collection System, Roof Mounted	4-107-B-7	P	P	P	P	P	P	P
Sport Court								

EXHIBIT E

Table 5-105-A, entitled "Principal Uses by Office District", Table 5-106-A, entitled "Allowed Encroachments into Required Yard", Table 5-107-A, entitled "Accessory Uses by Office District", and Paragraph 5-107 B4, entitled "Outdoor Display/Sale of Merchandise/Outdoor Seating for Eating and Drinking Uses." of Article 5 of the Zoning Code, entitled "Office District Standards" shall be, and is hereby amended as follows (deletions are struck through and additions are shown as underlined):

Table 5-105-A, entitled "Principal Uses by Office District"

Table 5-105-A: Principal Uses by Office District					
Use	**Additional Regulation**	**O-1**	**O-2**	**O-3**	**O-4**
Short-Term Rental					
Specialty Medical Care Facility			S		
Tobacco Retail Sale			P	P	P
Industrial and Vehicle Related Uses	*Additional Regulation*	O-1	O-2	O-3	O-4
Artisan Manufacturing					
Brewery/Winery/Distillery					
Car Wash	5-105-B-4			S	S
Cannabis Cultivation Center					
Cannabis Craft Grower					
Cannabis Infuser					
Cannabis Processor					
Commercial Kitchen					
Contractor Facility					
Crematorium					
Dry Cleaning Facility, Processing On-Site					
Building Material, Machinery, and Equipment Sales or Storage					
Fuel Sales (inclusive of EV charging stations)	5-105-B-5			P	P

Table 5-106-A, entitled "Allowed Encroachments into Required Yard"

Table 5-106-A: Allowed Encroachments into Required Yard		
Encroachment Type	**Allowed Location**	**Limitations of Encroachment**
Accessibility Ramps and Fire Escapes required by the Illinois State Building Code	any required yard	Shall be a minimum of three feet from the property line unless otherwise approved by the Village Manager as an Administrative Adjustment per Section 2-104.
Air Conditioning Units, Heat Pumps, Generators, and similar equipment	rear and interior side yard	Shall be a minimum of three feet from any lot line.
Antennae	rear and interior side yard	Shall be a minimum of three feet from any lot line.
Basketball equipment	any required yard	A maximum of one per front yard shall be allowed. Shall be a minimum of five (5) feet from side lot lines and 10 feet from a front lot line.
Bay Windows and Balconies	front and corner side yard	Shall extend no more than five (5) feet from the applicable elevation of the building and at least five (5) feet from the property line. May not have any foundation or footing and may only project from a façade.
	interior side and rear yard	Shall be a ~~minimum~~ maximum of three (3) feet from the applicable building elevation. May not have any foundation or footing and may only project from a façade.
Driveways and walkways	any required yard	• Shall comply with the standards of Section 10-102-C. • Shall be a minimum of two (2) feet from the interior side property line.
Fences, Walls, and Berms	any required yard	Shall comply with the standards of Section 10-108
Flagpoles	any required yard	Shall be a minimum of five (5) feet from the property line.
~~Generators~~	~~rear and interior side yard~~	~~Shall be a minimum of three (3) feet from any lot line.~~

Table 5-106-A: Allowed Encroachments into Required Yard		
Encroachment Type	**Allowed Location**	**Limitations of Encroachment**
Uncovered and Unenclosed Steps and Stairs	front ~~and,~~ corner side, and rear yard	May encroach up to six (6) feet from the applicable elevation of the building and no closer than five feet to the property line, whichever is greater.
Uncovered Decks, Patios, Stoops and similar Features	front, interior, and corner side yard	• May encroach up to five feet into a required yard and no closer than five feet to the property line, whichever is less. • May not exceed 30 inches in height above the average finished grade.

Table 5-107-A, entitled "Accessory Uses by Office District"

Table 5-107-A: Accessory Uses by Office District					
Use	**Additional Regulation**	**O-1**	**O-2**	**O-3**	**O-4**
Accessory Dwelling Unit (ADU), Attached					
Accessory Dwelling Unit (ADU), Detached					
Accessory Structure	5-107-B-1	P	P	P	P
ATM		P	P	P	P
Day Care Nursery		P			
Drive-Through Facility	5-107-B-2		P	P	P
Electric Vehicle Charging Station – Commercial	5-107-B-3	P	P	P	P
Garden		P	P	P	P
Home Based Daycare					
Home Occupation					
Outdoor Display - Permanent	~~5-107-B-4~~				
Sale of Merchandise – Permanent	~~5-107-B-4~~				
Outdoor Seating for Eating and Drinking Uses	5-107-B-4		P	P	P
Outdoor Storage / Open Lot					
Pool, Spa, and Hot Tub					
Solar Energy Collection System, Canopy Mounted	5-107-B-5	P	P	P	P
Solar Energy Collection System, Roof Mounted	5-107-B-7	P	P	P	P
Sport Court					

Paragraph 5-107 B4, entitled "Outdoor Display/Sale of Merchandise/Outdoor Seating for Eating and Drinking Uses."

4. ~~**Outdoor Display / Sale of Merchandise /**~~ **Outdoor Seating for Eating and Drinking Uses.**

   a. **Principal Use**. Outdoor seating~~/display~~ shall be allowed accessory to a legally conforming principal use only.

   b. **Location**. Accessory outdoor seating~~/display~~ areas may be located:

      i. On a public sidewalk directly in front of the principal use to which the outdoor seating is accessory so long as:

         a) A clear pathway at least five feet wide is maintained to allow through public pedestrian traffic along the sidewalk and from the sidewalk into the entrance to the establishment. A greater width may be required by the Village Manager to ensure the safe and convenient flow of pedestrian traffic, and

         b) A clear separation of at least five feet is maintained from any alley, crosswalk, fire hydrant, or similar public or emergency access feature in or near the sidewalk. A greater clear distance may be required by the Village Manager to ensure use of the public or emergency access features.

      ii. In a parking lot so long as:

         a) No more than 10 percent of the required parking spaces (per Section 10-102-D) are utilized,

         b) The outdoor seating~~/display~~ area is directly accessible from inside the principal use to which it is accessory, and

         c) The outdoor seating~~/display~~ area is surrounded by a barrier with a minimum height of three feet and maximum height of four feet.

      iii. Within the buildable area of the lot, per Section 5-107-B-1(d).

   c. **Noise**. No sound production or reproduction machine or device (including, but not limited to musical instruments, loud-speakers, and sound amplifiers) shall be used, operated, or played in an outdoor seating/display area within 50 feet of a residential use or residentially zoned property.

   d. **Hours of Operation**. Hours of operation shall be the same as those for the principal use to which the outdoor seating~~/display~~ area is accessory.

EXHIBIT F

Table 6-105-A, entitled “Principal Uses by Commercial District”, Table 6-106-A, entitled "Allowed Encroachments into Required Yard”, and Table 6-107-A, entitled "Accessory Uses by Commercial District” of Article 6 of the Zoning Code, entitled "Commercial District Standards” shall be, and is hereby amended as follows (deletions are struck through and additions are shown as underlined):

Table 6-105-A, entitled “Principal Uses by Commercial District”

Table 6-105-A: Principal by Commercial District					
Use	Additional Regulation	C-2	C-3	C-4	C-5
Fuel Sales (inclusive of EV charging stations)		S	S		S
Industry, Heavy					

Table 6-106-A, entitled "Allowed Encroachments into Required Yard”

Table 6-106-A. Allowed Encroachments into Required Yard		
Encroachment Type	Allowed Location	Limitations of Encroachment
Accessibility Ramps and Fire Escapes required by the Illinois State Building Code	any required yard	Shall be a minimum of three feet from the property line unless otherwise approved by the Village Manager as Administrative Adjustments per Section 2-104.
Air Conditioning Units, Heat Pumps, Generators, and similar equipment	rear and interior side yard	Shall be a minimum of three feet from any lot line.
Antennae	rear and interior side yard	Shall be a minimum of three feet from any lot line.
Basketball equipment	any required yard	A maximum of one per front yard shall be allowed. Shall be a minimum of five feet from side lot lines and ten feet from a front lot line.
Bay Windows and Balconies	front and corner side yard	Shall extend no more than five feet from the applicable elevation of the building and at least five feet from the property line. May not have any foundation or footing and may only project from a façade.
	interior side and rear yard	Shall be a ~~minimum~~ maximum of three feet from the applicable building elevation. May not have any foundation or footing and may only project from a façade.

Driveways and Walkways	any required yard	• Shall comply with the standards of Section 10-104. • Shall be a minimum of two feet from the interior side property line.
Fences, Walls, and Berms	any required yard	Shall comply with the standards of Section 10-108.
Flagpoles	any required yard	Shall be a minimum of five feet from the property line.
~~Generators~~	~~rear and interior side yard~~	~~Shall be a minimum of three feet from any lot line.~~

Uncovered and Unenclosed Steps and Stairs	front ~~and~~, corner side, and rear yard	May encroach up to six feet from the applicable elevation of the building and no closer than five feet to the property line, whichever is greater.
Uncovered Decks, Patios, Stoops and similar Features	front, interior, and corner side yard	• May encroach up to five feet into a required yard and no closer than five feet to the property line, whichever is less. • May not exceed 30 inches in height above the average finished grade.

Table 6-107-A, entitled "Accessory Uses by Commercial District"

Solar Energy Collection System, Roof Mounted Sport Court	6-107-B-7	P	P	P	P

EXHIBIT G

Table 7-105-A, entitled “Principal Uses by Industrial District”, Table 7-106-A, entitled "Allowed Encroachments into Required Yard”, Table 7-107-A, entitled "Accessory Uses by Industrial District”, and Paragraph 7-107 B3, entitled “Outdoor Display/Sale of Merchandise/Outdoor Seating for Eating and Drinking Uses” of Article 7 of the Zoning Code, entitled "Industrial District Standards” shall be, and is hereby amended as follows (deletions are struck through and additions are shown as underlined):

Table 7-105-A, entitled “Principal Uses by Industrial District”

Equipment Sales or Storage			P	P
Fuel Sales (inclusive of EV charging stations)	7-105-B-4	P	P	P

Table 7-106-A, entitled "Allowed Encroachments into Required Yard”

Table 7-106-A. Allowed Encroachments into Required Yard		
Encroachment Type	**Allowed Location**	**Limitations of Encroachment**
Accessibility Ramps and Fire Escapes required by the Illinois State Building Code	any required yard	Shall be a minimum of three feet from the property line unless otherwise approved by the Village Manager as a Administrative Adjustment per Section 2-104.
Air Conditioning Units, Heat Pumps, Generators, and similar equipment	rear and interior side yard	Shall be a minimum of three feet from any lot line.
Antennae	rear and interior side yard	Shall be a minimum of three feet from any lot line.
Basketball equipment	any required yard	A maximum of one per front yard shall be allowed. Shall be a minimum of five feet from side lot lines and ten feet from a front lot line.
Bay Windows and Balconies	front and corner side yard	Shall extend no more than five feet from the applicable elevation of the building and at least five feet from the property line. May not have any foundation or footing and may only project from a façade.
	interior side and rear yard	Shall be a ~~minimum~~ maximum of three feet from the applicable building elevation. May not have any foundation or footing and may only project from a façade.

Driveways and Walkways	any required yard	• Shall comply with the standards of Section 10-104. • Shall be a minimum of two feet from the interior side property line.
Fences, Walls, and Berms	any required yard	Shall comply with the standards of Section 10-108.
Flagpoles	any required yard	Shall be a minimum of five feet from the property line.
~~Generators~~	~~rear and interior side yard~~	~~Shall be a minimum of three feet from any lot line.~~

Uncovered and Unenclosed Steps and Stairs	front ~~and~~, corner side, and rear yard	May encroach up to six feet from the applicable elevation of the building and no closer than five feet to the property line, whichever is greater.
Uncovered Decks, Patios, Stoops and similar Features	front, interior, and corner side yard	• May encroach up to five feet into a required yard and no closer than five feet to the property line, whichever is less. • May not exceed 30 inches in height above the average finished grade.

Table 7-107-A, entitled "Accessory Uses by Industrial District"

Table 7-107-A: Accessory Uses by Industrial District				
Use	**Additional Regulation**	**ICS**	**I-1**	**I-2**
Solar Energy Collection System, Ground Mounted	7-107-B-6	P	P	P
Solar Energy Collection System, Roof Mounted	7-107-B-7	P	P	P
Sport Court				

Paragraph 7-107 B3, entitled "Outdoor Display/Sale of Merchandise/Outdoor Seating for Eating and Drinking Uses"

f. **License Required.** When located on public property a license agreement shall be obtained from the Village for proof of liability insurance and recorded with Cook County.

~~f.~~g. **Accessory Sale of Merchandise Indoors.** When located indoors in a property, the square footage area of the accessory retail sales shall not exceed 10% of the floor area of the building, or 1,000 square feet, whichever is less.

EXHIBIT H

Table 8-105-A, entitled "Principal Uses Allowed by Institutional and Open Space District", Table 8-106-A, entitled "Allowed Encroachments into Required Yard", and Table 8-107-A, entitled "Accessory Uses Allowed by Institutional and Open Space Districts" of Article 8 of the Zoning Code, entitled "Institutional and Open Space Districts Standards" shall be, and is hereby amended as follows (deletions are struck through and additions are shown as underlined):

Table 8-105-A, entitled "Principal Uses Allowed by Institutional and Open Space District"

Table 8-105-A: Principal Uses Allowed by Institutional and Open Space District			
Use	**Additional Regulation**	**IB**	**OS**
Dry Cleaning Facility, Processing On-Site			
Building Material, Machinery, and Equipment Sales or Storage			
Fuel Sales (inclusive of EV charging stations)			

Table 8-106-A, entitled "Allowed Encroachments into Required Yard"

Table 8-106-A. Allowed Encroachments into Required Yard		
Encroachment Type	**Allowed Location**	**Limitations of Encroachment**
Accessibility Ramps and Fire Escapes required by the Illinois State Building Code	any required yard	Shall be a minimum of three feet from the property line unless otherwise approved by the Village Manager as an Administrative Adjustment per Section 2-104.
Air Conditioning Units, Heat Pumps, Generators, and similar equipment	rear and interior side yard	Shall be a minimum of three feet from any lot line.
Antennae	rear and interior side yard	Shall be a minimum of three feet from any lot line.
Basketball equipment	any required yard	A maximum of one per front yard shall be allowed. Shall be a minimum of five feet from side lot lines and ten feet from a front lot line.
Bay Windows and Balconies	front and corner side yard	Shall extend no more than five feet from the applicable elevation of the building and at least five feet from the property line. May not have any foundation or footing and may only project from a façade.
	interior side and rear yard	Shall be a ~~minimum~~ maximum of three feet from the applicable building elevation. May not have any foundation or footing and may only project from a façade.

Driveways and Walkways	any required yard	• Shall comply with the standards of Section 10-108. • Shall be a minimum of two feet from the interior side property line.
Fences, Walls, and Berms	any required yard	Shall comply with the standards of Section 10-108.
Flagpoles	any required yard	Shall be a minimum of five feet from the property line.
~~Generators~~	~~rear and interior side yard~~	~~Shall be a minimum of three feet from any lot line.~~
Uncovered and Unenclosed Steps and Stairs	front ~~and~~, corner side, and rear yard	May encroach up to six feet from the applicable elevation of the building and no closer than five feet to the property line, whichever is greater.

Table 8-106-A. Allowed Encroachments into Required Yard		
Encroachment Type	**Allowed Location**	**Limitations of Encroachment**
Uncovered Decks, Patios, Stoops and similar Features	front, interior, and corner side yard	• May encroach up to five feet into a required yard and no closer than five feet to the property line, whichever is less. • May not exceed 30 inches in height above the average finished grade.

Table 8-107-A, entitled "Accessory Uses Allowed by Institutional and Open Space Districts"

Ground Mounted	8-107-B-4	P	P
Solar Energy Collection System, Roof Mounted	8-107-B-5	P	P
Sport Court			

EXHIBIT I

Table 9-103-C-3, entitled “Techny Overlay Principal Uses” of Article 9 of the Zoning Code, entitled "Overlay District Standards” shall be, and is hereby amended as follows (deletions are struck through and additions are shown as underlined):

Table 9-103-C-3, entitled “Techny Overlay Principal Uses”

Industrial and Vehicle Related Uses	*Additional Regulation*	C-5	O-3	O-4
Artisan Manufacturing				
Brewery/Winery/Distillery				
Car Wash				
Cannabis Cultivation Center				
Cannabis Craft Grower				
Cannabis Infuser				
Cannabis Processor				
Commercial Kitchen				
Contractor Facility				
Crematorium				
Dry Cleaning Facility, Processing On-Site				
Building Material, Machinery, and Equipment Sales or Storage				
Fuel Sales (inclusive of EV charging stations)				
Industry, Heavy				

EXHIBIT J

Subsection 10-102 D, entitled "Vehicle Parking Amount.", Table 10-102-D, entitled "Minimum Vehicle Parking Requirements", Paragraph 10-102 F3, entitled "Reduction of Required Number of Parking Spaces in Excess of Allowable Parking Variation.", Table 10-106-G3(c), entitled "Transition Landscape Area Type C Requirements", Table 10-108-B2(a), entitled "Maximum Fence and Wall Height", and Table 10-108 B2(b), entitled "Allowed Fence Materials per District" of Article 10 of the Zoning Code, entitled "General Development Standards" shall be, and is hereby amended as follows (deletions are struck through and additions are shown as underlined):

Subsection 10-102 D, entitled "Vehicle Parking Amount."

D. **Vehicle Parking Amount**. Table 10-102-D establishes the minimum number of required vehicle parking spaces per use. The maximum number of vehicle parking spaces allowed per use shall be 10 percent in excess of the minimum requirement.

Electric Vehicle charging stations may be located in required off-street parking spaces and may be counted toward satisfying minimum off-street parking space requirements.

Table 10-102-D, entitled "Minimum Vehicle Parking Requirements"

Table 10-102-D: Minimum Vehicle Parking Requirements	
Use	Minimum Parking Requirement
Car Wash	1 / 250 sq ft
Commercial Kitchen	1 / 1,000 sq ft
Contractor Shop	
Crematorium	
Dry Cleaner, Processing On Site	
Fuel Sales (inclusive of Electric Vehicle charging stations)	1 / 250 sq ft

Paragraph 10-102 F3, entitled "Reduction of Required Number of Parking Spaces in Excess of Allowable Parking Variation."

3. **Reduction of Required Number of Parking Spaces ~~in Excess of Allowable Parking Variation~~.**

a. **Reduction Allowed by Variation**. A parking reduction up to 25% of the required parking may, by Variation grated pursuant to Section 2-114 of this Code, be granted.

~~a.~~b. **Reduction ~~Authorized~~Allowed by Special Permit**. Notwithstanding any other provision of this Section, the Board of Trustees may, by Special Permit granted pursuant to Section 2-~~112~~ 113 of this Code, reduce the total number of off-street parking spaces required pursuant to Subsection 10-102-D of this Section in excess of the allowable 25% parking variation (Section 10-102-F-3(a)).

Table 10-106-G3(c), entitled "Transition Landscape Area Type C Requirements"

Table 10-106-G(3)(c). Transition Landscape Area Type C Requirements			
Specification		**Option 1**	**Option 2**
a.	Minimum Width [1]	20 feet	15 feet
b.	Fence/Wall [2]	optional	required
c.	Berm [3]	optional	optional
Minimum Number of Landscape Elements per 100 Linear Feet of Landscape Area Length			
d.	Evergreen Tree	3 ~~[4]~~	3 ~~[4]~~
e.	Canopy Tree	2	2
f.	Understory Tree	1	0
g.	Shrubs/Native Grasses	36	20
Notes			
[1] Required yard setbacks may be utilized for perimeter buffer landscape.			
[2] Fences/walls shall meet the standards established in Section 10-108.			
[3] Berms shall meet the standards of Section 10-108 and shall be installed, excluding the planting of required landscape material, at the time of site grading and prior to the commencement of any construction activity.			

Table 10-108-B2(a), entitled "Maximum Fence and Wall Height"

Table 10-108-~~A~~B-2(a) Maximum Fence and Wall Height						
Property Line	**District**					
	R-1, R-2 Districts	*R-3, R-4, R-5 Districts*	*R-6, R-7, R-8, RS, MFRC, RLC, VGRC Districts*	*O-1, O-2, O-3, O-4, C-2, C-3, C-4, C-5 Districts*	*ICS, I-1, I-2 Districts*	*I-B, OS Districts*
Front [1]	5 feet [~~2~~3]	4 feet	4 feet	prohibited	6 feet ~~[3]~~	6 feet [4]
Corner Side [~~1~~2]	5 feet [~~2~~3]	4 feet	4 feet	prohibited	6 feet ~~[3]~~	6 feet [4]
Interior Side	6 feet [4]	6 feet [4]	6 feet	8 feet	8 feet	8 feet ~~[3]~~ [4]
Rear	6 feet [4][5]	6 feet [4] [5]	6 feet [5]	8 feet	8 feet	8 feet ~~[3]~~ [4]
Notes						
[1] Through lot fences on Willow, Sanders, Waukegan, Dundee, Walters (west of Crestwood), Landwehr, Pfingsten, Techny, Voltz, Grant, or Sunset Ridge may have a height up to 6 feet.						
[~~1~~2] ~~If facing the front yard of a residential lot(s) across the street, front yard standards shall apply.~~The corner side yard of a lot immediately adjacent to and abutting another lot with a corner side yard may have a height up to 6 feet.						
[~~2~~3] Driveway gates installed within the fence may be up to 8 feet in height.						
~~[3] Fence or wall shall be setback a minimum of five feet from the property line and materials shall be restricted to architectural block, masonry, stone, or stucco on masonry only.~~						
[4] The Village Manager may approve, as an Administrative Adjustment (Section 2-104) an increase in fence height up to 12 feet to accommodate outdoor recreation areas. Sport courts with a 12 foot fence shall be set back a minimum of 10 feet from all lot lines.						
[5] Residential zoned properties adjacent to non-residential zoned properties shall be permitted a fence height up to 8 feet in rear yards.						

Table 10-108 B2(b), entitled "Allowed Fence Materials per District"

Table 10-108-~~A~~B-2(b) Allowed Fence Materials per District					
Key: ● = Allowed; ○ = Allowed by Approval of A Special Permit; Blank = Not Allowed					
Fence Material	*R-1, R-2, R-3, R-4, R-5 Districts*	*R-6, R-7, R-8, RS, MFRC, VGRC Districts*	*O-1, O-2, O-3, O-4, C-2, C-3, C-4, C-5 Districts*	*ICS, I-1, I-2 Districts*	*I-B, OS Districts*
Barbed Wire / Concertina Wire [1]				○	○
Cementitious Fiber Board	●	●	●	●	●
Vinyl Coated Chain Link	●[2][3]			●	● [2]
Curved/Spear Tip				●	●
Decorative Metal	●	●	●	●	●
Chicken Wire, Deer, and other Temporary Fence Materials					
Masonry	●	●	●	●	●
Particle Board or Plywood					
Stone	●	●	●	●	●
Stucco on Masonry	●	●	●	●	●
Vinyl/PVC	●	●	●	●	●
Waste Materials					
Wood Composite	●	●	●	●	●
Notes					
[1] Barbed wire shall be at least 6 feet above grade and shall not project beyond the property line.					
[2] Fences around the perimeter of ~~an athletic~~a sport court meeting all other standards of this Zoning Code may utilize black vinyl-coated chain link fence, without slats or inserts, and with a maximum height of 12 feet.					
[3] Fence material is permitted around the perimeter of ~~an athletic~~a sport court meeting all other standards of this Zoning Code, only.					

EXHIBIT K

Table 11-102-D, entitled "Allowed Sign Types per Office, Commercial, Industrial, Institutional, and Open Space Districts", Subsection 11-104 E, entitled "Electronic Message Boards", Paragraph 11-106 A6, entitled "Illumination", Paragraph 11-106 F5, entitled "Illumination", Subparagraph 11-107 B1(b)i, entitled "Duration of Display", Subparagraph 11-107 B3(a), entitled "Maximum Area", Subparagraph 11-107 B3 (e), entitled "Location", Paragraph 11-108 B4, entitled "Maximum Number of Sign Faces", and Paragraph 11-108 C7, entitled "Duration of Display" of Article 11 of the Zoning Code, entitled "Sign Standards" shall be, and is hereby amended as follows (deletions are struck through and additions are shown as underlined):

Table 11-102-D, entitled "Allowed Sign Types per Office, Commercial, Industrial, Institutional, and Open Space Districts"

Table 11-102-D: Allowed Sign Types per Office, Commercial, Industrial, and Institutional District														
Key: • = Sign Allowed, Permit Required; ○ = Sign Allowed, No Permit Required Blank = Sign Prohibited	**References**	**O-1**	**O-2**	**O-3**	**O-4**	**C-2**	**C-3**	**C-4**	**C-5**	**ICS**	**I-1**	**I-2**	**IB**	**OS**
Permanent Building Sign Standards														
Awning Sign	11-102-A-1	•	•	•	•	•	•	•	•	•	•	•	•	•
Projecting Sign	11-102-A-15	•	•	•	•	•	•	•	•	•	•	•	•	
Wall Sign	11-102-A-22	•	•	•	•	•	•	•	•	•	•	•	•	•
Window Sign, Permanent	11-102-A-23	•	•	•	•	•	•	•	•	•	•	•	•	•
Permanent Ground Sign Standards														
Drive-Through Sign	11-102-A-3		•	•	•	•	•	•	•					
On-Site Circulation Safety Sign	11-102-A-11	•	•	•	•	•	•	•	•	•	•	•	•	•
Monument Sign	11-102-A-~~9~~6	•	•	•	•	•	•	•	•	•	•	•	•	•
Neighborhood Entry Sign	11-102-A-~~13~~9													
Post Sign, Permanent	11-102-A-~~16~~13	•	•	•	•	•	•	•	•	•	•	•	•	•
Pylon Sign	11-102-A-16	•	•	•	•	•	•	•	•	•	•	•	•	•

Subsection 11-104 E, entitled "Electronic Message Boards"

E. **Electronic Message Boards**. Electronic message boards shall only be allowed as permitted sign types in the C-~~1~~2, I-1, IB and OS Districts and subject to the standards established below.

a. Signs that incorporate electronic message board displays may only be permitted if they are constructed as monument signs with landscaping around the sign base approved by the Village Manager.

b. The use of electronic message boards is permitted, whether with text or graphics, provided that all messaging is static and the message changes are to be instantaneous without scrolling, sweeping, dissolves, or other such animations . The illumination of the electronic message sign shall be automated to dim in conjunction with the ambient lighting at various times of the day.

c. The electronic message board component may comprise no more than 60 percent of the sign's total area.

d. The message shall not flash. The displayed message may be changed by intermittent lighting changes, but such changes shall not exceed six per minute in the I-1, IB and OS Districts, and not to exceed more than two (2) changes per day in the C-1 District.

e. All signs with an electronic display shall comply with the restrictions on hours and intensity of illumination established in Section 11-104-D of this Code.

f. No more than one electronic message board display shall be permitted on any one lot provided, however, that lots in the IB or OS zoning districts that exceed 200 acres in size and have frontage on more than one public street may have up to two electronic message board displays so long as such displays are:

i. Separated by a minimum of 1,000 linear feet; and

ii. Located on separate public street frontages.

g. No electronic message boards shall be located within 1,000 lineal feet of any other sign with an electronic message board~~, and no electronic message board shall be within 350 feet of a dwelling unit~~.

h. Any sign with an electronic message board must satisfy all Illinois Department of Transportation (IDOT) requirements and regulations for outdoor advertising.

i. In addition to the above conditions, any sign with an electronic display that is less than 1,000 lineal feet from any other sign with an electronic message board, or ~~to be~~is located within 250 feet of a principal residential structure shall ~~also~~ require the issuance of a Special Permit pursuant to Section 2-113 of this Code.

Paragraph 11-106 A6, entitled "Illumination"

6. **Illumination.** Internal or external illumination of monument signs is permitted.~~Drive-through signs shall be internally illuminated only.~~

Paragraph 11-106 F5, entitled "Illumination"

5. **Illumination.** Internal or external illumination of monument signs is permitted. ~~Pylon signs shall be internally illuminated only.~~

Subparagraph 11-107 B1(b)i, entitled "Duration of Display"

i. Mounted banner signs shall have a duration of display of a maximum of 30 days with an exception for permitted temporary construction banners not to exceed the duration of construction.

Subparagraph 11-107 B3(a), entitled "Maximum Area"

3. **All Mounted Banner Signs.**

   a. **Maximum Area.**

      ~~i. **Single-Family, Multifamily, and Mixed-Use Districts.**~~

         ~~a) **MFRC, RLC, and VGRC Districts.** Mounted banner signs shall have a maximum area of 25 square feet.~~

         ~~b) **All Other Districts.** Mounted banner signs are not permitted.~~

      ~~ii.~~i. **~~Office, Commercial, Industrial, Institutional, and Open Space Districts.~~** Mounted banner signs shall have a maximum area of 25 square feet.

Subparagraph 11-107 B3 (e), entitled "Location"

   e. **Location**.

      i. Mounted banner signs shall be located on a building wall, meeting the location standards for permanent wall signs (Table 11-102-D).

      ii. Mounted banner signs shall be located on a fence meeting all standards of Section 10-108 with an exclusion for permitted construction fences which may exceed the standards of Section 10-108.

Paragraph 11-108 B4, entitled "Maximum Number of Sign Faces"

4. **Maximum Number of Sign Faces.**

   a. **MFRC, RLC, RS, and VGRC Districts.** Post and panel signs shall have a maximum of one sign face.

   b. **Office, Commercial, Industrial, Institutional, and Open Space Districts.** Post and panel signs shall have a maximum of two sign faces.

Paragraph 11-108 C7, entitled "Duration of Display"

7. **Duration of Display.** The following standards apply unless otherwise required by state law or regulation, such as the Illinois Municipal Code (65 ILCS 5/11-13-1). If the property on which the sign shall be placed is actively marketed for sale or lease the duration of display shall be until the property is no longer actively marketed for sale or lease so long as all maintenance requirements are met (Section 11-110).

EXHIBIT L

Section 14-106, entitled "E Definitions", Subsection 14-107 W, entitled "Fuel Sales", and Subsection 14-117 T, entitled "Public Cultural and Community Facilities" of Article 14 of the Zoning Code, entitled "Definitions" shall be, and is hereby amended as follows (deletions are struck through and additions are shown as underlined):

Section 14-106, entitled "E Definitions"

C. **Electric Vehicle.** A vehicle that operates, either partially or exclusively on electrical energy from a charging station or other electrical energy source that is stored in the vehicle's batter for propulsion purposes.

Subsection 14-107 W, entitled "Fuel Sales"

W. **Fuel Sales.** Any building or portion thereof or premises used for dispensing or offering for sale at retail any automobile fuels or oils; having pumps and storage tanks; also, where battery, tire and other similar services are rendered, but only if rendered wholly within lot lines. Included are solar and/or electric charging stations for Electric Vehicles. Excluded are open sales lots, parking, storing and sale of automobiles or any other commodity not incidental to fuel sales.

Subsection 14-117 T, entitled "Public Cultural and Community Facilities"

T. **Public Cultural and Community Facilities.** A public facility for the development, production, and presentation of the visual and performing arts, including live theater, dance, music, painting, sculpture, ~~and~~ crafts, and community fitness activities.~~.~~

APPROVED

RESOLUTION NO. 26-PC-04

VILLAGE OF NORTHBROOK PLAN COMMISSION
DOCKET NO. PCD-26-03
PROPOSED AMENDMENTS TO THE ZONING CODE AND COMPREHENSIVE PLAN

WHEREAS, an application has been filed by the President and Board of Trustees of the Village of Northbrook (the "Applicant") to consider a series of minor amendments to the following articles of the Village of Northbrook Zoning Code (2025) and Elements of the Comprehensive Plan (2010):

- Article 1: General Provisions
- Article 2: Ordinance Administration and Enforcement
- Article 3: Single-Family District Standards
- Article 4: Multi-Family and Mixed Use District Standards
- Article 5: Office District Standards
- Article 6: Commercial District Standards
- Article 7: Industrial District Standards
- Article 8: Institutional and Open Space District Standards
- Article 9: Overlay District Standards
- Article 10: General Development Standards
- Article 11: Sign Standards
- Article 14: Definitions
- Comprehensive Plan Introduction
- Comprehensive Plan Element One
- Comprehensive Plan Downtown Area Policies

WHEREAS, the Applicant has filed an application (Docket No. PCD-26-03) with the Village of Northbrook requesting the amendments to the current Zoning Code of the Village of Northbrook and Comprehensive Plan; and

WHEREAS, a public notice for this docket was duly published on May 4, 2026 on the *Village of Northbrook Public Notice Webpage* and a public hearing was held at the Plan Commission's regular meetings on May 19, 2026; and

WHEREAS, the Plan Commission has considered all the evidence presented to it, including, but not limited to, the following:

1. Staff reports prepared by the Village of Northbrook Development and Planning Services Department submitted for the May 19, 2026 Plan Commission meeting;
2. Testimony on behalf of the Applicant; and
3. All written and oral testimony concerning the application and the proposed Comprehensive Amendment.

NOW, THEREFORE, BE IT RESOLVED by the Plan Commission of the Village of Northbrook, Cook County, Illinois, THAT:

Resolution No. 26-PC-04
Docket No. PCD-26-03 – Proposed Amendments to the Northbrook Zoning Code & Comprehensive Plan

1. **Findings:** With respect to Docket No. PCD-26-03, the Plan Commission hereby finds that amendments to the current Zoning Code of the Village of Northbrook and Comprehensive Plan **are consistent** and meets the standards in Subsections 2-116 D and 2-117 D of the Northbrook Zoning Code.

2. **Recommendations:** The Northbrook Plan Commission does hereby recommend to the President and Board of Trustees of the Village of Northbrook **approval** of Docket No. PCD-26-03 based on the findings established herein, subject to the following conditions:

   A. Revising the proposed language in the Comprehensive Plan Downtown Area Policies document item DA 3.c to not list specific streets, and state "Provide for streetscape improvements as development occurs in the Village Green Overlay District."

ADOPTED THIS 19th day of May 2026.

AYES: (6) Early, Elisco, Melnick, Morgan, Pipito, Walden

NAYS: (0)

ABSENT: (3) Braiman, Halperin, Karavitis

ABSTAIN: (0)

/s/ Steven Elisco
Steven Elisco, Chairman
Northbrook Plan Commission

ATTEST:
/s/ Amy McEwan
Amy McEwan, Director
Development and Planning Services

Plan Commission Minutes - APPROVED

Sandra "Sandy" Frum Board Room
1225 Cedar Lane Northbrook, IL 60062
Tuesday, May 19, 2026

PLAN COMMISSION

1) Roll Call

Attendee Name	Title	Status
Steven Elisco	Chairman	Present
Jeff Braiman	Commissioner	Absent
Andrea Pipito	Commissioner	Present
Allen Morgen	Commissioner	Present
Jeremy Melnick	Commissioner	Present
Nikos Karavitis	Commissioner	Absent
Keri Halperin	Commissioner	Absent
Jackie Earley	Commissioner	Present
Ken Walden	Commissioner	Present
Michaela Kohlstedt	Deputy Director	Present
Swati Pandey	Senior Planner	Present
Caitlyn Culbertson	Village Attorney	Present

2) Minutes Approval

2.A) Minutes for Approval - April 21, 2026

Commissioner Morgen moved, Commissioner Melnick seconded the motion to approve the regular meeting minutes for April 21, 2026, as amended. On voice vote, all were in favor.

Commissioner Walden abstained.

3) Community Planning Report

Michaela Kohlstedt, Deputy Director, reported that the Village's Building Official retired at the end of April and announced that Jennifer Holtz has been appointed as the new Building Official, noting that she is already excelling in the role. Ms. Kohlstedt then summarized recent actions by the Village Board of Trustees across two past meetings. At its April 28, 2026, meeting, the Board approved the Mariano's gas station proposal previously recommended by the Plan Commission and adopted the new annual fee ordinance to enhance fee transparency, effective June 1, 2026. Conversely, an April 28 preliminary review for a High Five Sports group fitness facility at 3451 Commercial Avenue was not as well received by the Board due to incompatible surrounding industrial and commercial uses and the necessity of a zoning code amendment. At its May 12, 2026, meeting, the Board waived the preliminary review for a Zoning Code and Comprehensive Plan amendment to facilitate discussion at tonight's May 19, 2026, Plan Commission meeting.

Also on May 12, Director of Development and Planning Services Amy McEwan presented on the Statement of Qualification and Proposal (SOQ) process; Ms. Kohlstedt explicitly encouraged the Plan Commission to watch the video of that meeting to review the process. Furthermore, the Board directed the Village Manager and Village Attorney to draft a purchase and sale agreement with the Habitat development company for 1657 Shermer Road—authorized as a mixed-use project consisting of luxury apartments and commercial space—and permitted the Village Manager to sign a letter allowing Habitat to apply for preliminary review.

4) Public Comment Time

5) Public Hearing

5.A) DOCKET NO. PCD-26-01: 608-610 SANDERS ROAD - THREE-LOT SUBDIVISION (Public Hearing Continued to June 16, 2026) - An application filed by M&D Builders, LLC as owner of 608-610 Sanders Road, for the purpose of authorizing the following zoning relief: (A) Voluntary Annexation into the Village of Northbrook; (B) Rezone to R-6 Single Family Residential District; (C) Variation of the Subdivision Code to allow a combined tentative and final plat of subdivision for a three-lot subdivision; (D) Variation of the Subdivision Code to allow detention in an easement rather than an outlot; (E) Waiver of underground installation of public utility facilities per Subdivision Code; and (F) Approval of any other such variations, waivers, and zoning relief as may be necessary.

Commissioner Walden made a motion to continue the public hearing request for this application to the Plan Commission meeting on July 21, 2026; seconded by Commissioner Melnick. On roll call vote, all were in favor. (6 Yes Votes, 0 No Votes)

5.B) DOCKET NO. PCD-26-03: VILLAGE OF NORTHBROOK - AMENDMENTS TO THE ZONING CODE AND THE NORTHBROOK COMPREHENSIVE PLAN (Public Hearing) - An Application by the President and Board of Trustees of the Village of Northbrook to consider amendments to the following articles of the Village of Northbrook Zoning Code: Article 1: General Provisions; Article 2: Ordinance Administration and Enforcement; Article 3: Single-Family District Standards; Article 4: Multi-Family and Mixed Use District Standards; Article 5: Office District Standards; Article 6: Commercial District Standards; Article 7: Industrial District Standards; Article 8: Institutional and Open Space District Standards; Article 9: Overlay District Standards; Article 10: General Development Standards; Article 11: Sign Standards; Article 14: Definitions. The Application also includes minor amendments to the Introduction, Element One, and the Downtown Area Policies of the Northbrook Comprehensive Plan.

Michaela Kohlstedt, Deputy Director, presented an application on behalf of the President and Board of Trustees of the Village of Northbrook, requesting consideration of a series of text amendments to various articles of the Northbrook Zoning Code, alongside minor amendments to the Comprehensive Plan. Ms. Kohlstedt explained that these updates, which were identified by staff over the preceding six months, are intended to correct typographical errors and incorporate language inadvertently omitted during the adoption of the new Zoning Code. After providing a comprehensive overview of the specific revisions proposed for each article and the Comprehensive Plan, she clarified the associated zoning regulations for the Commission.

John Lynk, 942 Whitfield Road, Northbrook, IL, addressed the Plan Commission regarding one of the proposed amendments to the Comprehensive Plan, specifically Item ‘g.’ under ‘Downtown Area Policies’ and requested that it be moved under ‘Overall Community Goals’. Mr. Lynk requested that greater emphasis be placed on this language and recommended that the sentence contained in Item G be relocated from the Downtown Area Policy section to the section entitled Overall Community Goals, which establishes the framework for the plan. He stated that doing so would benefit residents by fostering broader discussion within the community.

Ms. Kohlstedt advised that the community goals had been established in the original Comprehensive Plan and had undergone an extensive vetting process. For that reason, she declined to make such a change at this time, as the addition of a goal constitutes a substantive amendment. She noted that the Commission and the Board may request that the Village modify the existing goals or adopt new goals in the future. She further noted that other portions of the Comprehensive Plan will come before the Commission over time as staff continues to update the plan to align with the new Zoning Code.

Mr. Lynk further commented that the discussion of density within the Economic Development section is misplaced and suggested that the Village identify a more appropriate location within the Comprehensive Plan for that language. He also expressed concern that duplexes and cottage courts may be overlooked during the zoning code review.

Commissioner Morgen made a motion to close the public hearing; seconded by Commissioner Melnick. On roll call vote, all were in favor. (6 Yes Votes, 0 No Votes)

Commissioner Earley expressed support for the use of the term “Downtown Area” in lieu of identifying specific streets when referring to improvements. She further observed that the Village does not have a significant problem with realtors leaving signage in place after a property has been sold and, for that reason, did not support amending the code to add language regulating realtor signage, as no one appears to be abusing the current practice.

Commissioner Melnick made a motion to approve a resolution for Docket No. PCD-26-03, Village of Northbrook - amendments to the Zoning Code and the Northbrook Comprehensive Plan, as prepared and submitted by staff, subject to editing the description of the street names in the Comprehensive Plan to the Village Green Overlay; seconded by Commissioner Morgen. On roll call vote, all were in favor. (6 Yes Votes, 0 No Votes)

6) Review of Draft Resolutions

7) Discussion Topics

7.A) Presentation to Review Updated Metrics and Statistical Information on Downtown Northbrook

Michaela Kohlstedt, Deputy Director, presented an abbreviated video recording of a presentation originally delivered by Amy McEwan, Director of Development and Planning Services, at the April 28, 2026, Village Board meeting regarding the strategic vision of the Downtown Plan. Ms. Kohlstedt noted that this recorded presentation would be published on the Village website to ensure public access and transparency.

Ms. Kohlstedt emphasized that to realistically attract and sustain the desired commercial businesses that residents have expressed interest in seeing in the downtown, the Village must actively increase its residential density and the overall number of residents per square mile in the downtown area. She concluded by explaining the economic reality facing the district: commercial operators and national retailers heavily weigh localized demographic density and immediate rooftop counts when evaluating corporate expansion and determining market viability.

Commissioner Morgen observed that Northbrook’s Downtown is modest in size compared with that of other communities, such as Highland Park, and questioned how increasing housing opportunities would, in turn, attract additional businesses to expand into Northbrook.

Chairman Elisco provided historical context regarding the Village’s long-term planning efforts, highlighting the municipal initiatives of the early 2000s that ultimately culminated in the adoption of the 2012 Downtown Plan. He noted that this foundational plan

explicitly envisioned a vibrant Downtown core driven by higher-density, mixed-use developments that blend residential living with commercial activity. Elaborating on the economic implications of this vision, Chairman Elisco stated that adding 500 to 600 residential housing units to the Downtown area would serve as a critical catalyst for local economic development. He emphasized that residential density is a key metric utilized by major corporations when evaluating market viability and potential return on investment. Consequently, increasing the Downtown residential footprint would fundamentally strengthen Northbrook's competitive position, making the Village a substantially more attractive destination for corporate investment and commercial tenancy.

Commissioner Earley suggested that the Village explore utilizing municipal incentive funding in partnership with private property owners to incentivize them to develop their land to be more aligned to Village goals.

In response to a question raised by the Commission, Ms. Kohlstedt confirmed that while the Village is actively factoring families with children into its long-term planning—including the potential impact on local school district populations—the specific luxury residential projects scheduled for preliminary review at the upcoming May 26, 2026, Village Board meeting are not designed or anticipated to attract families with school-aged children.

Commissioner Pipito discussed the ongoing shortage of smaller single-family homes, specifically ranch homes, noting that many are currently being demolished to make way for larger homes with multiple floors. She suggested that the Village invest in refurbishing existing single-family housing stock, emphasizing that not all senior citizens desire to transition into multi-family residential buildings as they age.

Ms. Kohlstedt acknowledged the ongoing demand for single-family homes within the Village, and reminded the Commission that staff did present the idea of smaller homes in cottage courts and duplexes for those who don’t want to live in larger multi-family buildings, and those housing types were not well received and did not make it into the new Zoning Code for single family residential districts.

Chairman Elisco noted that senior residents within the community had previously expressed strong enthusiasm for the cottage court housing concept, highlighting it as an ideal alternative for down-sizing seniors who wish to remain in Northbrook without transitioning to traditional multi-family buildings. Furthermore, he strongly encouraged members of the Commission to review the recorded presentations and documentation for the 2012 Downtown Plan. He emphasized that the 2012 plan contains exceptional and forward-thinking design concepts that successfully integrate residential and retail spaces. Chairman Elisco explained that revitalizing these concepts is crucial for cultivating a vibrant, pedestrian-friendly downtown, ultimately creating a sustainable live-work environment that benefits both local business owners and residents.

Commissioner Morgen observed that the Downtown area has experienced steady

revitalization and improvement over the years, as evidenced by an increasing number of businesses choosing to locate within the district.

Ms. Kohlstedt advised the Commission that the Downtown area currently maintains ample parking capacity to support existing and proposed developments.

8) Remarks for the Good of the Order

Commissioner Walden encouraged members of the public to attend the forthcoming Art Fair.

9) Adjourn

Commissioner Walden made a motion, seconded by Commissioner Melnick to adjourn. On voice vote, a motion to adjourn passed unanimously. Adjourned at 9:20 p.m.

MEMORANDUM

To: Plan Commission
From: Deputy Director of Development & Planning Services Michaela Kohlstedt
Date: May 5, 2026
Subject: PCD-26-03: Amendments to the Zoning Code and Comprehensive Plan

Requested Action

On May 5, 2026 the Plan Commission will conduct a public hearing on an application filed by the Village President and Board of Trustees of Northbrook to consider a series of amendments to the following articles of the Village of Northbrook Zoning Code addressing typographical errors and inclusion of language that was inadvertently omitted from the new Zoning Code:

- Article 1: General Provisions
- Article 2: Ordinance Administration and Enforcement
- Article 3: Single-Family District Standards
- Article 4: Multi-Family and Mixed Use District Standards
- Article 5: Office District Standards
- Article 6: Commercial District Standards
- Article 7: Industrial District Standards
- Article 8: Institutional and Open Space District Standards
- Article 9: Overlay District Standards
- Article 10: General Development Standards
- Article 11: Sign Standards
- Article 14: Definitions

The Plan Commission will also consider minor amendments to the Introduction, Element One, and Downtown Area Polices of the Northbrook Comprehensive Plan. These minor amendments are part of a Village initiated project of reviewing the Comprehensive Plan to update the outdated demographic and land use data from the original adoption in 2010. In addition, community feedback has been collected as part of the Village Strategic Plan process and staff will make recommendations to closely align the goals of the Comprehensive Plan with the findings in the draft Village Strategic Plan. It should be noted that the Overall Goals of the Comprehensive Plan are very similar in sentiment and preferred action as those found in the draft Strategic Plan. Finaly, staff will adjust the format of the document to be consistent with the Village branding.

Proposed Zoning Code Amendments:

Article 1: General Provisions

This amendment is to include the provisions regarding the Zoning Map and Annexed Land which was unintentionally omitted from the original approval of the new Zoning Code. The proposed language is being carried over in its entirety and complete language as found in the 1988 Zoning Code.

Article 2: Code Administration and Enforcement

- Correcting a typo on page 10;

- clarification of the standards subject to administrative adjustments utilizing the language from the 1988 Zoning Code on page 13; and
- a clarification regarding the parking variation process on page 40.

Article 3: Single-Family Residential District Standards

- Amending Table 3-105-A: Principle Uses, to include Electric Vehicle charging stations with Fuel Sales on page 11;
- amending Table 3-106-A: Allowed Encroachments into Required Yards, to correct typos and provide clarification on pages 15-17;
- amending Table 3-107 A: Accessory Uses, to include Sport Courts as it was unintentionally omitted on page 19;
- correct a typographical error of order on page 24; and
- clarify language for parking trailers, boats, and other vehicles on page 27.

Article 4: Multi-Family Residential and Mixed-Use District Standards

- Amending Table 4-105 A: Principle Uses, to include Townhouse Dwellings as a Permitted use in the Village Green Residential and Commercial (VGRC) District as it was unintentionally omitted on page 13;
- amending Table 4-105 A: Principle Uses, to include Electric Vehicle charging stations with Fuel Sales on page 16;
- amending Table 4-106-A: Allowed Encroachments into Required Yards, to correct typos and provide clarification on pages 31-33; and
- amending Table 4-107 A: Accessory Uses to include Sport Courts as it was unintentionally omitted on page 35.

Article 5: Office District Standards

- Amending Table 5-105-A: Principle Uses, to include Electric Vehicle charging stations with Fuel Sales on page 11;
- amending Table 5-106-A: Allowed Encroachments into Required Yards, to correct typos and provide clarification on pages 25-27;
- amending Table 5-107 A: Accessory Uses, to correct typos on page 28 and add Sport Courts on page 29; and
- correct typos and errors on pages 33-34.

Article 6: Commercial District Standards

- Amending Table 6-105-A: Principle Uses, to include Electric Vehicle charging stations with Fuel Sales on page 12;
- amending Table 6-106-A: Allowed Encroachments into Required Yards, to correct typos and provide clarification on pages 25-27; and
- amending Table 6-107 A: Accessory Uses, to correct typos on page 28 and add Sport Courts on page 28.

Article 7: Industrial District Standards

- Amending Table 7-105-A: Principle Uses, to include Electric Vehicle charging stations with Fuel Sales on page 9;
- amending Table 7-106-A: Allowed Encroachments into Required Yards, to correct typos and provide clarification on pages 22-24;
- amending Table 7-107 A: Accessory Uses, to correct typos on page 28 and add Sport Courts on page 26;
- amending 7-107-B.3 to include item “g” on page 29 consisting of the following language which was unintentionally omitted in the new code, but existed in the 1988 Zoning Code:

  ***Accessory Sale of Merchandise Indoors**. When located indoors in a property, the square footage area of the accessory retail sales shall not exceed 10% of the floor area of the*

building, or 1,000 square feet, whichever is less.

Article 8: Institutional and Open Space District Standards

- Amending Table 8-105-A: Principle Uses, to include Electric Vehicle charging stations with Fuel Sales on page 11;
- amending Table 8-106-A: Allowed Encroachments into Required Yards, to correct typos and provide clarification on pages 21-23; and
- amending Table 8-107 A: Accessory Uses, to correct typos on page 28 and add Sport Courts on page 24.

Article 9: Overlay District Standards

- Amending Table 9-105-A: Principle Uses, to include Electric Vehicle charging stations with Fuel Sales on page 8.

Article 10: General Development Standards

- Clarifying language stating when a parking variation is possible versus a special permit for parking reduction on page 10;
- amending Table 10-106 G(3)(c) to correct typos on page 38; and
- amending Table 10-108-B-2 to correct typos and provide language that was unintentionally omitted in the new code pertaining to fences on lots on major thoroughfares, as well as fence height on residential properties adjacent to industrial properties which was also unintentionally omitted on pages 46-48.

Article 11: Sign Standards

- Correct typos in Table 11-102-D on page 6;
- Correct typos on page 9;
- Provide clarification on page 10;
- Modify illumination standards for drive-through signage to include both external and internal illumination choices on page 15;
- Modify illumination standards for pylon signs to include both internal or external illumination on page 22;
- Amendment to the duration of temporary banners pertaining to construction signage to allow for the temporary banner to remain through the duration of construction;
- Clarify language for all temporary mounted banner signs for maximum area which is consistent across all districts on pages 25-26; and
- Add the RS District to the list of regulating districts for post and panel signs on page 30;
- Clarify language to temporary post sign display duration for properties marketed for sale or for lease on page 32.

Article 14: Definitions

- Amending the definition of Public Cultural and Community Facilities to include the community fitness component of such uses.

There are no amendments proposed that will change the original intent of the recently adopted Zoning Code, and it is staff's goal that the proposed amendments recommended in this report capture any language that was unintentionally omitted in the drafting of the new Zoning Code with consideration made to the previous 1988 Zoning Code.

Proposed Comprehensive Plan Amendments

The Comprehensive Plan for Northbrook, titled A Plan for Northbrook, was originally adopted on December 14, 2010 with several minor amendments over the last fifteen years. Majority of the amendments to the

Comprehensive Plan were to the Future Land Use Map to modify parcel designations as land was developed over the last fifteen years. The plan was amended in December of 2020 to provide language which would be consistent with the affordable housing ordinance.

To date, the Village has not performed an overall review of the document in its entirety to update data and tables which consist of information typically updated every five to ten years. The population graphs, and depictions of vacant and available land for potential redevelopment have changed over time and merit updating. Along the lines of growth and progress in the community, the Village also adopted a new branding policy consisting of a new logo and color palette in 2023.

Lastly, the Village conducted a community wide survey and has drafted its first Village Strategic Plan. During the development of the Strategic Plan, the Village heard from numerous residents and business owners regarding insights into the future of Northbrook. Based upon the draft Strategic Plan, several minor amendments have been proposed to the Comprehensive Plan to be consistent with the Village Strategic Plan.

All three sections proposed to be updated include format changes indicative of utilizing the current Village branding standards.

The proposed modifications to the ***Introduction*** includes:

- Correct typos to indicate location of diagram, and further clarifying language on page 2;
- Inclusion of an updated graph depicting the Northbrook population over time on page 3;
- An updated map depicting Existing Vacant and Potential Redevelopment Sites in Northbrook as of May 1, 2206 on page 4; and
- An updated diagram utilizing the Village branding colors on page 6.

The proposed modifications to ***Element One: Overall Community Goals*** includes:

- Added language to Overall Goal 1 to align with language used in a similar goal found in the draft Strategic Plan.

It should be noted that the Overall Goals of the Comprehensive Plan are very similar in sentiment and preferred action as those found in the draft Strategic Plan which is why there were no further amendments proposed to this article.

The proposed modifications to the Downtown Area Policies (found in a portion of Element 9) includes:

- Clarifying language to existing goals to better align with what the draft Strategic Plan included; and
- Additional goals and action items, that can be included in response to the draft Strategic Plan.

Included with the proposed amendment documents for consideration is a draft resolution recommending approval of the proposed amendments as presented should the Plan Commission wish to make a recommendation following the public hearing. The draft resolution can be amended on the floor if the Commission finds it necessary to propose any additional language modifications.

APPROVED

RESOLUTION NO. 26-PC-06

VILLAGE OF NORTHBROOK PLAN COMMISSION
DOCKET NO. PCD-26-03
PROPOSED AMENDMENTS TO THE ZONING CODE

WHEREAS, an application has been filed by the President and Board of Trustees of the Village of Northbrook (the "Applicant") to consider an amendment to Table 10-108-B-2(a) of Article 10 General Development Standards of the Village of Northbrook Zoning Code (2025);

WHEREAS, the Applicant has filed an application (Docket No. PCD-26-03) with the Village of Northbrook requesting the amendment to the current Zoning Code of the Village of Northbrook and Comprehensive Plan; and

WHEREAS, a public notice for this docket was duly published on May 29, 2026 on the *Village of Northbrook Public Notice Webpage* and a public hearing was held at the Plan Commission's regular meetings on June 16, 2026; and

WHEREAS, the Plan Commission has considered all the evidence presented to it, including, but not limited to, the following:

1. Staff reports prepared by the Village of Northbrook Development and Planning Services Department submitted for the June 16, 2026 Plan Commission meeting;
2. Testimony on behalf of the Applicant; and
3. All written and oral testimony concerning the application and the proposed Comprehensive Amendment.

NOW, THEREFORE, BE IT RESOLVED by the Plan Commission of the Village of Northbrook, Cook County, Illinois, THAT:

1. **Findings:** With respect to Docket No. PCD-26-03, the Plan Commission hereby finds that amendment to the current Zoning Code of the Village of Northbrook **is consistent** and meets the standards in Article 2-117.D. of the Northbrook Zoning Code.

2. **Recommendations:** The Northbrook Plan Commission does hereby recommend to the President and Board of Trustees of the Village of Northbrook **approval** of Docket No. PCD-26-03 based on the findings established herein.

ADOPTED THIS 16th day of June 2026.

AYES: (9) Braiman, Earley, Halperin, Karavitis, Melnick, Morgen, Pipito, Walden, Elisco

NAYS: (0)

ABSENT: (0)

ABSTAIN: (0)

__/s/ Steven Elisco _____
Steven Elisco, Chairman
Northbrook Plan Commission

ATTEST:

_____/s/ Amy McEwan _____
Amy McEwan, Director
Development and Planning Services

MEMORANDUM

To: Plan Commission
From: Deputy Director of Development & Planning Services Michaela Kohlstedt
Date: June 16, 2026
Subject: PCD-26-03: Amendments to the Zoning Code and Comprehensive Plan

Requested Action

On June 16, 2026 the Plan Commission will conduct a public hearing on an application filed by the Village President and Board of Trustees of Northbrook to consider an amendment to Article 10 General Development Standards of the Village of Northbrook Zoning Code addressing a typographical error and inclusion of language that was inadvertently omitted from Table 10-108-B-2(a) of the Zoning Code.

This amendment was not included in the series of amendments presented previously on May 19, 2026 for consideration. Following consideration by the Plan Commission, the item will be included with the May 19 recommendation of approval for amendments to the Zoning Code for Board of Trustees consideration.

Proposed Zoning Code Amendment:

In the prior Zoning Code, language was included that allowed corner side yard lots abutting another corner side yard to have a greater fence height. The language excerpt from the previous Zoning Code is shown below highlighted. That language was inadvertently omitted from the recently adopted Zoning Code.

Location	Maximum Height of Fence
Single Family Residential Districts:	
Front and corner side yards, except as provided below:	3 feet
That particular yard of a through lot that abuts any of the following streets (unless said yard is adjacent to the front yard of a lot other than a through lot): Willow, Sanders, Waukegan, Dundee, Walters west of Crestwood, Landwehr, Pfingsten, Techny, Voltz, Grant and Sunset Ridge	6 feet
The corner side yard of a lot immediately adjacent to and abutting another lot with a corner side yard	6 feet
All other yards when abutting a residential use	6 feet
All other yards when abutting a nonresidential use	8 feet

The highlighted area below is the proposed amendment for consideration to include the exact language from the prior Zoning Code.

Table 10-108-AB-2(a) Maximum Fence and Wall Height						
Property Line	**District**					
	R-1, R-2 Districts	*R-3, R-4, R-5 Districts*	*R-6, R-7, R-8, RS, MFRC, RLC, VGRC Districts*	*O-1, O-2, O-3, O-4, C-2, C-3, C-4, C-5 Districts*	*ICS, I-1, I-2 Districts*	*I-B, OS Districts*
Front [1]	5 feet [~~23~~]	4 feet	4 feet	prohibited	6 feet ~~[3]~~	6 feet [4]
Corner Side [~~1~~2]	5 feet [~~23~~]	4 feet	4 feet	prohibited	6 feet ~~[3]~~	6 feet [4]
Interior Side	6 feet [4]	6 feet [4]	6 feet	8 feet	8 feet	8 feet ~~[3]~~ [4]
Rear	6 feet [4][5]	6 feet [4] [5]	6 feet [5]	8 feet	8 feet	8 feet ~~[3]~~ [4]
Notes						
[1] Through lot fences on Willow, Sanders, Waukegan, Dundee, Walters (west of Crestwood), Landwehr, Pfingsten, Techny, Voltz, Grant, or Sunset Ridge may have a height up to 6 feet.						
[~~1~~2] ~~If facing the front yard of a residential lot(s) across the street, front yard standards shall apply.~~The corner side yard of a lot immediately adjacent to and abutting another lot with a corner side yard may have a height up to 6 feet.						
[~~23~~] Driveway gates installed within the fence may be up to 8 feet in height.						
~~[3] Fence or wall shall be setback a minimum of five feet from the property line and materials shall be restricted to architectural block, masonry, stone, or stucco on masonry only.~~						
[4] The Village Manager may approve, as an Administrative Adjustment (Section 2-104) an increase in fence height up to 12 feet to accommodate outdoor recreation areas. Sport courts with a 12 foot fence shall be set back a minimum of 10 feet from all lot lines.						
[5] Residential zoned properties adjacent to non-residential zoned properties shall be permitted a fence height up to 8 feet in rear yards.						

The above highlighted language is the only amendment being considered in this public notice as all other tracked edits already underwent a public hearing process on May 19 whereupon the Plan Commission found the proposed amendments appropriate and recommended approval.

Included with the proposed amendment documents for consideration is a draft resolution recommending approval of the proposed amendment as presented should the Plan Commission wish to make a recommendation following the public hearing. If the Commission should vote on the draft resolution, it would be **Resolution No. 26-PC-06** recommending approval of Docket No. PCD-26-03.

JULY 14, 2026

PCD-26-03: Zoning Code & Comprehensive Plan Amendments

Village of Northbrook

125

PROPOSED ZONING CODE AMENDMENTS

NORTHBROOK ZONING CODE

PROPOSED AMENDMENTS – Article 1: General Provisions

5. **Zoning Map.**

a. Map Incorporated. The location and boundaries of the zoning districts established by this Code are as shown on a map entitled "Zoning Map of the Village of Northbrook, Illinois," hereafter referred to as the Zoning Map, which is by this reference incorporated as part of this Code. All notations, references and other information shown on the Zoning Map, and all amendments thereto, shall be as much a part of this Code as if specifically set forth and literally described herein.

b. Omitted Land. It is the intent of this Code that the entire area of the Village, including all land and water areas, be included in the districts established by this Code. Any area lying within the Village but not shown on the Zoning Map as being included in such a district shall be deemed to be, and it is hereby, classified in the R-1 Single Family Residential District.

c. District Boundaries. In the event that any uncertainty exists with respect to the intended boundaries of the various districts as shown on the Zoning Map, the following rules shall apply:

i. The district boundaries are the center lines of tollways, expressways, highways, streets, alleys, waterways, railroads and other rights-of-way unless otherwise indicated. Where designation of a boundary line on the Zoning Map coincides with the location of any such right-of-way, the center line of such right-of-way shall be construed to be the boundary of such district.

ii. Where a district boundary does not coincide with the location of any right-of-way but does coincide with a lot line, such lot line shall be construed to be the boundary of such district.

iii. Where a district boundary does not coincide with the location of any right-of-way or lot line, the district boundary shall be determined by the use of the scale shown on the Zoning Map.

iv. The exact location of the district boundaries of the Flood Hazard Overlay District shall be determined as provided in Section 8-205 of this Code.

6. **Annexed Land.**

a. Annexation of Fully Developed Land. All land which shall, after the effective date of this Code, be annexed to the Village and which shall, on the date of such annexation, be fully developed and have no area sufficient for the creation of a developable zoning lot shall upon such annexation be automatically classified into the Village Zoning District that is, in the opinion of the Board of Trustees, most compatible with the development existing on and around such land.

b. Annexation of Undeveloped or Partially Developed Land. All land which, after the effective date of this Code, shall be annexed to the Village and which, on the date of such annexation, shall be undeveloped or partially developed and have sufficient area for the creation of a developable zoning lot, shall upon such annexation be automatically classified in the R-1 Single Family Residential District.

~~d.~~c. Application for Different Classification. When any land is classified pursuant to this Section, it shall remain so classified unless and until an application to amend such classification is filed and granted pursuant to Article 2 of this Code, which application may, however, be filed prior to or contemporaneously with the annexation of the land in question.

NORTHBROOK ZONING CODE

PROPOSED AMENDMENTS – Article 2: Ordinance Administration and Enforcement

2. **Pre-Application Meeting**.

   a. The purpose of a pre-application meeting is to provide an opportunity for the applicant and Village staff to review applicable submittal requirements, procedures, and schedules and discuss development requirements.

   b. A pre-application meeting is required for all application types unless waived by the Village Manager ~~of Development and Planning Services~~.

Paragraph 2-114 B1 entitled "Prohibited Variances":

1. **Prohibited Variances**.

   a. In no event shall a Variance be considered which would allow the establishment of a use which is not otherwise allowed in a district, or which would change the district classification or the district boundary of the property in question.

   b. No parking variance shall be considered in excess of 25%; for such request a special permit shall be requested pursuant to Section 10-102-F-3(b)

   ~~b.~~c. No Variance shall be considered that is intended as a temporary measure only.

   ~~c.~~d. No Variances of the Flood Hazard Overlay District regulations shall be considered.

1. **Standards Subject to General Review Criteria**.

   a. Section 3-106-A: Single-Family District dimensional standards less than 1' for a front and corner side setback, side setback, and less than 5' for a rear setback; and dimensional standards encroachments: allowed encroachments into required yard,

   b. Section 4-106-A: Multi-Family and Mixed-use District dimensional standards less than 1' for a front and corner side setback, side setback, and less than 5' for a rear setback; and dimensional standards encroachments: allowed encroachments into required yard setbacks,

   c. Section 5-106-A: Office District dimensional standards less than 1' for a front and corner side setback, side setback, and less than 5' for a rear setback; and dimensional standards encroachments: allowed encroachments into required yard setbacks,

   d. Section 6-106-A: Commercial District dimensional standards less than 1' for a front and corner side setback, side setback, and less than 5' for a rear setback; and dimensional standards encroachments: allowed encroachments into required yard setbacks,

   e. Section 7-106-A: Industrial District dimensional standards less than 1' for a front and corner side setback, side setback, and less than 5' for a rear setback; and dimensional standards encroachments: allowed encroachments into required yard setbacks,

   f. Section 8-106-A: Institutional and Open Space District dimensional standards less than 1' for a front and corner side setback, side setback, and less than 5' for a rear setback; and dimensional standards encroachments: allowed encroachments into required yard setbacks,

NORTHBROOK ZONING CODE
PROPOSED AMENDMENTS – MULTIPLE DISTRICTS

Use	Additional Regulation	R-1	R-2	R-3	R-4	R-5
Commercial Kitchen						
Contractor Facility						
Crematorium						
Dry Cleaning Facility, Processing On-Site						
Building Material, Machinery, and Equipment Sales or Storage						
Fuel Sales (inclusive of EV charging stations)						
Industry, Heavy						

Table 3-107-A: Accessory Uses by Single-Family Residential District

Use	Additional Regulation	R-1	R-2	R-3	R-4	R-5
Solar Energy Collection System, Canopy Mounted	3-107-B-4	P	P	P	P	P
Solar Energy Collection System, Ground Mounted	3-107-B-5	P	P	P	P	P
Solar Energy Collection System, Roof Mounted	3-107-B-6	P	P	P	P	P
Sport Court	3-107-B-7	P	P	P	P	P

NORTHBROOK ZONING CODE

PROPOSED AMENDMENTS – MULTIPLE DISTRICTS

Encroachment Type	Allowed Location	Limitations of Encroachment
Accessibility Ramps and Fire Escapes required by the Illinois State Building Code	any required yard	Shall be a minimum of five feet from the property line unless otherwise approved by the Village Manager as an Administrative Modifications per Section 2-104.
Air Conditioning Units, Heat Pumps, Generators, and similar equipment	rear and interior side yard	Shall be a minimum of five feet from any lot line.
Antennae	rear and interior side yard	Shall be a minimum of three feet from any lot line.
Basketball equipment	any required yard	A maximum of one per front yard shall be allowed. Shall be a minimum of five feet from side and rear lot lines and ten feet from a front lot line.
Bay Windows and Balconies	front and corner side yard	Shall extend no more than three feet from the applicable elevation of the building and at least five feet from the property line. May not have any foundation or footing and may only project from a façade.
	interior side and rear yard	Shall be a ~~minimum~~ maximum of three feet from the applicable building elevation. May not have any foundation or footing and may only project from a façade.
Driveways and Walkways	any required yard	• Shall comply with the standards of Section 10-102-C. • Shall be a minimum of two feet from the interior side property line.
Fences, Walls, and Berms	any required yard	Shall comply with the standards of Section 10-108.
Flagpoles	any required yard	Shall be a minimum of five feet from the property line.
Uncovered and Unenclosed Steps and Stairs	front ~~and~~, corner side, and rear yard	May encroach up to six feet from the applicable elevation of the building and no closer than five feet to the property line, whichever is greater.
Uncovered Decks, Patios, Stoops and similar Features	front, interior, and corner side yard	• May encroach up to five feet into a required yard and no closer than five feet to the property line, whichever is less. • May not exceed 30 inches in height above the average finished grade.
	rear and side yard	• Shall be a minimum of five feet from the property line. • May not exceed 30 inches in height above the average finished grade.

NORTHBROOK ZONING CODE

PROPOSED AMENDMENTS – Article 3: Single Family

Paragraph 3-107 B, entitled "Accessory Use Supplemental Standards"

7. **Sport Court.** Outdoor Sport Court accessory to any dwelling located in any single family residential district shall be screened by a perimeter landscaped open space equal in width to the applicable required yard or ten (10) feet, whichever is less, and consisting of an opaque fence, wall or densely planted evergreen hedge of not less than five (5) feet in height. Such screening shall be provided on all sides of such facility visible from any abutting property or any public or private street.

Paragraph 3-108 B3, entitled "Parking of Trailers, Boats, and Other Vehicles."

3. **Parking of Trailers, Boats, and Other Vehicles.** Trailers, boats, and other vehicles ~~shall not be parked in the front yard or corner side yard.~~ shall not be connected to utilities, occupied, or located in front of a principal structure within these districts.

NORTHBROOK ZONING CODE
PROPOSED AMENDMENTS – Article 4: Multi-Family

Table 4-103 D, entitled "VGRC District Dimensional Standards"

Table 4-103-D VGRC District Dimensional Standards				
1 = Single-Family Detached		*3 = Townhouse;*		
2 = Multi-Unit Building, All Units;		*4 = All Other Uses*		
	1	*2*	*3*	*4*
Lot Standards				
Lot Area, Minimum (sq ft)	25,000	25,000	25,000	25,000
Lot Width, Minimum (ft)	40	18	100	40
Yard Setbacks				
Front, Minimum (ft)	20	10	25	10
Corner Side, Minimum (ft)	20	10	12	10
Interior Side, Minimum (ft)	5	5	12	5
Rear, Minimum (ft)	20	15	20	15
Building Standards				
Height, Maximum (ft)	30	45	45	45 [1]
Height, Maximum (stories)	2	4	4	4
Lot Coverage (%)	60	80	75	N/A
Note				
[1] A Planned Development may, by right, be constructed to a maximum height of ~~64~~ 65 feet or 5 stories, whichever is less.				

Subparagraph 4-104 E1(b), entitled "Allowance"

1. **Allowance.**
   a. Principal uses are allowed by district as established in Table 4-105-A Principal Uses.
   b. A parcel may contain one or more principal uses or principal buildings in the RS, MFRC, RLC, and VGRC Districts only. The establishment of multiple principal uses or principal buildings on a parcel shall require a Special Permit as specified in Section 2-~~112~~113.
   c. A development with multiple principal uses shall include only those principal uses designated in Table 4-105-A Principal Uses as allowed in the applicable zoning district, and each principal use shall be subject to all applicable supplemental standards.

Table 4-105-A: Principal Uses by Multi-Family Residential District

Use	Additional Regulation	R-6	R-7	R-8	RS	MFRC	RLC	VGRC
Residential Uses	Additional Regulation	R-6	R-7	R-8	RS	MFRC	RLC	VGRC
Community Residences (up to 8 residents)	4-105-B-1	P	P	P	P			P
Dwelling, Cottage Court	4-105-B-2	P	P	P	P	P	P	
Dwelling, Duplex	4-105-B-3	P	P	P	P		P	
Dwelling, Single-Family Detached		P	P	P	P		P	
Dwelling, Townhouse	4-105-B-4	P	P	P	P	P	P	P
Dwelling, Triplex/Quadplex	4-105-B-5	P	P	P	P	P	P	

NORTHBROOK ZONING CODE

PROPOSED AMENDMENTS – Article 5: Office

Table 5-107-A: Accessory Uses by Office District					
Use	Additional Regulation	O-1	O-2	O-3	O-4
Accessory Dwelling Unit (ADU), Attached					
Accessory Dwelling Unit (ADU), Detached					
Accessory Structure	5-107-B-1	P	P	P	P
ATM		P	P	P	P
Day Care Nursery		P			
Drive-Through Facility	5-107-B-2		P	P	P
Electric Vehicle Charging Station – Commercial	5-107-B-3	P	P	P	P
Garden		P	P	P	P
Home Based Daycare					
Home Occupation					
Outdoor Display - Permanent	~~5-107-B-4~~				
Sale of Merchandise – Permanent	~~5-107-B-4~~				

Paragraph 5-107 B4, entitled "Outdoor Display/Sale of Merchandise/Outdoor Seating for Eating and Drinking Uses."

4. ~~Outdoor Display / Sale of Merchandise /~~ **Outdoor Seating for Eating and Drinking Uses.**

   a. **Principal Use**. Outdoor seating~~/display~~ shall be allowed accessory to a legally conforming principal use only.

   b. **Location**. Accessory outdoor seating~~/display~~ areas may be located:

      i. On a public sidewalk directly in front of the principal use to which the outdoor seating is accessory so long as:

         a) A clear pathway at least five feet wide is maintained to allow through public pedestrian traffic along the sidewalk and from the sidewalk into the entrance to the establishment. A greater width may be required by the Village Manager to ensure the safe and convenient flow of pedestrian traffic, and

         b) A clear separation of at least five feet is maintained from any alley, crosswalk, fire hydrant, or similar public or emergency access feature in or near the sidewalk. A greater clear distance may be required by the Village Manager to ensure use of the public or emergency access features.

      ii. In a parking lot so long as:

         a) No more than 10 percent of the required parking spaces (per Section 10-102-D) are utilized,

         b) The outdoor seating~~/display~~ area is directly accessible from inside the principal use to which it is accessory, and

         c) The outdoor seating~~/display~~ area is surrounded by a barrier with a minimum height of three feet and maximum height of four feet.

NORTHBROOK ZONING CODE
PROPOSED AMENDMENTS – Article 7: Industrial

Paragraph 7-107 B3, entitled "Outdoor Display/Sale of Merchandise/Outdoor Seating for Eating and Drinking Uses"

f. **License Required.** When located on public property a license agreement shall be obtained from the Village for proof of liability insurance and recorded with Cook County.

~~f.~~g. **Accessory Sale of Merchandise Indoors.** When located indoors in a property, the square footage area of the accessory retail sales shall not exceed 10% of the floor area of the building, or 1,000 square feet, whichever is less.

NORTHBROOK ZONING CODE

PROPOSED AMENDMENTS – Article 10: General Development Standards

Subsection 10-102 D, entitled "Vehicle Parking Amount."

D. **Vehicle Parking Amount**. Table 10-102-D establishes the minimum number of required vehicle parking spaces per use. The maximum number of vehicle parking spaces allowed per use shall be 10 percent in excess of the minimum requirement.

Electric Vehicle charging stations may be located in required off-street parking spaces and may be counted toward satisfying minimum off-street parking space requirements.

Table 10-102-D, entitled "Minimum Vehicle Parking Requirements"

Table 10-102-D: Minimum Vehicle Parking Requirements	
Use	Minimum Parking Requirement
Car Wash	1 / 250 sq ft
Commercial Kitchen	1 / 1,000 sq ft
Contractor Shop	
Crematorium	
Dry Cleaner, Processing On Site	
Fuel Sales (inclusive of Electric Vehicle charging stations)	1 / 250 sq ft

Paragraph 10-102 F3, entitled "Reduction of Required Number of Parking Spaces in Excess of Allowable Parking Variation."

3. **Reduction of Required Number of Parking Spaces ~~in Excess of Allowable Parking Variation~~.**

a. **Reduction Allowed by Variation**. A parking reduction up to 25% of the required parking may, by Variation grated pursuant to Section 2-114 of this Code, be granted.

~~a.~~b. **Reduction ~~Authorized~~Allowed by Special Permit**. Notwithstanding any other provision of this Section, the Board of Trustees may, by Special Permit granted pursuant to Section 2-~~112~~-113 of this Code, reduce the total number of off-street parking spaces required pursuant to Subsection 10-102-D of this Section in excess of the allowable 25% parking variation (Section 10-102-F-3(a)).

Table 10-106-G3(c), entitled "Transition Landscape Area Type C Requirements"

Table 10-106-G(3)(c). Transition Landscape Area Type C Requirements			
Specification		Option 1	Option 2
a.	Minimum Width [1]	20 feet	15 feet
b.	Fence/Wall [2]	optional	required
c.	Berm [3]	optional	optional
Minimum Number of Landscape Elements per 100 Linear Feet of Landscape Area Length			
d.	Evergreen Tree	3 ~~[4]~~	3 ~~[4]~~
e.	Canopy Tree	2	2
f.	Understory Tree	1	0
g.	Shrubs/Native Grasses	36	20
Notes			
[1] Required yard setbacks may be utilized for perimeter buffer landscape.			
[2] Fences/walls shall meet the standards established in Section 10-108.			
[3] Berms shall meet the standards of Section 10-108 and shall be installed, excluding the planting of required landscape material, at the time of site grading and prior to the commencement of any construction activity.			

NORTHBROOK ZONING CODE

PROPOSED AMENDMENTS – Article 10: General Development Standards

Table 10-108-B2(a), entitled "Maximum Fence and Wall Height"

Table 10-108-AB-2(a) Maximum Fence and Wall Height						
Property Line	**District**					
	R-1, R-2 Districts	*R-3, R-4, R-5 Districts*	*R-6, R-7, R-8, RS, MFRC, RLC, VGRC Districts*	*O-1, O-2, O-3, O-4, C-2, C-3, C-4, C-5 Districts*	*ICS, I-1, I-2 Districts*	*I-B, OS Districts*
Front [1]	5 feet [~~23~~]	4 feet	4 feet	prohibited	6 feet ~~[3]~~	6 feet [4]
Corner Side [~~1~~2]	5 feet [~~23~~]	4 feet	4 feet	prohibited	6 feet ~~[3]~~	6 feet [4]
Interior Side	6 feet [4]	6 feet [4]	6 feet	8 feet	8 feet	8 feet ~~[3]~~ [4]
Rear	6 feet [4][5]	6 feet [4] [5]	6 feet [5]	8 feet	8 feet	8 feet ~~[3]~~ [4]
Notes						
[1] Through lot fences on Willow, Sanders, Waukegan, Dundee, Walters (west of Crestwood), Landwehr, Pfingsten, Techny, Voltz, Grant, or Sunset Ridge may have a height up to 6 feet.						
[~~1~~2] ~~If facing the front yard of a residential lot(s) across the street, front yard standards shall apply.~~The corner side yard of a lot immediately adjacent to and abutting another lot with a corner side yard may have a height up to 6 feet.						
[~~2~~3] Driveway gates installed within the fence may be up to 8 feet in height.						
~~[3] Fence or wall shall be setback a minimum of five feet from the property line and materials shall be restricted to architectural block, masonry, stone, or stucco on masonry only.~~						
[4] The Village Manager may approve, as an Administrative Adjustment (Section 2-104) an increase in fence height up to 12 feet to accommodate outdoor recreation areas. Sport courts with a 12 foot fence shall be set back a minimum of 10 feet from all lot lines.						
[5] Residential zoned properties adjacent to non-residential zoned properties shall be permitted a fence height up to 8 feet in rear yards.						

NORTHBROOK ZONING CODE

PROPOSED AMENDMENTS – Article 11: Signs

Table 11-102-D, entitled "Allowed Sign Types per Office, Commercial, Industrial, Institutional, and Open Space Districts"

Table 11-102-D: Allowed Sign Types per Office, Commercial, Industrial, and Institutional District

Key: • = Sign Allowed, Permit Required; ○ = Sign Allowed, No Permit Required Blank = Sign Prohibited	References	O-1	O-2	O-3	O-4	C-2	C-3	C-4	C-5	IQS	I-1	I-2	IB	OS
Permanent Building Sign Standards														
Awning Sign	11-102-A-1	•	•	•	•	•	•	•	•	•	•	•	•	•
Projecting Sign	11-102-A-15	•	•	•	•	•	•	•	•	•	•	•	•	
Wall Sign	11-102-A-22	•	•	•	•	•	•	•	•	•	•	•	•	•
Window Sign, Permanent	11-102-A-23	•	•	•	•	•	•	•	•	•	•	•	•	•
Permanent Ground Sign Standards														
Drive-Through Sign	11-102-A-3		•	•	•	•	•	•	•					
On-Site Circulation Safety Sign	11-102-A-11	•	•	•	•	•	•	•	•	•	•	•	•	•
Monument Sign	11-102-A-~~9~~6	•	•	•	•	•	•	•	•	•	•	•	•	•
Neighborhood Entry Sign	11-102-A-~~13~~9													
Post Sign, Permanent	11-102-A-~~16~~13	•	•	•	•	•	•	•	•	•	•	•	•	•
Pylon Sign	11-102-A-16	•	•	•	•	•	•	•	•	•	•	•	•	•

Subsection 11-104 E, entitled "Electronic Message Boards"

E. **Electronic Message Boards**. Electronic message boards shall only be allowed as permitted sign types in the C-~~1~~2, I-1, IB and OS Districts and subject to the standards established below.

g. No electronic message boards shall be located within 1,000 lineal feet of any other sign with an electronic message board~~, and no electronic message board shall be within 350 feet of a dwelling unit~~.

h. Any sign with an electronic message board must satisfy all Illinois Department of Transportation (IDOT) requirements and regulations for outdoor advertising.

i. In addition to the above conditions, any sign with an electronic display that is less than 1,000 lineal feet from any other sign with an electronic message board, or ~~to be~~is located within 250 feet of a principal residential structure shall ~~also~~ require the issuance of a Special Permit pursuant to Section 2-113 of this Code.

NORTHBROOK ZONING CODE
PROPOSED AMENDMENTS – Article 11: Signs

Paragraph 11-106 A6, entitled "Illumination"

6. **Illumination.** Internal or external illumination of monument signs is permitted. ~~Drive-through signs shall be internally illuminated only.~~

Paragraph 11-108 B4, entitled "Maximum Number of Sign Faces"

4. **Maximum Number of Sign Faces.**
   a. **MFRC, RLC, RS, and VGRC Districts.** Post and panel signs shall have a maximum of one sign face.
   b. **Office, Commercial, Industrial, Institutional, and Open Space Districts.** Post and panel signs shall have a maximum of two sign faces.

Paragraph 11-108 C7, entitled "Duration of Display"

7. **Duration of Display.** The following standards apply unless otherwise required by state law or regulation, such as the Illinois Municipal Code (65 ILCS 5/11-13-1). If the property on which the sign shall be placed is actively marketed for sale or lease the duration of display shall be until the property is no longer actively marketed for sale or lease so long as all maintenance requirements are met (Section 11-110).

Paragraph 11-106 F5, entitled "Illumination"

5. **Illumination.** Internal or external illumination of monument signs is permitted. ~~Pylon signs shall be internally illuminated only.~~

Subparagraph 11-107 B1(b)i, entitled "Duration of Display"

i. Mounted banner signs shall have a duration of display of a maximum of 30 days with an exception for permitted temporary construction banners not to exceed the duration of construction.

Subparagraph 11-107 B3(a), entitled "Maximum Area"

3. **All Mounted Banner Signs.**
   a. **Maximum Area.**
      ~~i. **Single-Family, Multifamily, and Mixed-Use Districts.**~~
         ~~a) **MFRC, RLC, and VGRC Districts.** Mounted banner signs shall have a maximum area of 25 square feet.~~
         ~~b) **All Other Districts.** Mounted banner signs are not permitted.~~
      ii.i. ~~**Office, Commercial, Industrial, Institutional, and Open Space Districts.**~~ Mounted banner signs shall have a maximum area of 25 square feet.

Subparagraph 11-107 B3 (e), entitled "Location"

e. **Location.**
   i. Mounted banner signs shall be located on a building wall, meeting the location standards for permanent wall signs (Table 11-102-D).
   ii. Mounted banner signs shall be located on a fence meeting all standards of Section 10-108 with an exclusion for permitted construction fences which may exceed the standards of Section 10-108.

NORTHBROOK ZONING CODE
PROPOSED AMENDMENTS – Article 14: Definitions

Section 14-106, entitled "E Definitions"

C. **Electric Vehicle.** A vehicle that operates, either partially or exclusively on electrical energy from a charging station or other electrical energy source that is stored in the vehicle's batter for propulsion purposes.

Subsection 14-107 W, entitled "Fuel Sales"

W. **Fuel Sales.** Any building or portion thereof or premises used for dispensing or offering for sale at retail any automobile fuels or oils; having pumps and storage tanks; also, where battery, tire and other similar services are rendered, but only if rendered wholly within lot lines. Included are solar and/or electric charging stations for Electric Vehicles. Excluded are open sales lots, parking, storing and sale of automobiles or any other commodity not incidental to fuel sales.

Subsection 14-117 T, entitled "Public Cultural and Community Facilities"

T. **Public Cultural and Community Facilities.** A public facility for the development, production, and presentation of the visual and performing arts, including live theater, dance, music, painting, sculpture, ~~and~~ crafts, and community fitness activities.~~.~~

PROPOSED COMPREHENSIVE PLAN AMENDMENTS

NORTHBROOK ZONING CODE
PROPOSED AMENDMENTS - Overall

Introduction

What is a Comprehensive Plan?

The Comprehensive Plan is a policy document outlining the community's intentions regarding the physical development of the Village. It is neither a legislative nor a regulatory document. It offers guidelines and concepts to assist the community and elected officials in the process of their day-to-day development decision making. The form and substance of comprehensive plans have evolved significantly over the years.

The Northbrook Comprehensive Plan uses a variety of techniques to help make the document relevant not just for the Plan Commission and Board of Trustees, but for all Village Departments, local residents, the business community, and other governmental agencies. It has several key features:

1. It is ***comprehensive***; it addresses the ***critical physical, social and economic components*** of our Village;
2. It is ***general***; it establishes ***guidelines, not specific policy mandates***, for future land development and public infrastructure and service decisions;
3. It is ***long-term***; it normally focuses on long-term land use and infrastructure needs;
4. It is ***dynamic*** and ***must change over time*** to respond to evolving conditions.
5. It is ***coordinated*** and ***internally consistent***; the policies in the plan relate to one another.
6. It includes a series of ***goals and general strategies*** related to each element.
   - **Goals** represent the desired outcome by the community. The goals in this Plan are ***recognized as not necessarily being achievable***. They represent the ideals of the Village and are to be used as guide in decision-making and not a mandate limiting the policy options in the future.
   - **Strategies** represent a ***general approach*** related to achieving an established goal or vision. During the course of implementing the Plan, the strategies will be used as a guide to help formulate specific approaches or tasks to effectively implement or achieve the established goals.
7. It is designed to be part of an ***ongoing planning program*** to allow for the ***regular prioritization of implementation measures*** over time based upon the issues of the day and time and resources available.

The Comprehensive Plan should change over time to remain relevant and effective. Nothing in this document is set in stone. It should be an open-ended document, allowing for different plan components to be amended, added to or removed at any time through the plan amendment procedures.

The procedure to formulate a Comprehensive Plan is a process where public agencies, elected officials, special interest groups, community leaders and citizens come together to lay out a long-term comprehensive vision for the future of the community. This vision in turn lays the foundation for public policies and community development guidelines that serve as an overall policy framework for public and private decision-making.

Since comprehensive planning is an ongoing process, different planning processes may be used at different times. The diagram on the next page depicts the process used for the formulation of the Northbrook Comprehensive Plan. It also depicts the ongoing process of reviewing and monitoring the plan and making necessary amendments in the future. As stated previously, an ongoing re-assessment of plan policies and



INTRODUCTION

What is a Comprehensive Plan?

The Comprehensive Plan is a policy document outlining the community's intentions regarding the physical development of the Village. It is neither a legislative nor a regulatory document. It offers guidelines and concepts to assist the community and elected officials in the process of their day-to-day development decision making. The form and substance of comprehensive plans have evolved significantly over the years.

The Northbrook Comprehensive Plan uses a variety of techniques to help make the document relevant not just for the Plan Commission and Board of Trustees, but for all Village Departments, local residents, the business community, and other governmental agencies. It has several key features:

1. It is ***comprehensive***; it addresses the ***critical physical, social and economic components*** of our Village;
2. It is ***general***; it establishes ***guidelines, not specific policy mandates***, for future land development and public infrastructure and service decisions;
3. It is ***long-term***; it normally focuses on long-term land use and infrastructure needs;
4. It is ***dynamic*** and ***must change over time*** to respond to evolving conditions.
5. It is ***coordinated*** and ***internally consistent***; the policies in the plan relate to one another.
6. It includes a series of ***goals and general strategies*** related to each element.
   - **Goals** represent the desired outcome by the community. The goals in this Plan are ***recognized as not necessarily being achievable***. They represent the ideals of the Village and are to be used as guide in decision-making and not a mandate limiting the policy options in the future.
   - **Strategies** represent a ***general approach*** related to achieving an established goal or vision. During the course of implementing the Plan, the strategies will be used as a guide to help formulate specific approaches or tasks to effectively implement or achieve the established goals.
7. It is designed to be part of an ***ongoing planning program*** to allow for the ***regular prioritization of implementation measures*** over time based upon the issues of the day and time and resources available.

The Comprehensive Plan should change over time to remain relevant and effective. Nothing in this document is set in stone. It should be an open-ended document, allowing for different plan components to be amended, added to or removed at any time through the plan amendment procedures.

The procedure to formulate a Comprehensive Plan is a process where public agencies, elected officials, special interest groups, community leaders and citizens come together to lay out a long-term comprehensive vision for the future of the community. This vision in turn lays the foundation for public policies and community development guidelines that serve as an overall policy framework for public and private decision-making.

NORTHBROOK ZONING CODE
PROPOSED AMENDMENTS - Introduction

The new Comprehensive Plan examines a community that is now nearly "built out", with minimal large vacant tracts of land remaining and limited opportunity for annexation. As the map on the following page illustrates, we expect most new development in the future to be of an "infill" nature. The planning policies of the Village thus need to be modified to reflect ~~this situation~~that Northbrook is now a "mature'" community and the policies of the Village need to reflect the emerging development pattern. Likewise, the "slowing" pattern of community growth can also be seen in the population graph on the following page.

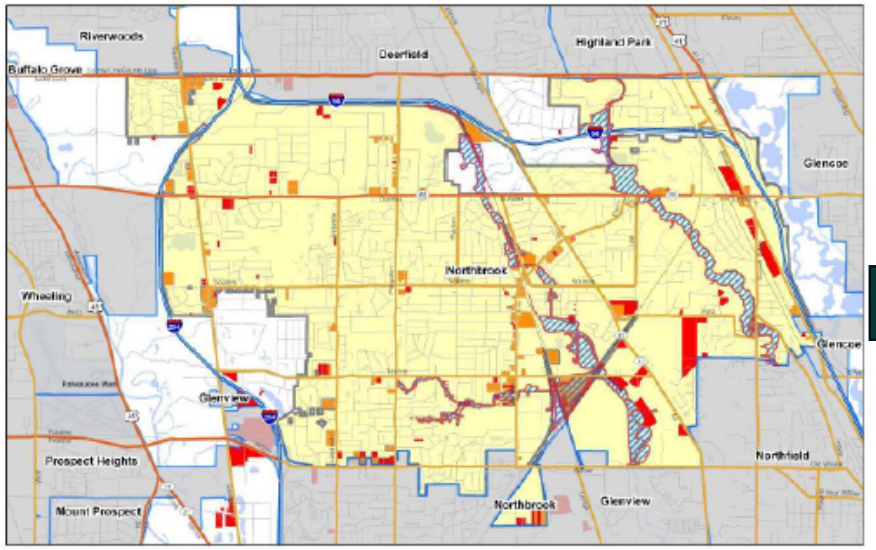

Village of Northbrook
Development & Planning Services

Northbrook Comprehensive Plan:
Vacant or Potential Redevelopment Sites
Northbrook and Immediate Vicinity
(November 1, 2009)

Legend
100-Year Floodplain
Possible Redevelopment Site
Currently Vacant Site
Northbrook Limits

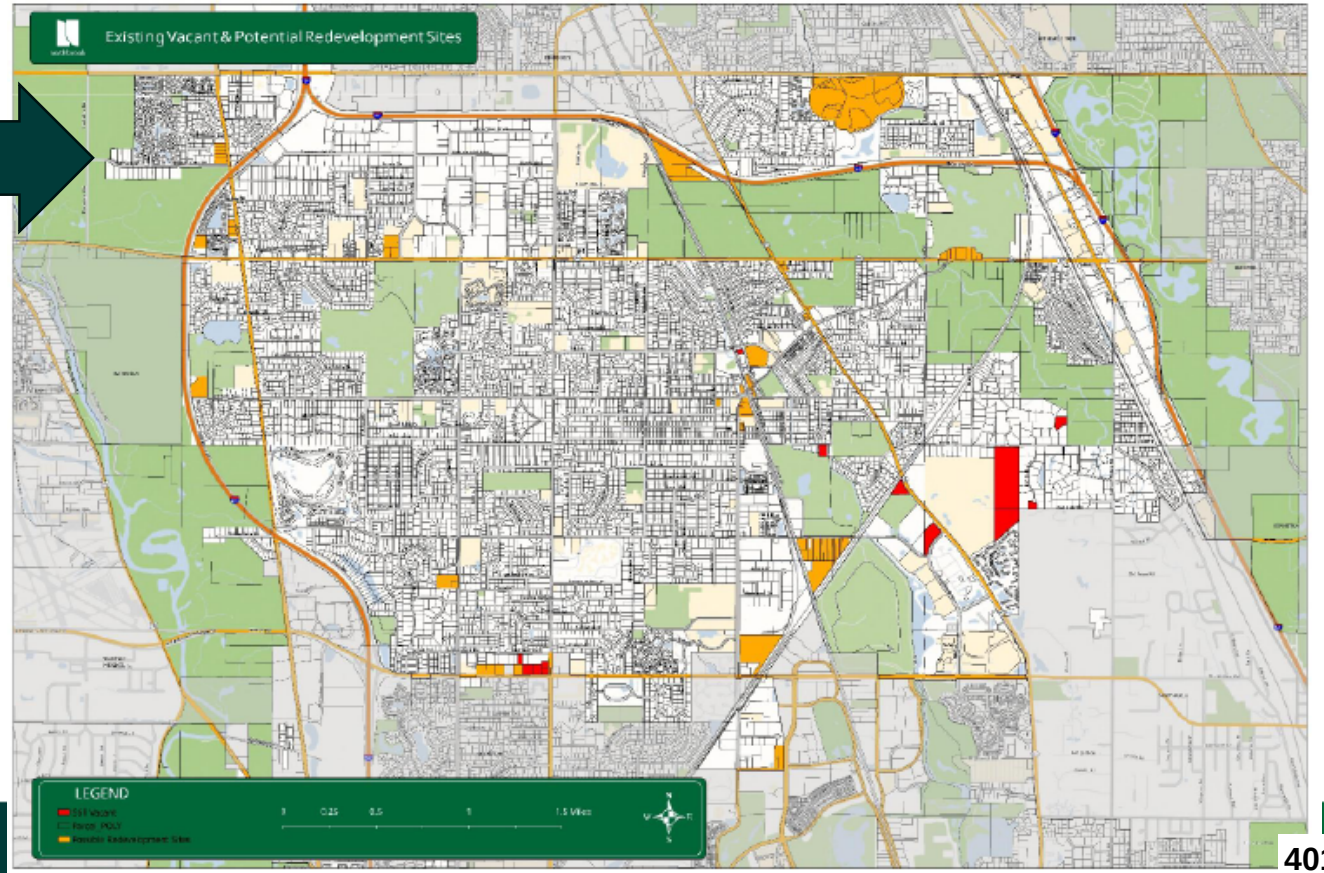

NORTHBROOK ZONING CODE

PROPOSED AMENDMENTS - Introduction

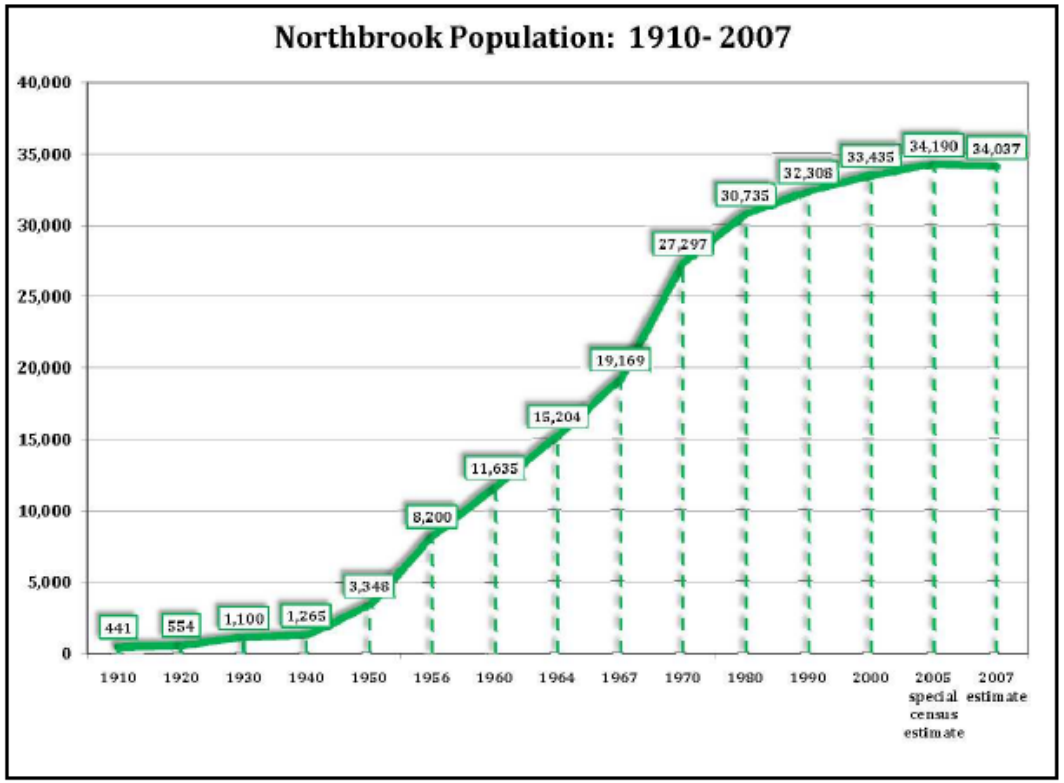

Figure I-A: Northbrook Population Change over Time

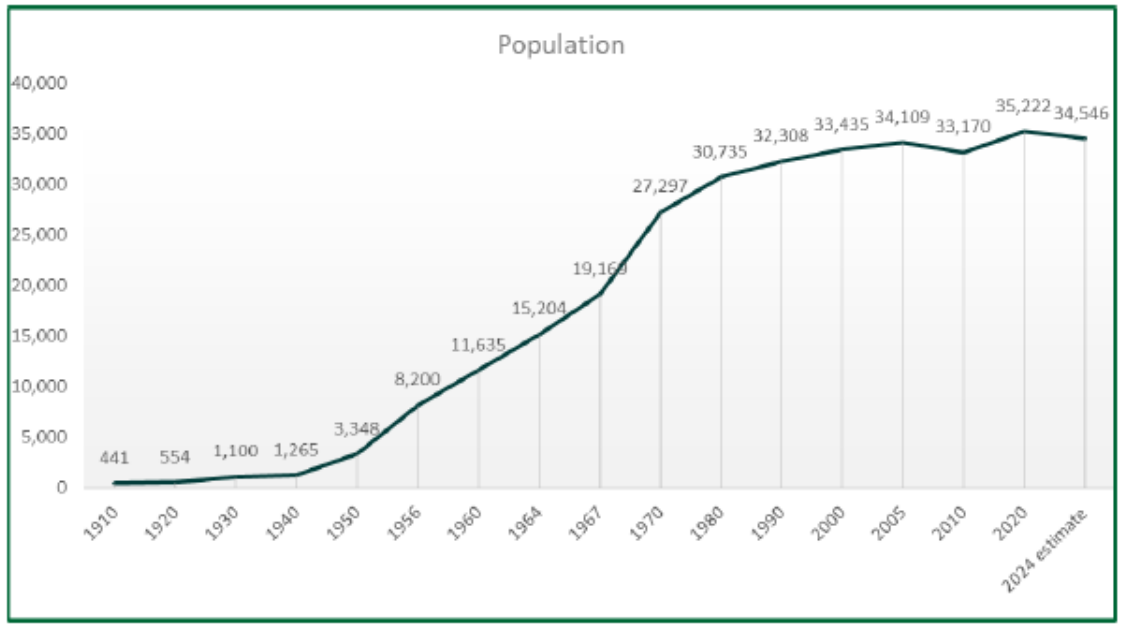

Figure 1: Northbrook Population Over Time

NORTHBROOK ZONING CODE

PROPOSED AMENDMENTS – Element One: Overall Community Goals

ELEMENT ONE:
OVERALL COMMUNITY GOALS

Northbrook's Comprehensive Plan process began with the development of an over arching governing set of goals. These goals are established to guide not only the Comprehensive Plan process, but also the implementation of the Plan over time. The overall goals set the foundation for the entire framework of the Comprehensive Plan.

The goals in this Plan represent the ideals of the Village and are to be used as a guide in local decision-making. They should not be viewed as a mandate that limits the policy options available to the community in the future.

These goals guide the development of the Future Land Use Map, as well as the policies and implementation strategies in every element of the Plan. As the foundation of the Comprehensive Plan, these overall community goals will help direct future policy decisions, land use decisions and planning efforts for many years to come.

A total of twelve overall community goals were developed by the Village's Comprehensive Plan Advisory Committee (CPAC) following a series of orientation sessions on community issues presented by Village staff. The twelve community goals are listed below, in no particular order:

OG 1. Continue Collaborative Decision-Making Practices; A Connected Community. Northbrook will maintain and improve its communication measures and interactions with the residents, businesses and other local taxing bodies (schools, parks and library) to promote a collaborative decision-making process in those matters that have broad policy implications.

OG 2. Continue Efforts to Improve the Downtown. The Village's downtown will evolve into a unique gathering place and transportation hub that is the symbolic center of the community. Enhancing the downtown by means of public-private partnerships will be a high priority of the Village, particularly in the provision of affordable housing opportunities.

OG 3. Promote Sustainable Development. Citizens and decision makers for the Village will recognize their shared responsibility to be conscientious stewards of our natural, manmade and social resources so they will be available for future generations.

OG 4. Maintain the Character of Our Neighborhoods. Northbrook will continue to be a community comprised of attractive, safe and active residential neighborhoods. Recognizing that Northbrook is largely a "built-up" community, the Village will continue to monitor the effectiveness of its zoning, building and property maintenance standards.

OG 5. Celebrate the Community's Diversity. The Village of Northbrook will celebrate its cultural, religious and social diversity, expand its diverse housing stock, and recognize the responsibility we have to improve the community for future generations.

OG 6. Maintain the "Uniqueness" of Northbrook. Northbrook will continue to be a high quality suburban community that continues to have its own unique sense of place and identity as reflected in our architecture, landscape, arts and culture. The Village's uniqueness distinguishes it from surrounding municipalities resulting in a place that residents and businesses alike are proud to call "home".

OG 7. Continue to Invest in Critical Village Infrastructure. The roads, water lines, sanitary sewer lines, storm drainage systems and other public infrastructure will be properly maintained, and a strategic approach to financing will be used in order to minimize the risk of having the investment create an undue financial burden to current or future taxpayers in the community.

OG 8. Deliver Quality Public Services in a Cost-Effective Manner. Northbrook will continue to be known for the outstanding public and private schools, parks, library and other public services that are critical to the quality of life and strong property values of the Village. The Village will strive to maintain high value and cost-effective municipal services.

OG 9. Maintain our Economic Diversity and Vitality. The Village will continue to be a major employment and retail center for the northern suburbs of the Chicago region. We will strive to maintain a strong and diverse tax base by actively working with the business community to retain existing businesses and attract new businesses that are consistent with the character of the community.

OG 10. Encourage Redevelopment of Key Areas in the Village. Northbrook will continue to grow modestly over time with changes occurring in selected redevelopment areas. This redevelopment will be in concert with the overall vision of the Comprehensive Plan, which encourages a compatible, logical and efficient land use pattern that has adequate public facilities to support new growth.

OG 11. Promote Transportation Choices. The Village will work towards establishing and maintaining a multi-modal transportation system that enables residents, employees and regional traffic to move safely and efficiently though and around the Village without undue levels of congestion while still maintaining the character of the community.

OG 12. Formulate Regional Solutions to Regional Issues. Northbrook will continue to be a leader in promoting regional solutions to problems that affect the greater Northbrook area such as air and water pollution, affordable housing, storm drainage and major transportation system components by fostering regional coordination and partnerships.

NORTHBROOK ZONING CODE

PROPOSED AMENDMENTS – Downtown Area Policies

Downtown Area Policies

The Downtown Area of Northbrook consists of an array of uses ranging from single family residential to retail and restaurant to governmental and cultural facilities. The overall goal for this area is to promote a variety of economically viable ~~mixed-use~~ developments containing uses that will strengthen the community center and support one another.

Land Use

a. Promote a mix of land uses that will reinforce the Downtown Area as the Village's governmental and cultural activity center.

b. Enhance and strengthen the Downtown as a community center by promoting a complementary mix of land uses at a moderate density that will support the desired activities, while blending with the surrounding single-family neighborhoods.

c. Place highest intensity land uses at locations well served by the transportation system and not adjacent to single family homes.

d. Promote the introduction of new land uses that attract/generate pedestrian activity, particularly at the ground floor level, such as restaurants galleries and other uses that can be supported by the market.

e. Use zoning incentives to encourage mixed-use development projects.

f. Monitor the effectiveness of zoning controls and amend them as necessary.

~~f.~~g. Support a range of housing types that meet the needs of all residents of the Village, particularly young families and seniors.

DA 1. ***Economic Development***

a. Encourage a balance of retail, restaurant, and office activities that provide necessary services to the residents of the Village; promote residential density levels that support the activities.

b. Review alternatives for public-private partnerships to help finance necessary public improvements to encourage the redevelopment of identified parcels in the Downtown; specifically the use of Tax Increment Financing (TIF) and or the creation of a business district, or special service area.

~~b.~~c. Identify the identity that captures the essence of the Village's future vision for downtown and implement marketing efforts around that vision.

DA 2. ***Transportation***

a. Encourage a pedestrian-friendly "Village" atmosphere throughout the Downtown Area.

b. The Downtown Area should be easily accessible by automobile, foot, bicycle, bus, and train.

c. Continue to monitor the capacity of existing intersections in and around the Downtown to determine if improvements or enhancements are necessary.

d. Consider strategies to maximize the efficiency of on- and off-street parking resources.

~~d.~~e. Promote the use of shared parking for complimentary land uses and destinations.

~~e.~~f. Consider needs of bicyclists in planning future roadway and pedestrian improvements.

~~f.~~g. Recognize the importance of the Downtown commuter station as one of the focal points for downtown activity.

DA 3. ***Community Facilities and Amenities***

a. Improve the coordination of business, civic and cultural activities.

b. Reinforce the Village Green Park as a community focal point and important open space and recreation element.

c. Provide for streetscape improvements as development occurs ~~on Shermer Road north of Church Street and south of Walters Avenue~~in the Village Green Overlay District.

DA 4. ***Infrastructure & Utilities***

a. Continue efforts to enhance the river and mitigate flooding, while establishing a continuous and useable open space system along the river.

b. Place utilities underground whenever practical and possible.

c. Recognize the existence of 100-year floodplain areas and work to remove flood hazards.

DA 5. ***Public Participation***

a. Continue to involve a mix of residents, Downtown property owners, and business representatives and community leaders in the decision-making process for the future of the Downtown.

b. Widely publicize public hearings involving significant regulatory, land use or transportation changes in the Downtown.

~~b.~~c. Coordinate efforts with downtown property owners and business representatives to establish a Downtown Association.

FOR MORE INFORMATION

northbrook.il.us



MEMORANDUM

To: Village Manager Cara Pavlicek
From: Director of Development & Planning Services Amy McEwan
Date: 2026-07-14
Subject: An Ordinance Amending the Northbrook Comprehensive Plan (Plan Commission Docket No. PCD-26-03)

Overview
As recommended by the Plan Commission, documented metrics in the Plan have updated and the Village's Strategic Plan and branding identities have been added to the Northbrook Comprehensive Plan that was adopted December 14, 2010.

Fiscal Impact
N/A.

Recommendation
Approval.

Strategic Priority
Economic Vitality. Promote Northbrook as a thriving community and economic leader. Designation of a Strategic Plan goal does not indicate the merit or recommendation of requested relief.

Background

On July 14, 2026, the Board of Trustees is scheduled to consider two Ordinances approving a series of amendments to the Northbrook Zoning Code and Northbrook Comprehensive Plan as part of a Village initiated application. The Northbrook Zoning Code was adopted by Ordinance 25-55 on September 9, 2025, and since that time staff has maintained a list of technical corrections and clarifications necessary for the new Zoning Code.

Simultaneously, staff has begun the process of updating the Northbrook Comprehensive Plan, which was adopted on December 14, 2010. Since its adoption, metrics in the plan have adjusted over the last fifteen years and the Village adopted a Strategic Plan and branding identity. At this time, staff has begun to update the metrics and modify language to align with the adopted Strategic Plan and other Village plans which have been created since 2010, as well as shift the format to align with the Village’s current branding.

The proposed amendments outlined in the exhibits attached to the included draft ordinances underwent a public hearing process at the Plan Commission on May 19, 2026 and June 16, 2026. During the public hearing staff presented the proposed amendments and noted the reasoning behind the amendments. The Commission heard testimony from one resident regarding an interest in changing the goals of the Comprehensive Plan; however, that was not something contemplated with the amendments as the goals align with the recently adopted Strategic Plan, with the exception of one minor language adjustment to include language from the Strategic Plan in a title, without changing the actual goal.

Following the public hearing, the Commission unanimously recommended approval of the proposed amendments, with one additional amendment to the Downtown Area Policies to provide streetscape improvements as development occurs in the Village Green Overlay District as a whole, whereas previously it listed only a few blocks within the overlay district. This amendment is reflected in the attached Ordinance Amending the Comprehensive Plan Exhibit C. This item is placed on the Consent Agenda as is the practice when the Plan Commission has unanimously recommended approval.

The amendments to the Zoning Code are to correct several typographical errors, and to include language from the prior Zoning Code that was inadvertently excluded from the new Zoning Code. There were also a few amendments to add contextual language to items which will allow for more ease of clarity for users. The amendments are tracked in the attached Ordinance exhibits.

Included with the draft documents for approval are the staff reports and Plan Commission resolutions for review, as well as the minutes from the May 19, 2026 meeting. The minutes of the June 16, 2026 meeting were not yet available. On May 19, 2026 the Plan Commission adopted, by a vote of 6 -0 (three members absent), the attached Resolution No. 26-PC-04 recommending approval of the amendments, and on June 16 the Plan Commission adopted, by a vote of 9-0, the attached Resolution No. 26-PC-06 also recommending approval of one final amendment.

An Ordinance Amending the Northbrook Comprehensive Plan
Supplemental - Plan Commission Minutes, Resolutions, and Reports
Supplemental - Staff Powerpoint

ORDINANCE 2026-_____

BE IT ORDAINED by the Board of Trustees of the Village of Northbrook, County of Cook and State of Illinois THAT:

An Ordinance Amending the Northbrook Comprehensive Plan (Plan Commission Docket No. BOT-26-03)

shall be, and is hereby, adopted as follows:

Section 1. BACKGROUND.

The Village is a home rule municipal corporation pursuant to Article VII, Section 6(a) of the Constitution of the State of Illinois of 1970.

The Village is authorized to enact laws and regulations governing the annexation, subdivision, use, and development of land within its jurisdiction pursuant to its powers under Article 11 of the Illinois Municipal Code (65 ILCS 5/11-1-1 *et seq*.) and its home rule powers to preserve and promote the health, safety, and welfare of the residents of the Village.

The Board of Trustees of the Village of Northbrook (the "***Applicant***") has filed an application for certain amendments to the Village of Northbrook Comprehensive Plan, adopted December 14, 2010, as amended from time to time (the "***Comprehensive Plan***").

The Board of Trustees hereby find that it is in the best interest of the public and the Village to amend the Comprehensive Plan as provided in this Ordinance ("***Amendments***"). The Amendments are adopted in accordance with the Zoning Code, specifically Section 2-116, and pursuant to the Village's home rule authority.

Section 2. PUBLIC HEARINGS.

A public notice for the Amendments was duly published on May 4, 2026 on the Village Public Notices and Hearings webpage and a public hearing was held at the Plan Commission's regular meetings on May 19, 2026.

Section 3. AMENDMENT TO THE INTRODUCTION OF THE COMPREHENSIVE PLAN.

The Introduction of the Comprehensive Plan entitled "Introduction" shall be, and is hereby amended as set forth in ***Exhibit A*** to this Ordinance.

Section 4. AMENDMENT TO ELEMENT ONE OF THE COMPREHENSIVE PLAN.

Element One, entitled "Overall Community Goals" of the Comprehensive Plan, shall be, and is hereby amended as set forth in ***Exhibit B*** to this Ordinance.

Section 5. AMENDMENT TO ELEMENT 9 OF THE COMPREHENSIVE PLAN.

Downtown Area Policies, located within Element 9 of the Comprehensive Plan, entitled "Land Use and Annexation" shall be, and is hereby amended as set forth in ***Exhibit C*** to this Ordinance.

Section 6. NOTICE OF ADOPTION.

Pursuant to the requirements of Section 2-116.E.2 of the Zoning Code, the Village Manager shall cause a certified copy of this Ordinance to be placed on file in the Office of the Village Clerk and shall cause a notice evidencing the adoption of this Ordinance to be filed with the Cook County Recorder of Deeds.

Section 7. EFFECTIVE DATE.

This Ordinance shall be in full force and effect only upon the occurrence of all of the following events:

A. Passage by the Board of Trustees of the Village of Northbrook; and

B. Publication in pamphlet form in the manner required by law.

PASSED: This __ day of July 2026.

AYES: ()

NAYS: ()

ABSENT: ()

ABSTAIN: ()

_____
Village President

ATTEST:

_____
Village Clerk

EXHIBIT A

Introduction to the Comprehensive Plan of Northbrook (deletions are struck through and additions are shown as underlined)

INTRODUCTION

What is a Comprehensive Plan?

The Comprehensive Plan is a policy document outlining the community's intentions regarding the physical development of the Village. It is neither a legislative nor a regulatory document. It offers guidelines and concepts to assist the community and elected officials in the process of their day-to-day development decision making. The form and substance of comprehensive plans have evolved significantly over the years.

The Northbrook Comprehensive Plan uses a variety of techniques to help make the document relevant not just for the Plan Commission and Board of Trustees, but for all Village Departments, local residents, the business community, and other governmental agencies. It has several key features:

1. It is ***comprehensive***; it addresses the ***critical physical, social and economic components*** of our Village;
2. It is ***general***; it establishes ***guidelines, not specific policy mandates***, for future land development and public infrastructure and service decisions;
3. It is ***long-term***; it normally focuses on long-term land use and infrastructure needs;
4. It is ***dynamic*** and ***must change over time*** to respond to evolving conditions.
5. It is ***coordinated*** and ***internally consistent***; the policies in the plan relate to one another.
6. It includes a series of ***goals and general strategies*** related to each element.
    - **Goals** represent the desired outcome by the community. The goals in this Plan are ***recognized as not necessarily being achievable***. They represent the ideals of the Village and are to be used as guide in decision-making and not a mandate limiting the policy options in the future.
    - **Strategies** represent a ***general approach*** related to achieving an established goal or vision. During the course of implementing the Plan, the strategies will be used as a guide to help formulate specific approaches or tasks to effectively implement or achieve the established goals.
7. It is designed to be part of an ***ongoing planning program*** to allow for the ***regular prioritization of implementation measures*** over time based upon the issues of the day and time and resources available.

The Comprehensive Plan should change over time to remain relevant and effective. Nothing in this document is set in stone. It should be an open-ended document, allowing for different plan components to be amended, added to or removed at any time through the plan amendment procedures.

The procedure to formulate a Comprehensive Plan is a process where public agencies, elected officials, special interest groups, community leaders and citizens come together to lay out a long-term comprehensive vision for the future of the community. This vision in turn lays the foundation for public policies and community development guidelines that serve as an overall policy framework for public and private decision-making.

Since comprehensive planning is an ongoing process, different planning processes may be used at different times. The diagram on ~~the next page depicts~~page six of this section depicts the process used for the formulation of the Northbrook Comprehensive Plan. It also depicts the ongoing process of reviewing and monitoring the plan and making necessary amendments in the future. As stated previously, an ongoing re-assessment of plan policies and programs, as well as conditions in the Village is necessary in order to make inevitable "mid-course corrections."

Elements of the Northbrook Comprehensive Plan

The Northbrook Comprehensive plan contains ten "Elements" or chapters that address existing and anticipated issues in the Village. The ten Elements include the following:

1. Overall Community Goals
2. Community Involvement & Governance
3. Environmental Quality & Natural Resource Protection
4. Neighborhoods, Housing & Community Diversity
5. Community Character, Culture & Design
6. Transportation Choices
7. Public Services, Facilities & Infrastructure
8. Economic Vitality
9. Land Use & Annexation
10. Implementation of the Comprehensive Plan

The Overall Community Goals Element outlines those "over arching" goals that form the basic foundation for the Plan and the many policies and programs established in the document. The next eight Elements of the Comprehensive Plan focus on a variety of general topics that the Village expects to address in the next ten to twenty years. The last Element of the Plan outlines how the Village should establish priorities for implementing the many policies, goals, and strategies in the Comprehensive Plan. On an annual basis the Board of Trustees will establish a work program identifying the items in the Comprehensive Plan that should be addressed given the types of issues that have arisen and the resources available. **Priorities for implementing the Plan are essential. It is neither possible nor desirable to try and undertake all of the recommendations in the Plan immediately after it is adopted.**

Prior Comprehensive Plan

The last complete "planning effort" took place in 1982. The 1982 Land Use Plan was successful in guiding the community's growth and development during a period of heightened development pressure. The 1982 Plan was amended many times over the years; however, virtually all of those amendments have involved changes only to the Future Land Use Map.

The new Comprehensive Plan examines a community that is now nearly "built out", with minimal large vacant tracts of land remaining and limited opportunity for annexation. As the map on the following page illustrates, we expect most new development in the future to be of an "infill" nature. The planning policies of the Village thus need to be modified to reflect ~~this situation~~that Northbrook is now a "mature'" community and the policies of the Village need to reflect the emerging development pattern. Likewise, the "slowing" pattern of community growth can also be seen in the population graph on the following page.

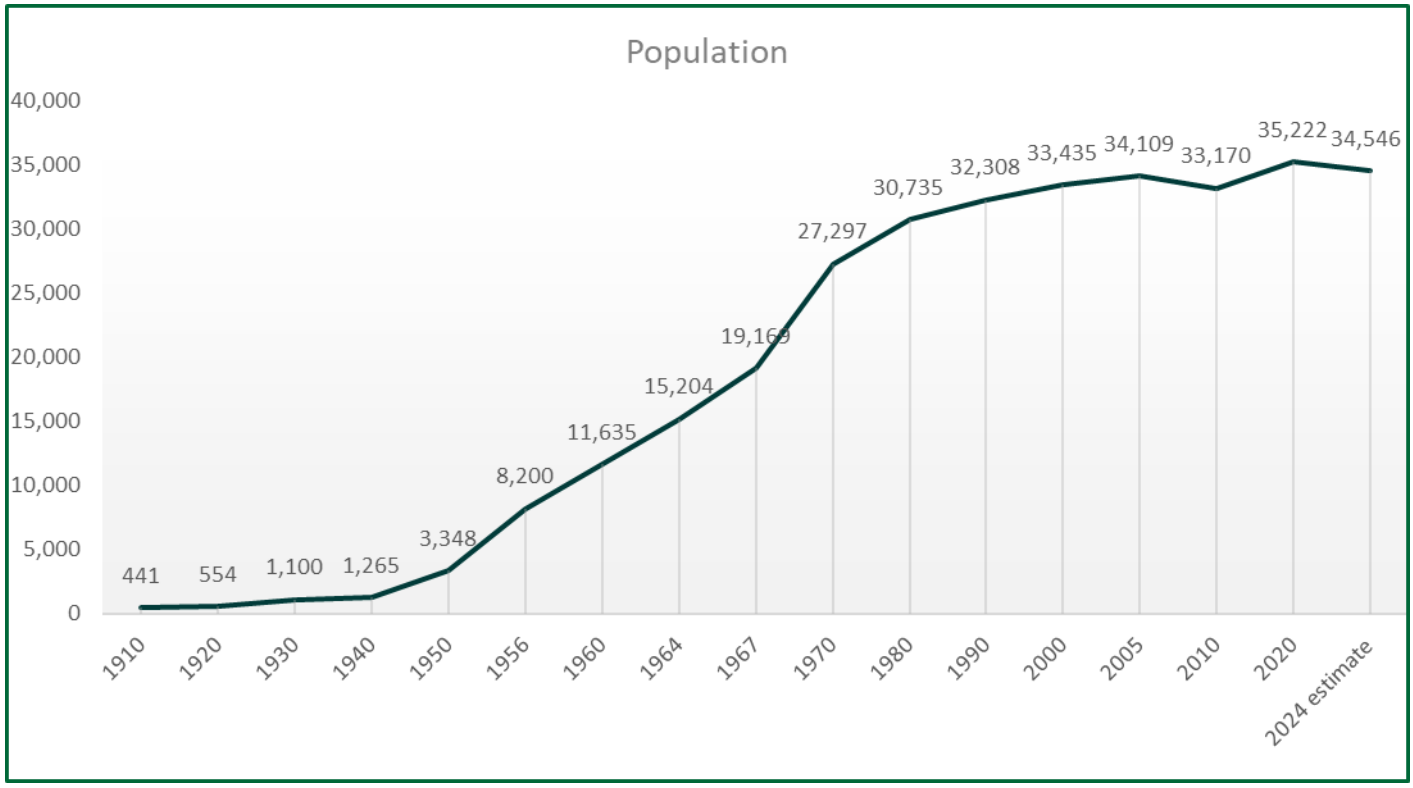

Figure 1: Northbrook Population Over Time

As the Village prepared the new Comprehensive Plan, several points were key to the formulation of our planning principles:

- Northbrook has a balanced mix of land uses that includes major employment centers, significant expanses of permanent open space, vibrant commercial areas, and high quality residential neighborhoods.
- Our schools and parks are among the finest in the nation.
- The community has a well maintained infrastructure system.
- Crime is relatively low in the Village, and Northbrook is widely regarded as a very safe community in which to live, work and shop.
- Northbrook is served by an excellent multi-modal transportation system that provides residents, businesses and visitors with easy access to the regional road network, interstate highway system, and mass transit system. Likewise Northbrook is only a few minutes away from O'Hare International Airport and the smaller Chicago Executive Airport.
- Property values in Northbrook remain strong despite the national economic downturn in the housing market while property taxes are relatively low in comparison to similar communities in the area.
- There are a variety of well preserved environmental features in the community including forests, rivers, wetlands and natural prairies.

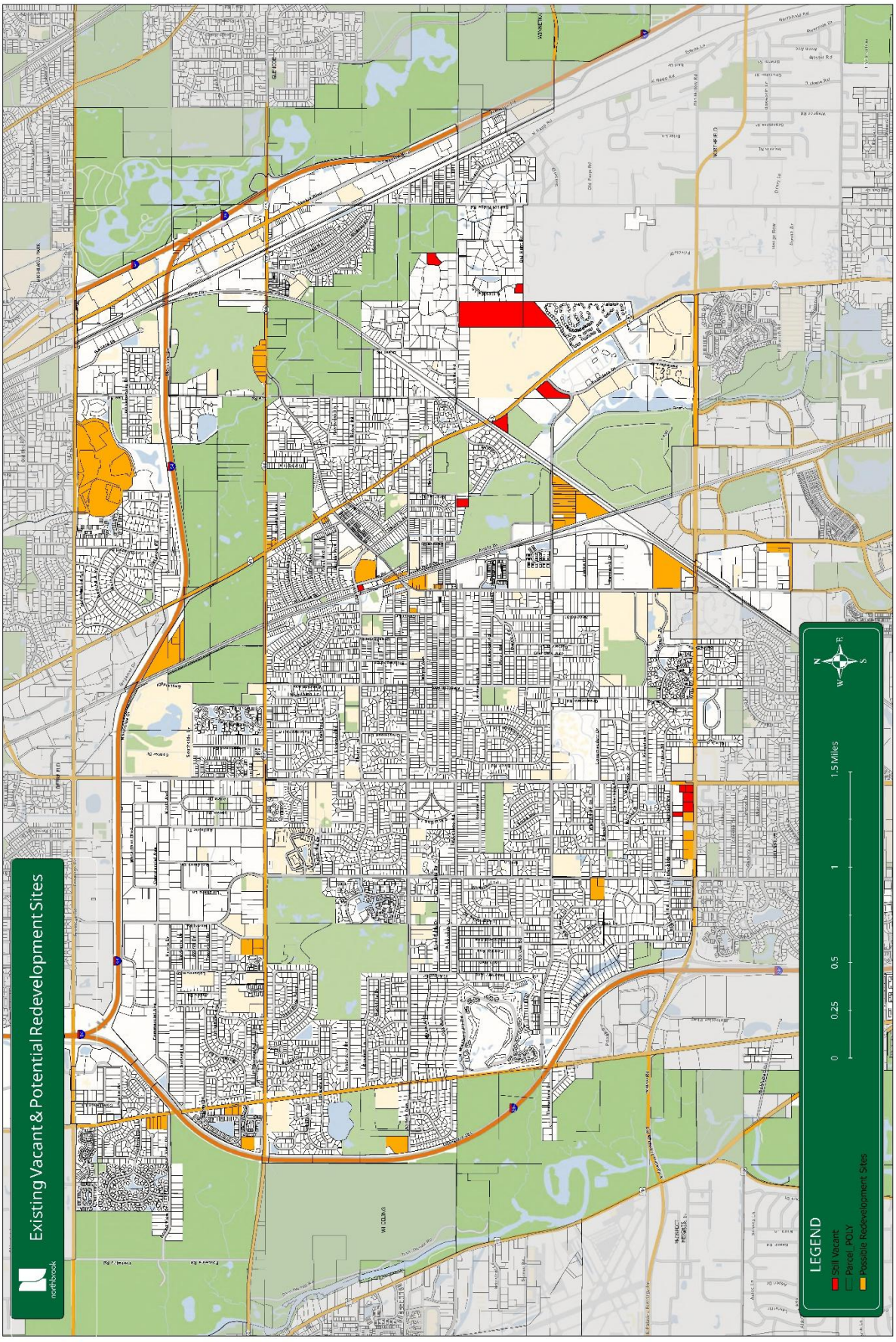

Figure 2: Vacant Land and Potential Redevelopment Sites as of May 1, 2026

It is with this backdrop that we are ***planning for the continued success of Northbrook***. The planning effort focuses on addressing minor problems early-on and protecting community assets.

Identifying Emerging Trends

Following the business model of a strategic plan, the Northbrook Comprehensive Plan recognizes that conditions can and will change following the adoption of the Plan. To remain relevant, the Plan will be reviewed and amended as needed from time to time to be responsive to changing conditions.

The future work program for the Comprehensive Plan will involve regularly assembling critical local and regional data to gauge whether or not certain priorities need to be adjusted or programs abandoned in their entirety. The work program is designed to annually present maps and statistics to the Plan Commission and Board of Trustees on a wide variety of topics such as:

- Traffic counts and accident data;
- Population and demographic information;
- Retail sales and market data;
- Demolition and building permit data;
- Home price and rent statistics;
- Utility and infrastructure information;
- Commercial, office and industrial vacancy rates;
- Employment information.

For instance if vacancy rates in our shopping centers begin to increase sharply, the Village would likely modify some of its economic development goals and strategies to address this problem early-on. Likewise if a major employment use was to announce it is leaving the community, it may be appropriate to look at alternative land uses for a property that had not previously been considered a redevelopment site. During the course of drafting the Comprehensive Plan, the nation as a whole witnessed a rapid increase in energy prices, and a significant downturn in the economy. The unanticipated will continue to occur and the Plan is designed to help the community to identify these changes and take responsible actions. Those actions may necessitate amendments to the Plan itself.

Measuring the Effectiveness of Implementation Efforts

The Comprehensive Plan is also designed to look at whether or not the policies, goals, and strategies in the document are actually being implemented in accordance with the established priorities. Staff will annually present a report summarizing the steps taken to implement the policies, goals, and strategies. The report will refer back to the implementation priorities and indicate whether or not the particular items have been completed as initially planned.

Planned Review Every Five Years

Finally, it is recommended that once every five years the entire Plan is evaluated to see if any major adjustments to the goals, strategies and priorities of the Plan or the Future Land Use Map and Transportation Plan are needed.



EXHIBIT B

Element One of the Comprehensive Plan of Northbrook (deletions are struck through and additions are shown as underlined)

ELEMENT ONE:
OVERALL COMMUNITY GOALS

Northbrook's Comprehensive Plan process began with the development of an over arching governing set of goals. These goals are established to guide not only the Comprehensive Plan process, but also the implementation of the Plan over time. The overall goals set the foundation for the entire framework of the Comprehensive Plan.

The goals in this Plan represent the ideals of the Village and are to be used as a guide in local decision-making. They should not be viewed as a mandate that limits the policy options available to the community in the future.

These goals guide the development of the Future Land Use Map, as well as the policies and implementation strategies in every element of the Plan. As the foundation of the Comprehensive Plan, these overall community goals will help direct future policy decisions, land use decisions and planning efforts for many years to come.

A total of twelve overall community goals were developed by the Village's Comprehensive Plan Advisory Committee (CPAC) following a series of orientation sessions on community issues presented by Village staff. The twelve community goals are listed below, in no particular order:

OG 1. **Continue Collaborative Decision-Making Practices; A Connected Community**. Northbrook will maintain and improve its communication measures and interactions with the residents, businesses and other local taxing bodies (schools, parks and library) to promote a collaborative decision-making process in those matters that have broad policy implications.

OG 2. **Continue Efforts to Improve the Downtown**. The Village's downtown will evolve into a unique gathering place and transportation hub that is the symbolic center of the community. Enhancing the downtown by means of public-private partnerships will be a high priority of the Village, particularly in the provision of affordable housing opportunities.

OG 3. **Promote Sustainable Development**. Citizens and decision makers for the Village will recognize their shared responsibility to be conscientious stewards of our natural, manmade and social resources so they will be available for future generations.

OG 4. **Maintain the Character of Our Neighborhoods**. Northbrook will continue to be a community comprised of attractive, safe and active residential neighborhoods. Recognizing that Northbrook is largely a "built-up" community, the Village will continue to monitor the effectiveness of its zoning, building and property maintenance standards.

OG 5. **Celebrate the Community's Diversity**. The Village of Northbrook will celebrate its cultural, religious and social diversity, expand its diverse housing stock, and recognize the responsibility we have to improve the community for future generations.

OG 6. **Maintain the "Uniqueness" of Northbrook**. Northbrook will continue to be a high quality suburban community that continues to have its own unique sense of place and identity as reflected in our architecture, landscape, arts and culture. The Village's uniqueness

distinguishes it from surrounding municipalities resulting in a place that residents and businesses alike are proud to call “home”.

OG 7. Continue to Invest in Critical Village Infrastructure. The roads, water lines, sanitary sewer lines, storm drainage systems and other public infrastructure will be properly maintained, and a strategic approach to financing will be used in order to minimize the risk of having the investment create an undue financial burden to current or future taxpayers in the community.

OG 8. Deliver Quality Public Services in a Cost-Effective Manner. Northbrook will continue to be known for the outstanding public and private schools, parks, library and other public services that are critical to the quality of life and strong property values of the Village. The Village will strive to maintain high value and cost-effective municipal services.

OG 9. Maintain our Economic Diversity and Vitality. The Village will continue to be a major employment and retail center for the northern suburbs of the Chicago region. We will strive to maintain a strong and diverse tax base by actively working with the business community to retain existing businesses and attract new businesses that are consistent with the character of the community.

OG 10. Encourage Redevelopment of Key Areas in the Village. Northbrook will continue to grow modestly over time with changes occurring in selected redevelopment areas. This redevelopment will be in concert with the overall vision of the Comprehensive Plan, which encourages a compatible, logical and efficient land use pattern that has adequate public facilities to support new growth.

OG 11. Promote Transportation Choices. The Village will work towards establishing and maintaining a multi-modal transportation system that enables residents, employees and regional traffic to move safely and efficiently though and around the Village without undue levels of congestion while still maintaining the character of the community.

OG 12. Formulate Regional Solutions to Regional Issues. Northbrook will continue to be a leader in promoting regional solutions to problems that affect the greater Northbrook area such as air and water pollution, affordable housing, storm drainage and major transportation system components by fostering regional coordination and partnerships.

EXHIBIT C

A Section of Element Nine of the Comprehensive Plan of Northbrook (deletions are struck through and additions are shown as underlined)

Downtown Area Policies

The Downtown Area of Northbrook consists of an array of uses ranging from single family residential to retail and restaurant to governmental and cultural facilities. The overall goal for this area is to promote a variety of economically viable ~~mixed use~~ developments containing uses that will strengthen the community center and support one another.

Land Use

a. Promote a mix of land uses that will reinforce the Downtown Area as the Village's governmental and cultural activity center.

b. Enhance and strengthen the Downtown as a community center by promoting a complementary mix of land uses at a moderate density that will support the desired activities, while blending with the surrounding single-family neighborhoods.

c. Place highest intensity land uses at locations well served by the transportation system and not adjacent to single family homes.

d. Promote the introduction of new land uses that attract/generate pedestrian activity, particularly at the ground floor level, such as restaurants galleries and other uses that can be supported by the market.

e. Use zoning incentives to encourage mixed-use development projects.

f. Monitor the effectiveness of zoning controls and amend them as necessary.

~~f.~~g. Support a range of housing types that meet the needs of all residents of the Village, particularly young families and seniors.

DA 1. ***Economic Development***

a. Encourage a balance of retail, restaurant, and office activities that provide necessary services to the residents of the Village; promote residential density levels that support the activities.

b. Review alternatives for public-private partnerships to help finance necessary public improvements to encourage the redevelopment of identified parcels in the Downtown; specifically the use of Tax Increment Financing (TIF) and or the creation of a business district, or special service area.

~~b.~~c. Identify the identity that captures the essence of the Village's future vision for downtown and implement marketing efforts around that vision.

DA 2. ***Transportation***

a. Encourage a pedestrian-friendly "Village" atmosphere throughout the Downtown Area.

b. The Downtown Area should be easily accessible by automobile, foot, bicycle, bus, and train.

c. Continue to monitor the capacity of existing intersections in and around the Downtown to determine if improvements or enhancements are necessary.

Formatted

d. Consider strategies to maximize the efficiency of on- and off-street parking resources.

~~d.~~e. Promote the use of shared parking for complimentary land uses and destinations.

~~e.~~f. Consider needs of bicyclists in planning future roadway and pedestrian improvements.

~~f.~~g. Recognize the importance of the Downtown commuter station as one of the focal points for downtown activity.

DA 3. ***Community Facilities and Amenities***

a. Improve the coordination of business, civic and cultural activities.

b. Reinforce the Village Green Park as a community focal point and important open space and recreation element.

c. Provide for streetscape improvements as development occurs ~~on Shermer Road north of Church Street and south of Walters Avenue~~in the Village Green Overlay District.

DA 4. ***Infrastructure & Utilities***

a. Continue efforts to enhance the river and mitigate flooding, while establishing a continuous and useable open space system along the river.

b. Place utilities underground whenever practical and possible.

c. Recognize the existence of 100-year floodplain areas and work to remove flood hazards.

DA 5. ***Public Participation***

a. Continue to involve a mix of residents, Downtown property owners, and business representatives and community leaders in the decision-making process for the future of the Downtown.

b. Widely publicize public hearings involving significant regulatory, land use or transportation changes in the Downtown.

~~b.~~c. Coordinate efforts with downtown property owners and business representatives to establish a Downtown Association.

Formatted

APPROVED

RESOLUTION NO. 26-PC-04

VILLAGE OF NORTHBROOK PLAN COMMISSION
DOCKET NO. PCD-26-03
PROPOSED AMENDMENTS TO THE ZONING CODE AND COMPREHENSIVE PLAN

WHEREAS, an application has been filed by the President and Board of Trustees of the Village of Northbrook (the "Applicant") to consider a series of minor amendments to the following articles of the Village of Northbrook Zoning Code (2025) and Elements of the Comprehensive Plan (2010):

- Article 1: General Provisions
- Article 2: Ordinance Administration and Enforcement
- Article 3: Single-Family District Standards
- Article 4: Multi-Family and Mixed Use District Standards
- Article 5: Office District Standards
- Article 6: Commercial District Standards
- Article 7: Industrial District Standards
- Article 8: Institutional and Open Space District Standards
- Article 9: Overlay District Standards
- Article 10: General Development Standards
- Article 11: Sign Standards
- Article 14: Definitions
- Comprehensive Plan Introduction
- Comprehensive Plan Element One
- Comprehensive Plan Downtown Area Policies

WHEREAS, the Applicant has filed an application (Docket No. PCD-26-03) with the Village of Northbrook requesting the amendments to the current Zoning Code of the Village of Northbrook and Comprehensive Plan; and

WHEREAS, a public notice for this docket was duly published on May 4, 2026 on the *Village of Northbrook Public Notice Webpage* and a public hearing was held at the Plan Commission's regular meetings on May 19, 2026; and

WHEREAS, the Plan Commission has considered all the evidence presented to it, including, but not limited to, the following:

1. Staff reports prepared by the Village of Northbrook Development and Planning Services Department submitted for the May 19, 2026 Plan Commission meeting;
2. Testimony on behalf of the Applicant; and
3. All written and oral testimony concerning the application and the proposed Comprehensive Amendment.

NOW, THEREFORE, BE IT RESOLVED by the Plan Commission of the Village of Northbrook, Cook County, Illinois, THAT:

Resolution No. 26-PC-04
Docket No. PCD-26-03 – Proposed Amendments to the Northbrook Zoning Code & Comprehensive Plan

1. **Findings:** With respect to Docket No. PCD-26-03, the Plan Commission hereby finds that amendments to the current Zoning Code of the Village of Northbrook and Comprehensive Plan **are consistent** and meets the standards in Subsections 2-116 D and 2-117 D of the Northbrook Zoning Code.

2. **Recommendations:** The Northbrook Plan Commission does hereby recommend to the President and Board of Trustees of the Village of Northbrook **approval** of Docket No. PCD-26-03 based on the findings established herein, subject to the following conditions:

   A. Revising the proposed language in the Comprehensive Plan Downtown Area Policies document item DA 3.c to not list specific streets, and state "Provide for streetscape improvements as development occurs in the Village Green Overlay District."

ADOPTED THIS 19th day of May 2026.

AYES: (6) Early, Elisco, Melnick, Morgan, Pipito, Walden

NAYS: (0)

ABSENT: (3) Braiman, Halperin, Karavitis

ABSTAIN: (0)

/s/ Steven Elisco
Steven Elisco, Chairman
Northbrook Plan Commission

ATTEST:
/s/ Amy McEwan
Amy McEwan, Director
Development and Planning Services

Plan Commission Minutes - APPROVED

Sandra "Sandy" Frum Board Room
1225 Cedar Lane Northbrook, IL 60062
Tuesday, May 19, 2026

PLAN COMMISSION

1) Roll Call

Attendee Name	Title	Status
Steven Elisco	Chairman	Present
Jeff Braiman	Commissioner	Absent
Andrea Pipito	Commissioner	Present
Allen Morgen	Commissioner	Present
Jeremy Melnick	Commissioner	Present
Nikos Karavitis	Commissioner	Absent
Keri Halperin	Commissioner	Absent
Jackie Earley	Commissioner	Present
Ken Walden	Commissioner	Present
Michaela Kohlstedt	Deputy Director	Present
Swati Pandey	Senior Planner	Present
Caitlyn Culbertson	Village Attorney	Present

2) Minutes Approval

2.A) Minutes for Approval - April 21, 2026

Commissioner Morgen moved, Commissioner Melnick seconded the motion to approve the regular meeting minutes for April 21, 2026, as amended. On voice vote, all were in favor.

Commissioner Walden abstained.

3) Community Planning Report

Michaela Kohlstedt, Deputy Director, reported that the Village's Building Official retired at the end of April and announced that Jennifer Holtz has been appointed as the new Building Official, noting that she is already excelling in the role. Ms. Kohlstedt then summarized recent actions by the Village Board of Trustees across two past meetings. At its April 28, 2026, meeting, the Board approved the Mariano's gas station proposal previously recommended by the Plan Commission and adopted the new annual fee ordinance to enhance fee transparency, effective June 1, 2026. Conversely, an April 28 preliminary review for a High Five Sports group fitness facility at 3451 Commercial Avenue was not as well received by the Board due to incompatible surrounding industrial and commercial uses and the necessity of a zoning code amendment. At its May 12, 2026, meeting, the Board waived the preliminary review for a Zoning Code and Comprehensive Plan amendment to facilitate discussion at tonight's May 19, 2026, Plan Commission meeting.

Also on May 12, Director of Development and Planning Services Amy McEwan presented on the Statement of Qualification and Proposal (SOQ) process; Ms. Kohlstedt explicitly encouraged the Plan Commission to watch the video of that meeting to review the process. Furthermore, the Board directed the Village Manager and Village Attorney to draft a purchase and sale agreement with the Habitat development company for 1657 Shermer Road—authorized as a mixed-use project consisting of luxury apartments and commercial space—and permitted the Village Manager to sign a letter allowing Habitat to apply for preliminary review.

4) Public Comment Time

5) Public Hearing

5.A) DOCKET NO. PCD-26-01: 608-610 SANDERS ROAD - THREE-LOT SUBDIVISION (Public Hearing Continued to June 16, 2026) - An application filed by M&D Builders, LLC as owner of 608-610 Sanders Road, for the purpose of authorizing the following zoning relief: (A) Voluntary Annexation into the Village of Northbrook; (B) Rezone to R-6 Single Family Residential District; (C) Variation of the Subdivision Code to allow a combined tentative and final plat of subdivision for a three-lot subdivision; (D) Variation of the Subdivision Code to allow detention in an easement rather than an outlot; (E) Waiver of underground installation of public utility facilities per Subdivision Code; and (F) Approval of any other such variations, waivers, and zoning relief as may be necessary.

Commissioner Walden made a motion to continue the public hearing request for this application to the Plan Commission meeting on July 21, 2026; seconded by Commissioner Melnick. On roll call vote, all were in favor. (6 Yes Votes, 0 No Votes)

5.B) DOCKET NO. PCD-26-03: VILLAGE OF NORTHBROOK - AMENDMENTS TO THE ZONING CODE AND THE NORTHBROOK COMPREHENSIVE PLAN (Public Hearing) - An Application by the President and Board of Trustees of the Village of Northbrook to consider amendments to the following articles of the Village of Northbrook Zoning Code: Article 1: General Provisions; Article 2: Ordinance Administration and Enforcement; Article 3: Single-Family District Standards; Article 4: Multi-Family and Mixed Use District Standards; Article 5: Office District Standards; Article 6: Commercial District Standards; Article 7: Industrial District Standards; Article 8: Institutional and Open Space District Standards; Article 9: Overlay District Standards; Article 10: General Development Standards; Article 11: Sign Standards; Article 14: Definitions. The Application also includes minor amendments to the Introduction, Element One, and the Downtown Area Policies of the Northbrook Comprehensive Plan.

Michaela Kohlstedt, Deputy Director, presented an application on behalf of the President and Board of Trustees of the Village of Northbrook, requesting consideration of a series of text amendments to various articles of the Northbrook Zoning Code, alongside minor amendments to the Comprehensive Plan. Ms. Kohlstedt explained that these updates, which were identified by staff over the preceding six months, are intended to correct typographical errors and incorporate language inadvertently omitted during the adoption of the new Zoning Code. After providing a comprehensive overview of the specific revisions proposed for each article and the Comprehensive Plan, she clarified the associated zoning regulations for the Commission.

John Lynk, 942 Whitfield Road, Northbrook, IL, addressed the Plan Commission regarding one of the proposed amendments to the Comprehensive Plan, specifically Item ‘g.’ under ‘Downtown Area Policies’ and requested that it be moved under ‘Overall Community Goals’. Mr. Lynk requested that greater emphasis be placed on this language and recommended that the sentence contained in Item G be relocated from the Downtown Area Policy section to the section entitled Overall Community Goals, which establishes the framework for the plan. He stated that doing so would benefit residents by fostering broader discussion within the community.

Ms. Kohlstedt advised that the community goals had been established in the original Comprehensive Plan and had undergone an extensive vetting process. For that reason, she declined to make such a change at this time, as the addition of a goal constitutes a substantive amendment. She noted that the Commission and the Board may request that the Village modify the existing goals or adopt new goals in the future. She further noted that other portions of the Comprehensive Plan will come before the Commission over time as staff continues to update the plan to align with the new Zoning Code.

Mr. Lynk further commented that the discussion of density within the Economic Development section is misplaced and suggested that the Village identify a more appropriate location within the Comprehensive Plan for that language. He also expressed concern that duplexes and cottage courts may be overlooked during the zoning code review.

Commissioner Morgen made a motion to close the public hearing; seconded by Commissioner Melnick. On roll call vote, all were in favor. (6 Yes Votes, 0 No Votes)

Commissioner Earley expressed support for the use of the term “Downtown Area” in lieu of identifying specific streets when referring to improvements. She further observed that the Village does not have a significant problem with realtors leaving signage in place after a property has been sold and, for that reason, did not support amending the code to add language regulating realtor signage, as no one appears to be abusing the current practice.

Commissioner Melnick made a motion to approve a resolution for Docket No. PCD-26-03, Village of Northbrook - amendments to the Zoning Code and the Northbrook Comprehensive Plan, as prepared and submitted by staff, subject to editing the description of the street names in the Comprehensive Plan to the Village Green Overlay; seconded by Commissioner Morgen. On roll call vote, all were in favor. (6 Yes Votes, 0 No Votes)

6) Review of Draft Resolutions

7) Discussion Topics

7.A) Presentation to Review Updated Metrics and Statistical Information on Downtown Northbrook

Michaela Kohlstedt, Deputy Director, presented an abbreviated video recording of a presentation originally delivered by Amy McEwan, Director of Development and Planning Services, at the April 28, 2026, Village Board meeting regarding the strategic vision of the Downtown Plan. Ms. Kohlstedt noted that this recorded presentation would be published on the Village website to ensure public access and transparency.

Ms. Kohlstedt emphasized that to realistically attract and sustain the desired commercial businesses that residents have expressed interest in seeing in the downtown, the Village must actively increase its residential density and the overall number of residents per square mile in the downtown area. She concluded by explaining the economic reality facing the district: commercial operators and national retailers heavily weigh localized demographic density and immediate rooftop counts when evaluating corporate expansion and determining market viability.

Commissioner Morgen observed that Northbrook’s Downtown is modest in size compared with that of other communities, such as Highland Park, and questioned how increasing housing opportunities would, in turn, attract additional businesses to expand into Northbrook.

Chairman Elisco provided historical context regarding the Village’s long-term planning efforts, highlighting the municipal initiatives of the early 2000s that ultimately culminated in the adoption of the 2012 Downtown Plan. He noted that this foundational plan

explicitly envisioned a vibrant Downtown core driven by higher-density, mixed-use developments that blend residential living with commercial activity. Elaborating on the economic implications of this vision, Chairman Elisco stated that adding 500 to 600 residential housing units to the Downtown area would serve as a critical catalyst for local economic development. He emphasized that residential density is a key metric utilized by major corporations when evaluating market viability and potential return on investment. Consequently, increasing the Downtown residential footprint would fundamentally strengthen Northbrook's competitive position, making the Village a substantially more attractive destination for corporate investment and commercial tenancy.

Commissioner Earley suggested that the Village explore utilizing municipal incentive funding in partnership with private property owners to incentivize them to develop their land to be more aligned to Village goals.

In response to a question raised by the Commission, Ms. Kohlstedt confirmed that while the Village is actively factoring families with children into its long-term planning—including the potential impact on local school district populations—the specific luxury residential projects scheduled for preliminary review at the upcoming May 26, 2026, Village Board meeting are not designed or anticipated to attract families with school-aged children.

Commissioner Pipito discussed the ongoing shortage of smaller single-family homes, specifically ranch homes, noting that many are currently being demolished to make way for larger homes with multiple floors. She suggested that the Village invest in refurbishing existing single-family housing stock, emphasizing that not all senior citizens desire to transition into multi-family residential buildings as they age.

Ms. Kohlstedt acknowledged the ongoing demand for single-family homes within the Village, and reminded the Commission that staff did present the idea of smaller homes in cottage courts and duplexes for those who don’t want to live in larger multi-family buildings, and those housing types were not well received and did not make it into the new Zoning Code for single family residential districts.

Chairman Elisco noted that senior residents within the community had previously expressed strong enthusiasm for the cottage court housing concept, highlighting it as an ideal alternative for down-sizing seniors who wish to remain in Northbrook without transitioning to traditional multi-family buildings. Furthermore, he strongly encouraged members of the Commission to review the recorded presentations and documentation for the 2012 Downtown Plan. He emphasized that the 2012 plan contains exceptional and forward-thinking design concepts that successfully integrate residential and retail spaces. Chairman Elisco explained that revitalizing these concepts is crucial for cultivating a vibrant, pedestrian-friendly downtown, ultimately creating a sustainable live-work environment that benefits both local business owners and residents.

Commissioner Morgen observed that the Downtown area has experienced steady

revitalization and improvement over the years, as evidenced by an increasing number of businesses choosing to locate within the district.

Ms. Kohlstedt advised the Commission that the Downtown area currently maintains ample parking capacity to support existing and proposed developments.

8) Remarks for the Good of the Order

Commissioner Walden encouraged members of the public to attend the forthcoming Art Fair.

9) Adjourn

Commissioner Walden made a motion, seconded by Commissioner Melnick to adjourn. On voice vote, a motion to adjourn passed unanimously. Adjourned at 9:20 p.m.

MEMORANDUM

To: Plan Commission
From: Deputy Director of Development & Planning Services Michaela Kohlstedt
Date: May 5, 2026
Subject: PCD-26-03: Amendments to the Zoning Code and Comprehensive Plan

Requested Action

On May 5, 2026 the Plan Commission will conduct a public hearing on an application filed by the Village President and Board of Trustees of Northbrook to consider a series of amendments to the following articles of the Village of Northbrook Zoning Code addressing typographical errors and inclusion of language that was inadvertently omitted from the new Zoning Code:

- Article 1: General Provisions
- Article 2: Ordinance Administration and Enforcement
- Article 3: Single-Family District Standards
- Article 4: Multi-Family and Mixed Use District Standards
- Article 5: Office District Standards
- Article 6: Commercial District Standards
- Article 7: Industrial District Standards
- Article 8: Institutional and Open Space District Standards
- Article 9: Overlay District Standards
- Article 10: General Development Standards
- Article 11: Sign Standards
- Article 14: Definitions

The Plan Commission will also consider minor amendments to the Introduction, Element One, and Downtown Area Polices of the Northbrook Comprehensive Plan. These minor amendments are part of a Village initiated project of reviewing the Comprehensive Plan to update the outdated demographic and land use data from the original adoption in 2010. In addition, community feedback has been collected as part of the Village Strategic Plan process and staff will make recommendations to closely align the goals of the Comprehensive Plan with the findings in the draft Village Strategic Plan. It should be noted that the Overall Goals of the Comprehensive Plan are very similar in sentiment and preferred action as those found in the draft Strategic Plan. Finaly, staff will adjust the format of the document to be consistent with the Village branding.

Proposed Zoning Code Amendments:

Article 1: General Provisions

This amendment is to include the provisions regarding the Zoning Map and Annexed Land which was unintentionally omitted from the original approval of the new Zoning Code. The proposed language is being carried over in its entirety and complete language as found in the 1988 Zoning Code.

Article 2: Code Administration and Enforcement

- Correcting a typo on page 10;

- clarification of the standards subject to administrative adjustments utilizing the language from the 1988 Zoning Code on page 13; and
- a clarification regarding the parking variation process on page 40.

Article 3: Single-Family Residential District Standards

- Amending Table 3-105-A: Principle Uses, to include Electric Vehicle charging stations with Fuel Sales on page 11;
- amending Table 3-106-A: Allowed Encroachments into Required Yards, to correct typos and provide clarification on pages 15-17;
- amending Table 3-107 A: Accessory Uses, to include Sport Courts as it was unintentionally omitted on page 19;
- correct a typographical error of order on page 24; and
- clarify language for parking trailers, boats, and other vehicles on page 27.

Article 4: Multi-Family Residential and Mixed-Use District Standards

- Amending Table 4-105 A: Principle Uses, to include Townhouse Dwellings as a Permitted use in the Village Green Residential and Commercial (VGRC) District as it was unintentionally omitted on page 13;
- amending Table 4-105 A: Principle Uses, to include Electric Vehicle charging stations with Fuel Sales on page 16;
- amending Table 4-106-A: Allowed Encroachments into Required Yards, to correct typos and provide clarification on pages 31-33; and
- amending Table 4-107 A: Accessory Uses to include Sport Courts as it was unintentionally omitted on page 35.

Article 5: Office District Standards

- Amending Table 5-105-A: Principle Uses, to include Electric Vehicle charging stations with Fuel Sales on page 11;
- amending Table 5-106-A: Allowed Encroachments into Required Yards, to correct typos and provide clarification on pages 25-27;
- amending Table 5-107 A: Accessory Uses, to correct typos on page 28 and add Sport Courts on page 29; and
- correct typos and errors on pages 33-34.

Article 6: Commercial District Standards

- Amending Table 6-105-A: Principle Uses, to include Electric Vehicle charging stations with Fuel Sales on page 12;
- amending Table 6-106-A: Allowed Encroachments into Required Yards, to correct typos and provide clarification on pages 25-27; and
- amending Table 6-107 A: Accessory Uses, to correct typos on page 28 and add Sport Courts on page 28.

Article 7: Industrial District Standards

- Amending Table 7-105-A: Principle Uses, to include Electric Vehicle charging stations with Fuel Sales on page 9;
- amending Table 7-106-A: Allowed Encroachments into Required Yards, to correct typos and provide clarification on pages 22-24;
- amending Table 7-107 A: Accessory Uses, to correct typos on page 28 and add Sport Courts on page 26;
- amending 7-107-B.3 to include item “g” on page 29 consisting of the following language which was unintentionally omitted in the new code, but existed in the 1988 Zoning Code:

  ***Accessory Sale of Merchandise Indoors**. When located indoors in a property, the square footage area of the accessory retail sales shall not exceed 10% of the floor area of the*

building, or 1,000 square feet, whichever is less.

Article 8: Institutional and Open Space District Standards

- Amending Table 8-105-A: Principle Uses, to include Electric Vehicle charging stations with Fuel Sales on page 11;
- amending Table 8-106-A: Allowed Encroachments into Required Yards, to correct typos and provide clarification on pages 21-23; and
- amending Table 8-107 A: Accessory Uses, to correct typos on page 28 and add Sport Courts on page 24.

Article 9: Overlay District Standards

- Amending Table 9-105-A: Principle Uses, to include Electric Vehicle charging stations with Fuel Sales on page 8.

Article 10: General Development Standards

- Clarifying language stating when a parking variation is possible versus a special permit for parking reduction on page 10;
- amending Table 10-106 G(3)(c) to correct typos on page 38; and
- amending Table 10-108-B-2 to correct typos and provide language that was unintentionally omitted in the new code pertaining to fences on lots on major thoroughfares, as well as fence height on residential properties adjacent to industrial properties which was also unintentionally omitted on pages 46-48.

Article 11: Sign Standards

- Correct typos in Table 11-102-D on page 6;
- Correct typos on page 9;
- Provide clarification on page 10;
- Modify illumination standards for drive-through signage to include both external and internal illumination choices on page 15;
- Modify illumination standards for pylon signs to include both internal or external illumination on page 22;
- Amendment to the duration of temporary banners pertaining to construction signage to allow for the temporary banner to remain through the duration of construction;
- Clarify language for all temporary mounted banner signs for maximum area which is consistent across all districts on pages 25-26; and
- Add the RS District to the list of regulating districts for post and panel signs on page 30;
- Clarify language to temporary post sign display duration for properties marketed for sale or for lease on page 32.

Article 14: Definitions

- Amending the definition of Public Cultural and Community Facilities to include the community fitness component of such uses.

There are no amendments proposed that will change the original intent of the recently adopted Zoning Code, and it is staff's goal that the proposed amendments recommended in this report capture any language that was unintentionally omitted in the drafting of the new Zoning Code with consideration made to the previous 1988 Zoning Code.

Proposed Comprehensive Plan Amendments

The Comprehensive Plan for Northbrook, titled A Plan for Northbrook, was originally adopted on December 14, 2010 with several minor amendments over the last fifteen years. Majority of the amendments to the

Comprehensive Plan were to the Future Land Use Map to modify parcel designations as land was developed over the last fifteen years. The plan was amended in December of 2020 to provide language which would be consistent with the affordable housing ordinance.

To date, the Village has not performed an overall review of the document in its entirety to update data and tables which consist of information typically updated every five to ten years. The population graphs, and depictions of vacant and available land for potential redevelopment have changed over time and merit updating. Along the lines of growth and progress in the community, the Village also adopted a new branding policy consisting of a new logo and color palette in 2023.

Lastly, the Village conducted a community wide survey and has drafted its first Village Strategic Plan. During the development of the Strategic Plan, the Village heard from numerous residents and business owners regarding insights into the future of Northbrook. Based upon the draft Strategic Plan, several minor amendments have been proposed to the Comprehensive Plan to be consistent with the Village Strategic Plan.

All three sections proposed to be updated include format changes indicative of utilizing the current Village branding standards.

The proposed modifications to the ***Introduction*** includes:

- Correct typos to indicate location of diagram, and further clarifying language on page 2;
- Inclusion of an updated graph depicting the Northbrook population over time on page 3;
- An updated map depicting Existing Vacant and Potential Redevelopment Sites in Northbrook as of May 1, 2206 on page 4; and
- An updated diagram utilizing the Village branding colors on page 6.

The proposed modifications to ***Element One: Overall Community Goals*** includes:

- Added language to Overall Goal 1 to align with language used in a similar goal found in the draft Strategic Plan.

It should be noted that the Overall Goals of the Comprehensive Plan are very similar in sentiment and preferred action as those found in the draft Strategic Plan which is why there were no further amendments proposed to this article.

The proposed modifications to the Downtown Area Policies (found in a portion of Element 9) includes:

- Clarifying language to existing goals to better align with what the draft Strategic Plan included; and
- Additional goals and action items, that can be included in response to the draft Strategic Plan.

Included with the proposed amendment documents for consideration is a draft resolution recommending approval of the proposed amendments as presented should the Plan Commission wish to make a recommendation following the public hearing. The draft resolution can be amended on the floor if the Commission finds it necessary to propose any additional language modifications.

APPROVED

RESOLUTION NO. 26-PC-06

VILLAGE OF NORTHBROOK PLAN COMMISSION
DOCKET NO. PCD-26-03
PROPOSED AMENDMENTS TO THE ZONING CODE

WHEREAS, an application has been filed by the President and Board of Trustees of the Village of Northbrook (the "Applicant") to consider an amendment to Table 10-108-B-2(a) of Article 10 General Development Standards of the Village of Northbrook Zoning Code (2025);

WHEREAS, the Applicant has filed an application (Docket No. PCD-26-03) with the Village of Northbrook requesting the amendment to the current Zoning Code of the Village of Northbrook and Comprehensive Plan; and

WHEREAS, a public notice for this docket was duly published on May 29, 2026 on the *Village of Northbrook Public Notice Webpage* and a public hearing was held at the Plan Commission's regular meetings on June 16, 2026; and

WHEREAS, the Plan Commission has considered all the evidence presented to it, including, but not limited to, the following:

1. Staff reports prepared by the Village of Northbrook Development and Planning Services Department submitted for the June 16, 2026 Plan Commission meeting;
2. Testimony on behalf of the Applicant; and
3. All written and oral testimony concerning the application and the proposed Comprehensive Amendment.

NOW, THEREFORE, BE IT RESOLVED by the Plan Commission of the Village of Northbrook, Cook County, Illinois, THAT:

1. **Findings:** With respect to Docket No. PCD-26-03, the Plan Commission hereby finds that amendment to the current Zoning Code of the Village of Northbrook **is consistent** and meets the standards in Article 2-117.D. of the Northbrook Zoning Code.

2. **Recommendations:** The Northbrook Plan Commission does hereby recommend to the President and Board of Trustees of the Village of Northbrook **approval** of Docket No. PCD-26-03 based on the findings established herein.

ADOPTED THIS 16th day of June 2026.

AYES: (9) Braiman, Earley, Halperin, Karavitis, Melnick, Morgen, Pipito, Walden, Elisco

NAYS: (0)

ABSENT: (0)

ABSTAIN: (0)

__/s/ Steven Elisco _____
Steven Elisco, Chairman
Northbrook Plan Commission

ATTEST:

_____/s/ Amy McEwan _____
Amy McEwan, Director
Development and Planning Services

MEMORANDUM

To: Plan Commission
From: Deputy Director of Development & Planning Services Michaela Kohlstedt
Date: June 16, 2026
Subject: PCD-26-03: Amendments to the Zoning Code and Comprehensive Plan

Requested Action

On June 16, 2026 the Plan Commission will conduct a public hearing on an application filed by the Village President and Board of Trustees of Northbrook to consider an amendment to Article 10 General Development Standards of the Village of Northbrook Zoning Code addressing a typographical error and inclusion of language that was inadvertently omitted from Table 10-108-B-2(a) of the Zoning Code.

This amendment was not included in the series of amendments presented previously on May 19, 2026 for consideration. Following consideration by the Plan Commission, the item will be included with the May 19 recommendation of approval for amendments to the Zoning Code for Board of Trustees consideration.

Proposed Zoning Code Amendment:

In the prior Zoning Code, language was included that allowed corner side yard lots abutting another corner side yard to have a greater fence height. The language excerpt from the previous Zoning Code is shown below highlighted. That language was inadvertently omitted from the recently adopted Zoning Code.

Location	Maximum Height of Fence
Single Family Residential Districts:	
Front and corner side yards, except as provided below:	3 feet
That particular yard of a through lot that abuts any of the following streets (unless said yard is adjacent to the front yard of a lot other than a through lot): Willow, Sanders, Waukegan, Dundee, Walters west of Crestwood, Landwehr, Pfingsten, Techny, Voltz, Grant and Sunset Ridge	6 feet
The corner side yard of a lot immediately adjacent to and abutting another lot with a corner side yard	6 feet
All other yards when abutting a residential use	6 feet
All other yards when abutting a nonresidential use	8 feet

The highlighted area below is the proposed amendment for consideration to include the exact language from the prior Zoning Code.

Table 10-108-AB-2(a) Maximum Fence and Wall Height						
Property Line	**District**					
	R-1, R-2 Districts	*R-3, R-4, R-5 Districts*	*R-6, R-7, R-8, RS, MFRC, RLC, VGRC Districts*	*O-1, O-2, O-3, O-4, C-2, C-3, C-4, C-5 Districts*	*ICS, I-1, I-2 Districts*	*I-B, OS Districts*
Front [1]	5 feet [~~23~~]	4 feet	4 feet	prohibited	6 feet ~~[3]~~	6 feet [4]
Corner Side [~~1~~2]	5 feet [~~23~~]	4 feet	4 feet	prohibited	6 feet ~~[3]~~	6 feet [4]
Interior Side	6 feet [4]	6 feet [4]	6 feet	8 feet	8 feet	8 feet ~~[3]~~ [4]
Rear	6 feet [4][5]	6 feet [4] [5]	6 feet [5]	8 feet	8 feet	8 feet ~~[3]~~ [4]
Notes						
[1] Through lot fences on Willow, Sanders, Waukegan, Dundee, Walters (west of Crestwood), Landwehr, Pfingsten, Techny, Voltz, Grant, or Sunset Ridge may have a height up to 6 feet.						
[~~1~~2] ~~If facing the front yard of a residential lot(s) across the street, front yard standards shall apply.~~The corner side yard of a lot immediately adjacent to and abutting another lot with a corner side yard may have a height up to 6 feet.						
[~~23~~] Driveway gates installed within the fence may be up to 8 feet in height.						
~~[3] Fence or wall shall be setback a minimum of five feet from the property line and materials shall be restricted to architectural block, masonry, stone, or stucco on masonry only.~~						
[4] The Village Manager may approve, as an Administrative Adjustment (Section 2-104) an increase in fence height up to 12 feet to accommodate outdoor recreation areas. Sport courts with a 12 foot fence shall be set back a minimum of 10 feet from all lot lines.						
[5] Residential zoned properties adjacent to non-residential zoned properties shall be permitted a fence height up to 8 feet in rear yards.						

The above highlighted language is the only amendment being considered in this public notice as all other tracked edits already underwent a public hearing process on May 19 whereupon the Plan Commission found the proposed amendments appropriate and recommended approval.

Included with the proposed amendment documents for consideration is a draft resolution recommending approval of the proposed amendment as presented should the Plan Commission wish to make a recommendation following the public hearing. If the Commission should vote on the draft resolution, it would be **Resolution No. 26-PC-06** recommending approval of Docket No. PCD-26-03.

JULY 14, 2026

PCD-26-03: Zoning Code & Comprehensive Plan Amendments

Village of Northbrook

125

PROPOSED ZONING CODE AMENDMENTS

NORTHBROOK ZONING CODE

PROPOSED AMENDMENTS – Article 1: General Provisions

5. **Zoning Map.**

a. Map Incorporated. The location and boundaries of the zoning districts established by this Code are as shown on a map entitled "Zoning Map of the Village of Northbrook, Illinois," hereafter referred to as the Zoning Map, which is by this reference incorporated as part of this Code. All notations, references and other information shown on the Zoning Map, and all amendments thereto, shall be as much a part of this Code as if specifically set forth and literally described herein.

b. Omitted Land. It is the intent of this Code that the entire area of the Village, including all land and water areas, be included in the districts established by this Code. Any area lying within the Village but not shown on the Zoning Map as being included in such a district shall be deemed to be, and it is hereby, classified in the R-1 Single Family Residential District.

c. District Boundaries. In the event that any uncertainty exists with respect to the intended boundaries of the various districts as shown on the Zoning Map, the following rules shall apply:

i. The district boundaries are the center lines of tollways, expressways, highways, streets, alleys, waterways, railroads and other rights-of-way unless otherwise indicated. Where designation of a boundary line on the Zoning Map coincides with the location of any such right-of-way, the center line of such right-of-way shall be construed to be the boundary of such district.

ii. Where a district boundary does not coincide with the location of any right-of-way but does coincide with a lot line, such lot line shall be construed to be the boundary of such district.

iii. Where a district boundary does not coincide with the location of any right-of-way or lot line, the district boundary shall be determined by the use of the scale shown on the Zoning Map.

iv. The exact location of the district boundaries of the Flood Hazard Overlay District shall be determined as provided in Section 8-205 of this Code.

6. **Annexed Land.**

a. Annexation of Fully Developed Land. All land which shall, after the effective date of this Code, be annexed to the Village and which shall, on the date of such annexation, be fully developed and have no area sufficient for the creation of a developable zoning lot shall upon such annexation be automatically classified into the Village Zoning District that is, in the opinion of the Board of Trustees, most compatible with the development existing on and around such land.

b. Annexation of Undeveloped or Partially Developed Land. All land which, after the effective date of this Code, shall be annexed to the Village and which, on the date of such annexation, shall be undeveloped or partially developed and have sufficient area for the creation of a developable zoning lot, shall upon such annexation be automatically classified in the R-1 Single Family Residential District.

~~d.~~c. Application for Different Classification. When any land is classified pursuant to this Section, it shall remain so classified unless and until an application to amend such classification is filed and granted pursuant to Article 2 of this Code, which application may, however, be filed prior to or contemporaneously with the annexation of the land in question.

NORTHBROOK ZONING CODE

PROPOSED AMENDMENTS – Article 2: Ordinance Administration and Enforcement

2. **Pre-Application Meeting**.

   a. The purpose of a pre-application meeting is to provide an opportunity for the applicant and Village staff to review applicable submittal requirements, procedures, and schedules and discuss development requirements.

   b. A pre-application meeting is required for all application types unless waived by the Village Manager ~~of Development and Planning Services~~.

Paragraph 2-114 B1 entitled "Prohibited Variances":

1. **Prohibited Variances**.

   a. In no event shall a Variance be considered which would allow the establishment of a use which is not otherwise allowed in a district, or which would change the district classification or the district boundary of the property in question.

   b. No parking variance shall be considered in excess of 25%; for such request a special permit shall be requested pursuant to Section 10-102-F-3(b)

   ~~b.~~c. No Variance shall be considered that is intended as a temporary measure only.

   ~~c.~~d. No Variances of the Flood Hazard Overlay District regulations shall be considered.

1. **Standards Subject to General Review Criteria**.

   a. Section 3-106-A: Single-Family District dimensional standards less than 1' for a front and corner side setback, side setback, and less than 5' for a rear setback; and dimensional standards encroachments: allowed encroachments into required yard,

   b. Section 4-106-A: Multi-Family and Mixed-use District dimensional standards less than 1' for a front and corner side setback, side setback, and less than 5' for a rear setback; and dimensional standards encroachments: allowed encroachments into required yard setbacks,

   c. Section 5-106-A: Office District dimensional standards less than 1' for a front and corner side setback, side setback, and less than 5' for a rear setback; and dimensional standards encroachments: allowed encroachments into required yard setbacks,

   d. Section 6-106-A: Commercial District dimensional standards less than 1' for a front and corner side setback, side setback, and less than 5' for a rear setback; and dimensional standards encroachments: allowed encroachments into required yard setbacks,

   e. Section 7-106-A: Industrial District dimensional standards less than 1' for a front and corner side setback, side setback, and less than 5' for a rear setback; and dimensional standards encroachments: allowed encroachments into required yard setbacks,

   f. Section 8-106-A: Institutional and Open Space District dimensional standards less than 1' for a front and corner side setback, side setback, and less than 5' for a rear setback; and dimensional standards encroachments: allowed encroachments into required yard setbacks,

NORTHBROOK ZONING CODE
PROPOSED AMENDMENTS – MULTIPLE DISTRICTS

Use	Additional Regulation	R-1	R-2	R-3	R-4	R-5
Commercial Kitchen						
Contractor Facility						
Crematorium						
Dry Cleaning Facility, Processing On-Site						
Building Material, Machinery, and Equipment Sales or Storage						
Fuel Sales (inclusive of EV charging stations)						
Industry, Heavy						

Table 3-107-A: Accessory Uses by Single-Family Residential District

Use	Additional Regulation	R-1	R-2	R-3	R-4	R-5
Solar Energy Collection System, Canopy Mounted	3-107-B-4	P	P	P	P	P
Solar Energy Collection System, Ground Mounted	3-107-B-5	P	P	P	P	P
Solar Energy Collection System, Roof Mounted	3-107-B-6	P	P	P	P	P
Sport Court	3-107-B-7	P	P	P	P	P

NORTHBROOK ZONING CODE
PROPOSED AMENDMENTS – MULTIPLE DISTRICTS

Encroachment Type	Allowed Location	Limitations of Encroachment
Accessibility Ramps and Fire Escapes required by the Illinois State Building Code	any required yard	Shall be a minimum of five feet from the property line unless otherwise approved by the Village Manager as an Administrative Modifications per Section 2-104.
Air Conditioning Units, Heat Pumps, Generators, and similar equipment	rear and interior side yard	Shall be a minimum of five feet from any lot line.
Antennae	rear and interior side yard	Shall be a minimum of three feet from any lot line.
Basketball equipment	any required yard	A maximum of one per front yard shall be allowed. Shall be a minimum of five feet from side and rear lot lines and ten feet from a front lot line.
Bay Windows and Balconies	front and corner side yard	Shall extend no more than three feet from the applicable elevation of the building and at least five feet from the property line. May not have any foundation or footing and may only project from a façade.
	interior side and rear yard	Shall be a ~~minimum~~ maximum of three feet from the applicable building elevation. May not have any foundation or footing and may only project from a façade.
Driveways and Walkways	any required yard	• Shall comply with the standards of Section 10-102-C. • Shall be a minimum of two feet from the interior side property line.
Fences, Walls, and Berms	any required yard	Shall comply with the standards of Section 10-108.
Flagpoles	any required yard	Shall be a minimum of five feet from the property line.
Uncovered and Unenclosed Steps and Stairs	front ~~and~~, corner side, and rear yard	May encroach up to six feet from the applicable elevation of the building and no closer than five feet to the property line, whichever is greater.
Uncovered Decks, Patios, Stoops and similar Features	front, interior, and corner side yard	• May encroach up to five feet into a required yard and no closer than five feet to the property line, whichever is less. • May not exceed 30 inches in height above the average finished grade.
	rear and side yard	• Shall be a minimum of five feet from the property line. • May not exceed 30 inches in height above the average finished grade.

NORTHBROOK ZONING CODE

PROPOSED AMENDMENTS – Article 3: Single Family

Paragraph 3-107 B, entitled "Accessory Use Supplemental Standards"

7. **Sport Court.** Outdoor Sport Court accessory to any dwelling located in any single family residential district shall be screened by a perimeter landscaped open space equal in width to the applicable required yard or ten (10) feet, whichever is less, and consisting of an opaque fence, wall or densely planted evergreen hedge of not less than five (5) feet in height. Such screening shall be provided on all sides of such facility visible from any abutting property or any public or private street.

Paragraph 3-108 B3, entitled "Parking of Trailers, Boats, and Other Vehicles."

3. **Parking of Trailers, Boats, and Other Vehicles.** Trailers, boats, and other vehicles ~~shall not be parked in the front yard or corner side yard.~~ shall not be connected to utilities, occupied, or located in front of a principal structure within these districts.

NORTHBROOK ZONING CODE
PROPOSED AMENDMENTS – Article 4: Multi-Family

Table 4-103 D, entitled "VGRC District Dimensional Standards"

Table 4-103-D VGRC District Dimensional Standards				
1 = Single-Family Detached		*3 = Townhouse;*		
2 = Multi-Unit Building, All Units;		*4 = All Other Uses*		
	1	*2*	*3*	*4*
Lot Standards				
Lot Area, Minimum (sq ft)	25,000	25,000	25,000	25,000
Lot Width, Minimum (ft)	40	18	100	40
Yard Setbacks				
Front, Minimum (ft)	20	10	25	10
Corner Side, Minimum (ft)	20	10	12	10
Interior Side, Minimum (ft)	5	5	12	5
Rear, Minimum (ft)	20	15	20	15
Building Standards				
Height, Maximum (ft)	30	45	45	45 [1]
Height, Maximum (stories)	2	4	4	4
Lot Coverage (%)	60	80	75	N/A
Note				
[1] A Planned Development may, by right, be constructed to a maximum height of ~~64~~ 65 feet or 5 stories, whichever is less.				

Subparagraph 4-104 E1(b), entitled "Allowance"

1. **Allowance.**
   a. Principal uses are allowed by district as established in Table 4-105-A Principal Uses.
   b. A parcel may contain one or more principal uses or principal buildings in the RS, MFRC, RLC, and VGRC Districts only. The establishment of multiple principal uses or principal buildings on a parcel shall require a Special Permit as specified in Section 2-~~112~~113.
   c. A development with multiple principal uses shall include only those principal uses designated in Table 4-105-A Principal Uses as allowed in the applicable zoning district, and each principal use shall be subject to all applicable supplemental standards.

Table 4-105-A: Principal Uses by Multi-Family Residential District

Use	Additional Regulation	R-6	R-7	R-8	RS	MFRC	RLC	VGRC
Residential Uses	Additional Regulation	R-6	R-7	R-8	RS	MFRC	RLC	VGRC
Community Residences (up to 8 residents)	4-105-B-1	P	P	P	P			P
Dwelling, Cottage Court	4-105-B-2	P	P	P	P	P	P	
Dwelling, Duplex	4-105-B-3	P	P	P	P		P	
Dwelling, Single-Family Detached		P	P	P	P		P	
Dwelling, Townhouse	4-105-B-4	P	P	P	P	P	P	P
Dwelling, Triplex/Quadplex	4-105-B-5	P	P	P	P	P	P	

NORTHBROOK ZONING CODE

PROPOSED AMENDMENTS – Article 5: Office

Table 5-107-A: Accessory Uses by Office District					
Use	Additional Regulation	O-1	O-2	O-3	O-4
Accessory Dwelling Unit (ADU), Attached					
Accessory Dwelling Unit (ADU), Detached					
Accessory Structure	5-107-B-1	P	P	P	P
ATM		P	P	P	P
Day Care Nursery		P			
Drive-Through Facility	5-107-B-2		P	P	P
Electric Vehicle Charging Station – Commercial	5-107-B-3	P	P	P	P
Garden		P	P	P	P
Home Based Daycare					
Home Occupation					
Outdoor Display - Permanent	~~5-107-B-4~~				
Sale of Merchandise – Permanent	~~5-107-B-4~~				

Paragraph 5-107 B4, entitled "Outdoor Display/Sale of Merchandise/Outdoor Seating for Eating and Drinking Uses."

4. ~~Outdoor Display / Sale of Merchandise /~~ **Outdoor Seating for Eating and Drinking Uses.**

   a. **Principal Use**. Outdoor seating~~/display~~ shall be allowed accessory to a legally conforming principal use only.

   b. **Location**. Accessory outdoor seating~~/display~~ areas may be located:

      i. On a public sidewalk directly in front of the principal use to which the outdoor seating is accessory so long as:

         a) A clear pathway at least five feet wide is maintained to allow through public pedestrian traffic along the sidewalk and from the sidewalk into the entrance to the establishment. A greater width may be required by the Village Manager to ensure the safe and convenient flow of pedestrian traffic, and

         b) A clear separation of at least five feet is maintained from any alley, crosswalk, fire hydrant, or similar public or emergency access feature in or near the sidewalk. A greater clear distance may be required by the Village Manager to ensure use of the public or emergency access features.

      ii. In a parking lot so long as:

         a) No more than 10 percent of the required parking spaces (per Section 10-102-D) are utilized,

         b) The outdoor seating~~/display~~ area is directly accessible from inside the principal use to which it is accessory, and

         c) The outdoor seating~~/display~~ area is surrounded by a barrier with a minimum height of three feet and maximum height of four feet.

NORTHBROOK ZONING CODE
PROPOSED AMENDMENTS – Article 7: Industrial

Paragraph 7-107 B3, entitled "Outdoor Display/Sale of Merchandise/Outdoor Seating for Eating and Drinking Uses"

f. **License Required.** When located on public property a license agreement shall be obtained from the Village for proof of liability insurance and recorded with Cook County.

~~f.~~g. **Accessory Sale of Merchandise Indoors.** When located indoors in a property, the square footage area of the accessory retail sales shall not exceed 10% of the floor area of the building, or 1,000 square feet, whichever is less.

NORTHBROOK ZONING CODE

PROPOSED AMENDMENTS – Article 10: General Development Standards

Subsection 10-102 D, entitled "Vehicle Parking Amount."

D. **Vehicle Parking Amount**. Table 10-102-D establishes the minimum number of required vehicle parking spaces per use. The maximum number of vehicle parking spaces allowed per use shall be 10 percent in excess of the minimum requirement.

Electric Vehicle charging stations may be located in required off-street parking spaces and may be counted toward satisfying minimum off-street parking space requirements.

Table 10-102-D, entitled "Minimum Vehicle Parking Requirements"

Table 10-102-D: Minimum Vehicle Parking Requirements	
Use	Minimum Parking Requirement
Car Wash	1 / 250 sq ft
Commercial Kitchen	1 / 1,000 sq ft
Contractor Shop	
Crematorium	
Dry Cleaner, Processing On Site	
Fuel Sales (inclusive of Electric Vehicle charging stations)	1 / 250 sq ft

Paragraph 10-102 F3, entitled "Reduction of Required Number of Parking Spaces in Excess of Allowable Parking Variation."

3. **Reduction of Required Number of Parking Spaces ~~in Excess of Allowable Parking Variation~~.**

a. **Reduction Allowed by Variation**. A parking reduction up to 25% of the required parking may, by Variation grated pursuant to Section 2-114 of this Code, be granted.

~~a.~~b. **Reduction ~~Authorized~~Allowed by Special Permit**. Notwithstanding any other provision of this Section, the Board of Trustees may, by Special Permit granted pursuant to Section 2-~~112~~-113 of this Code, reduce the total number of off-street parking spaces required pursuant to Subsection 10-102-D of this Section in excess of the allowable 25% parking variation (Section 10-102-F-3(a)).

Table 10-106-G3(c), entitled "Transition Landscape Area Type C Requirements"

Table 10-106-G(3)(c). Transition Landscape Area Type C Requirements			
Specification		Option 1	Option 2
a.	Minimum Width [1]	20 feet	15 feet
b.	Fence/Wall [2]	optional	required
c.	Berm [3]	optional	optional
Minimum Number of Landscape Elements per 100 Linear Feet of Landscape Area Length			
d.	Evergreen Tree	3 ~~[4]~~	3 ~~[4]~~
e.	Canopy Tree	2	2
f.	Understory Tree	1	0
g.	Shrubs/Native Grasses	36	20
Notes			
[1] Required yard setbacks may be utilized for perimeter buffer landscape.			
[2] Fences/walls shall meet the standards established in Section 10-108.			
[3] Berms shall meet the standards of Section 10-108 and shall be installed, excluding the planting of required landscape material, at the time of site grading and prior to the commencement of any construction activity.			

NORTHBROOK ZONING CODE

PROPOSED AMENDMENTS – Article 10: General Development Standards

Table 10-108-B2(a), entitled "Maximum Fence and Wall Height"

Table 10-108-AB-2(a) Maximum Fence and Wall Height						
Property Line	**District**					
	R-1, R-2 Districts	*R-3, R-4, R-5 Districts*	*R-6, R-7, R-8, RS, MFRC, RLC, VGRC Districts*	*O-1, O-2, O-3, O-4, C-2, C-3, C-4, C-5 Districts*	*ICS, I-1, I-2 Districts*	*I-B, OS Districts*
Front [1]	5 feet [~~2~~3]	4 feet	4 feet	prohibited	6 feet ~~[3]~~	6 feet [4]
Corner Side [~~1~~2]	5 feet [~~2~~3]	4 feet	4 feet	prohibited	6 feet ~~[3]~~	6 feet [4]
Interior Side	6 feet [4]	6 feet [4]	6 feet	8 feet	8 feet	8 feet ~~[3]~~ [4]
Rear	6 feet [4][5]	6 feet [4] [5]	6 feet [5]	8 feet	8 feet	8 feet ~~[3]~~ [4]
Notes						
[1] Through lot fences on Willow, Sanders, Waukegan, Dundee, Walters (west of Crestwood), Landwehr, Pfingsten, Techny, Voltz, Grant, or Sunset Ridge may have a height up to 6 feet.						
[~~1~~2] ~~If facing the front yard of a residential lot(s) across the street, front yard standards shall apply.~~The corner side yard of a lot immediately adjacent to and abutting another lot with a corner side yard may have a height up to 6 feet.						
[~~2~~3] Driveway gates installed within the fence may be up to 8 feet in height.						
~~[3] Fence or wall shall be setback a minimum of five feet from the property line and materials shall be restricted to architectural block, masonry, stone, or stucco on masonry only.~~						
[4] The Village Manager may approve, as an Administrative Adjustment (Section 2-104) an increase in fence height up to 12 feet to accommodate outdoor recreation areas. Sport courts with a 12 foot fence shall be set back a minimum of 10 feet from all lot lines.						
[5] Residential zoned properties adjacent to non-residential zoned properties shall be permitted a fence height up to 8 feet in rear yards.						

NORTHBROOK ZONING CODE

PROPOSED AMENDMENTS – Article 11: Signs

Table 11-102-D, entitled "Allowed Sign Types per Office, Commercial, Industrial, Institutional, and Open Space Districts"

Table 11-102-D: Allowed Sign Types per Office, Commercial, Industrial, and Institutional District

Key: • = Sign Allowed, Permit Required; ○ = Sign Allowed, No Permit Required Blank = Sign Prohibited	References	O-1	O-2	O-3	O-4	C-2	C-3	C-4	C-5	IQS	I-1	I-2	IB	OS
Permanent Building Sign Standards														
Awning Sign	11-102-A-1	•	•	•	•	•	•	•	•	•	•	•	•	•
Projecting Sign	11-102-A-15	•	•	•	•	•	•	•	•	•	•	•	•	
Wall Sign	11-102-A-22	•	•	•	•	•	•	•	•	•	•	•	•	•
Window Sign, Permanent	11-102-A-23	•	•	•	•	•	•	•	•	•	•	•	•	•
Permanent Ground Sign Standards														
Drive-Through Sign	11-102-A-3		•	•	•	•	•	•	•					
On-Site Circulation Safety Sign	11-102-A-11	•	•	•	•	•	•	•	•	•	•	•	•	•
Monument Sign	11-102-A-~~9~~6	•	•	•	•	•	•	•	•	•	•	•	•	•
Neighborhood Entry Sign	11-102-A-~~13~~9													
Post Sign, Permanent	11-102-A-~~16~~13	•	•	•	•	•	•	•	•	•	•	•	•	•
Pylon Sign	11-102-A-16	•	•	•	•	•	•	•	•	•	•	•	•	•

Subsection 11-104 E, entitled "Electronic Message Boards"

E. **Electronic Message Boards**. Electronic message boards shall only be allowed as permitted sign types in the C-~~1~~2, I-1, IB and OS Districts and subject to the standards established below.

g. No electronic message boards shall be located within 1,000 lineal feet of any other sign with an electronic message board~~, and no electronic message board shall be within 350 feet of a dwelling unit~~.

h. Any sign with an electronic message board must satisfy all Illinois Department of Transportation (IDOT) requirements and regulations for outdoor advertising.

i. In addition to the above conditions, any sign with an electronic display that is less than 1,000 lineal feet from any other sign with an electronic message board, or ~~to be~~is located within 250 feet of a principal residential structure shall ~~also~~ require the issuance of a Special Permit pursuant to Section 2-113 of this Code.

NORTHBROOK ZONING CODE
PROPOSED AMENDMENTS – Article 11: Signs

Paragraph 11-106 A6, entitled "Illumination"

6. **Illumination.** Internal or external illumination of monument signs is permitted. ~~Drive-through signs shall be internally illuminated only.~~

Paragraph 11-108 B4, entitled "Maximum Number of Sign Faces"

4. **Maximum Number of Sign Faces.**
   a. **MFRC, RLC, RS, and VGRC Districts.** Post and panel signs shall have a maximum of one sign face.
   b. **Office, Commercial, Industrial, Institutional, and Open Space Districts.** Post and panel signs shall have a maximum of two sign faces.

Paragraph 11-108 C7, entitled "Duration of Display"

7. **Duration of Display.** The following standards apply unless otherwise required by state law or regulation, such as the Illinois Municipal Code (65 ILCS 5/11-13-1). If the property on which the sign shall be placed is actively marketed for sale or lease the duration of display shall be until the property is no longer actively marketed for sale or lease so long as all maintenance requirements are met (Section 11-110).

Paragraph 11-106 F5, entitled "Illumination"

5. **Illumination.** Internal or external illumination of monument signs is permitted. ~~Pylon signs shall be internally illuminated only.~~

Subparagraph 11-107 B1(b)i, entitled "Duration of Display"

i. Mounted banner signs shall have a duration of display of a maximum of 30 days with an exception for permitted temporary construction banners not to exceed the duration of construction.

Subparagraph 11-107 B3(a), entitled "Maximum Area"

3. **All Mounted Banner Signs.**
   a. **Maximum Area.**
      ~~i. **Single-Family, Multifamily, and Mixed-Use Districts.**~~
         ~~a) **MFRC, RLC, and VGRC Districts.** Mounted banner signs shall have a maximum area of 25 square feet.~~
         ~~b) **All Other Districts.** Mounted banner signs are not permitted.~~
      ii.i. ~~**Office, Commercial, Industrial, Institutional, and Open Space Districts.**~~ Mounted banner signs shall have a maximum area of 25 square feet.

Subparagraph 11-107 B3 (e), entitled "Location"

e. **Location.**
   i. Mounted banner signs shall be located on a building wall, meeting the location standards for permanent wall signs (Table 11-102-D).
   ii. Mounted banner signs shall be located on a fence meeting all standards of Section 10-108 with an exclusion for permitted construction fences which may exceed the standards of Section 10-108.

NORTHBROOK ZONING CODE
PROPOSED AMENDMENTS – Article 14: Definitions

Section 14-106, entitled "E Definitions"

C. **Electric Vehicle.** A vehicle that operates, either partially or exclusively on electrical energy from a charging station or other electrical energy source that is stored in the vehicle's batter for propulsion purposes.

Subsection 14-107 W, entitled "Fuel Sales"

W. **Fuel Sales.** Any building or portion thereof or premises used for dispensing or offering for sale at retail any automobile fuels or oils; having pumps and storage tanks; also, where battery, tire and other similar services are rendered, but only if rendered wholly within lot lines. Included are solar and/or electric charging stations for Electric Vehicles. Excluded are open sales lots, parking, storing and sale of automobiles or any other commodity not incidental to fuel sales.

Subsection 14-117 T, entitled "Public Cultural and Community Facilities"

T. **Public Cultural and Community Facilities.** A public facility for the development, production, and presentation of the visual and performing arts, including live theater, dance, music, painting, sculpture, ~~and~~ crafts, and community fitness activities.~~.~~

PROPOSED COMPREHENSIVE PLAN AMENDMENTS

NORTHBROOK ZONING CODE
PROPOSED AMENDMENTS - Overall

Introduction

What is a Comprehensive Plan?

The Comprehensive Plan is a policy document outlining the community's intentions regarding the physical development of the Village. It is neither a legislative nor a regulatory document. It offers guidelines and concepts to assist the community and elected officials in the process of their day-to-day development decision making. The form and substance of comprehensive plans have evolved significantly over the years.

The Northbrook Comprehensive Plan uses a variety of techniques to help make the document relevant not just for the Plan Commission and Board of Trustees, but for all Village Departments, local residents, the business community, and other governmental agencies. It has several key features:

1. It is ***comprehensive***; it addresses the ***critical physical, social and economic components*** of our Village;
2. It is ***general***; it establishes ***guidelines, not specific policy mandates***, for future land development and public infrastructure and service decisions;
3. It is ***long-term***; it normally focuses on long-term land use and infrastructure needs;
4. It is ***dynamic*** and ***must change over time*** to respond to evolving conditions.
5. It is ***coordinated*** and ***internally consistent***; the policies in the plan relate to one another.
6. It includes a series of ***goals and general strategies*** related to each element.
   - **Goals** represent the desired outcome by the community. The goals in this Plan are ***recognized as not necessarily being achievable***. They represent the ideals of the Village and are to be used as guide in decision-making and not a mandate limiting the policy options in the future.
   - **Strategies** represent a ***general approach*** related to achieving an established goal or vision. During the course of implementing the Plan, the strategies will be used as a guide to help formulate specific approaches or tasks to effectively implement or achieve the established goals.
7. It is designed to be part of an ***ongoing planning program*** to allow for the ***regular prioritization of implementation measures*** over time based upon the issues of the day and time and resources available.

The Comprehensive Plan should change over time to remain relevant and effective. Nothing in this document is set in stone. It should be an open-ended document, allowing for different plan components to be amended, added to or removed at any time through the plan amendment procedures.

The procedure to formulate a Comprehensive Plan is a process where public agencies, elected officials, special interest groups, community leaders and citizens come together to lay out a long-term comprehensive vision for the future of the community. This vision in turn lays the foundation for public policies and community development guidelines that serve as an overall policy framework for public and private decision-making.

Since comprehensive planning is an ongoing process, different planning processes may be used at different times. The diagram on the next page depicts the process used for the formulation of the Northbrook Comprehensive Plan. It also depicts the ongoing process of reviewing and monitoring the plan and making necessary amendments in the future. As stated previously, an ongoing re-assessment of plan policies and



INTRODUCTION

What is a Comprehensive Plan?

The Comprehensive Plan is a policy document outlining the community's intentions regarding the physical development of the Village. It is neither a legislative nor a regulatory document. It offers guidelines and concepts to assist the community and elected officials in the process of their day-to-day development decision making. The form and substance of comprehensive plans have evolved significantly over the years.

The Northbrook Comprehensive Plan uses a variety of techniques to help make the document relevant not just for the Plan Commission and Board of Trustees, but for all Village Departments, local residents, the business community, and other governmental agencies. It has several key features:

1. It is ***comprehensive***; it addresses the ***critical physical, social and economic components*** of our Village;
2. It is ***general***; it establishes ***guidelines, not specific policy mandates***, for future land development and public infrastructure and service decisions;
3. It is ***long-term***; it normally focuses on long-term land use and infrastructure needs;
4. It is ***dynamic*** and ***must change over time*** to respond to evolving conditions.
5. It is ***coordinated*** and ***internally consistent***; the policies in the plan relate to one another.
6. It includes a series of ***goals and general strategies*** related to each element.
   - **Goals** represent the desired outcome by the community. The goals in this Plan are ***recognized as not necessarily being achievable***. They represent the ideals of the Village and are to be used as guide in decision-making and not a mandate limiting the policy options in the future.
   - **Strategies** represent a ***general approach*** related to achieving an established goal or vision. During the course of implementing the Plan, the strategies will be used as a guide to help formulate specific approaches or tasks to effectively implement or achieve the established goals.
7. It is designed to be part of an ***ongoing planning program*** to allow for the ***regular prioritization of implementation measures*** over time based upon the issues of the day and time and resources available.

The Comprehensive Plan should change over time to remain relevant and effective. Nothing in this document is set in stone. It should be an open-ended document, allowing for different plan components to be amended, added to or removed at any time through the plan amendment procedures.

The procedure to formulate a Comprehensive Plan is a process where public agencies, elected officials, special interest groups, community leaders and citizens come together to lay out a long-term comprehensive vision for the future of the community. This vision in turn lays the foundation for public policies and community development guidelines that serve as an overall policy framework for public and private decision-making.

NORTHBROOK ZONING CODE
PROPOSED AMENDMENTS - Introduction

The new Comprehensive Plan examines a community that is now nearly "built out", with minimal large vacant tracts of land remaining and limited opportunity for annexation. As the map on the following page illustrates, we expect most new development in the future to be of an "infill" nature. The planning policies of the Village thus need to be modified to reflect ~~this situation~~that Northbrook is now a "mature'" community and the policies of the Village need to reflect the emerging development pattern. Likewise, the "slowing" pattern of community growth can also be seen in the population graph on the following page.

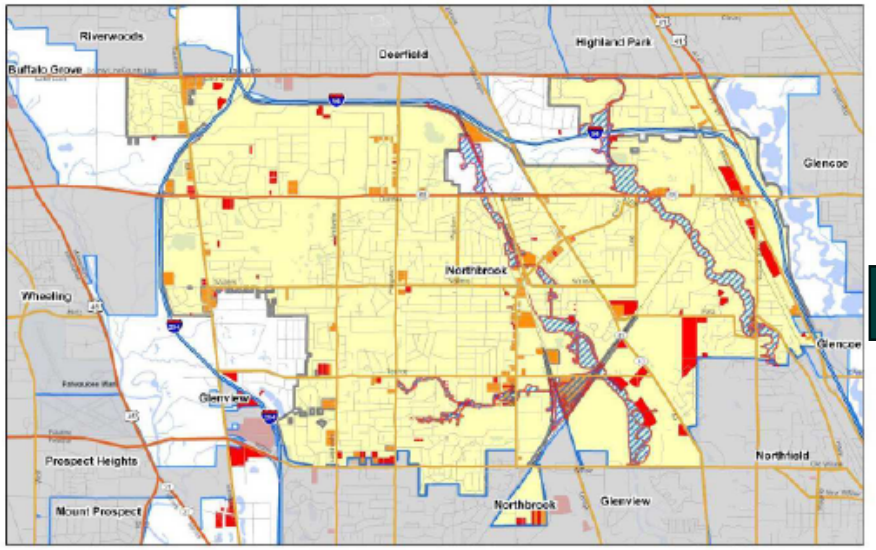

Village of Northbrook
Development & Planning Services

Northbrook Comprehensive Plan:
Vacant or Potential Redevelopment Sites
Northbrook and Immediate Vicinity
(November 1, 2009)

Legend
100-Year Floodplain
Possible Redevelopment Site
Currently Vacant Site
Northbrook Limits

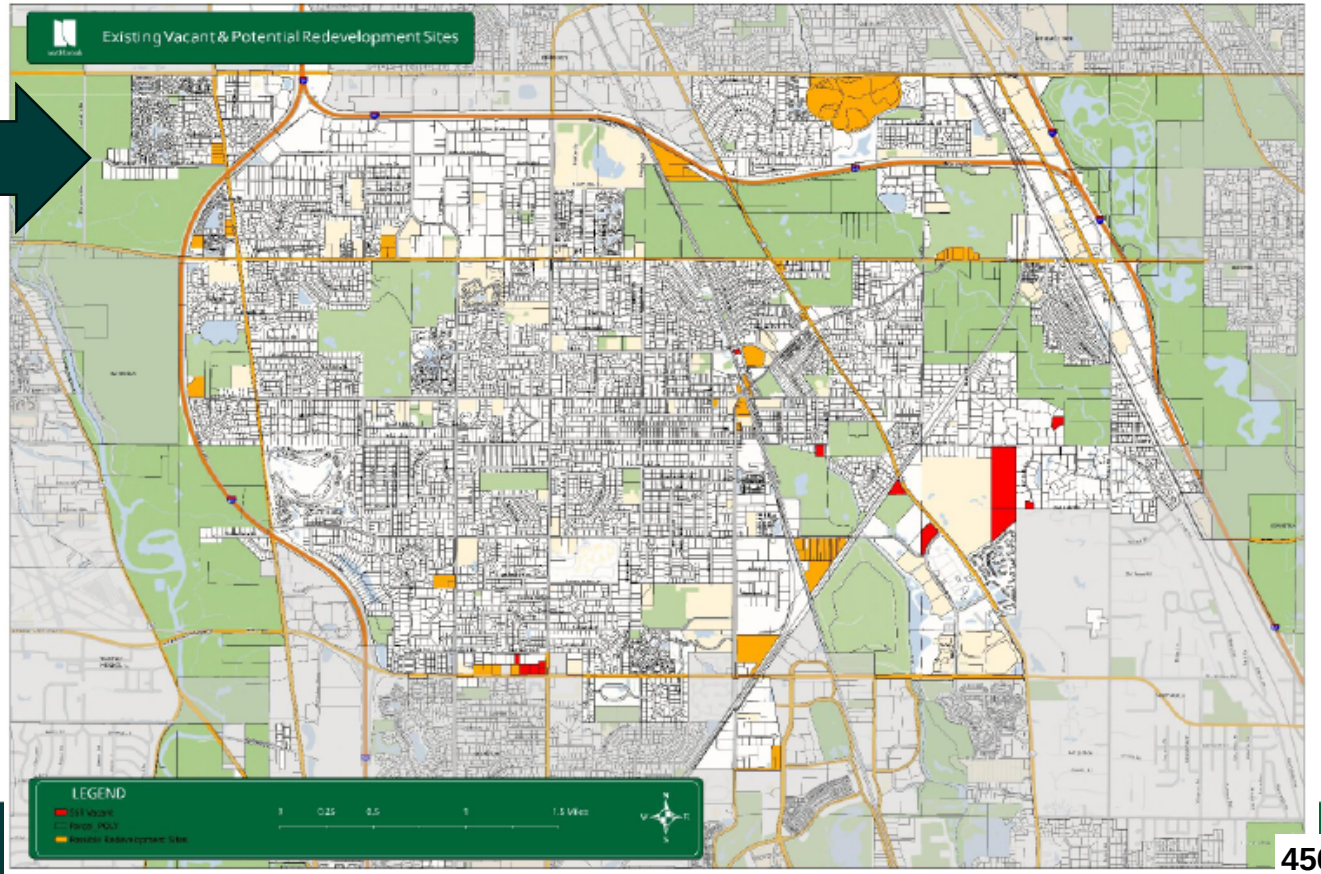

NORTHBROOK ZONING CODE
PROPOSED AMENDMENTS - Introduction

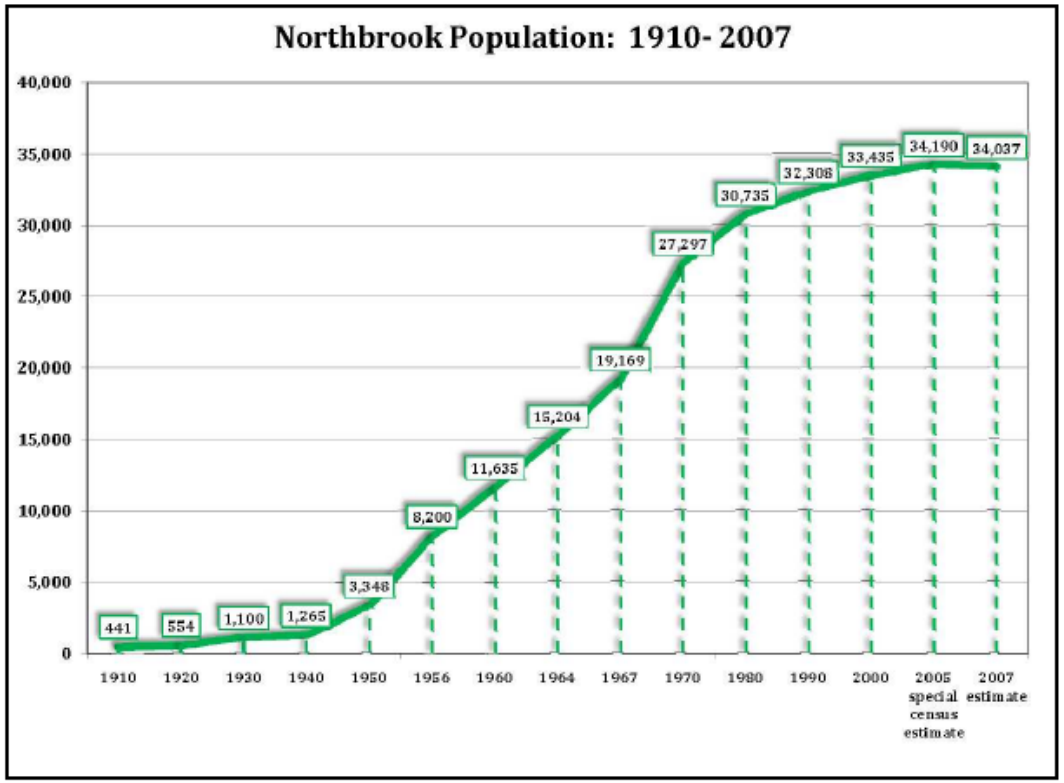

Figure I-A: Northbrook Population Change over Time

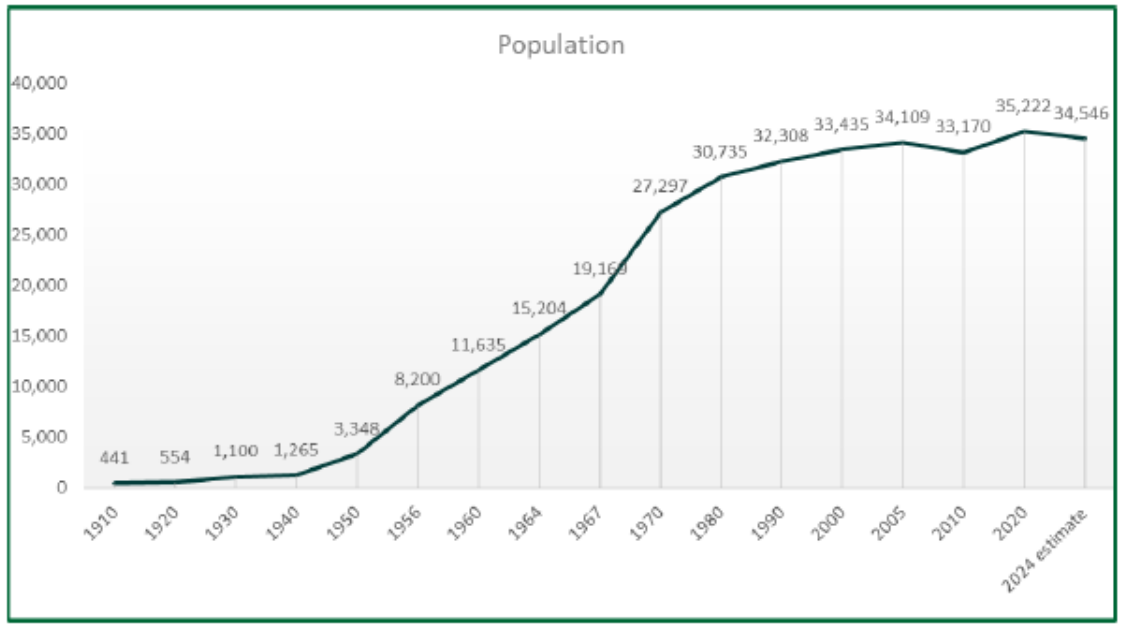

Figure 1: Northbrook Population Over Time

NORTHBROOK ZONING CODE

PROPOSED AMENDMENTS – Element One: Overall Community Goals

ELEMENT ONE:
OVERALL COMMUNITY GOALS

Northbrook's Comprehensive Plan process began with the development of an over arching governing set of goals. These goals are established to guide not only the Comprehensive Plan process, but also the implementation of the Plan over time. The overall goals set the foundation for the entire framework of the Comprehensive Plan.

The goals in this Plan represent the ideals of the Village and are to be used as a guide in local decision-making. They should not be viewed as a mandate that limits the policy options available to the community in the future.

These goals guide the development of the Future Land Use Map, as well as the policies and implementation strategies in every element of the Plan. As the foundation of the Comprehensive Plan, these overall community goals will help direct future policy decisions, land use decisions and planning efforts for many years to come.

A total of twelve overall community goals were developed by the Village's Comprehensive Plan Advisory Committee (CPAC) following a series of orientation sessions on community issues presented by Village staff. The twelve community goals are listed below, in no particular order:

OG 1. Continue Collaborative Decision-Making Practices; A Connected Community. Northbrook will maintain and improve its communication measures and interactions with the residents, businesses and other local taxing bodies (schools, parks and library) to promote a collaborative decision-making process in those matters that have broad policy implications.

OG 2. Continue Efforts to Improve the Downtown. The Village's downtown will evolve into a unique gathering place and transportation hub that is the symbolic center of the community. Enhancing the downtown by means of public-private partnerships will be a high priority of the Village, particularly in the provision of affordable housing opportunities.

OG 3. Promote Sustainable Development. Citizens and decision makers for the Village will recognize their shared responsibility to be conscientious stewards of our natural, manmade and social resources so they will be available for future generations.

OG 4. Maintain the Character of Our Neighborhoods. Northbrook will continue to be a community comprised of attractive, safe and active residential neighborhoods. Recognizing that Northbrook is largely a "built-up" community, the Village will continue to monitor the effectiveness of its zoning, building and property maintenance standards.

OG 5. Celebrate the Community's Diversity. The Village of Northbrook will celebrate its cultural, religious and social diversity, expand its diverse housing stock, and recognize the responsibility we have to improve the community for future generations.

OG 6. Maintain the "Uniqueness" of Northbrook. Northbrook will continue to be a high quality suburban community that continues to have its own unique sense of place and identity as reflected in our architecture, landscape, arts and culture. The Village's uniqueness distinguishes it from surrounding municipalities resulting in a place that residents and businesses alike are proud to call "home".

OG 7. Continue to Invest in Critical Village Infrastructure. The roads, water lines, sanitary sewer lines, storm drainage systems and other public infrastructure will be properly maintained, and a strategic approach to financing will be used in order to minimize the risk of having the investment create an undue financial burden to current or future taxpayers in the community.

OG 8. Deliver Quality Public Services in a Cost-Effective Manner. Northbrook will continue to be known for the outstanding public and private schools, parks, library and other public services that are critical to the quality of life and strong property values of the Village. The Village will strive to maintain high value and cost-effective municipal services.

OG 9. Maintain our Economic Diversity and Vitality. The Village will continue to be a major employment and retail center for the northern suburbs of the Chicago region. We will strive to maintain a strong and diverse tax base by actively working with the business community to retain existing businesses and attract new businesses that are consistent with the character of the community.

OG 10. Encourage Redevelopment of Key Areas in the Village. Northbrook will continue to grow modestly over time with changes occurring in selected redevelopment areas. This redevelopment will be in concert with the overall vision of the Comprehensive Plan, which encourages a compatible, logical and efficient land use pattern that has adequate public facilities to support new growth.

OG 11. Promote Transportation Choices. The Village will work towards establishing and maintaining a multi-modal transportation system that enables residents, employees and regional traffic to move safely and efficiently though and around the Village without undue levels of congestion while still maintaining the character of the community.

OG 12. Formulate Regional Solutions to Regional Issues. Northbrook will continue to be a leader in promoting regional solutions to problems that affect the greater Northbrook area such as air and water pollution, affordable housing, storm drainage and major transportation system components by fostering regional coordination and partnerships.

NORTHBROOK ZONING CODE

PROPOSED AMENDMENTS – Downtown Area Policies

Downtown Area Policies

The Downtown Area of Northbrook consists of an array of uses ranging from single family residential to retail and restaurant to governmental and cultural facilities. The overall goal for this area is to promote a variety of economically viable ~~mixed-use~~ developments containing uses that will strengthen the community center and support one another.

Land Use

a. Promote a mix of land uses that will reinforce the Downtown Area as the Village's governmental and cultural activity center.

b. Enhance and strengthen the Downtown as a community center by promoting a complementary mix of land uses at a moderate density that will support the desired activities, while blending with the surrounding single-family neighborhoods.

c. Place highest intensity land uses at locations well served by the transportation system and not adjacent to single family homes.

d. Promote the introduction of new land uses that attract/generate pedestrian activity, particularly at the ground floor level, such as restaurants galleries and other uses that can be supported by the market.

e. Use zoning incentives to encourage mixed-use development projects.

f. Monitor the effectiveness of zoning controls and amend them as necessary.

~~f.~~g. Support a range of housing types that meet the needs of all residents of the Village, particularly young families and seniors.

DA 1. ***Economic Development***

a. Encourage a balance of retail, restaurant, and office activities that provide necessary services to the residents of the Village; promote residential density levels that support the activities.

b. Review alternatives for public-private partnerships to help finance necessary public improvements to encourage the redevelopment of identified parcels in the Downtown; specifically the use of Tax Increment Financing (TIF) and or the creation of a business district, or special service area.

~~b.~~c. Identify the identity that captures the essence of the Village's future vision for downtown and implement marketing efforts around that vision.

DA 2. ***Transportation***

a. Encourage a pedestrian-friendly "Village" atmosphere throughout the Downtown Area.

b. The Downtown Area should be easily accessible by automobile, foot, bicycle, bus, and train.

c. Continue to monitor the capacity of existing intersections in and around the Downtown to determine if improvements or enhancements are necessary.

d. Consider strategies to maximize the efficiency of on- and off-street parking resources.

~~d.~~e. Promote the use of shared parking for complimentary land uses and destinations.

~~e.~~f. Consider needs of bicyclists in planning future roadway and pedestrian improvements.

~~f.~~g. Recognize the importance of the Downtown commuter station as one of the focal points for downtown activity.

DA 3. ***Community Facilities and Amenities***

a. Improve the coordination of business, civic and cultural activities.

b. Reinforce the Village Green Park as a community focal point and important open space and recreation element.

c. Provide for streetscape improvements as development occurs ~~on Shermer Road north of Church Street and south of Walters Avenue~~in the Village Green Overlay District.

DA 4. ***Infrastructure & Utilities***

a. Continue efforts to enhance the river and mitigate flooding, while establishing a continuous and useable open space system along the river.

b. Place utilities underground whenever practical and possible.

c. Recognize the existence of 100-year floodplain areas and work to remove flood hazards.

DA 5. ***Public Participation***

a. Continue to involve a mix of residents, Downtown property owners, and business representatives and community leaders in the decision-making process for the future of the Downtown.

b. Widely publicize public hearings involving significant regulatory, land use or transportation changes in the Downtown.

~~b.~~c. Coordinate efforts with downtown property owners and business representatives to establish a Downtown Association.

FOR MORE INFORMATION

northbrook.il.us



MEMORANDUM

To: Village Manager, Cara Pavlicek
From: Director of Human Resources, Sarah Bagley
Date: 2026-07-14
Subject: An Ordinance Amending the Board of Fire and Police Commission Rules

Overview
As recommended by the Board of Fire and Police Commissioners, this amendment will expand and improve procedures for the recruitment of entry level Police Officer and Firefighter candidates as well as update administrative language.

Fiscal Impact
N/A.

Recommendation
Approval.

Strategic Priority
Organizational excellence. Foster a high-performing, supportive, and innovative culture where everyone contributes to the delivery of exceptional services for both internal and external customers.

Background
From time to time, the Board of Fire and Police Commissioners (BFPC) will review its Rules and Regulations with the Chiefs of Fire and Police and the Human Resources Director for the purpose of improving procedural matters related to their purview which is primarily focused on recruitment of new firefighters and police officers, as well as the first promotional ranks of Fire Lieutenant and Police Sergeant. The Rules and Regulations do not govern the operations of the Departments. The Commission met on June 18, 2026, to review amendments to the Rules and Regulations dated March 2025 and has recommended approval of the amendments to the Village Board. The attached document identifies proposed changes and a clean copy is attached as well. Labor Counsel has reviewed these rules as well.

Subject to Village Board approval, the amended rules will be posted to the Village website and distributed in accordance with the Rules and Regulations.

An Ordinance Amending the Board of Fire and Police Commission Rules and Regulations
Board of Fire and Police Rules and Regulations 2026 _Final Revisions_Accepted Changes.pdf
Board of Fire and Police Rules and Regulations 2026 _Final Revisions_Tracked Changes.pdf

Ordinance 2026-

BE IT ORDAINED by the President and Board of Trustees of the Village of Northbrook, County of Cook and State of Illinois, THAT:

An Ordinance Amending the Board of Fire and Police Commission Rules and Regulations

shall be, and is hereby, adopted as follows:

Section 1. BACKGROUND.

The Rules and Regulations of the Northbrook Board and Fire Commissioners (BFPC) have been amended from time to time to reflect changing laws and practices. At this time, the BFPC has recommended several changes to the Rules and Regulations to modify the Entry level Police Officer and Firefighter process, Police Officer lateral applicants, adjust the interview process, and various other administrative changes. Upon review of the proposed revisions, the President and Board of Trustees find the revised Rules and Regulation to be acceptable and in the best interest of the Village.

Section 2. AMENDMENTS APPROVED

The revised Rules and Regulations of the Northbrook Board of Fire and Police Commissioners, dated June, 2026, are hereby approved.

Section 3. EFFECTIVE DATE.

This Ordinance shall be in full force and effect upon its passage, approval and publication in the manner provided by law. The Rules shall be in full force and effect ten days after publication of a notice thereof by the Board of Fire and Police Commissioners in accordance with State statute.

Adopted: 07/14/2026

RESULT:
MOVER:
SECONDER:
AYES:
NAYES:
ABSTAIN:
ABSENT:

_____
Village President

ATTEST:

_____
Village Clerk

VILLAGE OF NORTHBROOK
BOARD OF FIRE AND POLICE COMMISSIONERS

RULES AND REGULATIONS

Adopted by the Board of Trustees
of the Village of Northbrook

July2026

TABLE OF CONTENTS

ARTICLE I: ADMINISTRATION

Chapter 1. Authority; Board of Commissioners

Chapter 2. Calls for Examinations

ARTICLE II: POLICE DEPARTMENT HIRING

Chapter 3. Police Department Registers of Eligibles

Chapter 4. Applications for Rank of Police Officer

Chapter 5. Examinations and Appointments for Rank of Police Officer

Chapter 5a Police Officer Lateral Entries

Chapter 6. Applications for Police Department Promotional Positions

Chapter 7. Police Department Promotional Examinations and Appointments

Chapter 8. Police Department Temporary Appointments and Voluntary Demotions

ARTICLE III: FIRE DEPARTMENT HIRING

Chapter 9. Fire Department Registers of Eligibles

Chapter 10. Applications for Position of Firefighter/Paramedic

Chapter 11. Examinations and Appointments for Position of Firefighter/Paramedic

Chapter 12. Applications for Fire Department Promotional Positions

Chapter 13. Fire Department Promotional Examinations and Appointments

Chapter 14. Fire Department Temporary Appointments and Voluntary Demotions

ARTICLE IV: DISCIPLINE

Chapter 15. Suspensions, Removals, Demotions, and Discharges

ARTICLE V: DEFINITIONS; GRAMMAR

Chapter 16. Definitions and Grammar

DRAFT

ARTICLE I: ADMINISTRATION

CHAPTER 1. AUTHORITY; BOARD OF COMMISSIONERS

Section 1.1 Source of Authority.

The Board of Fire and Police Commissioners of the Village of Northbrook (the "*Commission*") derives its power and authority from the Illinois Board of Fire and Police Commissioners Act, 65 ILCS 5/10-2.1-1 *et seq.* and as authorized by the Village's Board of Trustees through an exercise of its home-rule authority.

Section 1.2 Applicability of Rules and Regulations; Definitions.

A. Applicability of Rules and Regulations. These Rules and Regulations apply to the governance, control, and administration of the Commission and to original appointments, promotions, and hearings related to members of the Fire Department and Police Department of the Village of Northbrook.

B. No Applicability to Governance of Departments. These Rules and Regulations do not govern the operations of the Fire Department or the Police Department.

C. Definitions and Grammar Rules. The definitions and grammar rules applicable to these Rules and Regulations are included in Chapter 10.

Section 1.3 The Commission.

A. Composition; Appointments; Commissioners. The Commission shall consist of three Commissioners. The Chairperson of the Commission shall be a Commissioner and shall be appointed by the Village President with confirmation by a majority of the Board of Trustees. The Chairperson shall be the presiding Commissioner at all meetings of the Commission except that, in his or her absence, a temporary presiding Commissioner shall be elected by the remaining two Commissioners. The Village Human Resources Director shall be the Secretary of the Commission unless another Village staff member is designated in the Director's absence by the Village Manager. Responsibilities of the Secretary shall be to keep the minutes of all Commission meetings in a permanent record book; to be the custodian of all the forms, papers, books, records, and completed examinations of the Commission; to keep a record of all examinations conducted by the Commission; and to perform all other duties prescribed by the Commission.

B. Duties. The Commission shall appoint all members of the Departments in accordance with, and to the extent provided in, these Rules and Regulations. The Commission also shall promote and discipline all members of the Departments, as provided by the Act. The Fire Chief and Police Chief shall be appointed by the Village Manager. The Managerial Positions shall be appointed by the Fire Chief or Police Chief subject to the prior advice and consent of the Village Manager.

Section 1.4 Commission Meetings.

A. Regular, Special, and Emergency Meetings. The regular annual meeting of the Commission shall be held on the first Thursday in May of each year. The office of the Commission is designated as 1225 Cedar Lane, Northbrook, Illinois 60062-5199, and the annual meeting shall be held at that office unless otherwise provided. The Chairperson or any two Commissioners may call a special meeting or an emergency meeting of the Commission. All meetings of the Commission, including a special meeting, shall be posted on the Village website and noticed at least 48 hours in advance or as otherwise provided by the Illinois Open Meetings Act.

B. Closed Sessions. During any regular or special meeting, a closed session may be held upon a proper motion made by any Commissioner and passed by a roll call vote for the purpose of discussing matters related to appointment, employment, discipline, performance, or dismissal of specific personnel pursuant to 5 ILCS 120/2 (c) (1) of the Open Meetings Act. Closed sessions will be limited to the Commissioners, Secretary, Village Attorney, and other persons deemed necessary by the Commission, if any. The Secretary will record the motion to close the meeting, record the vote of the Commissioners on that motion and keep minutes of the closed session. An audio or video record of each closed session will be maintained by the Secretary and disposed of in accordance with the provisions of the Open Meetings Act.

C. Public Notice of Meetings. Public notice of any regularly scheduled or special meeting shall be posted on the Village website and held in accordance with the Open Meetings Act.

D. Attendance by Electronic Means. If a member is unable to be present physically at a meeting of the Commission for health related reasons, or the need to conduct personal business or the business of the Commission, or due to a personal or family emergency, then that Commissioner may attend and participate at the meeting by telephone or other electronic means, subject to the following conditions: (1) that Commissioner must give notice of his or her intent to attend and participate at the Commission meeting by electronic means to the Commission's recording secretary or the Village Clerk at least four hours prior to the scheduled meeting, which notice must state the reason why that Commissioner is attending by electronic means and (2) the other two Commissioners must be physically present at the meeting and must vote to approve the attendance of the third Commissioner by electronic means. The minutes of the meeting must state which Commissioner attended by electronic means and the reason for attendance in that manner.

E. Quorum. Two Commissioners, being a majority of the Commissioners, shall constitute a quorum of the Commission for the conduct of all Commission business.

F. Agenda. The agenda for each meeting shall include the following elements: Call to Order and Roll Call, Approval of Minutes, Public Comment, Communications, Discussion Topics, and, if necessary, Closed Session.

G. Procedures. When these Rules and Regulations do not establish a specific procedure for conducting the business of the Commission, then parliamentary procedures prescribed in Roberts Rules of Order shall be followed, as far as applicable and practical. Motions may be made and seconded orally by any member of the Commission and shall be recorded in the minutes together with the action taken thereon.

Section 1.5 Annual Report and Budget.

If requested by the Village Manager, the Commission shall submit, before the last day of April in each year, an annual report of its activities and of the rules in effect and the practical effect thereof to the Village Manager for transmission to the Village President and Village Board. Also if requested by the Village Manager, the Commission shall submit to the Village Manager for transmission to the Village President and Village Board a budget request for the following Village fiscal year. The budget request shall be limited to those amounts necessary for the conduct of the Commission's operations.

Section 1.6 Amendments of Rules and Regulations.

The Commission, with the approval of the Village Board, may amend these Rules and Regulations from time to time. The Commission shall submit each proposed amendment to the Village Board for its approval prior to the amendment being printed for distribution. After Board approval, each amendment will be posted on the Village website and the Secretary shall give notice of (a) the place where the Rules and Regulations, as amended, may be obtained and (b) the date, not less than 10 days subsequent to the time of publication, when the Rules and Regulations as amended shall take effect. Such notice shall be published in a newspaper published in the Village or, if no newspaper is published in the Village, then in a newspaper with a general circulation within the Village.

Section 1.7 Governing Law; Conflicts; Severability.

A. These Rules and Regulations Apply. In the case of any conflict between any provision of these Rules and Regulations and any provision of any federal, State of Illinois, or Village constitution, statute, ordinance, or regulation (the "*Other Law*"), the provision of these Rules and Regulations shall apply and govern unless such provision is legally preempted by the Other Law.

B. No Applicability to Managerial Positions. These Rules and Regulations do not apply to positions above the Sergeants and Captains.

C. Conflict Limited. If any provision of these Rules and Regulations is rendered invalid pursuant to Subsection A of this Section, then that fact shall not affect any other provision of these Rules and Regulations.

D. Severability. If any provision of these Rules and Regulations, or the application of any provision to any person, case, or circumstance, is held invalid by a court of

competent jurisdiction, that invalidity shall not affect any other provision of these Rules and Regulations or the application of that provision to other persons, cases, or circumstances that can be given effect without the invalid provision or application, and to this end the provisions of these Rules and Regulations are severable.

CHAPTER 2. CALLS FOR EXAMINATIONS

Section 2.1 Examination Calls.

The Secretary, upon advice of the Department(s), shall advise the Commission Chair that a Call for Examination is required along with a status of existing Registers of Eligibles, as applicable, demonstrating the need for an examination and the following information: the time and place where the examination will be held; the location where applications may be obtained and the date by which applications must be returned to the Commission; the rank to be filled from the resulting Register of Eligibles; any special eligibility standards established pursuant to Subsections 4.1E and 10.1E of these Rules and Regulations; and notice that applications for that examination will be received for a period of time established by the Secretary but not less than two weeks.

The Commission Chair shall within five business days advise the Secretary to call a meeting of the Commission to review, discuss and/or amend the Call for Examination if such a meeting of the Commission is deemed necessary by the Chair. If the Commission Chair does not call for a meeting of the Commission, the Secretary will proceed with notice to the full Commission and Department(s) of the Call for Examination and related information and proceed in accordance with the details provided to the Chair.

The Village will accept applications for entry level and lateral police officer appointment as well as firefighter paramedic appointment and conduct testing throughout the year to establish one register of eligibles per position that does not expire. The Commission may also utilize a testing vendor for purposes of selecting candidates for further application and review. This may be reviewed on an annual basis and individuals may be removed if they have been on the Register of Eligibles for over one year.

Section 2.2 Notice of Examination.

An examination will be held at a time and place fixed by the Secretary with consent of the Chair or by the testing vendor selected by the Secretary. Notice of the examination must be given by publication at least two weeks preceding the examination either on the Village's Internet website or in one or more newspapers published in the Village in accordance with the statutes of the State of Illinois, or both, except that notice of an examination for a promotional rank may be waived in writing by all members of the Department eligible for that examination. The notice of examination must state the period during which applications for that examination will be accepted. The examination may be postponed by order of the Commission, which order shall state the reason for the postponement and shall designate a new date for the examination. Applicants will be

notified of the postponement of the examination and of the new date fixed for said examination.

If the Commission participates in a Continuous Examination Process, notice of the Village's participation in that process shall be posted on the Village's website which identifies the testing vendor and information necessary for the applicant to contact the vendor and participate in the testing process, e.g. telephone number, email and/or website.

Section 2.3 Type of Examinations.

The elements of an examination must be practical in character and fairly test the capacity of applicants to discharge the duties of the position to which the applicants seek appointment. No examination may contain questions regarding political or religious opinions or affiliations, and no consideration may be given to such matters under any circumstances.

ARTICLE II: POLICE DEPARTMENT HIRING

CHAPTER 3. POLICE DEPARTMENT REGISTERS OF ELIGIBLES

Section 3.1 Establishment of Police Department Registers of Eligibles; Tied Scores.

The Commission shall utilize a Register of Eligibles for entry-level appointment within the Police Department as a patrol officer. A Register of Eligibles shall rank all applicants who have passed all elements of a written examination in order of their relative excellence as determined by the examination and preferences, but without reference to priority of time of examination and preliminary background investigation. In the event of tied scores, the month of the applicant's date of birth will determine priority on the list. The Commission may establish a continuous application process or a one time testing and eligibility list at its discretion.

Section 3.2 Initial Police Department Eligibility Lists.

A. Police Officer Rank.

2. The Secretary of the Commission or their designee at the recommendation of the Chief, at their discretion, may authorize appointments from the Initial Eligibility List. Calls for Police Officer Lateral Entry applications will be requested by the Secretary of the Commission and/or the Police Chief, or his/her designee and the Supervisory Positions in accordance with these Rules, including without limitation Chapter 5a of these Rules.

3. The Chief of Police and the Secretary of the Commission, at their discretion, may fill a vacancy in the rank of Police Officer by appointing an applicant from the Register of Eligibles who has been awarded a certificate attesting to the applicant's successful completion of the Illinois Law Enforcement Training and Standards Board basic Full-time Police officer training program (or out of state equivalent) and employees who serve as a CSO for the Village, ahead of applicants who have not achieved that certification and license. Those selected with a valid full-time certification will be considered as "lateral" candidates.

B. Promotional Positions. Within 60 days after all applicants for a promotional rank have completed all applicable elements of an examination (*see* Section 7.1), the Secretary shall prepare and post an Initial Eligibility List of the applicants who passed all of those elements, ranking those applicants in order of their relative excellence.

Section 3.3 Police Department Preference Points.

A. Entry-Level Preference Points.

1. Maximum Possible Police Department Entry-Level Points. An applicant for the rank of police officer may receive a maximum of 5 preference points . Points may be given only if a proper and valid claim for a preference has been made and only if the standards of the Act and these Rules and Regulations have been met.

2. Available Police Department Entry-Level Points. Preference points for the rank of police officer may be awarded as follows:

- Education Points. The applicant may be awarded educational preference points as outlined below for the highest level of education achieved.
- For total course credit hours of 60 to 89 credit hours: 2.1 points.
- For total course credit hours of 90 or more: 2.8 points.
- For a bachelor's degree: 3.5 points
- For a Master's degree: 5points

i.

ii. Law Enforcement Training and Employment Points. The applicant may be awarded 5 points if the applicant has been awarded a certificate attesting to the successful completion of the Minimum Standards Basic Law Enforcement Training Course as provided in the Illinois Police Training Act and is currently serving as a law enforcement officer on a part-time or full-time basis within the State of Illinois.

iii. Military Service Points. An applicant may be awarded 5 points if (a) the applicant was engaged in the active military or naval service of the United States for a total cumulative period of at least one year and was honorably discharged or (b) the applicant is currently or has been on inactive or reserve duty in such military or naval service for a total cumulative period of at least one year, except as provided in 65 ILCS 5/10-2.1-8 of the Act.

iv. Qualified Position Service Points. An applicant may be awarded points for civilian service as an active Village employee in the capacity as Community Service Officer, dispatcher, records clerk, or similar position related to the Police Department operations or the work performed by a police officer.. A maximum of 5 points may be awarded as follows: 1/4 of a point at the date of hiring plus 1/4 of a point for each month of continuous employment in a qualified position.

3. Time and Method of Claiming Police Department Entry-Level Preference Points. .

Upon application for the written exam, each applicant on that list who may claim preference points for educational status or military service shall submit his or her claim for that preference in writing with support with the application or an agency or consultant designated by the Secretary of the Commission.

B. Police Department Promotional Preference Points.

1. Maximum Possible Police Department Promotional Points. An applicant for a promotional rank within the Police Department may receive preference points if that applicant qualifies for those points under this Subsection 3.3.B. Not more than a total of 3.5 preference points may be awarded to any applicant.

2. Military Service Points. Upon receipt of a valid claim for a military service preference from an applicant for a promotional position in the Police Department, the Secretary shall add $^{7}/_{10}$ of one point to the applicant's total examination score for each six months or fraction thereof of active military service, not exceeding 30 months.

3. Advanced Education Points. Upon receipt of a valid claim for an advanced education preference from an applicant for a promotional position in the Police Department, the Secretary shall add points to the applicant's total examination score as follows:

- For total course credit hours of 60 to 89 credit hours: 2.1 points.
- For total course credit hours of 90 or more: 2.8 points.
- For a bachelor's degree: 3.5 points

All course credit hours must have been earned from a nationally accredited college or university and must be supported by official transcripts

5. Time and One Time Only Preference Points. A preference for a promotional appointment may be made only if the applicant has not previously been promoted in the Police Department.

Section 3.4 Final Police Department Register of Eligibles.

After the process of adding preference points has been completed, the Secretary shall re-rank the applicants on the Initial Eligibility List according to their scores including preference points. Each applicant's order of eligibility as thereupon determined will be the basis for placement of the applicants on the Register of Eligibles.

Section 3.5 Additions to Police Department Registers of Eligibles.

After determining the final order of eligibility for an Eligibility List, the Secretary shall immediately integrate that Eligibility List into the existing Register of Eligibles, if one exists. After the transfer of the names of all applicants on an Initial Eligibility List to the Register of Eligibles, the Initial Eligibility List must be abolished and will be of no further force or effect.

Section 3.6 Removal of Names from Police Department Registers of Eligibles.

A. Entry-Level Registers. The Secretary shall strike from the Register of Eligibles for the rank of police officer the name of:

1. any applicant who may be disqualified pursuant to any provision of these Rules and Regulations; and

2. any applicant who did not pass the Preliminary Character and Background Check;

3. any applicant who ceases to meet the qualifications for the rank of police officer;

4. any applicant who does not meet the qualifications for an officer under the Illinois Law Enforcement Officer's Training and Standards Board requirements; and

5. any applicant who does not, or cannot, accept the position within three business days after receiving notice of his or her appointment, except as otherwise provided in Subsection 5.3.B of these Rules and Regulations.

B. Promotional Registers. The Secretary shall strike from the Register of Eligibles for a promotional rank the name of:

1. any applicant who may be disqualified pursuant to any provision of these Rules and Regulations; and

2. any applicant who has been on that Register of Eligibles for more than three years; and

3. any applicant who ceases to meet the qualifications for the rank to be filled from that Register of Eligibles; and

4. any applicant who does not, or cannot, accept the position within seven days after receiving notice of his or her appointment, except as otherwise provided in Subsection 7.3.B of these Rules and Regulations.

CHAPTER 4. APPLICATIONS FOR RANK OF POLICE OFFICER

Section 4.1 Minimum Requirements and Standards for Entry-Level and Lateral Police Officer Applicants.

A. Citizenship. At the time of filing an application, an applicant for a position in the Police Department must be a citizen of the United States.

B. Age. Each applicant must provide proof of his or her birth date at time of filing an application.

1. Minimum Age for All Police Department Positions. At the time of filing an application for any position in the Police Department, an individual must have passed his or her 21st birthday.

2. Maximum Age for Entry-Level Police Officer Position. At the time of filing an application for the rank of police officer, the applicant must be less than 35 years of age, unless the applicant is exempt from that age limitation under 65 ILCS 5/10-2.1-6 of the Act. A veteran shall be allowed to exceed the maximum age provision of this Section by the number of years served on active military duty, but by no more than 10 years of active military duty. The maximum age for a lateral candidate will be 49.

C. Fingerprinting. Each applicant must be fingerprinted after successfully completing the written and physical ability elements of the entry-level examination as part of the Preliminary Character and Background Check

D. Police Department Minimum Education Standards. No person shall be eligible to apply for the rank of police officer unless that person has successfully completed two years of studies—equaling an associate's degree, or 60 hours of course work, or equivalent credits—at a junior college, college, or university accredited by a nationally recognized accreditation agency. The Commission may waive this requirement if (1) the applicant has served 24 months of honorable active duty in the United States Armed Forces and has not been discharged dishonorably or under circumstances other than honorable or (2) the applicant has served 180 days of active duty in the United States Armed Forces in combat duty recognized by the Department of Defense and has not been discharged dishonorably or under circumstances other than honorable.

E. Police Department Special Standards. The Commission may set, at the time that it calls an examination, particular standards for eligibility for the rank of police officer if the Commission determines that the position requires special qualifications. The Commission also may require evidence from each applicant establishing that the applicant meets those particular standards.

Section 4.2 Police Department Application Form, Basic Standards.

A. Application Form; Completion. The Commission, its designated representative, or vendor shall furnish the application form, which form must be completed in its entirety by any applicant, including all supplementary information and documentation.

B. Supplementary Information. At the time of filing an application, the applicant must furnish the following:

1. a certified copy of his or her birth certificate;

2. a copy of his or her high school diploma or its equivalent;

3. a copy of his or her military service record, discharge papers, and U.S. Government Form DD214, if applicable;

4. a copy of his or her Social Security Card and/or proof of work authorization;

5. a copy of each other certificate or license required by these Rules and Regulations; and

6. a copy of his or her college or university degree and, if requested, a copy of a certified transcript of his or her course work from an accredited college university or post-high school studies.

C. General Character, Health. An applicant must be of good moral character, of temperate habits, and must be physically able and in a sufficient state of health to perform the essential functions and/or duties of the position for which he or she is applying. The burden of establishing compliance with these standards rests on the applicant.

D. Exclusion for False Statements. A false statement knowingly made by a person in an application, or connivance in any false statement made in any supplementary information that may accompany the application, or complicity in any false statement or fraud related to an application or supplementary information shall be good cause for exclusion from the examination.

Section 4.3 Filing of Police Department Application.

The application for the position of police officer must be filed with the Secretary of the Commission or with an agency or representative designated by the Commission. No position will be filled unless the Village publishes notice of vacancies and acceptance of applications Each applicant shall be responsible for advising the Commission of any changes in his or her physical address, email address or telephone number.

Section 4.4 Disqualification.

A. Grounds. The Commission may refuse to examine, or after examination refuse to certify as eligible, or after certification as eligible refuse to retain on the Register of Eligibles, any applicant:

1. who is found lacking in any of the established general requirements, or in any special standards established pursuant to Subsection 4.1.E of these Rules and Regulations, for an entry-level position stated in these Rules and Regulations or in the Act; or

2. who is a user of narcotics or other non-prescription drugs, or a habitual user of intoxicating beverages; is a gambler; or is not a person of good character; or

3. who has been convicted of a felony, a crime of moral turpitude, or a misdemeanor specifically listed in 65 ILCS 5/10-2.1-6 as amended from time to time 50 ILCS 705/1 et seq., or as required by law; or

4. who, in the judgment of the Commission, has practiced or attempted to practice any dishonesty, deception, or fraud in his or her application, examination, or other submissions to or dealings with the Commission, the Police Department, or the Village; or

5. who has failed to abide by the rules and procedures governing any aspect of the application process; or

6. who is physically or mentally unable to perform the essential functions/duties of the position to which he or she seeks appointment; or

7. who has been dismissed from any public service for good cause; or

8. whose character or employment references are unsatisfactory; or

9. who has applied for a position in the Police Department and is, or has been, classified as a conscientious objector; or

10. who has failed to appear for, or failed, any element of the examination or otherwise has not successfully completed any portion of the hiring process; or

11. who does not have a valid automobile driver's license; or

12. who knowingly divulges or receives test questions or answers before a written examination; or

13. who has previously tested with the Village for a position in the Fire Department or Police Department and failed the polygraph, psychological or background check; or

14. who does not respond to communication from the Village or Commission for a period of time exceeding three (3) business days, or

15. who is unable to work a rotating shift

B. Notification. Any applicant who has been disqualified will receive notice from the Secretary of the Commission of the disqualification.

Section 4.5 Release of Liability.

In consideration of being admitted to the examination process, all applicants must execute and deliver to the Village or its designated representative a release of all liability as a result of participating in the examinations, and all waivers and releases of information necessary to allow the Village or its designated representative to complete all elements of the examination, on forms approved by the Village, or its designee..

Section 4.6 Admission to Examination.

No person shall knowingly be admitted to any element of any examination who does not meet the minimum qualifications established for the rank of police officer. The fact that a person is admitted to an element of an examination will not be considered as evidence that he or she is qualified or eligible for the position.

Section 4.7 No Creation of Applicant Right or Interest.

Neither the filing of an application, nor the acceptance of an application, nor an applicant's satisfaction of the general or special qualifications for filing an application or being admitted to an examination, nor any provision of these Rules and Regulations may be construed or applied as creating any vested, property, or other right or interest in any person to apply for, be examined for, or be appointed to any position in the Departments.

Section 4.8 Correction of Application.

An incomplete or defective application will be returned to the applicant for correction, if the applicant otherwise is qualified for the position he or she seeks. A returned application must be resubmitted within the time period established by the Commission or its designated representative.

CHAPTER 5. EXAMINATIONS AND APPOINTMENTS FOR RANK OF POLICE OFFICER

Section 5.1 Police Officer Examination Elements; Grading.

A. Examination Elements. All applicants must submit themselves for each element of an examination for the rank of police officer at the times and places established by the Commission. An examination will consist of the following elements and will require the indicated minimum passing grade:

Examination Element		Minimum Passing Grade	% of Total Grade
Element 1.	Completion of POWER Test within 6 months of application :	Pass	
Element 2.	Written Test:	70 percent	50%
Element 3.	Preliminary Character & Background Check:	Pass	
Element 4.	Oral Interview:	70 percent	50%
Element 5.	Polygraph Test & Background Check:	Pass	
Element 6.	Psychological & Medical Tests:	Pass	

The Commission may rearrange the order for administering Examination Elements 1, 2, and 3. The failure to achieve the minimum passing grade in any examination element disqualifies the applicant from any further participation.

B. Grading Generally. Each applicant's score will be the average of his or her scores on the written test and the oral examination. No information concerning grades and no test scores will be disclosed or provided to any applicant until after the posting of an Initial Eligibility List or at another time designated specifically by the Commission. The names of persons failing the examination need not be posted, published, or disclosed by the Commission except to that person. Each applicant will be notified within a reasonable time of the result of his or her examination. All examination files and materials, if they are retained, will be maintained as files of the Commission and not of the Police Department but will be subject to disclosure as required by law. Those files will be physically maintained in the location designated by the Village Manager.

Section 5.2 Police Officer Examination Descriptions and Procedures; Deferral.

A. Element One—Physical Ability Test. All applicants may be required to take a physical ability test to be conducted and graded by persons determined by the Commission. If a physical ability test is given, then only applicants who have participated and passed that test will be allowed to continue in the examination process. Applicants who fail to achieve a passing grade on the physical ability test will be notified. The Commission will also accept proof of passing the POWER test within 6 months to satisfy Element One.

C. Element Two—Written Test. All applicants who have successfully passed all prior elements of the examination must submit themselves for a written test.

1. Procedure. The written test will be conducted and graded by two or more Commissioners or by a testing agency or service designated by the Commission.

2. Finality. All test papers are the property of the Commission and any entity assisting the Commission with the test, and the grading thereof by the Commission will be final and conclusive and not subject to review by any other board or tribunal of any kind or description.

D. Element Three—Preliminary Character and Background Check. At the request of the Secretary of the Commission or their designee, the Police Department shall conduct a preliminary character and background investigation of each applicant who has successfully passed all prior elements of the examination. The investigation must review available data and information related to the applicant's compliance with the general qualifications and criteria for the rank of police officer set out in these Rules and Regulations and such other data and information as are pertinent to a proper review and analyses of the applicant.

E. Element Four —Oral Interview. At the request of the Secretary of the Commission or their designee, selected applicants shall submit themselves for an oral interview.

1. Procedure. The oral interview of each applicant will be conducted by individuals from the Human Resources Division of the Village Manager's Office, Police Department (as assigned by the Chief) and at least one Commissioner.. The interview will be administered to those applicants identified by the Secretary or their designee in the order of their standing after the written test. At the end of the interview of each applicant, the interviewers may discuss the merits of that applicant. Each examiner must individually evaluate the applicant. The applicant's evaluation will be the average of all of the interviewers' evaluations.

2. Subjects of Oral Interview. Applicants will be asked questions that will enable the examiners to properly evaluate and grade them on maturity,

communication skills, judgment, leadership ability, managerial ability, appearance, demeanor, resiliency, emotional stability, self-confidence, friendliness, interest in the position, personal fitness for the position, and such other matters as are pertinent to the proper review and analysis of an applicant. Each applicant will be asked questions in the same areas of inquiry so that the examiners can satisfactorily compare the merits of the applicants.

F. Element Five —Detailed Character and Background Check and Polygraph. A detailed character and background check will be conducted of an Applicant who has successfully passed all prior elements of the examination. The investigation must review the applicant's employment history, references, educational background, credit history, litigation history, military record, driving record, neighborhood and community standing and service, and such other data and information pertinent to a proper review and analyses of the applicants. The background investigation must fulfill the requirements of the Illinois Law Enforcement Training Act, 50 ILCS 705/6.5. As a part of the detailed background check, applicants must submit to a polygraph device deceptive test, commonly known as a lie detector test, at a time and place designated by the Secretary of the Commission. Results of the polygraph test must be submitted to the Commission and HR Division of Village Manager's Office for its evaluation. An unsatisfactory result on the polygraph test may subject the applicant to disqualification or to additional testing, at the discretion of the Secretary of the Commission, including but not limited to an additional background and character check, an additional oral test, an additional polygraph test, or any combination of these tests.

G. Element Six —Psychological Test and Medical Test. When directed by the Secretary of the Commission and after a conditional offer of employment has been made by the Village, selected applicant to whom the conditional offer has been made must submit to a psychological test to be given by a qualified examiner selected by the Human Resources Division of Village Manager's Office . The test must be designed and administered solely to determine an applicant's suitability and fitness for the rank of police officer. The examiner shall prepare and submit a report of the examination and a recommendation as to the suitability of the Applicant to the rank of patrol officer to the Human Resources Division of Village Manager's Office

The applicant to whom the conditional offer has been made must submit to a medical test, including without limitation a vision test and drug screening, by a licensed physician designated by the Human Resources Division of Village Manager's Office. The test must be designed and administered for the purpose of determining fitness for, and physical ability to perform, all of the duties of the position sought. A medical test must be completed not earlier than 90 days prior to the date of appointment. A positive result on a confirmatory drug screening test will be a sufficient basis for a determination by the Commission that an applicant has failed the medical test. At any point in the examination process, an applicant may be requested to submit evidence of vision sufficient to meet the

standards of the Department to which he or she is applying or to submit to a vision examination to determine if his or her vision meets such standards. Each applicant shall be responsible for advising the Commission of any changes in his or her physical condition subsequent to the medical test. An applicant may be required to submit to a follow-up medical test prior to appointment to a position.

H. Deferral of Various Examination Elements.

1. Deferral Based on List Placement. The Secretary of the Commission or their designee will select the applicants who will participate in subsequent elements of an examination.

2. Deferral Based on Existence of Vacancies. All examination elements after administration of the oral interview , including the detailed character and background check, the psychological test, the polygraph test, and the medical test, may be deferred by the Secretary of the Commission or their designee for all applicants until the Secretary of the Commission or their designee receives notice from the Police Chief that a vacancy exists in the rank of police officer. When the Secretary of the Commission or their designee receives notice of a vacancy from the Police Chief, the Secretary of the Commission or their designee shall administer the deferred examination elements to the same number of the highest ranking applicants and who have not been so previously examined as there are vacancies to be filled and such additional number of the next highest ranking applicants as the Commission thereafter shall determine, either before or after receiving the results of the examination of the highest ranking applicants.

Section 5.3 Appointments of Police Officers.

A. Basis of Appointment; Notice. Appointments to the rank of police officer will be made in accordance with the Act. Promptly after a vacancy exists in the rank of police officer, the Chief shall appoint to fill the vacancy the highest ranking applicant on the Register of Eligibles for that position. For each appointment, the vacancy will be filled with the then-highest ranking applicant on the Register of Eligibles, except that the Chief, at his or her discretion, may fill a vacancy in the rank of police officer by appointing an applicant from the applicable Register of Eligibles who has been awarded a certificate attesting to his or her successful completion of the Minimum Standards Basic Law Enforcement Training Course, as provided in the Illinois Police Training Act, ahead of applicants who have not achieved that certification. Individuals that are serving in the capacity of CSO for the Village for Northbrook shall also be given deference over applicants that do not have such experience.

The Secretary of the commission will contact the chosen applicant to be notified twice by telephone or e-mail over a three-work-day period. If the applicant does

not respond within 24 hours after the second notice, then the applicant will be deemed to have waived his or her right to the appointment.

B. Waiver of Appointment; Notice. An applicant, within three days after the date of notice from the Secretary of the Commission of a conditional offer of appointment or an appointment, may waive the right to that appointment. That request must be made in writing to the Secretary of the Commission, signed by the applicant. If the Commission receives a proper notice of waiver, then the Commission shall retain the name of the applicant on the Register of Eligibles until the next opportunity for an appointment and shall fill the current vacancy (or vacancies, if more than one appointment is being made at that time) pursuant to the procedures of Subsection A of this Section. If no notice of waiver or response to the notice of appointment is received within the prescribed time, then the Commission shall strike the applicant's name from the Register of Eligibles pursuant to Section 3.6 of these Rules and Regulations and shall fill the vacancy pursuant to Subsection A of this Section. No applicant may be allowed more than one waiver.

In the event of a subsequent vacancy to be filled from the Register of Eligibles, and the applicant qualifies for the appointment, the Commission will cause the applicant to be notified twice by telephone or e-mail over a three-work-day period. If the applicant does not respond within 24 hours after the second notice, then the applicant will be removed from the Register of Eligibles.

C. Certificate of Appointment. After appointment to the rank of police officer, the new police officer will receive a Certificate of Appointment signed by the Chief of Police and Secretary of the Commission.

D. Oath of Office and Bond. Before entering into duty, a new police officer must take an oath and enter into a bond as provided by the Illinois law and Village ordinances.

Section 5.4 Police Department Probation.

A. Probation Generally. A newly appointed police officer will be on probation for a period of 18 months plus an additional six months if determined by the Police Chief to be appropriate based on job performance and approved by the Human Resources Division within the Village Manager's Office.

B. Training During Probation. A newly appointed police officer, within six months after the date of his or her initial appointment, either (1) shall take and complete a training course approved by the Police Chief at an academy approved by the Police Chief on such dates as are designated by the Police Chief and be certified by the Illinois Law Enforcement Training and Standards Board that he or she has successfully completed said course or (2) if previously certified by the Illinois Law Enforcement Training and Standards Board as successfully completing an approved course, shall make a written request for and receive a waiver of additional training from the Illinois Law Enforcement Training and Standards Board.

C. No Rights. During his or her probationary period, the police officer will be deemed not to have any vested, property, or other right or interest in his or her employment with the Village, and nothing in this Section or in any other provision of these Rules and Regulations may be construed or applied to create any such right or interest.

D. Dismissal. During his or her probationary period, the police officer may be dismissed by the Chief with the approval of the Village Manager's Office, if, in the Chief's opinion, it is not in the best interest of the Police Department to continue the employment of that police officer and consistent with the terms of any applicable collective bargaining agreement. The process for termination of a lateral probationary officer is the same as the process for an officer who is an original appointment

E. Suspension. During a probationary period, the Police Chief, with the approval of the Human Resources Director may suspend the probationary police officer without pay, except that no suspension may be imposed without first giving the officer written notice thereof setting forth the basis for the suspension and advising the officer of his or her opportunity to be heard by the Chief or his or her designee concerning the relevant facts and circumstances. The process for suspension of a lateral probationary officer is the same as the process for an officer who is an original appointment

F. Disciplinary Provisions Not Applicable. The provisions of Chapter 15 of these Rules and Regulations do not apply to the dismissal or suspension of a probationary police officer. Nothing in this Section 5.4 may be construed to alter the application of, or to limit the effect of, the provisions of the Uniform Peace Officers' Disciplinary Act, 50 ILCS 725/1 *et seq*., when applicable to the investigation of misconduct of any peace officer.

CHAPTER 5a. POLICE OFFICER LATERAL ENTRY

Section 5a.1 Authority for Police Officer Lateral Entry

A. Lateral Entry. The Commission may determine to create and maintain a register of eligibles composed of experienced police officers or have one list with experienced and inexperienced candidates. who have applied for the position of police officer with the Village. The standards in this Chapter 5a and elsewhere in these Rules and Regulations and the Northbrook Municipal Code apply to applicants for lateral entry.

B. Commission Authority over Process. The Commission may create, and impose any process or element of the Lateral Entry process, including for example, but not limited to, the waiver of a part of an examination for a lateral entry applicant who is or was a full-time sworn police officer in a municipal, county, university, State, or federal law enforcement agency.

Section 5a.2 Application for Lateral Entry

A. Forms. Applications for lateral entry must be made on forms furnished by the Village or their designee. Applicants must comply with Section 4 above and complete the requirements of the forms.

B. Certification. An applicant for lateral entry must provide all documents as required in section 4.2.B and also must provide a copy of the applicant's certificate attesting to the applicant's successful completion of the Minimum Standards Basic Law Enforcement Training Course, as provided in the Illinois Police Training Act.

C. Experience. An applicant for lateral entry must be a full time certified police officer in good standing with their current law enforcement agency to apply.

D.

E.

F.

G.

Section 5a.5 Hiring Process

All applicants must submit themselves for each element of an examination for the rank of Police Officer at the times and places established by the Secretary of the Commission. An examination will consist of the elements outlined in Sections 5.1 and 5.2.

1.

Section 5a.6 Police Officer Lateral Entry Eligibility Lists

A. Establishment, Use, Replenishment, and Replacement of Eligibility List shall follow the procedure for maintenance of the police officer eligibility list as outlined in Chapter 3.

1.

B. Preference Points. The Commission will add preference points to a police officer lateral entry applicant's score prior to placement on the police officer lateral entry list consistent with Section 3.3 and as provided by law.

CHAPTER 6. APPLICATIONS FOR POLICE DEPARTMENT PROMOTIONAL POSITIONS

Section 6.1 Filing of Application.

An application for a promotional position in the Police Department must be filed with the Commission on an approved form. No application will be accepted until notice of an examination for a position has been given or has been waived in accordance with Section 2.2 of these Rules and Regulations. Also, no application will be accepted less than two weeks prior to the date of an examination. The Commission shall cause each application to be noted with the date and hour it was received, which time shall determine the timeliness and priority of filing.

Section 6.2 Special Standards.

The Commission may set particular standards for eligibility for a promotional position if the Commission determines that the position requires special qualifications.

Section 6.3 Disqualification.

A. Grounds. The Commission may refuse to examine, or after examination refuse to certify as eligible, or after certification as eligible refuse to retain on the Register of Eligibles, any applicant:

1. who is on probationary status; or

2. who is found lacking in any of the established general requirements stated in this Chapter or established by the Commission; or

3. who is a user of narcotics or other non-prescription drugs, or a habitual user of intoxicating beverages; is a gambler; or is not a person of good character; or

4. who has been convicted of a felony, a crime of moral turpitude, or a misdemeanor specifically listed in 65 ILCS 5/10-2.1-6 as amended from time to time; or

5. who has been shown to have attempted to practice any dishonesty, deception, or fraud in his or her application, examination, or other submissions to or dealings with the Commission, the Police Department, or the Village; or

6. who has failed to abide by the rules and procedures governing any aspect of the application process; or

7. who is physically or mentally unable to perform the duties of the position to which he or she seeks appointment; or

8. who has been dismissed from any public service for good cause; or

9. whose character or employment references are unsatisfactory; or

10. who has applied for a position in the Police Department and is, or has been, classified as a conscientious objector; or

11. who does not have a valid automobile driver's license; or

12. who does not satisfy the requirements of the job description published by the Village for the position for which he or she is applying.

B. Notification. Any applicant who has been disqualified will receive notice from the Commission of the disqualification.

Section 6.4 Release of Liability.

In consideration of being admitted to the examination process, all applicants shall execute and deliver to the Commission or its designated representative a release of all liability as a result of participating in the examinations, and all waivers and releases of information necessary to allow the Commission to complete all elements of the examinations, on forms approved by the Commission.

Section 6.5 Admission to Examination.

No person shall knowingly be admitted to any element of any examination who does not meet the minimum qualifications fixed for the position sought. The fact that a person is admitted to an element of an examination shall not be considered as evidence that he or she is qualified or eligible for the position.

Section 6.6 No Creation of Applicant Right or Interest.

Neither the filing of an application, nor the acceptance of an application, nor an applicant's satisfaction of the general or special qualifications for filing an application or being admitted to an examination, nor any provision of these Rules and Regulations shall be construed as creating any vested, property, or other right or interest in any person to apply for, be examined for, or be appointed to any position in the Departments.

Section 6.7 Correction of Applications.

A defective application will be returned to the applicant for correction, if the applicant otherwise is qualified for the position he or she seeks. All returned applications must be resubmitted with the time period established by the Commission or its designated representative.

CHAPTER 7. POLICE DEPARTMENT PROMOTIONAL EXAMINATIONS AND APPOINTMENTS

Section 7.1 Police Department Promotional Examination Elements; Grading.

A. Examination Elements. All applicants must submit themselves for each element of a promotional examination at the times and places established by the Commission. An examination for a promotional position will consist of the following elements and will require the indicated minimum passing grade:

Examination Element		Percent of Total Score
Element 1.	Seniority:	5 percent
Element 3.	Written Test:	30 percent
Element 4.	Oral Test:	45 percent
Element 5.	Chief's Merit Rating:	20 percent
Total Possible Score:		100 percent
Minimum Required Score:		75 percent

The examination elements may be administered in any order determined by the Commission. The scoring set forth in this Subsection does not include adjustments for military preferences.

B. Grading Generally. Each applicant's score will be calculated based on the percentages attributed to Elements 1, 3, 4, and 5.

The following process will be used to calculate the final score for an examination element:

- First, the points achieved for the examination element shall be expressed as a percentage of the total points possible for that element.
- Second, that percentage shall be multiplied by 100.
- Third, that product shall be multiplied by the Percent of Total Score in Subsection 7.1A to yield the final score for that element.

For example, the achievement of 129 points for a 150-point written test results in a final score for that test element of 21.5 points, derived as follows: 129 points *equals* 86 percent of 150 possible points; 86 percent *multiplied by* 100 *equals* 86; 86 *multiplied by* 25 percent (the Percent of Total Score for the written test) *equals* 21.5 points.

No information concerning grades and no test scores will be disclosed or provided to any applicant until after the posting of an Initial Eligibility List or such other time as may be designated specifically by the Commission. The names of persons failing the examination need not be posted, published, or disclosed by the Commission except to such person. Each applicant will be notified within a reasonable time of the result of his or her examination.

C. Method of Filling Vacancies. A vacancy in a promotional rank will be filled by promotion when practical. An examination for a promotional position will be competitive among the qualified members of the next lower rank who desire to submit themselves to the examination. 65 ILCS 5/10-2.1-11 and 10-2.1-15.

Section 7.2 Police Department Promotional Examination Element Descriptions and Procedures.

A. Element One—Seniority. The Commission shall award to each applicant for a promotional position points for full years of service within the Police Department according to the following schedule:

Full Years of Service Within Department	Points
• at least 1.5 years, but less than 3 years:	1
• at least 3 years, but less than 7 years:	3
• 7 years or more:	5

The maximum number of points that can be awarded for seniority is 5 points after 7 full years of service within the Department.

C. Element Three—Written Test. All applicants for a promotional position shall submit themselves for a written test.

1. Procedure. The written test for a promotional position shall be conducted and graded by two or more Commissioners or by a testing agency or service designated by the Commission, in a room or rooms designated by the Commission for that purpose at a Village facility or a testing agency's facility.

2. Finality. All test papers are the property of the Commission and any testing entity assisting the Commission, and the grading thereof by the Commission shall be final and conclusive and not subject to review except

only as provided by the Commission or the testing entity with the approval of the Commission.

D. Element Four—Oral Test. All applicants for a promotional position shall submit themselves for an oral test.

1. Written Statement. Each applicant shall submit, prior to the deadline established by the Commission, a written statement containing the reasons he or she should be selected for the promotional position for which he or she has applied. The statement should describe the applicant's qualifications for the position, including any items which he or she feels have prepared him or her for the position, any pertinent community service he or she has performed, and any other matters reflecting a commitment to Village community and to the Police Department.

2. Oral Test. The Commission shall conduct the oral test and may use examiners to assist it. The examiners shall discuss the merits of each applicant tested and shall grade the applicant.

3. Subjects of Oral Test. Applicants shall be asked questions that will enable the examiners to properly evaluate and grade them on maturity, communication skills, judgment, leadership ability, managerial ability, appearance, demeanor, emotional stability, self-confidence, friendliness, interest in the position, personal fitness for the position, and such other matters as are pertinent to the proper review and analysis of an applicant. Each applicant for a particular examination shall be asked questions in similar areas of inquiry so that the examiners can satisfactorily compare the merits of the applicants.

E. Element Five—Chief's Merit Rating. The Police Chief shall provide the Commission with his or her rating score of each applicant for the promotional position. Such rating shall be in a form determined by the Chief to be appropriate to judge the qualifications of the applicant individually and relative to the other applicants. The Commission shall add the Chief's rating score to each applicant's scores on the other elements of the examination.

Section 7.3 Police Department Promotional Appointments.

A. Basis of Appointment. Appointments to a promotional position for which a Register of Eligibles has been established shall be made in accordance with the Act. Promptly after notification by the Police Chief that a vacancy exists in a promotional rank, as designated by the Police Chief, the Commission shall appoint to fill the vacancy that applicant from among the three highest ranking applicants on the Register of Eligibles for that rank who in the opinion of a majority of the Commissioners is best suited to and qualified for the position to be filled, except that when a Register of Eligibles for a promotional rank contains fewer than three applicants, the choice shall be from such fewer applicants. 65 ILCS 5/10-2.1-14 and 10-2.1-15.

B. Waiver of Appointment. An applicant, within seven days after the date of notice from the Commission of his or her appointment, may request a waiver of the right to appointment. That request must be made in writing, signed by the applicant. That request must include a statement of the reasons for the request and ask that the Commission retain the applicant's name on the Register of Eligibles. The Commission may determine to strike the applicant's name from the Register of Eligibles or, if the Commission determines that the applicant's statement of reasons constitutes good and sufficient grounds for a waiver, then the Commission may approve the waiver. If the Commission approves the waiver, then the Commission shall retain the name of the applicant on the Register of Eligibles and shall fill the vacancy pursuant to the procedures of Subsection A of this Section. If the waiver is not approved, or if no request for waiver or response to the notice of appointment is received within the prescribed time, then the Commission shall strike the applicant's name from the Register of Eligibles pursuant to Section 3.6 of these Rules and Regulations and shall fill the vacancy pursuant to Subsection A of this Section. The Commission may approve no more than one waiver for an applicant.

C. Certificate of Appointment. After appointment to a promotional position in the Police Department, an applicant shall receive a Certificate of Appointment signed by the Chairperson and Secretary of the Commission.

CHAPTER 8. POLICE DEPARTMENT TEMPORARY APPOINTMENTS AND VOLUNTARY DEMOTIONS

Section 8.1 Police Department Temporary Appointments.

The Commission, at the request of the Village Board and without complying with the provisions of these Rules and Regulations otherwise applicable to appointments, shall make temporary appointments to the Police Department to prevent a stoppage of public business, to meet extraordinary situations, or to prevent the material impairment of the Police Department's ability to carry out its functions. Temporary appointments may not be made to exceed 60 days and no person may receive a temporary appointment more than twice in any calendar year. 65 ILCS 5/10-2.1-16.

Section 8.2 Police Department Voluntary Demotions.

Any member of the Police Department may request a demotion to a lower rank, subject to the approval of the Commission. Demotion will result in a reduction in compensation to a rate not exceeding the maximum rate of the lower rank.

ARTICLE III: FIRE DEPARTMENT HIRING

CHAPTER 9. FIRE DEPARTMENT REGISTERS OF ELIGIBLES

Section 9.1 Establishment of Fire Department Registers of Eligibles; Tied Scores.

The Secretary of the Commission or their designee shall establish and maintain a Register of Eligibles for each rank within the Fire Department, except for the position of Fire Chief and the Managerial Positions. A Register of Eligibles shall rank all applicants who have passed all elements of an examination for the stated rank in order of their relative excellence as determined by the examination and preferences, but without reference to priority of time of examination. In the event of tied scores, the tie will be broken by lot in the presence of at least two Commissioners, at a regular or special meeting of the Commission, in a manner the Commission determines is appropriate under the circumstances. To qualify for placement on the final Register of Eligibles, an applicant's total score, before the award of any preference points, must be at or above the minimum provided by the Act.

Section 9.2 Initial Fire Department Eligibility Lists.

A. Firefighter/Paramedic Positions. Within 60 days after all applicants for the rank of firefighter/paramedic who have completed the first three elements of the firefighter/paramedic examination (*see* Section 11.1), the Secretary shall prepare and post an Initial Eligibility List of the applicants who passed all of those elements, ranking those applicants in order of their relative excellence.

B. Promotional Positions. Within 60 days after all applicants for a promotional rank have completed all applicable elements of an examination (*see* Section 13.1), the Secretary shall prepare and post an Initial Eligibility List of the applicants who passed all of those elements, ranking those applicants in order of their relative excellence.

Section 9.3 Fire Department Preference Points.

A. Maximum Possible Fire Department Entry-Level Points. An applicant for an entry-level position in the Fire Department may receive preference points if that applicant qualifies for such points under this Section 9.3. The Commission may prescribe the maximum number of preference points awarded under this Section, but the maximum number of preference points may not be less than 10 points or more than 30 points. Points may be given only if a proper and valid claim for preference points has been made and only if the standards for such preference points have been met under the Act and these Rules and Regulations.

B. Available Fire Department Entry-Level Points. Entry-level preference points in the Fire Department may be awarded for veteran service, fire cadet completion, education, paramedic certification status, experience, and residency as follows:

1. Veteran Service Points. An applicant will be awarded 5 points if (a) the applicant was engaged in the active military or naval service of the United States for a total cumulative period of at least one year and was honorably discharged or (b) the applicant is currently or has been on inactive or reserve duty in such military or naval service for a total cumulative period of at least one year, except as provided in Subsection 9.3C1 of these Rules and Regulations.

2. Fire Study and Cadet Points. An applicant who has successfully completed two years of study in fire techniques or cadet training within a cadet program established under the rules of the Joint Labor and Management Committee, as defined in Section 50 of the Fire Department Promotion Act, may be awarded points in an amount set by the Commission prior to issuance of a notice of examination under Section 2.2 of these Rules and Regulations.

3. Education Points. An applicant who has obtained an associate's degree in the field of fire service or emergency medical services, or a bachelor's degree from an accredited college or university, may be awarded points in an amount set by the Commission prior to issuance of a notice of examination under Section 2.2 of these Rules and Regulations.

4. Paramedic Points. An applicant may be awarded 2½ points if the applicant, at the time of the examination, has obtained and holds a valid State of Illinois certification of an Emergency Medical Technician/Basic. Alternatively, an applicant may be awarded 5 points if the applicant, at the time of the examination, has obtained and holds a valid State of Illinois certification of an Emergency Medical Technician/Paramedic.

5. Experience Points. An applicant may be awarded up to 5 preference points under the following standards. This number of 5 experience points presumes a rating scale totaling 100 points for the Register of Eligibles. If fewer than 100 total points are used in the rating scale for the Register of Eligibles, then the points awarded under this Subsection b will be decreased proportionately.

    a. Paid-On-Call, Certified Firefighter Experience with Village. An applicant will be awarded 0.5 point for each year of successful service as a (a) paid-on-call or part-time certified Firefighter II, (b) State of Illinois or a nationally licensed EMT-B or EMT-I, or (c) any combination of these for the Village, if the applicant at the time of the examination has been serving as one or more of these continuously for at least two years immediately prior to the time of the examination except for any periods of military service or other absences excused by the Fire Chief. No excused absence will be considered a break in service, but no excused absence will be counted toward the minimum required two years of continuous service. The

applicant may be awarded up to a maximum of 2½ points under this Subsection a.

b. Certified Advanced Technician Firefighter and Licensed Paramedic Experience. An applicant will be awarded 1 point for each year of successful, continuous service as a certified Advanced Technician Firefighter or Firefighter III and State of Illinois or nationally licensed paramedic. To qualify for any point under this Subsection b, the most recent period of continuous one-year service must have occurred immediately prior to the time of the examination. The applicant may be awarded up to a maximum of 5 point under this Subsection b.

c. Other Experience. An applicant from outside the Village will be awarded 5 points if the applicant has been employed successfully and continuously as a full-time firefighter or firefighter-paramedic by fire protection district or another municipality within the State of Illinois for at least two years. To qualify for the 5 points under this Subsection c, the period of continuous employment must have occurred immediately prior to the time of the examination.

6. Residency Points. An applicant whose principal residence is located within the Village may be awarded points in an amount set by the Commission prior to issuance of a notice of examination under Section 2.2 of these Rules and Regulations.

C. Time and Method of Claiming Fire Department Entry-Level Preference Points.

1. Veteran Service Points. Within 10 days after the posting of an Initial Eligibility List, each applicant on that list who may claim preference points for veteran service must submit his or her claim for those veteran service points in writing to the Commission. Claims not made within that 10-day period will be deemed waived. The applicant, at the time of submitting a claim for veteran service points, must submit evidence of qualification for those points.

2. Paramedic and Experience Points. Within 10 days after the posting of an Initial Eligibility List, each applicant who may claim preference points for paramedic status or for paid-on-call or other experience must submit his or her claim for one or more of those preferences to the Commission. Claims not made at or before that time will be deemed waived. The applicant, at the time of submitting a claim for a preference, must submit evidence of qualification for that preference.

Paramedic and experience preference points will be added to the applicant's written grade prior to placement of the applicants on a final Register of Eligibles, but only if the applicant has completed the written examination with at least the minimum passing grade.

3. Fire Study and Cadet, Education, and Residency Points. Within 10 days after the posting of an Initial Eligibility List, each applicant on that list who may claim preference points for fire study and cadet, education, or residency must submit his or her claim for that preference in writing to the Secretary of the Commission or their designee. Claims not made within that 10-day period will be deemed waived. The applicant, at the time of submitting a claim for a preference, must submit evidence of qualification for that preference.

4. Limitation of Award of Preference Points. An applicant may not receive an amount of preference points under this Section 9.3 that would move the applicant ahead of any veteran on the Initial Eligibility List. Instead, the applicant may receive that number of preference points that will not move the applicant ahead of any veteran. If two or more applicants receiving preference points are prevented from receiving all of their points because they cannot move ahead of a veteran, then those applicants will be placed on the Initial Eligibility List below the veteran and in rank order based on the total preference points they would have received except for the prohibition of moving ahead of a veteran. In the event of tied scores, the tie will be broken by lot in the presence of at least two Commissioners, at a regular or special meeting of the Commission, in a manner the Commission determines is appropriate under the circumstances.

D. Fire Department Promotional Preference Points.

1. Military Service Points. Upon receipt of a valid claim of preference from an applicant for a promotional position in the Fire Department, the Secretary shall add $^{7}/_{10}$ of one point to the applicant's total examination score for each six months or fraction thereof of active military service, not exceeding 30 months.

2. One Time Only Preference. No person shall receive a preference for a promotional appointment after that person has received one promotion, during his or her employment by the Fire Department, from a Register of Eligibles on which he or she was allowed such preference.

Section 9.4 Final Fire Department Register of Eligibles.

After the process of adding preference points has been completed, the Secretary shall re-rank the applicants on each Initial Eligibility List according to their scores including preference points. Each applicant's order of eligibility as thereupon determined will be the basis for placement of the applicant on the Register of Eligibles.

Section 9.5 Additions to Fire Department Registers of Eligibles.

After determining the final order of eligibility for an Eligibility List, the Secretary shall immediately integrate that Eligibility List into the existing Register of Eligibles, if

one exists, which integration must be made in such a manner that all applicants are ranked on that Register of Eligibles in the order of their relative excellence as determined by examination and allowable preference points, but without reference to priority of time of examination or completion of any Initial Eligibility List. An applicant who was already on the existing Register of Eligibles and who took the current examination for the new Eligibility List will be ranked on the Register of Eligibles based on his or her performance on the current examination and not on his or her prior listing on the Register of Eligibles. The re-ranking of an applicant on a Register of Eligibles whose name already was included on that Register of Eligibles will not extend the time period for eligibility of that applicant to remain on that Register of Eligibles. After the transfer of the names of all applicants on an Initial Eligibility List to the Register of Eligibles, the Initial Eligibility List must be abolished and will be of no further force or effect.

Section 9.6 Removal of Names from Registers of Eligibles.

A. Entry-Level Registers. The Secretary shall strike from the Register of Eligibles for the rank of firefighter/paramedic the name of:

1. any applicant who may be disqualified pursuant to any provision of these Rules and Regulations; and

2. any applicant who has been on that Register of Eligibles for more than one year after the initial posting of that Register, regardless of when all examination elements have been administered and regardless of whether that Register of Eligibles has been integrated with new applicants, except that the Commission in its discretion may extend the two-year period of the entire Register of Eligibles up to a total of six additional months, if necessary; and

3. any applicant who ceases to meet the qualifications for the rank of firefighter/paramedic; and

4. any applicant who does not, or cannot, accept the position within three days after receiving notice of his or her appointment, except as otherwise provided in Subsection 11.3B of these Rules and Regulations.

B. Promotional Registers. The Secretary shall strike from the Register of Eligibles for a promotional rank the name of:

1. any applicant who may be disqualified pursuant to any provision of these Rules and Regulations; and

2. any applicant who has been on that Register of Eligibles for more than three years; and

3. any applicant who ceases to meet the qualifications for the rank to be filled from that Register of Eligibles; and

4. any applicant who does not, or cannot, accept the position within seven days after receiving notice of his or her appointment, except as otherwise provided in Subsection 11.3B of these Rules and Regulations.

CHAPTER 10. APPLICATIONS FOR POSITION OF FIREFIGHTER/PARAMEDIC

Section 10.1 Minimum Requirements and Standards for Firefighter/Paramedic Applicants.

A. Citizenship. At the time of filing an application, an applicant for a position in the Fire Department must be a citizen of the United States, or must be legally authorized to work in the United States under applicable laws and statutes.

B. Age.

1. Proof of Age. Each applicant must provide proof of his or her birth date at time of filing an application.

2. Maximum Age for Firefighter/Paramedic Position. No person who is 35 years of age or older is eligible to take an examination for the position of firefighter/paramedic unless that person has had previous employment as a firefighter for the Village. This age limitation does not apply to (a) any person previously employed as a full-time firefighter in a regularly constituted fire department of (i) any municipality or fire protection district located in Illinois, (ii) a fire protection district whose obligations were assumed by a municipality under Section 21 of the Illinois Fire Protection District Act, or (iii) a municipality whose obligations were taken over by a fire protection district or (b) any person who has served a municipality as a regularly enrolled volunteer, paid-on-call, or part-time firefighter, or (c) any person who turned 35 while serving as a member of the active or reserve components of any of the branches of the Armed Forces of the United States or the National Guard of any state, whose service was characterized as honorable or under honorable, if separated from the military, and is currently under the age of 40.

3. Minimum Age for Firefighter/Paramedic Position. No person who is younger than 21 years of age is eligible for employment as a firefighter/paramedic. A person who will reach the age of 21 years within six months after the date of examination stated in a notice of examination issued under Section 2.2 of these Rules and Regulations is eligible to take the examination, but may not be employed until reaching the age of 21 years.

B. Fingerprinting. Each applicant may be fingerprinted after successfully completing the written and physical ability elements of the entry-level examination. A classified set of the fingerprints of every applicant who is

offered employment as a firefighter/paramedic will be filed by the Commission with the Illinois Department of State Police and with the Federal Bureau of Investigation.

C. Physical Ability Exam- Applicants are required to undergo an examination of physical ability to perform the essential functions included in the duties they may be called upon to perform as a member of the fire department. The Chief may elect to conduct a properly validated physical ability test or to use the fire Service Candidate Physical Ability test (CPAT) with ladder certification for the purpose of test physical fitness. If CPAT is used, then each applicant must provide proof of a current valid CPAT card acquired within the last twelve (12) month period with their completed job application to qualify for placement on any list of eligible candidates. The CPAT shall be prepared and administered by an agency that is licensed by the International Association of Firefighters to administer the CPAT. Any costs associated with the CPAT certification will be at the expense of the applicants. If the Board conducts its own test, then the Board will give notice in the notice of examination. The physical ability examination shall be a pass/fail examination, and complies with applicable law.

D. Fire Department Minimum Education Standards. No person will be eligible to apply for a position in the Fire Department unless that person has a high school diploma or G.E.D. certificate, Emergency Medical Technician/Basic, and one of the following qualifications:

1. That person has successfully completed at least two years of studies—equaling an associate's degree, or 60 hours of course work, or equivalent credits—at a junior college, college, or university accredited by a nationally recognized accreditation agency; or

2. That person has qualified for and received State of Illinois certification an Paramedic; or

3. That person has qualified for and received State of Illinois certification as both a Basic Operations Firefighter or Firefighter II.

E. Fire Department Special Standards. The Secretary of the Commission or their designee at recommendation of the Chief may set, at the time that it calls an examination, particular standards for eligibility for the rank of firefighter/paramedic if the Chief determines that the position requires special qualifications. The Chief also may require evidence from each applicant establishing that the applicant meets those particular standards.

Section 10.2 Fire Department Application Form, Basic Standards.

A. Application Form; Completion. The Secretary of the Commission or their designee shall furnish the application form, which form must be completed in its entirety by any applicant, including all supplementary information and documentation.

B. Supplementary Information. At the time of filing an application, the applicant must furnish the following:

1. a certified copy of his or her birth certificate;

2. a copy of his or her high school diploma or its equivalent;

3. a copy of his or her transcripts of post-high school study, if applicable;

4. a copy of his or her State of Illinois certifications as Emergency Medical Technician/Paramedic or Basic Operations Firefighter or Firefighter II and Emergency Medical Technician/Basic, if applicable;

5. a copy of his or her military service record, discharge papers, and U.S. Government Form DD214, if applicable;

6. a copy of his or her driver's license;

7. a copy of each other certificate or license required by these Rules and Regulations; and

8. a copy of his or her college or university degree and, if requested, a copy of a certified transcript of his or her course work from an accredited college or university.

C. General Character, Health. An applicant must be of good moral character, of temperate habits, and must be physically able and in a sufficient state of health to perform the duties of the position for which he or she is applying. The burden of establishing compliance with these standards rests on the applicant.

D. Exclusion for False Statements. A false statement knowingly made by a person in an application, or connivance in any false statement made in any supplementary information that may accompany the application, or complicity in any fraud related to an application or supplementary information shall be regarded as good cause for exclusion from the examination.

Section 10.3 Filing of Fire Department Application.

The application for the position of firefighter/paramedic must be filed, prior to taking an examination, with the Secretary of the Commission or with an agency or representative designated by the Chief. No application will be accepted until notice of an examination for a position has been given in accordance with Section 2.2 of these Rules and Regulations, and applications will be accepted only during the period designated by the Commission pursuant to Section 2.2. The recipient of the application on behalf of the Commission shall note on the application the date it was received. Each applicant shall be responsible for advising the Secretary of the Commission or their designee of any changes in his or her address, email or telephone number.

Section 10.4 Disqualification.

A. Grounds. The Commission may refuse to examine, or after examination refuse to certify as eligible, or after certification as eligible refuse to retain on the Register of Eligibles, any applicant:

1. who is found lacking in any of the established general requirements, or in any special standards established pursuant to Subsection 10.1E of these Rules and Regulations, for an entry-level position stated in these Rules and Regulations or in the Act; or

2. who is a user of narcotics or other non-prescription drugs, or a habitual user of intoxicating beverages; is a gambler; or is not a person of good character; or

3. who has been convicted of a felony, a crime of moral turpitude, or a misdemeanor specifically listed in 65 ILCS 5/10-2.1-6 as amended from time to time; or

4. who, in the judgment of the Commission, has practiced or attempted to practice any dishonesty, deception, or fraud in his or her application, examination, or other submissions to or dealings with the Commission, the Fire Department, or the Village; or

5. who has failed to abide by the rules and procedures governing any aspect of the application process; or

6. who is physically or mentally unable to perform the duties of the position to which he or she seeks appointment; or

7. who has been dismissed from any public service for good cause; or

8. whose character or employment references are unsatisfactory; or

9. who, for a position in the Fire Department, does not meet the standards set forth in Subsection 10.1D of these Rules and Regulations; or

10. who has failed to appear for, or failed, any element of the examination or otherwise has not successfully completed any portion of the examination process; or

11. who does not have a valid automobile driver's license.

B. Notification;. Any applicant who has been disqualified will receive notice from the Commission of the disqualification.

Section 10.5 Release of Liability.

In consideration of being admitted to the examination process, all applicants must execute and deliver to the Commission or its designated representative a release of all liability as a result of participating in the examinations, and all waivers and releases of information necessary to allow the Commission to complete all elements of the examination, on forms approved by the Commission.

Section 10.6 Admission to Examination.

No person shall knowingly be admitted to any element of any examination who does not meet the minimum qualifications established for the position of firefighter/paramedic. The fact that a person is admitted to an element of an examination will not be considered as evidence that he or she is qualified or eligible for the position.

Section 10.7 No Creation of Applicant Right or Interest.

Neither the filing of an application, nor the acceptance of an application, nor an applicant's satisfaction of the general or special qualifications for filing an application or being admitted to an examination, nor any provision of these Rules and Regulations may be construed or applied as creating any vested, property, or other right or interest in any person to apply for, be examined for, or be appointed to any position in the Departments.

Section 10.8 Correction of Application.

A defective application will be returned to the applicant for correction, if the applicant otherwise is qualified for the position he or she seeks. A returned application must be resubmitted within the time period established by the Commission or its designated representative.

CHAPTER 11. EXAMINATIONS AND APPOINTMENTS FOR POSITION OF FIREFIGHTER/PARAMEDIC

Section 11.1 Firefighter/Paramedic Examination Elements; Grading.

A. Examination Elements. All applicants must submit themselves for each element of an entry-level examination at the times and places established by the Commission. An examination for an entry-level position will consist of the following elements and shall require the indicated minimum passing grade:

Examination Element		Minimum Passing Grade
Element 1.	Orientation.	As required
Element 2.	Physical Ability Test:	Pass
Element 3.	Written Test	As provided in the Act

[See Subsection I of Section 11.2 below for timing of subsequent examination elements.]

Element 4.	Preliminary Background	Pass
Element 5.	Oral Interview	Pass
Element 6.	Character and Background Check & Polygraph	Pass
Element 7.	Psychological & Medical Tests	Pass

The Secretary of the Commission may rearrange the order for administering examination elements 2, 3, 4, 5, and 6. The failure to achieve the minimum passing grade in any examination element disqualifies the applicant from any further participation.

B. Grading Generally. No information concerning grades and no test scores shall be disclosed or provided to any applicant until after the posting of an Initial Eligibility List or such other time as may be designated specifically by the Commission. The names of persons failing the examination need not be posted, published, or disclosed by the Commission except to such person. Each applicant shall be notified within a reasonable time of the result of his or her examination. All examination files and materials, if they are retained, shall be maintained as files of the Commission and not of the Fire Department. Such files shall be physically maintained in the location or locations designated by the Village Manager.

Section 11.2 Firefighter/Paramedic Element Descriptions and Procedures; Deferral.

A. Element One—Orientation. The Fire chief may schedule an orientation. If the Fire Chief schedules an orientation, all applicants must attend an orientation scheduled by the Fire Chief and conducted by persons designated by the Commission. The failure to attend the orientation will constitute failure of this examination element.

B. Element Two—Physical Ability Test. All applicants who attended the orientation must take a physical ability test. Only applicants who have participated and passed the designated test will be allowed to continue the process. Applicants who fail to achieve a passing grade on the physical ability test will be so notified.

The "Fire Fighter Candidate Physical Ability Test" (C.P.A.T.), developed and endorsed by the International Association of Fire Fighters and the International Association of Fire Chiefs, may be used for the physical ability test, as determined

by the Commission. The Commission may make changes to the elements of the C.P.A.T. and supplement those elements with additional job-related elements.

See Subsection J of this Section below for re-administration of physical ability test.

C. Element Three—Written Test. All applicants who have successfully passed all prior elements of the examination must submit themselves for a written test.

1. Proof of Completion of Physical Ability Test; Valid Driver's License. Immediately before taking the written test, each applicant must present proof of successful completion of the physical ability test within the twelve-month time period immediately preceding the written test and must present a copy of his or her driver's license.

2. Procedure. The written test will be conducted and graded by two or more Commissioners or by a testing agency or service designated by the Commission, in a room or rooms designated by the Commission for that purpose at a Village facility or a testing agency's facility.

3. Finality. All test papers are the property of the Commission and any entity assisting the Commission with the test, and the grading thereof by the Commission shall be final and conclusive and not subject to review except only as provided by the Commission or the testing entity with the approval of the Commission.

D. Element Four—Preliminary Character and Background Check. At the request of the Secretary, the Village shall conduct a preliminary character and background investigation of each applicant who has successfully passed all prior elements of the examination. The investigation must review available data and information related to the applicant's compliance with the general qualifications and criteria for the rank of firefighter paramedic set out in these Rules and Regulations and such other data and information as are pertinent to a proper review and analyses of the applicant.

D. Element Five—Oral Interview. At the request of the Secretary of the Commission or their designee, selected shall submit themselves for an oral interview.

1. Procedure. The oral interview of each applicant will be conducted by individuals from the Human Resources Division of the Village Manager's Office, Fire department (as assigned by the Chief) and at least one Commissioner. The Interview will be administered to those applicants identified by the Secretary or their designee in the order of their standing after the written test and as outlined in Chapter 11.4A. At the end of the test of each applicant, the interviewers may discuss the merits of that applicant. Each interviewer must individually evaluate the applicant. The applicant's final evaluation will be the average of all the interviewers' evaluations. A passing score is defined as 70% or higher.

2. Subjects of Oral Interview. Applicants will be asked questions that will enable the examiners to properly evaluate them on maturity,

communication skills, judgment, leadership ability, managerial ability, appearance, demeanor, emotional stability, self-confidence, friendliness, interest in the position, personal fitness for the position, and such other matters as are pertinent to the proper review and analysis of an applicant. Each applicant for a particular examination must be asked questions in similar areas of inquiry so that the examiners can satisfactorily compare the merits of the applicants.

E. Element Six—Detailed Character and Background Check and Polygraph. At the request of the Secretary of the Commission, the Village if appropriate, shall conduct a detailed character and background check of an applicant for an entry-level position who has successfully passed all prior elements of the examination. The check shall review the applicant's employment history, references, educational background, credit history, litigation history, military record, driving record, neighborhood and community standing and service, and such other data and information pertinent to a proper review and analyses of the applicants. As a part of the detailed background check, applicants must submit to a polygraph device deceptive test, commonly known as a lie detector test, at a time and place designated by the Secretary of the Commission. Results of the polygraph test must be submitted to the Commission and HR Division of Village Manager's Office for its evaluation. An unsatisfactory result on the polygraph test may subject the applicant to disqualification or to additional testing, at the discretion of the Secretary of the Commission, including but not limited to an additional background and character check, an additional oral test, an additional polygraph test, or any combination of these tests.

F.

G. Element Seven—Psychological & Medical Tests. When directed by the Secretary of the Commission or their designee and after a conditional offer of employment has been made, an applicant who has successfully passed all prior elements of the examination must submit to a psychological test to be given by a qualified examiners selected by the Village. The test must be designed and administered solely to determine an applicant's suitability and fitness for the rank of firefighter/paramedic. The examiner shall prepare and submit a report of the examination to the Commission for its evaluation. The Commission shall determine, based on such report, whether the applicant passed the test, whether additional psychological testing is necessary, or whether the applicant failed the test.

When directed by the Secretary of the Commission or their designee and after a conditional offer of employment has been made, an applicant who has successfully passed all prior elements of the examination must submit to a medical test, including without limitation a vision test and drug screening, by a licensed physician designated by the Village. The test must be designed and administered for the purpose of determining fitness for, and physical ability to perform, all of the duties of the position sought. A medical test must be completed not earlier than 180 days prior to the date of appointment. A positive result on a confirmatory

drug screening test will be a sufficient basis for a determination by the Secretary of the Commission or their designee that an applicant has failed the medical test. At any point in the examination process, an applicant may be requested to submit evidence of vision sufficient to meet the standards of the Department to which he or she is applying or to submit to a vision examination to determine if his or her vision meets such standards. Each applicant shall be responsible for advising the Secretary of the Commission or their designee of any changes in his or her physical condition subsequent to the medical test. An applicant may be required to submit to a follow-up medical test prior to appointment to a position.

I. Deferral of Examination Elements until Conditional Offer of Employment. Examination element 7 will not be administered until after the Initial Eligibility List is created, preference points are awarded, a Register of Eligibles has been created, and a conditional offer of employment has been made.

J. Re-administration of Physical Ability Test. If an applicant has been on the Register of Eligibles for more than one year after the date of his or her physical ability test and the applicant becomes eligible for a conditional offer of employment as a firefighter/paramedic, then the Commission may require that applicant to take a second physical ability test prior to being employed. If that applicant does not pass that second physical ability test, then the applicant may not be appointed but the applicant's name may be retained on the Register of Eligibles. If that applicant again becomes eligible for a conditional offer of employment as a firefighter/paramedic, then the Commission may require that applicant to take a third physical ability test prior to being employed. If that applicant does not pass that third physical ability test, then the applicant may not be appointed and the applicant's name must be stricken from the Register of Eligibles.

Section 11.3 Appointments of Firefighter/Paramedics.

A. Basis of Appointment; Notice. Appointments to the rank of firefighter/paramedic will be made in accordance with the Act. Promptly after a vacancy exists in the rank of firefighter/paramedic and that the Village has authorized the filling of that vacancy, the Chiefshall appoint to fill the vacancy the highest-ranked, qualified applicant on the Register of Eligiblesfor that position. For each appointment, however, the Secretary of the Commission or their designee may take one of the following additional two actions:

1. If the Chief determines that the highest ranked applicant fails to meet the minimum standard for firefighter/paramedic, or if the Chief believes an alternate applicant would better serve the needs of the Fire Department, then the Chief may pass over the highest ranked applicant and may appoint either (a) any applicant who is ranked in the top five percent of all applicants on the Register of Eligibles or (b) any person who is among the top five highest ranked applicants on the Register of Eligibles if the number of applicants who have a ranking in the top five percent of all applicants on the Register of Eligibles is fewer than five people.

2. The Chief, at their discretion, may fill a vacancy in the rank of firefighter/paramedic by appointing an applicant from the Register of Eligibles who has been awarded a certificate attesting to the applicant's successful completion of the Illinois EMT-P course and licensed as an Illinois EMT-P, ahead of applicants who have not achieved that certification and license.

The Secretary of the Commission or their designee will contact the chosen applicant to be notified of the appointment twice by telephone or e-mail over a three-work-day period. If the applicant does not respond within 24 hours after the second notice, then the applicant will be deemed to have waived his or her right to the appointment.

B. Waiver of Appointment. An applicant, within three days after the date of notice from the Secretary of the Commission of a conditional offer of appointment or an appointment, may waive the right to that appointment. That request must be made in writing, signed by the applicant. If the Secretary of the Commission receives a proper notice of waiver, then the Secretary of the Commission shall retain the name of the applicant on the Register of Eligibles until the next opportunity for an appointment and shall fill the current vacancy (or vacancies, if more than one appointment is being made at that time) pursuant to the procedures of Subsection A of this Section. If no notice of waiver or response to the notice of appointment is received within the prescribed time, then the Secretary of the Commission shall strike the applicant's name from the Register of Eligibles pursuant to Subsection 9.6A of these Rules and Regulations and shall fill the vacancy pursuant to Subsection A of this Section. No applicant may be allowed more than one waiver.

In the event of a subsequent vacancy to be filled from the Register of Eligibles, and the applicant is chosen by the Commission, the Commission will cause the applicant to be notified twice by telephone or e-mail over a three-work-day period. If the applicant does not respond within 24 hours after the second notice, then the applicant will be removed from the Register of Eligibles.

C. Certificate of Appointment. After appointment to an entry-level position in the Fire Department, the new firefighter/paramedic will receive a Certificate of Appointment signed by the Chief and Secretary of the Commission.

D. Oath of Office and Bond. Before entering into duty, the new firefighter/paramedic must take such oath and enter into such bond as provided by the Illinois law and Village ordinances.

Section 11.4 Fire Department Probation.

A. Probation Generally. Each person appointed to as a firefighter/paramedic will be on probation for a period of 12 months. Time spent as follows will not count toward the required 12 months of probation: (1) approved leave in excess of a cumulative

total of 30 days and (2) time spent outside of the Fire Department and Village attending a fire training academy. The inability of any appointee to successfully complete the courses or the certification examination process for Emergency Medical Technician/Paramedic will be grounds for dismissal and the appointee may be discharged without any hearing for failure to meet the requirements.

B. No Rights. During his or her probationary period, the firefighter/paramedic will be deemed not to have any vested, property, or other right or interest in his or her employment with the Village, and nothing in this Section or in any other provision of these Rules and Regulations may be construed or applied to create any such right or interest.

C. Dismissal. During his or her probationary period, the firefighter/paramedic may be dismissed by the Chief with the approval of the Village Manager's Office If in the Chief's opinion, it is not in the best interest of the Fire Department to continue the employment of that firefighter/paramedic.

D. Suspension. During a probationary period, the Fire Chief with the approval of the Village Manager's Office or designee may suspend an appointee without pay, except that no suspension may be imposed without first giving the firefighter/paramedic written notice thereof setting forth the basis therefor and advising the firefighter/paramedic of his or her opportunity to be heard by the Chief or his or her designee concerning the relevant facts and circumstances.

E. Disciplinary Provisions Not Applicable. The provisions of Chapter 15 of these Rules and Regulations do not apply to the dismissal or suspension of a probationary firefighter/paramedic. Nothing in this Section 11.4 may be construed to alter the application of, or to limit the effect of, the provisions of the Firemen's Disciplinary Act, 50 ILCS 745/1 *et seq*., when applicable to the investigation of misconduct of any firefighter/paramedic.

CHAPTER 12. APPLICATIONS FOR FIRE DEPARTMENT PROMOTIONAL POSITIONS

Section 12.1 Filing of Application.

An application for a promotional position in the Fire Department must be filed with the Commission on an approved form. No application will be accepted until notice of an examination for a position has been given or has been waived in accordance with Section 2.2 of these Rules and Regulations. Also, no application will be accepted less than two weeks prior to the date of an examination. The Commission shall cause each application to be noted with the date and hour it was received, which time shall determine the timeliness and priority of filing.

Section 12.2 Special Standards.

A. General Authority. The Commission may set particular standards for eligibility for a promotional position if the Commission determines that the position requires special qualifications.

B. Minimum Fire Department Experience. Every applicant for a promotional position in the Fire Department must have not less than three years' experience as a permanent, sworn member of the Fire Department at the time of filing his or her application.

Section 12.3 Disqualification.

A. Grounds. The Commission may refuse to examine, or after examination refuse to certify as eligible, or after certification as eligible refuse to retain on the Register of Eligibles, any applicant:

1. who is on probationary status; or

2. who is found lacking in any of the established general requirements stated in Section 10.1 of these Rules and Regulations or the special standards stated in Section 12.2 of these Rules and Regulations or established by the Commission; or

3. who is a user of narcotics or other non-prescription drugs, or a habitual user of intoxicating beverages; is a gambler; or is not a person of good character; or

4. who has been convicted of a felony, a crime of moral turpitude, or a misdemeanor specifically listed in 65 ILCS 5/10-2.1-6 as amended from time to time; or

5. who has been shown to have attempted to practice any dishonesty, deception, or fraud in his or her application, examination, or other submissions to or dealings with the Commission, the Fire Department, or the Village; or

6. who has failed to abide by the rules and procedures governing any aspect of the application process; or

7. who is physically or mentally unable to perform the duties of the position to which he or she seeks appointment; or

8. who has been dismissed from any public service for good cause; or

9. whose character or employment references are unsatisfactory; or

10. who has applied for a position in the Fire Department and is, or has been, classified as a conscientious objector; or

11. who does not have a valid automobile driver's license; or

12. who does not satisfy the requirements of the job description published by the Village for the position for which he or she is applying.

B. Notification. Any applicant who has been disqualified will receive notice from the Commission of the disqualification.

Section 12.4 Release of Liability.

In consideration of being admitted to the examination process, all applicants shall execute and deliver to the Commission or its designated representative a release of all liability as a result of participating in the examinations, and all waivers and releases of information necessary to allow the Commission to complete all elements of the examinations, on forms approved by the Commission.

Section 12.5 Admission to Examination.

No person shall knowingly be admitted to any element of any examination who does not meet the minimum qualifications fixed for the position sought. The fact that a person is admitted to an element of an examination shall not be considered as evidence that he or she is qualified or eligible for the position.

Section 12.6 No Creation of Applicant Right or Interest.

Neither the filing of an application, nor the acceptance of an application, nor an applicant's satisfaction of the general or special qualifications for filing an application or being admitted to an examination, nor any provision of these Rules and Regulations shall be construed as creating any vested, property, or other right or interest in any person to apply for, be examined for, or be appointed to any position in the Departments.

Section 12.7 Correction of Applications.

A defective application will be returned to the applicant for correction, if the applicant otherwise is qualified for the position he or she seeks. All returned applications must be resubmitted with the time period established by the Commission or its designated representative.

CHAPTER 13. FIRE DEPARTMENT PROMOTIONAL EXAMINATIONS AND APPOINTMENTS

Section 13.1 Fire Department Promotional Examination Elements; Grading.

A. Examination Elements. All applicants must submit themselves for each element of a promotional examination at the times and places established by the Commission. An examination for a promotional position will consist of the following elements and will require the indicated minimum passing grade:

Lieutenant Examination Element		Percent of Total Score
Element 1.	Seniority:	10 percent
Element 3.	Written Test:	30 percent
Element 4.	Oral Test:	10 percent
Element 5.	Chief's Merit Rating:	10 percent
Element 6.	Officer Evaluation	10 percent
Element 7.	Assessment Center	30 percent
Total Possible Score:		100 percent
Minimum Required Score:		75 percent

The scoring set forth in this Subsection does not include adjustments for military preferences.

Captain Examination Element		Percent of Total Score
Element 1.	Seniority:	10 percent
Element 2.	Written Test:	20 percent
Element 4.	Chief's Merit Rating:	20 percent
Element 5.	Officer Evaluation	10 percent
Element 6.	Assessment Center	40 percent
Total Possible Score:		100 percent
Minimum Required Score:		70 percent

The scoring set forth in this Subsection does not include adjustments for military preferences.

B. Grading Generally. Each applicant's score will be calculated based on the percentages attributed to Elements 1, 3, 4, 5, 6, and 7. The following process will be used to calculate the final score for an examination element:

- First, the points achieved for the examination element shall be expressed as a percentage of the total points possible for that element.
- Second, that percentage shall be multiplied by 100.
- Third, that product shall be multiplied by the Percent of Total Score in Subsection 7.1A to yield the final score for that element.

For example, the achievement of 129 points for a 150-point written test results in a final score for that test element of 21.5 points, derived as follows: 129 points *equals* 86 percent of 150 possible points; 86 percent *multiplied by* 100 *equals* 86; 86 *multiplied by* 25 percent (the Percent of Total Score for the written test) *equals* 21.5 points.

No information concerning grades and no test scores will be disclosed or provided to any applicant until after the posting of an Initial Eligibility List or such other time as may be designated specifically by the Commission. The names of persons failing the examination need not be posted, published, or disclosed by the Commission except to such person. Each applicant will be notified within a reasonable time of the result of his or her examination.

C. Method of Filling Vacancies. A vacancy in a promotional rank will be filled by promotion when practical. An examination for a promotional position will be competitive among the qualified members of the next lower rank who desire to submit themselves to the examination. 65 ILCS 5/10-2.1-11 and 10-2.1-15.

Section 13.2 Fire Department Promotional Examination Element Descriptions and Procedures.

A. Element One—Seniority. The Commission shall award to each applicant for a promotional position 1/12 of 1 point for full months of service within the Fire Department Lieutenant promotional points are calculated starting at 24 months after hire. Captain promotional points are calculated starting at 48 months after hire.

The maximum number of points that can be awarded for seniority is 10 points after 144 months of service for Lieutenant or 168 months of service for Captain.

B.

C. Element Three—Written Test. All applicants for a promotional position shall submit themselves for a written test.

1. Procedure. The written test for a promotional position shall be conducted and graded by a testing agency or service designated by the Commission.

2. Finality. All test papers are the property of the Commission and any entity assisting the Commission with the test, and the grading thereof by the Commission shall be final and conclusive and not subject to review by any other board or tribunal of any kind or description.

D. Element Four—Oral Test. All applicants for a promotional position shall submit themselves for an oral test.

1. Written Statement. Each applicant shall submit, prior to the deadline established by the Commission, a written statement containing the reasons he or she should be selected for the promotional position for which he or she has applied. The statement should describe the applicant's qualifications for the position, including any items which he or she feels have prepared him or her for the position, any pertinent community service he or she has performed, and any other matters reflecting a commitment to Village community and to the Fire Department.

2. Oral Test. The Commission shall conduct the oral test. The Commission shall discuss the merits of each applicant tested and shall grade the applicant.

3. Subjects of Oral Test. Applicants shall be asked questions that will enable the examiners to properly evaluate and grade them on maturity, communication skills, judgment, leadership ability, managerial ability, appearance, demeanor, emotional stability, self-confidence, friendliness, interest in the position, personal fitness for the position, and such other matters as are pertinent to the proper review and analysis of an applicant. Each applicant for a particular examination shall be asked questions in similar areas of inquiry so that the examiners can satisfactorily compare the merits of the applicants.

E. Element Five—Chief's Merit Rating. The Fire Chief shall provide the Commission with his or her rating score of each applicant for the promotional position. Such rating shall be in a form determined by the Chief to be appropriate to judge the qualifications of the applicant individually and relative to the other applicants. The Commission shall add the Chief's merit rating score to each applicant's scores on the other elements of the examination.

F. Element Six—Superior Office Evaluation. All Fire Department officers superior in rank to the applicants shall evaluate each applicant for the promotional position and provide the Commission with their combined rating score of each applicant for the promotional position. Such rating shall be in a form determined by the

superior officers to be appropriate to judge the qualifications of the applicant individually and relative to the other applicants. The Commission shall add the Superior Officer Evaluation rating score to each applicant's scores on the other elements of the examination.

G. Element Seven—Assessment Center. All applicants for the promotional position shall submit themselves for evaluation at an assessment center designated by the Village, with elements approved by the Village designed to judge the qualifications of the applicants. The Commission shall add the results provided by the assessment center to each applicant's scores on the other elements of the examination.

Section 13.3 Fire Department Promotional Appointments.

A. Basis of Appointment. Appointments to a promotional position for which a Register of Eligibles has been established shall be made in accordance with the Act. Promptly after notification by the Secretary that a vacancy exists in a promotional rank, the Commission shall appoint to fill the vacancy the person with the highest ranking on the final promotion list for that rank, except that the Commission shall have the right to pass over that person and appoint the next highest ranked person on the list if the Commission has reason to conclude that the highest ranking person has demonstrated substantial shortcomings in work performance or has engaged in misconduct affecting the person's ability to perform the duties of the promoted rank since the posting of the promotion list. If the highest ranking person is passed over, the Commission shall document its reasons for its decision to select the next highest ranking person on the list. Unless the reasons for passing over the highest ranking person are not remediable, no person who is the highest ranking person on the list at the time of the vacancy shall be passed over more than once. 50 ILCS 742/20

B. Waiver of Appointment. Any candidate may refuse a promotion once without losing his or her position on the final adjusted promotion list. Any candidate who refuses promotion a second time shall be removed from the final adjusted promotion list, provided that such action shall not prejudice a person's opportunities to participate in future promotion examinations.

CHAPTER 14. FIRE DEPARTMENT TEMPORARY APPOINTMENTS AND VOLUNTARY DEMOTIONS

Section 14.1 Fire Department Temporary Appointments.

The Commission, at the request of the Village Board and without complying with the provisions of these Rules and Regulations otherwise applicable to appointments, shall make temporary appointments to the Fire Department to prevent a stoppage of public business, to meet extraordinary situations, or to prevent the material impairment of the Fire Department's ability to carry out its functions. Temporary appointments may not

be made to exceed 180 days and no person may receive a temporary appointment more than twice in any calendar year. 65 ILCS 5/10-2.1-16.

Section 14.2 Fire Department Voluntary Demotions.

Any member of the Fire Department may request a demotion to a lower rank, subject to the approval of the Commission. Demotion will result in a reduction in compensation to a rate not exceeding the maximum rate of the lower rank.

ARTICLE IV: DISCIPLINE

CHAPTER 15. SUSPENSIONS, REMOVALS, DEMOTIONS, AND DISCHARGES

Section 15.1 Collective Bargaining Agreements; Just Cause Required.

A. Collective Bargaining Agreements. The provisions of current, valid bargaining agreements between the Village and members of the Fire Department or Police Department shall apply to suspension, removal, discharge, or demotion.

B. Just Cause Required. Except as provided in Section 158 of this Chapter, no member of the Fire Department or Police Department shall be suspended, removed, discharged, or demoted except for just cause.

Section 15.2 Suspensions; Appeals.

A. Suspensions. The Fire Chief or Police Chief shall have the right to suspend any member of the Fire Department or Police Department for a period not exceeding five days without pay by serving a written notice of suspension on such member that sets out the facts constituting just cause for suspension. Any member so suspended may appeal the suspension to the Commission by filing notice of appeal within five days after service of written notice of such suspension, regardless of when the suspension is to be served. A hearing shall be held on appeal, in accordance with the provisions of Sections 15.4, 15.5, and 15.6 of this Chapter, except that the member so suspended shall have the burden of establishing by clear and convincing evidence that just cause for the suspension does not exist.

B. Appeal. On such appeal, the Commission shall review the action of the Fire Chief or Police Chief to determine if just cause exists in light of all the evidence presented. The Commission may sustain the action of the Fire Chief or Police Chief, may reverse the action of the Fire Chief or Police Chief with instructions that the member so suspended shall receive his or her pay for the period involved, may suspend the member for a period of not more than 30 days, or may discharge the member, depending on the evidence presented.

Section 15.3 Charges.

A. Complainant. Charges may be brought against a member by the Fire Chief, the Police Chief, or the Village Manager.

B. Charges. Charges shall be in writing, shall be signed by the complainant, and shall state with specificity the facts alleged to constitute just cause for suspension, removal, discharge, or demotion. Such charges shall be filed with the Commission and shall be served upon the respondent.

Section 15.4 Pre-Hearing Procedures.

A. Hearing Date. Upon the filing of a charge, the Commission shall set the date, time, and place for hearing, which hearing date shall be within 30 days after the filing date.

B. Notice of Hearing. The Commission shall cause notice of hearing to be served on the parties promptly and not less than five days prior to the hearing date.

C. Answer. The respondent may file a written answer to the charges. Such written answer shall be signed by the respondent, shall be filed with the Commission, and shall be served on the complainant not less than 48 hours prior to the hearing.

D. Reply. The complainant may reply to any affirmative matter contained in such answer by signing, filing, and serving such reply not less than eight hours prior to the hearing.

E. Continuance. Motions for continuance of the hearing made by either party shall be in writing and shall be filed with the Commission and served on the opposing party not less than 48 hours prior to the time set for hearing. The Commission may waive said requirements upon good cause being shown and a finding that no prejudice will result to any party from any such waiver. The Commission may grant or deny a continuance on the motion of either party or on its own motion, but no continuance that extends the commencement of the hearing beyond 30 days from the filing date shall be granted. If a continuance is granted on the motion of a respondent who has been suspended by the Commission, with or without pay, pursuant to Subsection I of this Section and said continuance causes postponement of the conclusion of the hearing to a date more than 30 days after the date on which charges were filed, a waiver of pay shall be required for the period beginning with the 31st day after such filing and continuing to the date of the conclusion of the hearing.

F. Attendance of Witnesses. Either party, at any time prior to the hearing, may file applications with the Commission for the issuance of subpoenas for any person or persons to appear at the hearing, or to have any such person produce books, papers, records, accounts, and other documents at the hearing. Such application shall be in writing and shall adequately identify such person, persons, or documents sought to be subpoenaed. The Commission, or any Commissioner, shall issue such subpoenas if the Commission deems the testimony of such person or such documents to be relevant to the hearing. Such subpoenas may be authorized either by resolution at a Commission meeting or by the signature of any two Commissioners without a meeting. Subpoenas may be served by any person of the age of 21 years or more.

G. Evidence Depositions. Evidence depositions may be taken and utilized in the manner and under the conditions prescribed therefor in courts of general jurisdiction in the State of Illinois.

H. Stipulations. The parties may stipulate and agree in writing, or on the record, as to evidentiary facts or other matters. Any facts so stipulated shall be considered as evidence in the proceeding.

I. Suspension Before Hearing. The Commission may suspend the respondent pending hearing, with pay or without pay, for not more than 30 days. In the event that the Commission, after hearing, determines that the charges are not sustained, the respondent shall receive any pay withheld during the suspension period.

Section 15.5 Hearing.

A. Commencement and Adjournment. A hearing shall be commenced within 30 days after the filing of the charges and may be adjourned from time to time thereafter for lack of a quorum or in order to complete the hearing at a later date.

B. Quorum to Conduct Hearing. Two Commissioners shall constitute a quorum of the Commission for the conducting of a hearing.

C. Public Hearings and Closed Hearings. All disciplinary hearings of the Commission shall be held in accordance with the Illinois Open Meetings Act. The hearing shall be public, but at any time before or during such hearing the Commission may determine that such hearing, or any portion of such hearing (except for final action), shall be closed.

D. Counsel. The respondent may, at his or her election, be represented by any attorney at law licensed to practice law in the State of Illinois. Such attorney shall file and serve his or her appearance with the Commission.

E. Oath. All witnesses shall be sworn under oath prior to testifying. The oath may be administered by any member of the Commission or an Illinois notary public.

F. Order of Proceedings; Cross Examination. After disposition of any preliminary motions for continuance, motions directed to the charges, or other motions, the complainant shall present and examine witnesses and offer other evidence substantiating the charges that have been made against the respondent. Thereafter the respondent may present and examine witnesses and offer other evidence refuting the charges. Complainant may then present evidence in rebuttal. All parties shall have the right to cross examine witnesses presented by the opposite party.

G. Rules of Evidence.

1. Irrelevant, immaterial, or unduly repetitious evidence shall be excluded. The rules of evidence, as applied in civil cases in Illinois, shall be followed; provided, however, that when necessary to ascertain facts not reasonably susceptible of proof under those rules, evidence not admissible thereunder may be admitted (except where precluded by statute) if it is of a type

commonly relied upon by reasonably prudent persons in the conduct of their affairs. The Commission shall give effect to the rules of privilege recognized by law. Objections to evidentiary offers may be made by either party and must be ruled on by the Commission. Such objections and rulings shall be noted in the record. Subject to these requirements, when a hearing is expedited and the interests of parties will not be prejudiced substantially, any part of the evidence may be received in written form.

2. Documentary evidence may be received in the form of copies or excerpts, if the original is not readily available.

3. The Commission may take notice of judicially cognizable facts.

H. Burden of Proof. Except as provided in Subsection 9.2B of these Rules and Regulations, the complainant shall have the burden of proving the charges brought by the clear and convincing evidence.

I. Argument. The Commission shall permit opening statements and closing arguments, first on behalf of complainant, next on behalf of respondent, and finally on behalf of complainant, within time limits to be established by the Commission in each case.

J. Record of Proceedings. The Commission shall make an audio recording of the hearing. That recording must be made available to any party for review or transcription at that party's expense. The Commission or any party may provide, in addition, for a transcript of the hearing to be taken by a reporter, in which event the Commission's audio recording will not be required. The transcript may be written at the request of the Commission or any party, at the expense of the requester.

Section 15.6 Findings and Decision.

A. Vote; Deliberations. To reach a finding of guilty on charges brought pursuant to Section 9.3 of these Rules and Regulations, at least two Commissioners must vote guilty. A vote of guilty as to a charge by less than two Commissioners constitutes a finding of not guilty. To reverse a suspension appealed to the Commission pursuant to Section 9.2 of these Rules and Regulations, at least two Commissioners must vote to reverse. The Commission may deliberate in public or in closed session, provided that final action shall be taken only in public session.

B. Finding of Not Guilty. If the respondent is found not guilty as to each and every charge, or if a suspension is reversed, then the Commission shall make a finding that the charges or suspension are not sustained and shall enter an order terminating immediately any suspension and requiring the Fire Department or Police Department to reimburse respondent for all wages not paid to the respondent during such suspension period.

C. Finding of Guilty. If the Commission finds that charges have been proved by clear and convincing evidence and that just cause exists and the Commission thus finds

the respondent guilty of any one or more charges, or if the Commission denies the appeal of a suspension, then the Commission shall adopt findings of fact in support of such determination. The Commission may order the discharge and removal of the respondent from office immediately; may order the suspension of the respondent from office, with or without pay, for a period of not more than 30 days, including any period of suspension, with or without pay, by the Fire Chief, Police Chief, or the Commission prior to such finding; may demote the respondent previously promoted from a lower rank with immediate reduction in compensation to a rate not exceeding the maximum rate of such lower rank; or any combination of the above. 65 ILCS 5/10-2.1-17.

D. Notice of Findings and Decisions. The Commission shall promptly serve notice on the parties of its findings and decision.

E. Rehearing. Such findings and decision of the Commission shall be final and not subject to rehearing.

Section 15.7 Administrative Review.

Either party may file a complaint for review of a final decision by the Commission in accordance with the provisions governing administrative review in Article III of the Illinois Code of Civil Procedure, 735 ILCS 5/3-101 *et seq*. Such complaint shall be filed within 35 days after the date of service of a copy of said decision on the parties affected thereby.

Section 15.8 No Applicability To Probationary Employees.

The provisions of this Chapter 15 do not apply to Department personnel who are on probation pursuant to Sections 5.4 or 11.4 of these Rules and Regulations.

ARTICLE V: DEFINITIONS AND GRAMMAR

CHAPTER 16. DEFINITIONS AND GRAMMAR

Section 16.1 General Definitions.

For the purposes of these Rules and Regulations, the following terms shall have the meanings herein ascribed to them:

A. Act. The Illinois Board of Fire and Police Commissioners Act, 65 ILCS 5/10-2.1-1 through 5/10-2.1-30, as amended from time to time.

B. Banding. The process by which written examination scores for entry-level positions are divided by the Commission or its designee into groups or clusters of applicants pursuant to Subsection 5.2D of these Rules and Regulations. Each of these groups is known as a "band."

C. Board of Trustees. The Board of Trustees of the Village of Northbrook, Illinois.

D. Charge. A written statement alleging just cause against the respondent for suspension, removal, discharge or demotion.

E. Clear and Convincing Evidence. That evidence which, when fairly considered, produces an abiding conviction that the truth of the factual contentions is highly probable.

F. Code. The Northbrook Municipal Code (1988), as amended.

G. Commission. The Board of Fire and Police Commissioners of the Village.

H. Complainant. The person who files a charge under this Chapter.

I. Day. One calendar day.

J. Departments. The Fire Department and the Police Department.

K. Filing. Presenting a document to the Commission by delivery to the Secretary personally, or by delivery to the Office of the Village Manager addressed to the attention of the Commission, or by mailing by regular mail to the office of the Commission. In the case of filing by mail, the date of filing shall be deemed to be the second day following the date of mailing, unless said second day be a Saturday, Sunday, or federal or state legal holiday, in which event the date of filing shall be the first regular business day following said Saturday, Sunday, or legal holiday.

L. Fire Chief. The Chief of the Fire Department.

M. Fire Department. The Fire Department of the Village.

N. Just Cause. Some substantial shortcoming on the part of a member of the Fire Department or Police Department that renders his or her continued employment in the Fire Department or Police Department in some way detrimental to the discipline and efficiency of the public service rendered by the Fire Department or Police Department and something that the law and sound public opinion recognize as cause for the member to no longer occupy his or her position. Without in any manner limiting the foregoing, "just cause" shall include but not be limited to the following:

1. the existence of, or discovery of, any fact that would have required disqualification from original appointment; or

2. non-disclosure of any fact that, if disclosed, would have constituted a ground for disqualification from original appointment; or

3. the making of a false statement, oral or written, of a material fact in connection with original appointment that could have substantially affected the decision to appoint the applicant; or

4. an act or occurrence, after appointment, that would have required disqualification from original appointment, or could have constituted ground for disqualification from original appointment; or

5. any violation of any federal, state, or municipal law affecting the member's ability or qualifications to continue in the performance of his or her duties; or

6. incompetence, nonfeasance, misfeasance, or malfeasance in office; or

7. failure to maintain required certifications or licenses for the position held; or

8. failure to qualify for the pension fund for the Department in which he holds a position; or

9. violation of a rule or regulation of the Fire Department or Police Department.

O. Managerial Positions. All persons appointed by the Fire Chief above the rank of Lieutenant pursuant to Section 12-31(b) of the Code and all persons appointed by the Police Chief above the rank of Sergeant pursuant to Section 20-21(c) of the Code.

P. Member. Any person holding a permanent, sworn position in the Fire Department or the Police Department, except the Fire Chief and the Police Chief and the Managerial Positions.

Q. Officer. Any person holding a permanent office in the Police Department or Fire Department except as otherwise specifically set forth herein.

R. Open Meetings Act. The Illinois Open Meetings Act, 5 ILCS 120/1 *et seq.*

S. Parties. The complainant and the respondent.

T. Police Chief. The Chief of the Police Department.

U. Police Department. The Police Department of the Village.

V. Respondent. A member of the Fire Department or Police Department against whom a charge is filed.

W. Rules and Regulations. These Rules and Regulations of the Commission.

X. Secretary. The Secretary of the Commission or a person designated by the Secretary to perform some or all of the administrative and clerical duties of the Secretary.

Y. Service. The presentation by a party to the other party, or by the Commission to a party, of any document by personal delivery to the other party or by mailing by United States mail in an envelope properly addressed, with postage prepaid, to the last known address of such other party, together with a written certificate of service. In the case of service by mail, the date of service shall be deemed to be the second day following the date of mailing, unless said second day be a Saturday, Sunday, or federal or state legal holiday, in which event the date of service shall be the first regular business day following said Saturday, Sunday, or legal holiday.

Z. Village. The Village of Northbrook, Illinois.

AA. Village Board. The Board of Trustees of the Village of Northbrook, Illinois.

BB. Village Manager. The Village Manager of the Village.

CC. Village President. The Village President of the Village.

Section 16.2 Grammar Rules.

Throughout these Rules and Regulations, all nouns and pronouns shall include ~~all~~ genders and all forms of words shall include both singular and plural meanings.

VILLAGE OF NORTHBROOK
BOARD OF FIRE AND POLICE COMMISSIONERS

RULES AND REGULATIONS

Adopted by the Board of Trustees
of the Village of Northbrook

~~March~~ July ~~5~~6

TABLE OF CONTENTS

ARTICLE I: ADMINISTRATION

Chapter 1. Authority; Board of Commissioners

Chapter 2. Calls for Examinations

ARTICLE II: POLICE DEPARTMENT HIRING

Chapter 3. Police Department Registers of Eligibles

Chapter 4. Applications for Rank of Police Officer

Chapter 5. Examinations and Appointments for Rank of Police Officer

Chapter 5a Police Officer Lateral Entries

Chapter 6. Applications for Police Department Promotional Positions

Chapter 7. Police Department Promotional Examinations and Appointments

Chapter 8. Police Department Temporary Appointments and Voluntary Demotions

ARTICLE III: FIRE DEPARTMENT HIRING

Chapter 9. Fire Department Registers of Eligibles

Chapter 10. Applications for Position of Firefighter/Paramedic

Chapter 11. Examinations and Appointments for Position of Firefighter/Paramedic

Chapter 12. Applications for Fire Department Promotional Positions

Chapter 13. Fire Department Promotional Examinations and Appointments

Chapter 14. Fire Department Temporary Appointments and Voluntary Demotions

ARTICLE IV: DISCIPLINE

Chapter 15. Suspensions, Removals, Demotions, and Discharges

ARTICLE V: DEFINITIONS; GRAMMAR

Chapter 16. Definitions and Grammar

DRAFT

ARTICLE I: ADMINISTRATION

CHAPTER 1. AUTHORITY; BOARD OF COMMISSIONERS

Section 1.1 Source of Authority.

The Board of Fire and Police Commissioners of the Village of Northbrook (the "*Commission*") derives its power and authority from the Illinois Board of Fire and Police Commissioners Act, 65 ILCS 5/10-2.1-1 *et seq.* and as authorized by the Village's Board of Trustees through an exercise of its home-rule authority.

Section 1.2 Applicability of Rules and Regulations; Definitions.

A. Applicability of Rules and Regulations. These Rules and Regulations apply to the governance, control, and administration of the Commission and to original appointments, promotions, and hearings related to members of the Fire Department and Police Department of the Village of Northbrook.

B. No Applicability to Governance of Departments. These Rules and Regulations do not govern the operations of the Fire Department or the Police Department.

C. Definitions and Grammar Rules. The definitions and grammar rules applicable to these Rules and Regulations are included in Chapter 10.

Section 1.3 The Commission.

A. Composition; Appointments; Commissioners. The Commission shall consist of three Commissioners.— The Chairperson of the Commission shall be a Commissioner and shall be appointed by the Village President with confirmation by a majority of the Board of Trustees. The Chairperson shall be the presiding Commissioner at all meetings of the Commission except that, in his or her absence, a temporary presiding Commissioner shall be elected by the remaining two Commissioners. The Village Human Resources Director shall be the Secretary of the Commission unless another Village staff member is designated in the Director's absence by the Village Manager. Responsibilities of the Secretary shall be to keep the minutes of all Commission meetings in a permanent record book; to be the custodian of all the forms, papers, books, records, and completed examinations of the Commission; to keep a record of all examinations conducted by the Commission; and to perform all other duties prescribed by the Commission.

B. Duties. The Commission shall appoint all members of the Departments in accordance with, and to the extent provided in, these Rules and Regulations. The Commission also shall promote and discipline all members of the Departments, as provided by the Act. The Fire Chief and Police Chief shall be appointed by the Village Manager. The Managerial Positions shall be appointed by the Fire Chief or Police Chief subject to the prior advice and consent of the Village Manager.

Section 1.4 Commission Meetings.

A. Regular, Special, and Emergency Meetings. The regular annual meeting of the Commission shall be held on the first Thursday in May of each year. The office of the Commission is designated as 1225 Cedar Lane, Northbrook, Illinois 60062-5199, and the annual meeting shall be held at that office unless otherwise provided. The Chairperson or any two Commissioners may call a special meeting or an emergency meeting of the Commission. All meetings of the Commission, including a special meeting, shall be posted on the Village website and noticed at least 48 hours in advance or as otherwise provided by the Illinois Open Meetings Act.

B. Closed Sessions. During any regular or special meeting, a closed session may be held upon a proper motion made by any Commissioner and passed by a roll call vote for the purpose of discussing matters related to appointment, employment, discipline, performance, or dismissal of specific personnel pursuant to 5 ILCS 120/2 (c) (1) of the Open Meetings Act. Closed sessions will be limited to the Commissioners, Secretary, Village Attorney, and other persons deemed necessary by the Commission, if any. The Secretary will record the motion to close the meeting, record the vote of the Commissioners on that motion and keep minutes of the closed session. An audio or video record of each closed session will be maintained by the Secretary and disposed of in accordance with the provisions of the Open Meetings Act.

C. Public Notice of Meetings. Public notice of any regularly scheduled or special meeting shall be posted on the Village website and held in accordance with the Open Meetings Act.

D. Attendance by Electronic Means. If a member is unable to be present physically at a meeting of the Commission for health related reasons, or the need to conduct personal business or the business of the Commission, or due to a personal or family emergency, then that Commissioner may attend and participate at the meeting by telephone or other electronic means, subject to the following conditions: (1) that Commissioner must give notice of his or her intent to attend and participate at the Commission meeting by electronic means to the Commission's recording secretary or the Village Clerk at least four hours prior to the scheduled meeting, which notice must state the reason why that Commissioner is attending by electronic means and (2) the other two Commissioners must be physically present at the meeting and must vote to approve the attendance of the third Commissioner by electronic means. The minutes of the meeting must state which Commissioner attended by electronic means and the reason for attendance in that manner.

E. Quorum. Two Commissioners, being a majority of the Commissioners, shall constitute a quorum of the Commission for the conduct of all Commission business.

F. Agenda. The agenda for each meeting shall include the following elements:- Call to Order and Roll Call, Approval of Minutes, Public Comment, Communications, Discussion Topics, and, if necessary, Closed Session.

G. Procedures. When these Rules and Regulations do not establish a specific procedure for conducting the business of the Commission, then parliamentary procedures prescribed in Roberts Rules of Order shall be followed, as far as applicable and practical. Motions may be made and seconded orally by any member of the Commission and shall be recorded in the minutes together with the action taken thereon.

Section 1.5 Annual Report and Budget.

If requested by the Village Manager, the Commission shall submit, before the last day of April in each year, an annual report of its activities and of the rules in effect and the practical effect thereof to the Village Manager for transmission to the Village President and Village Board. Also if requested by the Village Manager, the Commission shall submit to the Village Manager for transmission to the Village President and Village Board a budget request for the following Village fiscal year. The budget request shall be limited to those amounts necessary for the conduct of the Commission's operations.

Section 1.6 Amendments of Rules and Regulations.

The Commission, with the approval of the Village Board, may amend these Rules and Regulations from time to time. The Commission shall submit each proposed amendment to the Village Board for its approval prior to the amendment being printed for distribution. After Board approval, each amendment will be posted on the Village website and the Secretary shall give notice of (a) the place where the Rules and Regulations, as amended, may be obtained and (b) the date, not less than 10 days subsequent to the time of publication, when the Rules and Regulations as amended shall take effect. Such notice shall be published in a newspaper published in the Village or, if no newspaper is published in the Village, then in a newspaper with a general circulation within the Village.

Section 1.7 Governing Law; Conflicts; Severability.

A. These Rules and Regulations Apply. In the case of any conflict between any provision of these Rules and Regulations and any provision of any federal, State of Illinois, or Village constitution, statute, ordinance, or regulation (the "*Other Law*"), the provision of these Rules and Regulations shall apply and govern unless such provision is legally preempted by the Other Law.

B. No Applicability to Managerial Positions. These Rules and Regulations do not apply to ~~Managerial Positions~~positions above the Sergeants and Captains~~Lieutenants~~.

C. Conflict Limited. If any provision of these Rules and Regulations is rendered invalid pursuant to Subsection A of this Section, then that fact shall not affect any other provision of these Rules and Regulations.

D. ~~Facial Invalidity. If any court of competent jurisdiction shall adjudge any provision of these Rules and Regulations to be invalid, then that judgment shall not affect any other provision of these Rules and Regulations.~~

~~E. Invalidity as Applied. If any court of competent jurisdiction shall adjudge invalid the application of any provision of these Rules and Regulations to a particular case, then that judgment shall not affect the application of any other provision or of that provision to any other particular case having different facts or circumstances.~~ Severability. If any provision of these Rules and Regulations, or the application of any provision to any person, case, or circumstance, is held invalid by a court of competent jurisdiction, that invalidity shall not affect any other provision of these Rules and Regulations or the application of that provision to other persons, cases, or circumstances that can be given effect without the invalid provision or application, and to this end the provisions of these Rules and Regulations are severable.

CHAPTER 2. CALLS FOR EXAMINATIONS

Section 2.1 Examination Calls.

The Secretary, upon advice of the Department(s), shall advise the Commission Chair that a Call for Examination is required along with a status of existing Registers of Eligibles, as applicable, demonstrating the need for an examination and the following information: the time and place where the examination will be held; the location where applications may be obtained and the date by which applications must be returned to the Commission; the rank to be filled from the resulting Register of Eligibles; any special eligibility standards established pursuant to Subsections 4.1E and 10.1E of these Rules and Regulations; and notice that applications for that examination will be received for a period of time established by the Secretary but not less than two weeks.

The Commission Chair shall within five business days advise the Secretary to call a meeting of the Commission to review, discuss and/or amend the Call for Examination if such a meeting of the Commission is deemed necessary by the Chair. If the Commission Chair does not call for a meeting of the Commission, the Secretary will proceed with notice to the full Commission and Department(s) of the Call for Examination and related information and proceed in accordance with the details provided to the Chair.

The Village will accept applications for entry level and lateral police officer appointment as well as firefighter paramedic appointment and conduct testing throughout the year to establish one register of eligibles per position that does not expire. ~~For the Police Department, the Commission will accept applications for original and lateral appointment and conduct testing throughout the year to establish one Register of Eligibles that does not expire. Also, for the Fire Department, the Commission will accept applications for firefighter paramedic appointment and conduct testing throughout the year to establish one Register of Eligibles that does not expire.~~ The Commission may also utilize a testing vendor for purposes of selecting candidates for further application and review. This may

Formatted: Not Highlight

Formatted: Indent: First line: 0.5"

be reviewed on an annual basis and individuals may be removed if they have been on the Register of Eligibles for over one year.

-

Formatted: Not Highlight

Formatted: Normal (Web), Left, Don't suppress line numbers, Hyphenate

Section 2.2 Notice of Examination.

An examination will be held at a time and place fixed by the Secretary with consent of the Chair or by the testing vendor selected by the ~~Commission~~Secretary. Notice of the examination must be given by publication at least two weeks preceding the examination either on the Village's Internet website or in one or more newspapers published in the Village in accordance with the statutes of the State of Illinois, or both, except that notice of an examination for a promotional rank may be waived in writing by all members of the Department eligible for that examination. The notice of examination must state the period during which applications for that examination will be accepted. The examination may be postponed by order of the Commission, which order shall state the reason for the postponement and shall designate a new date for the examination. Applicants will be notified of the postponement of the examination and of the new date fixed for said examination.

If the Commission participates in a ~~e~~Continuous E~~e~~xamination ~~p~~Process, notice of the Village's participation in that process shall be posted on the Village's website which identifies the testing vendor and information necessary for the applicant to contact the vendor and participate in the testing process, e.g. telephone number, email and/or website.

Formatted: Indent: First line: 0.5"

Section 2.3 Type of Examinations.

The elements of an examination must be practical in character and fairly test the capacity of applicants to discharge the duties of the position to which the applicants seek appointment. No examination may contain questions regarding political or religious opinions or affiliations, and no consideration may be given to such matters under any circumstances.

ARTICLE II: POLICE DEPARTMENT HIRING

CHAPTER 3. POLICE DEPARTMENT REGISTERS OF ELIGIBLES

Section 3.1 Establishment of Police Department Registers of Eligibles; Tied Scores.

The Commission shall ~~establish and maintain~~ utilize a Register of Eligibles for ~~each rank~~ ~~original~~entry-level appointment within the Police Department~~, except for the position of Police Chief and the Managerial Positions~~ as a patrol officer. A Register of Eligibles shall rank all applicants who have passed all elements of a written examination ~~for the stated rank~~ in order of their relative excellence as determined by the examination and preferences, but without reference to priority of time of examination and preliminary background investigation. In the event of tied scores, the ~~tie will be broken by lot in the presence of at least two Commissioners, at a regular or special meeting of the Commission, in a manner the Commission determines is appropriate under the circumstances~~month of the ~~.~~applicant's date of birth will determine priority on the list. The Commission may establish a continuous application process or a one time testing and eligibility list at its discretion.

Section 3.2 Initial Police Department Eligibility Lists.

A. Police Officer Rank.

~~1. Within 60 days after all applicants for the rank of police officer who are placed in a single band on the achieve a passing score on the written test, physical ability test (POWER Test) and preliminary background investigation have completed the first five elements of the entry-level examination (*see* Section 5.1), the Secretary or the Secretary's designee shall prepare and post an Initial Eligibility List of the applicants who passed all of those elements, ranking those applicants in order of their relative excellence.~~

2. The Secretary of the Commission or their designee at the recommendation of the Chief, at ~~its~~ their discretion, may authorize appointments from ~~both~~ the Initial Eligibility List ~~and the Police Officer Lateral Entry List~~. Calls for Police Officer Lateral Entry applications will be ~~made at the direction of the Commission, and will be administered as authorized~~ requested by the Secretary of the Commission and/or the Police Chief, or his/her designee and the Supervisory Positions in accordance with these Rules, including without limitation Chapter 5a of these Rules. ~~Police Officer Lateral Entry applicants may be subject to additional requirements as required by the Commission and will be required to pass, at minimum Elements 4, 6, 7, 8, and 9 of Section 5.1 of these Rules and Regulations. All Police Officer Lateral applicants will be subject to standards and requirements in Chapter 5a. The Secretary will establish a Police Officer~~

~~Lateral Entry Register of Eligibles from qualifying Lateral Entry applicants.~~

3. The Chief of Police and the Secretary of the Commission, at their discretion, may fill a vacancy in the rank of Police Officer by appointing an applicant from the Register of Eligibles who has been awarded a certificate attesting to the applicant's successful completion of the Illinois Law Enforcement Training and Standards Board basic Full-time Police officer training program (or out of state equivalent) and employees who serve as a CSO for the Village, ahead of applicants who have not achieved that certification and license. Those selected with a valid full-time certification will be considered as "lateral" candidates.

B. Promotional Positions. Within 60 days after all applicants for a promotional rank have completed all applicable elements of an examination (*see* Section 7.1), the Secretary shall prepare and post an Initial Eligibility List of the applicants who passed all of those elements, ranking those applicants in order of their relative excellence.

Section 3.3 Police Department Preference Points.

A. Entry-Level Preference Points.

1. Maximum Possible Police Department Entry-Level Points. An applicant for the rank of police officer may receive a maximum of 5 preference points ~~if that applicant qualifies for those points under this Section 3.3. Not more than a total of 5 preference points may be awarded to any applicant~~. Points may be given only if a proper and valid claim for a preference has been made and only if the standards of the Act and these Rules and Regulations have been met.

2. Available Police Department Entry-Level Points. Preference points for the rank of police officer may be awarded ~~for educational status, law enforcement training and employment, or military service~~ as follows:

- Education Points. The applicant may be awarded educational preference points~~.~~ as outlined below for the highest level of education achieved. ~~5 points if the applicant has successfully obtained an associate's degree in the field of law enforcement or criminal justice, or a bachelor's degree, from a nationally accredited college or university.~~
- For total course credit hours of 60 to 89 credit hours: 2.1 points.
- For total course credit hours of 90 or more: 2.8 points.
- For a bachelor's degree: 3.5 points
- For a Master's degree: ~~5~~3 points

i.

ii. Law Enforcement Training and Employment Points. The applicant may be awarded 5 points if the applicant has been awarded a certificate attesting to the successful completion of the Minimum Standards Basic Law Enforcement Training Course as provided in the Illinois Police Training Act and is currently serving as a law enforcement officer on a part-time or full-time basis within the State of Illinois.

iii. Military Service Points. An applicant ~~shall~~ may be awarded 5 points if (a) the applicant was engaged in the active military or naval service of the United States for a total cumulative period of at least one year and was honorably discharged or (b) the applicant is currently or has been on inactive or reserve duty in such military or naval service for a total cumulative period of at least one year, except as provided in ~~Section~~ 65 ILCS 5/10-2.1-8 of the Act.

iv. Qualified Position Service Points. An applicant may be awarded points for civilian service as an active Village employee in the capacity as Community Service Officer, dispatcher, records clerk, or similar position related to the Police Department operations or the work performed by a police officer. ~~(a "*qualified position*")~~. A maximum of 5 ~~2.5~~ points may be awarded as follows: 1/4~~10~~ of a point at the date of hiring plus 1/4~~10~~ of a point for each month of continuous employment in a qualified position.

~~iv.~~

Formatted: Indent: Left: 1.5", No bullets or numbering

3. Time and Method of Claiming Police Department Entry-Level Preference Points. ~~Except as stated in the last sentence of this Subsection 3.3.A.3, within 10 days after the posting of an Initial Eligibility List, each applicant on that list who may claim preference points for educational status, law enforcement training and employment, or military service shall submit his or her claim for that preference in writing to the Commission or an agency or consultant designated by the Commission. Claims not made within that 10 day period will be deemed waived. The applicant, at the time of submitting a claim for a preference, must submit evidence of qualification for that preference. Preference points for civilian service in a qualified position under Subsection 3.3A.2.iv will be awarded at the time of administration of Element 3 – Written Test of the Examination Elements under Subsection 5.1.A of these Rules and Regulations~~.

~~Within 10 days after the posting of an Initial Eligibility List,~~Upon application for the written exam, each applicant on that list who may claim preference points for educational status or military service shall submit his or her claim for that preference in writing with support with the application~~to the Commission~~ or an agency or consultant designated by the Secretary of the Commission. ~~Claims not made within that 10-day period~~

~~will be deemed waived. The applicant, at the time of submitting a claim for a preference, must submit evidence of qualification for that preference. Applicants included in the Register of Eligibles shall abe given notice of their inclusion and 10 days in which to make a claim for preference points and provide substantiation of the claim.~~

B. Police Department Promotional Preference Points.

1. Maximum Possible Police Department Promotional Points. An applicant for a promotional rank within the Police Department may receive preference points if that applicant qualifies for those points under this Subsection 3.3.B. Not more than a total of 3.5 preference points may be awarded to any applicant.

2. Military Service Points. Upon receipt of a valid claim for a military service preference from an applicant for a promotional position in the Police Department, the Secretary shall add 7/10 of one point to the applicant's total examination score for each six months or fraction thereof of active military service, not exceeding 30 months.

3. Advanced Education Points. Upon receipt of a valid claim for an advanced education preference from an applicant for a promotional position in the Police Department, the Secretary shall add points to the applicant's total examination score as follows:

- For total course credit hours of 60 to 89 credit hours: 2.1 points.
- For total course credit hours of 90 or more: 2.8 points.
- For a bachelor's degree: 3.5 points

All course credit hours must have been earned from a nationally accredited college or university and must be supported by official transcripts

5. Time and One Time Only Preference Points. ~~Except as stated in the last sentence of this Subsection 3.3.B.5, within 10 days after the posting of an Initial Eligibility List, each applicant on that list who may claim preference points for educational status or military service shall submit his or her claim for that preference in writing to the Commission or an agency or consultant designated by the Commission. Claims not made within that 10-day period will be deemed waived. The applicant, at the time of submitting a claim for a preference, must submit evidence of qualification for that preference. Preference points for civilian service in a qualified position under Subsection 3.3.A.2.iv will be awarded at the time of administration of Element 3 – Written Test of the Examination Elements under Subsection 7.1.A of these Rules and Regulations.~~ A preference for a promotional appointment may be made only if the applicant has not previously been promoted in the Police Department. ~~No applicant may receive a preference for a promotional appointment after that person has~~

Formatted: Indent: Left: 1"

Formatted: Underline

~~received one promotion, during his or her employment by the Police Department, from a Register of Eligibles on which the applicant was allowed a preference.~~

Section 3.4 Final Police Department Register of Eligibles.

After the process of adding preference points has been completed, the Secretary shall re-rank the applicants on the Initial Eligibility List according to their scores including preference points. Each applicant's order of eligibility as thereupon determined will be the basis for placement of the applicant~~'~~s on the Register of Eligibles.

Section 3.5 Additions to Police Department Registers of Eligibles.

After determining the final order of eligibility for an Eligibility List, the Secretary shall immediately integrate that Eligibility List into the existing Register of Eligibles, if one exists~~, which integration must be made in such a manner that all applicants are ranked on that Register of Eligibles in the order of their relative excellence as determined by examination and allowable preference points, but without reference to priority of time of examination or completion of any Initial Eligibility List. An applicant who was already on the existing Register of Eligibles and who took the current examination for the new Eligibility List will be ranked on the Register of Eligibles based on his or her performance on the current examination and not on his or her prior listing on the Register of Eligibles. The re-ranking of an applicant on a Register of Eligibles whose name already was included on that Register of Eligibles will not extend the time period for eligibility of that applicant to remain on that Register of Eligibles.~~ . After the transfer of the names of all applicants on an Initial Eligibility List to the Register of Eligibles, the Initial Eligibility List must be abolished and will be of no further force or effect.

Section 3.6 Removal of Names from Police Department Registers of Eligibles.

A. Entry-Level Registers. The Secretary shall strike from the Register of Eligibles for the rank of police officer the name of:

1. any applicant who may be disqualified pursuant to any provision of these Rules and Regulations; and

2. ~~any~~ any applicant who ~~any applicant who has been on that Register of Eligibles for more than two years after the initial posting of that Register, regardless of when all examination elements have been administered and regardless of whether that Register of Eligibles has been integrated with new applicants, except that the Commission in its discretion may extend the two year period of the entire Register of Eligibles up to a total of six additional months, if necessary; and~~did not pass the Preliminary Character and Background Check;

3. any applicant who ceases to meet the qualifications for the rank of police officer;

4. any applicant who does not meet the qualifications for an officer under the Illinois Law Enforcement Officer's Training and Standards Board requirements; and

~~4~~5. any applicant who does not, or cannot, accept the position within ~~seven~~ three ~~businesses~~business days after receiving notice of his or her appointment, except as otherwise provided in Subsection 5.3.B of these Rules and Regulations.

B. Promotional Registers. The Secretary shall strike from the Register of Eligibles for a promotional rank the name of:

1. any applicant who may be disqualified pursuant to any provision of these Rules and Regulations; and

2. any applicant who has been on that Register of Eligibles for more than three years; and

3. any applicant who ceases to meet the qualifications for the rank to be filled from that Register of Eligibles; and

4. any applicant who does not, or cannot, accept the position within seven days after receiving notice of his or her appointment, except as otherwise provided in Subsection 7.3.B of these Rules and Regulations.

CHAPTER 4. APPLICATIONS FOR RANK OF POLICE OFFICER

Section 4.1 Minimum Requirements and Standards~~-~~ for Entry-Level and Lateral Police Officer Applicants.

A. Citizenship. At the time of filing an application, an applicant for a position in the Police Department must be a citizen of the United States.

B. Age. Each applicant must provide proof of his or her birth date at time of filing an application.

1. Minimum Age for All Police Department Positions. At the time of filing an application for any position in the Police Department, an individual must have passed his or her 21st birthday.

2. Maximum Age for Entry-Level Police Officer Position. At the time of filing an application for the rank of police officer, the applicant must be less than 35 years of age, unless the applicant is exempt from that age limitation under ~~Section~~ 65 ILCS 5/10-2.1-6 of the Act. A veteran shall be allowed to exceed the maximum age provision of this Section by the number of years served on active military duty, but by no more than 10 years of active military duty. The maximum age for a lateral candidate will be 49.

C. Fingerprinting. Each applicant must be fingerprinted after successfully completing the written and physical ability elements of the entry-level examination as part of the ~~part of~~ Preliminary Character and Background Check

D. Police Department Minimum Education Standards. No person shall be eligible to apply for the rank of police officer unless that person has successfully completed two years of studies—equaling an associate's degree, or 60 hours of course work, or equivalent credits—at a junior college, college, or university accredited by a nationally recognized accreditation agency. The Commission may waive this requirement if (1) the applicant has served 24 months of honorable active duty in the United States Armed Forces and has not been discharged dishonorably or under circumstances other than honorable or (2) the applicant has served 180 days of active duty in the United States Armed Forces in combat duty recognized by the Department of Defense and has not been discharged dishonorably or under circumstances other than honorable.

E. Police Department Special Standards. The Commission may set, at the time that it calls an examination, particular standards for eligibility for the rank of police officer if the Commission determines that the position requires special qualifications. The Commission also may require evidence from each applicant establishing that the applicant meets those particular standards. ~~The Commission may also fill vacant positions with qualified applicants from the lateral Register of Eligibles.~~

Section 4.2 Police Department Application Form, Basic Standards.

A. Application Form; Completion. The Commission, ~~or~~ its designated representative, or vendor shall furnish the application form, which form must be completed in its entirety by any applicant, including all supplementary information and documentation.

B. Supplementary Information. At the time of filing an application, the applicant must furnish the following:

1. a certified copy of his or her birth certificate;

2. a copy of his or her high school diploma or its equivalent;

~~3. a copy of his or her transcripts of post-high school study, if applicable;~~

~~4.~~3. a copy of his or her military service record, discharge papers, and U.S. Government Form DD214, if applicable;

~~5.~~4. a copy of his or her Social Security Card and/or proof of work authorization;

~~6.~~5. a copy of each other certificate or license required by these Rules and Regulations; and

~~7.~~6. a copy of his or her college or university degree and, if requested, a copy of a certified transcript of his or her course work from an accredited college ~~or~~ university or post-high school studies.

C. General Character, Health. An applicant must be of good moral character, of temperate habits, and must be physically able and in a sufficient state of health to perform the essential functions and/or duties of the position for which he or she is applying. The burden of establishing compliance with these standards rests on the applicant.

D. Exclusion for False Statements. A false statement knowingly made by a person in an application, or connivance in any false statement made in any supplementary information that may accompany the application, or complicity in any false statement or fraud related to an application or supplementary information shall be ~~regarded as~~ good cause for exclusion from the examination.

Section 4.3 Filing of Police Department Application.

The application for the position of police officer must be filed~~, prior to taking an examination,~~ with the Secretary of the Commission or with an agency or representative designated by the Commission. No position will be filled unless the Village publishes notice of vacancies and acceptance of applications ~~No application will be accepted until notice of an examination for a position has been given in accordance with Section 2.2 of these Rules and Regulations, and applications will be accepted only during the period designated by the Commission pursuant to Section 2.2. The recipient of the application on behalf of the Commission shall note on the application the date it was received.~~ Each applicant shall be responsible for advising the Commission of any changes in his or her physical address, email address or telephone number.

Section 4.4 Disqualification.

A. Grounds. The Commission may refuse to examine, or after examination refuse to certify as eligible, or after certification as eligible refuse to retain on the Register of Eligibles, any applicant:

1. who is found lacking in any of the established general requirements, or in any special standards established pursuant to Subsection 4.1.E of these Rules and Regulations, for an entry-level position stated in these Rules and Regulations or in the Act; or

2. who is a user of narcotics or other non-prescription drugs, or a habitual user of intoxicating beverages; is a gambler; or is not a person of good character; or

3. who has been convicted of a felony, a crime of moral turpitude, or a misdemeanor specifically listed in 65 ILCS 5/10-2.1-6 as amended from time to time 50 ILCS 705/1 et seq., or as required by law; or

4. who, in the judgment of the Commission, has practiced or attempted to practice any dishonesty, deception, or fraud in his or her application, examination, or other submissions to or dealings with the Commission, the Police Department, or the Village; or

5. who has failed to abide by the rules and procedures governing any aspect of the application process; or

6. who is physically or mentally unable to perform the essential functions/duties of the position to which he or she seeks appointment; or

7. who has been dismissed from any public service for good cause; or

8. whose character or employment references are unsatisfactory; or

9. who has applied for a position in the Police Department and is, or has been, classified as a conscientious objector; or

10. who has failed to appear for, or failed, any element of the examination or otherwise has not successfully completed any portion of the ~~examination process~~hiring process; or

11. who does not have a valid automobile driver's license~~.~~; or

12. who knowingly divulges or receives test questions or answers before a written examination; or

13. who has previously tested with the Village for a position in the Fire Department or Police Department and failed the polygraph, psychological or background check; or

14. w~~W~~ho does not respond ~~-~~to communication from the Village or Commission ~~Board~~ for a period of time exceeding ~~ten~~three (3~~10~~) business days, or

15. who is unable to work a rotating shift~~.~~

B. Notification. Any applicant who has been disqualified will receive notice from the Secretary of the Commission of the disqualification.

Section 4.5 Release of Liability.

In consideration of being admitted to the examination process, all applicants must execute and deliver to the Village or ~~Commission or~~ its designated representative a release of all liability as a result of participating in the examinations, and all waivers and releases of information necessary to allow the ~~Commission~~ Village or its designated

~~respresentative~~representative to complete all elements of the examination, on forms approved by the ~~Commission~~Village~~2~~, or its designee. ~~or designated testing vendor~~.

Section 4.6 Admission to Examination.

No person shall knowingly be admitted to any element of any examination who does not meet the minimum qualifications established for the rank of police officer. The fact that a person is admitted to an element of an examination will not be considered as evidence that he or she is qualified or eligible for the position.

Section 4.7 No Creation of Applicant Right or Interest.

Neither the filing of an application, nor the acceptance of an application, nor an applicant's satisfaction of the general or special qualifications for filing an application or being admitted to an examination, nor any provision of these Rules and Regulations may be construed or applied as creating any vested, property, or other right or interest in any person to apply for, be examined for, or be appointed to any position in the Departments.

Section 4.8 Correction of Application.

An incomplete or defective application will be returned to the applicant for correction, if the applicant otherwise is qualified for the position he or she seeks. A returned application must be resubmitted within the time period established by the Commission or its designated representative.

CHAPTER 5. EXAMINATIONS AND APPOINTMENTS FOR RANK OF POLICE OFFICER

Section 5.1 Police Officer Examination Elements; Grading.

A. Examination Elements. All applicants must submit themselves for each element of an examination for the rank of police officer at the times and places established by the Commission. An examination will consist of the following elements and will require the indicated minimum passing grade:

Examination Element	Minimum Passing Grade	% of Total Grade
~~Element 1. Orientation.~~	~~Attendance Mandatory~~	
Element 1~~2~~. ~~P~~Completion of P~~ower~~OWER Test ~~Card~~ within 6 months of application ~~hysical Ability Test~~:	_____Pass	
Element 2~~3~~. Written Test:	70 percent	50%
Element 3~~4~~. Preliminary Character & ~~and~~ Background Check:	_____Pass	

Element ~~5~~4.	Oral ~~Test~~Interview:	70 percent	50%
Element ~~6~~5.	Polygraph Test & Background Check:	Pass	
~~Element 76. Detailed Character and Background Check:~~		~~Pass~~	
Element ~~7~~6~~8~~.	Psychological & Medical Tests:	Pass	
~~Element 98. Medical Test:~~		~~Pass~~	

The Commission may rearrange the order for administering Examination Elements 1~~2~~, 2~~3~~, and 4~~3~~. The failure to achieve the minimum passing grade in any examination element disqualifies the applicant from any further participation.

B. Grading Generally. Each applicant's score will be the average of his or her scores on the written test and the oral examination. No information concerning grades and no test scores will be disclosed or provided to any applicant until after the posting of an Initial Eligibility List or at another time designated specifically by the Commission. The names of persons failing the examination need not be posted, published, or disclosed by the Commission except to that person. Each applicant will be notified within a reasonable time of the result of his or her examination. All examination files and materials, if they are retained, will be maintained as files of the Commission and not of the Police Department but will be subject to disclosure as required by law. Those files will be physically maintained in the location designated by the Village Manager.

Section 5.2 Police Officer Examination Descriptions and Procedures; Deferral.

A. Element One—~~Orientation. All applicants must attend an orientation scheduled by the Police Chief and conducted by persons designated by the Commission. The failure to attend the orientation will constitute failure of this examination element.~~

~~B. Element Two—~~Physical Ability Test. All applicants ~~who attended the orientation~~ may be required to take a physical ability test to be conducted and graded by persons determined by the Commission. If a physical ability test is given, then only applicants who have participated and passed that test will be allowed to continue in the examination process. Applicants who fail to achieve a passing grade on the physical ability test will be notified. The Commission will also accept proof of passing the POWER test within 6 months ~~6~~ to satisfy Element One.

C. Element ~~Three~~Two—Written Test. All applicants who have successfully passed all prior elements of the examination must submit themselves for a written test.

Formatted: Indent: First line: 0.5"

Formatted: Not Highlight

1. Procedure. The written test will be conducted and graded by two or more Commissioners or by a testing agency or service designated by the Commission.~~, in a room or rooms designated by the Commission for that purpose, which rooms may be at a testing agency's facility. The test scores will be banded by the Commission or its designee.~~

2. Finality. All test papers are the property of the Commission and any entity assisting the Commission with the test, and the grading thereof by the Commission will be final and conclusive and not subject to review by any other board or tribunal of any kind or description.

~~D. Banding. The Commission shall determine to the best of its ability, after completion of the written test, the number of applicants who are likely to be hired from the Register of Eligibles being created, based on historical averages and anticipated hiring needs during the term of the Register of Eligibles (the "*Anticipated Hire Number*"). From that determination, the Commission shall divide the applicants into bands, the first of which bands must include three times the Anticipated Hire Number, but not fewer than the lesser of 20 applicants or the total number of eligible applicants. Subsequent bands may be designated by the Commission from time to time, each of which subsequent bands must include a number of applicants at least equal to one-half of the number of applicants that were included in the first band, or all remaining eligible applicants, whichever is less.~~

D.

~~E.~~ Element Three~~Four~~—Preliminary Character and Background Check. At the request of the Secretary of the Commission or their designee, the Police Department shall conduct a preliminary character and background investigation of each applicant who has successfully passed all prior elements of the examination. The investigation must review available data and information related to the applicant's compliance with the general qualifications and criteria for the rank of police officer set out in these Rules and Regulations and such other data and information as are pertinent to a proper review and analyses of the applicant.

~~F~~E. Element Four~~Three Five~~—Oral Interview~~Test~~. At the request of the ~~Commission~~Secretary of the Commission or their designee, ~~all~~ selected applicants ~~who have successfully passed all prior elements of the examination~~ shall submit themselves for an oral interview.~~test. Applicants who fail to successfully complete the oral test will be notified and eliminated from all further consideration.~~

1. Procedure. The oral interview~~test~~ of each applicant will be conducted by individuals from the Human Resources ~~Department~~Division of the Village Manager's Office, Police Department (as assigned by the Chief) and ~~two or more~~ at least one ~~or two~~ Commissioner~~s. and, if desired by the Commission, a test facilitator~~. The ~~test~~ interview will be administered to those applicants ~~included within the highest band and, if determined by the~~

Formatted: Indent: Left: 0.5"

Formatted: Indent: Left: 0", First line: 0"

~~Commission to be necessary, the next succeeding band or bands.~~ identified by the ~~Commission~~Secretary or their designee in the order of their standing after the written test. ~~Each applicant included the highest band will be given an opportunity to take the oral test before the Commission administers the oral test to any applicant in a lower band.~~ At the end of the interview ~~test~~ of each applicant, ~~the examiners~~ the interviewers may discuss the merits of that applicant. Each examiner must individually ~~grade~~ evaluate the applicant. The applicant's ~~final grade~~evaluation~~, which will be computed only after the test has been administered to all applicants,~~ will be the average of all of the ~~examiners'~~ interviewers' ~~grades~~evaluations.

2. Subjects of Oral ~~Test~~Interview. Applicants will be asked questions that will enable the examiners to properly evaluate and grade them on maturity, communication skills, judgment, leadership ability, managerial ability, appearance, demeanor, resiliency, emotional stability, self-confidence, friendliness, interest in the position, personal fitness for the position, and such other matters as are pertinent to the proper review and analysis of an applicant. Each applicant ~~for a particular examination must~~ will be asked questions in ~~similar~~ the same areas of inquiry so that the examiners ~~Commission~~ can satisfactorily compare the merits of the applicants.

~~G. Element FourSix – Polygraph Test. Based upon the results of the oral interviews, selected Applicants When directed by the Commission, all applicants who have successfully passed all prior elements of the examination must submit to a polygraph device deceptive test, commonly known as a lie detector test, at a time and place designated by the Commission. An applicant will be considered to have achieved an adverse result on the polygraph test if the Commission finds the applicant has been deceptive by (1) admitting in a pre-test interview wrongdoing that was not admitted in the applicant's application or in the course of the applicant's oral test before the Commission, or (2) admitting wrongdoing during the polygraph test that was not admitted in a pre-test interview, or (3) answering questions during the course of the polygraph test in a manner which the Commission determines to be indicative of deception. Results of the polygraph test must be submitted to the Commission and HR DepartmentDivision of Village Manager's Office for its evaluation. An unsatisfactory result on the polygraph test may subject the applicant to disqualification or to additional testing, at the discretion of the Secretary of the Commission and HR Department, including but not limited to an additional background and character check, an additional oral test, an additional polygraph test, or any combination of these tests.~~

Formatted: Indent: Left: 0", First line: 0"

~~H~~F. Element Five ~~S even~~—Detailed Character and Background Check and Polygraph. ~~At the request of the Commission, the Police Department shall conduct A~~a detailed character and background check will be conducted of an A~~a~~pplicant who has successfully passed all prior elements of the examination. The investigation~~check~~ must review the applicant's employment history, references, educational background, credit history, litigation history, military record, driving record, neighborhood and community standing and service, and such other data and information pertinent to a proper review and analyses of the applicants. The background investigation must fulfill the requirements of the Illinois Law

Enforcement Training Act, 50 ILCS 705/6.5. As a part of the detailed background check, applicants must submit to a polygraph device deceptive test, commonly known as a lie detector test, at a time and place designated by the Secretary of the Commission. Results of the polygraph test must be submitted to the Commission and HR Division of Village Manager's Office for its evaluation. An unsatisfactory result on the polygraph test may subject the applicant to disqualification or to additional testing, at the discretion of the Secretary of the Commission, including but not limited to an additional background and character check, an additional oral test, an additional polygraph test, or any combination of these tests.

~~I~~G. Element ~~Seven~~Six ~~Eight~~—Psychological Test and Medical Test. When directed by the Secretary of the Commission and after a conditional offer of employment has been made by the Village, selected ~~the~~ applicant to whom the conditional offer has been made must submit to a psychological test to be given by a qualified examiner selected by the Human Resources Division of Village Manager's Office ~~Department~~Commission. The test must be designed and administered solely to determine an applicant's suitability and fitness for the rank of police officer. The examiner shall prepare and submit a report of the examination and a recommendation as to the suitability of the Applicant to the rank of patrol officer to the Human Resources Division of Village Manager's Office ~~Department and the Commission, for its evaluation. The Commission shall determine, based on such report, whether the applicant passed the test, whether additional psychological testing is necessary, or whether the applicant failed the test.~~

The applicant to whom the conditional offer has been made must submit to a medical test, including without limitation a vision test and drug screening, by a licensed physician designated by the Human Resources Division of Village Manager's Office~~Department. Commission.~~ The test must be designed and administered for the purpose of determining fitness for, and physical ability to perform, all of the duties of the position sought. A medical test must be completed not earlier than 90~~180~~ days prior to the date of appointment. A positive result on a confirmatory drug screening test will be a sufficient basis for a determination by the Commission that an applicant has failed the medical test. At any point in the examination process, an applicant may be requested to submit evidence of vision sufficient to meet the standards of the Department to which he or she is applying or to submit to a vision examination to determine if his or her vision meets such standards. Each applicant shall be responsible for advising the Commission of any changes in his or her physical condition subsequent to the medical test. ~~The Commission may, at its discretion, require A~~an applicant may be required to submit to a follow-up medical test prior to appointment to a position.

Formatted: Indent: First line: 0"

H~~J~~. Deferral of Various Examination Elements.

1. Deferral Based on ~~Band~~ List Placement. The Secretary of the Commission or their designee ~~may defer~~ will ~~all~~select the applicants who will participate in subsequent elements of an examination. ~~for all applicants who are not included in the highest band being tested by the Commission~~

~~after the scoring of the written test. Those elements may be deferred until the Commission determines that the Register of Eligibles for which the examination is being administered contains, or may contain, fewer applicants than the Commission determines to be sufficient to properly fill the existing or potential vacancies in the rank of police officer. In the event of a deferral, all applicants for whom test elements have been deferred will not be ranked on a Register of Eligibles pursuant to these Rules and Regulations until after the deferred test elements have been administered to those applicants in the next highest band and such succeeding bands as the Commission determines is appropriate.~~

2. Deferral Based on Existence of Vacancies. All examination elements after administration of the oral interview ~~test~~, including the detailed character and background check, the psychological test, the polygraph test, and the medical test, may be deferred by the Secretary of the Commission or their designee for all applicants until the Secretary of the Commission or their designee receives notice from the Police Chief that a vacancy exists in the rank of police officer. ~~In the event of such deferral, all applicants who have successfully completed all examination elements that have been administered will be ranked on the Initial Eligibility Lists and will be integrated into the Register of Eligibles subject to the condition that they successfully complete each deferred element of the examination at the time it is administered.~~ When the Secretary of the Commission or their designee receives notice of a vacancy from the Police Chief, the Secretary of the Commission or their designee shall administer the deferred examination elements to the same number of the highest ranking applicants ~~who still qualify to remain on the Register of Eligibles~~ and who have not been so previously examined as there are vacancies to be filled and such additional number of the next highest ranking applicants as the Commission thereafter shall determine, either before or after receiving the results of the examination of the highest ranking applicants.

Section 5.3 Appointments of Police Officers.

A. Basis of Appointment; Notice. Appointments to the rank of police officer will be made in accordance with the Act. Promptly after ~~notification by the Police Chief that~~ a vacancy exists in the rank of police officer, the Chief ~~Commission~~ shall appoint to fill the vacancy the highest ranking applicant on the Register of Eligibles for that position. For each appointment, the vacancy will be filled with the then-highest ranking applicant on the Register of Eligibles, except that the ~~Commission~~Chief, at his or her~~its~~ discretion, may fill a vacancy in the rank of police officer by appointing an applicant from the applicable Register of Eligibles who has been awarded a certificate attesting to his or her successful completion of the Minimum Standards Basic Law Enforcement Training Course, as provided in the Illinois Police Training Act, ahead of applicants who have not achieved that certification. Individuals that are serving in the capacity of CSO for the Village for

Northbrook shall also be given deference over applicants that do not have such experience.

The Secretary of the ~~C~~commission will contact~~ause~~ the chosen applicant to be notified twice by telephone or e-mail over a three-work-day period. If the applicant does not respond within 24 hours after the second notice, then the applicant will be deemed to have waived his or her right to the appointment.

B. Waiver of Appointment; Notice. An applicant, within ~~seven~~ three days after the date of notice from the Secretary of the Commission of a conditional offer of appointment or an appointment, may waive the right to that appointment. That request must be made in writing to the Secretary of the Commission~~.~~, signed by the applicant. If the Commission receives a proper notice of waiver, then the Commission shall retain the name of the applicant on the Register of Eligibles until the next opportunity for an appointment and shall fill the current vacancy (or vacancies, if more than one appointment is being made at that time) pursuant to the procedures of Subsection A of this Section. If no notice of waiver or response to the notice of appointment is received within the prescribed time, then the Commission shall strike the applicant's name from the Register of Eligibles pursuant to Section 3.6 of these Rules and Regulations and shall fill the vacancy pursuant to Subsection A of this Section. No applicant may be allowed more than one waiver.

In the event of a subsequent vacancy to be filled from the Register of Eligibles, and the applicant qualifies for the appointment, the Commission will cause the applicant to be notified twice by telephone or e-mail over a three-work-day period. If the applicant does not respond within 24 hours after the second notice, then the applicant will be removed from the Register of Eligibles.

C. Certificate of Appointment. After appointment to the rank of police officer, the new police officer will receive a Certificate of Appointment signed by the ~~Chairperson~~ Chief of Police and Secretary of the Commission.

D. Oath of Office and Bond. Before entering into duty, a new police officer must take an oath and enter into a~~n~~ bond as provided by the Illinois law and Village ordinances.

Section 5.4 Police Department Probation.

A. Probation Generally. A newly appointed police officer will be on probation for a period of 18 months plus an additional six months if determined by the Police Chief to be appropriate based on job performance and approved by the Human Resources Division within the Village Manager's Office~~Commission~~.

B. Training During Probation. A newly appointed police officer, within six months after the date of his or her initial appointment, either (1) shall take and complete a training course approved by the Police Chief at an academy approved by the Police Chief on such dates as are designated by the Police Chief and be certified

by the Illinois ~~Local Governmental~~ Law Enforcement Training and Standards ~~Officers' Training~~ Board that he or she has successfully completed said course or (2) if previously certified by the Illinois ~~Local Governmental~~Law Enforcement Training and Standards ~~Law Officers' Training~~ Board as successfully completing an approved course, shall make a written request for and receive a waiver of additional training from the Illinois ~~Local Governmental Law Officers'~~Law Enforcement Training and Standards ~~Training~~ Board.

C. No Rights. During his or her probationary period, the police officer will be deemed not to have any vested, property, or other right or interest in his or her employment with the Village, and nothing in this Section or in any other provision of these Rules and Regulations may be construed or applied to create any such right or interest.

D. Dismissal. During his or her probationary period, the police officer may be dismissed ~~at any time by the Commission~~by the Chief with the approval of the Village Manager's Office, ~~without prior notice or hearing, on the recommendation of the Police Chief stating that~~if, in the Chief's opinion, it is not in the best interest of the Police Department to continue the employment of that police officer and consistent with the terms of any applicable collective bargaining agreement. The process for termination of a lateral probationary officer is the same as the process for an officer who is an original appointment ~~That recommendation must include a report setting forth the Police Chief's evaluation of the police officer and the circumstances of the recommendation. The report will be confidential and need not be made available to the police officer. The decision of the Commission will be final.~~

E. Suspension. During a probationary period, the Police Chief, with the approval of the Human Resources Director may suspend the probationary police officer without pay ~~for a period not exceeding five days~~, except that no suspension may be imposed without first giving the officer written notice thereof setting forth the basis for the suspension and advising the officer of his or her opportunity to be heard by the Chief or his or her designee concerning the relevant facts and circumstances. The process for suspension of a lateral probationary officer is the same as the process for an officer who is an original appointment

F. Disciplinary Provisions Not Applicable. The provisions of Chapter 15 of these Rules and Regulations do not apply to the dismissal or suspension of a probationary police officer. Nothing in this Section 5.4 may be construed to alter the application of, or to limit the effect of, the provisions of the Uniform Peace Officers' Disciplinary Act, 50 ILCS 725/1 *et seq*., when applicable to the investigation of misconduct of any peace officer.

CHAPTER 5a. POLICE OFFICER LATERAL ENTRY

Section 5a.1 Authority for Police Officer Lateral Entry

Formatted: Not Highlight

Formatted: Not Highlight

Formatted: Not Highlight

Formatted: Not Highlight

A. Lateral Entry. The Commission may determine to create and maintain a register of eligibles composed of experienced police officers or have one list with experienced and inexperienced candidates. who have applied for the position of police officer with the Village. The standards in this Chapter 5a and elsewhere in these Rules and Regulations and the Northbrook Municipal Code apply to applicants for lateral entry.

B. Commission Authority over Process. The Commission may create, and impose any process or element of the Lateral Entry process, including for example, but not limited to, the waiver of a part of an examination for a lateral entry applicant who is or was a full-time sworn police officer in a municipal, county, university, State, or federal law enforcement agency. ~~Also, for example, the Commission will not waive or modify any element of the lateral entry process the Commission deems essential including for example, but not limited to, certification by the Illinois Law Enforcement Training and Standards Board and proof of employment as a law enforcement officer within the last two years.~~

Section 5a.2 Application for Lateral Entry

A. Forms. Applications for lateral entry must be made on forms furnished by the Village or their designee. Applicants must comply with Section 4 above and complete the requirements of the forms.

B. Certification. An applicant for lateral entry must provide all documents as required in section 4.2.B and also must provide a copy of the applicant's certificate attesting to the applicant's successful completion of the Minimum Standards Basic Law Enforcement Training Course, as provided in the Illinois Police Training Act. ~~have been awarded a certificate attesting to the applicant's successful completion of the Minimum Standards Basic Law Enforcement Training Course, as provided in the Illinois Police Training Act or equivalent.~~

C. Experience. An applicant for lateral entry must be a full time certified police officer in good standing with their current law enforcement agency to apply.

Formatted: Font color: Red

D. ~~Character; Sound Health. An applicant must be of good moral character, of temperate habits, and of sound health, and must be physically able to perform the essential job functions of the position of police officer. All lateral applicants may be required to take a physical ability test to be conducted and graded by persons determined by the Commission. If a physical ability test is given, then only applicants who have participated and passed that test will be allowed to continue in the examination process. Applicants who fail to achieve a passing grade on the physical ability test will be notified.~~

E. ~~Citizenship; Language. An applicant must be a citizen of the United States or must be legally authorized to work in the United States under federal law or is an individual against whom immigration action has been deferred by the U.S. Citizenship and Immigration Services under the federal Deferred Action for~~

Childhood Arrivals (DACA); and possesswith the ability to speak and understand the English language sufficiently to discharge the duties of police officer.

F. Documents. An applicant must provide all documents as required in section 4.2.B and a copy of the applicant's birth certificate and high school diploma or G.E.D. certificate, and also must provide a copy of the applicant's certificate attesting to the applicant's successful completion of the Minimum Standards Basic Law Enforcement Training Course, as provided in the Illinois Police Training Act. If applicable, the applicant also must provide any Military Service Records including Discharge Papers (DD Form 214).

G. Sections 4.1D, 4.2D Standards. An applicant must qualify under the standards set forth in Section 4.1D and 4.2D of these Rules and Regulations.

Section 5a.3 Age Requirements

The age criteria and limitations set for in these Rules and Regulations for the position of police officer do not apply to police office lateral entry applicants.

Section 5a.4 Notice

The Commission will accept applications on a continuous basis for lateral candidates. When the Commission determines to accept applications for police officer lateral entry, the Commission will post an announcement advertising the process not less than three weeks before the scheduled testing process. The announcement will include basic requirements and contact information in the position announcements.

Section 5a.5 Hiring Process

At the request of the Chief of Police, the Commission may proceed with the lateral entry process, which includes the following phases:All applicants must submit themselves for each element of an examination for the rank of Police Officer at the times and places established by the Secretary of the Commission. An examination will consist of the elements outlined in Sections 5.1 and 5.2.

1. Completion of an employment application and related documents.

2. A pre-screening of the applicants by the Police Department and Human Resources Department.

3. An oral interview with the Police Department, and Human Resources and Commission (which requires a 70% score to continue in the process).

4. A character and detailed background investigation.

5. A polygraph examination.

6. Post-offer examinations including without limitation a physical agility test, a psychological evaluation, a medical examination, a vision screening, and drug screening.

Each phase of the process is pass/fail except as stated otherwise. All phases of the process are required.

Formatted: Indent: Left: 0.5"

Formatted: Indent: Left: 0.5", Hanging: 0.5"

Section 5a.6 Police Officer Lateral Entry Eligibility Lists

A. Establishment, Use, Replenishment, and Replacement of Eligibility List shall follow the procedure for maintenance of the police officer eligibility list as outlined in Chapter 3. .

1. The Commission will continuously accept may establish a police officer lateral entry applications and maintain an eligibility list at any time.

Formatted: Indent: Left: 0.5", Hanging: 0.5"

2. The Commission may, but is not in any way required to, appoint a police officer from the police officer lateral entry eligibility list.,

Formatted: Indent: Left: 0.5", Hanging: 0.5"

3. The police officer lateral entry eligibility list may be used by the Commission simultaneously with the Police Department Register of Eligibles provided in Chapter 3 of these Rules and Regulations.

4. The Commission may determine from time to time that a police officer lateral entry applicant will be listed also on the Police Department Register of Eligibles. In that case, the lateral entry applicant will be ranks ranked on the Police Department Register of Eligibles in accordance with the applicant's test score.

5. The Commission at any time may create a new police officer lateral entry eligibility list to replace the existing police officer eligibility list.

Formatted: Indent: Left: 0.5", Hanging: 0.5"

6. The Commission may determines at any time to that, under current circumstances, it is not necessary to maintain a police officer lateral entry eligibility list.

B. Preference Points. The Commission will add preference points to a police officer lateral entry applicant's score prior to placement on the police officer lateral entry list consistent with Section 3.3 and as provided by law.

C. Managing Eligibility List. A dated copy of the police officer lateral entry eligibility list will be sent to each person appearing on the list. A dated copy of the police officer eligibility list will be posted on the Village's publicly accessible webste. When an applicant is added or stricken from the police officer lateral entry eligibility list, an updated list will be posted at the Police Department and on the Village of Northbrook website.

Section 5a.7 Preference Points

As provided in the Illinois Board of Fire And Police Commissioners Act (65 ILCS 5/10-2.1), Section 3.3 of these Rules and Regulations, and other provisions of these Rules and Regulations, an applicant who qualifies, or is otherwise entitled to military or educational preference points, will be awarded five points to the applicant's final grade.

Section 5a.8 Selection

A. Determination. When the Commission receives a written request from the Village for appointment of a probationary police officer, then the Commission will choose an applicant from the Police Department Register of Eligibles or from the police officer lateral entry eligibility list, in accordance with these Rules and Regulations.

B. Conditional Offer. In the case of a lateral entry applicant, a conditional offer of employment will be made only to the most qualified applicant (as determined by the Commission) among the highest ranked five applicants on the police officer lateral entry eligibility list. The applicant chosen by the Commission may be, or may not be, the first person on the list. The evaluation of the applicants will include, among other things, consideration of the following qualifications:

1. Law enforcement experience.

2. Law enforcement training beyond the Basic Law Enforcement Course.

3. Training and experience in specialty law enforcement functions.

4. Result of oral interview.

5. Result of background investigation.

If the Chief of Police determines that the top ranked applicant should not be selected, then the Chief of Police will advise the Commission and provide the basis for the Chief's decision. The Commission will make the determine whether the applicant or other applicant from the lateral entry eligibility list will be chosen.

C. Post Offer Matters. If a conditional offer of employment is extended to a lateral entry applicant, then that lateral entry applicant must pass a psychological examination, a thorough medical examination which will include a drug screen, a vision examination, and a hearing examination. The examinations are made with cost to the applicant. The the same examinations detailed in Section 5.2. Those examinations will be analyzed, scored if applicable, evaluated, and interpreted in a uniform manner consistent with the manner these tests are performed for original appointments in section 5.2..

D. Removal from List. The Commission may strike from the police officer lateral entry eligibility list and, if applicable, the Police Department Register of Eligibles

any applicant who has failed a required standard in these Rules and Regulations or a required test.

Section 5a.9 Professional Examinations and Tests

A. Psychological Examination. Each applicant must submit to a psychological examination by a psychologist or psychiatrist determined by the Commission. The failure of an applicant to take or successfully complete an exam will be disqualified from further consideration.

B. Polygraph Examination. Each applicant must submit to a polygraph examination at the time and place set by the Commission. The failure of an applicant to take or successfully complete the test will be disqualified from further consideration. The result of a polygraph examination will not, by itself, be used to disqualify an applicant but may be used to assist in further background checks or pre- or post-test interviews.

C. Drug Screen. Each applicant must pass a drug screening test to establish the applicant's fitness to perform the duties of police officer. The drug screening test will be arranged by the Commission. The failure of an applicant to undergo the drug screening test will be disqualified from further consideration.

D. Medical Examinations. Each applicant must undergo a medical examination, which will be performed by a licensed physician. If an application is found to be physically unable to perform any essential function of the job of police officer the that application will be disqualified from further consideration.

Section 5a.108 Appointments

A. The CommissionChief may fill aA vacancy in the rank of police officer can be filled with a lateral entry applicant as provided in this Chapter 5a in accordance with the standards and processes provided in these Rules and Regulations for entry level appointments of police officers.

Formatted: Indent: Left: 0", Hanging: 0.5"

B. Post Offer Matters. If a conditional offer of employment is extended to a lateral entry applicant, then that lateral entry applicant must pass the same examinations detailed in Section 5.2. Those examinations will be analyzed, scored if applicable, evaluated, and interpreted in a uniform manner consistent with the manner these tests are performed for original appointments in section 5.2.

C. Removal from List. The Commission may strike from the police officer lateral entry eligibility list and, if applicable, the Police Department Register of Eligibles any applicant who has failed a required standard in these Rules and Regulations or a required test.

~~**Section 5a.11 Probationary Appointment**~~

~~A. Process and Duration of Probation. All appointments of police officers from the police officer lateral entry eligibility list are made for a probationary period of 18 months.~~

~~B. Status of Probationary Officer. The employment of a probationary police officer may be terminated summarily, without advanced notice to the officer. A probationary police officer is are not entitled to the protection afforded to non-probationary officers by statute, these Rules and Regulations, or a collective bargaining agreement. The process for termination of a lateral probationary officer is the same as the process for an officer who is an original appointment.~~

CHAPTER 6. APPLICATIONS FOR POLICE DEPARTMENT PROMOTIONAL POSITIONS

~~a~~

Section 6.1 Filing of Application.

Formatted: hkSubtitle,st, Hyphenate

An application for a promotional position in the Police Department must be filed with the Commission on an approved form. No application will be accepted until notice of an examination for a position has been given or has been waived in accordance with Section 2.2 of these Rules and Regulations. Also, no application will be accepted less than two weeks prior to the date of an examination. The Commission shall cause each application to be noted with the date and hour it was received, which time shall determine the timeliness and priority of filing.

Section 6.2 Special Standards.

The Commission may set particular standards for eligibility for a promotional position if the Commission determines that the position requires special qualifications.

Section 6.3 Disqualification.

A. Grounds. The Commission may refuse to examine, or after examination refuse to certify as eligible, or after certification as eligible refuse to retain on the Register of Eligibles, any applicant:

1. who is on probationary status; or

2. who is found lacking in any of the established general requirements stated in this Chapter or established by the Commission; or

3. who is a user of narcotics or other non-prescription drugs, or a habitual user of intoxicating beverages; is a gambler; or is not a person of good character; or

4. who has been convicted of a felony, a crime of moral turpitude, or a misdemeanor specifically listed in 65 ILCS 5/10-2.1-6 as amended from time to time; or

5. who has been shown to have attempted to practice any dishonesty, deception, or fraud in his or her application, examination, or other submissions to or dealings with the Commission, the Police Department, or the Village; or

6. who has failed to abide by the rules and procedures governing any aspect of the application process; or

7. who is physically or mentally unable to perform the duties of the position to which he or she seeks appointment; or

8. who has been dismissed from any public service for good cause; or

9. whose character or employment references are unsatisfactory; or

10. who has applied for a position in the Police Department and is, or has been, classified as a conscientious objector; or

11. who does not have a valid automobile driver's license; or

12. who does not satisfy the requirements of the job description published by the Village for the position for which he or she is applying.

B. Notification. ~~.~~Any applicant who has been disqualified will receive notice from the Commission of the disqualification.

Section 6.4 Release of Liability.

In consideration of being admitted to the examination process, all applicants shall execute and deliver to the Commission or its designated representative a release of all liability as a result of participating in the examinations, and all waivers and releases of information necessary to allow the Commission to complete all elements of the examinations, on forms approved by the Commission.

Section 6.5 Admission to Examination.

No person shall knowingly be admitted to any element of any examination who does not meet the minimum qualifications fixed for the position sought. The fact that a person is admitted to an element of an examination shall not be considered as evidence that he or she is qualified or eligible for the position.

Section 6.6 No Creation of Applicant Right or Interest.

Neither the filing of an application, nor the acceptance of an application, nor an applicant's satisfaction of the general or special qualifications for filing an application or being admitted to an examination, nor any provision of these Rules and Regulations shall be construed as creating any vested, property, or other right or interest in any person to apply for, be examined for, or be appointed to any position in the Departments.

Section 6.7 Correction of Applications.

A defective application will be returned to the applicant for correction, if the applicant otherwise is qualified for the position he or she seeks. All returned applications must be resubmitted with the time period established by the Commission or its designated representative.

CHAPTER 7. POLICE DEPARTMENT PROMOTIONAL EXAMINATIONS AND APPOINTMENTS

Section 7.1 Police Department Promotional Examination Elements; Grading.

A. Examination Elements. All applicants must submit themselves for each element of a promotional examination at the times and places established by the Commission. An examination for a promotional position will consist of the following elements and will require the indicated minimum passing grade:

Examination Element		Percent of Total Score
Element 1.	Seniority:	5 percent
Element 3.	Written Test:	30 percent
Element 4.	Oral Test:	45 percent
Element 5.	Chief's Merit Rating:	20 percent
Total Possible Score:		100 percent
Minimum Required Score:		75 percent

The examination elements may be administered in any order determined by the Commission. The scoring set forth in this Subsection does not include adjustments for military preferences.

B. Grading Generally. Each applicant's score will be calculated based on the percentages attributed to Elements 1, 3, 4, and 5.

The following process will be used to calculate the final score for an examination element:

- First, the points achieved for the examination element shall be expressed as a percentage of the total points possible for that element.
- Second, that percentage shall be multiplied by 100.
- Third, that product shall be multiplied by the Percent of Total Score in Subsection 7.1A to yield the final score for that element.

For example, the achievement of 129 points for a 150-point written test results in a final score for that test element of 21.5 points, derived as follows: 129 points *equals* 86 percent of 150 possible points; 86 percent *multiplied by* 100 *equals* 86; 86 *multiplied by* 25 percent (the Percent of Total Score for the written test) *equals* 21.5 points.

No information concerning grades and no test scores will be disclosed or provided to any applicant until after the posting of an Initial Eligibility List or such other time as may be designated specifically by the Commission. The names of persons failing the examination need not be posted, published, or disclosed by the Commission except to such person. Each applicant will be notified within a reasonable time of the result of his or her examination.

C. Method of Filling Vacancies. A vacancy in a promotional rank will be filled by promotion when practical. An examination for a promotional position will be competitive among the qualified members of the next lower rank who desire to submit themselves to the examination. 65 ILCS 5/10-2.1-11 and 10-2.1-15.

Section 7.2 Police Department Promotional Examination Element Descriptions and Procedures.

A. Element One—Seniority. The Commission shall award to each applicant for a promotional position points for full years of service within the Police Department according to the following schedule:

Full Years of Service Within Department	Points
• at least 1.5 years, but less than 3 years:	1
• at least 3 years, but less than 7 years:	3
• 7 years or more:	5

The maximum number of points that can be awarded for seniority is 5 points after 7 full years of service within the Department.

C. Element Three—Written Test. All applicants for a promotional position shall submit themselves for a written test.

1. Procedure. The written test for a promotional position shall be conducted and graded by two or more Commissioners or by a testing agency or service designated by the Commission, in a room or rooms designated by the Commission for that purpose at a Village facility or a testing agency's facility.

2. Finality. All test papers are the property of the Commission and any testing entity assisting the Commission, and the grading thereof by the Commission shall be final and conclusive and not subject to review except only as provided by the Commission or the testing entity with the approval of the Commission.

D. Element Four—Oral Test. All applicants for a promotional position shall submit themselves for an oral test.

1. Written Statement. Each applicant shall submit, prior to the deadline established by the Commission, a written statement containing the reasons he or she should be selected for the promotional position for which he or she has applied. The statement should describe the applicant's qualifications for the position, including any items which he or she feels have prepared him or her for the position, any pertinent community service he or she has performed, and any other matters reflecting a commitment to Village community and to the Police Department.

2. Oral Test. The Commission shall conduct the oral test and may use examiners to assist it. The examiners shall discuss the merits of each applicant tested and shall grade the applicant.

3. Subjects of Oral Test. Applicants shall be asked questions that will enable the examiners to properly evaluate and grade them on maturity, communication skills, judgment, leadership ability, managerial ability, appearance, demeanor, emotional stability, self-confidence, friendliness, interest in the position, personal fitness for the position, and such other matters as are pertinent to the proper review and analysis of an applicant. Each applicant for a particular examination shall be asked questions in similar areas of inquiry so that the examiners can satisfactorily compare the merits of the applicants.

E. Element Five—Chief's Merit Rating. The Police Chief shall provide the Commission with his or her rating score of each applicant for the promotional position. Such rating shall be in a form determined by the Chief to be appropriate

to judge the qualifications of the applicant individually and relative to the other applicants. The Commission shall add the Chief's rating score to each applicant's scores on the other elements of the examination.

Section 7.3 Police Department Promotional Appointments.

A. Basis of Appointment. Appointments to a promotional position for which a Register of Eligibles has been established shall be made in accordance with the Act. Promptly after notification by the Police Chief that a vacancy exists in a promotional rank, as designated by the Police Chief, the Commission shall appoint to fill the vacancy that applicant from among the three highest ranking applicants on the Register of Eligibles for that rank who in the opinion of a majority of the Commissioners is best suited to and qualified for the position to be filled, except that when a Register of Eligibles for a promotional rank contains fewer than three applicants, the choice shall be from such fewer applicants. 65 ILCS 5/10-2.1-14 and 10-2.1-15.

B. Waiver of Appointment. An applicant, within seven days after the date of notice from the Commission of his or her appointment, may request a waiver of the right to appointment. That request must be made in writing, signed by the applicant. That request must include a statement of the reasons for the request and ask that the Commission retain the applicant's name on the Register of Eligibles. The Commission may determine to strike the applicant's name from the Register of Eligibles or, if the Commission determines that the applicant's statement of reasons constitutes good and sufficient grounds for a waiver, then the Commission may approve the waiver. If the Commission approves the waiver, then the Commission shall retain the name of the applicant on the Register of Eligibles and shall fill the vacancy pursuant to the procedures of Subsection A of this Section. If the waiver is not approved, or if no request for waiver or response to the notice of appointment is received within the prescribed time, then the Commission shall strike the applicant's name from the Register of Eligibles pursuant to Section 3.6 of these Rules and Regulations and shall fill the vacancy pursuant to Subsection A of this Section. The Commission may approve no more than one waiver for an applicant.

C. Certificate of Appointment. After appointment to a promotional position in the Police Department, an applicant shall receive a Certificate of Appointment signed by the Chairperson and Secretary of the Commission.

CHAPTER 8. POLICE DEPARTMENT TEMPORARY APPOINTMENTS AND VOLUNTARY DEMOTIONS

Section 8.1 Police Department Temporary Appointments.

The Commission, at the request of the Village Board and without complying with the provisions of these Rules and Regulations otherwise applicable to appointments, shall

make temporary appointments to the Police Department to prevent a stoppage of public business, to meet extraordinary situations, or to prevent the material impairment of the Police Department's ability to carry out its functions. Temporary appointments may not be made to exceed 60 days and no person may receive a temporary appointment more than twice in any calendar year. 65 ILCS 5/10-2.1-16.

Section 8.2 Police Department Voluntary Demotions.

Any member of the Police Department may request a demotion to a lower rank, subject to the approval of the Commission. Demotion will result in a reduction in compensation to a rate not exceeding the maximum rate of the lower rank.

ARTICLE III: FIRE DEPARTMENT HIRING

CHAPTER 9. FIRE DEPARTMENT REGISTERS OF ELIGIBLES

Section 9.1 Establishment of Fire Department Registers of Eligibles; Tied Scores.

The Secretary of the Commission or their designee shall establish and maintain a Register of Eligibles for each rank within the Fire Department, except for the position of Fire Chief and the Managerial Positions. A Register of Eligibles shall rank all applicants who have passed all elements of an examination for the stated rank in order of their relative excellence as determined by the examination and preferences, but without reference to priority of time of examination. In the event of tied scores, the tie will be broken by lot in the presence of at least two Commissioners, at a regular or special meeting of the Commission, in a manner the Commission determines is appropriate under the circumstances. To qualify for placement on the final Register of Eligibles, an applicant's total score, before the award of any preference points, must be at or above the minimum provided by the Act.

Section 9.2 Initial Fire Department Eligibility Lists.

A. Firefighter/Paramedic Positions. Within 60 days after all applicants for the rank of firefighter/paramedic who have completed the first three elements of the firefighter/paramedic examination (*see* Section 11.1), the Secretary shall prepare and post an Initial Eligibility List of the applicants who passed all of those elements, ranking those applicants in order of their relative excellence.

B. Promotional Positions. Within 60 days after all applicants for a promotional rank have completed all applicable elements of an examination (*see* Section 13.1), the Secretary shall prepare and post an Initial Eligibility List of the applicants who passed all of those elements, ranking those applicants in order of their relative excellence.

Section 9.3 Fire Department Preference Points.

A. Maximum Possible Fire Department Entry-Level Points. An applicant for an entry-level position in the Fire Department may receive preference points if that applicant qualifies for such points under this Section 9.3. The Commission may prescribe the maximum number of preference points awarded under this Section, but the maximum number of preference points may not be less than 10 points or more than 30 points. Points may be given only if a proper and valid claim for preference points has been made and only if the standards for such preference points have been met under the Act and these Rules and Regulations.

B. Available Fire Department Entry-Level Points. Entry-level preference points in the Fire Department may be awarded for veteran service, fire cadet completion, education, paramedic certification status, experience, and residency as follows:

1. Veteran Service Points. An applicant will be awarded 5 points if (a) the applicant was engaged in the active military or naval service of the United States for a total cumulative period of at least one year and was honorably discharged or (b) the applicant is currently or has been on inactive or reserve duty in such military or naval service for a total cumulative period of at least one year, except as provided in Subsection 9.3C1 of these Rules and Regulations.

2. Fire Study and Cadet Points. An applicant who has successfully completed two years of study in fire techniques or cadet training within a cadet program established under the rules of the Joint Labor and Management Committee, as defined in Section 50 of the Fire Department Promotion Act, may be awarded points in an amount set by the Commission prior to issuance of a notice of examination under Section 2.2 of these Rules and Regulations.

3. Education Points. An applicant who has obtained an associate's degree in the field of fire service or emergency medical services, or a bachelor's degree from an accredited college or university, may be awarded points in an amount set by the Commission prior to issuance of a notice of examination under Section 2.2 of these Rules and Regulations.

4. Paramedic Points. An applicant may be awarded 2½ points if the applicant, at the time of the examination, has obtained and holds a valid State of Illinois certification of an Emergency Medical Technician/Basic. Alternatively, an applicant may be awarded 5 points if the applicant, at the time of the examination, has obtained and holds a valid State of Illinois certification of an Emergency Medical Technician/Paramedic.

5. Experience Points. An applicant may be awarded up to 5 preference points under the following standards. This number of 5 experience points presumes a rating scale totaling 100 points for the Register of Eligibles. If fewer than 100 total points are used in the rating scale for the Register of Eligibles, then the points awarded under this Subsection b will be decreased proportionately.

    a. Paid-On-Call, Certified Firefighter Experience with Village. An applicant will be awarded 0.5 point for each year of successful service as a (a) paid-on-call or part-time certified Firefighter II, (b) State of Illinois or a nationally licensed EMT-B or EMT-I, or (c) any combination of these for the Village, if the applicant at the time of the examination has been serving as one or more of these continuously for at least two years immediately prior to the time of the examination except for any periods of military service or other absences excused by the Fire Chief. No excused absence will be considered a break in service, but no excused absence will be counted toward the minimum required two years of continuous service. The

applicant may be awarded up to a maximum of 2½ points under this Subsection a.

b. Certified Advanced Technician Firefighter and Licensed Paramedic Experience. An applicant will be awarded 1 point for each year of successful, continuous service as a certified Advanced Technician Firefighter or Firefighter III and State of Illinois or nationally licensed paramedic. To qualify for any point under this Subsection b, the most recent period of continuous one-year service must have occurred immediately prior to the time of the examination. The applicant may be awarded up to a maximum of 5 point under this Subsection b.

c. Other Experience. An applicant from outside the Village will be awarded 5 points if the applicant has been employed successfully and continuously as a full-time firefighter or firefighter-paramedic by fire protection district or another municipality within the State of Illinois for at least two years. To qualify for the 5 points under this Subsection c, the period of continuous employment must have occurred immediately prior to the time of the examination.

6. Residency Points. An applicant whose principal residence is located within the Village may be awarded points in an amount set by the Commission prior to issuance of a notice of examination under Section 2.2 of these Rules and Regulations.

C. Time and Method of Claiming Fire Department Entry-Level Preference Points.

1. Veteran Service Points. Within 10 days after the posting of an Initial Eligibility List, each applicant on that list who may claim preference points for veteran service must submit his or her claim for those veteran service points in writing to the Commission. Claims not made within that 10-day period will be deemed waived. The applicant, at the time of submitting a claim for veteran service points, must submit evidence of qualification for those points.

2. Paramedic and Experience Points. Within 10 days after the posting of an Initial Eligibility List, each applicant who may claim preference points for paramedic status or for paid-on-call or other experience must submit his or her claim for one or more of those preferences to the Commission. Claims not made at or before that time will be deemed waived. The applicant, at the time of submitting a claim for a preference, must submit evidence of qualification for that preference.

Paramedic and experience preference points will be added to the applicant's written grade prior to placement of the applicants on a final Register of Eligibles, but only if the applicant has completed the written examination with at least the minimum passing grade.

3. Fire Study and Cadet, Education, and Residency Points. Within 10 days after the posting of an Initial Eligibility List, each applicant on that list who may claim preference points for fire study and cadet, education, or residency must submit his or her claim for that preference in writing to the Secretary of the Commission or their designee. Claims not made within that 10-day period will be deemed waived. The applicant, at the time of submitting a claim for a preference, must submit evidence of qualification for that preference.

4. Limitation of Award of Preference Points. An applicant may not receive an amount of preference points under this Section 9.3 that would move the applicant ahead of any veteran on the Initial Eligibility List. Instead, the applicant may receive that number of preference points that will not move the applicant ahead of any veteran. If two or more applicants receiving preference points are prevented from receiving all of their points because they cannot move ahead of a veteran, then those applicants will be placed on the Initial Eligibility List below the veteran and in rank order based on the total preference points they would have received except for the prohibition of moving ahead of a veteran. In the event of tied scores, the tie will be broken by lot in the presence of at least two Commissioners, at a regular or special meeting of the Commission, in a manner the Commission determines is appropriate under the circumstances.

D. Fire Department Promotional Preference Points.

1. Military Service Points. Upon receipt of a valid claim of preference from an applicant for a promotional position in the Fire Department, the Secretary shall add 7/10 of one point to the applicant's total examination score for each six months or fraction thereof of active military service, not exceeding 30 months.

2. One Time Only Preference. No person shall receive a preference for a promotional appointment after that person has received one promotion, during his or her employment by the Fire Department, from a Register of Eligibles on which he or she was allowed such preference.

Section 9.4 Final Fire Department Register of Eligibles.

After the process of adding preference points has been completed, the Secretary shall re-rank the applicants on each Initial Eligibility List according to their scores including preference points. Each applicant's order of eligibility as thereupon determined will be the basis for placement of the applicant on the Register of Eligibles.

Section 9.5 Additions to Fire Department Registers of Eligibles.

After determining the final order of eligibility for an Eligibility List, the Secretary shall immediately integrate that Eligibility List into the existing Register of Eligibles, if

one exists, which integration must be made in such a manner that all applicants are ranked on that Register of Eligibles in the order of their relative excellence as determined by examination and allowable preference points, but without reference to priority of time of examination or completion of any Initial Eligibility List. An applicant who was already on the existing Register of Eligibles and who took the current examination for the new Eligibility List will be ranked on the Register of Eligibles based on his or her performance on the current examination and not on his or her prior listing on the Register of Eligibles. The re-ranking of an applicant on a Register of Eligibles whose name already was included on that Register of Eligibles will not extend the time period for eligibility of that applicant to remain on that Register of Eligibles. After the transfer of the names of all applicants on an Initial Eligibility List to the Register of Eligibles, the Initial Eligibility List must be abolished and will be of no further force or effect.

Section 9.6 Removal of Names from Registers of Eligibles.

A. Entry-Level Registers. The Secretary shall strike from the Register of Eligibles for the rank of firefighter/paramedic the name of:

1. any applicant who may be disqualified pursuant to any provision of these Rules and Regulations; and

2. any applicant who has been on that Register of Eligibles for more than ~~two~~ one year~~s~~ after the initial posting of that Register, regardless of when all examination elements have been administered and regardless of whether that Register of Eligibles has been integrated with new applicants, except that the Commission in its discretion may extend the two-year period of the entire Register of Eligibles up to a total of six additional months, if necessary; and

3. any applicant who ceases to meet the qualifications for the rank of firefighter/paramedic; and

4. any applicant who does not, or cannot, accept the position within ~~seven~~ three days after receiving notice of his or her appointment, except as otherwise provided in Subsection 11.3B of these Rules and Regulations.

B. Promotional Registers. The Secretary shall strike from the Register of Eligibles for a promotional rank the name of:

1. any applicant who may be disqualified pursuant to any provision of these Rules and Regulations; and

2. any applicant who has been on that Register of Eligibles for more than three years; and

3. any applicant who ceases to meet the qualifications for the rank to be filled from that Register of Eligibles; and

4. any applicant who does not, or cannot, accept the position within seven days after receiving notice of his or her appointment, except as otherwise provided in Subsection 11.3B of these Rules and Regulations.

CHAPTER 10. APPLICATIONS FOR POSITION OF FIREFIGHTER/PARAMEDIC

Section 10.1 Minimum Requirements and Standards for Firefighter/Paramedic Applicants.

A. Citizenship. At the time of filing an application, an applicant for a position in the Fire Department must be a citizen of the United States, or must be legally authorized to work in the United States under applicable laws and statutes.

B. Age.

1. Proof of Age. Each applicant must provide proof of his or her birth date at time of filing an application.

2. Maximum Age for Firefighter/Paramedic Position. No person who is 35 years of age or older is eligible to take an examination for the position of firefighter/paramedic unless that person has had previous employment as a firefighter for the Village. This age limitation does not apply to (a) any person previously employed as a full-time firefighter in a regularly constituted fire department of (i) any municipality or fire protection district located in Illinois, (ii) a fire protection district whose obligations were assumed by a municipality under Section 21 of the Illinois Fire Protection District Act, or (iii) a municipality whose obligations were taken over by a fire protection district or (b) any person who has served a municipality as a regularly enrolled volunteer, paid-on-call, or part-time firefighter, or (c) any person who turned 35 while serving as a member of the active or reserve components of any of the branches of the Armed Forces of the United States or the National Guard of any state, whose service was characterized as honorable or under honorable, if separated from the military, and is currently under the age of 40.

3. Minimum Age for Firefighter/Paramedic Position. No person who is younger than 21 years of age is eligible for employment as a firefighter/paramedic. A person who will reach the age of 21 years within six months after the date of examination stated in a notice of examination issued under Section 2.2 of these Rules and Regulations is eligible to take the examination, but may not be employed until reaching the age of 21 years.

B. Fingerprinting. Each applicant may be fingerprinted after successfully completing the written and physical ability elements of the entry-level examination. A classified set of the fingerprints of every applicant who is

offered employment as a firefighter/paramedic will be filed by the Commission with the Illinois Department of State Police and with the Federal Bureau of Investigation.

C. Physical Ability Exam- Applicants are required to undergo an examination of physical ability to perform the essential functions included in the duties they may be called upon to perform as a member of the fire department. The ~~Commission~~ Chief may elect to conduct a~~its own~~ properly validated physical ability test or to use the fire Service Candidate Physical Ability test (CPAT) with ladder certification for the purpose of test physical fitness. If CPAT is used, then each applicant must provide proof of a current valid CPAT card acquired within the last twelve (12) month period with their completed job application to qualify for placement on any list of eligible candidates. The CPAT shall be prepared and administered by an agency that is licensed by the International Association of Firefighters to administer the CPAT. Any costs associated with the CPAT certification will be at the expense of the applicants. If the Board conducts its own test, then the Board will give notice in the notice of examination. The physical ability examination shall be a pass/fail examination, and complies with applicable law.

D. Fire Department Minimum Education Standards. No person will be eligible to apply for a position in the Fire Department unless that person has a high school diploma or G.E.D. certificate, Emergency Medical Technician/Basic, and one of the following qualifications:

1. That person has successfully completed at least two years of studies—equaling an associate's degree, or 60 hours of course work, or equivalent credits—at a junior college, college, or university accredited by a nationally recognized accreditation agency; or

2. That person has qualified for and received State of Illinois certification an Paramedic; or

3. That person has qualified for and received State of Illinois certification as both a Basic Operations Firefighter or Firefighter II.

E. Fire Department Special Standards. The Secretary of the Commission or their designee at recommendation of the Chief may set, at the time that it calls an examination, particular standards for eligibility for the rank of firefighter/paramedic if the Chief ~~Commission~~ determines that the position requires special qualifications. The Chief~~Commission~~ also may require evidence from each applicant establishing that the applicant meets those particular standards.

Section 10.2 Fire Department Application Form, Basic Standards.

A. Application Form; Completion. The Secretary of the Commission or their designee~~its designated representative~~ shall furnish the application form, which

form must be completed in its entirety by any applicant, including all supplementary information and documentation.

B. Supplementary Information. At the time of filing an application, the applicant must furnish the following:

1. a certified copy of his or her birth certificate;

2. a copy of his or her high school diploma or its equivalent;

3. a copy of his or her transcripts of post-high school study, if applicable;

4. a copy of his or her State of Illinois certifications as Emergency Medical Technician/Paramedic or Basic Operations Firefighter or Firefighter II and Emergency Medical Technician/Basic, if applicable;

5. a copy of his or her military service record, discharge papers, and U.S. Government Form DD214, if applicable;

6. a copy of his or her driver's license;

7. a copy of each other certificate or license required by these Rules and Regulations; and

8. a copy of his or her college or university degree and, if requested, a copy of a certified transcript of his or her course work from an accredited college or university.

C. General Character, Health. An applicant must be of good moral character, of temperate habits, and must be physically able and in a sufficient state of health to perform the duties of the position for which he or she is applying. The burden of establishing compliance with these standards rests on the applicant.

D. Exclusion for False Statements. A false statement knowingly made by a person in an application, or connivance in any false statement made in any supplementary information that may accompany the application, or complicity in any fraud related to an application or supplementary information shall be regarded as good cause for exclusion from the examination.

Section 10.3 Filing of Fire Department Application.

The application for the position of firefighter/paramedic must be filed, prior to taking an examination, with the Secretary of the Commission or with an agency or representative designated by the ~~Commission~~Chief. No application will be accepted until notice of an examination for a position has been given in accordance with Section 2.2 of these Rules and Regulations, and applications will be accepted only during the period designated by the Commission pursuant to Section 2.2. The recipient of the application on behalf of the Commission shall note on the application the date it was received. Each

applicant shall be responsible for advising the ~~Commission~~ Secretary of the Commission or their designee of any changes in his or her address, email or telephone number.

Section 10.4 Disqualification.

A. Grounds. The Commission may refuse to examine, or after examination refuse to certify as eligible, or after certification as eligible refuse to retain on the Register of Eligibles, any applicant:

1. who is found lacking in any of the established general requirements, or in any special standards established pursuant to Subsection 10.1E of these Rules and Regulations, for an entry-level position stated in these Rules and Regulations or in the Act; or

2. who is a user of narcotics or other non-prescription drugs, or a habitual user of intoxicating beverages; is a gambler; or is not a person of good character; or

3. who has been convicted of a felony, a crime of moral turpitude, or a misdemeanor specifically listed in 65 ILCS 5/10-2.1-6 as amended from time to time; or

4. who, in the judgment of the Commission, has practiced or attempted to practice any dishonesty, deception, or fraud in his or her application, examination, or other submissions to or dealings with the Commission, the Fire Department, or the Village; or

5. who has failed to abide by the rules and procedures governing any aspect of the application process; or

6. who is physically or mentally unable to perform the duties of the position to which he or she seeks appointment; or

7. who has been dismissed from any public service for good cause; or

8. whose character or employment references are unsatisfactory; or

9. who, for a position in the Fire Department, does not meet the standards set forth in Subsection 10.1D of these Rules and Regulations; or

10. who has failed to appear for, or failed, any element of the examination or otherwise has not successfully completed any portion of the examination process; or

11. who does not have a valid automobile driver's license.

B. Notification;. Any applicant who has been disqualified will receive notice from the Commission of the disqualification.

Section 10.5 Release of Liability.

In consideration of being admitted to the examination process, all applicants must execute and deliver to the Commission or its designated representative a release of all liability as a result of participating in the examinations, and all waivers and releases of information necessary to allow the Commission to complete all elements of the examination, on forms approved by the Commission.

Section 10.6 Admission to Examination.

No person shall knowingly be admitted to any element of any examination who does not meet the minimum qualifications established for the position of firefighter/paramedic. The fact that a person is admitted to an element of an examination will not be considered as evidence that he or she is qualified or eligible for the position.

Section 10.7 No Creation of Applicant Right or Interest.

Neither the filing of an application, nor the acceptance of an application, nor an applicant's satisfaction of the general or special qualifications for filing an application or being admitted to an examination, nor any provision of these Rules and Regulations may be construed or applied as creating any vested, property, or other right or interest in any person to apply for, be examined for, or be appointed to any position in the Departments.

Section 10.8 Correction of Application.

A defective application will be returned to the applicant for correction, if the applicant otherwise is qualified for the position he or she seeks. A returned application must be resubmitted within the time period established by the Commission or its designated representative.

CHAPTER 11. EXAMINATIONS AND APPOINTMENTS FOR POSITION OF FIREFIGHTER/PARAMEDIC

Section 11.1 Firefighter/Paramedic Examination Elements; Grading.

A. Examination Elements. All applicants must submit themselves for each element of an entry-level examination at the times and places established by the Commission. An examination for an entry-level position will consist of the following elements and shall require the indicated minimum passing grade:

Examination Element		Minimum Passing Grade
Element 1.	Orientation.	~~Attendance Mandatory~~As required
Element 2.	Physical Ability Test:	Pass

Element 3. Written Test~~:~~ As provided in the Act

[See Subsection I of Section 11.2 below for timing of subsequent examination elements.]

Element 4. Preliminary Background Pass

Element ~~4~~5. Oral ~~Test~~Interview~~:~~ Pass

Element ~~5~~6. Character and Background Check Pass
~~& Polygraph: Pass~~

~~Element 6. Polygraph Test Pass~~

Element ~~7~~7. Psychological & Medical Tests~~Test:~~ Pass

~~Element 8. Medical Test: Pass~~

The Secretary of the Commission may rearrange the order for administering examination elements 2, 3, 4, 5, and ~~6~~6~~., and separately for examination elements 7 and 8.~~ The failure to achieve the minimum passing grade in any examination element disqualifies the applicant from any further participation.

B. Grading Generally. No information concerning grades and no test scores shall be disclosed or provided to any applicant until after the posting of an Initial Eligibility List or such other time as may be designated specifically by the Commission. The names of persons failing the examination need not be posted, published, or disclosed by the Commission except to such person. Each applicant shall be notified within a reasonable time of the result of his or her examination. All examination files and materials, if they are retained, shall be maintained as files of the Commission and not of the Fire Department. Such files shall be physically maintained in the location or locations designated by the Village Manager.

Section 11.2 Firefighter/Paramedic Element Descriptions and Procedures; Deferral.

A. Element One—Orientation. The Fire chief may schedule an orientation. If the Fire Chief schedules an orientation, ~~A~~all applicants must attend an orientation scheduled by the Fire Chief and conducted by persons designated by the Commission. The failure to attend the orientation will constitute failure of this examination element.

B. Element Two—Physical Ability Test. All applicants who attended the orientation must take a physical ability test. Only applicants who have participated and passed the designated test will be allowed to continue the process. Applicants who fail to achieve a passing grade on the physical ability test will be so notified.

The "Fire Fighter Candidate Physical Ability Test" (C.P.A.T.), developed and endorsed by the International Association of Fire Fighters and the International Association of Fire Chiefs, may be used for the physical ability test, as determined by the Commission. The Commission may make changes to the elements of the C.P.A.T. and supplement those elements with additional job-related elements.

See Subsection J of this Section below for re-administration of physical ability test.

C. Element Three—Written Test. All applicants who have successfully passed all prior elements of the examination must submit themselves for a written test.

1. Proof of Completion of Physical Ability Test; Valid Driver's License. Immediately before taking the written test, each applicant must present proof of successful completion of the physical ability test within the twelve-month time period immediately preceding the written test and must present a copy of his or her driver's license.

2. Procedure. The written test will be conducted and graded by two or more Commissioners or by a testing agency or service designated by the Commission, in a room or rooms designated by the Commission for that purpose at a Village facility or a testing agency's facility.

3. ~~3.~~ Finality. All test papers are the property of the Commission and any entity assisting the Commission with the test, and the grading thereof by the Commission shall be final and conclusive and not subject to review except only as provided by the Commission or the testing entity with the approval of the Commission.

D. Element Four—Preliminary Character and Background Check. At the request of the Secretary, the Village shall conduct a preliminary character and background investigation of each applicant who has successfully passed all prior elements of the examination. The investigation must review available data and information related to the applicant's compliance with the general qualifications and criteria for the rank of firefighter paramedic set out in these Rules and Regulations and such other data and information as are pertinent to a proper review and analyses of the applicant.

D. Element Five—Oral Interview. At the request of the Secretary of the Commission or their designee, ~~-~~selected shall submit themselves for an oral interview.

1. Procedure. The oral interview of each applicant will be conducted by individuals from the Human Resources Division of the Village Manager's Office, Fire department (as assigned by the Chief) and at least one Commissioner. The Interview will be administered to those applicants identified by the Secretary or their designee in the order of their standing after the written test and as outlined in Chapter 11.4A.~~-~~ At the end of the test of each applicant, the interviewers may discuss the merits of that applicant. Each interviewer must individually evaluate

Formatted: Font: 11.5 pt

Formatted: Font: 11.5 pt

Formatted: List Paragraph, Indent: Left: 0.75", First line: 0"

Formatted: List Paragraph, Numbered + Level: 1 + Numbering Style: A, B, C, … + Start at: 1 + Alignment: Left + Aligned at: 0.25" + Indent at: 0.75"

Formatted: Font: 11.5 pt

the applicant. The applicant's final evaluation will be the average of all the interviewers' evaluations. A passing score is defined as 70% or higher.

~~Element Four—Oral Test. All applicants who have successfully passed all prior elements of the examination must submit themselves for an oral test. Applicants who do not successfully complete the oral test will be notified and eliminated from all further consideration.~~

~~1. Procedure. The oral test of each applicant must be conducted by two or more Commissioners and, if desired by the Commission, a test facilitator. At the end of the test of each applicant, the examiners may discuss the merits of that applicant. Each examiner must individually grade the applicant as pass or fail. The Commission's final determination of whether the applicant has passed or failed may be computed only after the test has been administered to all applicants then being considered for appointment.~~

2. Subjects of Oral ~~Test~~Interview. Applicants will be asked questions that will enable the examiners to properly evaluate them on maturity, communication skills, judgment, leadership ability, managerial ability, appearance, demeanor, emotional stability, self-confidence, friendliness, interest in the position, personal fitness for the position, and such other matters as are pertinent to the proper review and analysis of an applicant. Each applicant for a particular examination must be asked questions in similar areas of inquiry so that the examiners can satisfactorily compare the merits of the applicants.

E. Element ~~Five~~Six—Detailed Character and Background Check and Polygraph. At the request of the Secretary of the Commission, the Village ~~the Police Department, and the Fire Department~~ if appropriate, shall conduct a detailed character and background check of an applicant for an entry-level position who has successfully passed all prior elements of the examination. The check shall review the applicant's employment history, references, educational background, credit history, litigation history, military record, driving record, neighborhood and community standing and service, and such other data and information pertinent to a proper review and analyses of the applicants. As a part of the detailed background check, applicants must submit to a polygraph device deceptive test, commonly known as a lie detector test, at a time and place designated by the Secretary of the Commission. Results of the polygraph test must be submitted to the Commission and HR Division of Village Manager's Office for its evaluation. An unsatisfactory result on the polygraph test may subject the applicant to disqualification or to additional testing, at the discretion of the Secretary of the Commission, including but not limited to an additional background and character check, an additional oral test, an additional polygraph test, or any combination of these tests.

F. ~~Element Six—Polygraph Test. When directed by the Commission, an applicant who has successfully passed all prior elements of the examination must submit to a polygraph device deceptive test, commonly known as a lie detector test, at a time and place designated by the Commission. An applicant will be considered to have~~

~~achieved an adverse result on the polygraph test if the Commission finds the applicant has been deceptive by (1) admitting in a pre-test interview wrongdoing that was not admitted in the applicant's application or in the course of the applicant's oral test before the Commission, or (2) admitting wrongdoing during the polygraph test that was not admitted in a pre-test interview, or (3) answering questions during the course of the polygraph test in a manner which the Commission determines to be indicative of deception. Results of the polygraph test must be submitted to the Commission for its evaluation. An unsatisfactory result on the polygraph test may subject the applicant to disqualification or to additional testing, at the discretion of the Commission, including but not limited to an additional background and character check, an additional oral test, an additional polygraph test, or any combination of these test.~~

G. Element Seven—Psychological & Medical Tests~~Test~~. When directed by the Secretary of the Commission or their designee and after a conditional offer of employment has been made, an applicant who has successfully passed all prior elements of the examination must submit to a psychological test to be given by a qualified examiners selected by the~~–~~ Village~~Commission~~. The test must be designed and administered solely to determine an applicant's suitability and fitness for the rank of firefighter/paramedic. The examiner shall prepare and submit a report of the examination to the Commission for its evaluation. The Commission shall determine, based on such report, whether the applicant passed the test, whether additional psychological testing is necessary, or whether the applicant failed the test.

~~H. Element Eight – Medical Test.~~ When directed by the Secretary of the Commission or their designee and after a conditional offer of employment has been made, an applicant who has successfully passed all prior elements of the examination must submit to a medical test, including without limitation a vision test and drug screening, by a licensed physician designated by the ~~Commission~~Village. The test must be designed and administered for the purpose of determining fitness for, and physical ability to perform, all of the duties of the position sought. A medical test must be completed not earlier than 180 days prior to the date of appointment. A positive result on a confirmatory drug screening test will be a sufficient basis for a determination by the Secretary of the Commission or their designee that an applicant has failed the medical test. At any point in the examination process, an applicant may be requested to submit evidence of vision sufficient to meet the standards of the Department to which he or she is applying or to submit to a vision examination to determine if his or her vision meets such standards. Each applicant shall be responsible for advising the Secretary of the Commission or their designee of any changes in his or her physical condition subsequent to the medical test. ~~The Commission may, at its discretion, require a~~An applicant may be required to submit to a follow-up medical test prior to appointment to a position.

I. Deferral of Examination Elements until Conditional Offer of Employment. Examination element~~s 7 and 8~~7 will not be administered until after the Initial Eligibility List is created, preference points are awarded, a Register of Eligibles has been created, and a conditional offer of employment has been made.

J. Re-administration of Physical Ability Test. If an applicant has been on the Register of Eligibles for more than one year after the date of his or her physical ability test and the applicant becomes eligible for a conditional offer of employment as a firefighter/paramedic, then the Commission may require that applicant to take a second physical ability test prior to being employed. If that applicant does not pass that second physical ability test, then the applicant may not be appointed but the applicant's name may be retained on the Register of Eligibles. If that applicant again becomes eligible for a conditional offer of employment as a firefighter/paramedic, then the Commission may require that applicant to take a third physical ability test prior to being employed. If that applicant does not pass that third physical ability test, then the applicant may not be appointed and the applicant's name must be stricken from the Register of Eligibles.

Section 11.3 Appointments of Firefighter/Paramedics.

A. Basis of Appointment; Notice. Appointments to the rank of firefighter/paramedic will be made in accordance with the Act. Promptly after ~~notification by the Fire Chief that~~ a vacancy exists in the rank of firefighter/paramedic and that the Village has authorized the filling of that vacancy, the Chief~~Commission~~ shall ~~undertake the process of appointing~~appoint to fill the vacancy the highest-ranked, qualified applicant on the Register of Eligibles ~~for that position~~ ~~to fill that vacancy~~. For each appointment, however, the Secretary of the Commission or their designee may take one of the following additional two actions:

1. If the Chief~~Commission~~ determines that the highest ranked applicant fails to meet the minimum standard for firefighter/paramedic, or if the Chief~~Commission~~ believes an alternate applicant would better serve the needs of the Fire Department, then the Chief~~Commission~~ may pass over the highest ranked applicant and may appoint either (a) any applicant who is ranked in the top five percent of all applicants on the Register of Eligibles or (b) any person who is among the top five highest ranked applicants on the Register of Eligibles if the number of applicants who have a ranking in the top five percent of all applicants on the Register of Eligibles is fewer than five people.

2. The Chief~~Commission~~, at their~~its~~ discretion, may fill a vacancy in the rank of firefighter/paramedic by appointing an applicant from the Register of Eligibles who has been awarded a certificate attesting to the applicant's successful completion of the Illinois EMT-P course and licensed as an Illinois EMT-P, ahead of applicants who have not achieved that certification and license.

The Secretary of the Commission or their designee will ~~cause~~ contact the chosen applicant to be notified of the appointment twice by telephone or e-mail over a three-work-day period. If the applicant does not respond within 24 hours after the

second notice, then the applicant will be deemed to have waived his or her right to the appointment.

B. Waiver of Appointment. An applicant, within ~~seven~~ three days after the date of notice from the Secretary of the Commission ~~-~~of a conditional offer of appointment or an appointment, may waive the right to that appointment. That request must be made in writing, signed by the applicant. If the Secretary of the Commission receives a proper notice of waiver, then the Secretary of the Commission shall retain the name of the applicant on the Register of Eligibles until the next opportunity for an appointment and shall fill the current vacancy (or vacancies, if more than one appointment is being made at that time) pursuant to the procedures of Subsection A of this Section. If no notice of waiver or response to the notice of appointment is received within the prescribed time, then the Secretary of the Commission shall strike the applicant's name from the Register of Eligibles pursuant to Subsection 9.6A of these Rules and Regulations and shall fill the vacancy pursuant to Subsection A of this Section. No applicant may be allowed more than one waiver.

In the event of a subsequent vacancy to be filled from the Register of Eligibles, and the applicant is chosen by the Commission, the Commission will cause the applicant to be notified twice by telephone or e-mail over a three-work-day period. If the applicant does not respond within 24 hours after the second notice, then the applicant will be removed from the Register of Eligibles.

C. Certificate of Appointment. After appointment to an entry-level position in the Fire Department, the new firefighter/paramedic will receive a Certificate of Appointment signed by the Chief~~Chairperson~~ ~~-~~and Secretary of the Commission.

D. Oath of Office and Bond. Before entering into duty, the new firefighter/paramedic must take such oath and enter into such bond as provided by the Illinois law and Village ordinances.

Section 11.4 Fire Department Probation.

A. Probation Generally. Each person appointed to as a firefighter/paramedic will be on probation for a period of 12 months. Time spent as follows will not count toward the required 12 months of probation: (1) approved leave in excess of a cumulative total of 30 days and (2) time spent outside of the Fire Department and Village attending a fire training academy. The inability of any appointee to successfully complete the courses or the certification examination process for Emergency Medical Technician/Paramedic will be grounds for dismissal and the appointee may be discharged without any hearing for failure to meet the requirements.

B. No Rights. During his or her probationary period, the firefighter/paramedic will be deemed not to have any vested, property, or other right or interest in his or her employment with the Village, and nothing in this Section or in any other provision of these Rules and Regulations may be construed or applied to create any such right or interest.

C. Dismissal. During his or her probationary period, the firefighter/paramedic may be dismissed- by the Chief with the approval of the Village Manager's Office~~at any time by the Commission, without prior notice or hearing, on the recommendation of the Fire Chief stating that, in the~~ If in the Chief's opinion, it is not in the best interest of the Fire Department to continue the employment of that firefighter/paramedic. ~~That recommendation must include a report setting forth the Fire Chief's evaluation of the appointee and the circumstances of the recommendation. That report will be confidential and need not be made available to the firefighter/paramedic. The decision of the Commission shall be final.~~

D. Suspension. During a probationary period, the Fire Chief with the approval of the ~~Human Resources Director~~Village Manager's Office or designee may suspend an appointee without pay~~ for a period not exceeding five days~~, except that no suspension may be imposed without first giving the firefighter/paramedic written notice thereof setting forth the basis therefor and advising the firefighter/paramedic of his or her opportunity to be heard by the Chief or his or her designee concerning the relevant facts and circumstances.

E. Disciplinary Provisions Not Applicable. The provisions of Chapter 15 of these Rules and Regulations do not apply to the dismissal or suspension of a probationary firefighter/paramedic. Nothing in this Section 11.4 may be construed to alter the application of, or to limit the effect of, the provisions of the Firemen's Disciplinary Act, 50 ILCS 745/1 *et seq*., when applicable to the investigation of misconduct of any firefighter/paramedic.

CHAPTER 12. APPLICATIONS FOR FIRE DEPARTMENT PROMOTIONAL POSITIONS

Section 12.1 Filing of Application.

An application for a promotional position in the Fire Department must be filed with the Commission on an approved form. No application will be accepted until notice of an examination for a position has been given or has been waived in accordance with Section 2.2 of these Rules and Regulations. Also, no application will be accepted less than two weeks prior to the date of an examination. The Commission shall cause each application to be noted with the date and hour it was received, which time shall determine the timeliness and priority of filing.

Section 12.2 Special Standards.

A. General Authority. The Commission may set particular standards for eligibility for a promotional position if the Commission determines that the position requires special qualifications.

B. Minimum Fire Department Experience. Every applicant for a promotional position in the Fire Department must have not less than three years' experience

as a permanent, sworn member of the Fire Department at the time of filing his or her application.

Section 12.3 Disqualification.

A. Grounds. The Commission may refuse to examine, or after examination refuse to certify as eligible, or after certification as eligible refuse to retain on the Register of Eligibles, any applicant:

1. who is on probationary status; or

2. who is found lacking in any of the established general requirements stated in Section 10.1 of these Rules and Regulations or the special standards stated in Section 12.2 of these Rules and Regulations or established by the Commission; or

3. who is a user of narcotics or other non-prescription drugs, or a habitual user of intoxicating beverages; is a gambler; or is not a person of good character; or

4. who has been convicted of a felony, a crime of moral turpitude, or a misdemeanor specifically listed in 65 ILCS 5/10-2.1-6 as amended from time to time; or

5. who has been shown to have attempted to practice any dishonesty, deception, or fraud in his or her application, examination, or other submissions to or dealings with the Commission, the Fire Department, or the Village; or

6. who has failed to abide by the rules and procedures governing any aspect of the application process; or

7. who is physically or mentally unable to perform the duties of the position to which he or she seeks appointment; or

8. who has been dismissed from any public service for good cause; or

9. whose character or employment references are unsatisfactory; or

10. who has applied for a position in the Fire Department and is, or has been, classified as a conscientious objector; or

11. who does not have a valid automobile driver's license; or

12. who does not satisfy the requirements of the job description published by the Village for the position for which he or she is applying.

B. Notification. – Any applicant who has been disqualified will receive notice from the Commission of the disqualification.

Section 12.4 Release of Liability.

In consideration of being admitted to the examination process, all applicants shall execute and deliver to the Commission or its designated representative a release of all liability as a result of participating in the examinations, and all waivers and releases of information necessary to allow the Commission to complete all elements of the examinations, on forms approved by the Commission.

Section 12.5 Admission to Examination.

No person shall knowingly be admitted to any element of any examination who does not meet the minimum qualifications fixed for the position sought. The fact that a person is admitted to an element of an examination shall not be considered as evidence that he or she is qualified or eligible for the position.

Section 12.6 No Creation of Applicant Right or Interest.

Neither the filing of an application, nor the acceptance of an application, nor an applicant's satisfaction of the general or special qualifications for filing an application or being admitted to an examination, nor any provision of these Rules and Regulations shall be construed as creating any vested, property, or other right or interest in any person to apply for, be examined for, or be appointed to any position in the Departments.

Section 12.7 Correction of Applications.

A defective application will be returned to the applicant for correction, if the applicant otherwise is qualified for the position he or she seeks. All returned applications must be resubmitted with the time period established by the Commission or its designated representative.

CHAPTER 13. FIRE DEPARTMENT PROMOTIONAL EXAMINATIONS AND APPOINTMENTS

Section 13.1 Fire Department Promotional Examination Elements; Grading.

A. Examination Elements. All applicants must submit themselves for each element of a promotional examination at the times and places established by the Commission. An examination for a promotional position will consist of the following elements and will require the indicated minimum passing grade:

Lieutenant Examination Element		Percent of Total Score
Element 1.	Seniority:	10 percent

Element 3.	Written Test:	30 percent
Element 4.	Oral Test:	10 percent
Element 5.	Chief's Merit Rating:	10 percent
Element 6.	Officer Evaluation	10 percent
Element 7.	Assessment Center	30 percent
Total Possible Score:		100 percent
Minimum Required Score:		75 percent

The scoring set forth in this Subsection does not include adjustments for military preferences.

Captain Examination Element		Percent of Total Score
Element 1.	Seniority:	10 percent
Element 2.	Written Test:	20 percent
Element 4.	Chief's Merit Rating:	20 percent
Element 5.	Officer Evaluation	10 percent
Element 6.	Assessment Center	40 percent
Total Possible Score:		100 percent
Minimum Required Score:		70 percent

The scoring set forth in this Subsection does not include adjustments for military preferences.

B. Grading Generally. Each applicant's score will be calculated based on the percentages attributed to Elements 1, 3, 4, 5, 6, and 7. The following process will be used to calculate the final score for an examination element:

- First, the points achieved for the examination element shall be expressed as a percentage of the total points possible for that element.
- Second, that percentage shall be multiplied by 100.

- Third, that product shall be multiplied by the Percent of Total Score in Subsection 7.1A to yield the final score for that element.

For example, the achievement of 129 points for a 150-point written test results in a final score for that test element of 21.5 points, derived as follows: 129 points *equals* 86 percent of 150 possible points; 86 percent *multiplied by* 100 *equals* 86; 86 *multiplied by* 25 percent (the Percent of Total Score for the written test) *equals* 21.5 points.

No information concerning grades and no test scores will be disclosed or provided to any applicant until after the posting of an Initial Eligibility List or such other time as may be designated specifically by the Commission. The names of persons failing the examination need not be posted, published, or disclosed by the Commission except to such person. Each applicant will be notified within a reasonable time of the result of his or her examination.

C. Method of Filling Vacancies. A vacancy in a promotional rank will be filled by promotion when practical. An examination for a promotional position will be competitive among the qualified members of the next lower rank who desire to submit themselves to the examination. 65 ILCS 5/10-2.1-11 and 10-2.1-15.

Section 13.2 Fire Department Promotional Examination Element Descriptions and Procedures.

A. Element One—Seniority. The Commission shall award to each applicant for a promotional position 1/12 of 1 point for full months of service within the Fire Department Lieutenant promotional points are calculated starting at 24 months after hire. Captain promotional points are calculated starting at 48 months after hire.

The maximum number of points that can be awarded for seniority is 10 points after 144 months of service for Lieutenant or 168 months of service for Captain.

B.

C. Element Three—Written Test. All applicants for a promotional position shall submit themselves for a written test.

1. Procedure. The written test for a promotional position shall be conducted and graded by a testing agency or service designated by the Commission.

2. Finality. All test papers are the property of the Commission and any entity assisting the Commission with the test, and the grading thereof by the Commission shall be final and conclusive and not subject to review by any other board or tribunal of any kind or description.

D. Element Four—Oral Test. All applicants for a promotional position shall submit themselves for an oral test.

1. Written Statement. Each applicant shall submit, prior to the deadline established by the Commission, a written statement containing the reasons he or she should be selected for the promotional position for which he or she has applied. The statement should describe the applicant's qualifications for the position, including any items which he or she feels have prepared him or her for the position, any pertinent community service he or she has performed, and any other matters reflecting a commitment to Village community and to the Fire Department.

2. Oral Test. The Commission shall conduct the oral test. The Commission shall discuss the merits of each applicant tested and shall grade the applicant.

3. Subjects of Oral Test. Applicants shall be asked questions that will enable the examiners to properly evaluate and grade them on maturity, communication skills, judgment, leadership ability, managerial ability, appearance, demeanor, emotional stability, self-confidence, friendliness, interest in the position, personal fitness for the position, and such other matters as are pertinent to the proper review and analysis of an applicant. Each applicant for a particular examination shall be asked questions in similar areas of inquiry so that the examiners can satisfactorily compare the merits of the applicants.

E. Element Five—Chief's Merit Rating. The Fire Chief shall provide the Commission with his or her rating score of each applicant for the promotional position. Such rating shall be in a form determined by the Chief to be appropriate to judge the qualifications of the applicant individually and relative to the other applicants. The Commission shall add the Chief's merit rating score to each applicant's scores on the other elements of the examination.

F. Element Six—Superior Office Evaluation. All Fire Department officers superior in rank to the applicants shall evaluate each applicant for the promotional position and provide the Commission with their combined rating score of each applicant for the promotional position. Such rating shall be in a form determined by the superior officers to be appropriate to judge the qualifications of the applicant individually and relative to the other applicants. The Commission shall add the Superior Officer Evaluation rating score to each applicant's scores on the other elements of the examination.

G. Element Seven—Assessment Center. All applicants for the promotional position shall submit themselves for evaluation at an assessment center designated by the Village, with elements approved by the Village designed to judge the qualifications of the applicants. The Commission shall add the results provided by the assessment center to each applicant's scores on the other elements of the examination.

Section 13.3 Fire Department Promotional Appointments.

A. Basis of Appointment. Appointments to a promotional position for which a Register of Eligibles has been established shall be made in accordance with the Act. Promptly after notification by the Secretary that a vacancy exists in a promotional rank, the Commission shall appoint to fill the vacancy the person with the highest ranking on the final promotion list for that rank, except that the Commission shall have the right to pass over that person and appoint the next highest ranked person on the list if the Commission has reason to conclude that the highest ranking person has demonstrated substantial shortcomings in work performance or has engaged in misconduct affecting the person's ability to perform the duties of the promoted rank since the posting of the promotion list. If the highest ranking person is passed over, the Commission shall document its reasons for its decision to select the next highest ranking person on the list. Unless the reasons for passing over the highest ranking person are not remediable, no person who is the highest ranking person on the list at the time of the vacancy shall be passed over more than once. 50 ILCS 742/20

B. Waiver of Appointment. Any candidate may refuse a promotion once without losing his or her position on the final adjusted promotion list. Any candidate who refuses promotion a second time shall be removed from the final adjusted promotion list, provided that such action shall not prejudice a person's opportunities to participate in future promotion examinations.

CHAPTER 14. FIRE DEPARTMENT TEMPORARY APPOINTMENTS AND VOLUNTARY DEMOTIONS

Section 14.1 Fire Department Temporary Appointments.

The Commission, at the request of the Village Board and without complying with the provisions of these Rules and Regulations otherwise applicable to appointments, shall make temporary appointments to the Fire Department to prevent a stoppage of public business, to meet extraordinary situations, or to prevent the material impairment of the Fire Department's ability to carry out its functions. Temporary appointments may not be made to exceed 180 days and no person may receive a temporary appointment more than twice in any calendar year. 65 ILCS 5/10-2.1-16.

Section 14.2 Fire Department Voluntary Demotions.

Any member of the Fire Department may request a demotion to a lower rank, subject to the approval of the Commission. Demotion will result in a reduction in compensation to a rate not exceeding the maximum rate of the lower rank.

ARTICLE IV: DISCIPLINE

CHAPTER 15. SUSPENSIONS, REMOVALS, DEMOTIONS, AND DISCHARGES

Section 15.1 Collective Bargaining Agreements; Just Cause Required.

A. Collective Bargaining Agreements. The provisions of current, valid bargaining agreements between the Village and members of the Fire Department or Police Department shall apply to suspension, removal, discharge, or demotion.

B. Just Cause Required. Except as provided in Section 158 of this Chapter, no member of the Fire Department or Police Department shall be suspended, removed, discharged, or demoted except for just cause.

Section 15.2 Suspensions; Appeals.

A. Suspensions. The Fire Chief or Police Chief shall have the right to suspend any member of the Fire Department or Police Department for a period not exceeding five days without pay by serving a written notice of suspension on such member that sets out the facts constituting just cause for suspension. Any member so suspended may appeal the suspension to the Commission by filing notice of appeal within five days after service of written notice of such suspension, regardless of when the suspension is to be served. A hearing shall be held on appeal, in accordance with the provisions of Sections 15.4, 15.5, and 15.6 of this Chapter, except that the member so suspended shall have the burden of establishing by clear and convincing evidence that just cause for the suspension does not exist.

B. Appeal. On such appeal, the Commission shall review the action of the Fire Chief or Police Chief to determine if just cause exists in light of all the evidence presented. The Commission may sustain the action of the Fire Chief or Police Chief, may reverse the action of the Fire Chief or Police Chief with instructions that the member so suspended shall receive his or her pay for the period involved, may suspend the member for a period of not more than 30 days, or may discharge the member, depending on the evidence presented.

Section 15.3 Charges.

A. Complainant. Charges may be brought against a member by the Fire Chief, the Police Chief, or the Village Manager.

B. Charges. Charges shall be in writing, shall be signed by the complainant, and shall state with specificity the facts alleged to constitute just cause for suspension, removal, discharge, or demotion. Such charges shall be filed with the Commission and shall be served upon the respondent.

Section 15.4 Pre-Hearing Procedures.

A. Hearing Date. Upon the filing of a charge, the Commission shall set the date, time, and place for hearing, which hearing date shall be within 30 days after the filing date.

B. Notice of Hearing. The Commission shall cause notice of hearing to be served on the parties promptly and not less than five days prior to the hearing date.

C. Answer. The respondent may file a written answer to the charges. Such written answer shall be signed by the respondent, shall be filed with the Commission, and shall be served on the complainant not less than 48 hours prior to the hearing.

D. Reply. The complainant may reply to any affirmative matter contained in such answer by signing, filing, and serving such reply not less than eight hours prior to the hearing.

E. Continuance. Motions for continuance of the hearing made by either party shall be in writing and shall be filed with the Commission and served on the opposing party not less than 48 hours prior to the time set for hearing. The Commission may waive said requirements upon good cause being shown and a finding that no prejudice will result to any party from any such waiver. The Commission may grant or deny a continuance on the motion of either party or on its own motion, but no continuance that extends the commencement of the hearing beyond 30 days from the filing date shall be granted. If a continuance is granted on the motion of a respondent who has been suspended by the Commission, with or without pay, pursuant to Subsection I of this Section and said continuance causes postponement of the conclusion of the hearing to a date more than 30 days after the date on which charges were filed, a waiver of pay shall be required for the period beginning with the 31st day after such filing and continuing to the date of the conclusion of the hearing.

F. Attendance of Witnesses. Either party, at any time prior to the hearing, may file applications with the Commission for the issuance of subpoenas for any person or persons to appear at the hearing, or to have any such person produce books, papers, records, accounts, and other documents at the hearing. Such application shall be in writing and shall adequately identify such person, persons, or documents sought to be subpoenaed. The Commission, or any Commissioner, shall issue such subpoenas if the Commission deems the testimony of such person or such documents to be relevant to the hearing. Such subpoenas may be authorized either by resolution at a Commission meeting or by the signature of any two Commissioners without a meeting. Subpoenas may be served by any person of the age of 21 years or more.

G. Evidence Depositions. Evidence depositions may be taken and utilized in the manner and under the conditions prescribed therefor in courts of general jurisdiction in the State of Illinois.

H. Stipulations. The parties may stipulate and agree in writing, or on the record, as to evidentiary facts or other matters. Any facts so stipulated shall be considered as evidence in the proceeding.

I. Suspension Before Hearing. The Commission may suspend the respondent pending hearing, with pay or without pay, for not more than 30 days. In the event that the Commission, after hearing, determines that the charges are not sustained, the respondent shall receive any pay withheld during the suspension period.

Section 15.5 Hearing.

A. Commencement and Adjournment. A hearing shall be commenced within 30 days after the filing of the charges and may be adjourned from time to time thereafter for lack of a quorum or in order to complete the hearing at a later date.

B. Quorum to Conduct Hearing. Two Commissioners shall constitute a quorum of the Commission for the conducting of a hearing.

C. Public Hearings and Closed Hearings. All disciplinary hearings of the Commission shall be held in accordance with the Illinois Open Meetings Act. The hearing shall be public, but at any time before or during such hearing the Commission may determine that such hearing, or any portion of such hearing (except for final action), shall be closed.

D. Counsel. The respondent may, at his or her election, be represented by any attorney at law licensed to practice law in the State of Illinois. Such attorney shall file and serve his or her appearance with the Commission.

E. Oath. All witnesses shall be sworn under oath prior to testifying. The oath may be administered by any member of the Commission or an Illinois notary public.

F. Order of Proceedings; Cross Examination. After disposition of any preliminary motions for continuance, motions directed to the charges, or other motions, the complainant shall present and examine witnesses and offer other evidence substantiating the charges that have been made against the respondent. Thereafter the respondent may present and examine witnesses and offer other evidence refuting the charges. Complainant may then present evidence in rebuttal. All parties shall have the right to cross examine witnesses presented by the opposite party.

G. Rules of Evidence.

1. Irrelevant, immaterial, or unduly repetitious evidence shall be excluded. The rules of evidence, as applied in civil cases in Illinois, shall be followed; provided, however, that when necessary to ascertain facts not reasonably susceptible of proof under those rules, evidence not admissible thereunder may be admitted (except where precluded by statute) if it is of a type

commonly relied upon by reasonably prudent persons in the conduct of their affairs. The Commission shall give effect to the rules of privilege recognized by law. Objections to evidentiary offers may be made by either party and must be ruled on by the Commission. Such objections and rulings shall be noted in the record. Subject to these requirements, when a hearing is expedited and the interests of parties will not be prejudiced substantially, any part of the evidence may be received in written form.

2. Documentary evidence may be received in the form of copies or excerpts, if the original is not readily available.

3. The Commission may take notice of judicially cognizable facts.

H. Burden of Proof. Except as provided in Subsection 9.2B of these Rules and Regulations, the complainant shall have the burden of proving the charges brought by the clear and convincing evidence.

I. Argument. The Commission shall permit opening statements and closing arguments, first on behalf of complainant, next on behalf of respondent, and finally on behalf of complainant, within time limits to be established by the Commission in each case.

J. Record of Proceedings. The Commission shall make an audio recording of the hearing. That recording must be made available to any party for review or transcription at that party's expense. The Commission or any party may provide, in addition, for a transcript of the hearing to be taken by a reporter, in which event the Commission's audio recording will not be required. The transcript may be written at the request of the Commission or any party, at the expense of the requester.

Section 15.6 Findings and Decision.

A. Vote; Deliberations. To reach a finding of guilty on charges brought pursuant to Section 9.3 of these Rules and Regulations, at least two Commissioners must vote guilty. A vote of guilty as to a charge by less than two Commissioners constitutes a finding of not guilty. To reverse a suspension appealed to the Commission pursuant to Section 9.2 of these Rules and Regulations, at least two Commissioners must vote to reverse. The Commission may deliberate in public or in closed session, provided that final action shall be taken only in public session.

B. Finding of Not Guilty. If the respondent is found not guilty as to each and every charge, or if a suspension is reversed, then the Commission shall make a finding that the charges or suspension are not sustained and shall enter an order terminating immediately any suspension and requiring the Fire Department or Police Department to reimburse respondent for all wages not paid to the respondent during such suspension period.

C. Finding of Guilty. If the Commission finds that charges have been proved by clear and convincing evidence and that just cause exists and the Commission thus finds

the respondent guilty of any one or more charges, or if the Commission denies the appeal of a suspension, then the Commission shall adopt findings of fact in support of such determination. The Commission may order the discharge and removal of the respondent from office immediately; may order the suspension of the respondent from office, with or without pay, for a period of not more than 30 days, including any period of suspension, with or without pay, by the Fire Chief, Police Chief, or the Commission prior to such finding; may demote the respondent previously promoted from a lower rank with immediate reduction in compensation to a rate not exceeding the maximum rate of such lower rank; or any combination of the above. 65 ILCS 5/10-2.1-17.

D. Notice of Findings and Decisions. The Commission shall promptly serve notice on the parties of its findings and decision.

E. Rehearing. Such findings and decision of the Commission shall be final and not subject to rehearing.

Section 15.7 Administrative Review.

Either party may file a complaint for review of a final decision by the Commission in accordance with the provisions governing administrative review in Article III of the Illinois Code of Civil Procedure, 735 ILCS 5/3-101 *et seq*. Such complaint shall be filed within 35 days after the date of service of a copy of said decision on the parties affected thereby.

Section 15.8 No Applicability To Probationary Employees.

The provisions of this Chapter 15 do not apply to Department personnel who are on probation pursuant to Sections 5.4 or 11.4 of these Rules and Regulations.

ARTICLE V: DEFINITIONS AND GRAMMAR

CHAPTER 16. DEFINITIONS AND GRAMMAR

Section 16.1 General Definitions.

For the purposes of these Rules and Regulations, the following terms shall have the meanings herein ascribed to them:

A. Act. The Illinois Board of Fire and Police Commissioners Act, 65 ILCS 5/10-2.1-1 through 5/10-2.1-30, as amended from time to time.

B. Banding. The process by which written examination scores for entry-level positions are divided by the Commission or its designee into groups or clusters of applicants pursuant to Subsection 5.2D of these Rules and Regulations. Each of these groups is known as a "band."

C. Board of Trustees. The Board of Trustees of the Village of Northbrook, Illinois.

D. Charge. A written statement alleging just cause against the respondent for suspension, removal, discharge or demotion.

E. Clear and Convincing Evidence. That evidence which, when fairly considered, produces an abiding conviction that the truth of the factual contentions is highly probable.

F. Code. The Northbrook Municipal Code (1988), as amended.

G. Commission. The Board of Fire and Police Commissioners of the Village.

H. Complainant. The person who files a charge under this Chapter.

I. Day. One calendar day.

J. Departments. The Fire Department and the Police Department.

K. Filing. Presenting a document to the Commission by delivery to the Secretary personally, or by delivery to the Office of the Village Manager addressed to the attention of the Commission, or by mailing by regular mail to the office of the Commission. In the case of filing by mail, the date of filing shall be deemed to be the second day following the date of mailing, unless said second day be a Saturday, Sunday, or federal or state legal holiday, in which event the date of filing shall be the first regular business day following said Saturday, Sunday, or legal holiday.

L. Fire Chief. The Chief of the Fire Department.

M. Fire Department. The Fire Department of the Village.

N. Just Cause. Some substantial shortcoming on the part of a member of the Fire Department or Police Department that renders his or her continued employment in the Fire Department or Police Department in some way detrimental to the discipline and efficiency of the public service rendered by the Fire Department or Police Department and something that the law and sound public opinion recognize as cause for the member to no longer occupy his or her position. Without in any manner limiting the foregoing, "just cause" shall include but not be limited to the following:

1. the existence of, or discovery of, any fact that would have required disqualification from original appointment; or

2. non-disclosure of any fact that, if disclosed, would have constituted a ground for disqualification from original appointment; or

3. the making of a false statement, oral or written, of a material fact in connection with original appointment that could have substantially affected the decision to appoint the applicant; or

4. an act or occurrence, after appointment, that would have required disqualification from original appointment, or could have constituted ground for disqualification from original appointment; or

5. any violation of any federal, state, or municipal law affecting the member's ability or qualifications to continue in the performance of his or her duties; or

6. incompetence, nonfeasance, misfeasance, or malfeasance in office; or

7. failure to maintain required certifications or licenses for the position held; or

8. failure to qualify for the pension fund for the Department in which he holds a position; or

9. violation of a rule or regulation of the Fire Department or Police Department.

O. Managerial Positions. All persons appointed by the Fire Chief above the rank of Lieutenant pursuant to Section 12-31(b) of the Code and all persons appointed by the Police Chief above the rank of Sergeant pursuant to Section 20-21(c) of the Code.

P. Member. Any person holding a permanent, sworn position in the Fire Department or the Police Department, except the Fire Chief and the Police Chief and the Managerial Positions.

Q. Officer. Any person holding a permanent office in the Police Department or Fire Department except as otherwise specifically set forth herein.

R. Open Meetings Act. The Illinois Open Meetings Act, 5 ILCS 120/1 *et seq.*

S. Parties. The complainant and the respondent.

T. Police Chief. The Chief of the Police Department.

U. Police Department. The Police Department of the Village.

V. Respondent. A member of the Fire Department or Police Department against whom a charge is filed.

W. Rules and Regulations. These Rules and Regulations of the Commission.

X. Secretary. The Secretary of the Commission or a person designated by the Secretary to perform some or all of the administrative and clerical duties of the Secretary.

Y. Service. The presentation by a party to the other party, or by the Commission to a party, of any document by personal delivery to the other party or by mailing by United States mail in an envelope properly addressed, with postage prepaid, to the last known address of such other party, together with a written certificate of service. In the case of service by mail, the date of service shall be deemed to be the second day following the date of mailing, unless said second day be a Saturday, Sunday, or federal or state legal holiday, in which event the date of service shall be the first regular business day following said Saturday, Sunday, or legal holiday.

Z. Village. The Village of Northbrook, Illinois.

AA. Village Board. The Board of Trustees of the Village of Northbrook, Illinois.

BB. Village Manager. The Village Manager of the Village.

CC. Village President. The Village President of the Village.

Section 16.2 Grammar Rules.

Throughout these Rules and Regulations, all nouns and pronouns shall include ~~all~~ genders and all forms of words shall include both singular and plural meanings.

MEMORANDUM

To: Village Board of Trustees
From: Village Manager Cara Pavlicek
Date: 2026-07-14
Subject: A Resolution Authorizing and Approving the Appointment of Certain Special Counsel

Overview

The Village desires to engage Clark Baird Smith LLP to serve as Special Counsel to the Village Board regarding an employment law matter.

Fiscal Impact

Annually the Village appropriates funding for in the General Fund for Legal Services including General Counsel, Labor Counsel, and Prosecutorial Services.

Recommendation

Approval.

Strategic Priority

Organizational Excellence. Foster a high-performing, supportive, and innovative culture where everyone contributes to the delivery of exceptional services for both internal and external customers.

Background

The Village desires to engage Clark Baird Smith LLP to serve as Special Counsel to the Village Board regarding an employment law matter. Clark Baird Smith LLP has provided the Village with an engagement letter, which includes Terms of Engagement for Legal Services, which is attached to the Resolution as Exhibit A.

A Resolution Approving An Engagement Letter with Clark Baird Smith LLP for Special Counsel Services.docx
Engagement Letter - Northbrook 2026.docx

Resolution 2026-__

BE IT RESOLVED by the President and Board of Trustees of the Village of Northbrook, County of Cook and State of Illinois, THAT:

A Resolution Approving An Engagement with Clark Baird Smith LLP for Special Counsel Services

is hereby adopted, as follows:

Section 1. RECITALS.

The Village of Northbrook ("***Village***") is a home rule municipality in accordance with Article VII, Section 6 of the Constitution of the State of Illinois of 1970.

The Village desires to engage Clark Baird Smith LLP to serve as Special Counsel to the Village Board regarding an employment law matter.

Clark Baird Smith LLP has provided the Village with an engagement letter, which includes Terms of Engagement for Legal Services ("***Engagement Letter***").

The President and the Board of Trustees have considered the Engagement Letter and determined that it is in the best interests of the Village and the public to approve the Engagement Letter. These matters pertain to the Village's government and affairs and are approved pursuant to the Village's home rule powers under the Illinois Constitution of 1970.

Section 2. APPROVAL OF ENGAGEMENT LETTER.

The Engagement Letter between the Village and Clark Baird Smith LLP shall be, and is hereby, approved in substantially the form attached hereto as ***Exhibit A***.

Section 3. EXECUTION OF ENGAGEMENT LETTER.

The Village President and Village Clerk are hereby authorized and directed to execute and seal, on behalf of the Village, the Engagement Letter on behalf of the Village.

Section 4. EFFECTIVE DATE.

The approval of this Resolution shall be in full force and effect following its passage by the Board of Trustees in the manner provided by law.

Adopted:

RESULT:
MOVER:
SECONDER:
AYES:
ABSTAIN:
ABSENT:
AWAY:

ATTEST:

_____
Village President

_____
Village Clerk

EXHIBIT A

Engagement Letter

CLARK BAIRD SMITH LLP
ATTORNEYS AT LAW
9550 W. HIGGINS ROAD, SUITE 600, ROSEMONT, IL 60018
847.378.7700 OFFICE • 847.378.7070 FAX

DDN: 847-378-7108
bgehrt@cbslawyers.com

June 23, 2026

Kathryn L. Ciesla
Village President
Village of Northbrook
1225 Cedar Lane
Northbrook, IL 60062
Via email: kathryn.ciesla@northbrook.il.us

Re: Village of Northbrook

Dear Ms. Ciesla:

You have asked Clark Baird Smith LLP to provide legal advice to the Village of Northbrook (the "Village") to serve as Special Counsel to the Village Board regarding an employment law matter. Clark Baird Smith LLP would be pleased to provide these services. This letter, along with the attached Terms of Engagement for Legal Services, shall serve as our agreement with respect to our services. The Terms set forth additional details concerning our engagement and further explain our billing practices.

It is expected that I will be your primary contact person at the firm, although we may utilize other attorneys and staff members at the firm to assist us in representing the Village, and you may certainly contact any of our attorneys directly if the need arises. Unless otherwise agreed in a specific instance, we will bill the Village based upon the time we spend rendering our services. We normally bill on a monthly basis, so that you will see the extent of the legal fees and disbursements as they are incurred. Our 2026 public sector billing rates for Firm partners currently range from $345 to $385 per hour. The rate of our associate attorneys ranges from $195 to $285 per hour. The paralegal rate is $140 per hour and the law clerk rate is $105 per hour.

To evidence concurrence with the scope of services to be rendered, the arrangements for billing and payment of fees and expenses, and our Terms of Engagement for Legal Services, please return a signed copy of this letter to the undersigned. If there are any questions at any time about our billing practices or a fee or cash disbursement or any other aspect of our legal services, please bring it to my attention as soon as possible.

We sincerely appreciate the opportunity to represent the Village and will always endeavor to provide prompt and responsive legal services.

Very truly yours,

CLARK BAIRD SMITH LLP

By: /s/ Benjmain E. Gehrt

BEG/jmf

Enclosure

THE VILLAGE OF NORTHBROOK UNDERSTANDS AND AGREES TO THE TERMS OF THIS ENGAGEMENT LETTER AND THE ATTACHED TERMS OF ENGAGEMENT FOR LEGAL SERVICES.

By_____ _____
Kathryn Ciesla, Village President Date

CLARK BAIRD SMITH LLP
ATTORNEYS AT LAW
9550 W. HIGGINS ROAD, SUITE 600, ROSEMONT, IL 60018
847.378.7700 OFFICE • 847.378.7070 FAX

TERMS OF ENGAGEMENT FOR LEGAL SERVICES

The following is an explanation of the basis on which Clark Baird Smith LLP bills for its services and the expenses and advances incurred on behalf of its clients, and details various practices and policies at the Firm which govern the relationship between Clark Baird Smith LLP, and its clients. Unless modified in writing by mutual agreement, these terms will be an integral part of our agreement with you. Therefore, we ask that you review this statement carefully and contact us promptly if you have any questions.

BILLING ARRANGEMENTS, FEES AND TERMS OF PAYMENT

We normally submit invoices to our clients monthly during our engagement unless otherwise agreed. This procedure ensures that our clients have a current understanding of our charges and can intelligently budget legal expenses. Invoices are usually most influenced by the amount of time expended and the current hourly billing rates of the lawyers involved in the matter. Each invoice is ordinarily reviewed by the attorney who has primary billing responsibility for that client prior to its submission to the client for payment. The attorney reviews the time recorded to the client's account since the last billing. The purpose of the review is to determine whether the invoice should be calculated solely based on the time recorded or should be adjusted according to the circumstances.

We will keep accurate records of the time we devote to your work, including conferences (both in person and over the telephone), negotiations, factual and legal research and analysis, document preparation and revision, and other related matters. Normally we record our time in units of one quarter of an hour. The currently hourly billing rates of attorneys and paralegals in our Firm for matters such as this are as follows: The hourly billing rate for Partners ranges from $345 to $385 per hour; the associate attorney rate range is $195 to $285 per hour; the paralegal rate is $140 per hour; and the law clerk rate is $105 per hour. Typically, the more experience an individual has, the higher the hourly rate. Ordinarily, we review and adjust our billing rates annually to reflect current levels of legal experience, changes in overhead costs, and other factors. Changes in rates will be reflected in the monthly invoices.

Clients are also billed for direct expenses incurred in connection with handling their matters, such as special mail services, messenger and overnight delivery services; for advances incurred on behalf of a client such as filing fees, court reporters, arbitrators, consulting fees, printing, computerized legal research and travel expenses; and for items purchased and used exclusively in connection with a particular client's matters. Where significant advances are involved, we may request that the client pay the costs directly.

We are often requested to estimate the amount of fees and costs likely to be incurred in connection with a matter. Whenever possible, we will furnish such an estimate based upon our professional judgment, but always with a clear understanding that it is not a maximum or fixed-fee quotation unless a fixed-fee is specifically negotiated. The ultimate cost may be more than the amount estimated.

We ask and expect payment of our invoices within thirty (30) days of the date of the invoice since delayed payment adds to our overall costs of providing services. In addition, we reserve the right to discontinue performance and to withdraw as your attorneys, regardless of the status of any matter in which we may be involved and subject to only our ethical obligations if any invoice remains unpaid for more than ninety (90) days after the date of the invoice.

It is always of the utmost importance for us to know that you are satisfied with the legal services being provided by Clark Baird Smith LLP. So that there will always be full and open communication between us, and so that we may clearly understand and promptly deal with any concerns a client may have about our services, any questions concerning a particular invoice or about our legal services should be raised within thirty (30) days of the date of the invoice or the occurrence of the event which causes you concern.

THE PROVISION OF LEGAL SERVICES

Customarily, each client of Clark Baird Smith LLP is served by a principal lawyer contact. The principal lawyer should be someone in whom you have confidence and with whom you enjoy working. You are free to request a change of principal lawyer at any time. Clark Baird Smith LLP also may utilize other attorneys and paralegals in the Firm to work on a client's matters. These individuals operate under the supervision of the principal lawyer for the client. Such delegation may be for the purpose of involving lawyers or legal assistants with special expertise in each area or for the purpose of providing services on the most efficient and timely basis. Whenever practicable, we will advise our client of the names of those lawyers and legal assistants who work on the client's matters.

The retention of a lawyer does not ensure that the desired outcome will be achieved. Accordingly, Clark Baird Smith LLP cannot guarantee the results of its services. Rather, Clark Baird Smith LLP will always act on your behalf to the best of our ability and will provide competent representation to its clients. Competent representation requires the legal knowledge, skill, thoroughness and preparation necessary to handle the client's matters. Any expressions on our part regarding the outcome of our legal matters are expressions of our best professional judgment but are not guarantees. Such opinions are necessarily limited by our knowledge of the facts and are based on the state of the law at the time they are expressed.

YOUR RESPONSIBILITIES

We expect our clients to be actively involved with the matters we are handling for them, to participate in meetings and to provide whatever information and cooperation may be necessary. We also expect that the information we receive from our clients will be accurate and complete. If

a client does not cooperate with us or provides us with information which is incomplete or inaccurate, we reserve the right to withdraw as attorneys for that client.

MISCELLANEOUS

In connection with audits of a client's financial statements, Clark Baird Smith LLP may be requested from time to time to furnish certain information or to confirm information. By engaging us, you are authorizing us to respond to such requests in a reasonable manner and to furnish such information as is consistent with reasonable requests from the auditors and the attorney-client privilege. Time spent responding to such requests will be charged at our regular rates.

Where we have been asked to represent more than one individual or entity in a matter, the Rules of Professional Conduct promulgated by the Illinois Supreme Court require us to disclose that representation of multiple clients is permitted so long as the clients do not have directly adverse interests. However, we may not represent multiple clients if the representation of one or more of those clients may be materially limited by the Firm's responsibilities to another client or to a third person, or by the Firm's or a lawyer's own interests. More simply stated, we can represent multiple parties in a matter so long as each party has similar interests. At such time as those interests diverge, we may no longer be able to represent any of the affected clients. If the matter which is the subject of the engagement letter involves the representation of multiple clients or entities, the execution and delivery of the engagement letter to Clark Baird Smith LLP, by each client is an acknowledgement that the clients have similar interests and that each consents to our representation of the other clients. In addition, where representing multiple clients or parties, unless otherwise agreed in writing by Clark Baird Smith LLP, the clients are jointly and severally obligated with respect to the payment of our invoices.

Internal Revenue Service regulations require that certain types of written advice include a disclaimer. To the extent that the engagement letter or these Terms of Engagement for Legal Services contain written advice relating to a Federal tax issue, the written advice is not intended nor written to be used and cannot be used by the recipient or any other taxpayer for the purposes of avoiding Federal tax penalties or to support the promotion or marketing of the transaction or matters discussed herein.

TERMINATION

You may terminate our representation at any time, with or without cause, by notifying us. Your termination of our services will not affect your responsibility for payment of legal services rendered and additional charges incurred before termination and in connection with an orderly transition of the matter.

We are subject to the rules of professional responsibility for the jurisdictions in which we practice, which list several types of conduct or circumstances that require or allow us to withdraw from representing a client, including for example nonpayment of fees or costs, misrepresentation or failure to disclose material facts, action contrary to our advice, and conflicts of interest with another client. We try to identify in advance and discuss with our clients any situation which may

lead to our withdrawal and, if withdrawal ever becomes necessary, we give the client written notice of our withdrawal.

Except for original corporate records or any records or files which we receive from you or third parties with the understanding that they belong to you, it is agreed that all of our files, copies of documents, correspondence or other materials which we may accumulate in connection with our representation of you, including copies of materials filed with any regulatory agency, shall be the property of Clark Baird Smith LLP. You may have copies at any time during our representation of you. Upon the termination of the engagement and upon request, we will return your property to you within thirty (30) days of such termination. However, it is specifically agreed that we have the right to dispose of our files at such time as we determine that such files no longer need to be retained. After disposal, these materials will no longer be available.

Your agreement to this engagement constitutes your acceptance of the foregoing terms and conditions as well as any additional terms and conditions set forth in the accompanying engagement letter. If any of them is unacceptable to you, please advise us now so that we can resolve any differences and proceed with a clear, complete, and consistent understanding of our relationship.

MEMORANDUM

To: Village Board of Trustees
From: Village Manager Cara Pavlicek
Date: 2026-07-14
Subject: A Motion to Accept Receipt of the Village Communications Plan

Overview

The Board will receive the Village Communications Plan which was developed the Village's consultant (a5 Branding and Digital).

Fiscal Impact

N/A.

Recommendation

Approval.

Strategic Priority

Connected Community: Deliver proactive and open communication and engagement in Village business and services to advance knowledge, participation, and belonging.

Background

a5 Branding and Digital presented and discussed the Communications Plan with the Village Board at the August 12, 2025, April 14, 2026 and June 23, 2026 Committees of the Whole. At these meetings, a5 discussed the recommended document to establish final Board consensus in order to seek Board acceptance of the Plan as early as the July 14, 2026 Regular meeting of the Village Board. As part of the Plan's development, a5 conducted individual stakeholder interviews, focus groups and participated in the public outreach process for the Strategic Plan with BerryDunn to ensure feedback gathered as part of that process was considered as well.

The Village engaged a5 Branding and Digital to audit Village communications and prepare a plan for improvements in conjunction with the Village's new Strategic Plan. The intent is to improve coordination across platforms including the Village's website, email, print, and social media along with tactical execution that elevates day-to-day communications.

The Village previously worked with a5 - a design-driven communications and marketing firm specializing in strategic messaging, stakeholder engagement, and brand development - to conduct a review of Village communication tools and develop and update the website, weekly E-news, and print newsletter (2019) as well as the Village brand (2022). Given their knowledge of the Village of Northbrook, it was recommended the Village engage a5 to undertake the following work on strategy and structure to include:

- Communications audit and plan
- Message platform (voice, tone, framework)
- Key Performance Indicators (KPI) & evaluation framework
- Strategic Plan alignment
- Staff/Board training & coaching

Staff will be in attendance at the meeting to respond to any questions.

Northbrook Communications Plan (Final)

Overview

In 2025, the Village of Northbrook engaged a5 Branding & Digital to conduct a Communications Audit. The intent was to assess Northbrook's current communications and those of its peers in order to build a consistent, resident-centered communications approach that aligns with the visual and verbal architecture of the Village's brand, and complements the Village's Strategic Plan.

This Communications Plan translates the findings of that audit into a structured, actionable system for how the Village of Northbrook communicates with its residents, businesses and stakeholders. It treats communications as a core Village function that clarifies internal communications management and external engagement with residents, businesses and stakeholders.

Communications as a Core Village Function

Communications is a core service that enables the Village to:

- Deliver on Strategic Plan priorities and demonstrate progress
- Build trust and transparency with residents and businesses
- Support resident understanding of decisions, services and investments
- Strengthen community connection, participation and confidence in Village leadership

Effective communication ensures residents receive and understand information and how it impacts them and how they can use it. This plan moves the Village from reactive updates to proactive, predictable communication that shapes the narrative; moves from a formal institutional tone to a clear, accessible, human voice; streamlines information flow from fragmented departmental messaging to coordinated messaging across the entire Village organization.

The standard moves from "we sent it" to "stakeholders get it."

Vision, Principles and Goals

Communications Vision. Northbrook will communicate in a way that is proactive and timely, clear and easy to understand, consistent across all channels and accessible to every resident. Communications will reflect the people, services and character of Northbrook, and will help residents understand how the Village operates, the decisions that are being made and how they can meaningfully participate. Communications is how Village strategy connects with and reaches residents.

Guiding Principles — The Three Ps. Every Village communication is evaluated against three principles:

- **Proactivity**: Communicate early and consistently. Lead the narrative, not react to it.
- **Positivity:** Celebrate services, staff, investments and community life. Help residents see the value of what they receive every day.
- **Personality**: Communicate with a distinct, human voice that reflects the character and warmth of Northbrook.

Goals. This plan is designed to achieve five core goals:

- Improve resident understanding of Village services and decisions
- Deliver more proactive, coordinated and story-driven communication across all channels
- Strengthen community trust through transparency, consistency and accessibility
- Increase resident engagement across digital, in-person and notification channels
- Align all communications with the Village's Strategic Plan priorities and organizational mission

Alignment with the Strategic Plan

Every element of this Communications Plan is designed to directly support the Village's Strategic Plan. Communications is how Village strategy connects with residents.

The five priorities of the Strategic Plan become the five pillars of the Communications Plan, with signature tactics and initiatives contained within each.

The Strategic Plan defines what the Village will do.

The Communications Plan defines how residents will understand and experience it.

The Five Pillars at a Glance

Pillar	Focus	Result
1. Connected Community	Resident engagement; two-way communication; understanding of Village operations	Residents understand how the Village operates and how to participate
2. Public & Community Safety	Education, awareness, preparedness; timely alerts; trust through transparency	Residents feel informed and prepared; trust the Village to communicate clearly
3. Economic Vitality	Storytelling; business visibility; development transparency; community pride	Northbrook is seen as a vibrant, business-friendly, welcoming community
4. Infrastructure	Explaining investments; project transparency; long-term capital visibility	Residents understand what is being invested in, why it matters, and when
5. Organizational Excellence	Internal coordination; ownership and governance; staff and trustee capacity	The Village communicates as one coordinated organization with one voice

Each pillar carries a defined set of signature tactics and initiatives. These initiatives are how the pillar moves from intent into the resident experience.

The Five Pillars in Detail

Pillar 1 | Connected Community

Deliver proactive and open communication and engagement in Village business and services to advance knowledge, participation and belonging. This pillar focuses on building the everyday conduits — the calendar, the newsletter, the in-person forums — that turn residents from recipients of information into participants in community life.

Tactics and initiatives:

- Northbrook Messaging Calendar: an internal editorial calendar that unifies proactive communication across departments and leadership
- Northbrook News + Voice Redesign: new frequency, editorial structure, and recurring features across print and digital

- Village Manager Weekly Report: a recurring operational document that informs downstream content
- In-Person Engagement Forums: structured informal community meetings with elected officials
- Civic Academy: a citizen-government education program modeled on the citizen police academy format, designed to help residents understand how local government works, how decisions are made, and how to engage meaningfully with Village processes and leadership — delivered through structured cohort sessions and evergreen digital content
- Neighborhood Outreach Program: connecting with willing citizens and existing neighborhood and local organizations to share accurate Village information and direct community members to official Village channels

Pillar 2 | Public & Community Safety

Provide public and community safety through education, prevention, and aligning resources with community needs. The objective is to provide timely information to residents and ensure they trust the Village's voice.

Tactics and initiatives:

- Northbrook Notify: maintained as the Village's crisis communications and emergency alerts channel, ensuring residents can trust the system to deliver timely, critical information when it matters most. Expansion of scope and channel structure for non-emergency content to be evaluated separately as the Village's digital communications capabilities grow.
- Emergency Preparedness Communications: proactive outreach on resources, protocols, and what to expect
- Public Safety Content Calendar: recurring education on prevention, infrastructure alerts, and seasonal preparedness
- Crisis Communications Protocol: a Village-wide framework within the Emergency Operating Plan

Pillar 3 | Economic Vitality

Promote Northbrook as a thriving community and economic leader. This pillar elevates community storytelling and brings consistency to how the Village communicates about businesses, development and the character that draws people here.

Tactics and initiatives:

- Community Development + Infrastructure Hub: development of a publicly accessible, map-based platform that brings together development, public works and real estate activity across the built environment — organized by project type and supported by templated collateral for consistent, intuitive resident access
- Community Identity + Destination Storytelling: campaigns reinforcing pride and external visibility
- Downtown + Commercial Corridor Promotion: structured visibility for local businesses across Village channels
- Development Education: educational primers on tools such as TIF, economic incentives, and housing typologies

Pillar 4 | Infrastructure

Maintain a consistent high quality of life through capital investment, continued focus on sustainability, and facilities that meet operational needs. Residents who understand what the Village is investing in, and why, become advocates for that investment.

Tactics and initiatives:

- Per-Project Communications Plans: every major capital and infrastructure project gets a dedicated communications approach, feeding into the Community Development + Infrastructure Hub for consistent public-facing visibility
- Capital Investment Transparency Report: an annual "state of infrastructure" communication
- Construction-Phase Resident Communications: proactive, direct outreach before and during active work
- Infrastructure Education Content: recurring content explaining cost, prioritization, purpose, and impact

Pillar 5 — Organizational Excellence

Foster a high-performing, supportive, and innovative culture where everyone contributes to the delivery of exceptional services for both internal and external customers.

Tactics and initiatives:

- Communications Guidance for Staff + Trustees: templated communications guidance, FAQs, and visual explainers for high-profile topics, enabling clear, consistent messaging from every spokesperson in both formal and informal communications
- Branded Engagement Templates: standardized tools for on-brand fliers, alerts, and social posts across departments

- Communications Governance Model: defined ownership, workflows, and accountability for every channel
- Staffing + Capacity Plan: right-sizing the communications function to match the ambition of this plan

Website and Digital Hub

The Village's website currently serves too many functions and serves none of them fully. With ADA compliance requiring rebuild or significant improvements by April 2027, this is the moment to rethink the digital foundation.

The rebuild is an opportunity to deliver:

- A resident-centered information hub for the most relevant and searched-for information
- Clear pathways to services, news, alerts and engagement
- Integration with Northbrook Notify, social media and the e-newsletter
- Content integration with Northbrook News + Voice
- A structure that feeds content efficiently to all downstream channels

The rebuild is also the opportunity to align internal channels and intranet activities (Office 365, SharePoint) so that cross-department communications run seamlessly.

The approach is to apply a *"one story, multiple platforms"* methodology: for example, a single piece of content adapted for the website, social media, the print newsletter and the email newsletter. It is published once, and experienced everywhere.

Governance

Communication functions best when everyone in the system knows their role. The plan defines five layers of responsibility:

- **Board of Trustees.** Sets strategic direction; reinforces official messaging; provides direct touchpoints with constituents.
- **Village Manager + Senior Leadership.** Owns the communications strategy; ensures departmental alignment; approves major messaging.
- **Communications Team.** Day-to-day execution: messaging calendar, channels, content production, brand consistency.
- **Village Departments.** Submit to the messaging calendar; use shared templates; follow established protocols.
- **Residents + Community.** Interact with proactive, timely, consistent, and accessible communications across all channels.

The Communications Governance Model formalizes this structure. Content flows from departments to the Communications Director, who writes, designs and curates with the team. The Village Manager or Deputy Village Manager reviews and approves before content is published, monitored and responded to across the Village's channels such as print newsletter, annual reports, Northbrook Notify, Manager's Weekly Report, social media, Northbrook News and press releases, NCTV, lobby monitors, water bill inserts, flyers and posters, and the website.

Implementation Roadmap

The phases outlined below represent the recommended sequence for plan implementation. Following Board adoption, timelines and priorities may be revisited in conjunction with the onboarding of a new communications director, who will evaluate staffing, capacity and operational sequencing in alignment with Village priorities.

Kick Off (30 days, internal preparation).

Phase One — Foundations (Months 1–3).

- Connected Community: Launch the messaging calendar; brief departments on submission cadence and monthly themes; conduct statistically valid citizen survey; launch in-person engagement forums; activate the Neighborhood Outreach Program with initial outreach to willing citizens and existing neighborhood and local organizations
- Public Safety and Trust: Audit the Northbrook Notify subscriber base; strengthen the system as the Village's primary emergency and crisis communications channel; develop and launch the SMS opt-in promotional campaign
- Economic Vitality: Develop the editorial brief and recurring feature framework for the Northbrook News + Voice + Manager’s Weekly redesign
- Infrastructure: Build the per-project communications template
- Organizational Excellence: Define the governance structure; assign communications roles; design staff and trustee toolkits
- Website: Develop the website RFP brief and vendor scope; complete home page refinements

Phase Two — Build (Months 4–9).

- Launch the refreshed Northbrook News + Voice; deepen Neighborhood Outreach Program partnerships and expand community contacts; advance Civic Academy planning and cohort development

- Strengthen Northbrook Notify as the Village's primary emergency and crisis communications channel; deploy the public safety content calendar; complete the crisis communications protocol
- Launch the Community Development + Infrastructure Hub; begin community identity and destination storytelling; promote Downtown businesses across Village channels
- Roll out project communications across all active development work
- Roll out Board Communication Guidance and trustee toolkits; launch branded engagement templates for all departments
- Complete vendor selection; begin redesign and content architecture for the new website

Phase Three — Scale (Months 10–18).

- Launch Civic Academy inaugural cohort; expand the Neighborhood Outreach Program reach and deepen organizational partnerships
- Conduct the annual preparedness and awareness survey; evaluate potential expansion of SMS communications for non-emergency content through dedicated separate channels
- Full brand integration across print and digital channels; launch the annual business promotion calendar; Community Development + Infrastructure Hub fully operational with all active built environment projects integrated
- Infrastructure education content series fully active; publish Year 2 capital investment report
- Conduct the annual internal communications audit; complete plan adjustments based on measurement data
- Launch the new website; integrate with Northbrook Notify, e-newsletter, and social channels; train staff content editors

Measuring Success

The plan succeeds when residents say it does. Progress is measured across four lenses:

- **Resident Understanding.** Statistically valid citizen survey, conducted every other year: do residents know what the Village is doing and why?
- **Channel Engagement.** Newsletter open rates and subscriber growth; Notify subscriptions; website traffic; social reach and engagement
- **Resident Trust and Satisfaction.** Statistically valid citizen survey, conducted every other year: confidence in Village transparency, responsiveness, and communications quality

- **Internal Consistency.** Survey of employees: is the messaging calendar in use? Are templates being adopted? Is governance functioning? Do employees know about activities they are not directly involved in?

Plan Adoption

The Communications Plan is in concert with and complements the implementation of the Village's Strategic Plan.

The Communications Plan establishes Northbrook's communications vision, principles, five pillars, governance structure, 18-month roadmap and measures of success.

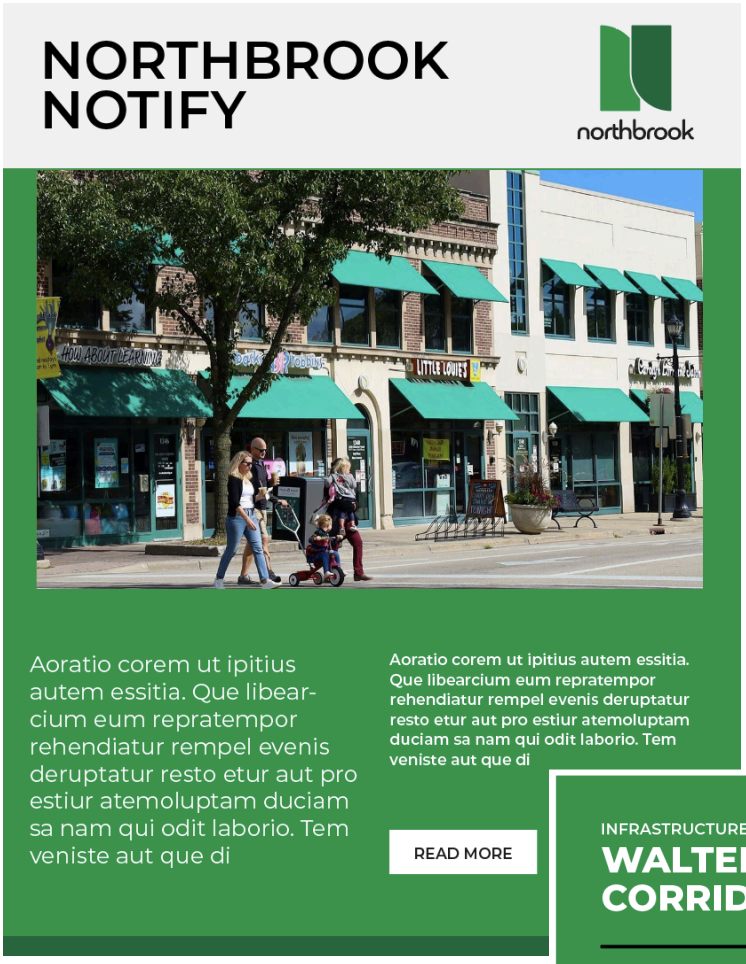

Example:
Outbound Safety Notification Collateral

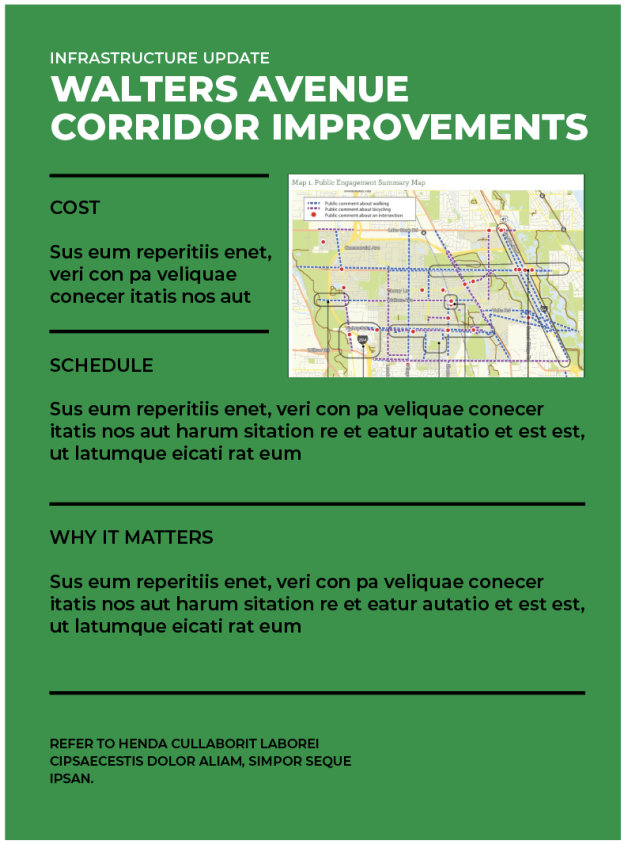

Example:
Outbound Development Collateral

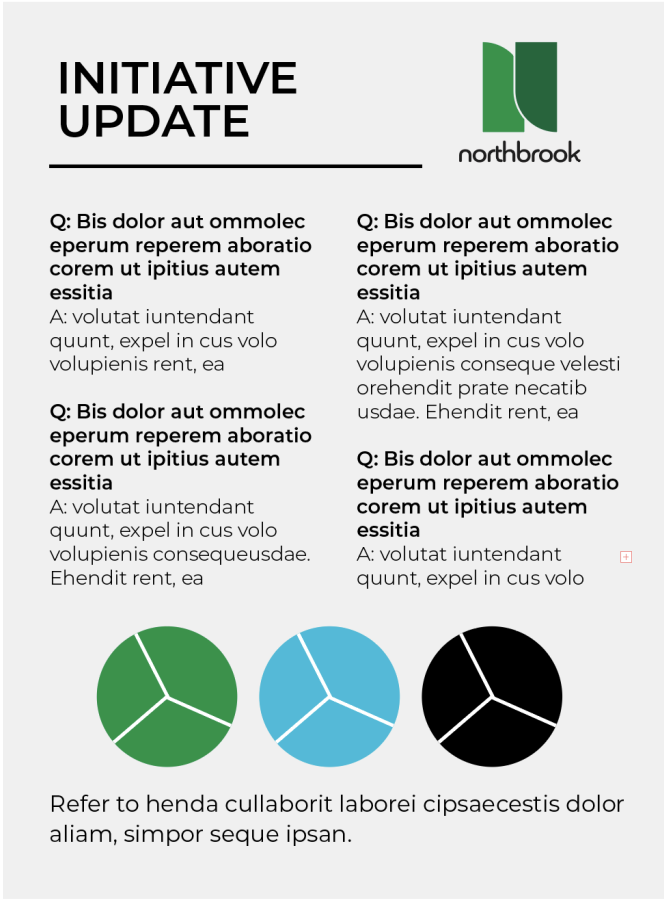

Example:
Communications Guidance for Staff and Trustees

Tasks Assignments/Ownership

	Board	Staff
Pillar 1 Connected Community	EXT In-person forums EXT Neighborhood ambassador program EXT Northbrook University (Civic Education)	EXT Messaging calendar EXT Northbrook News + Voice Redesign
Pillar 2 Public & Community Safety	EXT Northbrook Notify SMS expansion INT Crisis communications protocol	EXT Emergency preparedness communications EXT Public safety content calendar
Pillar 3 Economic Vitality/Thriving Community	INT Development Dashboard	EXT Community identity campaigns EXT Downtown + commercial corridor promotion
Pillar 4 Infrastructure	INT Per-project communications plans EXT Capital investment transparency reporting	EXT Construction-phase resident outreach EXT Infrastructure education content
Pillar 5 Organizational Excellence	INT Communications governance model INT Staffing structure + defined roles EXT Response toolkits for staff + trustees	EXT Response toolkits for staff + trustees EXT Branded engagement templates

TAX INCREMENT FINANCING IN NORTHBROOK

Reinvesting in the Village, without raising taxes.

northbrook

The Basics

TIF is an economic development tool that helps the Village support redevelopment in areas that would not otherwise attract new private investment. Inside a TIF district, the new property tax revenue created by redevelopment is reinvested back into that same district, funding public improvements.

How It Works

The base is frozen. When the Village Board designates a TIF district, the property tax value within it is locked in at its current base level. Schools, the county, the park district, the library, and every other taxing body continues to receive its share of that base for the life of the district.

New value creates the increment. As redevelopment occurs and property values rise above the frozen base, the difference — the increment — flows into a special Village fund.

The increment is reinvested. Those funds pay for eligible public improvements within the district. A TIF can operate for up to 23 years; many end earlier. When it ends, the full, expanded tax base flows back to every taxing body at a level much higher than it was before.

Common Questions

Q: Will my property taxes go up because of TIF?
A: No. TIF does not change your property tax rate. The Village, the schools, and the other taxing bodies on your bill set their own rates independently of any TIF district.

Q: What happens to the schools while a TIF is in place?
A: Schools and every other taxing body continue to receive property taxes at the base value throughout the life of the district. When the TIF ends, they receive the full benefit of the expanded tax base, including the new value that wouldn't have existed without the redevelopment that TIF helped make possible.

Q: How does the Village decide where to create a TIF?
A: Illinois law sets the bar. An area has to qualify typically by demonstrating conditions of disinvestment, and the redevelopment has to meet the "but for" test, meaning it wouldn't happen without the tool. The Redevelopment Plan is made public at least 45 days before a public hearing. It is reviewed by a Joint Review Board representing all affected taxing bodies (including a community representative), discussed in public, and adopted by the elected Village Board. No state or federal approval is required, but every step is on the record.

Q: How do I weigh in or learn more?
A: Residents can join the Interested Parties Registry for any district to receive notices directly. Public hearings happen before adoption. Joint Review Board meetings happen annually. Annual reports are filed with both the Village and the State Comptroller. Everything lives on the Village's TIF page.

Q: Does TIF mean the Village is borrowing money?
A: Not necessarily. The Board may choose to issue bonds backed by the future increment, or it may simply spend from the increment as it accumulates. Designating a district does not, by itself, create debt.

TIFs in Northbrook

Northbrook uses TIF deliberately and sparingly. The Village currently administers one active TIF district and has retired two others. Each district has a defined purpose, a public adoption process, and a clear end date. A complete record of current and historical districts, including ordinances, redevelopment plans, and annual reports, is available at northbrook.il.us/TIF.

Learn More

Full TIF information:
northbrook.il.us/TIF

Development and Planning Services Department:
[staff name, title, phone, email]

Website Adjustment



Docusign Envelope ID: 1A59F7D0-ABD1-8DE5-81CF-AC46D1782CAD

Quote Number: Q42105-6
July 9, 2026

First Amendment to CSA 10312

VILLAGE OF NORTHBROOK

Program Overview

Connect is Bigbelly's turnkey smart city solution which delivers a connected smart waste and recycling platform and provides Customers with a partner to help deploy, manage, and optimize their customized solution over a 48-month term. This subscription-based service was designed to deliver a flexible, scalable, smart platform that transforms waste operations today, and enables Customers to benefit from the technology innovations of the future.

Connect Renewal 48 Month Term

System Software

- CLEAN Management Console Licenses for Full Term
- CLEAN Mobile Software Licenses for Full Term

Automated System Monitoring

- Automated System Diagnostics and Alerts

Equipment/Hardware

- Custom Configuration as Detailed Below

Cleaning and Inspection

- Annual Comprehensive Station Cleaning
- Annual Station Inspection

Customer Support

- Customer Support Hotline and trained field service professionals

Warranty

- Hardware Parts Warranty for Full Term
- Expanded Warranty Coverage for Battery End-of-Life Replacement and Network Communication Upgrades for Full Term

Equipment/Hardware Configuration

10	Smart/Smart Double Station with Messgae Panels
3	Smart Max/Smart Double Station with Message Panels

Contract Start Date: 7/14/2026
Contract End Date: 7/9/2030

Serial Numbers Covered via Renewal:
500005620,500005621,500005956,501001018,501001019,501001020,501001021,501001022,501001023,501001024,
501001025,501001026,501001027,502001290,502001291,502001292,502001293,502001294,502001295,502001296,
502001297,502001298,502001299,502001300,502001301,502001302

Total Monthly System Cost	$1,845.65

[1]Pricing is valid for 30 days from July 9, 2026.
[2]Sales Tax is NOT included in above pricing.
[3]Pricing is subject to Connect Program Terms and Conditions.

The Connect Services for the Renewal which the Customer is purchasing pursuant to this Quote shall be governed by the Connect Services Agreement No. 10312 between Bigbelly and the Customer dated as of February 27, 2023, for the Initial Term and any Renewal Term. Notwithstanding the above, Parties agree that upon expiration of this First Amendment Renewal Term, Bigbelly will de-install and remove the above-mentioned Equipment at no cost to the Customer.

ACCEPTED AND AGREED BY:

BIGBELLY

Signed by:
By: Eric Hunt Jr
856DC686D330484...
Print Name: Eric Hunt Jr
Title: VP Finance/Treasurer
Date: 7/9/2026

CUSTOMER

By: _____
Print Name: _____
Title: _____
Date: _____